APPROVED FOR PUBLIC RELEASE

ER1D098124

UNCLASSIFIED

LA--725

[redacted]

C3

CIC-14 REPORT COLLECTION
REPRODUCTION
COPY

LOS ALAMOS SCIENTIFIC LABORATORY

OF THE

UNIVERSITY OF CALIFORNIA

CONTRACT W-7405-ENG. 36 WITH

U. S. ATOMIC ENERGY COMMISSION

UNCLASSIFIED

30840

APPROVED FOR PUBLIC RELEASE

APPROVED FOR PUBLIC RELEASE

UNCLASSIFIED

THRESHOLDS FOR THE PHOTO-DISINTEGRATION OF Zr^{90}, Pr^{141}, As^{75}, I^{127}, Ni^{58}, AND La^{138}

ABSTRACT

The gamma-n thresholds of several elements have been determined using the 20 Mev betatron at Los Alamos by comparing the observed thresholds with the thresholds of N^{14} and F^{19}, where the threshold for the $N^{14}(\gamma,n)N^{13}$ reaction was taken as 10.54 Mev and the threshold for the $F^{19}(\gamma,n)F^{18}$ reaction was taken as 10.40 Mev. On this assumption the following values were obtained for the thresholds of the reactions quoted: $I^{127}(\gamma,n)I^{126}$ (9.45 ± 0.2 Mev), $Pr^{141}(\gamma,n)Pr^{140}$ (9.8 ± 0.3 Mev), $As^{75}(\gamma,n)As^{74}$ (10.3 ± 0.2 Mev), $Zr^{90}(\gamma,n)Zr^{89}$ (12.0 ± 0.2 Mev), $Ni^{58}(\gamma,n)N^{57}$ (11.7 ± 0.2 Mev), $La^{138}(\gamma,n)La^{137}$ (12.9 ± 0.4 Mev).

UNCLASSIFIED

APPROVED FOR PUBLIC RELEASE

APPROVED FOR PUBLIC RELEASE

Introduction

This is to report the determination of several gamma-neutron thresholds as measured with the 20 Mev betatron at Los Alamos. The thresholds measured are those of zirconium^{90}, praseodymium^{141}, arsenic^{75}, iodine^{127}, nickel^{58}, and lanthanum^{138}. In the process of energy calibration it was also necessary to run the thresholds of nitrogen^{14} and fluorine^{19}.

Method

In all cases it was possible to irradiate the element under investigation and observe the resultant activity. The total irradiation was in each case measured with a Victoreen R-thimble. The activity per Röentgen unit for a standard sample weight and counting geometry was then determined as a function of the maximum energy of the bremsstrahlung spectrum from the betatron. A plot of this data then yielded the threshold.

The maximum energy of the bremsstrahlung from the betatron was varied by varying the amplitude of the magnet oscillation. Expansion of the electrons from the equilibrium orbit always took place at the peak of the magnetic flux wave, thus reducing the energy errors due to uncertainty in the time of expansion. An automatic regulating circuit kept the magnet amplitude constant to 0.2 percent or better. The magnet amplitude, which was the measure of the maximum bremsstrahlung

APPROVED FOR PUBLIC RELEASE

APPROVED FOR PUBLIC RELEASE

energy, was observed by measuring the voltage picked up by two loops around the legs of the betatron magnet with a model 19 Hickok voltmeter.

Nitrogen

Observation of the reaction $N^{14}(\gamma,n)N^{13}$ (9.93 m) was used as a calibration point on the energy scale. The gamma-n threshold of N^{14} as calculated from the mass values given on Segre's isotope chart of May 1945 is 10.54 Mev. That value has been used throughout this work.

The nitrogen was irradiated in the form of the dicyandiamide. A cylindrical lucite holder with a ten mil inside wall and having a volume of approximately 33 cubic centimeters was used as a container for the dicyandiamide during both irradiation and counting. No appreciable activity was induced in the lucite holder. A drawing of the holder is given in Figs. 1a and 1b. Fig. 2 is a graph of the experimental results. The ordinate is the number of counts above background per R obtained between the first and eleventh minute after irradiation. The statistical probable error determined from the total number of counts is shown for each point in the graph. The threshold value obtained from the curve is 121.5 ± 0.8 volts.

Fluorine

Observation of the reaction $F^{19}(\gamma,n)F^{18}$ (112 m) was also used as a calibration point of the energy scale.

APPROVED FOR PUBLIC RELEASE

APPROVED FOR PUBLIC RELEASE

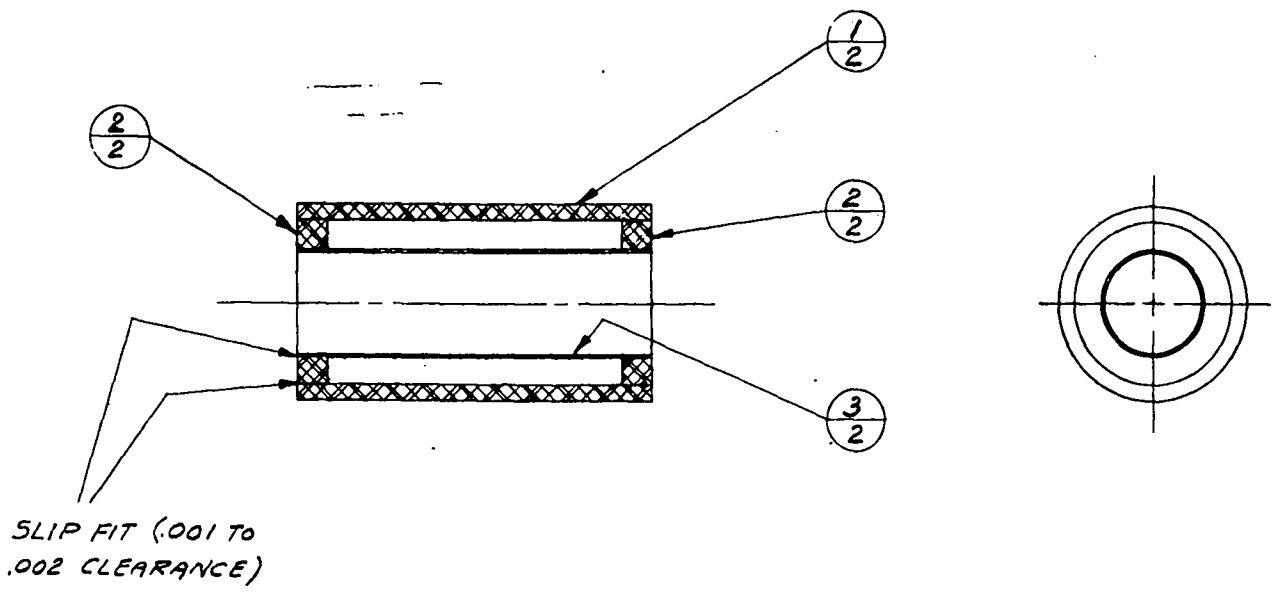

NOTE; TO BE ASSEMBLED BY USER. MUST BE FREE OF TOOL MARKS

Fig. 1 a

APPROVED FOR CONST.			REV. LET.	CHANGED ITEM WAS	BY	DATE
CHIEF ENG.	RJH	Dec. 16, 47				
CH. DRFTSMN.	L.H.	Dec. 16, 47	TITLE			
CHECKED	JRS	DEC 18-47	SAMPLE HOLDER			
DRAWN	U.S.	DEC 18-47	LUCITE SLEEVES AND SPACERS			
LAYOUT OR SKETCH						
GROUP P-11	REPRESENTATIVE OGLE		SCALE 1"=1"	DRAWING NO. 2Y50042 — 1	SHEET SIZE AND NO. B TOTAL 2	

FRACTIONAL TOLERANCE ± 1/64 UNLESS OTHERWISE NOTED.

APPROVED FOR PUBLIC RELEASE

APPROVED FOR PUBLIC RELEASE

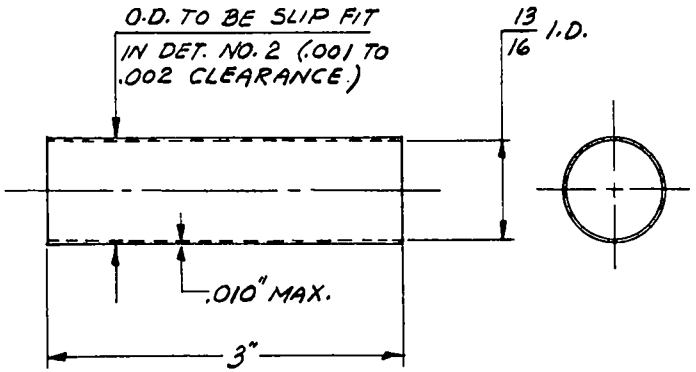

(3) 1 REQ'D. MAT'L. LUCITE

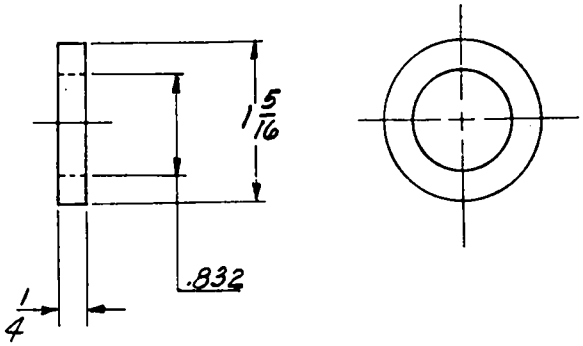

(2) 2 REQ'D. MAT'L. LUCITE

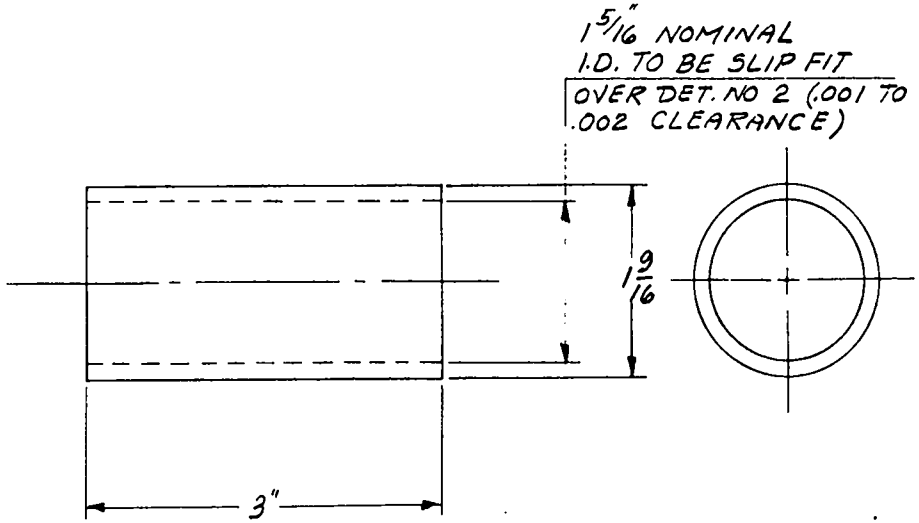

(1) 1 REQ'D. MAT'L. LUCITE

NOTE; ALL PIECES MUST BE FREE OF TOOL MARKS

Fig. 1 b

APPROVED FOR CONST.					
CHIEF ENG.		Dec 21 1947	REV. LET.	CHANGED ITEM WAS	BY / DAT
CH. DRFTSMN.	L. H.	Dec. 18, 47	TITLE		
CHECKED		8-47	SAMPLE HOLDER		
DRAWN	JAR.	DEC. 18-47	LUCITE SLEEVES AND SPACERS		
LAYOUT OR SKETCH			SCALE	DRAWING NO.	SHEET SIZE AND NO.
GROUP P-11	REPRESENTATIVE O.S.E		1" = 1"	2Y50042 — 2	TOTAL
FRACTIONAL TOLERANCE ± 1/64 UNLESS OTHERWISE NOTED.					

APPROVED FOR PUBLIC RELEASE

APPROVED FOR PUBLIC RELEASE

FIGURE 2
NITROGEN THRESHOLD CURVE

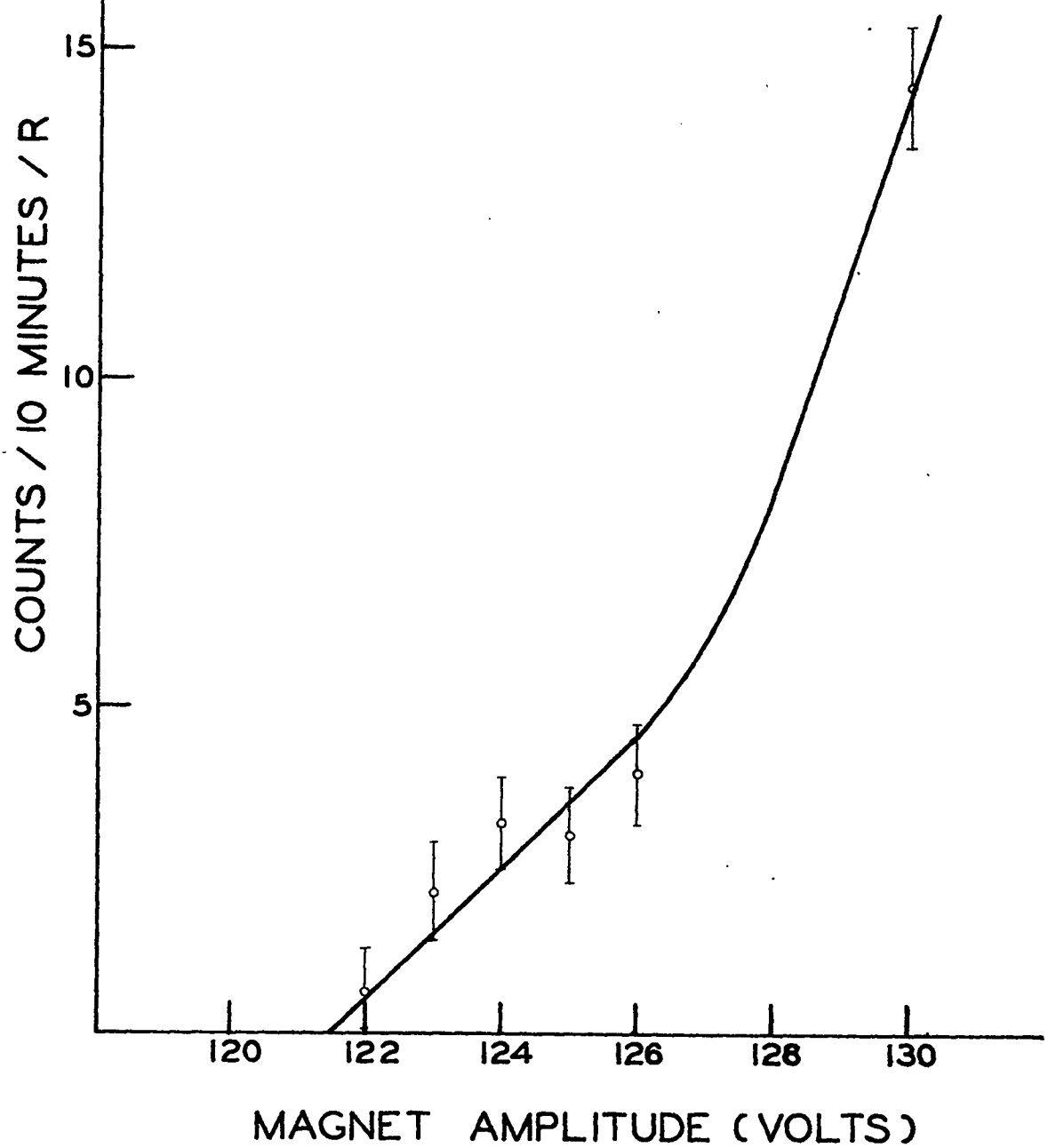

APPROVED FOR PUBLIC RELEASE

APPROVED FOR PUBLIC RELEASE

The gamma-n threshold of F^{19} as calculated from the mass values given on Segre's isotope chart of 1945 is 10.40 Mev.

Fluorine was irradiated in the form of LiF powder. The samples were in holders of the type shown in Fig. 1. Four-hour irradiations were necessary at the points below 125 volts amplitude. The resultant curve is shown in Fig. 3, where the ordinate is the initial counting rate above background per R corrected to a four-hour irradiation, and the abscissa is the magnet amplitude. The counting probable error is shown for each point.

The threshold value obtained from Fig. 3 is 119.2 ± 0.7 volts.

Energy Calibration Summary

The data of the nitrogen and fluorine thresholds are as follows:

	Energy	Amplitude	$H\rho$
Nitrogen	10.54 Mev	121.5 ± .8 volts	36824 gauss-cms
Fluorine	10.40	119.2 ± .7	36357

where $H\rho$ is the effective field at the electron orbit times the radius of the orbit at the time the bremsstrahlung are produced. These data then yield the calibration value of 1 volt = 304 ± 2 gauss-cm. The error given here represents only the uncertainty in drawing the threshold curves and assumes that the true excitation curve has no unobservable breaks close to the apparent threshold that would lead to an incorrect interpretation of the curve.

APPROVED FOR PUBLIC RELEASE

APPROVED FOR PUBLIC RELEASE

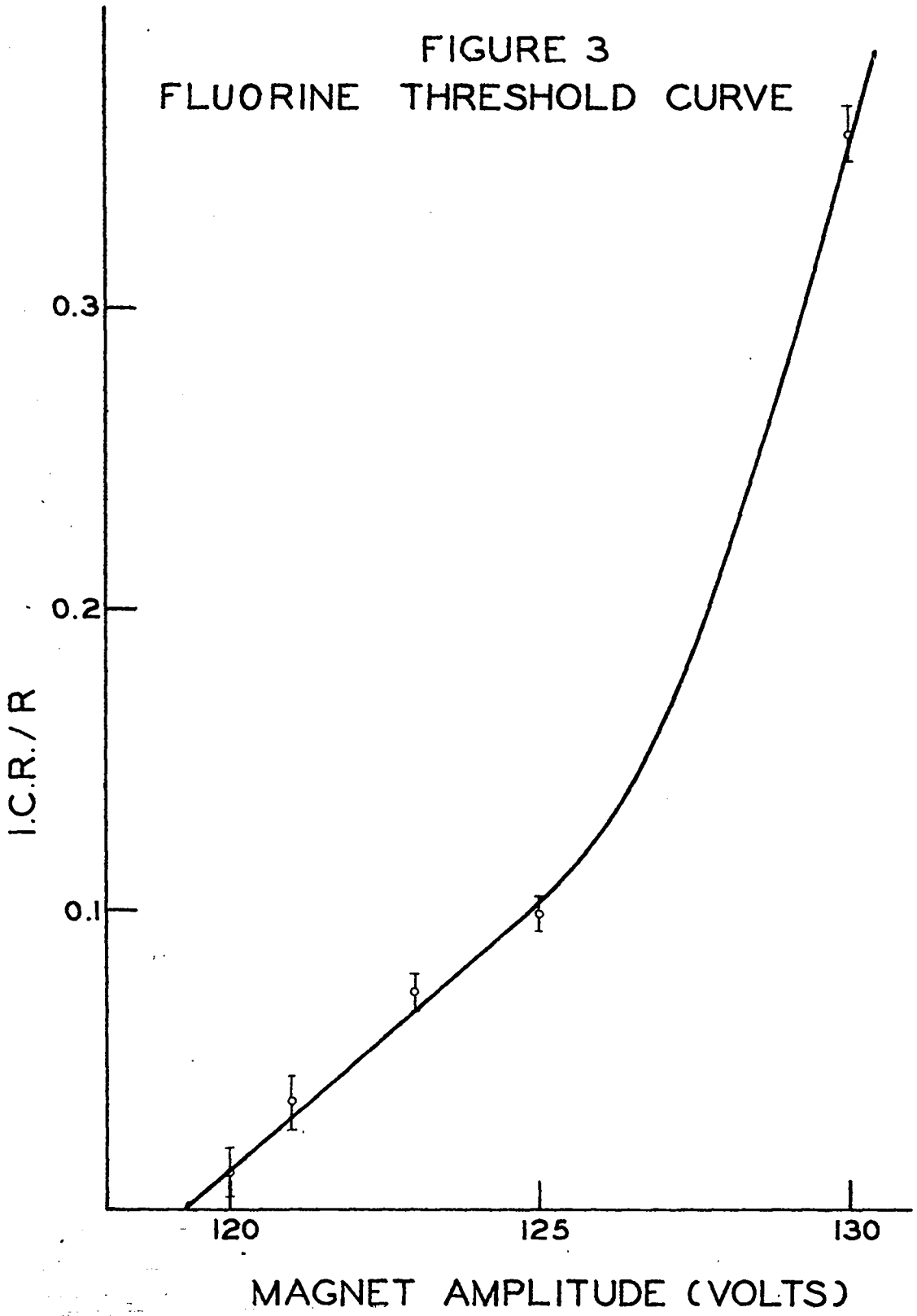

APPROVED FOR PUBLIC RELEASE

APPROVED FOR PUBLIC RELEASE

Iodine

Elemental iodine was irradiated and counted in holders such as that shown in Fig. 1. Each sample was counted until it was clear that the activity observed was the 13 day I^{126} due to the reaction $I^{127}(\gamma,n)I^{126}$. A plot of the observed data is shown in Fig. 4. The ordinate represents the initial counting rate of the sample divided by the total irradiation measured in Röentgen units, and the abscissa is the bremsstrahlung peak energy as determined from the above energy calibration. The errors shown on the plotted points are the counting probable errors. The threshold value is then taken as 9.45 ± 0.20 Mev, where the probable error quoted represents the errors in counting, in holding the energy constant during a run, and in energy calibration.

Praseodymium

Approximately two cubic centimeters of praseodymium trichloride were irradiated for ten minutes at various X-ray energies, then transferred to a porcelain dish and counted in a standard counting geometry. The expected period of 3.5 minutes was observed. The sample used had a natural background of approximately 40 counts per minute presumably due to some contaminant, possibly thorium. It was not always possible to put the sample in the counting dish with exactly the same geometry, and there was apparently some settling of the powder after it was in the dish so the initial counting

APPROVED FOR PUBLIC RELEASE

APPROVED FOR PUBLIC RELEASE

FIGURE 4
IODINE THRESHOLD CURVE

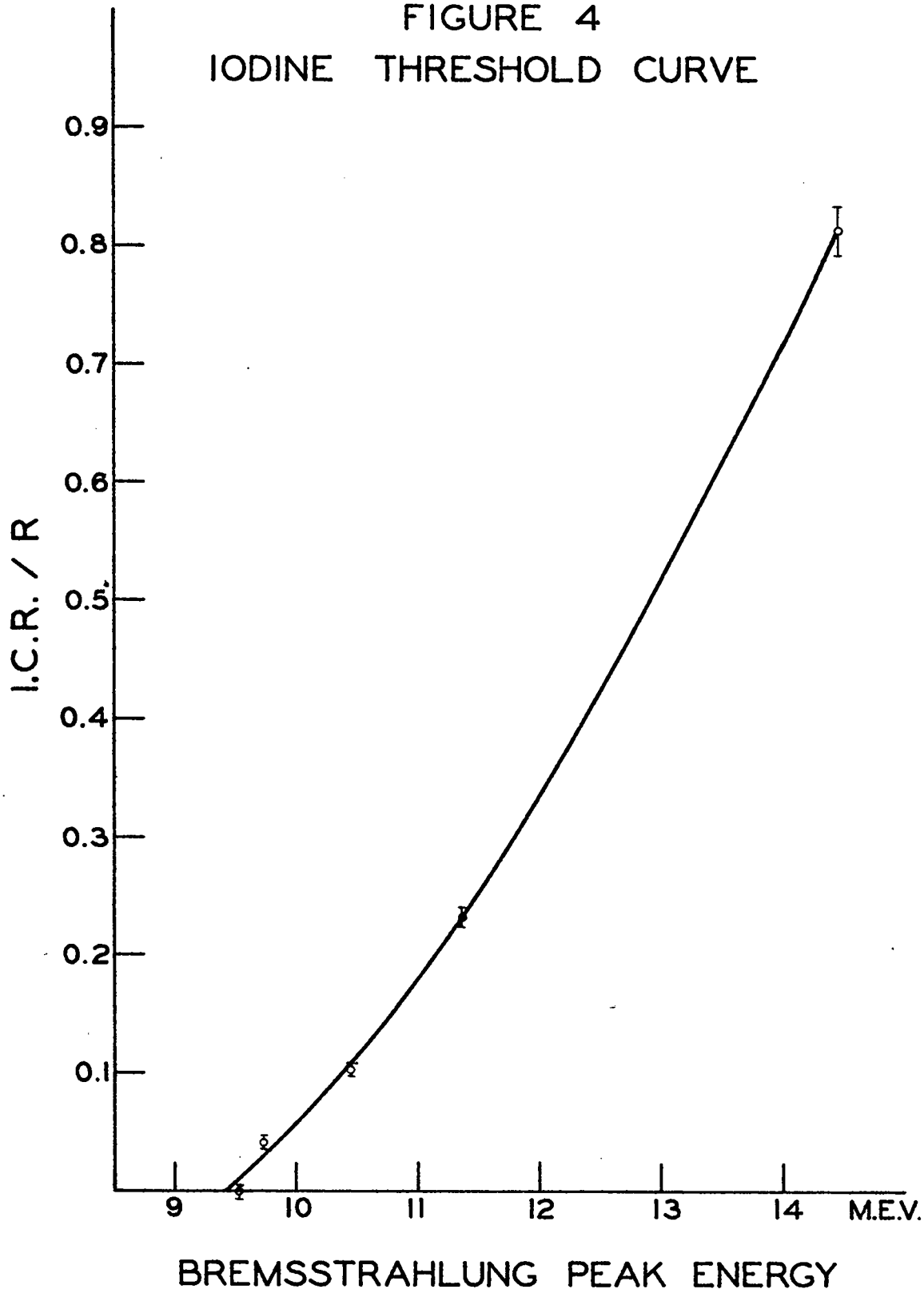

APPROVED FOR PUBLIC RELEASE

APPROVED FOR PUBLIC RELEASE

rate was sometimes uncertain by some five counts per minute. Because of this the relative errors near the threshold are quite large.

A graph of the data obtained is given in Fig. 5. The abscissa is the peak bremsstrahlung energy at which the sample was irradiated, and the ordinate is (I-B)/R, where I is the average counting rate between the first and fourth minute after irradiation, B is the counting rate after the 3.5 minute period had decayed to a negligible value, and R is the number of Röentgen units observed in a standard position during the run. The errors shown are the statistical counting probable errors. The threshold value for the reaction $Pr^{141}(\gamma,n)Pr^{140}$ obtained from the curve is 9.8 ± 0.3 Mev.

A measurement of the emanation from a very active praseodymium sample in a crude magnetic spectrometer gave the 3.5 minute positron period, showing that the above measurements were probably made on the correct isotope.

Arsenic

Pure arsenic metal was irradiated and counted in the lucite holders of Fig. 1. The decay of each sample was followed for twice the half-life (16 days) in order to be sure that the correct activity was being observed. The resultant threshold curve is shown in Fig. 6, where the ordinate is the initial counting rate of the sample minus the counter background divided by the irradiation as measured in

APPROVED FOR PUBLIC RELEASE

APPROVED FOR PUBLIC RELEASE

FIGURE 5
PRASEODYMIUM THRESHOLD CURVE

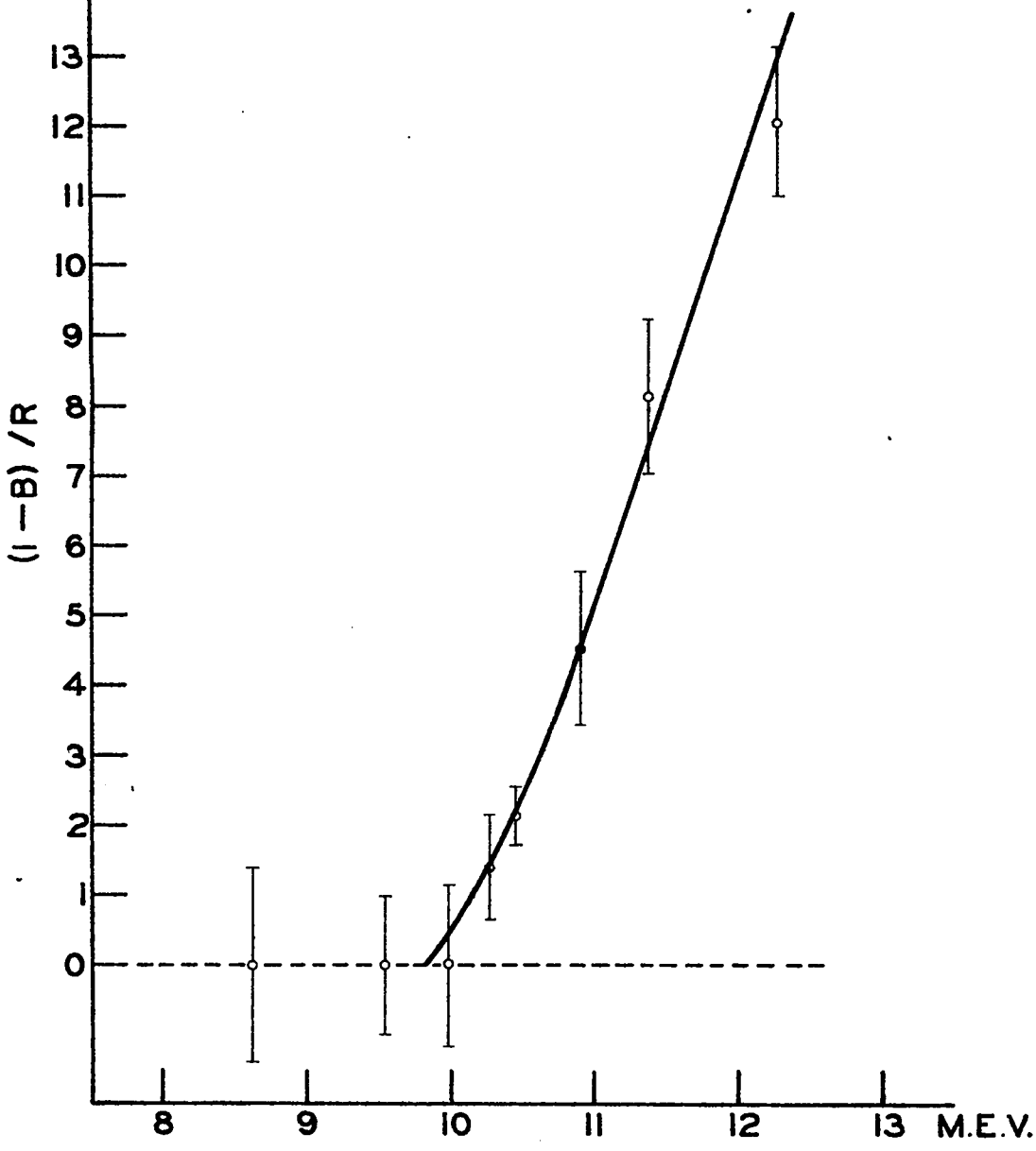

BREMSSTRAHLUNG PEAK ENERGY

APPROVED FOR PUBLIC RELEASE

APPROVED FOR PUBLIC RELEASE

FIGURE 6
ARSENIC THRESHOLD CURVE

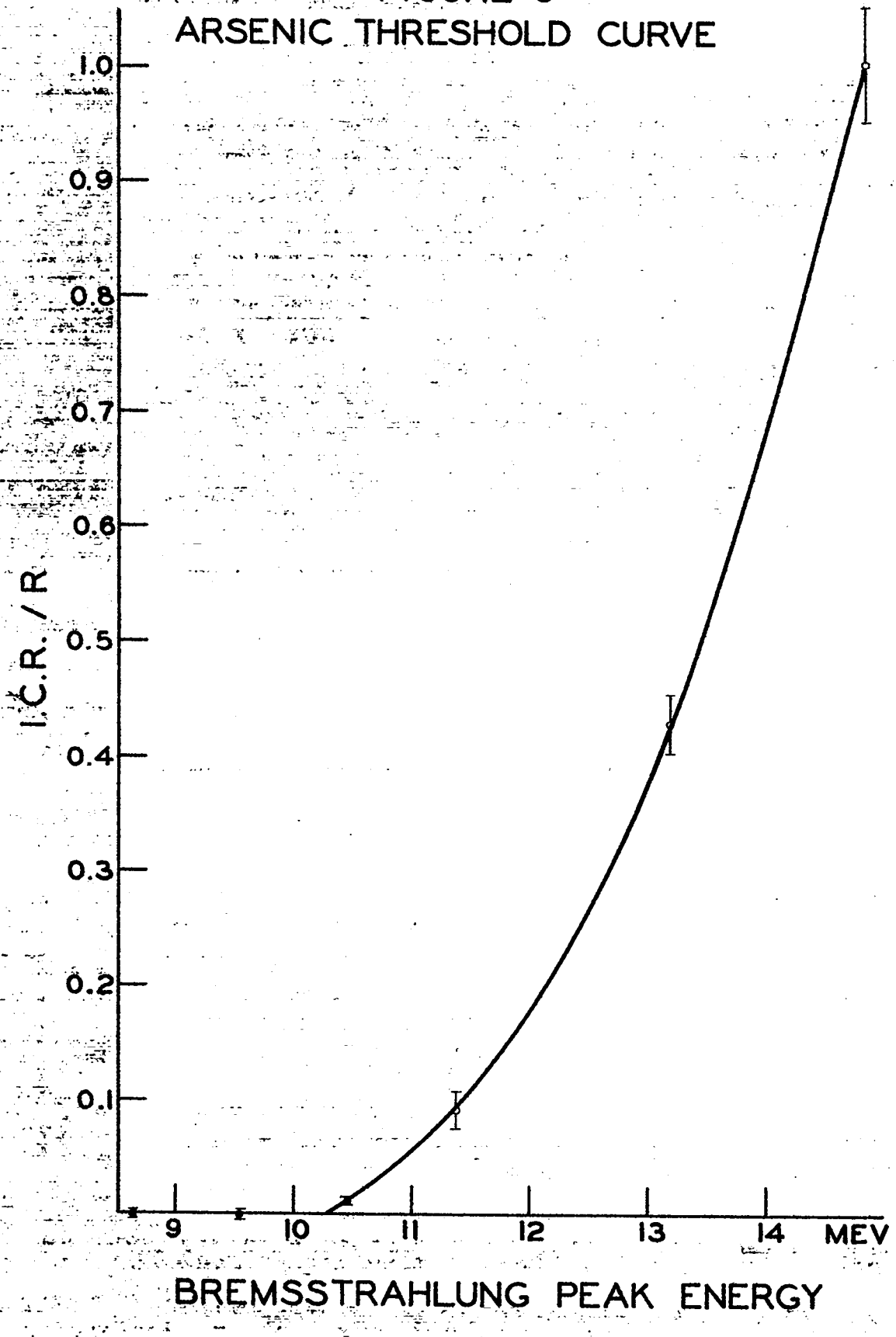

APPROVED FOR PUBLIC RELEASE

APPROVED FOR PUBLIC RELEASE

Röentgen units. The observed threshold for the reaction $As^{75}(\gamma,n)As^{74}$ (16 d) is 10.3 ± 0.2 Mev.

Zirconium

The reaction under consideration is $Zr^{90}(\gamma,n)Zr^{89}$. As pointed out on Segre's isotope chart of May 1945 there are two isomers of Zr^{89}, one with a 4.5 minute period, and the other with a 78 hour period. Both periods were observed during the course of this work.

Zirconium was irradiated in the form of a 5 mil foil 1" wide and 2-5/8" long. After irradiation the foil was wrapped around a standard glass walled Geiger tube and counted.

The resultant threshold curves are shown in Fig. 7. All samples were irradiated long enough to bring the 4.5 minute activity to saturation, and the yield was effectively constant for all runs, so for that curve the initial counting rate of the sample minus the background is shown as a function of the bremsstrahlung peak energy. However, the points shown on the 78 hour period curve represent irradiations varying in length from 20 minutes to 4 hours, so the initial counting rate times 500 divided by the irradiation as measured in Röentgen units is plotted. The ordinate scale then applies to both curves.

The gamma-n threshold obtained from the 4.5 minute period curve is 12.1 ± 0.1 Mev. That obtained from the 78 hour

APPROVED FOR PUBLIC RELEASE

APPROVED FOR PUBLIC RELEASE

FIGURE 7
ZIRCONIUM THRESHOLD CURVE

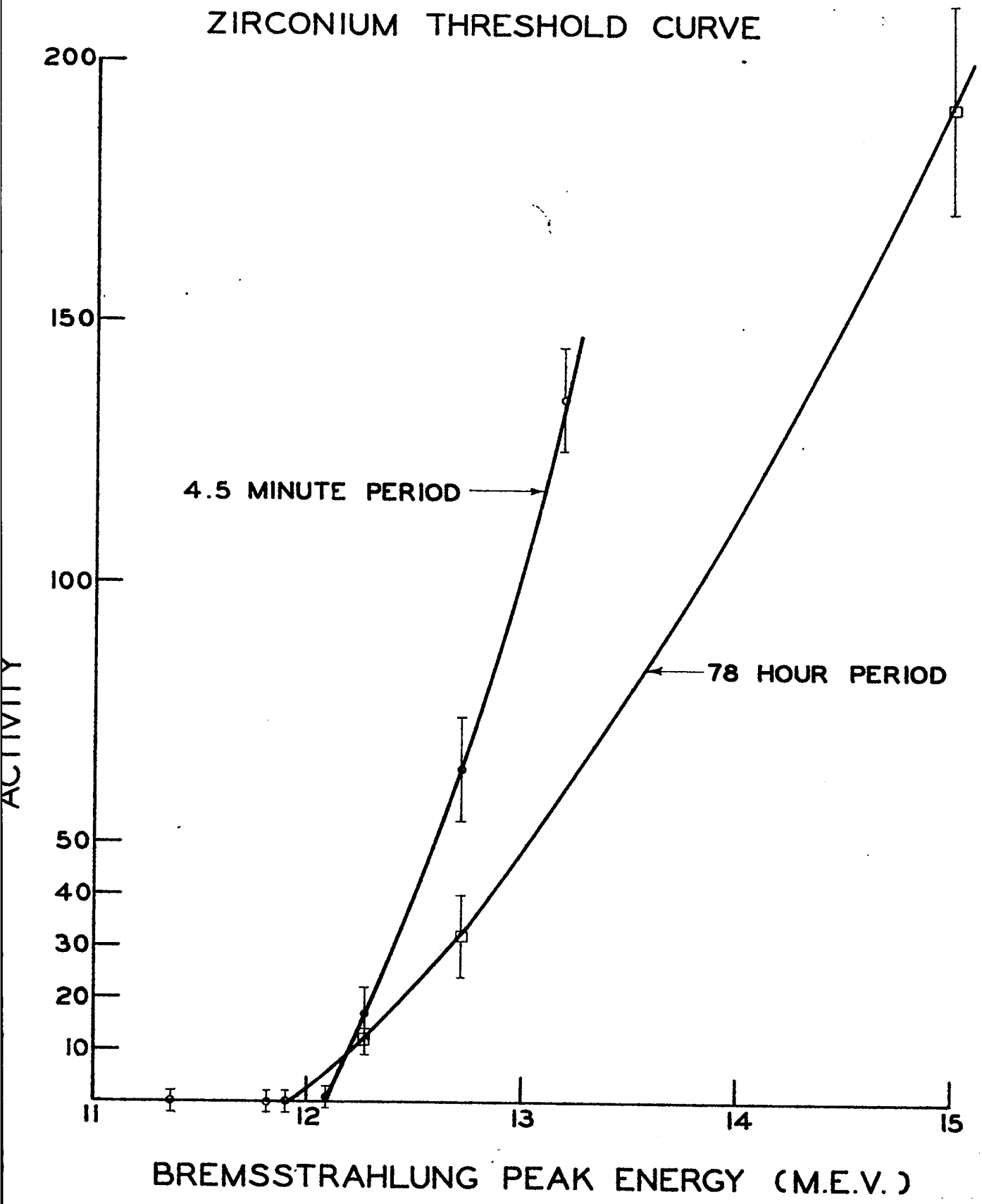

APPROVED FOR PUBLIC RELEASE

APPROVED FOR PUBLIC RELEASE

period curve is 11.9 ± 0.3 Mev. If the 4.5 minute period represents the decay by isomeric transition into the 78 hour isotope, one would expect the threshold observed by means of the 78 hour period to be somewhat less than that observed by means of the 4.5 minute period. However, since the errors quoted for the thresholds overlap, it is probably more logical to take 12.0 ± 0.2 Mev as a mean value for the gamma-n threshold of Zr^{90}.

Nickel

The nickel samples used for this measurement were in the form of three-inch long nickel cylinders of 20 mil wall thickness. The cylinders were of such a diameter as to just fit over the glass-walled Geiger tubes used for counting. Four hour irradiations were made for all points except the 11.58 Mev point, which gave no observable activity for an eight hour irradiation. After irradiation the samples were counted until the 36 hour period expected from the $Ni^{58}(\gamma,n)Ni^{57}$ reaction was definitely identified, usually for four half-lives. All samples exhibited a 2.6 hour period also, presumably due to the n-γ reaction on Ni^{62}.

The threshold curve obtained is shown in Fig. 8, where the ordinate represents the initial counting rate of the sample minus the counter background divided by the irradiation as measured in Roentgen units. The threshold value taken from the curve is 11.7 ± 0.2 Mev.

APPROVED FOR PUBLIC RELEASE

APPROVED FOR PUBLIC RELEASE

FIGURE 8
NICKEL THRESHOLD CURVE

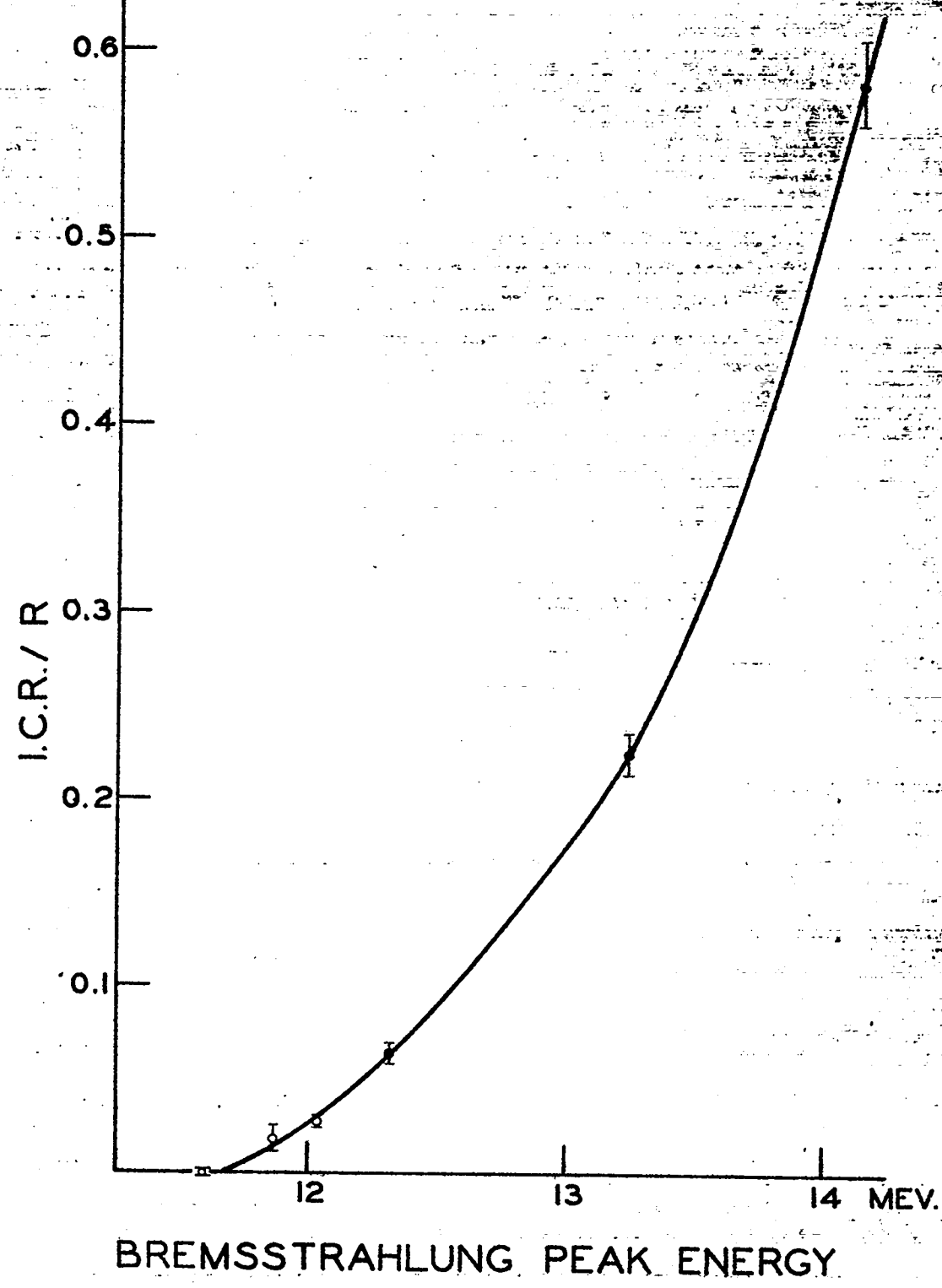

APPROVED FOR PUBLIC RELEASE

APPROVED FOR PUBLIC RELEASE

Lanthanum

Lanthanum sulphate was irradiated and counted in lucite holders as shown in Fig. 1. The lanthanum used had a naturally radioactive contaminate, presumably thorium, that raised the background of the sample to about 400 counts per minute, which made the observation of small activations rather uncertain.

No evidence was obtained for the 2.2 h period tentatively assigned to La^{138} by Pool et al.[1] That period would be expected should we observe the reaction $La^{139}(\gamma,n)La^{138}$. Instead we observed a small activity with a period of approximately 17.5 hours which corresponds to the decay period of La^{137}. Inghram et al.[2] have reported the existance of a stable lanthanum isotope of mass 138 of 0.089 percent abundance. Thus we have apparently observed the reaction $La^{138}(\gamma,n)La^{137}$.

The threshold curve observed for the 17.5 hour period is shown in Fig. 9. The ordinate is the initial counting rate of the 17.5 hour period after a four hour irradiation at the peak bremsstrahlung energy given by the abscissa. The observation of the threshold was rather uncertain because of the small activity observed and the necessity of subtracting off the large natural background plus the 40 hour period produced

---

1 Pool, Cork, Thornton, Phys. Rev. 52, 239 (1937).

2 M. G. Ingram, R. J. Hayden, D. C. Hess, Jr., Phys. Rev. 72, 349 (1947).

APPROVED FOR PUBLIC RELEASE

APPROVED FOR PUBLIC RELEASE

FIGURE 9
LANTHANUM THRESHOLD CURVE

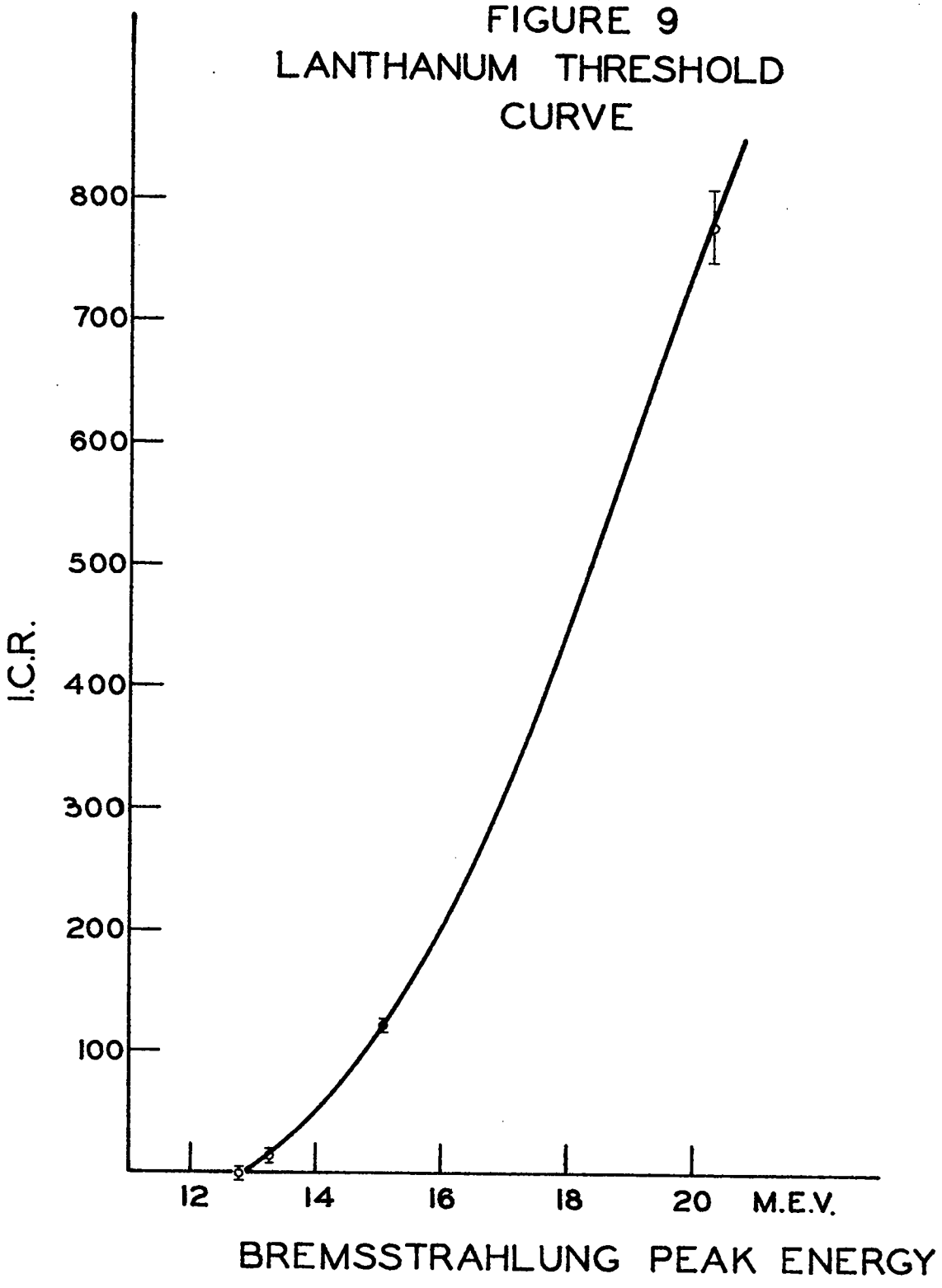

APPROVED FOR PUBLIC RELEASE

APPROVED FOR PUBLIC RELEASE

by the n-gamma reaction on La^{139}. Thus the value assigned to the threshold for the reaction $La^{138}(\gamma,n)La^{137}$ is 12.9 ± 0.4 Mev.

The authors would like to express their appreciation to Mr. Robert D. England for his very considerable help in keeping the betatron and associated circuits running during the course of this work.

APPROVED FOR PUBLIC RELEASE

APPROVED FOR PUBLIC RELEASE

UNCLASSIFIED

DOCUMENT ROOM
REC. FROM Ed. Sup.
DATE 3-7-49
REC. NO. REC.

UNCLASSIFIED

APPROVED FOR PUBLIC RELEASE