ER ID 098069

AIR-FLOW MEASUREMENTS IN LOS ALAMOS TA-49-700

February, 1998

David Wykoff
Jerry Stockton
Bill Lowry

Science and Engineering Associates
3205 Richards Lane, Suite A
Santa Fe, New Mexico 87505

(505) 424-6955
(505) 424-6956 Fax

SEASF-TR-97-186

Science & Engineering Associates, Inc.

30871

TABLE OF CONTENTS

LIST OF FIGURES AND TABLES ii
1. INTRODUCTION 1
2. OBJECTIVE 1
3. METHODOLOGY 2
   3.1 Straddle Packer Permeability Measurements 2
   3.2 Software Operation 6
   3.3 Instrumentation Package 9
   3.4 Open Borehole Anemometry 13
   3.5 Borehole Caliper Logging 15
4. FIELD-TEST CHRONOLOGY 15
5. FIELD-MEASUREMENT RESULTS 16
6. CONCLUSIONS AND RECOMMENDATIONS 20
7. REFERENCES 21

LIST OF FIGURES AND TABLES

Figure 1. Approximation of a spherical air-flow geometry with a conventional straddle packer design for in-situ soil gas permeability measurements. 2
Figure 2. Downhole instrument package and packers. 3
Figure 3. Inflatable packer assembly. 4
Figure 4. Packer system deployment trailer. 4
Figure 5. Los Alamos air permeability measurement system. 5
Figure 6. Packer system program flowchart. 6
Figure 7. Packer system programming flowchart. 8
Figure 8. Packer hardware flow diagram. 10
Figure 9. Packer downhole instrument package electrical schematic. 11
Table 1. Los Alamos packer system details. 12
Figure 10. Anemometer with centering cage. 13
Figure 11. Los Alamos borehole anemometry system. 14
Table 2. TA-49-700 air-flow measurement field chronology. 15
Figure 12. Air-flow measurement results and stratigraphy for borehole TA-49-700. 17
Table 3. Borehole anemometry record. 18
Table 4. Depth vs. permeability. 19

1. INTRODUCTION

Borehole TA-49-700 is an unusually deep (approximately 700 ft. deep) uncased borehole in the volcanic tuffs at TA-49. It was drilled with an air rotary drill rig and left with temporary 9 5/8" ODEX casing in place to the total depth. Once the ODEX casing is removed, this hole provides an opportunity to evaluate the air-flow characteristics of the tuffs at depths projecting well below the adjacent canyon floors. As part of the unsaturated zone characterization effort underway at TA-49, air-flow measurements were conducted for the purposes of comparing this site to TA-54, as well as supporting subsequent matric potential measurements in the same borehole.

The air-flow properties of volcanic tuffs are key to understanding their moisture state and transport characteristics. Naturally occurring air flow, and that induced by active processes such as vapor extraction remediation systems, can be predicted and analyzed only as accurately as the tuff's air permeability is known. Prior measurements of air permeability were conducted at TA-54 (Lowry 1997; SEA 1994) using straddle packer permeability and open borehole anemometry measurement systems. The packer system conducts quantified permeability measurements at multiple discrete locations in an open borehole, while open borehole anemometry is essentially a logging method that measures the bulk flow characteristics of a borehole under air extraction conditions. Over 300 discrete packer measurements were conducted in eight boreholes at TA-54 in 1994 and 1995. Each of these holes was also logged with the anemometry system.

In the TA-49 effort, the packer system previously used at TA-54 was refurbished to provide a more rugged and automated operation. Field operations consisted of conducting caliper logs of the open borehole, several anemometry surveys, and then a full set of packer measurements in zones of interest in the borehole. This report documents the modifications to the packer system and the field measurement results.

2. OBJECTIVE

The overall objective of this effort was to characterize the air-flow properties of the volcanic tuffs of TA-49 using the access provided by borehole TA-49-700. To accomplish this, the packer system used previously at TA-54 was repaired and refurbished to allow more automated operation, multiple borehole diameter capability, and extended depth range capability. Minor modifications were made to the open borehole anemometry system to accommodate the TA-49-700 borehole diameter.

3. METHODOLOGY

3.1 Straddle Packer Permeability Measurements

Straddle packer permeability measurements have historically been performed to conduct air and water permeability measurements in porous media. For this application, a steady-state spherical flow model is used. If the air injection (or extraction) source can be approximated as a sphere, then the steady-state air flow into the source, the source equivalent radius, the source pressure, and the ambient soil gas pressure can be used to infer the effective gas permeability k (Keller, Engstrom, and West 1973; Lowry and Narbutovskih 1991).

$$k = \frac{\mu R T \dot{m}}{2\pi M\left(P_o^2 - P^2\right)} \bullet \left(\frac{1}{r_o}\right)$$

where:

μ	=	dynamic gas viscosity
R	=	universal gas constant
T	=	absolute temperature
$\dot{m}$	=	gas mass flow into soil
M	=	gas molecular weight
P_o	=	absolute pressure of source
P	=	ambient absolute soil gas pressure
r_o	=	source radius

This model is applied in straddle packer measurements by setting r_o to be the radius of the sphere whose surface area is equal to the area of the exposed borehole wall (see figure 1).

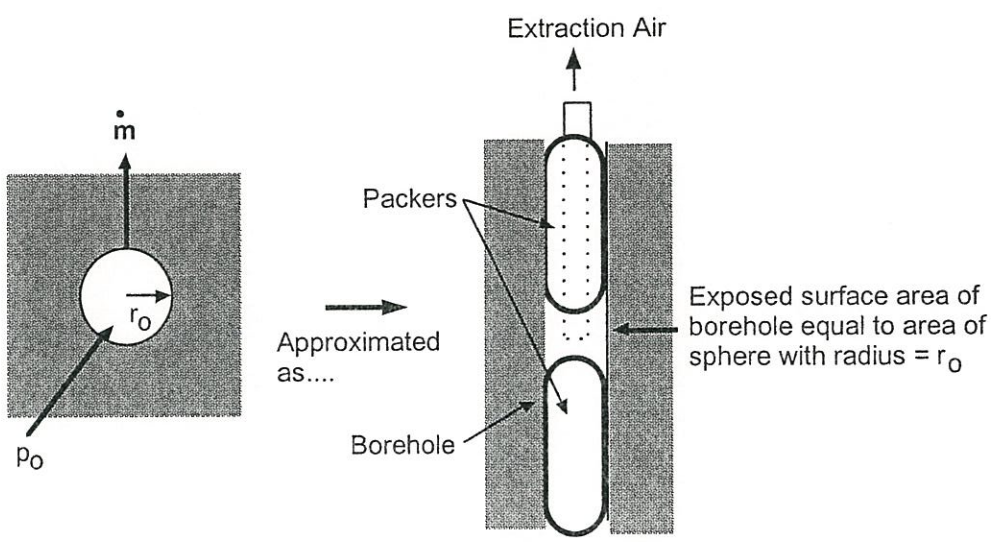

Figure 1. Approximation of a spherical air-flow geometry with a conventional straddle packer design for in-situ soil gas permeability measurements.

The packer system is depicted in figure 2. Packers are located above and below the extraction zone, separated by 27 inches. This separation is selected to increase the possibility of intersecting fractures in the injection zone. The packers are each six feet in length, fabricated of a lightweight packer material and operated at 7-psi internal pressure during the injection measurements (figure 3). Both three-inch and six-inch diameter packers are available. The primary instrumentation used in these measurements is the pressure difference between the injection zone and ambient, the temperature of the air being injected, and the air-flow rate during the injection. All of the sensors are located in an electronics package situated above the packer system, with the data transmitted uphole to a laptop computer for averaging and recording. The trailer-mounted system is depicted in figure 4, and the total system schematic is shown in figure 5.

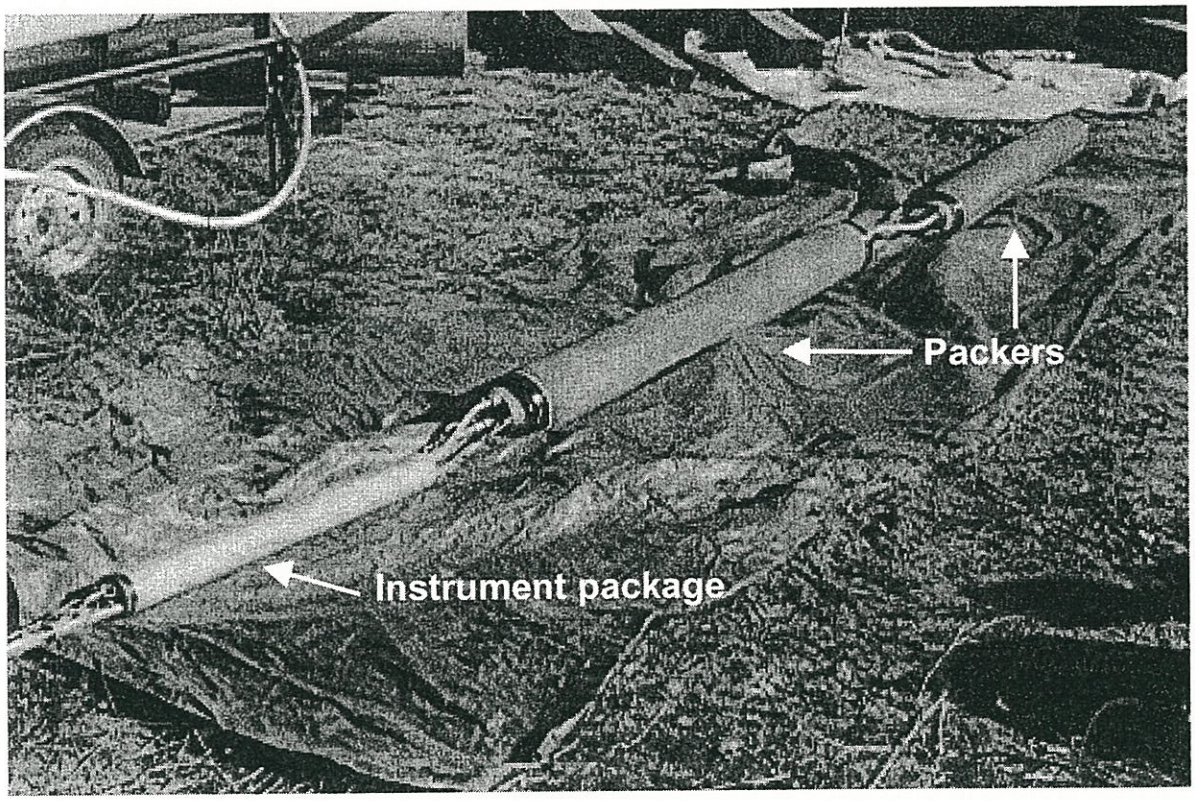

Figure 2. Downhole instrument package and packers.

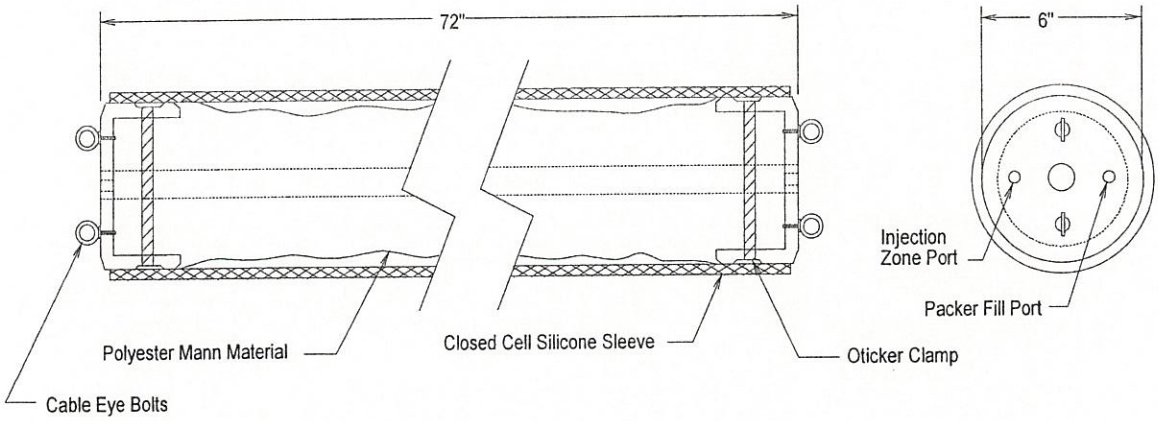

Figure 3. Inflatable packer assembly.

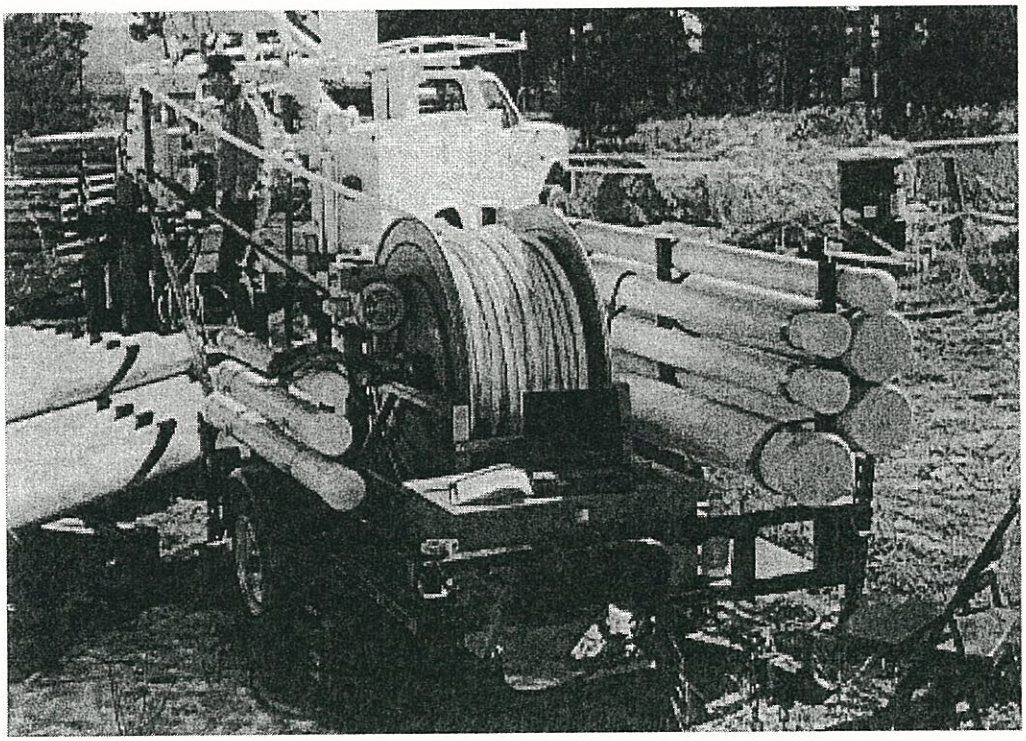

Figure 4. Packer system deployment trailer.

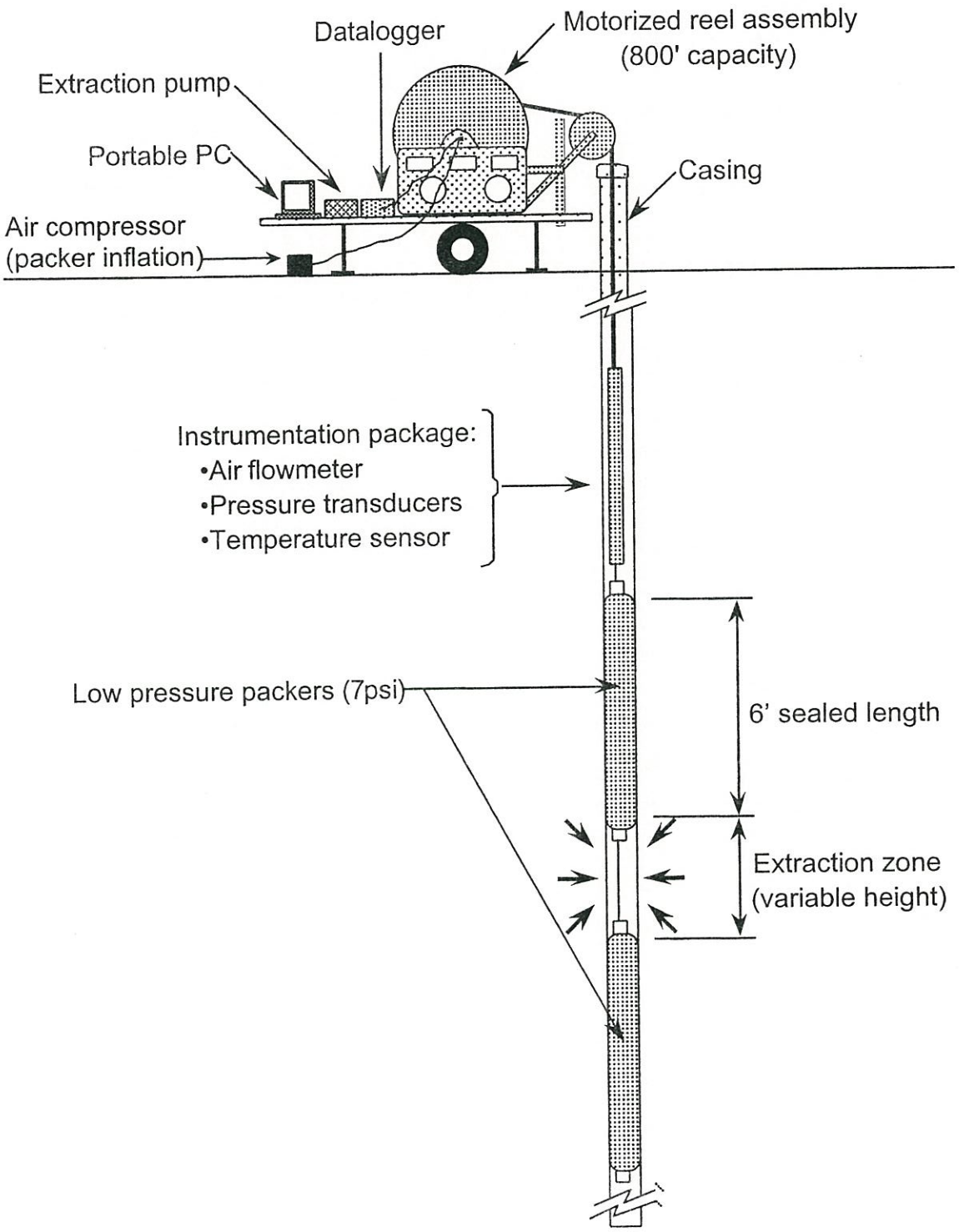

Figure 5. Los Alamos air permeability measurement system.

3.2 Software Operation

The measurement system software was designed to reduce the risk of system malfunction due to human (operator) error by totally automating measurement operation and data collection. Measurement software components are first initialized or "set" by the program to the appropriate start-up position(s). The user is then prompted to choose a function. The function options are: set up new data file (F1), change packer inflation pressure (F3), log borehole location (F5), close data files and exit (F7), deflate packers (F9), end current test/begin new test (F10) (see figure 6).

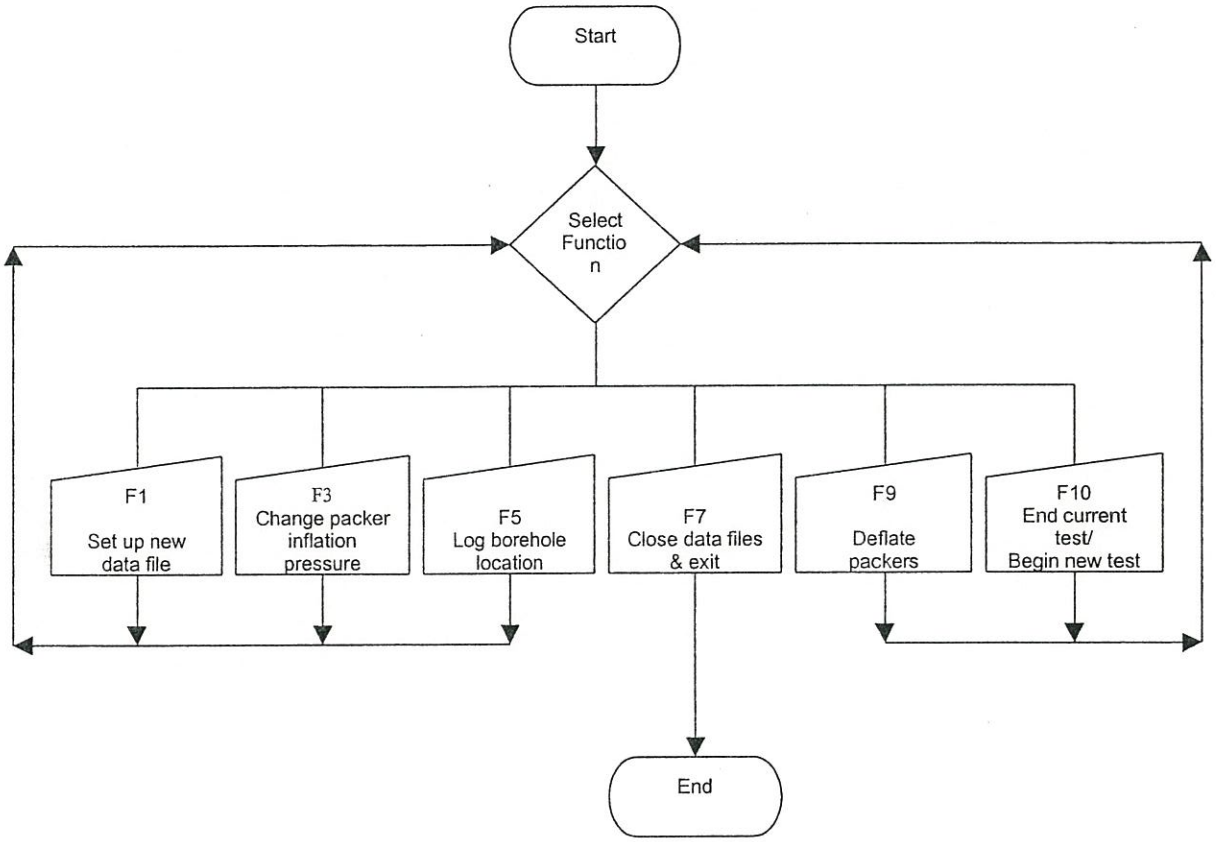

Figure 6. Packer system program flowchart.

F1 Function Key. To begin measurement(s) at a new location, the user must choose to "set up a new data file" (function key F1). Once this function is chosen, all other function keys are disabled until the user inputs the required file data. The system software prompts the user for all required information. After completion of data file setup, the user may continue to log the specific borehole location, start over with new file data, or exit the program completely (see figure 7).

F3 Function Key. At any time either after the initial file is set up, or after a measurement is complete, the packer inflation pressure may be changed. Pressing the F3 function key allows the user to vary packer pressure if necessary to better isolate the desired injection zone.

F5 Function Key. After the data file has been set up, the borehole may be logged. By pressing the F5 function key the user begins the logging process and inputs appropriate responses to the program prompts. This information is specific to the precise location in the borehole as more than one location can be logged without setting up a new data file. Measurements will continue for the duration specified by the user.

F7 Function Key. To end a test, or at the conclusion of the test day, an operator may exit the program and return to the c:\ prompt by pressing F7. This function safely closes all data files.

F9 Function Key. Because an operator may want to take additional measurements at a given location, packers are not automatically deflated following a measurement cycle. To deflate the packers, the user should press F9. A pressure will be displayed while the packers deflate. When packer pressure is less than 1 psig, the message "Packers Deflated" will appear and it is safe to relocate the downhole package.

F10 Function Key. To reset the packer hardware to the appropriate start-up settings, press F10. This will allow the user to begin a new test without leaving the packer software executable.

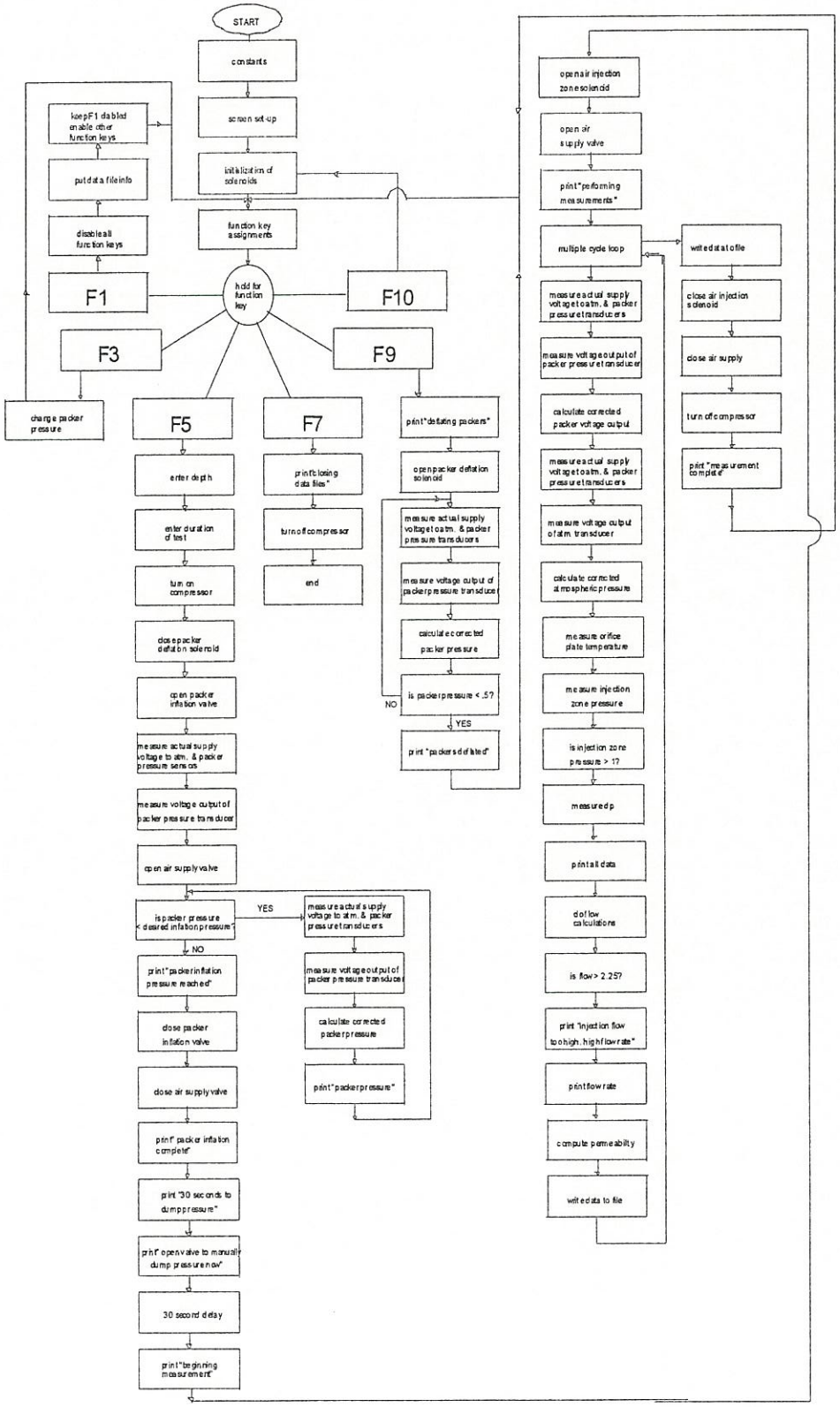

Figure 7. Packer system programming flowchart.

3.3 Instrumentation Package

The instrumentation package, located above the packers, is designed to allow the software and hardware to communicate and complete all measurements specified by the user in the start-up file without further user intervention. This includes turning on and off the air compressor, actuating the required valves in the proper timed sequence and recording all borehole data. Power, communication, and instrument configurations are depicted in figure 8.

Communication. The major components in the hardware package are the Analog to Digital (A/D) modules. These modules control every operation performed by the system. The modules in turn are controlled by the software via an RS-232 interface at the serial port of the laptop computer located on the trailer.

Power. The power for the system is generated by a 24 Vdc power supply, which receives its power from a standard 120 Vac outlet or 120 Vac generator. The 120 Vac also powers the system air compressor. The 24 Vdc supplies power to the A/D modules, the downhole control valves, and the injection zone and orifice tube transducers. It also supplies the 5 Vdc regulator and the 8 Vdc regulator that supply voltage to the downhole air temperature sensor and to the packer and atmospheric pressure sensors respectively (see figure 9).

Hardware Operation. When the system is started and the user is ready to begin a measurement, the measurement code prompts the 4060 Adam relay module to turn on the air compressor. For details of components and specifications see table 1. The channel of the module assigned to the air compressor energizes a second (heavy-duty) relay. The compressor turns on, the downhole vent valve is closed, and the system begins to fill. When the packers reach the desired pressure indicated by the packer pressure transducer, the packer supply valve is closed and air flow is diverted from filling the packers to flowing into the injection zone by opening the injection zone control valve.

The air-flow measurement is calculated using pressure data from a low-range differential pressure transducer connected to the high and low sides of an orifice tube. Temperature and absolute pressure are also included in this calculation using data obtained from a downhole temperature sensor mounted on the orifice tube, and a downhole absolute pressure transducer. The voltage data from all of the sensors is converted to usable data by the Adam 4017 A/D module. At this point, measurement data will begin to scroll on the screen of the PC and be recorded to a user-defined data file. This process will continue until the measurement cycle is complete. At the conclusion of measurements at a given location, the user may choose to repeat the measurement at the same borehole location with the same measurement parameters, repeat the location with different parameters, move to another depth in the borehole, or move to another borehole altogether.

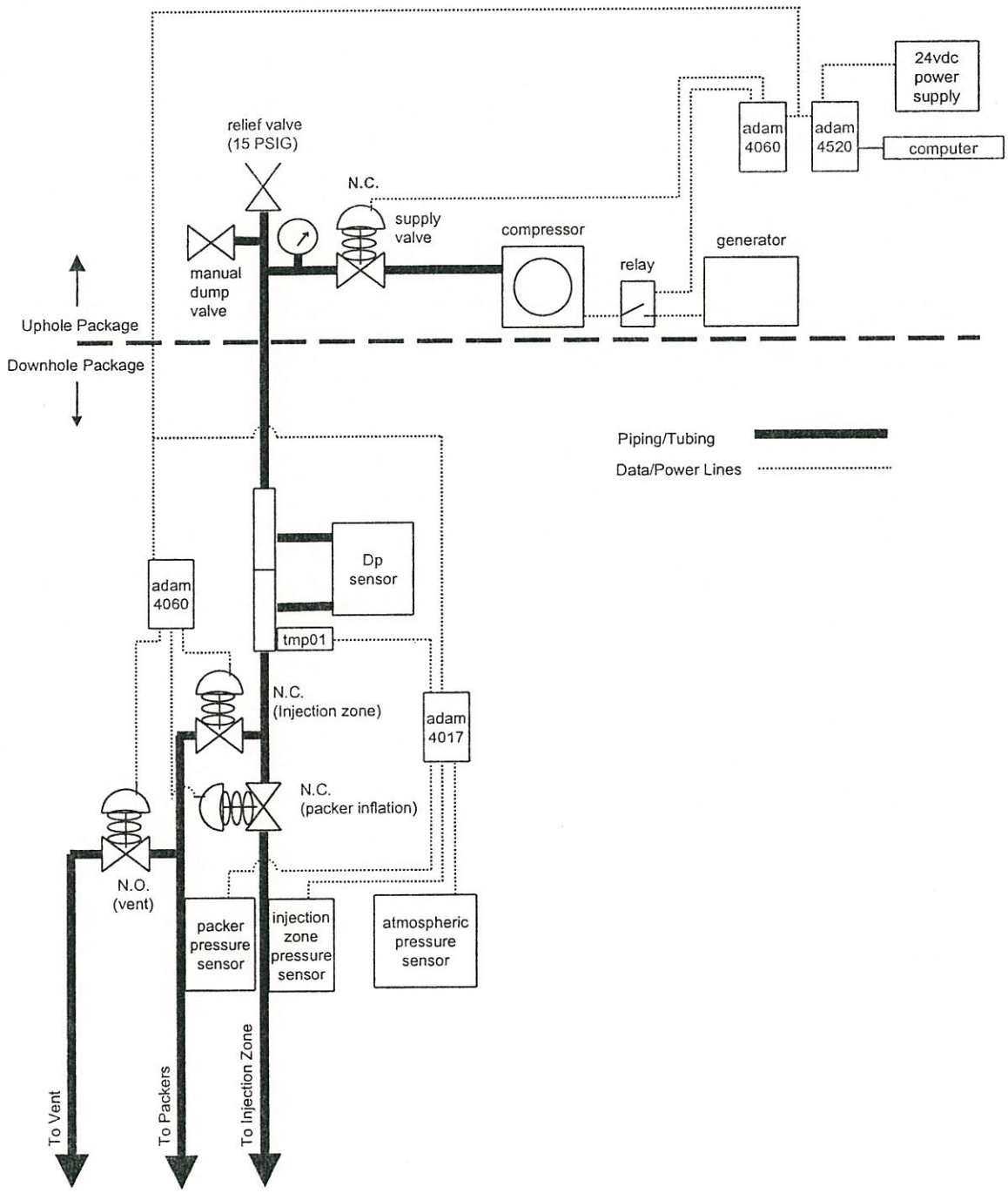

Figure 8. Packer hardware flow diagram.

PACKER DOWNHOLE INSTRUMENT PACKAGE ELECTRICAL SCHEMATIC

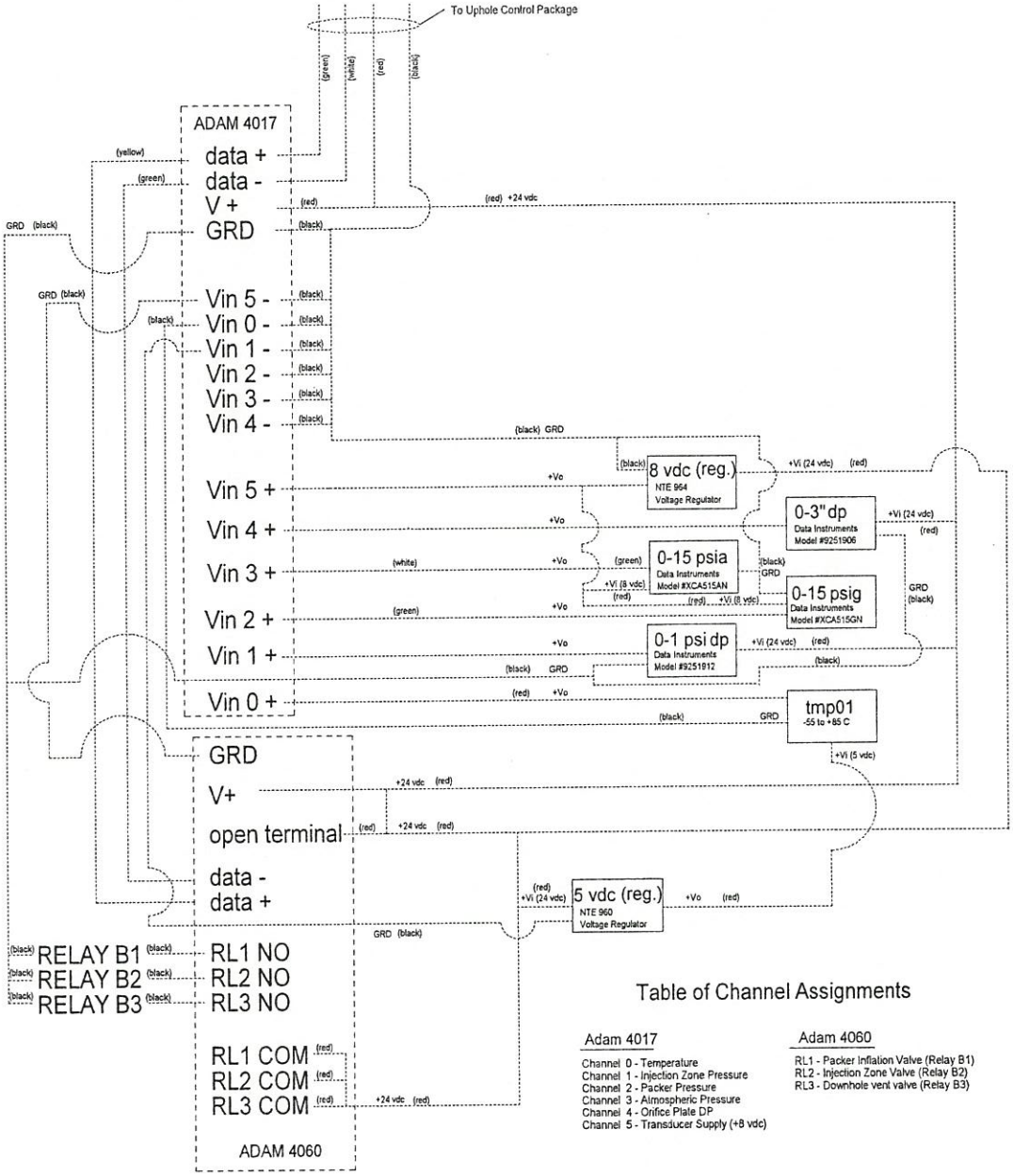

Figure 9. Packer downhole instrument package electrical schematic.

Table 1. Los Alamos packer system details.

Instrumentation

Description	Manufacturer/(Model #)	Excitati	Output	Eng. Units	Channel #	Component Function
Ambient Pressure	Data Instruments (XCA515AN)	8 Vdc	1-6 Vdc	3 psia/Vdc 0-15 psia	Adam 4017 Ch. 3	Measures downhole atmospheric pressure.
Orifice Plate Differential Pressure	Data Instruments (LP9251906)	12-24 Vdc	1-5 Vdc	.75" WC/Vdc 0-3" DWC	Adam 4017 Ch. 4	Measures orifice plate Dp used in flow calculation.
Packer Pressure	Data Instruments (XCA515GN)	8 Vdc	1-6 Vdc	3 psig/Vdc 0-15 psig	Adam 4017 Ch. 2	Allows packers to be inflated and deflated accurately.
Injection Zone Pressure	Data Instruments (LP9251912)	12-24 Vdc	1-5 Vdc	.25 psig/Vdc 0-1 psig	Adam 4017 Ch. 1	Used in flow and permeability calculations.
Air Temperature	Analog Devices (TMP01EP)	4.5-13.2 Vdc	See Eng. Units	5mV/K	Adam 4017 Ch. 0	Measures temperature of air flow used in calculations.

Control Components

Description	Manufacturer/(Model #)	Excitation	Channel #	Component Function
Packer Inflation Valve	KIP (6561118 – 24 Vdc)	24 Vdc	Adam 4060 RL1	Opens/closes air flow to packers downhole (normally closed).
Injection Zone Valve	KIP (6561118 – 24 Vdc)	24 Vdc	Adam 4060 RL2	Opens/closes air flow to injection zone downhole (normally closed).
Downhole Vent Valve	KIP (6561118 – 24 Vdc)	24 Vdc	Adam 4060 RL3	Used to vent packers at conclusion of measurement cycle (normally open).
Air Supply Valve	Dayton ¾" 2-way, N.C., 120 Vac	120 Vac	Adam 4060 RL2	Main uphole air-flow control valve.
Heavy Duty Relay		24 Vdc	Adam 4060 RL1	Used to actuate 120 Vac for air compressor.

Power Supplies

Description	Manufacturer/(Model #)	Excitation	Output	Component Function
24 Vdc Power Supply	Sola (SLS-24-036) 24 Vdc @3.6A	120 Vac	24 Vdc	Supplies all DC components and regulators.
8 Vdc Regulator	NTE(964)	10-35 Vdc	8 Vdc	Supplies Packer & Ambient Pressure transducers (read on Adam 4017 Ch. 5)
5 Vdc Regulator	NTE(960)	10-35 Vdc	5 Vdc	Supplies temperature sensor excitation.

A/D Components

Description	Manufacturer/(Model #)	Excitation	Output	Component Function
8 Channel A/D Module	American Advantech Corp. (Adam 4017)	10-30 Vdc	Data to CPU via serial port	Collects voltage data & transmits to CPU.
4 Relay Output Module	American Advantech Corp. (Adam 4060)	10-30 Vdc	Relay closure	Allows CPU (software) to control downhole valves.
4 Relay Output Module	American Advantech Corp. (Adam 4060)	10-30 Vdc	Relay closure	Allows CPU software to control uphole air valve & air compressor.
Isolated RS-232/485 Converter Module	American Advantech Corp. (Adam 4520)	10-30 Vdc	Data link	Converts RS232 data to RS 485.

3.4 Open Borehole Anemometry

Open borehole anemometry measures air production zones in the borehole under vacuum extraction conditions.

To conduct the anemometry measurements, a blower is configured at the top of the well to apply approximately 5-inch water column (12.5-mbar) vacuum on the well. The well pressure is measured with a Magnehelic differential pressure gauge (±2% of full-scale accuracy). The blower is allowed to operate for 20 to 30 minutes before logging to allow the borehole flow to stabilize. During the measurement, a velocity probe (see figure 10) is lowered in the well (located within two inches of the borehole center) and stopped at discrete locations to collect velocity data. The physical configuration is indicated in figure 11. The velocity sensor is a TSI hot film anemometry device with a measurement range of 10 ft/min. to 1000-ft/min standard velocity. Its stated accuracy is ±1.5% of the reading plus 0.5% of its full-scale indication. At 10 ft/m, this yields an uncertainty of ±5 ft/m, and at 100 ft/m the uncertainty is ±6.5 ft/min.

Data is acquired with a Campbell Scientific 21X datalogger located above ground. At each measurement location, the datalogger collects 10 samples (taken once per second), averages them, and performs standard deviation calculations. That data is then recorded. The anemometer is moved to the next location and the sequence repeated. Typically, measurements are conducted every 10 feet as the anemometer is raised out of the borehole. Data at 10-ft spacing (during retrieval) is reported.

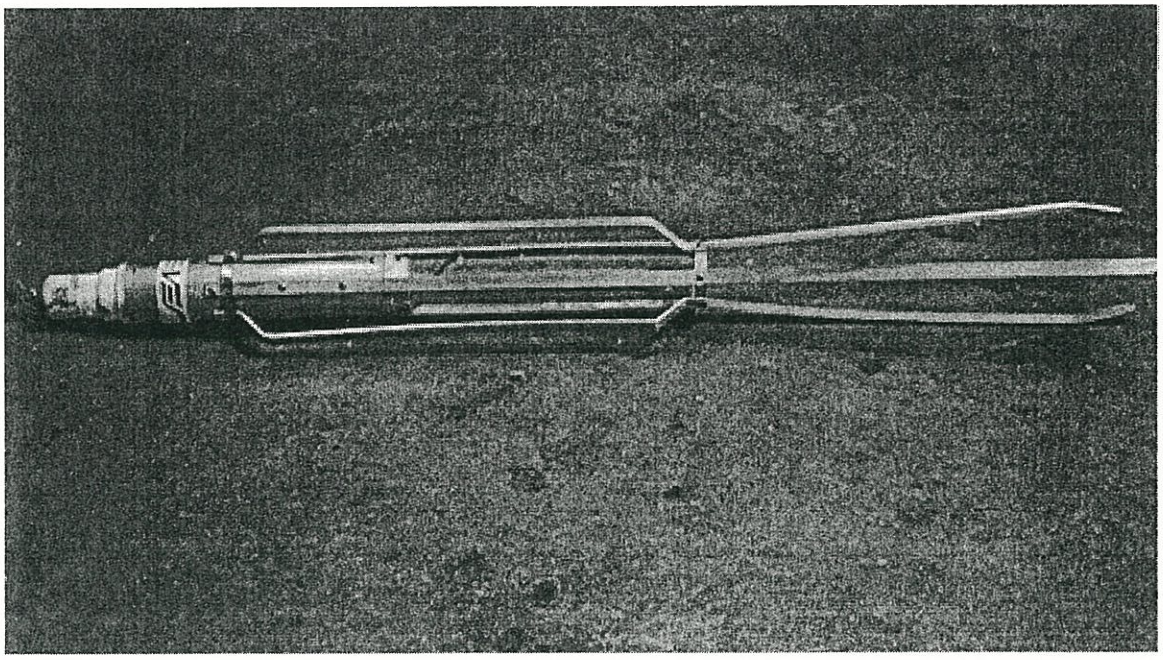

Figure 10. Anemometer with centering cage.

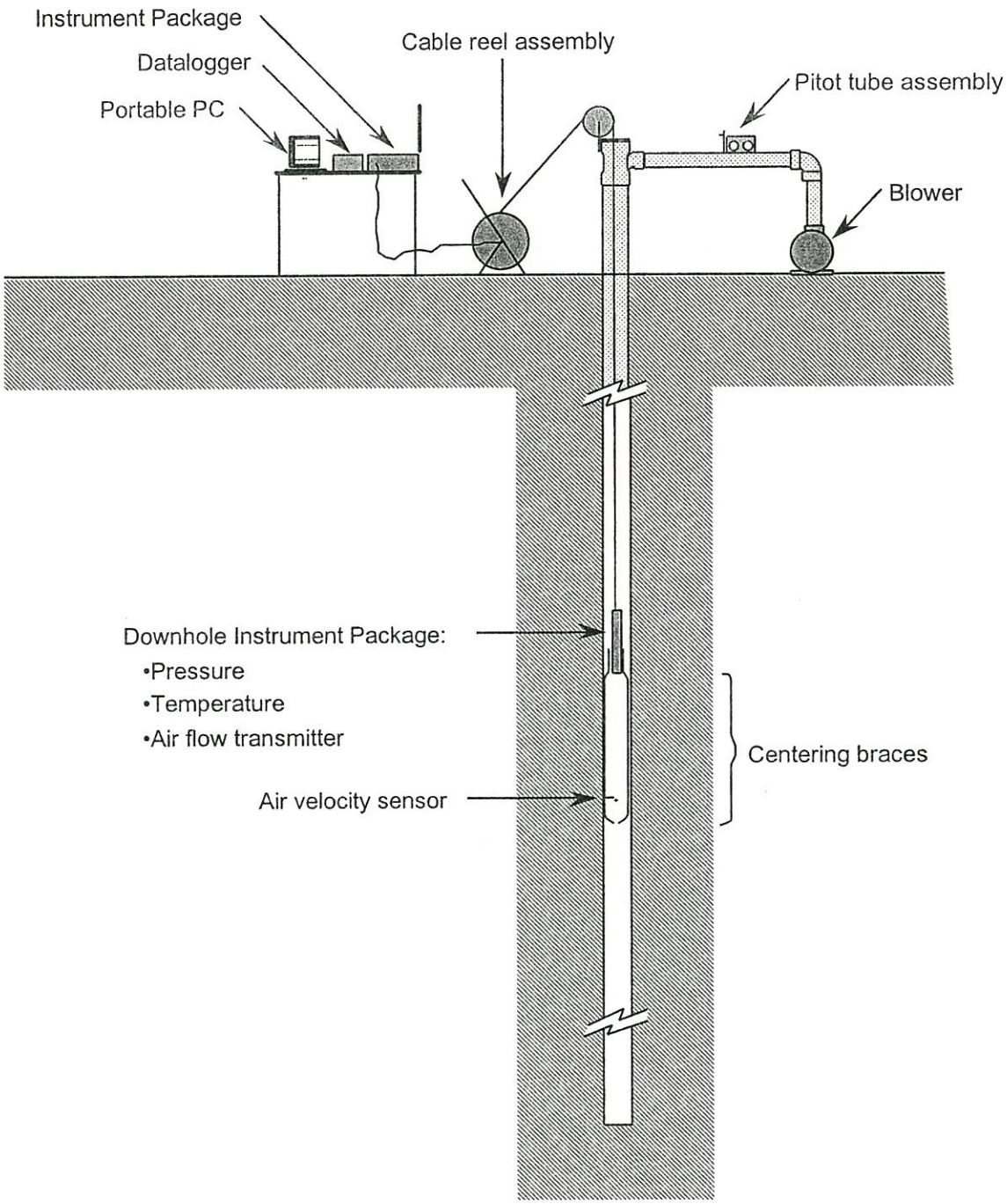

Figure 11. Los Alamos borehole anemometry system.

3.5 Borehole Caliper Logging

The borehole at TA-49 is nominally 10 inches in diameter, with actual diameters ranging from 9 to over 20 inches. The well is cased in the top 50 feet with 10-inch diameter steel casing. The diameter of the hole was determined by using a three-arm caliper with the MGX-1 logging system rented through COLOG, Inc. of Golden, CO. The MGX-1 is a portable digital geophysical logging system consisting of the following major components:

1. Motorized winch
2. Tripod assembly for ground and derrick
3. Single conductor cable and cablehead
4. Integrally mounted electronics
5. Logging probes
6. Mud plug, power cables, serial cable, and winch to console cable
7. Hand crank for emergency operation of winch
8. High strength polyethylene cases for logger and probe/tripod
9. LOGSHELL software for data acquisition and processing
10. Portable PC

Two caliper logs were run on the total hole to check for places that were enlarged to the point that the packers would not seal the hole. The hole diameter is used in the calculation of permeability.

4. FIELD-TEST CHRONOLOGY

The table below lists the dates and activities that were conducted in the field at TA 49 in November and December of 1997 associated with the air-flow measurements of the 700-foot borehole.

Table 2. TA-49-700 air-flow measurement field chronology.

Activity	**Date**
Kick off meeting	11-4-97
Site specific training	11-5-97
Pull casing	11-6-97 to 11-7-97
Caliper log	11-10-97
Anemometry survey, air permeability survey	11-12-97
Air permeability survey	11-13-97 to 11-18-97
Anemometry survey	11-18-97
Caliper log	11-19-97
Pull casing	11-21-97
Air permeability survey	11-25-97
Caliper log	12-1-97
Air permeability survey	12-3-97 to 12-5-97
Remove jacks, cement in casing	12-6-97
Final anemometry survey	12-8-97

5. FIELD-MEASUREMENT RESULTS

The borehole anemometry survey indicates relatively uniform, low air-flow production over the interval of 150 to 560 ft. depth as seen by the almost constant air velocity profile. This encompasses the non-welded unit of the Tshirege member down to the Cerro Toledo interval. Above the non-welded unit a distinct increase in air production occurs until the surface casing is encountered at 50 ft. From the bottom of the borehole up to the 600-ft. depth, the air velocity is nominally zero, and a measurable rise occurs just below the Cerro Toledo interval (560 to 590 ft.)

Five discrete permeability measurements in the non-welded unit and above (from below the surface casing to a depth of approximately 183 ft.) averaged 3.3 Darcies, with a high of 5.2 and a low of 1.8 Darcies. This zone is consistent with the high production zone indicated by the anemometry measurement. An interval from 90 to 150 ft. could not be tested because of the excessive enlargement of the borehole (up to 20-in. diameter) and the diameter limitation of the packer assembly. Below this region, and extending down to just above the Cerro Toledo at 560 ft., 33 measurements produced an average of 0.69 Darcies (minimum of 0.02 and maximum of 7.44 Darcies). The Cerro Toledo interval included two higher results at 1.94 and 2.72 Darcies, which are consistent with the increase in air velocity from the anemometry survey at that interval. Below 600 ft. the permeability shows a general increase to a peak of 30.46 Darcies. Since the anemometry data does not show a production increase in this region the permeability data is suspect, primarily due to the trend of increasing diameter in the borehole below this region as indicated by the caliper log. The packers are designed to seal a borehole up to 10 inches in diameter, and the log indicated at the 640-ft. depth, the borehole was 12 inches and increasing with depth). The caliper tool depth limit was 640 ft.

Previous in-situ measurements at TA-54 (SEA 1994; Lowry 1997) indicated similar but slightly higher permeabilities in Unit 1, ranging from 0.5 to 2.0 Darcies. Measurements in the TA-54 Cerro Toledo interval also showed distinctly higher permeabilities (up to 11.5 Darcies) compared to the upper regions of the borehole. In all of the TA-54 boreholes documented in the earlier measurements (54-1001 through 54-1006, 54-1017, 54-1018), the vapor phase notch at the 120 to 140 ft. depth (depending on the borehole) indicated a distinctly higher permeability. At TA-49-700, where the vapor phase notch exists at 360 ft. depth, it is difficult to see any distinct difference from the balance of the Unit 1 and 2 data.

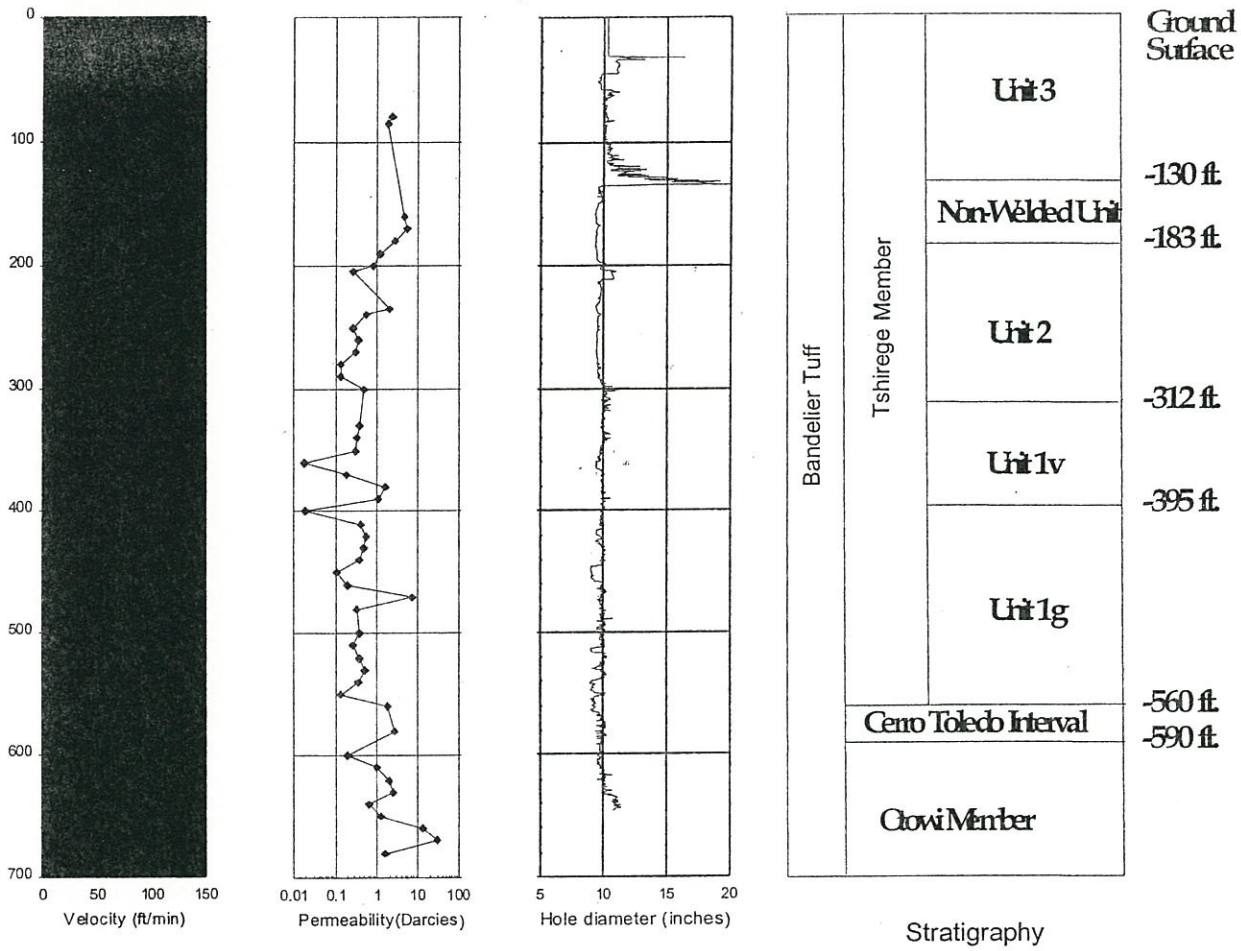

Figure 12. Air-flow measurement results and stratigraphy for borehole TA-49-700.

Table 3. Borehole anemometry record.

Borehole:	TA-49		Logged by:	Dave Wykoff
Total Depth:	700		Datum:	Ground Surface
Date:	8-Dec		Blower turned on:	11:11
Time	Depth (ft)	Velocity (ft/min)	Well vac. (in w.c.)	Orifice Plate dp (in w.c.)
12:06	660	1.0	5	0.7
12:09	650	1.7	5	0.7
12:11	640	2.0	5	0.7
12:13	630	2.6	5	0.7
12:14	620	6.7	5	0.7
12:15	610	12.8	5	0.7
12:16	600	2.6	5	0.7
12:18	590	8.3	5	0.7
12:22	580	14.8	5	0.7
12:25	570	33.7	5	0.7
12:27	560	38.8	5	0.7
12:30	550	38.1	5	0.7
12:32	540	26.8	5	0.7
12:34	530	28.6	5	0.7
12:37	520	25.8	5	0.7
12:39	510	29.7	5	0.7
12:41	500	29.1	5	0.7
12:43	490	28.3	5	0.7
12:48	480	35.0	5	0.7
12:50	470	38.0	5	0.7
12:53	460	30.9	5	0.7
12:55	450	27.3	5	0.7
12:57	440	32.6	5	0.7
13:00	430	32.9	5	0.7
13:02	420	34.5	5	0.7
13:03	410	30.9	5	0.7
13:04	400	31.0	5	0.7
13:18	390	32.5	5	0.7
13:20	380	34.9	5	0.7
13:21	370	39.7	5	0.7
13:22	360	35.2	5	0.7
13:23	350	38.4	5	0.7
13:24	340	41.1	5	0.7
13:25	330	40.8	5	0.7
13:26	320	36.2	5	0.7
13:27	310	38.5	5	0.7
13:28	300	41.0	5	0.7
13:29	290	40.0	5	0.7
13:30	280	40.3	5	0.7
13:31	270	39.3	5	0.7
13:32	260	39.4	5	0.7
13:33	250	39.0	5	0.7
13:34	240	39.9	5	0.7
13:35	230	37.8	5	0.7
13:36	220	39.0	5	0.7
13:37	210	42.0	5	0.7
13:38	200	41.0	5	0.7
13:39	190	44.8	5	0.7
13:40	180	48.4	5	0.7
13:41	170	50.4	5	0.7
13:42	160	52.5	5	0.7
13:43	150	27.5	5	0.7
13:44	140	46.6	5	0.7
13:45	130	51.3	5	0.7
13:46	120	62.0	5	0.7
13:47	110	80.7	5	0.7
13:48	100	84.1	5	0.7
13:49	90	88.4	5	0.7
13:50	80	98.9	5	0.7
13:51	70	108.5	5	0.7
13:52	60	89.1	5	0.7
13:53	50	99.1	5	0.7
13:54	40	101.5	5	0.7
13:55	30	103.5	5	0.7
13:56	20	102.0	5	0.7
13:57	10	102.8	5	0.7
13:58	0	187.0	5	0.7

Table 4. Depth vs. permeability.

Depth (ft)	Temp (C)	Packer Pressure (psi)	Pressure (in wc)	Atm Press (psia)	Injection Overpress. (psia)	Flow Rate (SCFM)	Permeability (Darcies)
80	13.45	5.31	0.6105	11.63	0.312	1.235	2.33
85	14.05	6.09	0.3923	11.63	0.319	0.997	1.84
160	11.45	5.88	0.5558	11.73	0.150	1.189	4.62
170	12.45	5.95	1.4100	11.72	0.209	1.862	5.20
180	13.45	6.42	0.6232	11.72	0.273	1.252	2.69
190	14.25	6.49	0.3990	11.72	0.478	1.009	1.23
200	14.85	6.49	0.2993	11.72	0.609	0.878	0.84
205	16.05	6.71	0.0300	11.72	0.646	0.294	0.27
235	15.65	6.95	0.5520	11.72	0.349	1.177	1.98
240	16.25	6.45	0.2535	11.72	0.799	0.809	0.58
250	17.05	6.75	0.0503	11.72	0.818	0.375	0.26
260	17.25	6.64	0.0503	11.73	0.603	0.375	0.36
270	17.45	6.69	0.0398	11.74	0.608	0.335	0.32
280	18.65	6.49	0.0090	11.74	0.705	0.168	0.14
290	18.65	6.74	0.0120	11.74	0.801	0.192	0.14
300	7.65	6.54	0.0195	11.80	0.277	0.245	0.50
330	10.05	6.57	0.0525	11.80	0.550	0.388	0.40
340	11.65	6.62	0.0458	11.79	0.631	0.363	0.33
350	12.85	6.51	0.0248	11.79	0.505	0.271	0.31
360	13.65	6.51	0.0001	11.79	0.745	0.023	0.02
370	14.45	6.57	0.0112	11.79	0.597	0.188	0.18
380	14.45	6.55	0.8018	11.79	0.510	1.416	1.61
390	14.85	6.47	0.3495	11.79	0.486	0.948	1.13
400	15.85	6.48	0.0001	11.79	0.666	0.023	0.02
410	15.85	6.43	0.0930	11.79	0.668	0.503	0.43
420	15.65	6.44	0.1808	11.79	0.677	0.691	0.59
430	16.05	6.77	0.1065	11.79	0.646	0.537	0.48
440	16.25	6.50	0.1478	11.80	0.881	0.627	0.41
450	16.45	6.46	0.0045	11.80	0.648	0.123	0.11
460	16.85	6.36	0.0232	11.80	0.739	0.262	0.20
470	18.25	6.41	0.3120	11.80	0.072	0.894	7.44
480	17.25	6.42	0.0937	11.81	0.862	0.504	0.34
500	17.45	6.36	0.1223	11.82	0.830	0.572	0.40
510	17.85	6.49	0.0473	11.83	0.782	0.365	0.27
520	18.05	6.32	0.1425	11.83	0.918	0.615	0.38
530	18.25	6.37	0.1523	11.84	0.706	0.635	0.52
540	18.25	6.31	0.0900	11.84	0.796	0.495	0.36
550	18.65	6.35	0.0075	11.84	0.662	0.155	0.14
560	17.65	6.32	1.4415	11.85	0.560	1.876	1.94
580	17.45	6.34	1.2623	11.86	0.377	1.760	2.72
600	19.25	6.26	0.0158	11.87	0.615	0.218	0.21
610	18.45	6.43	0.3983	11.70	0.691	0.890	1.05
620	17.85	6.50	0.4005	11.70	0.359	0.893	2.05
630	17.85	6.78	0.1898	11.71	0.200	0.618	2.56
640	17.45	6.51	0.1703	11.71	0.699	0.587	0.68
650	16.45	6.40	0.3000	11.70	0.502	0.777	1.26
660	15.85	6.71	0.9375	11.70	0.084	1.364	13.47
670	15.25	6.57	1.2375	11.70	0.043	1.566	30.46
680	14.45	5.11	0.5288	11.71	0.529	1.030	1.57

6. CONCLUSIONS AND RECOMMENDATIONS

The objectives of this effort were to refurbish the air permeability measurement system previously used at TA-54 and conduct detailed air flow measurements in borehole TA-49-700. The purpose of the TA-49 measurements was to obtain relevant data from that site to compare with the TA-54 characterization data, and also to prepare for the subsequent matric potential measurements in TA-49-700.

Improvements in the air permeability measurement system included:

- Increasing the depth capacity of the system from 500 to 1000 ft. with a new hose/cable assembly
- Replacing the packers with more rugged, pliable units
- Upgrading the instruments and controls to allow automated sequencing of valves and data acquisition, reducing operator requirements and time required for the measurement

The improvements in the permeability measurement system allowed faster and much more reliable measurements in deep holes such as TA-49-700.

The permeability measurements in TA-49-700 showed slightly lower permeabilities than those obtained at TA-54, but otherwise were comparable in magnitude and trends within units. The anemometry measurements indicated high borehole production in regions where discrete measurements showed high permeability intervals. The packer measurements near the bottom of the borehole are suspected of indicating artificially high permeabilities because the borehole is enlarged beyond the sealing range of the packers. Anemometry measurements in that region do not indicate that it is particularly high in permeability.

The measurement program showed that comparable in situ data could be obtained at the two different sites. It is recommended that a quantitative comparison of in situ measurement data be conducted to relate, unit by unit, in situ permeability characteristics of the tuffs and relate that information to other field measurement results at Los Alamos.

7. ACKNOWLEDGMENTS

The authors wish to acknowledge the field support effort by John Crocker of ERM, who provided the health and safety oversight and coordinated the project. John Smith provided the overall ERM program guidance. Brad Lounsbury of Los Alamos provided the site access to TA-49. Robert Gilkeson developed the original design for the TA-49 measurement program in its early stages.

8. REFERENCES

Keller, C., D. Engstrom, and F. West. 1973. "In-Situ Permeability Measurements for the Event in U1-C." Los Alamos Report LANL-5425-MS. Los Alamos National Laboratory, Los Alamos, NM.

Lowry, Bill. 1997. "Data Report: In-Situ Permeability and Open Borehole Anemometry Measurements in Boreholes 54-1017 and 54-1018, Los Alamos TA-54." SEASF-TR-97-175. Science and Engineering Associates, Santa Fe, NM.

Lowry, W. E., and S. M. Narbutovskih. 1991. "High Resolution Gas Permeability Measurements with the SEAMIST™ System." In *Proceedings of the Fifth National Outdoor Action Conference in Aquifer Restoration, Ground Water Monitoring, and Geophysical Methods*, 685-698. May 13-16, Las Vegas, NV. Dublin, OH: Water Well Journal.

Science and Engineering Associates, Inc. (SEA). 1994. "Data Report: Open Borehole Anemometry and In-Situ Gas Permeability Measurements in Boreholes 54-1001 Through 54-1006, Los Alamos Technical Area 54." SEASF-TR-94-020. Science and Engineering Associates, Inc., Santa Fe, NM.