EPA/540/R-94/521
September 1998

102744

# Terra-Kleen Response Group, Inc.

# Solvent Extraction Technology

## Innovative Technology Evaluation Report

National Risk Management Research Laboratory
Office of Research and Development
U.S. Environmental Protection Agency
Cincinnati, Ohio 45268

Printed on Recycled Paper

31172

# Notice

The information in this document has been funded by the U. S. Environmental Protection Agency (EPA) under Contract Nos. 68-CO-0047 and 68-C5-0037 to Tetra Tech EM Inc. (formerly PRC Environmental Management, Inc.). It has been subjected to the Agency's peer and administrative reviews and has been approved for publication as an EPA document. Mention of trade names or commercial products does not constitute an endorsement or recommendation for use.

# Foreword

The U.S. Environmental Protection Agency (EPA) is charged by Congress with protecting the Nation's land, air, and water resources. Under a mandate of national environmental laws, the Agency strives to formulate and implement actions leading to a compatible balance between human activities and the ability of natural systems to support and nurture life. To meet this mandate, EPA's research program is providing data and technical support for solving environmental problems today and building a science knowledge base necessary to manage our ecological resources wisely, understand how pollutants affect our health, and prevent or reduce environmental risks in the future.

The National Risk Management Research Laboratory is the Agency's center for investigation of technological and management approaches for reducing risks from threats to human health and the environment. The focus of the Laboratory's research program is on methods for the prevention and control of pollution to air, land, water and subsurface resources; protection of water quality in public water systems; remediation of contaminated sites and ground water; and prevention and control of indoor air pollution. The goal of this research effort is to catalyze development and implementation of innovative, cost-effective environmental technologies; develop scientific and engineering information needed by EPA to support regulatory and policy decisions; and provide technical support and information transfer to ensure effective implementation of environmental regulations and strategies.

This publication has been produced as part of the Laboratory's strategic long-term research plan. It is published and made available by EPA's Office of Research and Development to assist the user community and to link researchers with their clients.

E. Timothy Oppelt, Director
National Risk Management Research Laboratory

# Abstract

Terra-Kleen Response Group, Inc. (Terra-Kleen) has developed a solvent extraction technology to remove organic contaminants from soil. The U. S. Environmental Protection Agency (EPA) Superfund Innovative Technology Evaluation (SITE) Program evaluated the performance of this technology during a demonstration at Site 4 of Naval Air Station North Island (NASNI) in San Diego, California in May and June 1994. This Innovative Technology Evaluation Report (ITER) describes the technology and environmental requirements, an economic analysis of treatment costs, and an evaluation of the performance of the technology during the SITE demonstration.

The Terra-Kleen technology employs a proprietary solvent that extracts organic contaminants from contaminated soil. Following this extraction, the organic-laden solvent is then filtered and purified, using a proprietary purification unit. Regenerated solvent is continuously recycled through the contaminated soil until a target cleanup level is achieved. Any solvent remaining in the treated soil is removed using vacuum extraction and biological treatment. Terra-Kleen claims that its treatment process removes polychlorinated biphenyls (PCB), petroleum hydrocarbons, chlorinated hydrocarbons, polynuclear aromatic hydrocarbons, polychlorinated dibenzo-p-dioxins, polychlorinated dibenzo-p-furans, and metals from contaminated soil.

An initial treatability study was conducted to determine the technology's ability to remove PCBs from soil collected from three sites that was shipped to Terra-Kleen's testing facility in Okmulgee, Oklahoma. These soils were obtained from Sites 4 and 6 at Naval Air Station North Island (NASNI) in Coronado, California, and from a site in Anchorage, Alaska. Results from treated soil showed that PCB removal efficiency ranged from 95.3 to 99.1 percent. PCB concentrations in treated soils from both the NASNI sites were reduced to below the Toxic Substances Control Act incineration equivalency concentration of 2 milligrams per kilogram (mg/kg). The Alaskan soil contained a higher percentage of fines, clay, and natural organic matter, a fact that contributed to the higher number of extraction cycles needed to reduce PCB concentrations to 6.0 mg/kg.

The Terra-Kleen technology was demonstrated under the SITE Program at NASNI in May and June 1994. The demonstration provided information on the performance and cost of the Terra-Kleen technology. Analytical results for treated soil showed that PCB concentrations of 144 mg/kg in contaminated soil were decreased to less than 1.7 1 mg/kg with a significance level of 0.05, for an overall removal efficiency of 98.8 plus or minus 0.1 percent. Untreated and treated soils were also analyzed for parameters such as oil and grease, volatile organic compounds, semivolatile organic compounds, dioxins, and furans to determine the Technology's ability to remediate soils contaminated with these constituents. Sampling results indicated that the technology removed 66.3 plus or minus 5.47 percent of the oil and grease, and reduced hexachlorodibenzofurans and pentachlorodibenzofurans by 92 plus or minus 0.82 percent and 76 plus or minus 5.28 percent, respectively.

After the SITE demonstration, the SITE Program collected soil samples during a full-scale remediation of pesticide-contaminated soils at Naval Communication Station Stockton in Stockton, California. Soil at different sites on the installation were contaminated with DDD, DDE, and DDT at concentrations of 150, 50, and 600 mg/kg, respectively. Percent removals for all three pesticides ranged from 99.4 to 99.9 percent.

An economic analysis for the Terra-Kleen SITE demonstration was based on theoretical sites containing 500, 2,000, and 10,000 cubic yards of contaminated soil, respectively. The costs per ton were calculated as $300, $210, and $170 for each of the three sites, respectively. This unit cost included the estimates for remediation, site preparation, residuals shipping, handling, and disposal.

# Contents


Acronyms, Abbreviations, and Symbols.. ..... ix
Conversion Factors ..... xi
Acknowledgments ..... xii
Executive Summary ..... 1

1 Introduction ..... 3

1.1 Brief Description of the SITE Program and Reports ..... 3

1.2 Innovative Technology Evaluation Report.. ..... 4

1.3 Technology Description ..... 4

1.3.1 Soil Dewatering ..... 6

1.3.2 Soil Treatment ..... 6

1.3.3 Solvent Regeneration ..... 6

1.3.4 ResidualSolvent Removal ..... 7

1.4 Key Contacts ..... 7

2 Technology Applicability ..... 9

2.1 Technology Performance Compared to National Contingency Plan Evaluation Criteria.. .. 9

2.1.1 Overall Protection of Human Health and the Environment ..... 9

2.1.2 Compliance With Applicable or Relevant and Appropriate Requirements .....11

2.1.3 Long-Term Effectiveness and Permanence ..... 11

2.1.4 Reduction in Toxicity, Mobility, or Volume Through Treatment.. ..... 12

2.1.5 Short-Term Effectiveness ..... 12

2.1.6 Implementability.. ..... 13

2.1.7 cost ..... 13

2.1.8 Community Acceptance ..... 13

2.1.9 State Acceptance ..... 13

2.2 Technology Performance Compared to ARARs ..... 13

2.2.1 Resource Conservation and Recovery Act ..... 14

2.2.2 Clean Air Act ..... 14

2.2.3 Toxic Substances Control Act.. ..... 14

2.2.4 Occupational Safety and Health Act ..... 16

# Contents (continued)


2.2.5 Hazardous Materials Transportation Act ..... 16

2.3 Operability of the Technology ..... 16

2.4 Applicable Wastes ..... 17

2.5 Material Handling Requirements ..... 17

2.6 Site Support Requirements ..... 17

2.7 Limitations of the Technology ..... 18

3 Treatment Effectiveness ..... 19

3.1 Background ..... 19

3.1.1 NASNI ..... 19

3.1.2 Site4 ..... 22

3.1.3 Geology and Soils ..... 22

3.1.4 Contamination at Site 4 ..... 22

3.2 Demonstration Objectives and Approach.. ..... 22

3.3 Sampling and Analytical Procedures.. ..... 26

3.3.1 Demonstration Preparation.. ..... 26

3.3.2 Sampling and Analysis Program ..... 26

3.3.3 Quality Assurance and Quality Control Program ..... 28

3.4 Demonstration Results and Conclusions ..... 29

3.4.1 Primary Objective ..... 29

3.4.2 Secondary Objective S1 ..... 30

3.4.3 Secondary Objective S2. ..... 30

3.4.4 Secondary Objective S3 ..... 33

3.4.5 Secondary Objective S4 ..... 33

3.4.6 Secondary Objective S5.. ..... 34

4 Economic Analysis.. ..... 35

4.1 Basis of Economic Analysis ..... 35

4.2 Assumptions for the Economic Analysis ..... 35

4.3 Factors Affecting Costs ..... 36

4.4 Results of the Economic Analysis ..... 37

4.4.1 Site Preparation Costs ..... 37

4.4.2 Permitting and Regulatory Requirements ..... 37

4.4.3 Startup ..... 37

4.4.4 Equipment . . ..... 39

4.4.5 Labor ..... 39

4.4.6 Consumables and Supplies.. ..... 39

4.4.7 Utilities ..... 40

# Contents (continued)

4.4.8 Effluent Treatment and Disposal ..... 40

4.4.9 Residuals and Waste Shipping and Handling ..... 40

4.4.10 Analytical Services ..... 41

4.4.11 Maintenance and Modifications ..... 41

4.4.12 Demobilization ..... 41

5 Technology Status ..... 42

6 References ..... 43

Appendix

A Terra-Kleen Technology Treatability Study

B Terra-Kleen Technology Full-Scale Implementation

C Vendor Claims for the Terra-Kleen Technology

## Figures


1-1 Schematic Diagram of the Terra-Kleen Technology ..... 5

3-1 Location of NASNI ..... 20

3-2 Site 4 Location Map ..... 21

3-3 NASNI Site 4 Demonstration Location ..... 23

3-4 NASNI Site 4 PCB Contamination and Excavation Area ..... 25

3-5 Terra-Kleen Sampling Locations ..... 27


## Tables


2-1 NCP Evaluation Criteria for the Terra-Kleen Technology ..... 10

2-2 Federal and State ARARs for the Terra-Kleen Technology.. ..... 15

3-1 Maximum and Average Contaminant Concentrations ..... 24

3-2 PCB Aroclor 1260 Analytical Results ..... 31

3-3 Particle Size Distribution Analytical Results ..... 31

3-4 Oil and Grease Analytical Results ..... 32

3-5 Furan Analytical Results ..... 32

4-1 Costs Associated with the Terra-Kleen Technology ..... 38

# Acronyms, Abbreviations, and Symbols

| | |
|---|---|
| ug/kg | Micrograms per kilogram |
| ARAR | Applicable or relevant and appropriate requirement |
| bgs | Below ground surface |
| CAA | Clean Air Act |
| CERCLA | Comprehensive Environmental Response, Compensation, and Liability Act |
| CFR | Code of Federal Regulations |
| DDD | 4,4'-Dichlorodiphenyldichloroethane |
| DDE | 4,4'-Dichlorodiphenyldichloroethene |
| DDT | 4,4'-Dichlorodiphenyltrichloroethane |
| DUP | Duplicate |
| EPA | U.S. Environmental Protection Agency |
| GC | Gas chromatography |
| HMTA | Hazardous Materials Transportation Act |
| HxCDF | Hexachlorodibenzofuran |
| IRP | Installation Restoration Program |
| ITER | Innovative Technology Evaluation Report |
| kWh | Kilowatt hours |
| LDR | Land disposal restrictions |
| mg/kg | Milligrams per kilogram |
| mil | One thousandth of an inch |
| NASNI | Naval Air Station North Island |
| NCP | National Contingency Plan |
| NCS Stockton | Naval Communication Station Stockton |
| NELP | Navy Environmental Leadership Program |
| mm | Millimeter |
| mL | Milliliter |
| MS/MSD | Matrix spike/matrix spike duplicate |
| ORD | Office of Research and Development |
| OSHA | Occupational Safety and Health Administration |
| OSWER | Office of Solid Waste and Emergency Response |

## Acronyms, Abbreviations, and Symbols (continued)

| | |
|---|---|
| PAH | Polynuclear aromatic hydrocarbon |
| PRC | PRC Environmental Management, Inc. |
| PCB | Polychlorinated biphenyl |
| PCDD | Polychlorinated dibenzo-p-dioxin |
| PCDF | Polychlorinated dibenzo-p-furan |
| PeCDF | Pentachlorodibenzofuran |
| PPE | Personal protective equipment |
| ppm | Parts per million |
| QA/QC | Quality assurance/quality control |
| QAPP | Quality assurance project plan |
| RCRA | Resource Conservation and Recovery Act |
| SARA | Superfund Amendment and Reauthorization Act |
| SWDIV | Southwest Division, Naval Facilities Command |
| SITE | Super-fund Innovative Technology Evaluation |
| s v o c | Semivolatile organic compound |
| Terra-Kleen | Terra-Kleen Response Group, Inc. |
| TSCA | Toxic Substances Control Act |
| v o c | Volatile organic compound |

# Conversion Factors

| | *To Convert From* | *To* | *Multiply By* |
|---|---|---|---|
| Length | inch | centimeter | 2.54 |
| | foot | meter | 0.305 |
| | mile | kilometer | 1.61 |
| Area: | square foot | square meter | *0.0929* |
| | acre | square meter | 4,047 |
| Volume: | gallon | liter | 3.78 |
| | cubic foot | cubic meter | 0.0283 |
| Mass: | pound | kilogram | 0.454 |
| Energy: | kilowatt-hour | megajoule | 3.60 |
| Power: | kilowatt | horsepower | *1.34* |
| Temperature: | (“Fahrenheit - 32) | “Celsius | 0.556 |

The secondary objectives of the demonstration were as follows:

- Determine the characteristics ofuntreated soils that may affect technology performance (moisture content, particle size distribution, and oil and grease content)

- Determine if the Terra-Kleen technology removes volatile organic compounds (VOC), semivolatile organic compounds (SVOC), oil and grease, dioxins, and furans from soils

- Determine if, following treatment, the PCB concentration in the regenerated solvent is less than the TSCA incineration equivalent concentration for PCBs of 2 mg/kg to document that the solvent can be reused

- Document the operating conditions of the TerraKleen technology

- Estimate the capital and operating costs of treating soils and project additional capital and operating costs for full-scale operations

During the SITE demonstration, untreated and treated soils were analyzed for moisture content, particle size distribution, and oil and grease content because Terra-Kleen claims that these parameters may affect technology performance. According to Terra-Kleen, elevated levels of these parameters may increase the number of solvent extraction cycles required to reduce contaminants to concentrations below site-specific cleanup levels. Analyses of untreated soil at Site 4 indicated a moisture content of 0.83 percent (mass of water relative to total soil mass); a particle size distribution of 80 percent sand, 15 percent gravel, and 5 percent silt and clay; and an overall oil and grease concentration of 780 mg/kg. Under these soil conditions, the technology performance did not appear to be affected, since 11 solvent extraction cycles were required to reduce the PCB concentrations in soil to below the 2 mg/kg goal.

Untreated and treated soil also was analyzed for oil and grease, VOCs, SVOCs, dioxins, and furans to determine the ability of the Terra-Kleen technology to reduce the concentrations of these constituents. However, because the concentrations of VOCs, SVOCs, and dioxins were below the method detection limit in the untreated soil samples, the ability of the technology to remove these constituents could not be evaluated. The technology was effective in removing oil and grease and furans, specifically hexachlorodibenzofuran (HxCDF) and pentachlorodibenzofurans (PeCDF). Sampling results indicated that the technology removed 66.3 ± 5.47 percent of the oil and grease content, and reduced HxCDF and PeCDF by 92 ± 0.82 percent and 76 ± 5.28 percent, respectively.

Regenerated solvent was analyzed to determine its acceptability for reuse at other contaminated sites. Analytical results indicated that the PCB concentration in the solvent was below the method detection limit of 0.08 mg/kg. Since the PCB concentration in the solvent was less than the TSCA incineration equivalency concentration for PCBs of 2 mg/kg, the solvent was acceptable for reuse at other contaminated sites.

The operating conditions during the SITE demonstration were documented to identify general operational procedures. The only significant operational problem identified during the demonstration was the presence of residual solvent in treated soil following vacuum extraction and biological treatment. Although the concentration of contaminants in the residual solvent at this site was considered acceptable, it may be a concern at other sites since the presence of certain organic contaminants could cause additional handling problems and regulatory restrictions for managing treated soil.

Information obtained from the SITE demonstration was used to conduct an economic analysis to estimate treatment costs for the Terra-Kleen technology. The economic analysis is based on theoretical sites containing 500, 2,000, and 10,000 cubic yards of PCB-contaminated soil. The economic analysis yielded costs of $300, $210, and $170 per ton to treat 500, 2,000, and 10,000 cubic yards of soil, respectively. This unit cost includes the costs of remediation, site preparation, residuals shipping, handling, and disposal.

# Section 1
# Introduction

This section provides background information about EPA's Super-fund Innovative Technology Evaluation (SITE) Program, discusses the purpose of the Innovative Technology Evaluation Report (ITER), and describes the solvent extraction technology developed by Terra-Kleen Response Group, Inc. (Terra-Kleen). Additional information about the SITE Program, the Terra-Kleen technology, and the demonstration site is available from the key contacts listed in Section 1.4.

## 1.1 Brief Description of SITE Program and Reports

The SITE Program is a formal program established by EPA's Office of Research and Development (ORD) and Solid Waste and Emergency Response (OSWER) in response to the Superfund Amendments and Reauthorization Act of 1986 (SARA). The SITE Program promotes the development, demonstration, and implementation of new or innovative technologies to clean up Superfund sites across the country.

The primary purpose of the SITE Program is to maximize the use of alternatives in remediating hazardous waste sites by encouraging the development and demonstration of new or innovative treatment and monitoring technologies. The SITE Program consists of the following four programs: the Emerging Technology Program, the Demonstration Program, the Monitoring and Measurement Technologies Program, and the Technology Transfer Program.

### *The Emerging Technology Program*

The Emerging Technology Program involves pilot or laboratory testing of successfully proven, bench-scale technologies that are in the early stage of development. Successful technologies are encouraged to advance to the Demonstration Program.

### *The Demonstration Program*

The objective of the SITE Demonstration Program is to develop reliable performance and cost data on innovative technologies so that potential users may assess the technology's site-specific applicability. Technologies evaluated are either currently available or nearly available for remediation of Superfund sites. SITE demonstrations are conducted on hazardous waste sites under conditions that closely simulate full-scale remediation conditions, thus ensuring the usefulness and reliability of the information that is collected. Data collected are used to assess the performance of the technology, the potential need for pre- and posttreatment waste processing, potential operating problems, and the approximate costs. The demonstrations also enable evaluation of long-term risks and operating and maintenance costs.

Technologies for the SITE Demonstration Program are selected through annual requests for proposals and invitations to successful innovative technology developers. The ORD staff reviews the proposals to determine which technologies show the most promise for use at Superfund sites. Technologies chosen must be at pilot- or full-scale stage, must be innovative, and must have some advantage over existing technologies. Mobile technologies are of particular interest.

After EPA has accepted a proposal, cooperative agreements between EPA and the developer establish responsibilities for conducting the demonstrations and evaluating the technology. The developer is responsible for demonstrating the technology at the selected site and is expected to pay costs for transporting, operating, and removing the equipment. EPA is responsible for project planning, sampling and analysis, quality assurance and quality control, preparing reports, disseminating information, and transporting and disposing of treated waste material.

### *The Monitoring and Measurement Technologies Program*

Existing technologies that improve field monitoring and site characterizations are identified in the Monitoring and Measurement Technologies Program. This program supports new technologies that provide faster, more cost-effective contamination and site assessment data. The Monitoring and Measurement Technologies Program also formulates the protocols and standard operating procedures for demonstrating methods and equipment.

### *The Technology Transfer Program*

The Technology Transfer Program disseminates technical information on innovative technologies through various activities in the Emerging Technology, Demonstration, and Monitoring and Measurements Technologies Programs. These activities increase the awareness and promote the use of innovative technologies for assessment and remediation at Superfund sites. The goal of technology transfer activities is to develop communication among individuals who require up-to-date technical information.

The results of the Terra-Kleen technology demonstration are published in two documents: the SITE Technology Capsule and the ITER. The SITE Technology Capsule provides relevant information on the technology, emphasizing key features of the results of the SITE demonstration. Both the SITE Technology Capsule and the ITER are intended to be used by individuals making a detailed evaluation of the technology for a specific site and waste.

## 1.2 Innovative Technology Evaluation Report

An ITER provides information on a technology demonstrated under the SITE Program, and includes a comprehensive description of the demonstration and its results. The ITER is intended for use by EPA project managers, contractors, and other decision-makers for implementing specific remedial actions. The ITER is designed to aid decision-makers in evaluating specific technologies for further consideration as an applicable option in a particular cleanup operation and includes information on cost and site-specific characteristics, and also discusses advantages, disadvantages, and limitations of the technology. This report serves as a critical step in the development and commercialization of a treatment technology.

Each SITE demonstration evaluates the performance of a technology in treating a specific material. The characteristics of other materials may differ from the characteristics of the treated material. Therefore, a successful field demonstration of a technology at one site does not necessarily ensure that it will apply to other sites. Data from the field demonstration may require extrapolation for estimating the operating ranges in which the technology will perform satisfactorily. Only limited conclusions can be drawn from a single field demonstration.

## 1.3 Technology Description

The Terra-Kleen solvent extraction (Terra-Kleen) technology was developed to treat soils contaminated with polychlorinated biphenyls (PCB) and other organic constituents. The technology uses a proprietary extraction solvent at ambient temperatures to transfer organic contaminants from soil to a liquid phase. The organic-laden solvent is then filtered and passed through a proprietary purification unit to remove the organic contaminants from the solvent. The regenerated solvent is continuously recycled through the contaminated soil until a desired cleanup level is attained. Organic constituents concentrated in the solvent purification unit are disposed of offsite.

The Terra-Kleen proprietary extraction solvent is water soluble, and is nonchlorinated. The solvent is not considered a hazardous constituent under the Resource Conservation and Recovery Act (RCRA) or a hazardous substance under the Comprehensive Environmental Response, Compensation, and Liability Act (CERCLA). Contaminants are mobilized by the solvent, separating them from the soil: no compounds are created or destroyed during treatment.

A schematic diagram of the Terra-Kleen technology used for the SITE demonstration is shown in Figure l-l. The major components of the Terra-Kleen technology consist of the following:

- **Solvent extraction tanks (Tanks A, B, C, D, and E).** The solvent extraction tanks contain the soil throughout the treatment process. The tanks are manufactured from polyethylene or steel and vary in size depending on the amount of soil being treated. A polyethylene or canvas tarp covers the top of the solvent extraction tanks to contain any

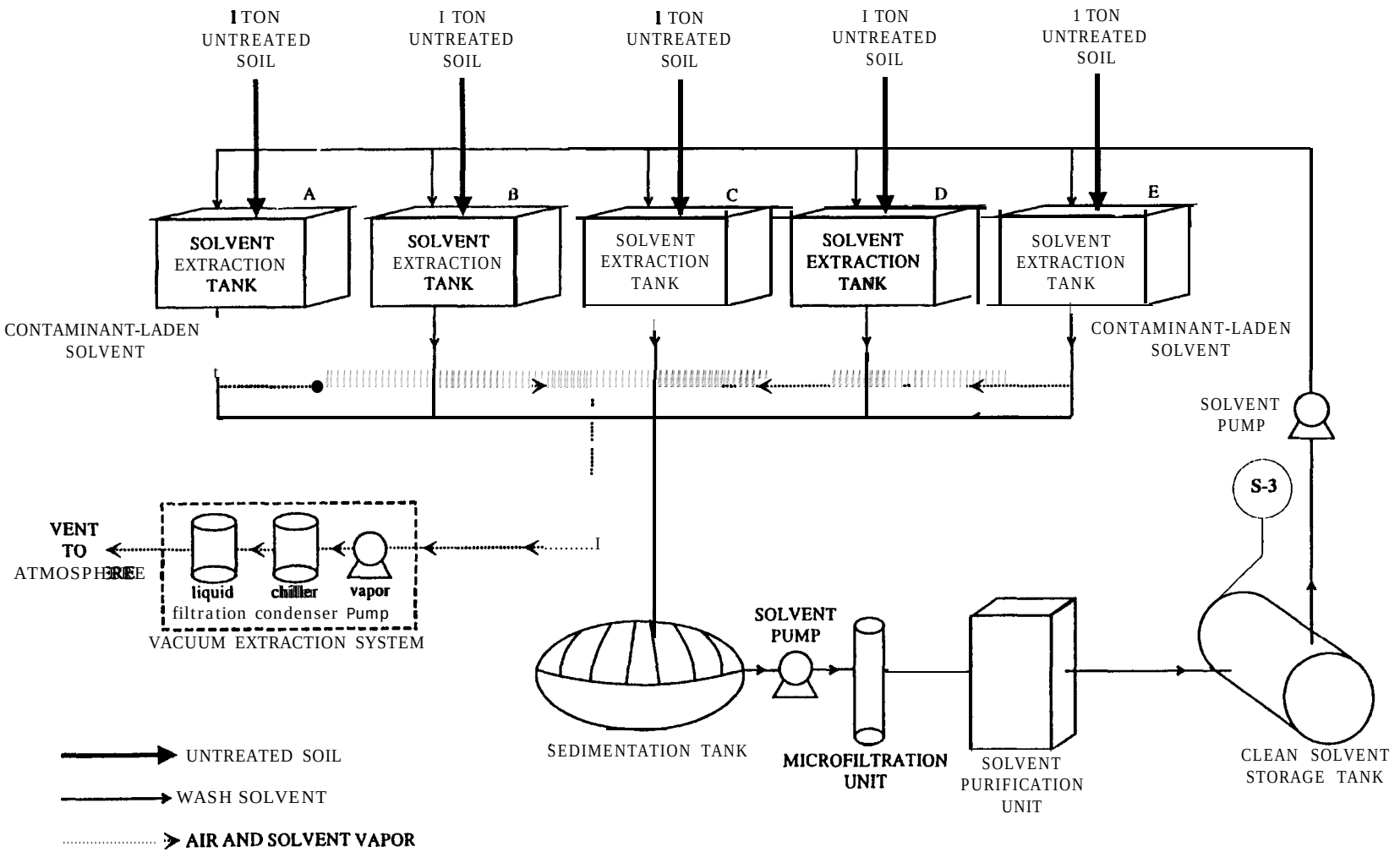


Figure I-I. Schematic diagram of the Terra-Kleen technology.

organic compounds volatilized during treatment and to keep out moisture.

- **Sedimentation tank.** The sedimentation tank removes suspended solids from the extracted solvent. The tank is manufactured from polyethylene or steel and varies in size depending on the amount of suspended solids expected in the extracted solvent.
- **Microfiltration unit.** The microtiltration unit removes small particulates from the extracted solvent. The unit is manufactured from steel and prevents solids from entering the solvent purification unit.
- **Solvent purification unit.** The solvent purification unit concentrates all organic soil constituents that have been extracted from the contaminated soil and yields a purified solvent suitable for recycle. The solvent purification unit is considered proprietary by the developer.
- **Clean solvent storage tank.** The clean solvent tank stores the purified solvent once it passes through the solvent purification unit. The tank is manufactured from polyethylene or steel and varies in size depending on the volume of solvent required for treatment.
- **Vacuum extraction system.** The vacuum unit removes the majority of the residual solvent from the soil following solvent extraction. The unit varies in size depending on the volume of soil being treated and the target level and time required to reduce residual solvent concentration in the treated soil.

The Terra-Kleen technology uses four steps in the treatment process: soil dewatering, soil treatment, solvent purification, and residual solvent removal. Each of these steps is described below.

### 1.3.1 Soil Dewatering

When processing exceptionally wet soils (those with a moisture content of about 15 percent or greater), the soil is dewatered before treatment. Typically, the feed soil is placed on plastic sheeting and dewatered through the natural processes of drainage and evaporation. When treating large quantities of soil with this procedure, the addition of a vapor collection system and a vacuum pump is necessary. The water drained off of this soil is collected in a moisture trap and passed through a carbon filter to remove remaining particulates and contaminants before being stored in a water tank for later utilization during final residual solvent removal. The excess volatile organic compounds (VOC) and water vapor which result from the evaporation process are drawn through an activated carbon filter before discharged to air.

Moisture content may be further reduced by using a vacuum to draw air through untreated stockpiled soil prior to placing the soil on plastic sheeting. Dewatering continues until Terra-Kleen determines that the soil is suitable for processing. Soil dewatering was not necessary during the SITE demonstration of the Terra-Kleen technology since soil at the demonstration site contained less than 2 percent moisture; therefore, the effectiveness of the system to reduce soil moisture was not evaluated.

### 1.3.2 Soil Treatment

Soil is treated in the solvent extraction tanks. For the pilot-scale SITE demonstration, five polyethylene tanks measuring 4 feet by 4 feet and 4 feet deep were used as solvent extraction tanks. When operating a full-scale technology, soil is typically treated in several plastic-lined roll-off containers that measure 22 feet by 8 feet and hold about 20 cubic yards of soil. After the soil is transferred to the tanks, solvent is pumped from the clean solvent storage tank into the top of each solvent extraction tank. The solvent extraction tanks are then covered and sealed to eliminate contaminant and solvent loss during the extraction process. Once in contact with the soil, the solvent mobilizes the soil contaminants. For the SITE demonstration, each extraction required about 100 gallons (380 liters) of solvent per tank which remained in contact with the soil for about 30 to 45 minutes. The organic-laden solvent (extracted solvent) is then drained from the solvent extraction tanks.

### 1.3.3 Solvent Regeneration

The solvent regeneration process is designed to remove extracted organic contaminants and solid particles from the solvent. This step generally consists of three unit operations: sedimentation, filtration, and contaminant removal. The sedimentation tank removes suspended solids from the extracted solvent, which is then pumped through the microfiltration unit to remove small particulates before it enters a proprietary solvent purification unit, where PCBs and other organic contaminants are removed. According to Terra-Kleen, should excess water remain following an incomplete dewatering procedure (resulting in a soil moisture content greater than 15%), dilution of the

recovered solvent could occur and result in the use of additional solvent extraction cycles to reduce contaminant concentrations to below site-specific clean up levels. The extraction efficiency of diluted solvent was not evaluated since the demonstration untreated soil only contained a moisture content of 0.83 percent (mass of water relative to soil mass).

When treating medium- to large-grained sands, the sedimentation operation is not used because these particles are not carried out of the solvent extraction tanks in large concentrations. In such cases, solvent is pumped directly into the microfiltration unit before entering the solvent purification unit. During the SITE demonstration, Terra-Kleen eliminated the sedimentation step, and used the sedimentation tank to control the flow of solvent through the microfiltration and solvent purification unit. However, should the sedimentation step be necessary, the solids which collected at the bottom of the tank could be disposed of off-site at a RCRA approved facility using standard maintenance and disposal procedures.

Following regeneration, the solvent is pumped into the clean solvent storage tank, where it is stored before reuse in the next extraction cycle. Terra-Kleen bases the number of extraction cycles for a given soil volume on the physical properties and contaminant concentrations of the untreated soils. Extraction cycles are repeated until the contaminant concentrations in the soil within the solvent extraction tank are less than the site-specific cleanup level, as measured by an on-site GC unit.

### *1.3.4 Residual Solvent Removal*

Following treatment, residual solvent is removed from soil using vacuum extraction and biological treatment. The majority of the residual solvent is removed by vacuum; air is drawn through the soil from air lines connected to the bottom of the solvent extraction tanks. The solvent vapor and air drawn from the treated soil passes through a condenser. The condenser transfers the solvent vapor into a liquid phase and air emissions are bubbled through a water scrubber to remove any residual solvent. The solvent is pumped through the solvent purificationunit to remove organic contaminants; the clean solvent is then pumped to the clean solvent storage tank (Figure 1- 1).

Following vapor extraction, an active biological culture is introduced to the treated soil in each of the solvent extraction tanks, initiating biodegradation of any remaining solvent. Biological treatment removes residual solvent to trace levels. Current modifications to the Terra-Kleen vacuum extraction equipment incorporate a larger blower, conventional refrigeration unit, and a noncontact heat exchanger to (1) improve solvent vapor recovery, (2) increase the removal efficiency of the residual solvent in treated soil, (3) reduce vacuum extraction operating time, and (4) eliminate solvent vapor emissions.

## 1.4 Key Contacts

The following sources can provide additional information on the SITE Program, the technology, and the demonstration site. Mr. Mark Meckes, the U.S. EPA SITE Project manager, also can be contacted concerning questions on QA/QC procedures.

**The SITE Program**
Annette Gatchett - SITE Program Manager
U.S. Environmental Protection Agency
National Risk Management Research Laboratory
26‘West Martin Luther King Drive
Cincinnati, OH 45268
5 13-569-7697

Mark C. Meckes - SITE Project Manager
U.S. Environmental Protection Agency
National Risk Management Research Laboratory
26 West Martin Luther King Drive
Cincinnati, OH 45268
5 13-569-7348

**Terra-Kleen Response Group, Inc.**
Alan Cash - President
Terra-Kleen Response Group, Inc.
PO Box 2054
Del Mar, CA 92014
619-558-8762
E-Mail acash@ix.netcom.com

**Naval Air Station North Island**
Ken Mitchell -Public Affairs Officer
Naval Air Station North Island
Building 605
San Diego, CA 92 135
619-545-8167

Information on the SITE Program is also available through the Cleanup Information Bulletin Board System by calling

the system operator at 301-589-8368 or through a modem at 301-589-8366.

A limited number of technical reports are available by writing the Center for Environmental Research Information, at 26 West Martin Luther King Drive, Cincinnati, Ohio 45268, or by calling 800-490-9198.

# Section 2
# Technology Applicability

This section of the ITER addresses the general applicability of the Terra-Kleen technology to contaminated waste sites. Information presented in this section is intended to assist decision-makers in screening specific technologies for a particular cleanup situation. The section presents the advantages, disadvantages, and limitations of the technology and discusses factors that have a major impact on the performance and cost of the technology. The analysis is based primarily on the results of the SITE demonstration at NASNI and is supplemented by information from the SITE treatability study and a full-scale remediation.

## 2.1 Technology Performance Compared to National Contingency Plan Evaluation Criteria

Table 2-1 compares performance of the Terra-Kleen technology with the National Contingency Plan (NCP) evaluation criteria found in Title 40 of the Code of Federal Regulations (40 CFR), Part 300. The following subsections discuss these criteria.

### *2.1.1 Overall Protection of Human Health and the Environment*

Based on the results of the SITE demonstration and subsequent full-scale operations, the Terra-Kleen technology is capable of reducing concentrations of PCBs, oil and grease, furans, and chlorinated pesticides in contaminated soils. Based on the results of the pre- and posttreatment sampling and analysis during the SITE demonstration, the Terra-Kleen technology was able to reduce the concentration of PCBs in contaminated soils by 98.8 ± 0.1 percent, and the treated soils met the Toxic Substance Control Act (TSCA) incineration equivalency concentration for PCBs in soil of 2 milligrams per kilogram (mg/kg). In addition, the technology reduced the concentrations of hexachlorodibenzofuran (HxCDF) by 92 ± 0.82 percent and pentachlorodibenzofuran (PeCDF) by 76 ± 5.28 percent. Oil and grease concentrations were reduced by 66.3 ± 5.47 percent.

Samples collected during full-scale remedial operations of the Terra-Kleen technology at Naval Communication Stockton (NCS Stockton) showed that the technology is capable of removing 99 percent of the pesticides 4,4'-Dichlorodiphenyldichloroethane (DDD), 4,4'-Dichlorodiphenyldichloroethene (DDE), and 4,4'-Dichlorodiphenyltrichloroethane (DDT) in soils with up to 15 percent clay particles. Appendix B discusses the results of the evaluation of this full-scale application of the Terra-Kleen technology.

Terra-Kleen also claims that comparable removal efficiencies of 99 percent and greater are obtainable for soil contaminated with organic constituents, including petroleum hydrocarbons, chlorinated hydrocarbons, polynuclear aromatic hydrocarbons (PAH), and dioxins. However, these constituents were not evaluated during the SITE demonstration.

Operation of the technology poses no known hazards to the environment or human health. The technology currently operates as a closed loop system and has operated at full scale under a permit from the San Diego Regional Air Authority, one of the nation's strictest air compliance districts. Dust controls may be required during excavation and transfer of arid soils to prevent migration of wind-borne particulates. Health risks to personnel using the Terra-Kleen technology can be controlled by using hard hats, steel-toed boots, overalls, disposable gloves, and safety glasses. Respiratory protection may be required depending on the concentration and identity of contaminants in untreated soil, and is required for personnel working near solvent feedstocks. According to Terra-Kleen, if primary and

**Table 2-I.** NCP Evaluation Criteria for the Terra-Kleen Technology

| Criteria | Evaluation | | |
|---|---|---|---|
| Overall Protection of Human Health and the Environment | Protects human health and the environment by eliminating exposure to contaminants in soil | Prevents further contamination of groundwater and off-site migration by removing contaminants from soil | Requires measures to protect workers and community during excavation, handling, and treatment of soil |
| Compliance with Federal ARARs | Requires compliance with RCRA treatment, storage, and disposal regulations of a hazardous waste | Capable of meeting the TSCA incineration equivalency concentration for PCBs of 2 mg/kg | Waste residuals generated at the conclusion of treatment may require compliance with ARARs |
| Long-Term Effectiveness and Permanence | Effectively removes PCBs, PCDF, and oil and grease from soil; treated waste could be handled as waste material; site may be suitable for reuse | Provides irreversible treatment of contaminated soil | Involves some residual treatment or disposal (purification media and regenerated solvent) |
| Reduction of Toxicity, Mobility, or Volume Through Treatment | Significantly reduces the concentration of PCBs and other organic contaminants in soil | Reduces the toxicity of the soil by removing PCBs to acceptable levels | Reduces PCDFs and oil and grease in soil |
| Short-Term Effectiveness | Presents potential short-term risks to workers and community including exposure to noise and contaminants released to the air during excavation and handling | Short-term risks are readily manageable through common site health and safety practices | Achieves cleanup objectives in fairly short amount of time |
| Implementability | May require pretreatment of soil for particle size distribution and moisture content | High clay content in soil can cause additional extraction cycles: technology is limited by cold or freezing weather | Equipment is transportable and is also available through local vendors; mobilization and demobilization each take about 1 to 2 weeks |
| Cost | $170 to $300 per ton; this includes the cost of remediation and preparing the site | Significant cost items include equipment, proprietary solvent, and residual management | Disposal costs are reduced by concentrating the PCBs and other organics in the solvent purification unit |
| Community Acceptance | Minimal and manageable short-term risks to the public may increase community acceptance | Permanence and long-term effectiveness of the technology may increase community acceptance | Use of a solvent that is not considered a hazardous substance under CERCLA or a hazardous constituent under RCRA may increase acceptance |
| State Acceptance | Provides a permanent solution to contamination that is preferable to other soil remediation technologies | State regulatory authorities may require that certain permits be obtained before implementing the technology, if conducted as part of a RCRA corrective action; examples include a permit to operate a treatment system, and a permit or approval to potentially store | The technology received a TSCA national operating permit for treating PCB-contaminated soil |

secondary containment of the clean solvent and treatment solvent extraction tanks fail, the solvent readily biodegrades into inert components with an estimated environmental half-life of 2 to 3 days in the presence of water and air.

### 2.1.2 Compliance With Applicable or Relevant and Appropriate Requirements

ARARs for the Terra-Kleen technology may include requirements under TSCA if the waste contains PCBs. During the demonstration, the Terra-Kleen technology was able to treat PCB-contaminated soils from more than 50 mg/kg (the regulatory threshold under TSCA) to less than the TSCA incineration equivalency concentration for PCBs in soil of 2 mg/kg. Based on the results of the demonstration and other full-scale applications of the technology, EPA's Office of Pollution Prevention and Toxics (OPPT) issued Terra-Kleen anationwidepermit to treat PCBs with both the pilot- and full-scale units.

Other potential ARARs for the Terra-Kleen technology include hazardous waste regulations under RCRA. Although the Terra-Kleen technology has not yet been used to treat RCRA hazardous wastes, the ability of the Terra-Kleen technology to treat soils contaminated with chlorinated pesticides was evaluated as part of full-scale remedial activity at NCS Stockton. The results of this remediation indicated a 99 percent reduction in DDT, DDD, and DDE concentrations. These results suggest that other regulated chlorinated organic contaminants may be successfully treated by the Terra-Kleen technology.

The Terra-Kleen technology generates process residuals that must be managed in accordance with applicable regulations under RCRA and TSCA. Residuals include solids from the sedimentation tank, spent media from the purification unit, treated soils, and solvent. The appropriate disposal method for these residuals will be determined by the origin, identity, and concentration of their contaminants.

Purification media will contain concentrated organic substances and contaminants. The media is generally incinerated, but in some cases can be recycled. For some applications, the contaminants and organics will be concentrated in this media which can then be transported off-site for incineration; when this process is necessary, it constitutes the highest cost item for the waste residuals.

Solvents regenerated during the technology demonstration contained less than 0.08 mg/kg of PCB (the method detection limit). These concentrations exempted the solvents from being listed as PCB-contaminated, thus making the solvent available for potential re-use in other applications. Site-specific decisions and contaminant concentration will determine whether these solvents are stored for reuse, recycled, or disposed of as waste.

If treated soils meet all site-specific criteria for on-site replacement, they can be placed back into the excavation. When soil contaminants are regulatory mixed wastes, or a combination of extractable and nonextractable contaminants, some regulated contaminants may remain in the treated soils. For these instances, the Terra-Kleen technology facilitates segregation of waste types and media to optimize final disposal options.

Some solvent may remain in the treated soils following treatment and should be considered in deciding the final disposition of treated soil. The allowable amount of residual solvent will be determined on a site-by-site basis. Current modifications to the Terra-Kleen technology enable the developer to control these residuals more effectively than was possible during the SITE demonstration at the NASNI site. The solvent itself is not a hazardous substance under CERCLA or a hazardous constituent under RCRA. If disposed of as a waste, however, it does exhibit a RCRA ignitable hazard characteristic and would be classified accordingly.

Occupational standards for workers at hazardous waste sites listed in the Occupational Safety and Health Administration (OSHA) guidelines (OSHA 19 10.420) are applicable to operators of the Terra-Kleen technology. Risks to workers during remediation activities include those from emissions, solvent stocks, and direct contact with contaminated soils. Risks from solvent emissions and soil contaminants can usually be addressed through use of an air purifying respirator. Minimal personal protective equipment (PPE) for remediation activities with the Terra-Kleen technology will include a hard hat, steel-toed boots, safety glasses, and overalls. Additional PPE may be required, depending on contaminant identity and concentration.

### 2.1.3 Long-Term Effectiveness and Permanence

During the demonstration, some solvent residuals and extracted contaminants in solution remained in the soil after

treatment was complete. Solvent residuals could pose a problem for some remedial sites, but recent modifications to the Terra-Kleen vacuum extraction system enable more effective reduction of solvent residuals.

Based on analysis of treated soils from the demonstration, the contaminants in the residual solvent were not sufficient to compromise the remedial goals for PCBs or solvent residuals. In normal practice, site-specific remedial goals will determine what residual concentrations are acceptable. Treatability tests conducted before remediation can establish which technology configuration and operating parameters must be established to meet site-specific requirements.

### 2.7.4 Reduction in Toxicity, Mobility, or Volume through Treatment

Because the Terra-Kleen technology is a physical separation procedure, the change in soil toxicity is permanent and is generally proportional to the contaminant concentration remaining at the conclusion of treatment. Accordingly, since the concentration of PCBs in the soil was reduced by an average of 98.8 ± 0.1 percent, and the concentrations of HxCDF and PeCDF were reduced by 92 ± 0.82 percent and 76 ± 5.28 percent, respectively, a decrease in toxicity attributable to these substances is assumed. In general, the Terra-Kleen technology will not alter the structural or chemical nature of contaminants, or their toxicity characteristics.

Leachate tests confirmed that the PCB concentrations in the treated soil were below method detection limits. While not a definitive test, this result infers that residual PCBs in the treated soil will not continue to leach following treatment. Since soil contaminants are often present in association with a carrier fluid (PCBs in oil, pesticides in petroleum bases), treatment by solvent extraction should significantly reduce contaminant mobility resulting from the removal of the chemical transport media.

Reductions of waste volume achieved by the Terra-Kleen technology depend on the original concentration and distribution of the contaminant, natural soil organic content, and volume of contaminated soil to be treated. The potential reduction of waste is a ratio between the original volume of contaminated soil and the waste residuals created by the Terra-Kleen technology. The predominant waste residual generated by the technology is spent purification media. The purification media concentrates all extractable organic soil constituents, not just the contaminants, that have been removed from the soil by the solvent. The limited scale of the SITE demonstration did not enable the solvent purification unit to optimize its contaminant concentration, but the full-scale operation at NCS Stockton provides an example of potential reductions in waste volume. About 1 ton of purification media was generated during treatment of 400 cubic yards (550 tons) ofcontaminated soil, yielding a waste volume reduction of 550: 1.

The waste purification media are typically incinerated due to the high concentration of organic contamination. In some cases, it is possible to regenerate the purification media which would increase the waste volume reduction ratio since the volume of waste residual would not include the media itself.

### 2.1.5 Short-Term Effectiveness

The Terra-Kleen technology can take from 3 hours (for small sites with easily extracted contaminants) to several days or months to remove contaminants depending on the characteristics and volume of material to be treated. The technology can be configured in accordance with site-specific requirements to optimize time and reduce cost. The treatment process is a physical separation process that is irreversible once it is implemented.

The number of extraction cycles and the time required to treat contaminated soil depends on contaminant concentrations, moisture content, particle size, natural organic content, and other chemical contaminants that are present. The remediation goal for the SITE demonstration (2 mg/kg of PCBs) was achievedusing 11 wash cycles, with each extraction cycle requiring about 3 hours, conducted over a period of 7 days. Residual solvent removal through vacuum extraction and biological treatment continued for an additional 2 weeks.

The full-scale unit at NCS Stockton required three extraction cycles, and 3 days to treat one extraction tank (about 20 cubic yards) of soil. Nineteen roll-off tanks were used and several months were required to complete all the solvent extraction and vacuum extraction cycles, which resulted in treating a total of 550 tons of soil. Initially, 1 week was needed for vacuum extraction of residual solvent from each solvent extraction tank. With the current technology modifications, this process is reduced to 3 days, with the capacity to simultaneously treat three solvent extraction tanks.

### 2.7.6 Implementability

Assembly and operation of the Terra-Kleen technology involves the use of general soil handling, construction, industrial, and monitoring equipment. The extraction tanks and solvent purification unit can be prefabricated or assembled on site. The full-scale refrigeration-condenser unit and the vacuum extraction-heat exchanger are available through an independent supplier, but can be shipped on reasonably short notice. No treatment delays occurred during the demonstration, but the vacuum extraction process was modified to improve residual solvent removal. Equipment acquisition caused some delays.

The availability of Terra-Kleen technical staff has not been a limiting factor for operations, but may change with increased demand. Terra-Kleen may provide training in the future for facilities purchasing and operating the Terra-Kleen technology.

Although the Terra-Kleen technology as demonstrated achieved the primary demonstration objective, the variables associated with soils, contaminants, and site restrictions may yield different results at other sites. Terra-Kleen recommends conducting treatability studies routinely for each type of contaminant and soil under consideration for treatment. Terra-Kleen routinely conducts treatability studies and limited pilot-scale operations to verify treatment efficiency before implementing full-scale remediations.

### 2.1.7 Cost

The cost of implementing the Terra-Kleen technology to remediate a site with PCB-contaminated soils was estimated for three different volumes of contaminated soil, and ranged from $170 per ton to $300 per ton. Section 4.0 presents a comprehensive discussion of the analysis used to develop these cost estimates.

### 2.1.8 Community Acceptance

Community acceptance of the Terra-Kleen technology has been relatively positive because this technology does not involve combustion processes or placement of wastes on land. However, community concern was expressed during the SITE demonstration regarding exposure to fugitive particulate and VOC emissions during transport, handling, and treatment of contaminated soil. These exposures can be reduced through dust emission and soil handling controls.

Fire safety may arise as a public concern. However, fire prevention codes require the use of spark-proof equipment and insulated wiring for the Terra-Kleen technology. Due to the addition of the noncontact heat exchanger to warm recycled air, temperature warning sensors have been integrated into the operating system to ensure safe handling and operation in the presence of flammable solvent and vapors.

Community environmental groups were invited to comment on the SITE demonstration during the planning and implementation of work. Public response was generally supportive.

### 2.1.9 State Acceptance

The SITE demonstration was approved by the California Department of Toxic Substance Control Office of Pollution Prevention and Technology Development, as well as other local and regional agencies. Approval of other applications of the Terra-Kleen technology are contingent upon approvals required under individual state-approved programs implementing RCRA, TSCA, and the Clean Air Act (CAA).

Subsection 2.2 further discusses the ability of the Terra-Kleen technology ability to meet potential regulatory requirements under these laws.

## 2.2 Technology Performance Compared to ARARS

This subsection discusses specific environmental, health and safety, and other regulations pertinent to the operation of the Terra-Kleen technology. These regulations include those governing the storage, treatment, transportation, and disposal of untreated soils and treatment residuals. Remedial project managers also have to address state and local regulatory requirements, which may be more stringent. ARARs discussed in this subsection include provisions under the following bodies of legislation:

- RCRA
- CAA
- TSCA
- OSHA

- Hazardous Materials Transportation Act (HMTA)

Table 2-2 identifies and discusses specific federal ARARs that may apply to the Terra-Kleen technology.

### 2.2.1 Resource Conservation and Recovery Act

Personnel using the Terra-Kleen technology may be subject to hazardous waste management standards if soils are hazardous wastes as defined under RCRA. RCRA management requirements include those for persons who generate, transport, treat, store, or dispose of hazardous wastes. Wastes defined as hazardous under RCRA include characteristic and listed wastes. Personnel using the Terra-Kleen technology must classify the wastes to determine whether they are listed or characteristic wastes. Criteria for identifying characteristic hazardous wastes are included in 40 CFR 261C.

Listed wastes from specific and nonspecific sources, off-specification products, and spill residues are described in 40 CFR 261 D. Facilities that manage hazardous wastes are required to obtain an EPA identification number. Persons who generate hazardous waste are subject to regulations for hazardous waste.

After contaminated soils or sludges have been treated by the Terra-Kleen technology, the treated soils will normally remain subject to RCRA hazardous waste or state solid waste regulations. Most hazardous wastes generated by the Terra-Kleen technology are subject to the RCRA land disposal regulations (LDR) under RCRA in 40 CFR 268. For example, residuals must normally be treated to meet treatment standards expressed in terms of concentrations in the waste or in a waste extract (see 40 CFR 286 D). Applicable RCRA requirements also include the following:

- Manifest requirements if the treated soils are transported off site (see 40 CFR 262 D, and 263)
- Permits for storing treated soils longer than allowable accumulation times (generally 90 days)
- Unit-specific requirements for treatment, storage, and disposal units (see 40 CFR 264 and 265)

For example, tanks used in the Terra-Kleen technology may be subject to design and operating standards (such as secondary containment) in 40 CFR part 265 J. Nonhazardous wastes generated by the Terra-Kleen technology must be disposed of in accordance with applicable state regulations governing solid waste.

### 2.2.2 Clean Air Act

Emissions from the Terra-Kleen technology include VOCs and particulate matter. The CAA requires states to implement a program that requires new sources of air pollutants to obtain permits. Most states have requirements to obtain preconstruction and operating permits for sources of air pollutants. Although the Terra-Kleen technology may be below minimal permitting thresholds for such permits, it is necessary to check with the state permitting authority under which the system is operating.

The CAA also requires that major sources that emit more than specified thresholds of VOCs, particulate matter, and other air pollutants submit applications for a Title V permit. Most states are currently in the process of implementing Title V permit programs. During the excavation, transportation, and treatment of soils, fugitive emissions are possible. State air quality standards may require additional measures to prevent fugitive emissions.

### 2.2.3 Toxic Substances Control Act

PCB regulations have been issued under the authority of Section 6(e) of TSCA. Regulations for PCB treatment and disposal are listed in 40 CFR 76 1. Wastes containing PCBs in concentrations of 50 to 500 parts per million (ppm) may be disposed of in TSCA-permitted landfills or incinerated at a TSCA-approved incinerator; wastes containing PCBs in concentrations greater than 500 ppm must be incinerated. As a matter of policy, EPA also currently requires that a facility meet the incinerator equivalency performance standard of 2 ppm for PCBs in soil to obtain a permit for a treatment or disposal method other than land filling or incineration.

PCB spills occurring after May 4, 1987 must be addressed under the PCB Spill Cleanup Policy in 40 CFR 761 G. The policy applies to spills with PCB concentrations greater than 50 ppm and establishes cleanup protocols for addressing such releases based on the volume and concentration of the spilled material.

Table 2-2. Federal and State ARARs for the Terra-Kleen Technology

| Demonstration Activity | ARAR | Description | Basis | Response |
|---|---|---|---|---|
| Waste Excavation | RCRA 40 CFR part 262 or state equivalent | Standards that apply to generators of hazardous waste | The soils are excavated for treatment and are therefore subject to regulation | Obtain EPA ID number; prepare contingency plan and preparedness and prevention plan |
| Storage before treatment | RCRA 40 CFR part 264 or 265 or state equivalents | Standards that apply to storage of hazardous wastes in tanks | The waste is stored in a tank before processing | Inspect tanks daily and maintain in good condition; provide secondary containment for new tanks |
| Waste treatment | RCRA 40 CFR part 264 or 265 or state equivalents | Standards that apply to or treatment of hazardous waste | Soils are treated in a tank | Inspect tanks daily and maintain in good condition; provide secondary containment for new tanks |
| Waste characterization | RCRA 40 CFR part 261 or state equivalent | Standards that apply to waste characterization | Need to determine if excavated waste, treated waste, and residuals are RCRA hazardous waste | Use knowledge of processes that generate waste or test waste before disposal |
| Storage after processing | RCRA 40 CFR part 264 or 265 or state equivalents | Standards that apply to storage of hazardous waste | Treated waste will be stored in tanks before a decision on final disposition | Inspect tanks daily and maintain in good condition; provide secondary containment for new tanks |
| Transportation for off-site disposal | RCRA 40 CFR part 262; HMTA 49 CFR 172 | Manifest, marking, packaging, labeling, and placarding requirements before transport | If hazardous, treatment residuals must be manifested and managed as hazardous waste | Prepare manifest, properly mark and label all containers |
| Transportation for off-site disposal | RCRA 40 CFR part 263 or state equivalent | Transportation standard | If hazardous, treatment residuals must be manifested and managed as hazardous waste | Use an EPA-licensed transporter for off-site disposal |
| Off-site disposal | SARA Section 121 (d)(3); RCRA 40 CFR part 262 or state equivalent | Requirement for off-site disposal of Superfund site wastes | Waste is generated from a response action authorized under SARA | Dispose of waste at a RCRA-permitted, interim status, or approved recycling facility if residual waste is hazardous |
| Off-site disposal | TSCA 40 CFR part 761 | Treatment and disposal requirements for PCBs | Waste material contains PCBs in excess of 50 ppm | Dispose of PCB waste with concentrations greater than 50 ppm in a TSCA-approved landfill or incinerator |

Notes: HMTA - Hazardous Materials Transportation Act
SARA - Super-fund Amendment and Reauthorization Act
CFR - Code of Federal Regulations

In March 1996, the EPA Office of Pollution Prevention and Toxics issued Terra-Kleen a national operating permit for treating PCBs under the TSCA provisions. Terra-Kleen is the first technology alternative to incineration or land filling to obtain this certification.

### 2.2.4 Occupational Safety and Health Act

CERCLA remedial actions and RCRA corrective actions must be performed in accordance with OSHA requirements detailed in 29 CFR parts 1900 to 1926, especially 19 10.120, which provides for the health and safety of workers at hazardous waste sites. These regulations require such workers to undergo 40 hours of health and safety training before entering a RCRA corrective action or CERCLA remedial action site. On-site construction activities at CERCLA response or RCRA corrective action sites must be performed in accordance with OSHA regulations at 29 CFR 1926, which provides health and safety regulations for construction sites. State OSHA requirements may be more strict than federal standards, and must be observed when applicable.

For most sites, minimum PPE for technicians operating the Terra-Kleen technology will include gloves, hard hats, steel-toed boots, and coveralls. Depending on contaminant types and concentrations, additional PPE may be required. Noise levels must be monitored to ensure that workers are not exposed to noise levels above a time-weighted average of 85 decibels over an 8-hour day. Operation of the Terra-Kleen technology is not expected to exceed this limit; however, should the technology or equipment operating in the vicinity cause noise levels to exceed this limit, workers are required to wear ear protection.

### 2.2.5 Hazardous Materials Transportation Act

If residuals from the Terra-Kleen technology are to be transported off site, HMTA contains requirements for these materials while they are in transit. Containers and transport vehicles may be required to be marked and labeled in accordance with regulations in 49 CFR 172 C and D, respectively. Transport vehicles also must be placarded as specified by regulations in 49 CFR 173 E. In addition, the shipment must be accompanied by a shipping paper as specified in 49 CFR 172 C if the material is not defined as a RCRA hazardous waste.

## 2.3 Operability of the Technology

The Terra-Kleen technology equipment mainly consists of solvent extraction tanks, a sedimentation tank, a microfiltration unit, a solvent purification unit, a clean solvent storage tank, and a vacuum extraction system. The entire system is transportable and can be configured to treat soil volumes ranging from a few cubic yards to the much larger volumes typically generated at hazardous waste sites. Pilot-scale units have been tested with l-ton and 5-ton treatment capacities. The full-scale unit has been testedwith about 550 tons of soil. Many of the technology components are available from local vendors throughout the United States.

Once installed and balanced, the Terra-Kleen technology requires minimal support from on-site personnel. Tasks involved in operating the Terra-Kleen technology include assembling equipment, loading and unloading soil, pumping solvent into the extraction tanks, sampling extraction solvent, and sampling untreated and treated soil. Two people can usually assemble the equipment within 2 weeks for both pilot- and full-scale units if all necessary facilities, utilities, and supplies are available. Typically, the pilot-scale unit requires one operator and the till-scale unit requires two operators to monitor treatment progress.

Since much of the process operates at ambient temperature and the soils are not moved once they are loaded into the solvent extraction tanks, mechanical difficulties are limited. However, the developer performs routine maintenance and inspection of the Terra-Kleen technology during remediation activities. Items inspected during routine maintenance included solvent pumps, hose connections, and fittings.
To ensure that the technology is capable of achieving the desired remedial goals, treatability tests are recommended before full-scale remediation. Site-specific cleanup levels, soil particle size, moisture, and humic content are the primary determinants for the number of extraction cycles and the effort required to remediate a specific soil type. For example, results from the full-scale remediation indicate that in three solvent extractions, the Terra-Kleen technology reduced chlorinated pesticides in soil from 80.0 mg/kg to 0.093 mg/kg. By contrast, 57 solvent extractions were required during the SITE treatability study to reduce PCB concentrations from 640 mg/kg to 6.0 mg/kg in a soil with high humic content and 14.5 percent clay and fines.

According to Terra-Kleen, optimal soil conditions for soil treatment include soil containing less than 15 percent clay and less than 15 percent moisture content. As a result,

pretreatment of soils may be necessary to reduce clay aggregate size and moisture content. One pretreatment option is screening and drying soils using vacuum extraction. The Terra-Kleen technology does not normally require screening of large soil particles or objects (large rocks and debris over 18 inches) before treatment; however, this material should be removed before treatment if it poses handling problems during loading and unloading of soil. Because the Terra-Kleen technology is a batch process, these materials can still be treated; however, it is advisable to treat them separately.

## 2.4 Applicable Wastes

The Terra-Kleen technology used for the SITE demonstration was designed to remove PCBs from contaminated soil. The developer claims that the technology can also remove petroleum hydrocarbons, chlorinated hydrocarbons, pesticides, PAHs, polychlorinated dibenzo-*p*-dioxins (PCDD), and polychlorinated dibenzo-*p*-furan (PCDF). This report documents that the technology can effectively remove PCBs, chlorinated pesticides, PCDF, and oil and grease from contaminated soils. Additionally, the developer claims that in some cases the Terra-Kleen technology is capable of removing solvent- soluble metals from contaminated soil following mixture with extraction agents.

## 2.5 Material Handling Requirements

The material handling requirements for the Terra-Kleen technology include managing spent solvent, treated soil, spent purification media, and decontamination wastes. About 1,100 gallons of solvent was used for the SITE demonstration. Of this original quantity, about 930 gallons of solvent was recovered at the end of the demonstration. Most unrecovered solvent remained as soil residuals and in the bottoms of the solvent extraction tanks andpipelines. During the SITE demonstration, the concentration of PCBs in the purified solvent was 0.08 mg/kg. Because this PCB concentration was below the TSCA incineration equivalency concentration for PCBs of 2 mg/kg, the residual solvent from the Terra-Kleen technology was suitable for reuse, eliminating any disposal costs.

Other residuals include treated soil and spent purification media. If applicable regulatory restrictions and treatment goals have been achieved, treated soils can be backfilled on the site. The environmental half-life of the Terra-Kleen solvent is estimated to be 2 to 3 days in the presence of air and water. This can be reduced with land farming and enhanced biodegradation. The spent purification media will normally need to be disposed of as hazardous or nonhazardous waste, depending on the source of the material that was treated or the concentration of hazardous constituents in the spent purification media.

Wastes are generated during soil loading, sampling, and demobilization activities. Typically, the wastes generated by the Terra-Kleen technology include decontamination water and plastic used to contain water when decontaminating excavation equipment. The amount of water required to decontaminate equipment is discussed in Section 2.6.

## 2.6 SITE Support Requirements

The site support requirements for the Terra-Kleen SITE demonstration included space to set up the unit, support equipment, and utilities. The technology requires an area of about 300 square feet for small-scale, single solvent extraction tank configurations for treatability studies, and up to 40,000 square feet for full-scale remediation. The pilot-scale SITE demonstration consisted of five l-ton capacity solvent extraction tanks, requiring an area of about 4,000 square feet.

Support equipment used for the SITE demonstration included a laboratory trailer and a health and safety trailer. The laboratory trailer was used for on-site sample analysis and storage of equipment, and served as an office for personnel. Two canopies were also used to protect equipment from inclement weather. Other equipment used during the demonstration included a front-end loader to excavate and homogenize soils, health and safety equipment, and sampling, analytical, and laboratory equipment.

Utilities required for the operation of the Terra-Kleen technology include potable water and electricity. Water is required for decontaminating equipment and personnel, mixing biological slurries, and laboratory use. During the demonstration, biological treatment required about 15 gallons of water per solvent extraction tank. In addition, equipment and personnel decontamination required about 50 gallons of water. Solid decontamination wastes may be stored in roll-offtype debris boxes, and the decontamination water can be stored in 55-gallon drums. Disposal options depend on local restrictions and on the presence or absence of contaminants.

Electricity was needed to operate the Terra-Kleen technology, the office and laboratory trailer, and the health

and safety trailer. The Terra-Kleen technology required 220-volt, three-phase, 120-ampere electrical service. Additional electrical power (100 amperes at 11 0/220-volt, single phase) was needed for the laboratory trailer, the health and safety trailer, and on-site laboratory and office equipment. A single 5-horsepower air compressor was used to power pneumatic pumps used for transferring solvent through the process.

## 2.7 Limitations of the Technology

The Terra-Kleen technology removes PCBs, PCDFs, oil and grease, and chlorinated pesticides from contaminated soils and prevents further migration of these contaminants. The technology concentrates these contaminants in the soil purification unit. The media from this unit must be recycled or disposed of when exhausted. Although the developer claims that the technology removes petroleum hydrocarbons, chlorinated hydrocarbons, PAHs, PCDDs, and solvent-soluble metals, the technology was not evaluated or testing failed to yield definitive results for these constituents.

Contaminated soils with greater than 15 percent clays or fines are difficult to treat because contaminants are strongly sorbed to the soil particles. The soil particle also have a tendency to form tight aggregates, which are difficult to break up thereby preventing efficient solvent penetration into the contaminated soil. Additional soil handling steps may be required to treat soils with a clay content greater than 15 percent.

Soils with a moisture content greater than 15 percent must be dewatered prior to treatment. Excess water in the soil dilutes the solvent, reducing contaminant solubilization and transport efficiency. However, the Terra-Kleen technology can be equipped with a dewatering unit (Section 1.3.1) to remove excess water accumulating in the solvent. The technology is designed to operate at ambient outdoor temperatures above freezing. Colder temperatures reduce solvent effectiveness. Although current modifications to the full-scale unit incorporate a closed-loop, heated system, the solvent extraction vessels are not jacketed; therefore, operation in extreme cold weather conditions may reduce treatment efficiency.

# 3.0 Treatment Effectiveness

This section presents the background, demonstration procedures, and the results and conclusions used to assess the effectiveness of the Terra-Kleen technology in removing PCBs, oil and grease, and PCDFs from contaminated soils. The Terra-Kleen technology assessment is based on the activities conducted during the SITE demonstration at NASNI and additional information from a SITE treatability study and full-scale remediation. However, because the results of the SITE demonstration were collected in accordance with a well-defined QAPP, conclusions are mainly drawn from the demonstration results.

The Terra-Kleen technology's capability to remove PCBs from soil was initially demonstrated during the SITE treatability study conducted at the developer's testing facility in Okmulgee, Oklahoma. The results of the treatability study are presented in Appendix A. To determine if the technology is capable of removing chlorinated pesticides from soil, EPA collected additional soil samples during the full-scale remediation at NCS Stockton. The results of the sampling from the full-scale remediation are presented in Appendix B.

## 3.1 Background

EPA conducted a SITE demonstration of the Terra-Kleen technology at Site 4 on NASNI, which is located in San Diego, California (Figures 3- 1 and 3-2). A description of the environmental setting at NASNI and Site 4 are presented in Sections 3.1.1. through 3.1.4.

### 3.1.1 NASNI

In October 1993, NASNI Site 4 was selected for the SITE demonstration of the Terra-Kleen technology. NASNI is located on about 2,520 acres of land at the north end of the peninsula that forms San Diego Bay and adjoins the city of Coronado. NASNI is accessible by land through Coronado by way of the Bay Bridge or through Imperial Beach by way of the Silver Strand Highway, State Route 75.

NASNI was officially commissioned in November 19 12, and provides services and material to support the operation of aviation activities and units. Although most of the industrial operations began in the 1920s, the generation of large quantities of hazardous wastes at NASNI did not begin until the 1940s, during World War II. In the 1940s, NASNI engaged in a wide variety of operations that involved the use, storage, and disposal of hazardous materials. Base operations such as aircraft maintenance and fuel storage operations generated a variety of hazardous wastes that, combined with past waste disposal practices, resulted in contamination of soil and groundwater at several locations on base.

NASNI is currently conducting environmental investigations under the Installation Restoration Program (IRP) to locate, investigate, and remediate hazardous waste sites. The IRP provides a procedural framework for developing, implementing, and monitoring response actions at NASNI in accordance with pertinent federal regulations and applicable state laws. The IRP has currently identified 12 contaminated areas on NASNI and recommended further investigation of soils, groundwater, surface water, and bay and ocean sediments (Southwest Division Naval Facilities [SWDIV] 1993).

The Navy's initiative to expedite remedial cleanup at these 12 contaminated sites is the Naval Environmental Leadership Program (NELP). The main objective of NELP is to demonstrate innovative technologies and expedite compliance andremediation of contaminated sites. Successful technologies may be applied to remediate contaminated sites at other Navy facilities. Within this framework, the Terra-Kleen technology was selected as an interim remedial action and was demonstrated at Site 4.

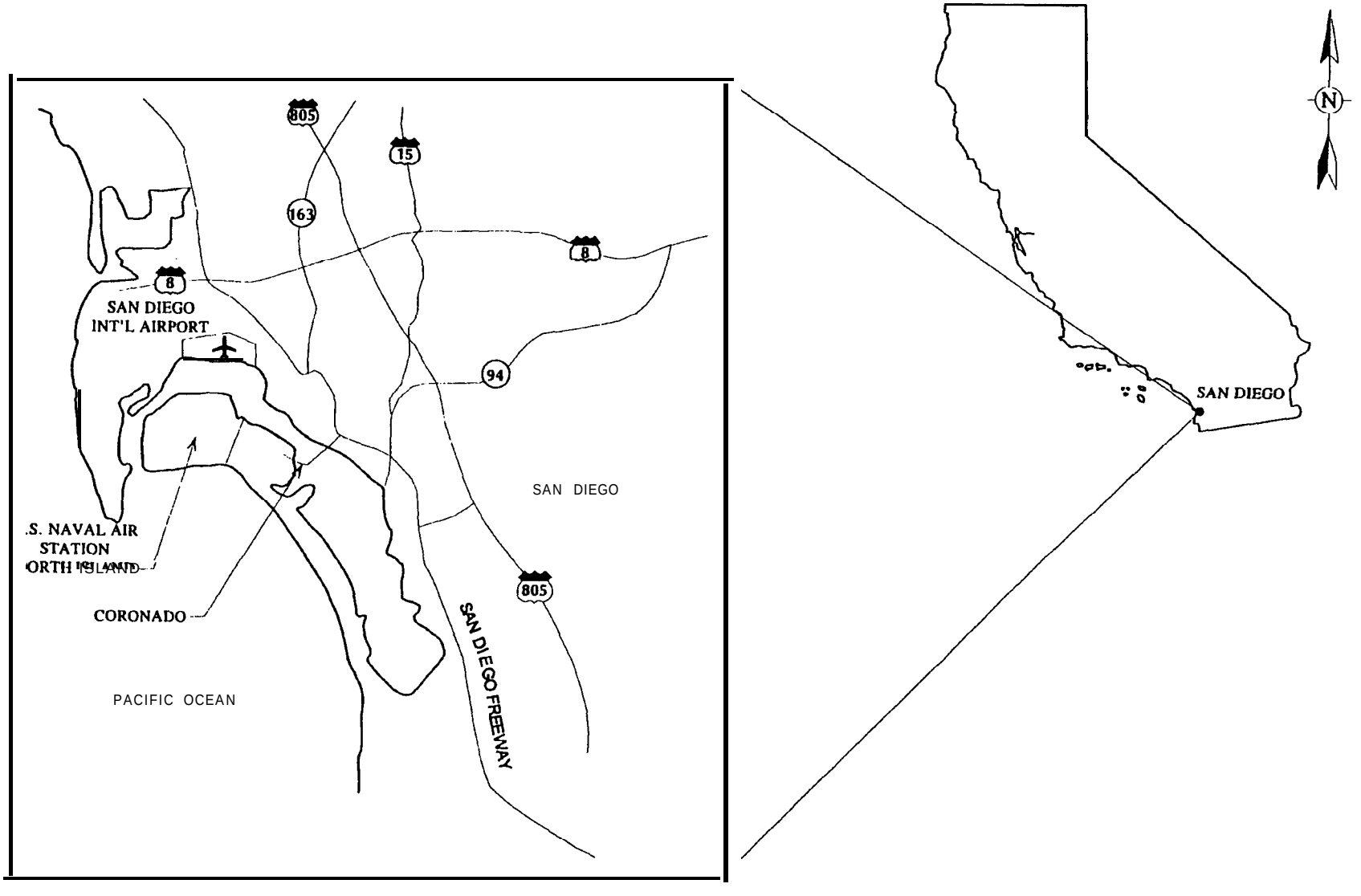


Figure **3-1.** NASNI location map.

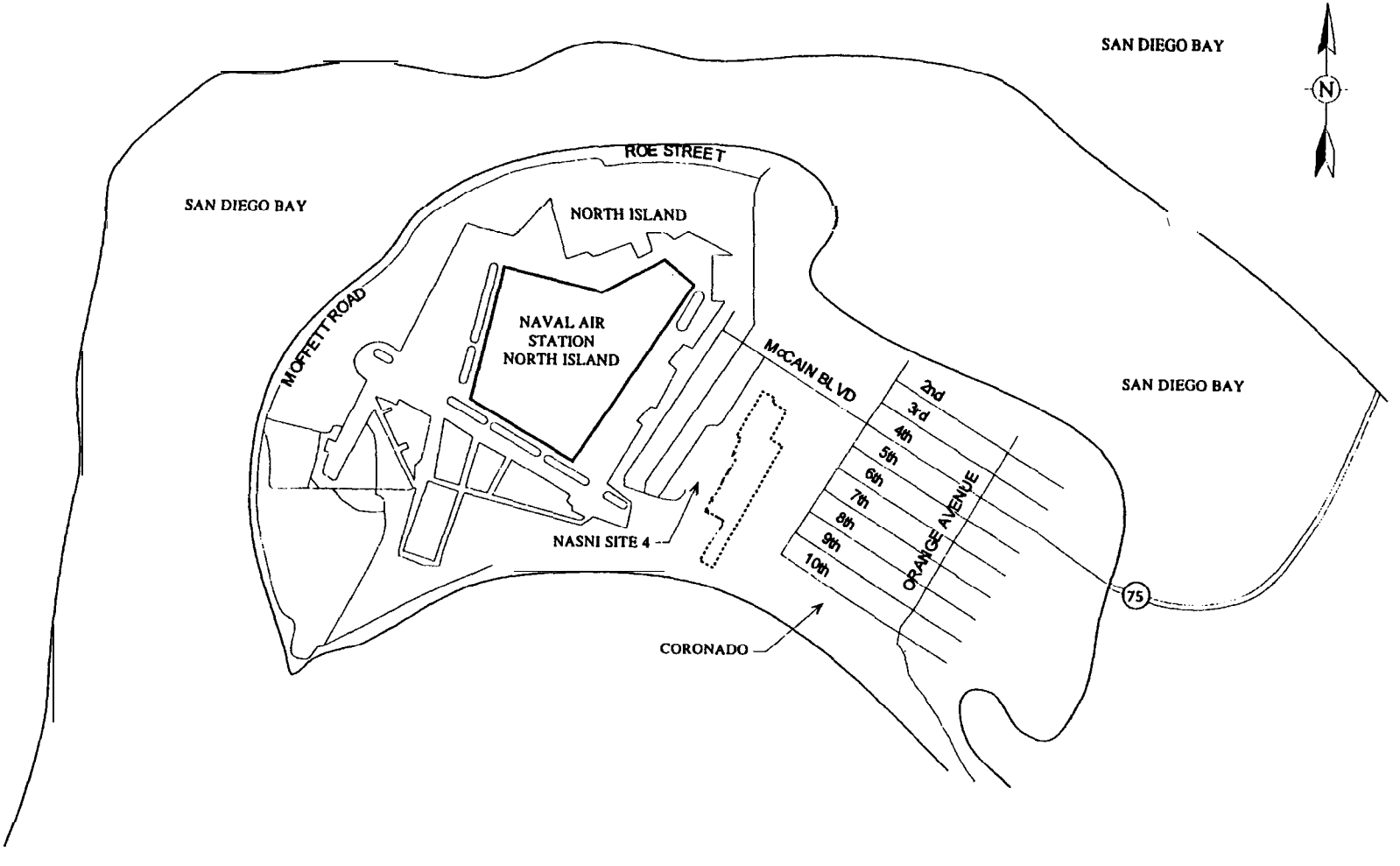


**Figure 3-2.** Site 4 location map.

### 3.1.2 Sife 4

Site 4 (Figure 3-3) is a former public works storage yard, about 3 acres in size, located towards the southeastern portion of NASNI. From 1967 through 1976, miscellaneous debris including electrical transformers, drums, small containers, scrap metal, and construction materials were stored at the site. According to past site investigations, about 52 of the electrical transformers stored in this area contained PCBs (SWDIV 1993). In 199 1, all surface material and debris were removed from the site.

### 3.1.3 Geology and Soils

Site 4 is underlain by about 25 feet of artificial fill that is primarily composed of dredged bay sediments. These bay sediments consist of silty sands and poorly graded sands that overlie the Bay Point Formation. The Bay Point Formation is a poorly consolidated deposit, composed ofnonmarine and marine medium- to large-grained fossiliferous sands containing shell fragments.

Soils on NASNI consist of marine loamy coarse sand that is derived from weathering of the Bay Point Formation. This soil is yellow to dark red-brown in color and contains 15 to 25 percent fines (SWDIV 1993). Three percent of the Site 4 soil has a grain size above 4.75 millimeters (mm) or less than 0.005 mm. About 72 percent of the soil has a grain size between 0.425 mm and 0.75 mm. Site 4 soil typically contains less than 1 percent soil moisture.

Groundwater is present at shallow depths beneath NASNI, varying from about 25 feet below ground surface (bgs) at the center of the island to about 4 feet bgs within the vicinity of Site 4 (SWDIV 1993).

### 3.1.4 Contamination at Site 4

Soil samples collected as part of a RCRA facility investigation showed that Site 4 soils contained elevated levels of PCBs (specifically, Aroclor 1260); inorganic constituents including arsenic, barium, chromium, and lead; VOCs including ethylbenzene, toluene, and xylene; and semivolatile organic compounds (SVOC) including PAHs. Dioxins and furans including heptachlorodibenzo-p-dioxin, octachlorodibenzofuran, and HxCDF were also detected in Site 4 soils (SWDIV 1993). The detected contaminants and their maximum and average concentrations are presented in Table 3-l. Figure 3-4 denotes the area on Site 4 that contained the highest PCB concentrations. Soil from this area was excavated and treated during the Terra-Kleen SITE demonstration.

## 3.2 Demonstration Objectives and Approach

The SITE demonstration was designed to address one primary and five secondary objectives selected for evaluation of the Terra-Kleen technology. These objectives were selected to provide users of the Terra-Kleen technology with the necessary technical information to assess the applicability of the technology to other contaminated sites. The following objectives were selected for the SITE demonstration of the Terra-Kleen technology:

Primary Objective:

- Determine whether Terra-Kleen technology reduces PCBs in soil to less than the TSCA incineration equivalent concentration for PCBs in soil of 2 mg/kg

Secondary Objectives:

- Determine Site 4 soil characteristics that may affect technology performance (moisture content, particle size distribution, oil and grease content) (S1)
- Determine if the Terra-Kleen technology removes VOCs, SVOCs, oil and grease, dioxins, and furans from soils (S2)
- Determine if, following treatment, the PCB concentration in the regenerated solvent is less than the TSCA incineration equivalent concentration for PCBs of 2 mg/kg to document that the solvent can be reused (S3)
- Document the operating conditions of the Terra-Kleen technology (S4)
- Estimate the capital and operating costs of treating soils and project additional capital and operating costs for full-scale operations (S5)

The demonstration objectives were achieved by collecting samples of untreated and treated soil, and from the regenerated solvent following treatment. To meet the demonstration objectives, data were collected and analyzed

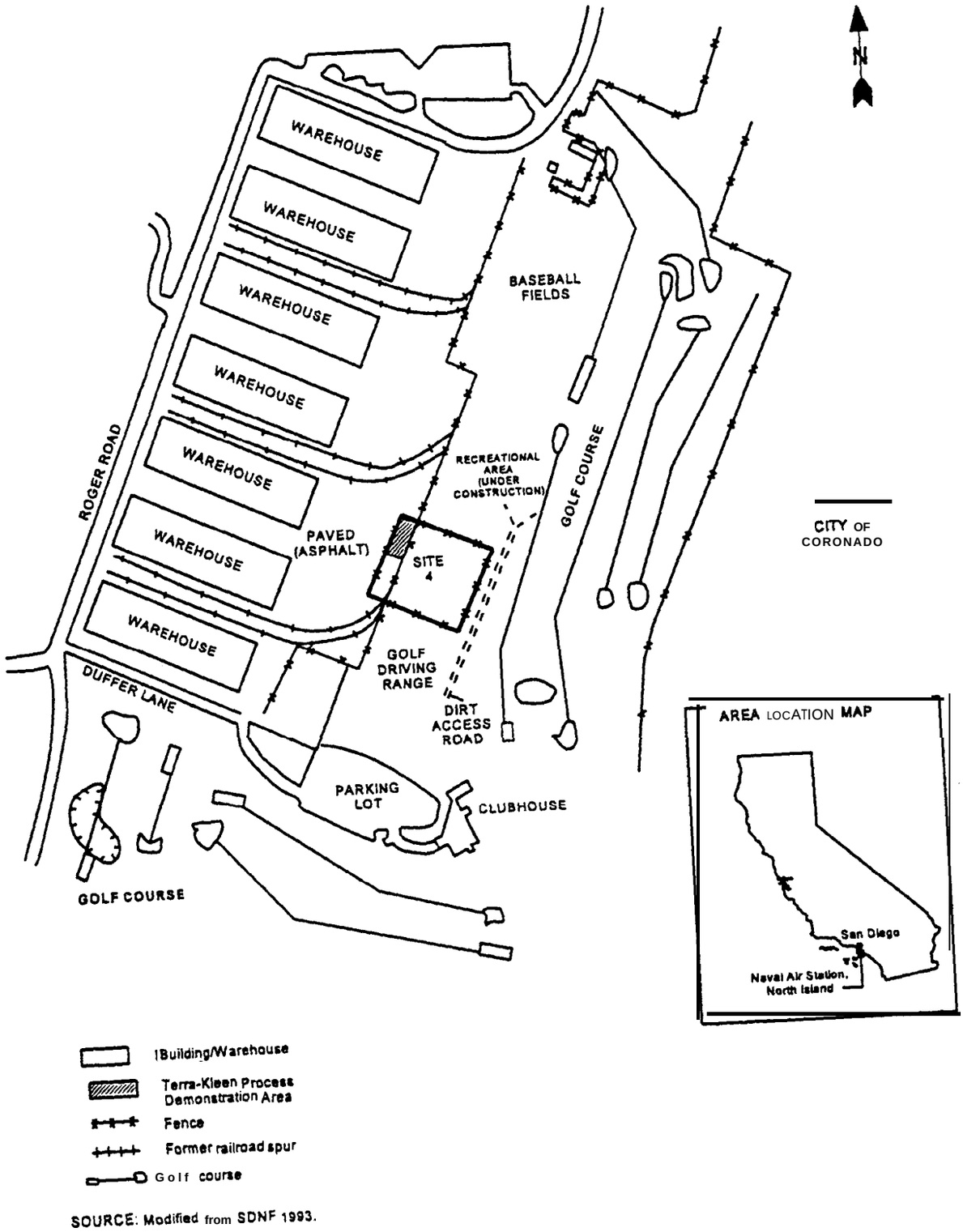


SOURCE: Modified from SDNF 1993.

**Figure** 3-3. NASNI Site 4 demonstration location.

**Table 3-I.** Maximum and Average Contaminant Concentrations

| Contaminant | Maximum Concentration | Average Concentration |
|---|---|---|
| Polychlorinated biphenyls | 35,000 mg/kg | 3,282 mglkg |
| Arsenic | 220 mg/kg | 30 mglkg |
| Barium | 670 mg/kg | 140 mg/kg |
| Chromium | 150 mg/kg | 40 mglkg |
| Lead | 2,800 mglkg | 533 mglkg |
| Ethylbenzene | 1,200 $\mu$g/kg | 604 $\mu$g/kg |
| Toluene | 200 $\mu$g/kg | 200 $\mu$g/kg |
| Xylene | 6,600 $\mu$g/kg | 3,323 $\mu$g/kg |
| 2-Methylnaphthalene | 98.0 mg/kg | 98 mglkg |
| Phenanthrene | 50.0 mg/kg | 16 mg/kg |
| 1,2,4-Trichlorobenzene | 1,300 mg/kg | 1,300 mg/kg |
| Heptachlorodibenzo-p-dioxin | 8.0 $\mu$g/kg | 8.0 $\mu$g/kg |
| Octachlorodibenzofuran | 230 $\mu$g/kg | 230 $\mu$g/kg |
| Heptachlorodibenzofuran | 230 $\mu$g/kg | 230 $\mu$g/kg |

Note: All concentrations are presented in dry weight.

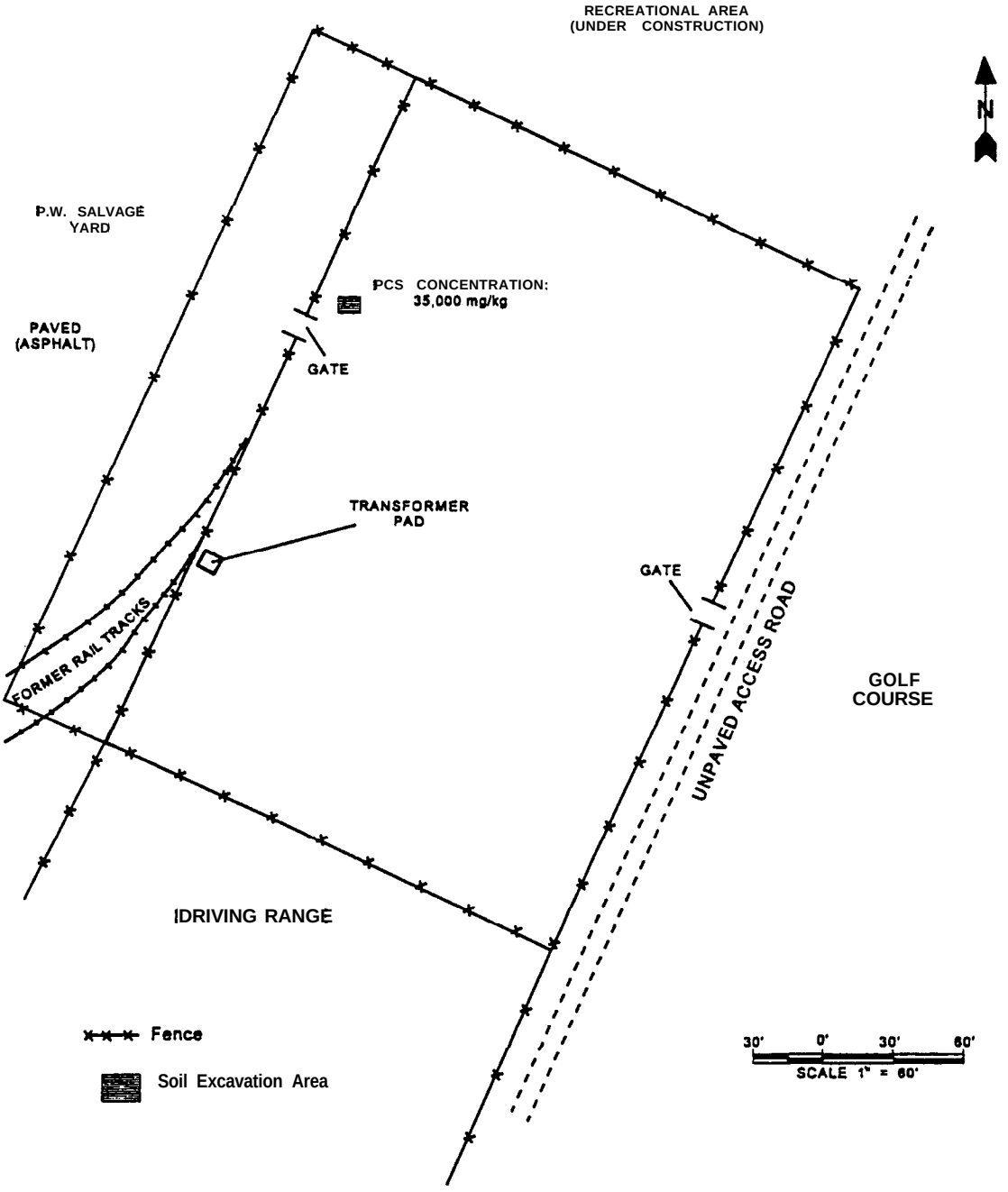


SOURCE: Modified from SDNF 1993.

Figure 3-4. NASNI Site 4 PCB contamination and excavation area.

using methods and procedures summarized in the following subsections.

## 3.3 Sampling and Analytical Procedures

This section describes the methods and procedures used to collect and analyze samples for the SITE demonstration of the Terra-Kleen technology. The field and analytical methods and procedures used to collect and analyze samples were conducted in accordance with the Terra-Kleen demonstration QAPP (PRC 1994a). Analytical methods included Method 8080A for PCBs (EPA 1992), Method 8240 for VOCs (EPA 1992), Method 3550/8270 for SVOCs (EPA 1992), Method 8280 for dioxins (EPA 1992), Method 907 1 for oil and grease (EPA 1992), Method 2540 G for total volatile solids (EPA 1983), Method D-0422 for particle size distribution, and Method D-22 16 for moisture content. The sampling and analytical activities for the SITE demonstration consisted of (1) demonstration preparation, (2) sampling and analysis program, and (3) field and laboratory quality assurance and quality control (QA/QC).

### *3.3.1 Demonstration Preparation*

Predemonstration activities consisted of preparing the demonstration QAPP, site health and safety plan (PRC 1994b), and the site. Site preparation activities at NASNI Site 4 included identifying the highest PCB concentrations and excavating, homogenizing, and transferring the contaminated soil into the five solvent extraction tanks.

The soils containing the highest PCB concentrations were identified by collecting samples and using an on-site GC to analyze for Aroclor 1260, the only PCB congener detected in Site 4 soils. Five tons of PCB-contaminated soil were excavated from several areas and homogenized. Once the soil was homogenized, each solvent extraction tank was loaded with 1 ton of PCB-contaminated soil.

### *3.3.2 Sampling and Analysis Program*

This section describes the sampling and analysis program and sample frequency for collecting demonstration samples. The objective of the demonstration design was to collect and analyze samples of known and acceptable quality to achieve the objectives stated in Section 3.2.

Sampling locations for the SITE demonstration were selected based on the configuration of the treatment technology and project objectives; analytical parameters were selected based on the soil contaminant (Aroclor 1260) and the project objectives. To meet the project objectives, PRC collected soil samples at five locations within the system and one sample of regenerated solvent from a location within the system during the SITE demonstration.

Soil sampling locations were identified as S-l and S-2, for untreated and treated soil, respectively. These samples were collected from the five solvent extraction tanks labeled S-1A through S-1E for untreated soil, and S-2A through S-2E for treated soil. The sample of regenerated solvent was collected after the last extraction cycle from the clean solvent storage tank. This sampling location was identified as S-3. The locations at which samples were collected during the 7-week demonstration are shown on Figure 3-5.

#### Soil Samples

Soil samples were collected from the five solvent extraction tanks. Untreated and treated soil samples were collected in accordance with the "Field Manual for Grid Sampling of PCB Spill Sites to Verify Cleanup" (EPA 1986). The manual was used to determine grid locations and sampling points within the solvent extraction tanks.

Following grid layout and sampling point identification, a stainless steel auger was used to collect soil cores at seven sampling locations. One core was collected from each sampling location to identify PCB concentrations throughout the 4-foot deep tank. Once a core was collected, about 1,000 grams of soil was placed in a stainless steel bowl. This procedure was repeated until all the soil samples from each of the seven sampling locations were collected. The samples were composited to ensure homogeneity. Soil from the composite sample was placed in the appropriate sample container and preserved appropriately for each sampling parameter.

Samples collected for VOC analyses were not cornposited. VOC samples were grab samples, collected directly from the soil auger. These samples were immediately placed into sample containers and sent to the laboratory for cornpositing. Sample containers and preservatives for these samples were specified in the QAPP (PRC 1994a).

#### Regenerated Solvent Sample

One sample ofregenerated solvent (S-3) was collected after the last extraction cycle from an in-line sampling port located on the clean solvent storage tank. The sample was analyzed

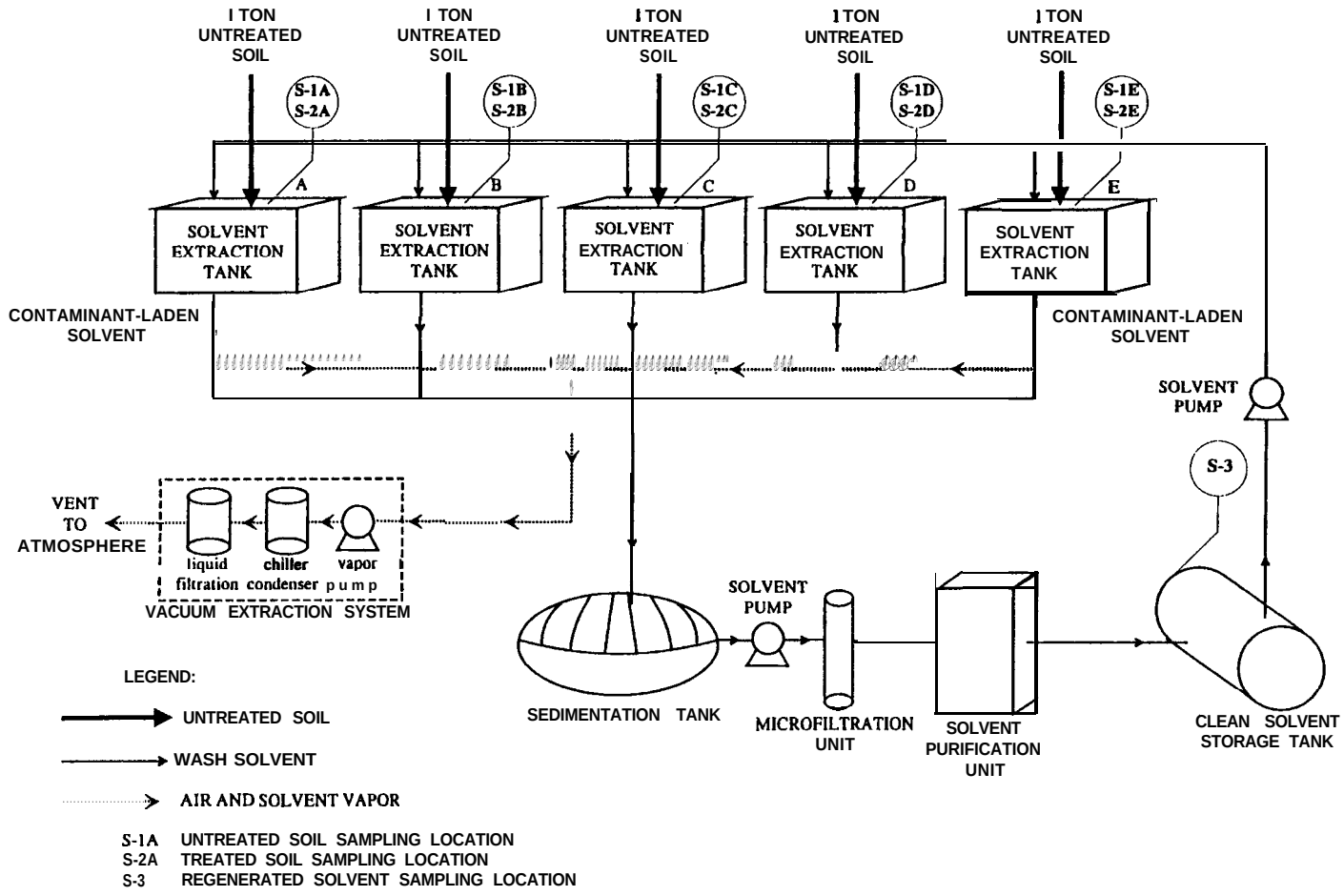


Figure 3-5. Terra-Kleen sampling locations.

for PCBs by the off-site laboratory. Sample containers and preservatives for this sample were specified in the QAPP (PRC 1994a).

### 3.3.3 Quality Assurance and Quaky Control Program

Quality control checks and procedures were an integral part of the Terra-Kleen demonstration to ensure that the QA objectives were met. These checks and procedures focused on collecting representative samples free of external contamination. Four kinds of QC checks and procedures were conducted during the demonstration: (1) checks controlling field activities, such as sample collection and shipment, and (2) checks controlling laboratory activities, such as extraction and analysis, (3) data quality, and (4) field and laboratory audits. A detailed discussion of the QA/QC program is provided in the TER (PRC 1996).

#### Field Quality Control Checks

To quantify the quality of field activities such as sample collection, shipment, and handling, three types of field QC checks (field blanks, trip blanks, and equipment blanks) were collected. In general, these QC checks assessed the representiveness of the samples, and ensured that the analytical data represent actual site conditions.

***Field Blanks***

Field blanks were collected to assess the potential for cross contamination of the samples from airborne dust or other sources during sample collection. For the VOC field blanks, three 40-milliliter (mL) VOA vials were filled with analyte-free ASTM Type II reagent water (reagent water). For the SVOC field blanks, the laboratory supplied two empty 250-mL amber containers that were filled in the field with reagent water. Field blanks were collected near the solvent extraction tanks during treatment. All field blank samples were labeled and submitted to the laboratory with the regular samples.

***Trip Blanks***

Trip blanks were prepared to document potential cross contamination attributable to shipping procedures. The analytical laboratory prepared trip blanks by filling two 40-mL VOA vials with reagent water. The trip blanks were transported to the site with the other sample containers, handled in the same manner as the other samples, and returned unopened to the laboratory with the sample shipment. The trip blanks also were labeled with their preparation dates. Trip blanks were only collected for aqueous VOC analyses. One trip blank (consisting of two 40-mL VOA vials) was included in every shipment cooler containing VOC samples.

***Equipment Blanks***

Equipment blanks were collected before soil samples were collected to determine whether contamination was introduced by the sampling equipment. Samples were collected by rinsing
the sampling equipment with distilled, deionized water and filling a sample bottle with the rinsate.

All blanks showed low level contamination with acetone and methylene chloride. Because these compounds were detected in both treated and untreated samples, and are considered common laboratory contaminants, their presence was not considered a result of field contamination. No other compounds were detected.

#### Laboratory Quality Control Checks

Laboratory QC checks are designed to determine precision and accuracy of the analyses, to demonstrate the absence of interferences and contamination from glassware and reagents, and to ensure the comparability of data, Laboratory-based QC checks consisted of method blanks, matrix spike/matrix spike duplicates (MS/MSD), sample/ sample duplicates (DUP), surrogate spikes, blank spike/ blank spike duplicates, and other checks specified in the analytical method. The laboratory also performed initial calibrations and continuing calibration checks according to the specified analytical methods. The results of the laboratory's internal QC checks for critical parameters are summarized on a method-specific basis in the TER (PRC 1996). Field procedures for collecting MS/MSD samples are briefly discussed below.

The demonstration field team collected MS, MSD, and DUP samples as specified in the QAPP. For those samples requiring MS/MSD or MS/DUP analyses, three times the amount of sample required for routine analysis was collected in the field. In the laboratory, one (MS/DUP) or two (for MS/MSD) aliquots of this sample were spiked to allow determination of percent recoveries and relative percent differences for the MS compounds.

### Data Quality

This section summarizes the data quality for soil samples and the regenerated solvent sample collected and analyzed during the Terra-Kleen demonstration. A detailed presentation of the data quality is provided in the TER (PRC 1996). This data quality assessment was conducted to incorporate the data validation results into the field QC results, evaluate the impact of ail QC measures on the overall data quality, and remove all unusable values from the investigation data set. The results of this assessment were used to produce the known, defensible information employed to define the investigation findings and draw conclusions. The QA objectives for this project were established in the QAPP (PRC 1994a).

A data validation review was conducted of the analytical data for soil and the regenerated solvent samples collected during the demonstration to ensure that all laboratory data generated and processed were scientifically valid, defensible, and comparable. Data validation was conducted using both field QC and laboratory QC analyses. The field samples included equipment blanks, field blanks, and trip blanks. Laboratory samples included method blanks, surrogate recoveries, initial and continuing calibration, MS/MSDs, and sample/sample duplicates. Analytical results from these samples were used to calculate the precision, accuracy, representativeness, comparability, and completeness of the data.

Summaries of analytical QC data are provided in the TER (PRC 1996) to facilitate validation and analysis of the data. In general, all data quality indicators met the QA objectives specified in the QAPP. This indicates that general data quality was acceptable and that the sampling data is usable as reported. All data quality indicators associated with sampling met all acceptance criteria specified in the QAPP.

### Field and Laboratory Audits

EPA conducted internal and external system audits to evaluate field and laboratory QC procedures.
The audits were conducted before data collection and analysis. Internal audits were performed by the SITE contractor and were independent of the sampling team. The results of EPA's external audits are presented in the TER (PRC 1996).

## 3.4 Demonstration Results and Conclusions

This section presents the results and conclusions from the SITE demonstration of the Terra-Kleen technology. The SITE demonstration provides the most extensive Terra-Kleen performance data to date and serves as the foundation for conclusions on the technology's effectiveness and applicability to other cleanups. The demonstration results have been supplemented by information from the Terra-Kleen SITE treatability study and the full-scale remediation.

This section presents the results and conclusions of the SITE demonstration by project objective. The specific primary or secondary objective is shown at the top of each subsection and is followed by a discussion of the objective-specific results.

The primary objective was considered critical for evaluating the Terra-Kleen technology. Secondary objectives provide additional information that is useful, but not critical, for evaluating the Terra-Kleen technology. One primary and five secondary objectives were selected for the SITE demonstration of the Terra-Kleen technology. These objectives are discussed in the following subsection.

### *3.4.1 Primary Objective*

*Determine whether the Terra-Kleen technology reduces PCBs in soil to less than the TSCA incineration equivalency concentration for PCBs in soil of 2 mg/kg*

This objective was measured by collecting five samples of untreated soil and five samples of treated soil from the solvent extraction tanks and analyzing the samples for PCBs. The analytical results and percent reductions for PCBs in the untreated and treated soil from each solvent extraction tank are listed in Table 3-2. These results indicate that the Terra-Kleen technology effectively removed PCBs from each batch of soil. PCBs were reduced to below 2 mg/kg (the TSCA incineration equivalency concentration limit) in all treated soil samples collected from the solvent extraction tanks. Percent reductions of PCBs averaged 98.8 ± 0.1 percent for all soil samples collected from the solvent extraction tanks.

Statistical analysis of the treated soil results also confirms that the average PCB concentration (1.71 mg/kg) in the treated soil was significantly less than 2.0 mg/kg at a 95 percent confidence limit ( =0.05). PCB concentrations in

the treated soil from each extraction tank were also compared to the average PCB concentration for all five extraction tanks plus or minus 2 standard deviations (1.7 1 ± 0.22 mg/kg). The results show that all PCB concentrations in treated soil were within two standard deviations of the average value, indicating that the observed variation for PCB concentrations among the solvent extraction tanks was within control standards for the SITE demonstration.

For each solvent extraction tank, five grab samples were collected from five subsampling locations throughout the tank's depth. The soil from each subsample was transferred to a stainless-steel container and mixed to create a single composite sample representing each tank; except for Tank A, which was designated for a field duplicate. Standard deviation, therefore, cannot be calculated.

### 3.4.2 Secondary Objective S1

*Determine Site 4 soil characteristics that may affect technology performance (moisture content, particle size distribution, oil and grease content)*

Moisture content analysis indicated that untreated soil contained an average moisture content of 0.83 percent, as measured in each of the five solvent extraction tanks. Terra-Kleen estimates that untreated soil should contain less than 15 percent moisture content prior to treatment. According to Terra-Kleen, a soil moisture content greater than 15 percent may dilute the extraction solvent, resulting in additional extraction cycles to reduce contaminants to site-specific cleanup levels. The extraction efficiency of diluted solvent was not evaluated during the SITE demonstration, since the moisture content of the soil was about 1 percent.

Table 3-3 provides the results of the particle size distribution analysis, which indicates that untreated soil consisted of an average of 80 percent sand, 15 percent gravel, and 5 percent silt and clay. The mean particle size was 0.2 mm which is considered fine gravel according to the unified soil classification system (Casagrande 1948). Terra-Kleen estimates that untreated soil should contain less than 15 percent clay and fines. According to Terra-Kleen, soils containing greater than 15 percent clay and fines may require additional solvent extraction cycles to remove contaminants to site-specific cleanup levels. Since the particle size did not vary between extraction vessels, the effect of particle size on extraction efficiency could not be determined for this demonstration.

Appendix A presents the results from the SITE treatability study at Okmulgee, Oklahoma, in which soils with 14.5 percent clay and fines (<0.075 mm) were treated with the Terra-Kleen technology. In general, the results of the treatability study indicate that when treating soils with high clay fractions, additional extraction cycles may be required to reduce contaminant concentrations to site-specific cleanup levels.

Oil and grease analyses indicates that untreated soil at NASNI Site 4 contained an average concentration of 760 mg/kg of oil and grease. According to Terra-Kleen, additional extraction cycles may be required to remove PCBs from soil containing elevated oil and grease concentrations. The relationship between oil and grease concentration and solvent extraction efficiency was not evaluated during the SITE demonstration.

### 3.4.3 Secondary Objective S2

*Determine if the Terra-Kleen technology removes VOCs, SVOCs, oil and grease, dioxins, andfurans from soils*

This objective was measured by analyzing untreated and treated soil from the five solvent extraction tanks for oil and grease, VOCs, SVOCs, dioxins, and furans. Removal efficiency for VOCs, SVOCs, and dioxins could not be calculated since the constituents were below the established method detection limits. The sampling results for oil and grease and furans are presented in Tables 3-4 and 3-5, respectively.

Oil and grease analyses indicated that the average concentration of oil and grease in the untreated soil averaged 760 mg/kg and in the treated soil samples averaged 258 mg/kg. The average removal efficiency for the five solvent extraction tanks was 65.9 ± 8.11 percent, with the greatest reductions observed in samples taken from extraction tanks C (66.3%) and D (79.3%). These results show that the Terra-Kleen technology can effectively and consistently reduce the concentration of oil and grease in soil.

Furan analysis indicates that only HxCDF and PeCDF were present in Site 4 soil at average concentrations in the untreated soil of 0.70 ± 0.06 µg/kg and 0.16 ± 0.03 µg/kg, and in the treated soil at 0.05 ± 0.003 µg/kg, and 0.04 ± 0.002 µg/kg, respectively. The average percent reduction for HxCDF was 92 ± 0.82 percent and for PeCDF was 76 ± 5.28 percent. These results indicate that the Terra-Kleen technology effectively removes HxCDF and PeCDF from soil.

Table 3-2. PCB Aroclor 1260 Analytical Results

| | Tank | Tank B | Tank C | Tank D | Tank E |
|---|---|---|---|---|---|
| Untreated Soil (mg/kg) | 130 | 140 | 134 | 147 | 170 |
| Treated Soil (mg/kg) | 1.70 | 1.54 | 1.69 | 1.77 | 1.85 |
| Percent Removal | 98.7 | 98.9 | 98.7 | 98.8 | 98.9 |

Note: All concentrations are presented in dry weight.

Table 3-3. Particle Size Distribution Analytical Results

| | Tank A | Tank B | Tank C | Tank D | Tank E |
|---|---|---|---|---|---|
| Gravel (>4.7 mm) | 10.3” | 12.2 | 12.0 | 6.9 | 21.8 |
| Sand (<4.7 mm, >2.0 mm) | 83.0 | 81.6 | 81.7 | 86.6 | 72.5 |
| Silt (<2.0 mm, >0.07 mm) | 4.0 | 3.3 | 4.0 | 3.3 | 2.5 |
| Clay (<0.07 mm) | 2.0 | 2.9 | 2.3 | 3.2 | 3.2 |
| Mean Size (mm) | 0.2 | 0.2 | 0.2 | 0.2 | 0.2 |

Note: [a]All values are mass distribution per tank (%)

**Table** 3-4. Oil and Grease Analytical Results

| | Tank A | Tank B | Tank C | Tank D | Tank E |
|---|---|---|---|---|---|
| Untreated Soil (mg/kg) | *747* | *720* | *707* | *767* | *860* |
| Treated Soil (mg/kg) | *310* | *284* | *238* | *159* | *301* |
| Percent Removal (%) | *58.5* | *60.6* | *66.3* | *79.3* | *65.0* |

Notes: Data were unavailable to calculate standard deviations for individual tanks.
All concentrations are presented in dry weight.

Table 3-5. Furan Analytical Results

| | Tank A | Tank B | Tank C | Tank D | Tank E |
|---|---|---|---|---|---|
| *Untreated Soil (μg/kg)* | | | | | |
| HxCDF Total | *0.65* | *0.62* | *0.62* | *0.84* | *0.70* |
| PeCDF Total | *co.41* | *0.14* | *co.34* | *0.16* | *0.22* |
| *Treated Soil (μg/kg)* | | | | | |
| HxCDF Total | *0.05* | *0.05* | *0.06* | *0.05* | *0.05* |
| PeCDF Total | *0.04* | *0.04* | *0.04* | *0.04* | *0.04* |
| *Percent Removal(%)* | | | | | |
| HxCDF Total | 92 | 91 | 90 | 94 | 92 |
| PeCDF Total | * | *71* | • | *75* | *81* |

Notes: *Percent removal cannot be determined.
Data were unavailable to calculate standard deviations for individual tanks.
All concentrations are presented in dry weight.

### 3.4.4 Secondary Objective S3

*Determine if, following treatment, the PCB concentration in the regenerated solvent is less than the TSCA incineration equivalent concentration for PCBs of 2 mg/kg to document that the solvent can be reused*

This objective was measured by collecting a sample of purified solvent from the clean solvent storage tank after the last extraction cycle and analyzing it for PCBs. Analytical results indicated that the regenerated solvent sample contained 0.08 mg/kg of PCBs. Since the PCB concentration was less than the TSCA incineration equivalent concentration for PCBs of 2 mg/kg, the solvent was deemed to be acceptable for reuse at other contaminated sites.

### 3.4.5 Secondary Objective S4

*Document the operating conditions of the Terra-Kleen technology*

The operating conditions during the demonstration were documented to identify general operating procedures during the SITE demonstration. The operating conditions and procedures used by Terra-Kleen for the SITE demonstration are presented below.

The first phase of the demonstration consisted of mobilization activities conducted by Terra-Kleen personnel. The solvent extraction tanks were connected in parallel to the solvent supply lines and the vacuum extraction system. Terra-Kleen personnel then continued assembling the remainder of the technology components, including the sedimentation tank, the microfiltration unit, and the clean solvent storage tank.

One ton of PCB-contaminated soil was placed in each of the five solvent extraction tanks. The tanks were covered and solvent was pumped into the solvent extraction tanks. For the SITE demonstration, the average time required to fill the solvent extraction tanks was 30 minutes, and Terra-Kleen allowed the solvent to remain in contact with the soil for about 30 to 45 minutes.

Solvent that was drained from the solvent extraction tanks flowed into the sedimentation tank. During the SITE demonstration, the time required to drain the solvent extraction tanks was approximately 2 hours. As described in Section 1.3.3, the sedimentation tank is designed to remove solids from the solvent exiting the solvent extraction tanks. However, since no suspended solids were present in the solvent following the extraction cycle, the sedimentation tank functioned mainly as a holding tank for the solvent. It also was used to control the flow of solvent through the microtiltration unit and the solvent purification unit.

During the SITE demonstration, Terra-Kleen conducted 11 extraction cycles in 7 days. Following the fifth extraction cycle, the soil in the solvent extraction tanks was sampled and analyzed onsite to determine the PCB concentration. Since the concentration of PCBs was above the target treatment goal of 2 mg/kg, Terra-Kleen continued additional extraction cycles. Following the eleventh extraction cycle, the soil in the solvent extraction tanks were again sampled and analyzed by the on-site GC. Analytical results indicated that the PCB concentration in all five solvent extraction tanks was below 2 mg/kg; therefore, the extraction cycles were discontinued and treated soil samples were collected and sent to an off-site laboratory for confirmatory analyses.

Following treatment, vacuum extraction and biological treatment of the residual solvent in the treated soil continued for an additional 2 weeks, resulting in an overall decrease of PCB concentration from an average of 144 mg/kg to less than 1.7 1 mg/kg. The pipes leading to the sedimentation tank were disconnected, and the outlet ports located at the bottom of the solvent extraction tanks were sealed. Residual solvent in the soil was removed using a centrifugal blower attached to the solvent extraction tanks. The vacuum used during the SITE demonstration was an electric unit that operated continuously to remove solvent vapor from the treated soil. The exhaust from the vacuum was vented through a condenser, which consisted of a steel drum surrounded by ice. The exhaust from the condenser was then directed to a second drum containing water, which acted as a wet scrubber to remove remaining solvent vapors before discharge to the atmosphere. The condensate was then pumped through the solvent purification unit and into the clean solvent storage tank.

Vacuum extraction reduced the residual solvent concentrations by an average of 39.3 percent during the first day of operation. Two additional days of vacuum extraction reduced solvent concentrations by an additional 9 percent, yielding an overall solvent concentration reduction of 48.3 percent during this process. Vacuum extraction was discontinued after the third day to comply with the terms of the demonstration air permit. According to the developer,

current modifications to the vacuum extraction system eliminate air emissions; therefore, the unit can operate until the residual solvent remaining in the treated soil is reduced to 1 to 2 percent.

Following vacuum extraction, the covers to the solvent extraction tanks were removed and biological cultures were added to each vessel to reduce the residual solvent in the treated soil to trace levels. Biological treatment consisted of mixing microorganisms with water and spraying the mixture onto the surface of the treated soil in the solvent extraction tanks. Terra-Kleen personnel monitored the solvent reductions daily by collecting treated soil samples and analyzing for residual solvent concentrations with the on-site GC. Solvent concentrations decreased during the first 4 days of treatment, with an overall removal efficiency of about 60 percent following both vapor extraction and biotreatment. Terra-Kleen conducted biological treatment activities for 2 weeks. On average, 38.9 percent of the solvent was removed during vapor extraction and 72.2 percent of the remaining solvent was removed during biotreatment.

### 3.4.6 Secondary Objective S5

*Estimate the capital and operating costs of treating soils andproject additional capital and operating costs for full-scale operations*

This objective was achieved by using capital cost information provided by the developer, measuring electricity consumption, and estimating labor requirements. A detailed estimate of the capital and operating costs of constructing a single treatment unit to remediate soil contaminated with PCBs is presented in Section 4.0. Costs were placed in 12 categories applicable to typical cleanup activities and include fixed and annual variable costs.

Since the required volume of soil treated with the Terra-Kleen technology is site-specific, costs were estimated for operating a treatment unit for three soil volumes for comparison. Given a time period of 7 months, the one-time capital costs for a treatment unit to remediate 500, 2,000, and 10,000 cubic yards of soil was estimated to be $300, $2 10, and $170 per ton, respectively. This unit cost includes the costs of remediation, site preparation, and residuals shipping and handling.

# Section 4
# Economic Analysis

The purpose of this economic analysis is to estimate costs for using the Terra-Kleen technology to remediate soil contaminated with PCBs. This economic analysis is based on the results of the SITE demonstration at NASNI and information obtained from the full-scale remediation at NCS Stockton. A theoretical site containing 2,000 cubic yards of PCB-contaminated soil is presented as the primary scenario for the economic analysis. A site containing 2,000 cubic yards of soil was selected as representative of a medium-sized remedial scenario. The economic analysis model was also used to develop cost estimates for treating 500 and 10,000 cubic yards of soil to provide a range of operating costs for likely scenarios.

## 4.1 Basis of Economic Analysis

The cost estimates were generated using an economic model developed by the SITE Program to enable comparison to similar technologies. The model presents Terra-Kleen operating costs in 12 categories that are applicable to typical cleanup activities at Superfimd and RCRA sites (Evans 1990). These 12 categories are:

- Site preparation
- Permitting and regulatory requirements
- Start-up
- Equipment
- Labor
- Consumables and supplies
- Utilities
- Effluent treatment and disposal
- Residual and waste shipping and handling
- Analytical services
- Maintenance and modifications
- Demobilization

## 4.2 Assumptions for the Economic Analysis

This subsection presents assumptions for the economic analysis. These assumptions were made primarily to account for variable site and waste parameters. For this analysis, it is assumed that 2,000 cubic yards of soil contaminated with PCBs requires treatment. This assumption is based on the following:

- The treatment system will consist of nine 20-cubit-yard treatment vessels with a total soil capacity of 150 cubic yards
- Soil will be washed five times as this is the average number of treatments necessary to achieve the desired results, depending on soil constituents
- The treatment system will be operated 8 hours per day, 5 days per week
- The vacuum extraction system will be operated 24 hours per day, 7 days per week
- The soil consists of sand and does not require dewatering before extraction

Using the above assumptions, a period of 7 months would be necessary to fully treat 2,000 cubic yards of soil from mobilization through demobilization.

Other assumptions used for this analysis include the following:

- The site is being remediated as part of a CERCLA response action and is located near an urban area in the Midwest
- The area of contamination has been delineated, and the soil to be treated has been characterized to have a density of 1.5 tons per cubic yard and contains 500 mg/kg of PCBs. A treatment goal has been established to reduce the PCB concentration to 5 mg/kg or below; this goal was selected as representative of a cleanup goal that has been used at several CERCLA response and RCRA corrective action sites.
- No pretreatment of the feed soil (for example, size separation) will be required
- Solvent extraction activities will be performed in ambient conditions at temperatures greater than 35°F to enable normal solvent extraction efficiency
- Residual solvent in treated soils will be sufficiently removed by vacuum extraction and subsequent biodegradation to allow the treated soil to be returned to the site
- Used solvents remaining after treatment will typically be incinerated off site at a RCRA facility
- Adequate access roads are available at the site
- A level area of adequate size is available on which to place the entire treatment system
- Utility lines such as electricity, water, and telephone are available onsite
- All equipment necessary for treatment can be rented locally
- All personnel operating the Terra-Kleen technology have health and safety training
- Two operators will be required to monitor system operations and operate heavy equipment
- Terra-Kleen personnel will operate all process equipment
- Paved staging areas for untreated and treated soils will not be needed, because the solvent extraction tanks can be transported to the excavation and backfilling area
- Treatment time, estimated to be 28 weeks, is assumed to be the same for all three volumes of soil

## 4.3 Factors Affecting Costs

The following discussion highlights many of the variables that can affect treatment costs. The effect of these variables on costs can be discussed only in general terms, because quantitative information to support other waste scenarios has not been developed. For example, although Terra-Kleen claims that it can treat soils, sludges, and sediments containing PCBs, chlorinated pesticides, chlorinated hydrocarbons, and other organic compounds, only PCB-contaminated soils will be considered for this economic analysis in accordance with information generated during the treatability study and the demonstration.

Site-specific factors will affect the labor, consumable, and supply costs of treating soil with the Terra-Kleen technology. Soil characteristics, contaminant concentrations, and treatment goals will affect the necessary draining time in the solvent extraction tanks and the number of extraction cycles required to achieve desired cleanup levels. In general, higher concentrations of contaminants in the soil and lower treatment goals will require more extraction cycles. Based on the results of the treatability study (Appendix A), soil moisture content, clay content, and natural humic content may affect treatment costs, because these soil characteristics affect whether the contaminated soil will require pretreatment before solvent extraction, additional extraction cycles to achieve complete soil penetration, or additional solvent recovery steps to remove accumulated water. According to Terra-Kleen, since the technology is conducted as a batch process, the cost of performing additional treatment cycles is negligible. Other site-specific factors to be considered when estimating the cost of the Terra-Kleen technology include physical site conditions, geographical site location, site accessibility, and availability of utilities.

The Terra-Kleen technology is designed to operate under ambient weather conditions. Cold temperatures reduce solvent fluid dynamics; extremely cold weather conditions

can impede extraction efficiency. If extraction activities must be conducted in cold weather, insulated jackets or other temperature control measures must be used, increasing site preparation costs. As an alternative, treatment can be ceased during cold-weather months, which will increase startup and demobilization costs (Sections 4.4.3 and 4.4.12).

Another factor that may affect costs is whether contaminated solvent must be disposed of or can be reused. Depending on the concentrations ofhazardous substances in the solvent, it may be transported to another remediation site, if one is available, for reuse. In these cases, little or no solvent will require disposal, and fewer disposal costs will be incurred.

The use of additional solvent extraction tanks can reduce the amount of time required to complete remedial activities. For example, multiple solvent extraction tanks could be used in an area with long periods of cold weather that would normally preclude efficient use of the Terra-Kleen technology. This will reduce the time required for treatment, but will increase equipment-related costs such as mobilization (a component of site preparation) and equipment (Sections 4.4.1 and 4.4.4).

Permitting and regulatory compliance costs (Section 4.4.2) will vary, depending on the types of wastes being treated and under what authorities the treatment is conducted. In general, actions conducted as part of a CERCLA response action will not require permits; however, substantive requirements of environmental laws must be met. Some activities, such as those involving RCRA hazardous wastes or PCB-contaminated wastes, will require RCRA Subtitle C or TSCA permits. Regulatory costs also may increase if personnel who will operate the system have not received required training (for example, health and safety training required under OSHA regulations at 29 CFR 19 10.120[e]).

## 4.4 Results of the Economic Analysis

For each of the 12 cost categories, Table 4-l presents the costs associated with treating 500, 2,000, and 10,000 cubic yards of soil. Reported amounts are rounded to the nearest 5 dollars and are presented in 1995 dollars. The following subsections discuss the costs associated with treating 2,000 cubic yards of soil.

### *4.4.1 Site Preparation Costs*

Site preparation costs include those for the treatment area, mobilization, and electricity connection. costs of preparing the treatment area include those for building a spill containment area. About 3,600 square feet will be needed to accommodate the Terra-Kleen technology and support equipment considered in this analysis. It is assumed that two layers of 1 0-mil polyethylene plastic will be used as a liner for the treatment area with sandbags placed under the liner to form a berm around the perimeter. Terra-Kleen estimates that the material used to prepare the treatment area will cost about $500.

Mobilization involves delivering all treatment equipment to the site, preparing the linings for the treatment tanks, and connecting the electrical lines. (The costs of the proprietary solvent are presented in Section 4.4.6, Consumables and Supplies.) The estimated cost for equipment delivery is estimated at $4,850. Material associated with lining the nine extraction tanks is estimated to cost $3,250. Once the complete technology has been delivered to the site, it is assumed that electricity can be connected for a cost of about $4,000.

Site preparation is estimated to require about five 8-hour days to complete. It is assumed that five Terra-Kleen personnel will be required to prepare the treatment area and oversee equipment placement. Based on the assumptions in this analysis, labor costs for site preparation will be about $6,560 (Section 4.4.5, Labor).

Total costs for site preparation are estimated to be about $19,160. This cost is identical for all three scenarios because, based on the assumptions stated in subsection 4.1, the amount of required equipment and preparation time are identical.

### *4.4.2 Permitting and Regulatory Requirements*

Although some time may be spent working with regulatory agencies, this analysis assumes that the cost of this line item is negligible because (1) the Terra-Kleen technology will be operated at a Superfund site (permits are not required for these operations), and (2) all Terra-Kleen personnel have received required health and safety training.

Table 4-l. Costs Associated with the Terra-Kleen Technology

| Cost Categories[a] | Volume of Soil Treated (cubic yards)[b] | | |
|---|---|---|---|
| | 500 | 2000 | 10.000 |
| Site Preparation" | 19,160 | 19,160 | 19,160 |
| Regulatory Compliance Requirements[b] | 0 | 0 | 0 |
| Startup[d] | 25,120 | 61,120 | 253,120 |
| Equipment[d] | 56,375 | 101,190 | 232,320 |
| Labor[d] | 45,920 | 183,680 | 918,400 |
| Consumables and Supplies[d] | 32,250 | 129,000 | 645,000 |
| Utilities[d] | 380 | 1,520 | 7,630 |
| Effluent Treatment and Disposal[d] | 20,000 | 80,000 | 400,000 |
| Residual and Waste Shipping and Handling[d] | 4,700 | 15,000 | 43,800 |
| Analytical Services[d] | 9,000 | 36,000 | 180,000 |
| Maintenance and Modifications[d] | 0 | 0 | 0 |
| Demobilization" | 11,050 | 11,050 | 11,050 |
| Total Fixed Cost" | $30,210 | $30,210 | $30,210 |
| Total Variable Costs[d] | $193,745 | $607,510 | $2,680,270 |
| Total Costs | $223,955 | $637,720 | $2,710,480 |
| Costs per Ton of Soil Treated | $300 | $210 | $170 |

Notes:
[a]Costs are in 1995 dollars.
[b]One cubic yard equals 1.5 tons.
'Fixed costs
"Variable costs

### 4.4.3 Startup

Startup costs include assembling treatment equipment and initial startup activities. This analysis assumes that five Terra-Kleenpersonnel will assemble piping and connections to tanks, test valves, and excavate and stage the first batch of soil for treatment. Startup is estimated to require 10 8-hour days to complete, and will begin immediately following mobilization activities. Startup costs also include a $16-per-ton royalty fee charged by Terra-Kleen. Total costs for startup are estimated to be $6 1,120 for a 2,000-cubic yard site.

### 4.4.4 Equipment

Equipment costs include those for capital Terra-Kleen equipment and rental equipment. All equipment is assumed to be needed for the duration of the remediation. For this analysis, the duration will be 7 months, including site preparation and startup.

Terra-Kleen equipment includes proprietary equipment that cannot be rented, such as pumps, piping, a compressor, flow lines, and vacuum extraction equipment. Terra-Kleen provides this equipment to its clients as part of the price of performing site remediation for a one-time cost of $27,600, regardless of the size of the cleanup site. In addition, Terra-Kleen charges a one-time fee of $15,000 to provide a GC to perform on-site analytical testing. The total cost of capital equipment is about $42,600.

Rented equipment includes that for the treatment process itself and auxiliary equipment. For this analysis, rented treatment equipment, with monthly rental costs, includes the following:

- Nine 20-cubic-yard treatment vessels ($250 each per month)
- Two 20-cubic-yard biological treatment vessels ($250 each per month)
- One 6,000-gallon steel solvent tank ($450 per month)
- One 10,000-gallon sedimentation tank ($550 per month)

Total rental costs for treatment equipment are about $3,750 per month.

Rented auxiliary equipment, with monthly rental costs, includes the following:

- One 8-foot by 20-foot mobile office trailer ($320 per month) for equipment storage
- One front-end and backhoe loader ($2,000 per month) to excavate and load contaminated soil into the solvent extraction tanks, and then spread treated soil
- One roll-off truck ($2,000 per month) to transport the solvent extraction tanks from the excavation area to the treatment area and then to the backfill area
- One power steam cleaner ($100 per month) to de-contaminate equipment when necessary
- One portable toilet ($200 per month).

Total costs for rented auxiliary equipment will be about $4,620 per month. The total estimated cost for all equipment associated with this analysis is $10 1,190 for a 2,000 cubic-yard site.

### 4.4.5 Labor

Terra-Kleen provides the personnel required to operate and maintain the Terra-Kleen technology. The staff for this analysis, with hourly wage rates that include overhead and fringe benefits, consist of the following: two operators ($32 per hour), two assistants ($25 per hour), and one project manager ($50 per hour). All staff members are assumed to work 8-hour days, 5 days per week for 28 weeks to complete the project. The project manager will oversee all operations, collect samples, and perform miscellaneous administrative functions.

The total cost of labor for the 7 months required to treat 2,000 cubic yards of soil is about $183,680. Labor requirements, time, and costs associated with site preparation and setup are presented under separate sections.

### 4.4.6 Consumables and Supplies

Consumables and supplies include solvents and solvent purification media, disposable PPE, fiber drums for the disposal of PPE, the purification unit, and diesel fuel for heavy equipment. Due to the proprietary nature of the

materials used in the treatment process, the costs of these materials are provided as the total sum needed to treat 2,000 cubic yards of soil.

Required materials include (1) extraction solvent, and (2) proprietary solvent purification media for use in solvent purification units. Required solvent purification media includes initial volumes to begin treatment and makeup volumes during treatment. Total solvent cost for this analysis is about $42,400. The actual makeup volume for the solvent purification media depends on the concentration of organic substances in the contaminated soil. For this analysis, the total cost of solvent purification materials is about $80,500. The total cost of proprietary materials is about $122,900.

Disposable PPE includes Tyvek coveralls, gloves, boots, and air purifying respirator cartridges. At a minimum, nondisposable PPE includes steel-toed boots, respirators, hard hats, and safety glasses. It is assumed that both operators wear PPE during soil excavation activities and that they change PPE about once per day. It is also assumed that the assistants do not need to wear PPE unless they perform work close to excavated soil. Disposable PPE costs are estimated to be about $30 per day. Total costs for disposable PPE are estimated at $4,200.

Drums are needed to containerize disposable PPE. It is assumed that used PPE will be disposed of in 24-gallon fiber drums. This analysis assumes that disposable PPE will fill about 24 fiber drums, yielding a total drum cost of about $290.

Diesel fuel will be used to power all heavy equipment used at the site. This analysis assumes that 50 gallons per week will be required and that heavy equipment will be operated for the duration of the project. Total diesel fuel use is estimated at about 1,400 gallons. Diesel fuel is assumed to cost about $1.15 per gallon, for a total cost of about $1,610.

Total costs of consumables and supplies are estimated at $129,000.

### 4.4.7 Utilities

Utilities used by the Terra-Kleen technology and auxiliary equipment include electricity and water. Electricity powers the treatment system pumps and mobile office trailer. Water is required for mixing biological slurries for solvent biodegradation.

It is assumed that two 3-horsepower vacuum extraction pumps will operate 24 hours per day during solvent extraction activities. For this analysis, one 5-horsepower fluid pumping system is estimated to operate 4 hours per day. The mobile office trailer is assumed to be in use 10 hours per day. For this analysis; total electrical use is estimated at about 20,600 kilowatt hours (kWh). Electricity is estimated to cost about $0.07 per kWh, inclusive of use and demand charges. Total electrical costs are estimated at $1,440. Based on water use during the technology demonstration, water use is estimated at 1,500 gallons per solvent extraction tank. Total water use is estimated at 54,000 gallons. This analysis assumes that water costs about $1.50 per 1,000 gallons; therefore, total water costs will be about $80.

Total utility costs are estimated at $1,520.

### 4.4.8 Effluent Treatment and Disposal

The solvent and solvent vapors are the only effluents produced by the Terra-Kleen technology that require treatment. The current Terra-Kleen technology is equipped with a solvent purification unit for solvent regeneration and a vapor control unit. Spent purification media generated by these units will require proper off-site disposal due to the presence of concentrated PCBs. Due to the proprietary nature of this material, the disposal cost is provided as a total sum of $80,000.

### 4.4.9 Residuals and Waste Shipping and Handling

Residuals produced by the Terra-Kleen technology that require off-site disposal are spent solvent and drummed PPE. For this analysis, it is assumed that treated soils and sediment accumulated in the sedimentation tank can be backfilled at the site. Iftreated soils require off-site disposal, the costs are an additional $130 per cubic yard, plus transportation costs.

Used solvent is continuously recovered by the Terra-Kleen technology. Spent solvents may either be disposed of or reused at another site. This analysis assumes that about 1,000 gallons of spent solvent remain at the completion of site remediation activities and that this solvent will be disposed. This analysis further assumes that the wastes are shipped

within 100 miles to the nearest RCRA-permitted treatment facility. Transportation costs are assumed to be about $600. Disposal costs are estimated at about $350 per drum. Total costs of proprietary solvent disposal are about $7,200.

Drummed PPE is assumed to be disposed of off site as nonhazardous waste. This analysis assumes that the drums are accumulated on site until treatment has been completed, and are then shipped off site in one load. For this analysis, disposal of about 24 drums is required. Transportation costs are about $600, and disposal costs are about $300 per drum. Total costs of drum disposal are estimated at $7,800.

Total shipping and handling costs for residuals and waste are estimated at $15,000.

### 4.4.10 Analytical Services

Analytical costs for this analysis include off-site laboratory analyses and on-site analyses performed by Terra-Kleen. The costs of off-site laboratory analyses include sample analysis, data reduction and tabulation, QA/QC, and reporting. This economic analysis assumes that one composite sample of treated soil is collected for PCB analysis from each solvent extraction tank upon completing treatment, costing about $200 for each sample. Data reduction, tabulation, QA/QC, and reporting are estimated to cost an additional $100 per sample. Total analytical costs are estimated at about $36,000.

Terra-Kleen provides a GC to conduct on-site analysis. The cost of this equipment is presented in Section 4.4.4, Equipment. Terra-Kleen includes labor and other analytical costs in the cost of providing the remediation service.

### 4.4.11 Maintenance and Modifications

Most of the equipment used for the Terra-Kleen technology is rented. The costs of maintenance and modifications for equipment are covered in the cost of the rentals. Costs for maintaining Terra-Kleen equipment are provided in the cost of that equipment (Section 4.4.4, Equipment).

### 4.4.12 Demobilization

Demobilization costs include all labor associated with shutdown, disassembly, and decontamination of equipment; site restoration; return of rented equipment; and disposal of the treatment area liner. It is assumed that demobilization activities will require five Terra-Kleen personnel working for about five 8-hour days to complete. For a breakdown of labor levels and wage rates, see Section 4.4.5, Labor.

Total labor costs for demobilization are $5,000.

This analysis assumes that the return costs of rented equipment are the same as the drop-off costs. Therefore, return costs for demobilization equipment are $4,850. The costs associated with returning Terra-Kleen equipment are covered in the one-time fee for that equipment, so no additional demobilization cost is included for this equipment (Section 4.4.4, Equipment).

Disposal of the treatment area liner is required. This analysis assumes that the liner is placed in four fiber drums, and transported and disposed of with the drums of used PPE. The total cost of about $1,200 includes disposal of the four drums, but does not include the transportation fee.Total demobilization costs are estimated at $11,050.

# Section 5
# Technology Status

Development of the Terra-Kleen technology has continued into full-scale remedial operations. In July 1994, a full-scale unit began treating soils contaminated with chlorinated pesticides at NCS Stockton, in Stockton California. NCS Stockton selected Terra-Kleen for full-scale treatment of 550 tons of pesticide-contaminated soil. Appendix B presents the procedures used and the results of this full-scale remediation.

Terra-Kleen has modified the vacuum extraction system by installing a refrigeration-condenser unit and adding a noncontact heat exchanger. The new larger condenser unit has increased the volume of solvent recovery that is recycled back to the clean solvent storage tank, resulting in reduced air emissions. The new heat exchanger allows higher temperature air to enter the solvent extraction tanks, which increases extraction efficiency.

Terra-Kleen has increased the treatment capacity of the technology by adding additional solvent extraction tanks, and enlarging the solvent purification unit to handle an increased solvent flow. Customized roll-off extraction tanks have been designed for easy transport and soil loading and unloading. Additionally, Terra-Kleen has also trailer-mounted all support equipment to make it easier to transport the technology.

Future applications of the Terra-Kleen technology are scheduled for sites in Alaska using a unique in situ treatment approach. Other full-scale remediations are planned for Naval facilities throughout the country. The SITE Program may conduct additional evaluations of the Terra-Kleen technology for treating PCBs in mixed low-level radioactive wastes.

# Section 6
# References


Casagrande A. 1948. "Classification and Identification of Soils" *Trans. American Society of Civil Engineers* Volume, 113, Pages 901-991.

Evans, G. 1990. "Estimating Innovative Technology Costs for the SITE Program." *Journal of Air and Waste Management Association.* Volume 40, number 7. Pages 1047-51.

PRC Environmental Management, Inc. (PRC). 1994a. Final Demonstration Quality Assurance Project Plan for the Terra-Kleen Solvent Extraction Process. May.

PRC. 1994b. Final Health and Safety Plan for the Terra-Kleen System Technology SITE Demonstration at Naval Air Station North Island, California. April

PRC. 1996. Final Technology Evaluation Report for the Terra-Kleen Solvent Extraction Technology. July.

Southwest Division Naval Facilities. 1993. Resource Conservation and Recovery Act (RCRA) Facility Investigation (RFI) Report. Prepared by Jacobs Engineering Group, Inc. December.

U.S. Environmental Protection Agency (EPA). 1983. "Methods for the Chemical Analysis of Water and Wastes (MCAWW)." EPA-600/4-79-020. Environmental Monitoring and Support Laboratory, Cincinnati, Ohio. Revised March 1983.

EPA. 1986. "Field Manual for Grid Sampling of PCB Spill Sites to Verify Cleanup." EPA-56015-86-017. Office of Toxic Substances. May.

EPA. 1990. A Guide on Remedial Actions at Superfund Sites with PCB Contamination. Publication No. 9335.4-01FS. Office of Solid Waste and Emergency Response. August.

EPA. 1992. "Test Methods for Evaluating Solid Waste." Physical/Chemical Methods, Laboratory Manual, Volumes 1A through 1C, and Field Manual, Volume 2. SW-846, Third Edition (Revision 0). Office of Solid Waste. November 1986 and subsequent revisions.

# Appendix A
# Terra-Kleen Treatability Study

Terra-Kleen Response Group, Inc. (Terra-Kleen), has developed a solvent extraction technology (Terra-Kleen) to treat soils contaminated with PCBs and other organic constituents. Terra-Kleen demonstrated its technology during a treatability study conducted by the Superfund Innovative Technology Evaluation (SITE) Program in October 1993 at Terra-Kleen's facility in Okmulgee, Oklahoma.

The main objective of the treatability study was to determine the technology's effectiveness in removing PCBs from soil. Terra-Kleen used the Toxic Substances Control Act (TSCA) incineration equivalency performance guidance level for PCBs of 2 milligrams per kilogram (mg/kg) as a target treatment level. The study was conducted in accordance with an EPA-approved Level III quality assurance project plan (QAPP).

In October 1993, the SITE Program obtained 1 -ton batches of PCB-contaminated soil from each of three sites and shipped the soils to Terra-Kleen in Oklahoma. These soils were obtained from Sites 4 and 6 at Naval Air Station North Island (NASNI) in Coronado, California, and from a site in Anchorage, Alaska. Soils from these three sites were excavated from areas with the highest reported PCB concentrations. Analytical results of all soils revealed that Aroclor 1260 was the only PCB mixture present. The Anchorage soil was air-dried to reduce moisture content prior to treatment; the NASNI soils did not require any pretreatment.

For the treatability study, Terra-Kleen used a small, pilot-scale treatment system that consisted of a single l-ton solvent extraction tank, a microfiltration unit, a sedimentation tank, a solvent purification station, a solvent storage tank, a clean solvent storage tank, diaphragm pumps, an air compressor, and a vacuum extraction unit. Each batch of soil was treated separately with multiple extraction cycles. Treatment times lasted from 3 to 11 days depending on original PCB concentrations and soil characteristics.

Terra-Kleen began the treatment process by placing a batch of soil into the solvent extraction tank. About 75 gallons of clean solvent was pumped from the clean solvent storage tank into the solvent extraction tank, completely saturating the soil. After a l-hour extraction period, the solvent was drained into the sedimentation tank, pumped through the microfiltration unit to remove remaining suspended fines, and pumped to the solvent purification unit, where PCBs and other organic contaminants were removed so the solvent could be used in the next extraction cycle. Extraction cycles were continued until PCB concentrations were below 4 parts per million (ppm) in the solvent drained from the solvent extraction tank (solvent effluent), as measured by enzyme immunoassay (EIA). Residual solvent vapors were recovered in a 55-gallon water filter drum.

Composite samples were collected from untreated and treated soil in the solvent extraction tank according to the U.S. Environmental Protection Agency (EPA) PCB sampling protocols and analyzed using gas chromatography. In addition, EIA test kits were used in the field to monitor PCB concentrations in soil and solvent effluent throughout the treatment process. Laboratory gas chromatography results were used to document the technology's overall PCB removal efficiency.

As shown in Table A-l, results from treated soil showed that PCB removal efficiency ranged from 95.3 to 99.1 percent. PCB concentrations in treated soils from both NASNI sites were reduced to below the target concentration of 2 mg/kg. More extraction cycles were required to reduce the concentration of PCB in the soil to 6.0 mg/kg for soils with higher initial PCB concentrations. As

demonstrated in treatability studies, the Alaskan soil also contained a higher percentage of fines, clay, and natural organic material than the NASNI soils, a fact which may have contributed to the higher number of extraction cycles needed to reduce the concentration of PCBs in soil to 6.0 mg/kg. Terra-Kleen's experience with different soils confirms that a soil's physical characteristics can affect the number of extraction cycles required to achieve site-specific cleanup levels.

The reduction of PCB concentrations in NASNI soils below the target level confirmed the feasibility of using the Terra-Kleen technology in a full SITE demonstration at NASNI. The findings from the treatability study were incorporated into the test plan and QAPP for the demonstration, which was conducted in June 1994.

Table **A-I.** Treatability Study Analytical Results

| | NASNI Site 4 | NASNI Site 6 | Alaska Site |
|---|---|---|---|
| PCBs in untreated soil (mg/kg) | *17.0* | *28.0* | *6.0* |
| PCBs in treated soil (mg/kg) | *0.78* | *1.4* | *6.0* |
| Percent Removal (%) | 95.3 | 95.0 | 99.1 |
| Percent clay and fines, *CO.075* mm (%) | *3.5* | 7.9 | *14.5* |
| Percent moisture content (%) | *0.04* | *1.3* | *15.0* |
| Number of extraction cycles | *12.0* | *24.0* | *57.0* |

Notes: All concentrations are presented in dry weight.
The soil from each subsample was transferred to a stainless-steel container and mixed to create a single composite sample; therefore, standard deviation could not be calculated.

# Appendix B
# Terra-Kleen Technology Full-Scale Implementation

In June 1994, Terra-Kleen Response Group, Inc. (Terra-Kleen), was tasked to conduct a full-scale remediation of three pesticide-contaminated sites at Naval Communication Station Stockton in Stockton, California (NCS Stockton). Conducted under the Comprehensive Long-Term Environmental Action Navy (CLEAN) program, Terra-Kleen remediated soils at NCS Stockton sites 5, 5G, and 5H, that were contaminated with the pesticides dichloro-diphenyldichloro-ethane (DDD), dichlorodiphenyl-dichloroethene (DDE), and dichlorodiphenyltrichloroethane (DDT). These sites reportedly contained DDD, DDE, and DDT at concentrations up to 150 mg/kg, 50 mg/kg, and 600 mg/kg, respectively.

The goal of the remediation was to reduce the concentrations of each pesticide below 1 mg/kg. This concentration was based on the threshold limit concentration for these compounds and was below the EPA Region 9 preliminary remediation goal for DDT in residential soil (1.3 mg/kg).

Prior to the full-scale remediation, Terra-Kleen conducted a bench-scale treatability study to determine the technology's suitability for treating the contaminated soils. Three, 4-inch composited soil samples were collected and treated. Ten grams of each of these samples underwent approximately 3 extraction cycles during this analytical procedure. Results showed that DDD, DDE, and DDT concentrations were all reduced to below 0.23 mg/kg in treated soil.

Based on the success of the bench-scale study, Terra-Kleen conducted a full-scale remediation on 400 cubic yards ($y^3$) or 550 tons of soil to reduce the concentration of pesticides below 1 mg/kg. Soils were excavated, homogenized, and placed into 20 $y^3$ extraction tanks. The SITE Program collected composite samples of untreated and treated soil from the first extraction tank and analyzed the samples specifically for DDD, DDE, and DDT.

After three extraction cycles, pesticide concentrations in the first solvent extraction tank were reduced significantly below the target level concentration of 1 mg/kg. Percent removals for all three pesticides ranged from 99.4 to 99.9 percent. Analytical results from the first extraction tank are shown in Table B- 1.

Results from the remaining 19 solvent extraction tanks indicated that treatment in 16 tanks achieved the target concentration goal. Percent removals in these 16 tanks ranged from 98.8 to 99.9 percent for all three pesticides. The soil in the three tanks that did not meet the target goal exhibited higher moisture content, possibly from rainwater intrusion. This increase in moisture content was dealt with by performing a vacuum extraction, followed by an additional application of the solvent treatment. Terra-Kleen reported that increased soil moisture will reduce treatment effectiveness.

The successful treatment of the NCS-Stockton soils has led the Navy to consider the Terra-Kleen technology at other sites at NCS-Stockton and at other naval facilities.

Table B-l. Full-Scale Analytical Results

| | DDD | DDE | DDT |
|---|---|---|---|
| Untreated Soil (mg/kg) | 12.2 | 1.5 | 80.0 |
| Treated Soil (mg/kg) | 0.024 | 0.009 | 0.093 |
| Percent Removal (%) | 99.8 | 99.4 | 99.9 |

Notes: All concentrations are presented in dry weight.
The soil from each subsample was transferred to a stainless-steel container and mixed to create a single composite sample; therefore, standard deviation could not be calculated.

# Appendix C
# Vendor Claims for the Terra-Kleen Technology

## C.I Acknowledgments

The development of the Terra-Kleen process has had many supporters from state and federal regulators, leaders in Congress and the White House, environmental assessment companies, citizen environmental groups, and industrial clients. Terra-Kleen wishes to thank these federal and state agencies, individuals and companies for the support received. Special thanks go to the US EPA's SITE team and its subcontractor PRC Environmental Management, Inc., which provided third party documentation of the process. We at Terra-Kleen are pleased that the results of the demonstration were favorable, and hope that all parties who have championed this technology development will feel justified in their support.

## C.2 Recent Developments

Based upon the work performed in the SITE demonstration, and other demonstrations of the full-scale unit, US EPA has issued to Terra-Kleen a nationwide permit to commercially treat soil contaminated with PCBs. At the time of writing, this is the only permitted non-thermal (incineration) treatment available for PCBs in soil. Both the pilot system and full-scale treatment system are permitted under a nationwide commercial operating permit through the US EPA as per the Toxic Substances and Control Act (TSCA) which regulates PCBs. The US EPA has made a written finding that "the Terra-Kleen solvent is non-toxic." The components of the solvent blend have been approved in limited quantities as "food additives for human consumption" by the US Food and Drug Administration.

As a result of system testing by the US EPA SITE Program and by the US EPA Chemical Management Division, Office of Pollution Prevention and Pesticides, EPA has proposed new regulations concerning PCB cleanup in soil and debris. New regulations proposed for 40 CFR 761.61(a)(4)(ii)(A)(4)(I) consistedofthe following:

"Bulk PCB remediation waste may be disposed of onsite using a solvent extraction process where: A non-chlorinated solvent is used; the solvent extraction process occurs at ambient temperature; the extraction process is not exothermic; and no external heat is used for the extraction process."

This is a direct description of the Terra-Kleen process, and is an indication of the level of confidence that US EPA has in this process.

The process has been selected for use by the US Navy through the Naval Environmental Leadership Program, of which Terra-Kleen was one of the first successful technologies demonstrated. The process is recently patented, and has other patents pending.

Terra-Kleen has currently expanded the pilot-scale treatment unit into full-scale permitted units. At this writing, a full-scale unit has been used to process four sites: the Naval Communication Station Stockton, where 500 tons of silty soil contaminated with chlorinated pesticides was treated; and Naval Air Station North Island, where soils from Installation Restoration Sites 4, 6, and 10 were processed. Approximately 6,000 tons of PCB-contaminated soil has been treated as of this writing, and the Navy is extending the contract to treat an additional 3,000 tons. Deployment at a remote Alaska site with PCB contamination is also scheduled, and several other full-scale projects are currently in negotiation, including two mixed waste sites.

Terra-Kleen has been selected for the Rapid Commercialization Initiative (RCI) by the sponsoring

organizations, US Department of Commerce, US Department of Defense, US Department of Energy, US Environmental Protection Agency, Southern States Energy Board, Western Governor's Association, and the State of California Environmental Protection Agency (CA EPA). The technologies selected under this competitive program will be assisted by the supporting agencies in reducing the barriers that impede market entry of the technology. RCI will provide assistance in finding appropriate sites for demonstration and testing, assistance in verification of the performance and cost of performance of RCI technologies, and assistance in facilitating and expediting the issuance of permits.

## C.3 System Improvements Since the SITE Demonstration

Terra-Kleen has worked with the California air boards in order to develop a tighter system that will virtually eliminate any air emissions of Terra-Kleen's non-toxic solvent. Currently patent pending, the system uses a totally closed air stream to remove the residual solvent from the soil at a rate much faster than conventional vapor recovery techniques. At the date of this writing, the new system has been used on two California sites successfully. Additions suggested by the air boards to the system also include equipment to reduce fugitive emissions from Terra-Kleen's solvent storage vessels.

The improvements to the vapor recovery portion of the system allow the microbes to thrive on reduced residual solvent levels. In third party tests, residual solvent levels as high as 3,000 mg/kg were reduced to less than 100 mg/kg in 4 days. Tests by US EPA indicate the half life of the solvent in the environment to be 2 days. The regulatory limits for the Terra-Kleen solvent in soil are not clear- the only reference Terra-Kleen could find was within RCRA, which limits the solvent to 240,000 mg/kg in the water portion of the soil.

Other improvements to the system include faster and more reliable material handling techniques. The full-scale version uses 20 cubic yard extraction bins which can handle debris up to 7 feet in length for processing.

Although the system was tested by the SITE team on sandy soils at North Island, the system can also be used on tighter soil. Soil fines at the Stockton site ranged from 24% to 60%. At this site, a chlorinated pesticide, DDT, was reduced from several hundred mg/kg to less than 1 mg/kg.

The system can be configured to do large sites and small sites. One great advantage of the system is the high mobility, which allows remote sites to be processed cost effectively. In Alaska, for example, use of the Terra-Kleen technology is cutting clean up costs of remote sites by over 50% as opposed to dig and haul, even on small sites.

Another great advantage of the Terra-Kleen system is that it is an excellent system to separate organic contaminants from low level radioactive wastes, allowing for economic disposal of mixed wastes. As a low energy system, the Terra-Kleen process does not mobilize soil fines out of the extraction vessels, thus leaving the radioactive soil in the extraction vessels while the organic contaminants are removed.

## C.4 Comments on the Results of the SITE Demonstration

Initial results after the fifth wash indicate that the PCB concentrations were approximately 0.5 mg/kg, much less than the final results of near 2 mg/kg. This was due to ponding in the bottom of the extraction tanks, which has been corrected. Soils currently run with the system, including soils from North Island, now average less than 1 mg/kg.

During the demonstration, a vapor extraction recovery system was used to remove residual solvent from the soil. Due to permit exemption requirements from the San Diego air district, the vapor recovery process could only be run 3 days. This was less than optimal, and resulted in anunusually high amount of residual solvent in the soil. At this point, solvent-consuming microbes and nutrients were added to the soil. Because ofresidual solvent levels at this point being as high as 40,000 mg/kg, the performance of the microbes was not optimized. Regardless, the microbial activity greatly reduced the solvent concentration in the 10 days that it was monitored. There appears to be little doubt that microbial activity will continue until all the solvent is consumed. It is also somewhat reassuring that solvent levels initially encountered by the microbes were not high enough to be toxic to the microbes. It is also important to note that even with solvent levels as high as 40,000 mg/kg, no PCBs were able to be mobilized out of the soil using a TCLP leaching procedure. Rain water or other natural water entering the soil does not mobilize any PCBs after treatment, even if high solvent levels are left in the soil.

Although only 5 tons of soil was treated during the site demonstration at NASNI, the principles for scale-up were determined, and were successfully implemented in full scale at several other sites. The results from full scale operations are better than from pilot scale, as may be expected after system improvements.

## C.5 System Advantages Over Other Remedial Options

### *C.5. I Conventional Technology Options*

Treatment with the Terra-Kleen solvent extraction system has several advantages over the conventional treatment of soil contaminated with semi-volatile and non-volatile organic chemicals. For many of the contaminants that Terra-Kleen specializes in, the soils can be landtilled at a specially permitted facility, or can be incinerated at the few permitted incinerators. EPA has recently "land banned" many chemicals spilled in soil, so that soils contaminated with these chemicals can only be disposed ofthrough incineration or an alternative technology such as Terra-Kleen. The current price for incineration is as high as $2,300 per cubic yard, not including the costs for transportation to the incinerator, and special hazardous waste taxes. (If the soils are contaminated with chlorinated dioxins, the incineration price can be as high as $16,000 per ton.) As many of the sites in Terra-Kleen's specialty may contain 1,000 to 50,000 cubic yards of contaminated soil, it can be seen that the costs involved with soil incineration are staggering. Mobile incineration facilities are typically less expensive, but are difficult to permit, and have poor community acceptance. Few people want an incinerator in their back yard. Terra-Kleen's treatment costs are typically 20% of incineration costs because only the waste is incinerated, not all the soil and debris.

Landfilling of the soils, when allowed, is typically in the $300 to $500 per cubic yard range when all costs are included (transportation, backfill, taxes, profile fees, manifest fees, tire wash, truck liners, etc.). Many generators of hazardous waste hesitate to landfill their soils because of the long term liability that can be associated with landfills. They see the problem moving from one area to the next area, instead of eliminating the problem. Landfilling's great advantage is that it is relatively inexpensive (in the short term, anyway). Terra-Kleen's advantage here is that it is cost competitive with landtilling on many sites, and yet the collected waste is destroyed. Additionally, since the technology is mobile, the problem is taken care of at the site, rather than having large volumes of contaminated material shipped though the community.

### *C. 5.2 Alterna tive Technology Options*

In addition to having advantages over conventional technologies such as incineration and landfilling, the Terra-Kleen technology has many advantages over alternative technologies such as bioremediation, soil vapor extraction, thermal desorption, and soil washing. Bioremediation, for example, is limited by a variety of conditions. Cold weather slows the process, lack of nutrients or oxygen slows or stops the process, selective compounds create more toxic compounds when biotreated, and bioremediation can not be used effectively on a variety of chemical compounds. Bioremediation may take up to 7 years to be implemented and be effective. Typically, bioremediation is used for volatile and semi-volatile contaminants such as gasoline, and can not be used effectively on the chemicals that Terra-Kleen processes.

Like bioremediation, soil vapor extraction (SVE) is used principally for volatile and some semi-volatile organic contaminants. SVE can not process sites contaminated with non-volatile organic constituents such as chlorinated pesticides or PCBs.

Thermal desorption works very well for volatile compounds, moderately well for semi-volatile compounds, and poorly on non-volatile compounds. As the range of contaminants to be treated become less volatile, more and more heat is needed to remove the contaminants from soil. Thermal desorption systems can treat the contaminants also processed by Terra-Kleen, but only with very costly equipment. Mobilization fees to move a thermal desorption system that treats PCBs may run as high as $1,400,000. Only very large sites can afford this type of mobilization cost. Terra-Kleen sizes the treatment unit to the size of the site, rather than using a "one shoe fits all" approach. In this fashion, smaller sites can be cleaned cost effectively in addition to larger sites.

Soil washing is similar to solvent extraction, in that they both use fluids to separate the contaminants from soil. Soil washing concentrates the contaminants into a specific size segment of the soil, such as the fines, while solvent extraction only removes the contaminants themselves. Soil washing thereby generates more waste that needs to be removed

from the site. Soil washing also generates large quantities of waste water, while solvent extraction systems are typically closed loop systems that clean and reuse the solvent. Solvent extraction processes can reach much lower target treatment levels than soil washing.

As can be seen, Terra-Kleen's solvent extraction system has many advantages over conventional and alternative treatment technologies for selected contaminant types. The process is not designed to be a solution for every type of contamination, but to be a cost effective treatment for selected contaminate types.

## C.6 Types of Sites Best Suited to Terra-Kleen's Technology

### *C.6.7 PCBs*

#### Electrical Utility Companies

These companies have electrical transformers that use PCBs. Although many electric companies have changed out their transformers, older spill sites are still a problem for many of the utilities. The utility companies typically do not want to landfill the contaminated soil as there is a perception of long-term liability.

#### Natural Gas Pipeline Companies

PCBs were used in compressor stations along most of the natural gas pipeline systems. As PCB-contaminated oils and condensates built up in the lines, they were swept out with "pigs" to various dumping points. The dumping points and the surrounding soils now need to be cleaned at all of these stations.

#### Industrial Manufacturing

PCBs were used in transformers and capacitors within the manufacturing areas. Leaks and vandalism of transformers in older buildings to obtain the copper wiring have left many buildings and the soils around the buildings contaminated with PCBs.

#### Electrical Transformer Repair Facilities

Several companies have specialized in transformer servicing and repair. During these operations, PCB-contaminated oils were dumped into pits. These pits and the surrounding soils now need to be cleaned.

#### Mixed Waste Sites

Terra-Kleen has the ability to separate PCBs from low level radioactive wastes. The PCBs and low level radioactive waste can then be disposed of separately.

#### Department of Defense Sites

All military bases used substantial numbers of PCB transformers. Many of the older transformers were stored in one location, and subsequently began to leak. With the shutdown of these military bases, all PCB sites must be cleaned.

#### Overseas PCB Sites in US Territories, Alaska, Hawaii

Due to PCB regulations, contaminated soils are currently shipped to the continental US for disposal. This is very expensive. Terra-Kleen has equipment specially constructed for use at remote sites that can be shipped or air-lifted for a nominal cost. Savings to the client are approximately 50% over conventional methods.

#### Superfund Sites

EPA has identified 34,070,000 cubic yards (approximately 50,000,000 tons) of PCB-contaminated soil on National Priority List (NPL) Superfund sites. In addition to NPL sites, there are over 2,000 additional sites within Superfund that have PCBs as the predominant waste.

### *C. 6.2 Chlorinated Pesticides*

#### Pesticide Manufacturing and Mixing Areas

These sites are highly contaminated with chlorinated pesticides. They usually are several acres in size, with contamination typically concentrated within 6 feet of the surface. Many of these sites are Superfund sites.

### Department of Defense Sites

Many military bases routinely stored, mixed, and used large volumes of chlorinated pesticides such as DDT. Soils surrounding mixing and storage sites are often contaminated with these chemicals. As the military bases close, the need to clean these sites intensifies.

### Crop Dusting Airports

Municipal airports which supported crop dusting operations are contaminated with a variety of chlorinated pesticides. The crop dusting planes would often dump any excess pesticide mixture at the end of the runway prior to landing as a safety precaution. The washout stations where the planes would be cleaned are also contaminated.

### Cattle Dipping Stations

Cattle were often dipped in toxaphene baths to kill parasites. As more farmland is being converted to development, these contaminated sites are being identified and need to be cleaned before the land can be used.

## C. 6.3 Mixed Wastes

### Organic Wastes Mixed with Low-Level Radioactive Wastes

The Terra-Kleen system is an excellent system to separate organic contaminants from low level radioactive wastes, allowing for economic disposal of mixed wastes. As a low energy system, soil fines are not mobilized out of the extraction vessels, thus leaving the radioactive soil in the extraction vessels while the organic contaminants are removed.

Removing PCBs from low level radioactive waste allows the PCBs and low level radioactive waste to be sent to separate disposal facilities. As the Terra-Kleen system is the only non-thermal, full-scale commercial operating facility to be permitted to process PCB wastes, regulatory problems regarding mixed waste disposal can be solved by using this system.

Other organic contaminants can be removed from low level radioactive waste as well. Terra-Kleen employs a patent-pending, dustless drying system that can separate volatile organic contaminants from soil, as well as semi-volatile and non-volatile organic contaminants.

## C. 6.4 Wood Preservatives

### Electric and Telephone Utility Companies/ Wood Products Companies

Creosote and pentachlorophenol have been used to treat telephone and electric poles. The pole yards where these poles were treated have been heavily contaminated. These sites typically cover acres ofground, with the contamination concentrated in the top 6 feet of soil.

### Railroads

Creosote and pentachlorophenol were used extensively to treat the railroad ties that are used to hold the train tracks. The yards where these ties were treated are heavily contaminated.

## C. 6.5 Miscellaneous Chemicals

### Chemical Manufacture and Distribution

Several chemical manufacturing facilities and distribution facilities are contaminated with a whole sweep of contaminants. Many are NPL sites within Superfund. These sites have been extensively studied and litigated, and are starting remedial activities.

### Department of Defense

Military bases that have stored chlorinated herbicides such as Agent Orange and other chemicals such as nerve gases need to be cleaned.

### Coal Gasification Sites

Many areas where coal gas was manufactured in the early 1900s are contaminated with polycyclic aromatic hydrocarbons. These areas are well-suited to treatment with solvent extraction technology.