ENTERED

Los Alamos Environmental Restoration Records Processing Facility

ER Record I.D.# 64050

LOS ALAMOS NATIONAL LABORATORY
ENVIRONMENTAL RESTORATION
Records Processing Facility
ER Records Index Form

ER ID NO. 64050 *Date Received:* 9/9/99 *Processor:* YCA *Page Count:* 122

Privileged: (Y/N) N *Record Category:* P

FileFolder: N/A

Correction: (Y/N) N *Corrected No.* 0 *Corrected By Number:* 0

Administrative Record: (Y/N) Y

Refilmed: (Y/N) N *Old ER ID Number:* 0 *New ER ID Number:* 0

Miscellaneous Comments:
REFERENCE CITED

32062

THIS FORM IS SUBJECT TO CHANGE. CONTACT THE RPF FOR LATEST VERSION. (JUNE 1997)

(122)

#64050

WASTEWATER STREAM CHARACTERIZATION FOR TA 50

at

Los Alamos National Laboratory

ENVIRONMENTAL STUDY

CHARACTERIZATION REPORT #72

REVISION NO. 1
REVISION DATE: 3/94
COPY NO. 2
ISSUED TO:

SEP 09 1999
YMA

ENVIRONMENTAL MANAGEMENT DIVISION
Los Alamos National Laboratory
Los Alamos, New Mexico 87545

Los Alamos

Los Alamos National Laboratory is operated by the University of California for the United States Department of Energy

WASTEWATER STREAM CHARACTERIZATION FOR TA 50, ALL BUILDINGS

ENVIRONMENTAL STUDY

prepared for:
THE LOS ALAMOS NATIONAL LABORATORY
Los Alamos, New Mexico

under subcontract 9-XG8-2874P-1

by:
Santa Fe Engineering, Ltd.
1429 Second Street
Santa Fe, New Mexico 87505
(505) 988-7438

July, 1993

Updated Per ESH-8 Comments March 1994

10) from 50-69: one sanitary sewer connection, two radioactive liquid waste lines, four fire system drains, six storm water outfalls, four canales, a breathing air vent, a breathing air pressure relief valve, two capped stubs, a stack drain, a secondary containment drain, a radioactive liquid storage tank vent and one unknown outfall,

11) from 50-83: one non-potable water line and one unused electrical conduit stub out,

12) from 50-84: a sanitary sewer connection, a drain from an evaporative cooler, a roof downspout and a water heater pressure relief valve,

13) from 50-90: two radioactive liquid storage tank drains and two radioactive liquid waste lines,

14) from 50-107: one stack drain,

15) from 50-183: a fuel tank drain, a fuel line to the diesel, an overflow from the diesel, a tank vent and a containment vault vent,

16) from 50-185: a non-potable water line, a tertiary containment drain, a condensate drain from an evaporative cooler and two breathing air vents,

17) from 50-191: a vapor exhaust, a stub out and an oil drain.

Revised application forms have been included for the one permitted outfall. Flows shown on the included forms are estimated from site observations and discussions with users and analytical data are defined from information obtained from previously sampled outfalls.

Recommendations for repiping are provided to permit outfall consolidation to minimize permit maintenance requirements and to bring the facility into compliance with the Laboratory's NPDES permits and Environmental policies. Floor drain plugging and spill containment is recommended where the potential for discharge of pollutants exists.

A waste stream database has been prepared listing wastewater type and flow rate for each outfall.

TABLE OF CONTENTS

1.0 INTRODUCTION 1

2.0 FIELD INVESTIGATION 3

3.0 RECOMMENDATIONS FOR BUILDING 50-1 4

3.1 Outfall 50-1-OPN-1 4
3.2 Outfall 50-1-OPN-2 4
3.3 Outfall 50-1-OPN-3 5
3.4 Outfall 50-1-OPN-4 5
3.5 Outfall 50-1-OPN-5 6
3.6 Outfalls 50-1-OPN-6, 50-1-OPN-7, and 50-1-OPN-8 6
3.7 Outfall 50-1-OPN-9 6
3.8 Outfall 50-1-OPN-10 7
3.9 Outfall 50-1-OPN-11 7
3.10 Outfall 50-1-OPN-12 7
3.11 Outfall 50-1-OPN-13 8
3.12 Outfall 50-1-OPN-14 8
3.13 Outfall 50-1-OPN-15 8
3.14 Outfalls 50-1-OPN-16, 50-1-OPN-17, 50-1-OPN-18, 50-1-OPN-19, 50-1-OPN-20, 50-1-OPN-21 and 50-1-OPN-22 9
3.15 Outfalls 50-1-OPN-23, 50-1-OPN-24, 50-1-OPN-25, 50-1-OPN-26, 50-1-OPN-27 and 50-1-OPN-28 9
3.16 Outfalls 50-1-OPN-29 and 50-1-OPN-30 9
3.17 Outfalls 50-1-OPN-31 and 50-1-OPN-32 9
3.18 Outfalls 50-1-OPN-33, 50-1-OPN-34 and 50-1-OPN-35 9
3.19 Outfall 50-1-OPN-36 10
3.20 Outfalls 50-1-OPN-37 and 50-1-OPN-38 10
3.21 Outfalls 50-1-OPN-39 and 50-1-OPN-40 10
3.22 Outfall 50-1-OPN-41 10
3.23 Outfall 50-1-OPN-42 10
3.24 Outfall 50-1-OPN-43 10
3.25 Outfall 50-1-OPN-44 11
3.26 Outfall 50-1-OPN-45 11
3.27 Outfalls 50-1-OPN-46 and 50-1-OPN-47 11
3.28 Outfall 50-1-OPN-48 11
3.29 Outfall 50-1-OPN-49 11
3.30 Outfall 50-1-OPN-50 11
3.31 Outfall 50-1-OPN-52 12
3.32 Outfalls 50-1-OPN-51, 50-1-OPN-53, 50-1-OPN-54, 50-1-OPN-55, 50-1-OPN-56 and 50-1-OPN-57 12

3.33 Outfalls 50-1-OPN-58, 50-1-OPN-59, 50-1-OPN-60, 50-1-OPN-61, 50-1-OPN-62, 50-1-OPN-63, 50-1-OPN-64, 50-1-OPN-65, 50-1-OPN-66, 50-1-OPN-67 and 50-1-OPN-68 12

4.0 RECOMMENDATIONS FOR BUILDING 50-2 12

4.1 Outfall 50-2-OPN-1 13
4.2 Outfall 50-2-OPN-2 13

5.0 RECOMMENDATIONS FOR BUILDING 50-4 13

6.0 RECOMMENDATIONS FOR BUILDING 50-5 14

7.0 RECOMMENDATIONS FOR BUILDING 50-37 14

7.1 Outfall 50-37-OPN-1 14
7.2 Outfall 50-37-OPN-2 15
7.3 Outfall 50-37-OPN-3 15
7.4 Outfall 50-37-OPN-4 16
7.5 Outfalls 50-37-OPN-5, 50-37-OPN-6, 50-37-OPN-7, 50-37-OPN-8, 50-37-OPN-9, 50-37-OPN-10, 50-37-OPN-11, 50-37-OPN-12 and 50-37-OPN-13 16
7.6 Outfall 50-37-OPN-14 16
7.7 Outfall 50-37-OPN-15 16
7.8 Outfalls 50-37-OPN-16 and 50-37-OPN-17 17
7.9 Outfalls 50-37-OPN-18 and 50-37-OPN-19 17
7.10 Outfall 50-37-OPN-20 17
7.11 Outfall 50-37-OPN-21 17
7.12 Outfalls 50-37-OPN-22, 50-37-OPN-23, 50-37-OPN-24, 50-37-OPN-25, 50-37-OPN-26, 50-37-OPN-27, 50-37-OPN-28 and 50-37-OPN-29 17
7.13 Outfalls 50-37-OPN-30, 50-37-OPN-31, 50-37-OPN-32 50-37-OPN-33, 50-37-OPN-34, 50-37-OPN-35, 50-37-OPN-36 and 50-37-OPN-37 18
7.14 Outfalls 50-37-OPN-38, 50-37-OPN-39, 50-37-OPN-40 and 50-37-OPN-41 18

8.0 RECOMMENDATIONS FOR BUILDING 50-42 18

9.0 RECOMMENDATIONS FOR BUILDING 50-48 18

9.1 Outfall 50-48-OPN-1 19
9.2 Outfalls 50-48-OPN-2, 50-48-OPN-3, 50-48-OPN-4, 50-48-OPN-6, 50-48-OPN-7 and 50-48-OPN-8 19
9.3 Outfall 50-48-OPN-5 19

10.0 RECOMMENDATIONS FOR BUILDING 50-54 19

10.1 Outfall 50-54-OPN-1 19
10.2 Outfall 50-54-OPN-2 20
10.3 Outfall 50-54-OPN-3 20
10.4 Outfalls 50-54-OPN-4, 50-54-OPN-5, 50-54-OPN-6 and 50-54-OPN-7 20
10.5 Outfalls 50-54-OPN-8, 50-54-OPN-9, 50-54-OPN-10 and 50-54-OPN-11 20
10.6 Outfalls 50-54-OPN-12 and 50-54-OPN-13 21

11.0 RECOMMENDATIONS FOR BUILDING 50-66 21

12.0 RECOMMENDATIONS FOR BUILDING 50-69 21

12.1 Outfall 50-69-OPN-1 21
12.2 Outfall 50-69-OPN-2 21
12.3 Outfall 50-83-OPN-3 22
12.4 Outfalls 50-69-OPN-4, 50-69-OPN-5, 50-69-OPN-6 and 50-69-OPN-7 22
12.5 Outfalls 50-69-OPN-8, 50-69-OPN-9, 50-69-OPN-10, 50-69-OPN-11, 50-69-OPN-12 and 50-69-OPN-13 22
12.6 Outfalls 50-69-OPN-14, 50-69-OPN-15, 50-69-OPN-16 and 50-69-OPN-17 22
12.7 Outfalls 50-69-OPN-18 and 50-69-OPN-19 23
12.8 Outfalls 50-69-OPN-20 and 50-69-OPN-21 23
12.9 Outfall 50-69-OPN-22 23
12.10 Outfall 50-69-OPN-23 23
12.11 Outfall 50-69-OPN-24 23
12.12 Outfall 50-69-OPN-25 24
12.13 Outfall 50-69-OPN-26 24

13.0 RECOMMENDATIONS FOR BUILDING 50-83 24

13.1 Outfall 50-83-OPN-1 24
13.2 Outfall 50-83-OPN-2 25

14.0 RECOMMENDATIONS FOR BUILDING 50-84 25

14.1 Outfall 50-84-OPN-1 25
14.2 Outfall 50-84-OPN-2 25
14.3 Outfall 50-84-OPN-3 25
14.4 Outfall 50-84-OPN-4 26

15.0 RECOMMENDATIONS FOR BUILDING 50-90 26

15.1 Outfalls 50-90-OPN-1 and 50-90-OPN-2 26
15.2 Outfalls 50-90-OPN-3 and 50-90-OPN-4 26

16.0 RECOMMENDATIONS FOR BUILDING 50-94 26

17.0 RECOMMENDATIONS FOR BUILDING 50-105 27

18.0 RECOMMENDATIONS FOR BUILDING 50-106 27

19.0 RECOMMENDATIONS FOR BUILDING 50-107 27

20.0 RECOMMENDATIONS FOR BUILDING 50-114 27

21.0 RECOMMENDATIONS FOR BUILDING 50-117 27

22.0 RECOMMENDATIONS FOR BUILDING 50-118 28

23.0 RECOMMENDATIONS FOR BUILDING 50-119 28

24.0 RECOMMENDATIONS FOR BUILDING 50-125 28

25.0 RECOMMENDATIONS FOR BUILDING 50-135 28

26.0 RECOMMENDATIONS FOR BUILDING 50-148 28

27.0 RECOMMENDATIONS FOR BUILDING 50-160 28

28.0 RECOMMENDATIONS FOR BUILDING 50-183 29

28.1 Outfall 50-183-OPN-1 29
28.2 Outfall 50-183-OPN-2 29
28.3 Outfall 50-183-OPN-3 29
28.4 Outfall 50-183-OPN-4 29
28.5 Outfall 50-183-OPN-5 30

29.0 RECOMMENDATIONS FOR BUILDING 50-184 30

30.0 RECOMMENDATIONS FOR BUILDING 50-185 30

30.1 Outfall 50-185-OPN-1 30
30.2 Outfall 50-185-OPN-2 30
30.3 Outfall 50-185-OPN-3 31
30.4 Outfalls 50-185-OPN-4 and 50-185-OPN-5 31

31.0 RECOMMENDATIONS FOR BUILDING 50-191 31

31.1 Outfall 50-191-OPN-1 31
31.2 Outfall 50-191-OPN-2 31
31.3 Outfall 50-191-OPN-3 32

32.0 CONCLUSION 33

APPENDICES

Appendix 1 - DRAIN SUMMARY TABLES
Appendix 2 - WASTESTREAM CHARACTERIZATION DATABASE
Appendix 3 - EPA FORMS
Appendix 4 - DYE STUDY INFORMATION
Appendix 5 - DRAIN SCHEMATICS

LIST OF TABLES

1. SUMMARY OF ABBREVIATIONS
2. TA 50-1 DRAIN SUMMARY
3. TA 50-2 DRAIN SUMMARY
4. TA 50-4 DRAIN SUMMARY
5. TA 50-5 DRAIN SUMMARY
6. TA 50-37 DRAIN SUMMARY
7. TA 50-42 DRAIN SUMMARY
8. TA 50-48 DRAIN SUMMARY
9. TA 50-54 DRAIN SUMMARY
10. TA 50-69 DRAIN SUMMARY
11. TA 50-83 DRAIN SUMMARY
12. TA 50-84 DRAIN SUMMARY
13. TA 50-90 DRAIN SUMMARY
14. TA 50-107 DRAIN SUMMARY
15. TA 50-183 DRAIN SUMMARY
16. TA 50-185 DRAIN SUMMARY
17. TA 50-191 DRAIN SUMMARY
18. NON-DRAIN RECOMMENDATIONS

LIST OF FIGURES

1. TA-50 PARTIAL SITE PLAN
2. TA-50-1 BASEMENT DRAIN SCHEMATIC
3. TA-50-1 FIRST FLOOR DRAIN SCHEMATIC
4. TA-50-1 STORM DRAIN SCHEMATIC
5. TA-50-2 DRAIN SCHEMATIC
6. TA-50-4 DRAIN SCHEMATIC
7. TA-50-5 DRAIN SCHEMATIC
8. TA-50-37 FIRST FLOOR DRAIN SCHEMATIC
9. TA-50-37 SECOND FLOOR DRAIN SCHEMATIC
10. TA-50-37 STORM DRAIN SCHEMATIC
11. TA-50-42 DRAIN SCHEMATIC
12. TA-50-48 DRAIN SCHEMATIC
13. TA-50-54 DRAIN SCHEMATIC
14. TA-50-69 DRAIN SCHEMATIC
15. TA-50-83 DRAIN SCHEMATIC
16. TA-50-84 DRAIN SCHEMATIC
17. TA-50-90 DRAIN SCHEMATIC
18. TA-50-107 DRAIN SCHEMATIC
19. TA-50-183 DRAIN SCHEMATIC
20. TA-50-185 DRAIN SCHEMATIC
21. TA-50-191 DRAIN SCHEMATIC

1.0 INTRODUCTION

During May and June, 1993, David Scherer of Santa Fe Engineering (SFE) toured buildings 1, 2, 4, 5, 37, 38, 42, 48, 54, 66, 69, 83, 84, 90, 94, 105, 106, 107, 114, 117, 118, 119, 125, 135, 148, 160, 183, 184, 185, 189 and 191 at TA-50. The purpose of this study is to identify building drain piping and to characterize the wastewater flows and sources existing at the time of the visit. At the time this study was conducted all TA-50 sanitary sewage was discharged to the 01S sanitary sewer outfall via the 13S collection system. This report will not reflect any subsequent changes in piping or operation. The Waste Stream Characterization Policy of September 10, 1992 was followed for this study. The following tasks were performed for this purpose:

1. Building drains and all piping exiting the building were identified and laid out in schematic form;

2. Wastewater sources were identified at each drain, and the wastewater was characterized according to flow rate and quality. The location of outfalls and their potential sources of discharge were determined. Potential pollutants were also noted;

3. Permit application for discharges of clean water were not prepared since these discharges do not require permitting at this time and,

4. Potential problems were identified and recommendations were made for repiping, floor drain plugging and spill containment, where deemed appropriate.

The field investigation proceeded by verifying drain schematic drawings prepared by SFE for the appropriate buildings (Figures 2 through 21) from drawings provided by Los Alamos

National Laboratory (LANL) Facilities Engineering Division. The other buildings were visited to insure that no drains exist for the buildings. The following process was used to define drain piping and characterize the wastewater streams:

1. Laboratory engineering drawings were used to prepare the SFE drain piping schematics. The Solid Waste Stream Characterization conducted by IT Corporation was also reviewed. The National Pollutant Discharge Elimination System (NPDES) Permit, the 1990 NPDES Permit Application submitted by Los Alamos National Laboratory (LANL) in September, 1990, the latest Federal Facilities Compliance Agreement (FFCA) between the Department of Energy (DOE) and the Environmental Protection Agency (EPA) and the Administrative Order (AO) Docket Number VI-92-1306 issued by EPA to the University of California were used for reference;

2. SFE verified drain piping by dye checking and

3. A site visit was performed to verify the SFE drain schematics and to identify potential outfall pipes exiting the building. The visit entailed a room by room inspection of wastewater sources and drains. Interviews with site personnel were conducted to assist in wastestream characterization.

2.0 FIELD INVESTIGATION

The pipes exiting the building have been assigned Outlet Piping Numbers. The four part number, sequentially, identifies the Technical Area where the pipe is located, the building from which the pipe discharges, the letters OPN to indicate that it is an outlet pipe number and the unique number for the pipe. The piping exiting the building will be labeled for easy identification in the future.

Each drain has a unique identification number. Each number consists of three parts. The first part indicates the floor on which the drain is located. The second part has letters that indicate the type of drain (see Table 1). The final part is the unique number for the drain. For example, the first floor drain in the sequence on the basement floor of a building would be labeled BFD1. Similarly, the first Roof Drain in a sequence would be identified as RD1.

The functions of each pipe exiting from the buildings are listed in Appendix 1, Tables 2 through 17, with an abbreviations list in Table 1. Table 18 in Appendix 1 contains recommendation information that is not specific to individual drains. Appendix 2 contains the wastestream characterization database output, listing wastewater source, flow rates and periodicity information for each outfall drain. Completed EPA forms are in Appendix 3 for the appropriate outfalls. Appendix 4 provides dye study information. Flow schematics of the drains from each building are attached in Appendix 5 as Figures 2 through 21. Figure 1 of Appendix 5 is a site plan of TA-50.

3.0 RECOMMENDATIONS FOR BUILDING 50-1

Building 1 is the TA-50 waste treatment processing plant. This facility receives waste from TAs 2, 3, 16, 21, 35, 43, 48, 50, 53, 55 and 59 either through direct piping or via truck. Table 2 is a list of the drains to the building outfalls and Figures 2, 3 and 4 are schematics of the drain piping. Table 2 lists the drains that connect to the outfall pipe and includes recommendations for changes to the drain piping. The discussion below gives the reasoning for these recommendations.

3.1 Outfall 50-1-OPN-1

This outfall is from sanitary facilities and flows into a sewer lift station which flows to the TA-50 sanitary sewer system. Sanitary facilities that flow to this outfall include restroom floor drains (2), lavatories (2), toilets (2), and a urinal (1). No chemicals are drained into any of the drains or fixtures. No changes or permits are recommended for this outfall. No EPA forms were prepared.

3.2 Outfall 50-1-OPN-2

This outfall is from sanitary facilities and flows into a sewer lift station which flows to the TA-50 sanitary sewer system. Sanitary facilities that flow to this outfall include equipment drains (3), floor drains (7), lavatories (6), sink drains (3), showers (6), toilets (5), urinals (3), water fountains (2) and potable water back flow preventers (BFPs) (2). Floor drains, BFD5 and BFD8, are located in separate filter rooms that adjoin equipment room 14. Neither of these drains could be located and their existence should be verified by the user. Plugging of these drains is recommended. Equipment drain, BED2, is located in equipment room 14 and receives inputs from two air compressor drains, two compressed air tank drains and condensate from an air conditioning unit. Due to the presence of oil in the

compressed air from the compressors, the air in the air tanks and the large volume of flow from these sources, it is recommended that they be piped through an oil/water separator before flowing to the sanitary system. Floor drains BFD3, BFD4, BFD6 and BFD7 are located in equipment room 14. BFD3 receives flow from floor washings. BFD4 receives inputs from four boiler pressure relief valves (PRVs), an expansion tank drain, two boiler regulator valves, two water heater PRVs, and two boiler drains. BFD6 receives inputs from a hot water drain, an expansion tank drain and a boiler drain. BFD7 receives inputs from a condenser drain, condensate from chillers via first floor equipment drains, 1ED1 and 1ED2, a hot water drain and two back flow preventers (BFPs). Floor drain, BFD27, located in equipment room 30 receives input from an air compressor drain and an aftercooler drain. It is recommended that the flow from the air compressor drain be containerized to prevent the introduction of oil into the sanitary system. It is also recommended that equipment drains 1ED1 and 1ED2 and sink drains 1SD1, 1SD4 and 1SD5 be labeled "SANITARY WASTE ONLY - NO CHEMICAL DISPOSAL". No permits are recommended. No EPA forms were prepared.

3.3 Outfall 50-1-OPN-3

This outfall is from sanitary facilities and flows into a sewer lift station which flows into the TA-50 sanitary sewer system. Sanitary facilities that flow to this outfall include a sink drain (1) and a water fountain (1). The sink should be labeled "SANITARY WASTE ONLY - NO CHEMICAL DISPOSAL". No changes or permits are recommended for this outfall. No EPA forms were prepared.

3.4 Outfall 50-1-OPN-4

This outfall is from radioactive liquid waste facilities and flows to the building 50-2 RLW holding tanks for treatment.

This outfall includes waste from floor drains (2) and a sink drain (1). Two sink drains that once drained to this outfall have been removed. The floor drains, 1FD1 and 1FD2, are located in first floor restrooms and it is recommended that these be repiped to the sanitary sewer system. No permits are recommended. NO EPA forms were prepared.

3.5 Outfall 50-1-OPN-5

This outfall is from radioactive liquid waste facilities and flows to building 50-2 RLW holding tanks for treatment. This outfall includes waste from cup drains (4), a dishwasher (1), floor drains (6), sink drains (4) and BFPs (2). No changes or permits are recommended. No EPA forms were prepared.

3.6 Outfalls 50-1-OPN-6, 50-1-OPN-7 and 50-1-OPN-8

These outfalls are from radioactive liquid waste facilities and flow to building 50-2 RLW holding tanks for treatment. Outfalls 50-1-OPN-6 and 50-1-OPN-8 are from floor drains located in cadaver tanks in room 36. Outfall 50-1-OPN-7 is from an equipment drain on an autopsy table, also in room 36. No changes or permits are recommended. No EPA forms were prepared.

3.7 Outfall 50-1-OPN-9

This outfall is from radioactive liquid waste facilities and flows to building 50-2 RLW holding tanks for treatment. This outfall includes waste from an area drain (1), a floor drain (1) and a sink drain (1). The area drain, BAD1 is outside the building and should have a roof built over it and the drain bermed to prevent unnecessary treatment of storm water or be plugged and covered if no longer used. No permits are recommended. No EPA forms were prepared.

3.8 Outfall 50-1-OPN-10

This outfall is from radioactive liquid waste facilities and flows to building 50-2 RLW holding tanks for treatment. This outfall includes waste from a cup drain (1), a floor drain (1) and a sink drain (1). No changes or permits are recommended. No EPA forms were prepared.

3.9 Outfall 50-1-OPN-11

This outfall is from radioactive liquid waste facilities and flows to building 50-2 RLW holding tanks for treatment. This outfall includes waste from a floor drain (1). No changes or permits are recommended. No EPA forms were prepared.

3.10 Outfall 50-1-OPN-12

This outfall is from radioactive liquid waste facilities and flows to building 50-2 RLW holding tanks for treatment. This outfall includes waste from cup drains (24), dishwashers (5), equipment drains (4), floor drains (7), sink drains (31), and water fountains (2). Sink drains, 1SD9 and 1SD10, are located in room 123A. This room is currently being used as an office. These sink drains should either be repiped to the sanitary sewer system or removed in order to reduce treatment of unnecessary non-radioactive liquid waste flows. Floor drain, BFD29, located in the hazardous waste plant, room 24, has been plugged but its appearance does not indicate this. To prevent the attempted use of the drain it is recommended that this drain be completely covered. Sink drain, BSD1, is located in the janitor's closet, room 7JC, and water fountain, BWF1, is located in the corridor in the north end of the basement floor. Again, in order to avoid treatment of non-RLW flows it is recommended that these drains be repiped to the sanitary sewer system. The sink should then be labeled "SANITARY WASTE ONLY - NO CHEMICAL DISPOSAL". NO EPA forms were prepared.

3.11 Outfall 50-1-OPN-13

This outfall is from radioactive liquid waste facilities and flows to building 50-2 RLW holding tanks for treatment. This outfall includes waste from an area drain (1) and floor drains (22). Area drain, BAD2, is located outside the building. It is recommended that a roof be provided for this drain and the drain bermed to prevent the unnecessary treatment of storm water. Floor drain, BFD12, is located in the process plant, room 16, and receives input from an air compressor drain, two air dryers and gland sealing drains from two radioactive waste pumps. It is recommended that the flow from the air compressor drain be containerized. No permits are recommended. NO EPA forms were prepared.

3.12 Outfall 50-1-OPN-14

This outfall is from radioactive liquid waste facilities and flows to building 50-2 RLW holding tanks for treatment. This outfall receives waste from an acid tank in the processing plant. No changes or permits are recommended. No EPA forms were prepared.

3.13 Outfall 50-1-OPN-15

This outfall is from radioactive liquid waste facilities and flows to building 50-2 RLW holding tanks for treatment. This outfall includes waste from floor drains (3). No changes or permits are recommended. No EPA forms were prepared.

3.14 Outfalls 50-1-OPN-16, 50-1-OPN-17, 50-1-OPN-18, 50-1-OPN-19, 50-1-OPN-20, 50-1-OPN-21 and 50-1-OPN-22

These outfalls are from natural gas vents and discharge to the atmosphere. No changes or permits are recommended. No EPA forms were prepared.

3.15 Outfalls 50-1-OPN-23, 50-1-OPN-24, 50-1-OPN-25, 50-1-OPN-26, 50-1-OPN-27 and 50-1-OPN-28

These outfalls are from fire system drains and discharge to daylight. They should be covered by a Notice of Intent to Discharge (NOI). No EPA forms were prepared.

3.16 Outfalls 50-1-OPN-29 and 50-1-OPN-30

These outfalls are from water heater PRVs and discharge to daylight. They should be covered by an NOI. No EPA forms were prepared.

3.17 Outfalls 50-1-OPN-31 and 50-1-OPN-32

These outfalls are from chilled water system connections and discharge to daylight. They should be covered by an NOI. No EPA forms were prepared.

3.18 Outfalls 50-1-OPN-33, 50-1-OPN-34 and 50-1-OPN-35

These outfalls are from stack drains and discharge storm water to daylight. It is recommended that these drains be tested for possible radioactive contamination. If present, these drains should be containerized for treatment as RLW. No EPA forms were prepared.

3.19 Outfall 50-1-OPN-36

This outfall is from a compressed air connection and discharges to the atmosphere. No changes or permits are recommended. No EPA forms were prepared.

3.20 Outfalls 50-1-OPN-37 and 50-1-OPN-38

These outfalls are non-potable water drains and discharge to building 50-2, via area drain BAD2, for treatment. No changes or permits are recommended. No EPA forms were prepared.

3.21 Outfalls 50-1-OPN-39 and 50-1-OPN-40

These outfalls are from a caustic tank and discharge to building 50-2, via area drain BAD2, for treatment. No changes or permits are recommended. No EPA forms were prepared.

3.22 Outfall 50-1-OPN-41

This outfall is from a nitrogen tank fill line and discharges to the atmosphere. No changes or permits are recommended. No EPA forms were prepared.

3.23 Outfall 50-1-OPN-42

This outfall is from a BFP and discharges to daylight. It should be covered by an NOI. No EPA forms were prepared.

3.24 Outfall 50-1-OPN-43

This outfall is from an acid tank vent and discharges to the atmosphere. No changes or permits are recommended. No EPA forms were prepared.

3.25 Outfall 50-1-OPN-44

This outfall is a sampling line off the 051051 permitted outfall from building 50-2. This line is used to sample flow when treated waste is being discharged. No changes or permits are recommended. No EPA forms were prepared.

3.26 Outfall 50-1-OPN-45

This outfall is an electrical conduit and has no flow. No changes or permits are recommended. No EPA forms were prepared.

3.27 Outfalls 50-1-OPN-46 and 50-1-OPN-47

These outfalls are from dishwasher vents and discharge to the atmosphere. No changes or permits are recommended. No EPA forms were prepared.

3.28 Outfall 50-1-OPN-48

This outfall is a vent from a chemical reactor vessel located in the hazardous waste plant and discharges to the atmosphere. No changes or permits are recommended. No EPA forms were prepared.

3.29 Outfall 50-1-OPN-49

This outfall is a vent from compressed gas bottles and discharges to the atmosphere. No changes or permits are recommended. No EPA forms were prepared.

3.30 Outfall 50-1-OPN-50

This outfall is from the exhaust of a vacuum pump located in the vacuum filter room and discharges to the atmosphere. No changes or permits are recommended. No EPA forms were prepared.

3.31 Outfall 50-1-OPN-52

This outfall is a storm water drain. It includes drains from floor drains (2) and roof drains (8). The floor drains, PFD1 and PFD2, are located in the penthouse. It is recommended that the flow from these floor drains be repiped to the sanitary sewer system or be plugged. PFD1 receives very infrequent discharge from a distilled water tank drain. PFD2 receives no direct sources. No permitting is recommended, however, an EPA form 2D has been prepared for this outfall.

3.32 Outfalls 50-1-OPN-51, 50-1-OPN-53, 50-1-OPN-54, 50-1-OPN-55, 50-1-OPN-56 and 50-1-OPN-57

These outfalls receive storm water flows from roof drains and discharge to daylight. No changes or permits are recommended. No EPA forms were prepared.

3.33 Outfalls 50-1-OPN-58, 50-1-OPN-59, 50-1-OPN-60, 50-1-OPN-61, 50-1-OPN-62, 50-1-OPN-63, 50-1-OPN-64, 50-1-OPN-65, 50-1-OPN-66, 50-1-OPN-67 and 50-1-OPN-68

These outfalls are from storm drain downspouts and discharge to daylight. No changes or permits are recommended. No EPA forms were prepared.

4.0 RECOMMENDATIONS FOR BUILDING 50-2

Building 50-2 contains RLW holding tanks for untreated raw RLW and treated RLW waiting for discharge to the 051051 permitted outfall. Untreated waste is received from TAs 2, 3, 16, 21, 35, 43, 48, 50, 53, 55 and 59 either through direct piping or via truck. This waste is then pumped to the 50-1 waste processing plant for treatment. Once this waste has been treated it is then pumped to the 50-2 RLW final holding tanks for discharge. Currently, the RLW holding tanks in 50-2 are not in secondary containment. It is recommended that these tanks be provided

with secondary containment and this may already be in the planning stages. In the interim period it is recommended that soil testing be initiated to determine the integrity of these tanks. Table 3 is a list of drains to the outfalls for building 50-2 and Figure 5 is a schematic of the piping. The table lists the drains that connect to each outfall pipe and includes recommendations for changes to the drain piping. The discussion below gives the reasoning for the recommendations.

4.1 Outfall 50-2-OPN-1

This outfall is from RLW contained in the raw waste holding tank and discharges to the 50-1 waste processing plant. In addition to the waste in the holding tank this outfall also includes flows from floor drains (3) located in 50-2. Floor drain, 1FD2, receives inputs from an air compressor drain. It is recommended that the flow from this drain be containerized to prevent the introduction of oil into the waste treatment system. Floor drain, 1FD3, receives flows from storm water that weeps into 50-2. It is recommended that the source of this weepage be determined and stopped to prevent the unnecessary treatment of storm water. No permits are recommended. No EPA forms were prepared.

4.2 Outfall 50-2-OPN-2

This outfall is from treated RLW from the 50-2 final holding tank and discharges to the permitted 051051 outfall to Mortandad Canyon. Updated EPA 2C forms have been prepared and are included in Appendix 3.

5.0 RECOMMENDATIONS FOR BUILDING 50-4

Building 50-4 is a transformer. Table 4 is a list of drains to the outfalls for building 50-4 and Figure 6 is a schematic of the piping. The table lists the drains that connect to each

outfall pipe and includes recommendations for changes to the drain piping. Outfall 50-4-OPN-1 is an oil drain from the transformer. This oil contains polychlorinated biphenols (PCBs). It is recommended that a locking mechanism be placed on the drain valve and that secondary containment, appropriately sized to contain the volume of oil in the transformer, be provided for this outfall. Review and implementation of the Laboratory's current Spill Prevention Control and Countermeasures (SPCC) Plan, Revision 3, is recommended. No permits are recommended. No EPA forms were prepared.

6.0 RECOMMENDATIONS FOR BUILDING 50-5

Building 50-5 is a nitric acid tank. Table 5 is a list of drains to the outfalls for building 50-5 and Figure 7 is a schematic of the piping. The table lists the drains that connect to each outfall pipe and includes recommendations for changes to the drain piping. Outfalls 50-5-OPN-1 and 50-5-OPN-2 are from the nitric acid tank and discharge to daylight within a secondary containment structure. Review and implementation of the Laboratory's SPCC Plan is recommended. No permitting is recommended. No EPA forms were prepared.

7.0 RECOMMENDATIONS FOR BUILDING 50-37

Building 50-37 is the controlled air incinerator building. Table 6 is a list of drains to the outfalls for building 50-37 and Figures 8, 9 and 10 are schematics of the piping. The table lists the drains that connect to each outfall pipe and includes recommendations for changes to the drain piping. The discussion below gives the reasoning for the recommendations.

7.1 Outfall 50-37-OPN-1

This outfall is from sanitary facilities and flows into a sewer lift station which flows to the TA-50 sanitary sewer system.

The sanitary facilities that flow into this outfall include lavatories (2), a sink drain (1), toilets (2), a urinal (1) and water fountains (2). The sink should be labeled "SANITARY WASTE ONLY - NO CHEMICAL DISPOSAL". No permitting is recommended. No EPA forms were prepared.

7.2 Outfall 50-37-OPN-2

This outfall is from sanitary facilities and flows into a sewer manhole which flows to the TA-50 sanitary sewer system. The sanitary facilities that flow into this outfall include floor drains (10), lavatories (5), showers (2), a sink drain (1), toilets (5), urinals (3) and water fountains (2). Floor drains, 1FD2 and 1FD3, located in equipment room 111 could not be found. It is recommended that the user verify the existence of these drains and permanently plug them. Floor drain, 1FD1, located in equipment room 111 receives input from an air compressor drain, an air dryer and a distiller. It is recommended that the drain from the air compressor be containerized to prevent the introduction of oil into the sanitary sewer system. Floor drain, 1FD4, located in equipment room 111 receives input from an expansion tank drain, a hot water PRV, a boiler drain, a hot water drain, an air compressor drain and an air dryer. It is recommended that the drain from the air compressor be containerized. Floor drain, 1FD5, located in equipment room 111 receives input from a sprinkler drain, BFPs (2), a fire drain, and a cold water drain. Floor drain, 1FD6, located in equipment room 111 receives input from a boiler drain, a process cooling line drain, a boiler PRV and water heater PRVs (2). The sink should be labeled for sanitary waste only. No permits are recommended. No EPA forms were prepared.

7.3 Outfall 50-37-OPN-3

This outfall is from RLW facilities and discharges to the 50-1 waste processing plant via the TA-50 RLW collection system. The

facilities that flow to this outfall include an area drain (1), floor drains (22), an ice maker (1) and sink drains (7). Area drain, AD1, is located outside of the building. It is recommended that a roof be built over this drainage area and the drain be bermed to prevent the unnecessary treatment of storm water. No permits are recommended. No EPA forms were prepared.

7.4 Outfall 50-37-OPN-4

This outfall is from RLW facilities and discharges to the 50-1 waste processing plant via the TA-50 RLW collection system. The facilities that flow to this outfall are floor drains (5). No changes or permits are recommended. No EPA forms were prepared.

7.5 Outfalls 50-37-OPN-5, 50-37-OPN-6, 50-37-OPN-7, 50-37-OPN-8, 50-37-OPN-9, 50-37-OPN-10, 50-37-OPN-11, 50-37-OPN-12 and 50-37-OPN-13

These outfalls are fire system drains and discharge to daylight. They should be covered by an NOI. No EPA forms were prepared.

7.6 Outfall 50-37-OPN-14

This outfall is from a caustic tank vent and discharges to the atmosphere. No piping changes are recommended. No EPA forms were prepared.

7.7 Outfall 50-37-OPN-15

This outfall is from a caustic tank liquid fill line and discharges to the TA-50 RLW collection system via area drain, AD1. No EPA forms were prepared.

7.8 Outfalls 50-37-OPN-16 and 50-37-OPN-17

These outfalls are from non-potable water drains and discharge to the TA-50 RLW collection system via area drain, AD1. No changes or permits are recommended. No EPA forms were prepared.

7.9 Outfalls 50-37-OPN-18 and 50-37-OPN-19

These outfalls are from natural gas vents and discharge to the atmosphere. No changes or permits are recommended. No EPA forms were prepared.

7.10 Outfall 50-37-OPN-20

This outfall is from a stack drain and discharges storm water to daylight. It is recommended that this discharge be tested for radioactive contamination and, if found, the discharge should be containerized for treatment as RLW. No EPA forms were prepared.

7.11 Outfall 50-37-OPN-21

This outfall is a plumbing vent and discharges to the atmosphere. No changes or permits are recommended. No EPA forms were prepared.

7.12 Outfalls 50-37-OPN-22, 50-37-OPN-23, 50-37-OPN-24, 50-37-OPN-25, 50-37-OPN-26, 50-37-OPN-27, 50-37-OPN-28 and 50-37-OPN-29

These outfalls are from gas vents that discharge to the atmosphere. No changes or permits are recommended. No EPA forms were prepared.

7.13 Outfalls 50-37-OPN-30, 50-37-OPN-31, 50-37-OPN-32, 50-37-OPN-33, 50-37-OPN-34, 50-37-OPN-35, 50-37-OPN-36 and 50-37-OPN-37

These outfalls are storm water from roof drains and discharge to daylight. No changes or permits are recommended. No EPA forms were prepared.

7.14 Outfalls 50-37-OPN-38, 50-37-OPN-39, 50-37-OPN-40 and 50-37-OPN-41

These outfalls are storm water from roof downspouts and discharge to daylight. No changes or permits are recommended. No EPA forms were prepared.

8.0 RECOMMENDATIONS FOR BUILDING 50-42

Building 50-42 is a CO_2 tank. Table 7 is a list of drains to the outfalls for building 50-42 and Figure 11 is a schematic of the piping. The table lists the drains that connect to each outfall pipe and includes recommendations for changes to the drain piping. Outfalls 50-42-OPN-1, 50-42-OPN-2 and 50-42-OPN-3 are from the CO_2 tank and discharge to the atmosphere. No changes or permits are recommended. No EPA forms were prepared.

9.0 RECOMMENDATIONS FOR BUILDING 50-48

Building 50-48 is the cooling tower for 50-37. Table 8 is a list of drains to the outfalls for building 50-48 and Figure 12 is a schematic of the piping. The table lists the drains that connect to each outfall pipe and includes recommendations for changes to the drain piping. The discussion below gives the reasoning for the recommendations.

9.1 Outfall 50-48-OPN-1

This outfall is from the cooling tower sump overflow and discharges to the sanitary sewer system. Due to the configuration of the overflow piping, this outfall could not be dye tested and it is recommended that the user verify that this outfall does in fact flow to the sanitary sewer. Discharge flow is infrequent. No permits are recommended. No EPA forms were prepared.

9.2 Outfalls 50-48-OPN-2, 50-48-OPN-3, 50-48-OPN-4, 50-48-OPN-6, 50-48-OPN-7 and 50-48-OPN-8

These outfalls are from cooling tower drains and discharge to daylight. These drains do not normally flow and are used for maintenance only. These drains should be routed to the sanitary sewer along with the overflow. No EPA forms were prepared.

9.3 Outfall 50-48-OPN-5

This outfall is from a capped pipe to daylight. No EPA forms were prepared.

10.0 RECOMMENDATIONS FOR BUILDING 50-54

Building 50-54 is a machine shop. Table 9 is a list of drains to the outfalls for building 50-54 and Figure 13 is a schematic of the piping. The table lists the drains that connect to each outfall pipe and includes recommendations for changes to the drain piping. The discussion below gives the reasoning for the recommendations.

10.1 Outfall 50-54-OPN-1

This outfall is from sanitary facilities and flows into a sewer manhole station which flows to the TA-50 sanitary sewer system.

The sanitary facilities that flow into this outfall include floor drains (3), a lavatory (1), a sink drain (1), a toilet (1) and a water fountain. It is recommended that floor drains 1FD2 and 1FD3 be permanently plugged and sink drain 1SD1 be labeled "SANITARY WASTE ONLY - NO CHEMICAL DISPOSAL". No permitting is recommended. No EPA forms were prepared.

10.2 Outfall 50-54-OPN-2

This outfall is from sanitary facilities and flows into a sewer manhole which flows to the TA-50 sanitary sewer system. The sanitary facilities that flow into this outfall are a floor sink (1). This floor sink, 1FS1, receives input from a fire drain and an air compressor drain. It is recommended that the drain from the air compressor be containerized to prevent the introduction of oil into the sanitary sewer system. No changes or permits are recommended. No EPA forms were prepared.

10.3 Outfall 50-54-OPN-3

This outfall is from an unused equipment drain and discharges to daylight. It is recommended that this outfall be removed. No permits are recommended. No EPA forms were prepared.

10.4 Outfalls 50-54-OPN-4, 50-54-OPN-5, 50-54-OPN-6 and 50-54-OPN-7

These outfalls are storm water from roof drains and discharge to daylight. No changes or permits are recommended. No EPA forms were prepared.

10.5 Outfalls 50-54-OPN-8, 50-54-OPN-9, 50-54-OPN-10 and 50-54-OPN-11

These outfalls are from fire drains and discharge to daylight. They should be covered by an NOI. No EPA forms were prepared.

10.6 Outfalls 50-54-OPN-12 and 50-54-OPN-13

These outfalls are from natural gas vents and discharge to the atmosphere. No changes or permits are recommended. No EPA forms were prepared.

11.0 RECOMMENDATIONS FOR BUILDING 50-66

Building 50-66 is an acid and a caustic tank used for waste treatment processing in building 50-1. These tanks have no drains. They are in a secondary containment vault. No changes or permits are recommended. No EPA forms were prepared.

12.0 RECOMMENDATIONS FOR BUILDING 50-69

Building 50-69 is the Size Reduction Facility. It is primarily used to cut up radioactively contaminated glove boxes. Table 10 is a list of drains to the outfalls for building 50-69 and Figure 14 is a schematic of the piping. The table lists the drains that connect to each outfall pipe and includes recommendations for changes to the drain piping. The discussion below gives the reasoning for the recommendations.

12.1 Outfall 50-69-OPN-1

This outfall is from sanitary facilities and flows into a sewer manhole station which flows to the TA-50 sanitary sewer system. The sanitary facilities that flow into this outfall include a toilet (1) and a urinal (1). No changes or permits are recommended. No EPA forms were prepared.

12.2 Outfall 50-69-OPN-2

This outfall is from RLW facilities and discharges to the 50-1 waste processing plant via the TA-50 RLW collection system. The facilities that flow to this outfall include floor drains (3), a

floor sink (1), a lavatory (1) and a shower (1). No changes or permits are recommended. No EPA forms were prepared.

12.3 Outfall 50-69-OPN-3

This outfall is from RLW washings from the cutting enclosure and discharges to a radioactive liquid storage tank outside the building. The washings from the cutting enclosure are vacuumed into a storage tank inside the building. This waste is then pumped to the storage tank outside the building. The piping between the building and the outside storage tank appears to be a single walled pipe. It is recommended that this piping be replaced with double walled pipe. No permits are recommended. No EPA forms were prepared.

12.4 Outfalls 50-69-OPN-4, 50-69-OPN-5, 50-69-OPN-6 and 50-69-OPN-7

These outfalls are from fire system drains and discharge to daylight. They should be covered by an NOI. No EPA forms were prepared.

12.5 Outfalls 50-69-OPN-8, 50-69-OPN-9, 50-69-OPN-10, 50-69-OPN-11, 50-69-OPN-12 and 50-69-OPN-13

These outfalls are storm water from roof drains and discharge to daylight. No changes or permits are recommended. No EPA forms were prepared.

12.6 Outfalls 50-69-OPN-14, 50-69-OPN-15, 50-69-OPN-16 and 50-69-OPN-17

These outfalls are storm water from roof canales and discharge to daylight. No changes or permits are recommended. No EPA forms were prepared.

12.7 Outfalls 50-69-OPN-18 and 50-69-OPN-19

These outfalls are from a breathing air vent and breathing air PRV and discharge to the atmosphere. No changes or permits are recommended. No EPA forms were prepared.

12.8 Outfalls 50-69-OPN-20 and 50-69-OPN-21

These outfalls are from capped stubs with no discharge. No changes or permits are recommended. No EPA forms were prepared.

12.9 Outfall 50-69-OPN-22

This outfall is from a stack drain and discharges storm water to daylight. It is recommended that this discharge be tested for radioactivity and, if found, the discharge should be containerized. No EPA forms were prepared.

12.10 Outfall 50-69-OPN-23

This outfall is from a water heater PRV and discharges to daylight. It should be covered by an NOI. No EPA forms were prepared.

12.11 Outfall 50-69-OPN-24

This outfall is a secondary containment drain for the RLW storage tank located outside 50-69 and discharges to daylight. It is recommended that the valve on this drain be fitted with a locking mechanism to prevent inadvertent operation of the valve. In addition, the secondary containment berm did not appear to be water tight or of sufficient capacity to contain the volume of the storage tank. If this tank is to remain in service it is recommended that secondary containment, appropriately sized to contain the volume of the storage tank, be provided. Review and

implementation of the Laboratory's SPCC Plan is recommended. No permits are recommended. No EPA forms were prepared.

12.12 Outfall 50-69-OPN-25

This outfall is from a vent on the radioactive liquid storage tank located outside 50-69 and discharges to the atmosphere. No changes or permits are recommended. No EPA forms were prepared.

12.13 Outfall 50-69-OPN-26

This outfall is from an unknown source and discharges to daylight. During field observations it could not be determined where this outfall originated. No flow was observed nor did it appear that this outfall is used. It is recommended that the user determine the source of this outfall and that it be removed. No EPA forms were prepared.

13.0 RECOMMENDATIONS FOR BUILDING 50-83

Building 50-83 is a machine shop/storage facility. Table 11 is a list of drains to the outfalls for building 50-83 and Figure 15 is a schematic of the piping. The table lists the drains that connect to each outfall pipe and includes recommendations for changes to the drain piping. The discussion below gives the reasoning for the recommendations.

13.1 Outfall 50-83-OPN-1

This outfall is from an unused conduit stub out and there is no flow. No changes or permits are recommended. No EPA forms were prepared.

13.2 Outfall 50-83-OPN-2

This outfall is from non-potable water and discharges to 50-185, the decontamination trailer, not to daylight. No changes or permits are recommended. No EPA forms were prepared.

14.0 RECOMMENDATIONS FOR BUILDING 50-84

Building 50-84 is an office trailer. Table 12 is a list of the drains to the outfalls for building 50-84 and Figure 11 is a schematic of the piping. The table lists the drains that connect to each outfall pipe and includes recommendations for changes to the drain piping. The discussion below gives the reasoning for the recommendations.

14.1 Outfall 50-84-OPN-1

This outfall is from sanitary facilities and flows into a sewer manhole which drains to the TA-50 sanitary sewer system. Sanitary facilities that flow to this outfall include lavatories (2), sink drains (2) and toilets (2). Sinks should be labeled "SANITARY WASTE ONLY - NO CHEMICAL DISPOSAL". No changes or permits are recommended. No EPA forms were prepared.

14.2 Outfall 50-84-OPN-2

This outfall is a drain from an evaporative cooler and discharges to daylight. It should be covered by an NOI. No EPA forms were prepared.

14.3 Outfall 50-84-OPN-3

This outfall is from a storm water downspout and discharges to daylight. No changes or permits are recommended. No EPA forms were prepared.

14.4 Outfall 50-84-OPN-4

This outfall is from a water heater PRV and discharges to daylight. It should be covered by an NOI. No EPA forms were prepared.

15.0 RECOMMENDATIONS FOR BUILDING 50-90

Building 50-90 is a RLW storage tank used to augment the storage capacity of 50-2. Table 13 is a list of the drains to the outfalls for building 50-90 and Figure 17 is a schematic of the piping. The table lists the drains that connect to each outfall pipe and includes recommendations for changes to the drain piping. The discussion below gives the reasoning for the recommendations.

15.1 Outfalls 50-90-OPN-1 and 50-90-OPN-2

These outfalls are RLW storage tank drains and discharge to daylight within a secondary containment berm. Review and implementation of the Laboratory's SPCC Plan is recommended. No permitting is recommended. No EPA forms were prepared.

15.2 Outfalls 50-90-OPN-3 and 50-90-OPN-4

These outfalls are RLW lines from the storage tank and discharge to 50-2. No changes or permits are recommended. No EPA forms were prepared.

16.0 RECOMMENDATIONS FOR BUILDING 50-94

This building is an office trailer and has no drains. During field inspection this trailer was being prepared for relocation to make room for the planned expansion of 50-54. No changes or permits are recommended. No EPA forms were prepared.

17.0 RECOMMENDATIONS FOR BUILDING 50-105

Building 50-105 is a storage shed. It is used to store pipe fittings, pumps, plastic containers, spill pillows and plastic tubing. There are no drains. No changes or permits are recommended. No EPA forms were prepared.

18.0 RECOMMENDATIONS FOR BUILDING 50-106

Building 50-106 is a storage shed. It houses a sampling station for the RLW collection system. There are no drains. No changes or permits are recommended. No EPA forms were prepared.

19.0 RECOMMENDATIONS FOR BUILDING 50-107

Building 50-107 is a sampling station. Table 14 is a list of the drains to the outfalls for building 50-107 and Figure 17 is a schematic of the piping. The table lists the drains that connect to each outfall pipe and includes recommendations for changes to the drain piping. Outfall 50-107-OPN-1 is from a stack drain and discharges storm water to daylight. It is recommended that this discharge be tested for radioactivity and, if found, the discharge should be containerized for treatment as RLW. No EPA forms were prepared.

20.0 RECOMMENDATIONS FOR BUILDING 50-114

Building 50-114 is a hazardous materials containment building. It has no drains. No changes or permits are recommended. No EPA forms were prepared.

21.0 RECOMMENDATIONS FOR BUILDING 50-117

Building 50-117 is a transportainer and is used for storage. It has no drains. No changes or permits are recommended. No EPA forms were prepared.

22.0 RECOMMENDATIONS FOR BUILDING 50-118

Building 50-118 is a transportainer and is used for storage. It has no drains. No changes or permits are recommended. No EPA forms were prepared.

23.0 RECOMMENDATIONS FOR BUILDING 50-119

Building 50-119 is a storage shed. It is used to store pumps and hoses used for the transfer of RLW. It has no drains. No changes or permits are recommended. No EPA forms were prepared.

24.0 RECOMMENDATIONS FOR BUILDING 50-125

Building 50-125 is a storage shed. It has no drains. No changes or permits are recommended. No EPA forms were prepared.

25.0 RECOMMENDATIONS FOR BUILDING 50-135

Building 50-135 is a storage shed. It has no drains. No changes or permits are recommended. No EPA forms were prepared.

26.0 RECOMMENDATIONS FOR BUILDING 50-148

Building 50-148 is a hazardous materials containment building. It has no drains. No changes or permits are recommended. No EPA forms were prepared.

27.0 RECOMMENDATIONS FOR BUILDING 50-160

Building 50-160 is a storage shed. It is used to store office equipment. It has no drains. No changes or permits are recommended. No EPA forms were prepared.

28.0 RECOMMENDATIONS FOR BUILDING 50-183

Building 50-183 is a fuel tank for a diesel generator. Table 15 is a list of the drains to the outfalls for building 50-183 and Figure 19 is a schematic of the piping. The table lists the drains that connect to each outfall pipe and includes recommendations for changes to the drain piping. The discussion below gives the reasoning for the recommendations.

28.1 Outfall 50-183-OPN-1

This outfall is a drain from the fuel tank and discharges to a secondary containment vault. Review and implementation of the Laboratory's SPCC Plan is recommended. No changes or permits are recommended. No EPA forms were prepared.

28.2 Outfall 50-183-OPN-2

This outfall is fuel from the fuel tank and discharges to the fuel tank on the diesel. No changes or permits are recommended. No EPA forms were prepared.

28.3 Outfall 50-183-OPN-3

This outfall is the fuel overflow from the tank on the diesel and discharges back to the fuel storage tank. No changes or permits are recommended. No EPA forms were prepared.

28.4 Outfall 50-183-OPN-4

This outfall is from the fuel storage tank vent and discharges to the atmosphere. No changes or permits are recommended. No EPA forms were prepared.

28.5 Outfall 50-183-OPN-5

This outfall is from the containment vault vent and discharges to the atmosphere. No changes or permits are recommended. No EPA forms were prepared.

29.0 RECOMMENDATIONS FOR BUILDING 50-184

Building 50-184 is to house a telephone switchgear and was still under construction at the time of field observations. It has no drains at this time. No changes or permits are recommended. No EPA forms were prepared.

30.0 RECOMMENDATIONS FOR BUILDING 50-185

Building 50-185 is a decontamination trailer that is used for the decontamination of lead bricks. Table 16 is a list of the drains to the outfalls for building 50-185 and Figure 20 is a schematic of the piping. The table lists the drains that connect to each outfall pipe and includes recommendations for changes to the drain piping. The discussion below gives the reasoning for the recommendations.

30.1 Outfall 50-185-OPN-1

This outfall is non-potable water from 50-83 and is used in the decontamination of lead bricks. This water is collected in a storage tank and taken to 50-1 for treatment. No changes or permits are recommended. No EPA forms were prepared.

30.2 Outfall 50-185-OPN-2

This outfall is from a tertiary containment tank drain and discharges to daylight. It is recommended that this drain be labeled and a locking mechanism be provided for the valve. Review and implementation of the Laboratory's SPCC Plan is also

recommended. No permits are recommended. No EPA forms were prepared.

30.3 Outfall 50-185-OPN-3

This outfall is a drain from an evaporative cooler and discharges to daylight. It should be covered by an NOI. No EPA forms were prepared.

30.4 Outfalls 50-185-OPN-4 and 50-185-OPN-5

These outfalls are from breathing air vents and discharge to the atmosphere. No changes or permits are recommended. No EPA forms were prepared.

31.0 RECOMMENDATIONS FOR BUILDING 50-191

Building 50-191 is a diesel generator. Table 17 is a list of the drains to the outfalls for building 50-191 and Figure 21 is a schematic of the piping. The table lists the drains that connect to each outfall pipe and includes recommendations for changes to the drain piping. The discussion below gives the reasoning for the recommendations.

31.1 Outfall 50-191-OPN-1

This outfall is the vapor exhaust from the diesel and discharges to the atmosphere. No changes or permits are recommended. No EPA forms were prepared.

31.2 Outfall 50-191-OPN-2

This outfall is from a capped stub out and there is no flow. No changes or permits are recommended. No EPA forms were prepared.

31.3 Outfall 50-191-OPN-3

This outfall is from the oil drain from the diesel and discharges to daylight. It is recommended that the valve for this drain be provided with a locking mechanism. Review and implementation of the Laboratory's SPCC Plan is also recommended. No permits are recommended. No EPA forms were prepared.

32.0 CONCLUSION

This document provides the information to characterize buildings 50-1, 50-2, 50-4, 50-5, 50-37, 50-38, 50-42, 50-48, 50-54, 50-69, 50-83, 50-84, 50-90, 50-94, 50-105, 50-106, 50-107, 50-114, 50-117, 50-118, 50-119, 50-125, 50-135, 50-148, 50-160, 50-183, 50-184, 50-185, 50-189 and 50-191. NPDES permit application forms have been completed for the following outfalls.

Forms 2C:

50-2-OPN-2 (051051)

Forms 2D:

50-1-OPN-52

Other outlet pipes are as follows:

Discharges to the SWSC Collection System:

1.	50-1-OPN-1	2.	50-1-OPN-2	3.	50-1-OPN-3
4.	50-37-OPN-1	5.	50-37-OPN-2	6.	50-48-OPN-1
7.	50-54-OPN-1	8.	50-54-OPN-2	9.	50-69-OPN-1
10.	50-84-OPN-1				

Discharge from vapor and gas vents:

1.	50-1-OPN-16	2.	50-1-OPN-17	3.	50-1-OPN-18
4.	50-1-OPN-19	5.	50-1-OPN-20	6.	50-1-OPN-21
7.	50-1-OPN-22	8.	50-1-OPN-36	9.	50-1-OPN-41
10.	50-1-OPN-41	11.	50-1-OPN-46	12.	50-1-OPN-47
13.	50-1-OPN-48	14.	50-1-OPN-49	15.	50-1-OPN-50
16.	50-37-OPN-18	17.	50-37-OPN-19	18.	50-37-OPN-20
19.	50-37-OPN-21	20.	50-37-OPN-22	21.	50-37-OPN-23

22. 50-37-OPN-24	23. 50-37-OPN-25	24. 50-37-OPN-26
25. 50-37-OPN-27	26. 50-37-OPN-28	27. 50-37-OPN-29
28. 50-42-OPN-1	29. 50-42-OPN-2	30. 50-42-OPN-3
31. 50-54-OPN-12	32. 50-54-OPN-13	33. 50-69-OPN-18
34. 50-69-OPN-19	35. 50-69-OPN-25	36. 50-183-OPN-4
37. 50-183-OPN-5	38. 50-185-OPN-4	39. 50-185-OPN-5
40. 50-191-OPN-1		

Discharges from hot water pressure relief valves:

1. 50-1-OPN-29	2. 50-1-OPN-30	3. 50-69-OPN-23
4. 50-84-OPN-4		

Discharges of untreated water and condensate drains:

1. 50-1-OPN-31	2. 50-1-OPN-32	3. 50-84-OPN-2
4. 50-185-OPN-3		

Discharges of storm water:

1. 50-1-OPN-51	2. 50-1-OPN-52	3. 50-1-OPN-53
4. 50-1-OPN-54	5. 50-1-OPN-55	6. 50-1-OPN-56
7. 50-1-OPN-57	8. 50-1-OPN-58	9. 50-1-OPN-59
10. 50-1-OPN-60	11. 50-1-OPN-61	12. 50-1-OPN-62
13. 50-1-OPN-63	14. 50-1-OPN-64	15. 50-1-OPN-65
16. 50-1-OPN-66	17. 50-1-OPN-67	18. 50-1-OPN-68
19. 50-37-OPN-30	20. 50-37-OPN-31	21. 50-37-OPN-32
22. 50-37-OPN-33	23. 50-37-OPN-34	24. 50-37-OPN-35
25. 50-37-OPN-36	26. 50-37-OPN-37	27. 50-37-OPN-38
28. 50-37-OPN-39	29. 50-37-OPN-40	30. 50-37-OPN-41
31. 50-54-OPN-4	32. 50-54-OPN-5	33. 50-54-OPN-6
34. 50-54-OPN-7	35. 50-69-OPN-8	36. 50-69-OPN-9
37. 50-69-OPN-10	38. 50-69-OPN-11	39. 50-69-OPN-12
40. 50-69-OPN-13	41. 50-69-OPN-14	42. 50-69-OPN-15
43. 50-69-OPN-16	44. 50-69-OPN-17	45. 50-84-OPN-3

Discharges to daylight from floor drains:

1. 50-1-OPN-52

Discharges from fire water systems:

1.	50-1-OPN-23	2.	50-1-OPN-24	3.	50-1-OPN-25
4.	50-1-OPN-26	5.	50-1-OPN-27	6.	50-1-OPN-28
7.	50-37-OPN-5	8.	50-37-OPN-6	9.	50-37-OPN-7
10.	50-37-OPN-8	11.	50-37-OPN-9	12.	50-37-OPN-10
13.	50-37-OPN-11	14.	50-37-OPN-12	15.	50-37-OPN-13
16.	50-54-OPN-4	17.	50-54-OPN-5	18.	50-54-OPN-6
19.	50-54-OPN-7	20.	50-69-OPN-4	21.	50-69-OPN-5
22.	50-69-OPN-6	23.	50-69-OPN-7		

Discharges to the radioactive liquid waste collection system:

1.	50-1-OPN-4	2.	50-1-OPN-5	3.	50-1-OPN-6
4.	50-1-OPN-7	5.	50-1-OPN-8	6.	50-1-OPN-9
7.	50-1-OPN-10	8.	50-1-OPN-11	9.	50-1-OPN-12
10.	50-1-OPN-13	11.	50-1-OPN-14	12.	50-1-OPN-15
13.	50-37-OPN-3	14.	50-37-OPN-4	15.	50-69-OPN-2
16.	50-90-OPN-3	17.	50-90-OPN-4		

Discharges from stack drains:

1.	50-1-OPN-33	2.	50-1-OPN-34	3.	50-1-OPN-35
4.	50-37-OPN-20	5.	50-69-OPN-22	6.	50-107-OPN-1

Recommended permitting and corrective action items are outlined in Tables 2 through 17 as well as in the above text. Corrective actions should be performed as soon as practicable to minimize the chance of unpermitted discharge of pollutants.

TABLE 1

SUMMARY OF ABBREVIATIONS

ABBREVIATION	MEANING
A/C	AIR CONDITIONING
AD	AREA DRAIN
BFP	BACK FLOW PREVENTER
EC	EVAPORATIVE COOLER
FD	FLOOR DRAIN
FS	FLOOR SINK
IM	ICE MAKER
LV	LAVATORY
MH	MANHOLE
PRV	PRESSURE RELIEF VALVE
RLW	RADIOACTIVE LIQUID WASTE
RD	ROOF DRAIN
SD	SINK DRAIN
SH	SHOWER
SP	SUMP PUMP
SS	SANITARY SEWER
TL	TOILET
UR	URINAL
WF	WATER FOUNTAIN
WH	WATER HEATER

TABLE 2: TA 50-1 DRAIN SUMMARY

OUTFALL NUMBER	ID NUMBER	ROOM ACTIVITY	ROOM NUMBER	STATUS OR RECOMMENDATIONS	EPA FORM PREPARED
50-001-OPN-01 SANITARY	BFD01	RESTROOM	7B	NO CHANGE	NO
	BFD02	RESTROOM	7A	NO CHANGE	
	BLV1	RESTROOM	7B	NO CHANGE	
	BLV2	RESTROOM	7A	NO CHANGE	
	BTL1	RESTROOM	7B	NO CHANGE	
	BTL2	RESTROOM	7A	NO CHANGE	
	BUR1	RESTROOM	7B	NO CHANGE	
50-001-OPN-02 SANITARY	1ED1	CHEMISTRY LAB	124	LABEL	NO
	1ED2	CHEMISTRY LAB	124	LABEL	
	1LV1	RESTROOM	110	NO CHANGE	
	1LV2	RESTROOM	110	NO CHANGE	
	1LV3	RESTROOM	111	NO CHANGE	
	1SD01	JANITORS CLOSET	N/A	LABEL	
	1SD04	LUNCH ROOM	115	LABEL	
	1SD05	LUNCH ROOM	115	LABEL	
	1SH1	RESTROOM	110	NO CHANGE	
	1SH2	RESTROOM	110	NO CHANGE	
	1SH3	RESTROOM	111	NO CHANGE	
	1TL1	RESTROOM	110	NO CHANGE	
	1TL2	RESTROOM	110	NO CHANGE	
	1TL3	RESTROOM	111	NO CHANGE	
	1UR1	RESTROOM	110	NO CHANGE	
	1UR2	RESTROOM	110	NO CHANGE	
	1WF1	CORRIDOR	N/A	NO CHANGE	
	BED2	EQUIPMENT ROOM	14	OIL WATER /SEPARATOR	
	BFD03	EQUIPMENT ROOM	14	NO CHANGE	
	BFD04	EQUIPMENT ROOM	14	NO CHANGE	
	BFD05	FILTER ROOM	N/A	VERIFYPLUG	
	BFD06	EQUIPMENT ROOM	14	NO CHANGE	
	BFD07	EQUIPMENT ROOM	14	NO CHANGE	
	BFD08	FILTER ROOM	N/A	VERIFY/PLUG	
	BFD27	EQUIPMENT ROOM	30	CONTAINERIZE	
	BLV3	RESTROOM	31	NO CHANGE	
	BLV4	RESTROOM	33	NO CHANGE	
	BLV5	RESTROOM	33	NO CHANGE	
	BSH1	RESTROOM	31	NO CHANGE	
	BSH2	RESTROOM	31	NO CHANGE	
	BSH3	RESTROOM	33	NO CHANGE	

TABLE 2: TA 50-1 DRAIN SUMMARY

OUTFALL NUMBER	ID NUMBER	ROOM ACTIVITY	ROOM NUMBER	STATUS OR RECOMMENDATIONS	EPA FORM PREPARED
50-001-OPN-02 SANITARY CONT.	BTL3	RESTROOM	31	NO CHANGE	NO
	BTL4	RESTROOM	33	NO CHANGE	
	BUR2	RESTROOM	31	NO CHANGE	
	BWF2	CORRIDOR	N/A	NO CHANGE	
	N/A	BACK FLOW PREVENTERS (2)	N/A	NO CHANGE	
50-001-OPN-03 SANITARY	BSD26	LUNCH ROOM	46	LABEL	NO
	BWF3	LUNCH ROOM	46	NO CHANGE	
50-001-OPN-04 RLW	1FD01	RESTROOM	110	PIPE TO S.S.	NO
	1FD02	RESTROOM	111	PIPE TO S.S.	
	1SD02	OFFICE	114	REMOVED	
	1SD03	OFFICE	113	REMOVED	
	BSD12	CHEM LAB	1	NO CHANGE	
50-001-OPN-05 RLW	BCD08	DECONTAMINATION	49	NO CHANGE	NO
	BCD09	COUNT LAB	48	NO CHANGE	
	BCD10	COUNT LAB	48	NO CHANGE	
	BCD11	RESPIRATOR LAUNDRY	41	NO CHANGE	
	BDW3	RESPIRATOR LAUNDRY	41	NO CHANGE	
	BFD38	DECONTAMINATION	49	NO CHANGE	
	BFD39	DECONTAMINATION	49	NO CHANGE	
	BFD40	DECONTAMINATION	49	NO CHANGE	
	BFD41	CORRIDOR		NO CHANGE	
	BFD42	RESPIRATOR LAUNDRY	41	NO CHANGE	
	BFD43	RESPIRATOR LAUNDRY	41	NO CHANGE	
	BSD23	RESPIRATOR LAUNDRY	41	NO CHANGE	
	BSD24	DECONTAMINATION	49	NO CHANGE	
	BSD25	COUNT LAB	48	NO CHANGE	
	BSD27	RESPIRATOR LAUNDRY	41	NO CHANGE	
	N/A	BACK FLOW PREVENTERS (2)	41	NO CHANGE	
50-001-OPN-06 RLW	BFD36	MORGUE	36	NO CHANGE	NO
50-001-OPN-07 RLW	BED3	MORGUE	36	NO CHANGE	NO
50-001-OPN-08 RLW	BFD34	MORGUE	36	NO CHANGE	NO
50-001-OPN-09 RLW	BAD1	EXTERNAL	EXT.	MODIFY	NO
	BFD37	STORAGE	38	NO CHANGE	
	BSD22	COUNT ROOM	38A	NO CHANGE	
50-001-OPN-10 RLW	BCD07	HEAVY EQUIPMENT DECON	34B	NO CHANGE	NO
	BFD35	MORGUE	36	NO CHANGE	
	BSD21	HEAVY EQUIPMENT DECON	34B	NO CHANGE	

TABLE 2: TA 50-1 DRAIN SUMMARY

OUTFALL NUMBER	ID NUMBER	ROOM ACTIVITY	ROOM NUMBER	STATUS OR RECOMMENDATIONS	EPA FORM PREPARED
50-001-OPN-11 RLW	BFD31	HEAVY EQUIPMENT DECON	34B	NO CHANGE	NO
50-001-OPN-12 RLW	1CD01	PROCESS PLANT	116	NO CHANGE	NO
	1CD02	RAD. CHEMISTRY LAB	130	NO CHANGE	
	1CD03	RAD. CHEMISTRY LAB	130	NO CHANGE	
	1CD04	RAD. CHEMISTRY LAB	130	NO CHANGE	
	1CD05	RAD. CHEMISTRY LAB	130	NO CHANGE	
	1CD06	RAD. CHEMISTRY LAB	130	NO CHANGE	
	1CD07	RAD. CHEMISTRY LAB	130	NO CHANGE	
	1CD08	RAD. CHEMISTRY LAB	130	NO CHANGE	
	1CD09	RAD. CHEMISTRY LAB	130	NO CHANGE	
	1CD10	RAD. CHEMISTRY LAB	131	NO CHANGE	
	1CD11	RAD. CHEMISTRY LAB	131	NO CHANGE	
	1CD12	RAD. CHEMISTRY LAB	131	NO CHANGE	
	1CD13	RAD. CHEMISTRY LAB	131	NO CHANGE	
	1CD14	RAD. CHEMISTRY LAB	131	NO CHANGE	
	1CD15	RAD. CHEMISTRY LAB	131	NO CHANGE	
	1CD16	RAD. CHEMISTRY LAB	131	NO CHANGE	
	1CD17	RAD. CHEMISTRY LAB	131	NO CHANGE	
	1DW1	CHEMISTRY LAB	124	NO CHANGE	
	1DW2	RAD. CHEMISTRY LAB	130	NO CHANGE	
	1DW3	RAD. CHEMISTRY LAB	131	NO CHANGE	
	1ED3	CHEMISTY LAB	123	NO CHANGE	
	1ED4	RAD. CHEMISTRY LAB	130	NO CHANGE	
	1ED5	RAD. CHEMISTRY LAB	131	NO CHANGE	
	1FD12	OFFICE	123A	PLUGGED	
	1FD13	OFFICE	123A	PLUGGED	
	1SD06	PROCESS PLANT	116	NO CHANGE	
	1SD07	CHEMISTY LAB	123	NO CHANGE	
	1SD08	CHEMISTY LAB	123	NO CHANGE	
	1SD09	OFFICE	123A	ELIMINATE	
	1SD10	OFFICE	123A	ELIMINATE	
	1SD11	CHEMISTRY LAB	124	NO CHANGE	
	1SD12	RAD. CHEMISTRY LAB	130	NO CHANGE	
	1SD13	RAD. CHEMISTRY LAB	130	NO CHANGE	
	1SD14	RAD. CHEMISTRY LAB	130	NO CHANGE	
	1SD15	RAD. CHEMISTRY LAB	131	NO CHANGE	
	1SD16	RAD. CHEMISTRY LAB	131	NO CHANGE	
	1SD17	RAD. CHEMISTRY LAB	131	NO CHANGE	
	1WF2	CORRIDOR		NO CHANGE	
	BCD01	CHEMISTRY LAB	10	NO CHANGE	

TABLE 2: TA 50-1 DRAIN SUMMARY

OUTFALL NUMBER	ID NUMBER	ROOM ACTIVITY	ROOM NUMBER	STATUS OR RECOMMENDATIONS	EPA FORM PREPARED
50-001-OPN-12 RLW CONT.	BCD02	CHEMISTRY LAB	10	NO CHANGE	NO
	BCD03	CHEMISTRY LAB	10	NO CHANGE	
	BCD04	HAZARDOUS WASTE PLANT	24	NO CHANGE	
	BCD05	HAZARDOUS WASTE PLANT	24	NO CHANGE	
	BCD06	CHEMISTRY LAB	34	NO CHANGE	
	BCD12	CHEMISTRY LAB	34	NO CHANGE	
	BDW1	CHEMISTRY LAB	10	NO CHANGE	
	BDW2	DECONTAMINATION LAB	35	NO CHANGE	
	BED1	CHEMISTRY LAB	10	NO CHANGE	
	BFD10	PROCESS PLANT	16	PLUGGED	
	BFD28	HAZARDOUS WASTE PLANT	24	NO CHANGE	
	BFD29	HAZARDOUS WASTE PLANT	24	MODIFY	
	BFD30	OFFICE	25	PLUGGED	
	BFD32	DECONTAMINATION LAB	35	PLUGGED	
	BFD33	DECONTAMINATION LAB	35	PLUGGED	
	BSD01	JANITORS CLOSET	7JC	PIPE TO S.S./LABEL	
	BSD02	INSTRUMENT LAB	5	NO CHANGE	
	BSD03	ELECTRONICS LAB	3	REMOVED	
	BSD04	ELECTRONICS LAB	3	REMOVED	
	BSD05	CHEMISTRY LAB	10	NO CHANGE	
	BSD06	CHEMISTRY LAB	10	NO CHANGE	
	BSD07	CHEMISTRY LAB	10	NO CHANGE	
	BSD08	CHEMISTRY LAB	10	NO CHANGE	
	BSD09	CHEM LAB	1	NO CHANGE	
	BSD10	CHEM LAB	1	NO CHANGE	
	BSD11	CHEM LAB	1	NO CHANGE	
	BSD13	CORRIDOR		NO CHANGE	
	BSD14	HAZARDOUS WASTE PLANT	24	NO CHANGE	
	BSD15	CHEMISTRY LAB	34	NO CHANGE	
	BSD16	CHEMISTRY LAB	34	NO CHANGE	
	BSD17	DECONTAMINATION LAB	35	NO CHANGE	
	BSD18	DECONTAMINATION LAB	35	NO CHANGE	
	BSD19	DECONTAMINATION LAB	35	NO CHANGE	
	BSD20	DECONTAMINATION LAB	35	NO CHANGE	
	BWF1	CORRIDOR	7	PIPE TO S.S.	
50-001-OPN-13 RLW	1FD03	PROCESS PLANT	116	NO CHANGE	NO
	1FD04	PROCESS PLANT	116	NO CHANGE	
	1FD05	PROCESS PLANT	116	NO CHANGE	
	1FD06	OFFICE	116A	PLUGGED	
	1FD07	PROCESS PLANT	116	PLUGGED	

TABLE 2: TA 50-1 DRAIN SUMMARY

OUTFALL NUMBER	ID NUMBER	ROOM ACTIVITY	ROOM NUMBER	STATUS OR RECOMMENDATIONS	EPA FORM PREPARED
50-001-OPN-13 RLW CONT.	1FD08	VACUUM FILTER ROOM	116B	NO CHANGE	NO
	1FD09	VACUUM FILTER ROOM	116B	NO CHANGE	
	1FD10	VACUUM FILTER ROOM	116B	NO CHANGE	
	1FD11	VACUUM FILTER ROOM	116B	NO CHANGE	
	BAD2	CONTAINMENT BERM	EXT.	MODIFY	
	BFD11	PROCESS PLANT	16	NO CHANGE	
	BFD12	PROCESS PLANT	16	CONTAINERIZE	
	BFD13	PROCESS PLANT	16	NO CHANGE	
	BFD14	PROCESS PLANT	16	NO CHANGE	
	BFD15	PROCESS PLANT	16	NO CHANGE	
	BFD16	PROCESS PLANT	16	NO CHANGE	
	BFD17	PROCESS PLANT	63	NO CHANGE	
	BFD18	POLISHING TREATMENT	61	NO CHANGE	
	BFD19	POLISHING TREATMENT	61	PLUGGED	
	BFD20	POLISHING TREATMENT	61	NO CHANGE	
	BFD21	PRE-TREATMENT	60A	NO CHANGE	
	BFD22	PRE-TREATMENT	60A	NO CHANGE	
	BFD23	PRE-TREATMENT	60	NO CHANGE	
	BSP2	PRE-TREATMENT	60	NO CHANGE	
50-001-OPN-14 RLW	N/A	RAD WASTE LINE	16	NO CHANGE	NO
50-001-OPN-15 RLW	BFD24	FEED TANK	70	NO CHANGE	NO
	BFD25	FEED TANK	70A	NO CHANGE	
	BFD26	FILTER ROOM	72A	NO CHANGE	
	BSP1	FEED TANK	70A	NO CHANGE	
50-001-OPN-16	N/A	NATURAL GAS VENT	72	NO CHANGE	NO
50-001-OPN-17	N/A	NATURAL GAS VENT	72	NO CHANGE	NO
50-001-OPN-18	N/A	NATURAL GAS VENT	72A	NO CHANGE	NO
50-001-OPN-19	N/A	NATURAL GAS VENT	10	NO CHANGE	NO
50-001-OPN-20	N/A	NATURAL GAS VENT	10	NO CHANGE	NO
50-001-OPN-21	N/A	NATURAL GAS VENT	57	NO CHANGE	NO
50-001-OPN-22	N/A	NATURAL GAS VENT	57	NO CHANGE	NO
50-001-OPN-23	N/A	FIRE SYSTEM DRAIN	57	NOI	NO
50-001-OPN-24	N/A	FIRE SYSTEM DRAIN	59	NOI	NO
50-001-OPN-25	N/A	FIRE SYSTEM DRAIN	63	NOI	NO
50-001-OPN-26	N/A	FIRE SYSTEM DRAIN	63	NOI	NO
50-001-OPN-27	N/A	FIRE SYSTEM DRAIN	63	NOI	NO
50-001-OPN-28	N/A	FIRE SYSTEM DRAIN	131	NOI	NO
50-001-OPN-29	N/A	WATER HEATER PRV	7A	NOI	NO
50-001-OPN-30	N/A	WATER HEATER PRV	7B	NOI	NO
50-001-OPN-31	N/A	CHILLED WATER		NOI	NO

TABLE 2: TA 50-1 DRAIN SUMMARY

OUTFALL NUMBER	ID NUMBER	ROOM ACTIVITY	ROOM NUMBER	STATUS OR RECOMMENDATIONS	EPA FORM PREPARED
50-001-OPN-32	N/A	CHILLED WATER		NOI	NO
50-001-OPN-33	N/A	STACK DRAIN	EXT.	TEST/CONTAIN	NO
50-001-OPN-34	N/A	STACK DRAIN	EXT.	TEST/CONTAIN	NO
50-001-OPN-35	N/A	STACK DRAIN	EXT.	TEST/CONTAIN	NO
50-001-OPN-36	N/A	COMPRESSED AIR CONNECTION	16	NO CHANGE	NO
50-001-OPN-37	N/A	NON-POTABLE WATER DRAIN	16	NO CHANGE	NO
50-001-OPN-38	N/A	NON-POTABLE WATER DRAIN	16	NO CHANGE	NO
50-001-OPN-39	N/A	CAUSTIC TANK FILL LINE	16	NO CHANGE	NO
50-001-OPN-40	N/A	CAUSTIC TANK OVERFLOW	16	NO CHANGE	NO
50-001-OPN-41	N/A	NITROGEN TANK FILL LINE	16	NO CHANGE	NO
50-001-OPN-42	N/A	BACK FLOW PREVENTER	57	NOI	NO
50-001-OPN-43	N/A	ACID TANK VENT	N/A	NO CHANGE	NO
50-001-OPN-44	N/A	SAMPLE LINE	N/A	NO CHANGE	NO
50-001-OPN-45	N/A	ELECT. CONDUIT	N/A	NO CHANGE	NO
50-001-OPN-46	N/A	DISHWASHER VENT	131	NO CHANGE	NO
50-001-OPN-47	N/A	DISHWASHER VENT	130	NO CHANGE	NO
50-001-OPN-48	N/A	CHEM. REACTOR VESSEL VENT	24	NO CHANGE	NO
50-001-OPN-49	N/A	BOTTLED GAS VENT	N/A	NO CHANGE	NO
50-001-OPN-50	N/A	VACUUM PUMP EXHAUST	116B	NO CHANGE	NO
50-001-OPN-51	RD01	ROOF	EXT.	NO CHANGE	NO
STORM	RD02	ROOF	EXT.	NO CHANGE	
50-001-OPN-52	PFD1	PENTHOUSE EQUIP. ROOM	216A	PIPE TO S.S./PLUG	YES
STORM	PFD2	PENTHOUSE	216	PIPE TO S.S/PLUG	
	RD03	ROOF	EXT.	NO CHANGE	
	RD04	ROOF	EXT.	NO CHANGE	
	RD05	ROOF	EXT.	NO CHANGE	
	RD06	ROOF	EXT.	NO CHANGE	
	RD07	ROOF	EXT.	NO CHANGE	
	RD08	ROOF	EXT.	NO CHANGE	
	RD09	ROOF	EXT.	NO CHANGE	
	RD10	ROOF	EXT.	NO CHANGE	
50-001-OPN-53	RD19	ROOF	EXT.	NO CHANGE	NO
STORM	RD20	ROOF	EXT.	NO CHANGE	
	RD21	ROOF	EXT.	NO CHANGE	
	RD22	ROOF	EXT.	NO CHANGE	
50-001-OPN-54	RD17	ROOF	EXT.	NO CHANGE	NO
STORM	RD18	ROOF	EXT.	NO CHANGE	
50-001-OPN-55	RD13	ROOF	EXT.	NO CHANGE	NO
STORM	RD14	ROOF	EXT.	NO CHANGE	
	RD16	ROOF	EXT.	NO CHANGE	

TABLE 2: TA 50-1 DRAIN SUMMARY

OUTFALL NUMBER	ID NUMBER	ROOM ACTIVITY	ROOM NUMBER	STATUS OR RECOMMENDATIONS	EPA FORM PREPARED
50-001-OPN-56	RD11	ROOF	EXT.	NO CHANGE	NO
	RD12	ROOF	EXT.	NO CHANGE	
50-001-OPN-57	RD15	ROOF	EXT.	NO CHANGE	NO
50-001-OPN-58	N/A	STORM DRAIN	EXT.	NO CHANGE	NO
50-001-OPN-59	N/A	STORM DRAIN	EXT.	NO CHANGE	NO
50-001-OPN-60	N/A	STORM DRAIN	EXT.	NO CHANGE	NO
50-001-OPN-61	N/A	STORM DRAIN	EXT.	NO CHANGE	NO
50-001-OPN-62	N/A	STORM DRAIN	EXT.	NO CHANGE	NO
50-001-OPN-63	N/A	STORM DRAIN	EXT.	NO CHANGE	NO
50-001-OPN-64	N/A	STORM DRAIN	EXT.	NO CHANGE	NO
50-001-OPN-65	N/A	STORM DRAIN	EXT.	NO CHANGE	NO
50-001-OPN-66	N/A	STORM DRAIN	EXT.	NO CHANGE	NO
50-001-OPN-67	N/A	STORM DRAIN	EXT.	NO CHANGE	NO
50-001-OPN-68	N/A	STORM DRAIN	EXT.	NO CHANGE	NO

TABLE 3: TA 50-2 DRAIN SUMMARY

OUTFALL NUMBER	ID NUMBER	ROOM ACTIVITY	ROOM NUMBER	STATUS OR RECOMMENDATIONS	EPA FORM PREPARED
50-002-OPN-1 RLW	1FD1	VESTIBULE	N/A	NO CHANGE	NO
	1FD2	PUMP ROOM	1	CONTAINERIZE	
	1FD3	PUMP ROOM	1	STOP WEEPAGE	
	1SP1	PUMP ROOM	1	NO CHANGE	
50-002-OPN-2 051051	N/A	BLDG 2	N/A	NO CHANGE	YES

TABLE 4: TA 50-4 DRAIN SUMMARY

OUTFALL NUMBER	ID NUMBER	ROOM ACTIVITY	ROOM NUMBER	STATUS OR RECOMMENDATIONS	EPA FORM PREPARED
50-004-OPN-1	N/A	TRANSFORMER	EXT.	MODIFY/SPCC	NO

TABLE 5: TA 50-5 DRAIN SUMMARY

OUTFALL NUMBER	ID NUMBER	ROOM ACTIVITY	ROOM NUMBER	STATUS OR RECOMMENDATIONS	EPA FORM PREPARED
50-005-OPN-1	N/A	NITRIC ACID TANK FILL	N/A	SPCC	NO
50-005-OPN-2	N/A	NITRIC ACID TANK OVERFLOW	N/A	SPCC	NO

TABLE 6: TA 50-37 DRAIN SUMMARY

OUTFALL NUMBER	ID NUMBER	ROOM ACTIVITY	ROOM NUMBER	STATUS OR RECOMMENDATIONS	EPA FORM PREPARED
50-037-OPN-01 SANITARY	1LV1	RESTROOM	16	NO CHANGE	NO
	1LV2	RESTROOM	14	NO CHANGE	
	1SD1	JANITOR'S CLOSET	12	LABEL	
	1TL1	RESTROOM	16	NO CHANGE	
	1TL2	RESTROOM	14	NO CHANGE	
	1UR1	RESTROOM	16	NO CHANGE	
	1WF1	CORRIDOR	N/A	NO CHANGE	
	2WF1	OFFICE	21	NO CHANGE	
50-037-OPN-02 SANITARY	1FD01	EQUIPMENT ROOM	111	CONTAINERIZE	NO
	1FD02	EQUIPMENT ROOM	111	VERIFY/PLUG	
	1FD03	EQUIPMENT ROOM	111	VERIFY/PLUG	
	1FD04	EQUIPMENT ROOM	111	CONTAINERIZE	
	1FD05	EQUIPMENT ROOM	111	NO CHANGE	
	1FD06	EQUIPMENT ROOM	111	NO CHANGE	
	1FD07	RESTROOM	104	NO CHANGE	
	1FD08	RESTROOM	103	NO CHANGE	
	1LV3	RESTROOM	104	NO CHANGE	
	1LV4	RESTROOM	103	NO CHANGE	
	1SH1	RESTROOM	104	NO CHANGE	
	1SH2	RESTROOM	103	NO CHANGE	
	1TL3	RESTROOM	104	NO CHANGE	
	1TL4	RESTROOM	103	NO CHANGE	
	1UR2	RESTROOM	103	NO CHANGE	
	1WF2	CORRIDOR	106	NO CHANGE	
	2FD07	RESTROOM	206	NO CHANGE	
	2FD08	RESTROOM	208	NO CHANGE	
	2LV1	RESTROOM	206	NO CHANGE	
	2LV2	RESTROOM	208	NO CHANGE	
	2LV3	RESTROOM	208	NO CHANGE	
	2SD2	JANIROR CLOSET	208	LABEL	
	2TL1	RESTROOM	206	NO CHANGE	
	2TL2	RESTROOM	208	NO CHANGE	
	2TL3	RESTROOM	208	NO CHANGE	
	2UR1	RESTROOM	208	NO CHANGE	
	2UR2	RESTROOM	208	NO CHANGE	
	2WF2	CORRIDOR	21	NO CHANGE	
50-037-OPN-03 RLW	AD1	OUTSIDE BUILDING	EXT.	ROOF/BERM	NO
	1FD09	HOT CHEMISTRY LAB	107	NO CHANGE	
	1FD10	CONTROL ROOM	108	PLUGGED	
	1FD11	CONTROLLED AIR INCINERATOR	112	NO CHANGE	

TABLE 6: TA 50-37 DRAIN SUMMARY

OUTFALL NUMBER	ID NUMBER	ROOM ACTIVITY	ROOM NUMBER	STATUS OR RECOMMENDATIONS	EPA FORM PREPARED
50-037-OPN-03 RLW CONT.	1FD12	CONTROLLED AIR INCINERATOR	112	NO CHANGE	NO
	1FD13	HOT MACHINE SHOP	110	NO CHANGE	
	1FD14	CORRIDOR	113	PLUGGED	
	1FD15	CONTROLLED AIR INCINERATOR	112	NO CHANGE	
	1FD16	CONTROLLED AIR INCINERATOR	112	NO CHANGE	
	1FD17	CONTROLLED AIR INCINERATOR	112	NO CHANGE	
	1FD18	CONTROLLED AIR INCINERATOR	112	NO CHANGE	
	1FD19	CONTROLLED AIR INCINERATOR	112	NO CHANGE	
	1FD20	CONTROLLED AIR INCINERATOR	112	NO CHANGE	
	1IM1	CORRIDOR	113	NO CHANGE	
	1SD3	CORRIDOR	113	NO CHANGE	
	1SD4	HOT CHEMISTRY LAB	107	NO CHANGE	
	1SD5	HOT CHEMISTRY LAB	107	NO CHANGE	
	1SD6	CONTROLLED AIR INCINERATOR	112	NO CHANGE	
	2FD01	OFFICE	205	PLUGGED	
	2FD02	OFFICE	205	PLUGGED	
	2FD03	CHEMISTRY ROOM	204	PLUGGED	
	2FD04	CHEMISTRY ROOM	204	PLUGGED	
	2FD05	ELECTRONICS LAB	203	PLUGGED	
	2FD06	ELECTRONICS LAB	203	PLUGGED	
	2FD09	OFFICE	209A	PLUGGED	
	2FD10	OFFICE	209B	PLUGGED	
	2FD11	BREAK ROOM	209	PLUGGED	
	2FD12	BREAK ROOM	209	PLUGGED	
	2SD1	BREAK ROOM	209	NO CHANGE	
	2SD3	CHEMISTRY ROOM	204	NO CHANGE	
	2SD4	CHEMISTRY ROOM	204	NO CHANGE	
50-037-OPN-04 RLW	1FD21	EGRESS BAY	116	NO CHANGE	NO
	1FD22	HIGH BAY AREA	114	NO CHANGE	
	1FD23	HIGH BAY AREA	114	NO CHANGE	
	1FD24	HIGH BAY AREA	114	NO CHANGE	
	1FD25	HIGH BAY AREA	114	NO CHANGE	
50-037-OPN-05	N/A	FIRE SYSTEM DRAIN	111	NOI	NO
50-037-OPN-06	N/A	FIRE SYSTEM DRAIN	111	NOI	NO
50-037-OPN-07	N/A	FIRE SYSTEM DRAIN	111	NOI	NO
50-037-OPN-08	N/A	FIRE SYSTEM DRAIN	116	NOI	NO
50-037-OPN-09	N/A	FIRE SYSTEM DRAIN	114	NOI	NO
50-037-OPN-10	N/A	FIRE SYSTEM DRAIN	114	NOI	NO
50-037-OPN-11	N/A	FIRE SYSTEM DRAIN	114	NOI	NO
50-037-OPN-12	N/A	FIRE SYSTEM DRAIN	118	NOI	NO

TABLE 6: TA 50-37 DRAIN SUMMARY

OUTFALL NUMBER	ID NUMBER	ROOM ACTIVITY	ROOM NUMBER	STATUS OR RECOMMENDATIONS	EPA FORM PREPARED
50-037-OPN-13	N/A	FIRE SYSTEM DRAIN	12	NOI	NO
50-037-OPN-14	N/A	CAUSTIC TANK VENT	111	NO CHANGE	NO
50-037-OPN-15	N/A	CAUSTIC TANK FILL	111	NO CHANGE	NO
50-037-OPN-16	N/A	NON-POTABLE WATER	111	NO CHANGE	NO
50-037-OPN-17	N/A	NON-POTABLE WATER	111	NO CHANGE	NO
50-037-OPN-18	N/A	NATURAL GAS VENT	111	NO CHANGE	NO
50-037-OPN-19	N/A	NATURAL GAS VENT	112	NO CHANGE	NO
50-037-OPN-20	N/A	STACK DRAIN	EXT.	TEST/CONTAIN	NO
50-037-OPN-21	N/A	PLUMBING VENT	209	NO CHANGE	NO
50-037-OPN-22	N/A	GAS VENT	112	NO CHANGE	NO
50-037-OPN-23	N/A	GAS VENT	112	NO CHANGE	NO
50-037-OPN-24	N/A	GAS VENT	112	NO CHANGE	NO
50-037-OPN-25	N/A	GAS VENT	112	NO CHANGE	NO
50-037-OPN-26	N/A	GAS VENT	112	NO CHANGE	NO
50-037-OPN-27	N/A	GAS VENT	112	NO CHANGE	NO
50-037-OPN-28	N/A	GAS VENT	112	NO CHANGE	NO
50-037-OPN-29	N/A	GAS VENT	112	NO CHANGE	NO
50-037-OPN-30 STORM	RD11	ROOF DRAIN	ROOF	NO CHANGE	NO
	RD12	ROOF DRAIN	ROOF	NO CHANGE	
50-037-OPN-31 STORM	RD07	ROOF DRAIN	ROOF	NO CHANGE	NO
	RD08	ROOF DRAIN	ROOF	NO CHANGE	
	RD09	ROOF DRAIN	ROOF	NO CHANGE	
	RD10	ROOF DRAIN	ROOF	NO CHANGE	
50-037-OPN-32	RD13	ROOF DRAIN	ROOF	NO CHANGE	NO
50-037-OPN-33	RD14	ROOF DRAIN	ROOF	NO CHANGE	NO
50-037-OPN-34 STORM	RD02	ROOF DRAIN	ROOF	NO CHANGE	NO
	RD03	ROOF DRAIN	ROOF	NO CHANGE	
50-037-OPN-35 STORM	RD01	ROOF DRAIN	ROOF	NO CHANGE	NO
	RD04	ROOF DRAIN	ROOF	NO CHANGE	
50-037-OPN-36	RD05	ROOF DRAIN	ROOF	NO CHANGE	NO
50-037-OPN-37	RD06	ROOF DRAIN	ROOF	NO CHANGE	NO
50-037-OPN-38	N/A	STORM WATER	ROOF	NO CHANGE	NO
50-037-OPN-39	N/A	STORM WATER	ROOF	NO CHANGE	NO
50-037-OPN-40	N/A	STORM WATER	ROOF	NO CHANGE	NO
50-037-OPN-41	N/A	STORM WATER	ROOF	NO CHANGE	NO

TABLE 7: TA 50-42 DRAIN SUMMARY

OUTFALL NUMBER	ID NUMBER	ROOM ACTIVITY	ROOM NUMBER	STATUS OR RECOMMENDATIONS	EPA FORM PREPARED
50-042-OPN-1	N/A	CO2 LIQUID FILL	EXT.	NO CHANGE	NO
50-042-OPN-2	N/A	CO2 VENT	EXT.	NO CHANGE	NO
50-042-OPN-3	N/A	CO2 VENT	EXT.	NO CHANGE	NO

TABLE 8: TA 50-48 DRAIN SUMMARY

OUTFALL NUMBER	ID NUMBER	ROOM ACTIVITY	ROOM NUMBER	STATUS OR RECOMMENDATIONS	EPA FORM PREPARED
50-048-OPN-01 SANITARY	N/A	COOLING TOWER SUMP OVERFLOW	N/A	VERIFY	NO
50-048-OPN-02	N/A	COOLING TOWER TANK DRAIN	N/A	ROUTE TO S.S.	NO
50-048-OPN-03	N/A	COOLING TOWER TANK DRAIN	N/A	ROUTE TO S.S.	NO
50-048-OPN-04	N/A	COOLING TOWER TANK DRAIN	N/A	ROUTE TO S.S.	NO
50-048-OPN-05	N/A	CAPPED PIPE	N/A	NO CHANGE	NO
50-048-OPN-06	N/A	COOLING TOWER TANK DRAIN	N/A	ROUTE TO S.S.	NO
50-048-OPN-07	N/A	COOLING TOWER TANK DRAIN	N/A	ROUTE TO S.S.	NO
50-048-OPN-08	N/A	COOLING TOWER TANK DRAIN	N/A	ROUTE TO S.S.	NO

TABLE 9: TA 50-54 DRAIN SUMMARY

OUTFALL NUMBER	ID NUMBER	ROOM ACTIVITY	ROOM NUMBER	STATUS OR RECOMMENDATIONS	EPA FORM PREPARED
50-054-OPN-01 SANITARY	1FD1	RESTROOM	N/A	NO CHANGE	NO
	1FD2	WAREHOUSE	N/A	PLUG	
	1FD3	WAREHOUSE	N/A	PLUG	
	1LV1	RESTROOM	N/A	NO CHANGE	
	1SD1	WAREHOUSE	N/A	LABEL	
	1TL1	RESTROOM	N/A	NO CHANGE	
	1WF1	WAREHOUSE	N/A	NO CHANGE	
50-054-OPN-02 SANITARY	1FS1	WAREHOUSE	N/A	CONTAINERIZE	NO
50-054-OPN-03	1ED1	WAREHOUSE	N/A	ELIMINATE	NO
50-054-OPN-04	RD2	STORM DRAIN	ROOF	NO CHANGE	NO
50-054-OPN-05	RD3	STORM DRAIN	ROOF	NO CHANGE	NO
50-054-OPN-06	RD4	STORM DRAIN	ROOF	NO CHANGE	NO
50-054-OPN-07	RD1	STORM DRAIN	ROOF	NO CHANGE	NO
50-054-OPN-08	N/A	FIRE SYSTEM DRAIN	N/A	NOI	NO
50-054-OPN-09	N/A	FIRE SYSTEM DRAIN	N/A	NOI	NO
50-054-OPN-10	N/A	FIRE SYSTEM DRAIN	N/A	NOI	NO
50-054-OPN-11	N/A	FIRE SYSTEM DRAIN	N/A	NOI	NO

TABLE 9: TA 50-54 DRAIN SUMMARY

OUTFALL NUMBER	ID NUMBER	ROOM ACTIVITY	ROOM NUMBER	STATUS OR RECOMMENDATIONS	EPA FORM PREPARED
50-054-OPN-12	N/A	NATURAL GAS VENT	EXT.	NO CHANGE	NO
50-054-OPN-13	N/A	NATURAL GAS VENT	EXT.	NO CHANGE	NO

TABLE 10: TA 50-69 DRAIN SUMMARY

OUTFALL NUMBER	ID NUMBER	ROOM ACTIVITY	ROOM NUMBER	STATUS OR RECOMMENDATIONS	EPA FORM PREPARED
50-069-OPN-01 SANITARY	1TL1	RESTROOM	101B	NO CHANGE	NO
	1UR1	RESTROOM	101B	NO CHANGE	
	1WF1	SIZE REDUCTION FACILITY	102	REMOVED	
50-069-OPN-02 RLW	1FD1	SIZE REDUCTION FACILITY	102	NO CHANGE	NO
	1FD2	SIZE REDUCTION FACILITY	102	NO CHANGE	
	1FD3	SIZE REDUCTION FACILITY	102	NO CHANGE	
	1FS1	SIZE REDUCTION FACILITY	102	NO CHANGE	
	1LV1	RESTROOM	101B	NO CHANGE	
	1SH1	SHOWER ROOM	101A	NO CHANGE	
50-069-OPN-03 RLW	N/A	RLW TO STORAGE TANK	102	MODIFY	NO
50-069-OPN-04	N/A	FIRE SYSTEM DRAIN	102	NOI	NO
50-069-OPN-05	N/A	FIRE SYSTEM DRAIN	102	NOI	NO
50-069-OPN-06	N/A	FIRE SYSTEM DRAIN	102	NOI	NO
50-069-OPN-07	N/A	FIRE SYSTEM DRAIN	102	NOI	NO
50-069-OPN-08	RD1	ROOF	ROOF	NO CHANGE	NO
50-069-OPN-09	RD2	ROOF	ROOF	NO CHANGE	NO
50-069-OPN-10	RD3	ROOF	ROOF	NO CHANGE	NO
50-069-OPN-11	RD4	ROOF	ROOF	NO CHANGE	NO
50-069-OPN-12	RD5	ROOF	ROOF	NO CHANGE	NO
50-069-OPN-13	RD6	ROOF	ROOF	NO CHANGE	NO
50-069-OPN-14	N/A	STORM WATER	ROOF	NO CHANGE	NO
50-069-OPN-15	N/A	STORM WATER	ROOF	NO CHANGE	NO
50-069-OPN-16	N/A	STORM WATER	ROOF	NO CHANGE	NO
50-069-OPN-17	N/A	STORM WATER	ROOF	NO CHANGE	NO
50-069-OPN-18	N/A	BREATHING AIR VENT	102	NO CHANGE	NO
50-069-OPN-19	N/A	BREATHING AIR PRV	102	NO CHANGE	NO
50-069-OPN-20	N/A	CAPPED STUB	102	NO CHANGE	NO
50-069-OPN-21	N/A	CAPPED STUB	102	NO CHANGE	NO
50-069-OPN-22	N/A	STACK DRAIN	EXT.	TEST/CONTAIN	NO
50-069-OPN-23	N/A	WATER HEATER PRV	102	NOI	NO
50-069-OPN-24	N/A	SECONDARY CONTAINMENT DRAIN	EXT.	LOCK/SPCC	NO
50-069-OPN-25	N/A	RAD STORAGE TANK VENT	EXT.	NO CHANGE	NO
50-069-OPN-26	N/A	UNKNOWN OUTFALL	102	VERIFY/REMOVE	NO

TABLE 11: TA 50-83 DRAIN SUMMARY

OUTFALL NUMBER	ID NUMBER	ROOM ACTIVITY	ROOM NUMBER	STATUS OR RECOMMENDATIONS	EPA FORM PREPARED
50-083-OPN-1	N/A	CONDUIT STUB OUT	101	NO CHANGE	NO
50-083-OPN-2	N/A	NON-POTABLE WATER	101A	NO CHANGE	NO

TABLE 12: TA 50-84 DRAIN SUMMARY

OUTFALL NUMBER	ID NUMBER	ROOM ACTIVITY	ROOM NUMBER	STATUS OR RECOMMENDATIONS	EPA FORM PREPARED
50-084-OPN-01 SANITARY	1LV1	RESTROOM	108	NO CHANGE	NO
	1LV2	RESTROOM	112	NO CHANGE	
	1SD1	CORRIDOR		LABEL	
	1SD2	JANITOR CLOSET	110	LABEL	
	1TL1	RESTROOM	108	NO CHANGE	
	1TL2	RESTROOM	112	NO CHANGE	
50-084-OPN-02	N/A	EVAPORATIVE COOLER	EXT.	NOI	NO
50-084-OPN-03	N/A	STORM DRAIN DOWNSPOUT	EXT.	NO CHANGE	NO
50-084-OPN-04	N/A	WATER HEATER PRV	N/A	NOI	NO

TABLE 13: TA 50-90 DRAIN SUMMARY

OUTFALL NUMBER	ID NUMBER	ROOM ACTIVITY	ROOM NUMBER	STATUS OR RECOMMENDATIONS	EPA FORM PREPARED
50-090-OPN-1	N/A	RAD WASTE STORAGE TANK DRAIN	N/A	SPCC	NO
50-090-OPN-2	N/A	RAD WASTE STORAGE TANK DRAIN	N/A	SPCC	NO
50-090-OPN-3 RLW	N/A	RAD WASTE STORAGE TANK	N/A	NO CHANGE	NO
50-090-OPN-4 RLW	N/A	RAD WASTE STORAGE TANK	N/A	NO CHANGE	NO

TABLE 14: TA 50-107 DRAIN SUMMARY

OUTFALL NUMBER	ID NUMBER	ROOM ACTIVITY	ROOM NUMBER	STATUS OR RECOMMENDATIONS	EPA FORM PREPARED
50-107-OPN-1	N/A	STACK DRAIN	EXT.	TEST/SPCC	NO

TABLE 15: TA 50-183 DRAIN SUMMARY

OUTFALL NUMBER	ID NUMBER	ROOM ACTIVITY	ROOM NUMBER	STATUS OR RECOMMENDATIONS	EPA FORM PREPARED
50-183-OPN-1	N/A	TANK DRAIN	EXT.	SPCC	NO
50-183-OPN-2	N/A	FUEL LINE TO DIESEL	EXT.	NO CHANGE	NO
50-183-OPN-3	N/A	OVERFLOW FROM DIESEL	EXT.	NO CHANGE	NO
50-183-OPN-4	N/A	TANK VENT	EXT.	NO CHANGE	NO
50-183-OPN-5	N/A	CONTAINMENT VAULT VENT	EXT.	NO CHANGE	NO

TABLE 16: TA 50-185 DRAIN SUMMARY

OUTFALL NUMBER	ID NUMBER	ROOM ACTIVITY	ROOM NUMBER	STATUS OR RECOMMENDATIONS	EPA FORM PREPARED
50-185-OPN-1 RLW HOLD TANK	N/A	NON-POTABEL WATER	N/A	NO CHANGE	NO
50-185-OPN-2	N/A	TERITIARY CONTAINMENT DRAIN	N/A	LOCK/SPCC	NO
50-185-OPN-3	N/A	CONDENSATE DRAIN	EXT.	NOI	NO
50-185-OPN-4	N/A	BREATHING AIR VENT	EXT.	NO CHANGE	NO
50-185-OPN-5	N/A	BREATHING AIR VENT	EXT.	NO CHANGE	NO

TABLE 17: TA 50-191 DRAIN SUMMARY

50-191-OPN-1	N/A	VAPOR EXHAUST	N/A	NO CHANGE	NO
50-191-OPN-2	N/A	STUB OUT	N/A	NO CHANGE	NO
50-191-OPN-3	N/A	OIL DRAIN	N/A	LOCK/SPCC	NO

TABLE 18

NON DRAIN RECOMMENDATIONS

TECHNICAL AREA	BUILDING NUMBER	ROOM OR LOCATION	RECOMMENDATION
50	2	50-2 HOLDING TANKS	SECONDARY CONTAINMENT
50	2	50-2 HOLDING TANKS	SOIL TESTING
50	69	RLW STORAGE TANK	DOUBLE WALLED PIPING
50	69	RLW STORAGE TANK	SECONDARY CONTAINMENT
50	ALL		LABEL RLW DRAINS

REPORT # 72

TA	BLDG	OUTLET PIPING NO	EPA OUTFALL #	DRAIN #	ROOM #	ROOM DESCRIPTION	FLOW RATE		PERIODICITY	SEASONAL	SOURCE TYPES
50	1	50-001-OPN-01	13S/SWSC	BFD01	7B	RESTROOM			5 DAYS A WEEK	No	FLOOR WASHINGS
50	1	50-001-OPN-01	13S/SWSC	BFD02	7A	RESTROOM			5 DAYS A WEEK	No	FLOOR WASHINGS
50	1	50-001-OPN-01	13S/SWSC	BLV1	7B	RESTROOM			5 DAYS A WEEK	No	HAND WASHINGS
50	1	50-001-OPN-01	13S/SWSC	BLV2	7A	RESTROOM			5 DAYS A WEEK	No	HAND WASHINGS
50	1	50-001-OPN-01	13S/SWSC	BTL1	7B	RESTROOM			5 DAYS A WEEK	No	TOILET
50	1	50-001-OPN 01	13S/SWSC	BTL2	7A	RESTROOM			5 DAYS A WEEK	No	TOILET
50	1	50-001-OPN-01	13S/SWSC	BUR1	7B	RESTROOM			5 DAYS A WEEK	No	URINAL
50	1	50-001-OPN-02	13S/SWSC	1ED1	124	CHEMISTRY LAB			FLOW IS NIL	No	CHILLER DRAIN
50	1	50-001-OPN-02	13S/SWSC	1ED2	124	CHEMISTRY LAB			FLOW IS NIL	No	CHILLER DRAIN
50	1	50-001-OPN 02	13S/SWSC	1LV1	110	RESTROOM			5 DAYS A WEEK	No	HAND WASHINGS
50	1	50-001-OPN-02	13S/SWSC	1LV2	110	RESTROOM			5 DAYS A WEEK	No	HAND WASHINGS
50	1	50-001-OPN-02	13S/SWSC	1LV3	111	RESTROOM			5 DAYS A WEEK	No	HAND WASHINGS
50	1	50-001-OPN-02	13S/SWSC	1SD01	N/A	JANITORS CLOSET			5 DAYS A WEEK	No	MOP WATER
50	1	50-001-OPN-02	13S/SWSC	1SD04	115	LUNCH ROOM			5 DAYS A WEEK	No	DISH WASHINGS
50	1	50-001-OPN-02	13S/SWSC	1SD05	115	LUNCH ROOM			5 DAYS A WEEK	No	DISH WASHINGS
50	1	50-001-OPN 02	13S/SWSC	1SH1	110	RESTROOM			5 DAYS A WEEK	No	SHOWER
50	1	50-001-OPN-02	13S/SWSC	1SH2	110	RESTROOM			5 DAYS A WEEK	No	SHOWER
50	1	50-001-OPN 02	13S/SWSC	1SH3	111	RESTROOM			5 DAYS A WEEK	No	SHOWER
50	1	50-001-OPN-02	13S/SWSC	1TL1	110	RESTROOM			5 DAYS A WEEK	No	TOILET
50	1	50-001-OPN-02	13S/SWSC	1TL2	110	RESTROOM			5 DAYS A WEEK	No	TOILET
50	1	50-001-OPN-02	13S/SWSC	1TL3	111	RESTROOM			5 DAYS A WEEK	No	TOILET
50	1	50-001-OPN-02	13S/SWSC	1UR1	110	RESTROOM			5 DAYS A WEEK	No	URINAL
50	1	50-001-OPN-02	13S/SWSC	1UR2	110	RESTROOM			5 DAYS A WEEK	No	URINAL
50	1	50-001-OPN-02	13S/SWSC	1WF1	N/A	CORRIDOR			5 DAYS A WEEK	No	WATER FOUNTAIN
50	1	50-001-OPN-02	13S/SWSC	BED2	14	EQUIPMENT ROOM			FLOW IS NIL	Yes	A/C CONDENSATE
50	1	50-001-OPN-02	13S/SWSC	BED2	14	EQUIPMENT ROOM	60	GPD	5 DAYS A WEEK	No	AIR COMPRESSOR DRAIN (2)
50	1	50-001-OPN-02	13S/SWSC	BED2	14	EQUIPMENT ROOM	60	GPD	5 DAYS A WEEK	No	AIR TANK DRAIN (2)
50	1	50-001-OPN-02	13S/SWSC	BFD03	14	EQUIPMENT ROOM			FLOW IS NIL	No	FLOOR WASHINGS
50	1	50-001-OPN-02	13S/SWSC	BFD04	14	EQUIPMENT ROOM			FLOW IS NIL	No	EXPANSION TANK DRAIN
50	1	50-001-OPN 02	13S/SWSC	BFD04	14	EQUIPMENT ROOM			FLOW IS NIL	No	WATER HEATER PRVs (2)
50	1	50-001-OPN-02	13S/SWSC	BFD04	14	EQUIPMENT ROOM			FLOW IS NIL	No	BOILER PRV (4)
50	1	50-001-OPN 02	13S/SWSC	BFD04	14	EQUIPMENT ROOM			FLOW IS NIL	No	BOILER DRAINS (2)
50	1	50-001-OPN-02	13S/SWSC	BFD04	14	EQUIPMENT ROOM			FLOW IS NIL	No	BOILER REGULATORS (2)

REPORT # 72

TA	BLDG	OUTLET PIPING NO	EPA OUTFALL #	DRAIN #	ROOM #	ROOM DESCRIPTION	FLOW RATE		PERIODICITY	SEASONAL	SOURCE TYPES
50	1	50-001-OPN-02	13S/SWSC	BFD05	N/A	FILTER ROOM			NOT FOUND	No	NOT FOUND
50	1	50-001-OPN-02	13S/SWSC	BFD06	14	EQUIPMENT ROOM			FLOW IS NIL	No	BOILER DRAIN
50	1	50-001-OPN-02	13S/SWSC	BFD06	14	EQUIPMENT ROOM			FLOW IS NIL	No	EXPANSION TANK DRAIN
50	1	50-001-OPN-02	13S/SWSC	BFD06	14	EQUIPMENT ROOM			FLOW IS NIL	No	HOT WATER DRAIN
50	1	50-001-OPN-02	13S/SWSC	BFD07	14	EQUIPMENT ROOM			FLOW IS NIL	No	BFPs (2)
50	1	50-001-OPN-02	13S/SWSC	BFD07	14	EQUIPMENT ROOM			FLOW IS NIL	No	HOT WATER DRAIN
50	1	50-001-OPN-02	13S/SWSC	BFD07	14	EQUIPMENT ROOM			FLOW IS NIL	No	CHILLER DRAINS (2)
50	1	50-001-OPN-02	13S/SWSC	BFD07	14	EQUIPMENT ROOM			FLOW IS NIL	No	CONDENSER DRAIN
50	1	50-001-OPN-02	13S/SWSC	BFD08	N/A	FILTER ROOM			NOT FOUND	No	NOT FOUND
50	1	50-001-OPN-02	13S/SWSC	BFD27	30	EQUIPMENT ROOM	25	GPD	5 DAYS A WEEK	No	AFTER COOLER DRAIN
50	1	50-001-OPN-02	13S/SWSC	BFD27	30	EQUIPMENT ROOM			FLOW IS NIL	No	AIR COMPRESSOR DRAIN
50	1	50-001-OPN-02	13S/SWSC	BLV3	31	RESTROOM			5 DAYS A WEEK	No	HAND WASHINGS
50	1	50-001-OPN-02	13S/SWSC	BLV4	33	RESTROOM			5 DAYS A WEEK	No	HAND WASHINGS
50	1	50-001-OPN 02	13S/SWSC	BLV5	33	RESTROOM			5 DAYS A WEEK	No	HAND WASHINGS
50	1	50-001-OPN 02	13S/SWSC	BSH1	31	RESTROOM			5 DAYS A WEEK	No	SHOWER
50	1	50-001-OPN-02	13S/SWSC	BSH2	31	RESTROOM			5 DAYS A WEEK	No	SHOWER
50	1	50-001-OPN-02	13S/SWSC	BSH3	33	RESTROOM			5 DAYS A WEEK	No	SHOWER
50	1	50-001-OPN-02	13S/SWSC	BTL3	31	RESTROOM			5 DAYS A WEEK	No	TOILET
50	1	50-001-OPN-02	13S/SWSC	BTL4	33	RESTROOM			5 DAYS A WEEK	No	TOILET
50	1	50-001-OPN-02	13S/SWSC	BUR2	31	RESTROOM			5 DAYS A WEEK	No	URINAL
50	1	50-001-OPN-02	13S/SWSC	BWF2	N/A	CORRIDOR			5 DAYS A WEEK	No	WATER FOUNTAIN
50	1	50-001-OPN-02	13S/SWSC	N/A	N/A	CORRIDOR			FLOW IS NIL	No	BFPs (2)
50	1	50-001-OPN-03	13S/SWSC	BSD26	46	LUNCH ROOM			5 DAYS A WEEK	No	DISH WASHINGS
50	1	50-001-OPN-03	13S/SWSC	BWF3	46	LUNCH ROOM			5 DAYS A WEEK	No	WATER FOUNTAIN
50	1	50-001-OPN-04	RLW	1FD01	110	RESTROOM			FLOW IS NIL	No	FLOOR WASHINGS
50	1	50-001-OPN-04	RLW	1FD02	111	RESTROOM			FLOW IS NIL	No	FLOOR WASHINGS
50	1	50-001-OPN-04	RLW	1SD02	114	OFFICE			NO FLOW	No	NONE
50	1	50-001-OPN-04	RLW	1SD03	113	OFFICE			NO FLOW	No	NONE
50	1	50-001-OPN-04	RLW	BSD12	1	CHEM LAB			5 DAYS A WEEK	No	FUME HOOD SINK
50	1	50-001-OPN-05	RLW	BCD08	49	DECONTAMINATION			5 DAYS A WEEK	No	LAB CUP DRAIN
50	1	50-001-OPN-05	RLW	BCD09	48	COUNT LAB			5 DAYS A WEEK	No	FUME HOOD CUP DRAIN
50	1	50-001-OPN-05	RLW	BCD10	48	COUNT LAB			5 DAYS A WEEK	No	FUME HOOD CUP DRAIN
50	1	50-001-OPN-05	RLW	BCD11	41	RESPIRATOR LAUNDRY			5 DAYS A WEEK	No	LAB CUP DRAIN

REPORT # 72

TA	BLDG	OUTLET PIPING NO	EPA OUTFALL #	DRAIN #	ROOM #	ROOM DESCRIPTION	FLOW RATE		PERIODICITY	SEASONAL	SOURCE TYPES
50	1	50-001-OPN-05	RLW	BDW3	41	RESPIRATOR LAUNDRY			5 DAYS A WEEK	No	DISHWASHER
50	1	50-001-OPN-05	RLW	BFD38	49	DECONTAMINATION			5 DAYS A WEEK	No	FLOOR WASHINGS
50	1	50-001-OPN-05	RLW	BFD39	49	DECONTAMINATION			5 DAYS A WEEK	No	FLOOR WASHINGS
50	1	50-001-OPN-05	RLW	BFD40	49	DECONTAMINATION			5 DAYS A WEEK	No	FLOOR WASHINGS
50	1	50-001-OPN-05	RLW	BFD41	N/A	CORRIDOR			5 DAYS A WEEK	No	FLOOR WASHINGS
50	1	50-001-OPN-05	RLW	BFD42	41	RESPIRATOR LAUNDRY			5 DAYS A WEEK	No	FLOOR WASHINGS
50	1	50-001-OPN-05	RLW	BFD43	41	RESPIRATOR LAUNDRY			5 DAYS A WEEK	No	FLOOR WASHINGS
50	1	50-001-OPN-05	RLW	BSD23	41	RESPIRATOR LAUNDRY			5 DAYS A WEEK	No	LAB SINK
50	1	50-001-OPN-05	RLW	BSD24	49	DECONTAMINATION			5 DAYS A WEEK	No	LAB SINK
50	1	50-001-OPN-05	RLW	BSD25	48	COUNT LAB			5 DAYS A WEEK	No	LAB SINK
50	1	50-001-OPN-05	RLW	BSD27	41	RESPIRATOR LAUNDRY			5 DAYS A WEEK	No	LAB SINK
50	1	50-001-OPN-05	RLW	N/A	41	RESPIRATOR LAUNDRY			5 DAYS A WEEK	No	EFPs (2)
50	1	50-001-OPN-06	RLW	BFD36	36	MORGUE			NO FLOW	No	CADAVER TANK DRAIN
50	1	50-001-OPN-07	RLW	BED3	36	MORGUE			NO FLOW	No	AUTOPSY TABLE
50	1	50-001-OPN-08	RLW	BFD34	36	MORGUE			NO FLOW	No	CADAVER TANK DRAIN
50	1	50-001-OPN-09	RLW	BAD1	EXT.	EXTERNAL			FLOW IS NIL	No	FLOOR WASHINGS
50	1	50-001-OPN-09	RLW	BFD37	38	STORAGE			FLOW IS NIL	No	FLOOR WASHINGS
50	1	50-001-OPN-09	RLW	BSD22	38A	COUNT ROOM			5 DAYS A WEEK	No	LAB SINK
50	1	50-001-OPN-10	RLW	BCD07	34B	HEAVY EQUIPMENT DECON			5 DAYS A WEEK	No	LAB CUP DRAIN
50	1	50-001-OPN-10	RLW	BFD35	36	MORGUE			FLOW IS NIL	No	FLOOR WASHINGS
50	1	50-001-OPN-10	RLW	BSD21	34B	HEAVY EQUIPMENT DECON			5 DAYS A WEEK	No	MOP WATER
50	1	50-001-OPN-11	RLW	BFD31	34B	HEAVY EQUIPMENT DECON			FLOW IS NIL	No	FLOOR WASHINGS
50	1	50-001-OPN-12	RLW	1CD01	116	PROCESS PLANT			5 DAYS A WEEK	No	FUME HOOD CUP DRAIN
50	1	50-001-OPN-12	RLW	1CD02	130	RAD. CHEMISTRY LAB			5 DAYS A WEEK	No	FUME HOOD CUP DRAIN
50	1	50-001-OPN-12	RLW	1CD03	130	RAD. CHEMISTRY LAB			5 DAYS A WEEK	No	FUME HOOD CUP DRAIN
50	1	50-001-OPN-12	RLW	1CD04	130	RAD. CHEMISTRY LAB			5 DAYS A WEEK	No	LAB CUP DRAIN
50	1	50-001-OPN-12	RLW	1CD05	130	RAD. CHEMISTRY LAB			5 DAYS A WEEK	No	LAB CUP DRAIN
50	1	50-001-OPN-12	RLW	1CD06	130	RAD. CHEMISTRY LAB			5 DAYS A WEEK	No	LAB CUP DRAIN
50	1	50-001-OPN-12	RLW	1CD07	130	RAD. CHEMISTRY LAB			5 DAYS A WEEK	No	LAB CUP DRAIN
50	1	50-001-OPN-12	RLW	1CD08	130	RAD. CHEMISTRY LAB			5 DAYS A WEEK	No	FUME HOOD CUP DRAIN
50	1	50-001-OPN-12	RLW	1CD09	130	RAD. CHEMISTRY LAB			5 DAYS A WEEK	No	FUME HOOD CUP DRAIN
50	1	50-001-OPN-12	RLW	1CD10	131	RAD. CHEMISTRY LAB			5 DAYS A WEEK	No	LAB CUP DRAIN
50	1	50-001-OPN-12	RLW	1CD11	131	RAD. CHEMISTRY LAB			5 DAYS A WEEK	No	LAB CUP DRAIN

REPORT # 72

TA	BLDG	OUTLET PIPING NO	EPA OUTFALL #	DRAIN #	ROOM #	ROOM DESCRIPTION	FLOW RATE		PERIODICITY	SEASONAL	SOURCE TYPES
50	1	50-001-OPN-12	RLW	1CD12	131	RAD. CHEMISTRY LAB			5 DAYS A WEEK	No	LAB CUP DRAIN
50	1	50-001-OPN-12	RLW	1CD13	131	RAD. CHEMISTRY LAB			5 DAYS A WEEK	No	LAB CUP DRAIN
50	1	50-001-OPN-12	RLW	1CD14	131	RAD. CHEMISTRY LAB			5 DAYS A WEEK	No	FUME HOOD CUP DRAIN
50	1	50-001-OPN-12	RLW	1CD15	131	RAD. CHEMISTRY LAB			5 DAYS A WEEK	No	FUME HOOD CUP DRAIN
50	1	50-001-OPN-12	RLW	1CD16	131	RAD. CHEMISTRY LAB			5 DAYS A WEEK	No	FUME HOOD CUP DRAIN
50	1	50-001-OPN-12	RLW	1CD17	131	RAD. CHEMISTRY LAB			5 DAYS A WEEK	No	FUME HOOD CUP DRAIN
50	1	50-001-OPN-12	RLW	1DW1	124	CHEMISTRY LAB			5 DAYS A WEEK	No	DISHWASHER
50	1	50-001-OPN-12	RLW	1DW2	130	RAD. CHEMISTRY LAB			5 DAYS A WEEK	No	DISHWASHER
50	1	50-001-OPN-12	RLW	1DW3	131	RAD. CHEMISTRY LAB			5 DAYS A WEEK	No	DISHWASHER
50	1	50-001-OPN-12	RLW	1ED3	123	CHEMISTY LAB			5 DAYS A WEEK	No	FUME HOOD WASHDOWN
50	1	50-001-OPN-12	RLW	1ED4	130	RAD. CHEMISTRY LAB			5 DAYS A WEEK	No	FUME HOOD WASHDOWN
50	1	50-001-OPN-12	RLW	1ED5	131	RAD. CHEMISTRY LAB			5 DAYS A WEEK	No	FUME HOOD WASHDOWN
50	1	50-001-OPN-12	RLW	1FD12	123A	OFFICE			NO FLOW	No	NONE - PLUGGED
50	1	50-001-OPN-12	RLW	1FD13	123A	OFFICE			NO FLOW	No	NONE - PLUGGED
50	1	50-001-OPN-12	RLW	1SD06	116	PROCESS PLANT			5 DAYS A WEEK	No	LAB SINK
50	1	50-001-OPN-12	RLW	1SD07	123	CHEMISTY LAB			5 DAYS A WEEK	No	FUME HOOD SINK
50	1	50-001-OPN-12	RLW	1SD08	123	CHEMISTY LAB			5 DAYS A WEEK	No	LAB SINK
50	1	50-001-OPN-12	RLW	1SD09	123A	OFFICE			5 DAYS A WEEK	No	LAB SINK
50	1	50-001-OPN-12	RLW	1SD10	123A	OFFICE			5 DAYS A WEEK	No	LAB SINK
50	1	50-001-OPN-12	RLW	1SD11	124	CHEMISTRY LAB			5 DAYS A WEEK	No	LAB SINK
50	1	50-001-OPN-12	RLW	1SD12	130	RAD. CHEMISTRY LAB			5 DAYS A WEEK	No	LAB SINK
50	1	50-001-OPN-12	RLW	1SD13	130	RAD. CHEMISTRY LAB			5 DAYS A WEEK	No	LAB SINK
50	1	50-001-OPN-12	RLW	1SD14	130	RAD. CHEMISTRY LAB			5 DAYS A WEEK	No	LAB SINK
50	1	50-001-OPN-12	RLW	1SD15	131	RAD. CHEMISTRY LAB			5 DAYS A WEEK	No	LAB SINK
50	1	50-001-OPN-12	RLW	1SD16	131	RAD. CHEMISTRY LAB			5 DAYS A WEEK	No	LAB SINK
50	1	50-001-OPN-12	RLW	1SD17	131	RAD. CHEMISTRY LAB			5 DAYS A WEEK	No	LAB SINK
50	1	50-001-OPN-12	RLW	1WF2	N/A	CORRIDOR			5 DAYS A WEEK	No	WATER FOUNTAIN
50	1	50-001-OPN-12	RLW	BCD01	10	CHEMISTRY LAB			5 DAYS A WEEK	No	LAB CUP DRAIN
50	1	50-001-OPN-12	RLW	BCD02	10	CHEMISTRY LAB			5 DAYS A WEEK	No	LAB CUP DRAIN
50	1	50-001-OPN-12	RLW	BCD03	10	CHEMISTRY LAB			5 DAYS A WEEK	No	FUME HOOD CUP DRAIN
50	1	50-001-OPN-12	RLW	BCD04	24	HAZARD. WASTE PLANT			5 DAYS A WEEK	No	LAB CUP DRAIN
50	1	50-001-OPN-12	RLW	BCD05	24	HAZARD. WASTE PLANT			5 DAYS A WEEK	No	LAB CUP DRAIN
50	1	50-001-OPN-12	RLW	BCD06	34	CHEMISTRY LAB			5 DAYS A WEEK	No	FUME HOOD CUP DRAIN

REPORT # 72

TA	BLDG	OUTLET PIPING NO	EPA OUTFALL #	DRAIN #	ROOM #	ROOM DESCRIPTION	FLOW RATE		PERIODICITY	SEASONAL	SOURCE TYPES
50	1	50-001-OPN-12	RLW	BCD12	34	CHEMISTRY LAB			5 DAYS A WEEK	No	FUME HOOD CUP DRAIN
50	1	50-001-OPN-12	RLW	BDW1	10	CHEMISTRY LAB			5 DAYS A WEEK	No	DISHWASHER
50	1	50-001-OPN-12	RLW	BDW2	35	DECONTAMINATION LAB			5 DAYS A WEEK	No	DISHWASHER
50	1	50-001-OPN-12	RLW	BED1	10	CHEMISTRY LAB			5 DAYS A WEEK	No	FUME HOOD WASH DOWN
50	1	50-001-OPN-12	RLW	BFD10	16	PROCESS PLANT			NO FLOW	No	NONE - PLUGGED
50	1	50-001-OPN-12	RLW	BFD28	24	HAZARD. WASTE PLANT			FLOW IS NIL	No	REACTOR VESSELS
50	1	50-001-OPN-12	RLW	BFD29	24	HAZARD. WASTE PLANT			NO FLOW	No	NONE - PLUGGED
50	1	50-001-OPN-12	RLW	BFD30	25	OFFICE			NO FLOW	No	NONE - PLUGGED
50	1	50-001-OPN-12	RLW	BFD32	35	DECONTAMINATION LAB			NO FLOW	No	NONE - PLUGGED
50	1	50-001-OPN-12	RLW	BFD33	35	DECONTAMINATION LAB			NO FLOW	No	NONE - PLUGGED
50	1	50-001-OPN-12	RLW	BSD01	7JC	JANITORS CLOSET			5 DAYS A WEEK	No	MOP WATER
50	1	50-001-OPN-12	RLW	BSD02	5	INSTRUMENT LAB			5 DAYS A WEEK	No	LAB SINK
50	1	50-001-OPN-12	RLW	BSD03	3	ELECTRONICS LAB			NO FLOW	No	NONE - REMOVED
50	1	50-001-OPN-12	RLW	BSD04	3	ELECTRONICS LAB			NO FLOW	No	NONE - REMOVED
50	1	50-001-OPN-12	RLW	BSD05	10	CHEMISTRY LAB			5 DAYS A WEEK	No	LAB SINK
50	1	50-001-OPN-12	RLW	BSD06	10	CHEMISTRY LAB			5 DAYS A WEEK	No	LAB SINK
50	1	50-001-OPN-12	RLW	BSD07	10	CHEMISTRY LAB			5 DAYS A WEEK	No	LAB SINK
50	1	50-001-OPN-12	RLW	BSD08	10	CHEMISTRY LAB			5 DAYS A WEEK	No	FUME HOOD SINK
50	1	50-001-OPN-12	RLW	BSD09	1	CHEM LAB			5 DAYS A WEEK	No	LAB SINK
50	1	50-001-OPN-12	RLW	BSD10	1	CHEM LAB			5 DAYS A WEEK	No	LAB SINK
50	1	50-001-OPN-12	RLW	BSD11	1	CHEM LAB			5 DAYS A WEEK	No	LAB SINK
50	1	50-001-OPN-12	RLW	BSD13	N/A	CORRIDOR			5 DAYS A WEEK	No	MOP WATER
50	1	50-001-OPN-12	RLW	BSD14	24	HAZARD. WASTE PLANT			5 DAYS A WEEK	No	LAB SINK
50	1	50-001-OPN-12	RLW	BSD15	34	CHEMISTRY LAB			5 DAYS A WEEK	No	FUME HOOD SINK
50	1	50-001-OPN-12	RLW	BSD16	34	CHEMISTRY LAB			5 DAYS A WEEK	No	FUME HOOD SINK
50	1	50-001-OPN-12	RLW	BSD17	35	DECONTAMINATION LAB			5 DAYS A WEEK	No	FUME HOOD SINK
50	1	50-001-OPN-12	RLW	BSD18	35	DECONTAMINATION LAB			5 DAYS A WEEK	No	FUME HOOD SINK
50	1	50-001-OPN-12	RLW	BSD19	35	DECONTAMINATION LAB			5 DAYS A WEEK	No	FUME HOOD SINK
50	1	50-001-OPN-12	RLW	BSD20	35	DECONTAMINATION LAB			5 DAYS A WEEK	No	FUME HOOD SINK
50	1	50-001-OPN-12	RLW	BWF1	7	CORRIDOR			5 DAYS A WEEK	No	WATER FOUNTAIN
50	1	50-001-OPN-13	RLW	1FD03	116	PROCESS PLANT			FLOW IS NIL	No	FLOOR WASHINGS
50	1	50-001-OPN-13	RLW	1FD04	116	PROCESS PLANT			FLOW IS NIL	No	FLOOR WASHINGS
50	1	50-001-OPN-13	RLW	1FD05	116	PROCESS PLANT			FLOW IS NIL	No	FLOOR WASHINGS

REPORT # 72

TA	BLDG	OUTLET PIPING NO	EPA OUTFALL #	DRAIN #	ROOM #	ROOM DESCRIPTION	FLOW RATE		PERIODICITY	SEASONAL	SOURCE TYPES
50	1	50-001-OPN-13	RLW	1FD06	116A	OFFICE			NO FLOW	No	NONE - PLUGGED
50	1	50-001-OPN-13	RLW	1FD07	116	PROCESS PLANT			NO FLOW	No	NONE - PLUGGED
50	1	50-001-OPN-13	RLW	1FD08	116B	VACUUM FILTER ROOM			FLOW IS NIL	No	FLOOR WASHINGS
50	1	50-001-OPN-13	RLW	1FD09	116B	VACUUM FILTER ROOM			FLOW IS NIL	No	FLOOR WASHINGS
50	1	50-001-OPN-13	RLW	1FD10	116B	VACUUM FILTER ROOM			FLOW IS NIL	No	VACUUM SEAL TANK DRAINS (2)
50	1	50-001-OPN-13	RLW	1FD11	116B	VACUUM FILTER ROOM			FLOW IS NIL	No	FLOOR WASHINGS
50	1	50-001-OPN-13	RLW	BAD2	EXT.	CONTAINMENT BERM			FLOW IS NIL	No	CAUSTIC TANK FILL
50	1	50-001-OPN-13	RLW	BAD2	EXT.	CONTAINMENT BERM			FLOW IS NIL	No	POTABLE WATER (2)
50	1	50-001-OPN-13	RLW	BAD2	EXT.	CONTAINMENT BERM			FLOW IS NIL	No	CAUSTIC TANK OVERFLOW
50	1	50-001-OPN-13	RLW	BFD11	16	PROCESS PLANT			FLOW IS NIL	No	FLOOR WASHINGS
50	1	50-001-OPN-13	RLW	BFD12	16	PROCESS PLANT			FLOW IS NIL	No	PUMP GLAND SEAL
50	1	50-001-OPN-13	RLW	BFD12	16	PROCESS PLANT			FLOW IS NIL	No	AIR DRYERS (2)
50	1	50-001-OPN-13	RLW	BFD12	16	PROCESS PLANT			FLOW IS NIL	No	AIR COMPRESSOR DRAIN
50	1	50-001-OPN-13	RLW	BFD13	16	PROCESS PLANT			FLOW IS NIL	No	PUMP GLAND SEAL
50	1	50-001-OPN-13	RLW	BFD14	16	PROCESS PLANT			FLOW IS NIL	No	FLOOR WASHINGS
50	1	50-001-OPN-13	RLW	BFD15	16	PROCESS PLANT			FLOW IS NIL	No	ACID TANK OVERFLOW
50	1	50-001-OPN-13	RLW	BFD16	16	PROCESS PLANT			FLOW IS NIL	No	PUMP GLAND SEAL
50	1	50-001-OPN-13	RLW	BFD16	16	PROCESS PLANT			FLOW IS NIL	No	BFPs (2)
50	1	50-001-OPN-13	RLW	BFD17	63	PROCESS PLANT			FLOW IS NIL	No	FLOOR WASHINGS
50	1	50-001-OPN-13	RLW	BFD18	61	POLISHING TREATMENT			FLOW IS NIL	No	SAMPLE LINE
50	1	50-001-OPN-13	RLW	BFD19	61	POLISHING TREATMENT			NO FLOW	No	NONE - PLUGGED
50	1	50-001-OPN-13	RLW	BFD20	61	POLISHING TREATMENT			FLOW IS NIL	No	FLOOR WASHINGS
50	1	50-001-OPN-13	RLW	BFD21	60A	PRE-TREATMENT			FLOW IS NIL	No	FLOOR WASHINGS
50	1	50-001-OPN-13	RLW	BFD22	60A	PRE-TREATMENT			FLOW IS NIL	No	FLOOR WASHINGS
50	1	50-001-OPN-13	RLW	BFD23	60	PRE-TREATMENT			FLOW IS NIL	No	FLOOR WASHINGS
50	1	50-001-OPN-13	RLW	BSP2	60	PRE-TREATMENT			5 DAYS A WEEK	No	FLOOR DRAINS (6)
50	1	50-001-OPN-14	RLW	N/A	16	RAD WASTE LINE			5 DAYS A WEEK	No	ACID TANK TO BLDG. 2
50	1	50-001-OPN-15	RLW	BFD24	70	FEED TANK			FLOW IS NIL	No	NUETRALIZATION ACID FROM TANK
50	1	50-001-OPN-15	RLW	BFD24	70	FEED TANK			FLOW IS NIL	No	EMERGENCY SHOWER
50	1	50-001-OPN-15	RLW	BFD25	70A	FEED TANK			FLOW IS NIL	No	FLOOR WASHINGS
50	1	50-001-OPN-15	RLW	BFD26	72A	FILTER ROOM			FLOW IS NIL	No	FLOOR WASHINGS
50	1	50-001-OPN-15	RLW	BSP1	70A	FEED TANK			5 DAYS A WEEK	No	FLOOR DRAINS (3)
50	1	50-001-OPN-16	ATMOSPHERE	N/A	72	NATURAL GAS VENT			NO FLOW	No	NONE

REPORT # 72

TA	BLDG	OUTLET PIPING NO	EPA OUTFALL #	DRAIN #	ROOM #	ROOM DESCRIPTION	FLOW RATE		PERIODICITY	SEASONAL	SOURCE TYPES
50	1	50-001-OPN-17	ATMOSPHERE	N/A	72	NATURAL GAS VENT			NO FLOW	No	NONE
50	1	50-001-OPN-18	ATMOSPHERE	N/A	72A	NATURAL GAS VENT			NO FLOW	No	NONE
50	1	50-001-OPN-19	ATMOSPHERE	N/A	10	NATURAL GAS VENT			NO FLOW	No	NONE
50	1	50-001-OPN-20	ATMOSPHERE	N/A	10	NATURAL GAS VENT			NO FLOW	No	NONE
50	1	50-001-OPN-21	ATMOSPHERE	N/A	57	NATURAL GAS VENT			NO FLOW	No	NONE
50	1	50-001-OPN-22	ATMOSPHERE	N/A	57	NATURAL GAS VENT			NO FLOW	No	NONE
50	1	50-001-OPN-23	DAYLIGHT	N/A	57	FIRE SYSTEM DRAIN			ANNUAL TESTING	No	FIRE DRAIN
50	1	50-001-OPN-24	DAYLIGHT	N/A	59	FIRE SYSTEM DRAIN			ANNUAL TESTING	No	FIRE DRAIN
50	1	50-001-OPN-25	DAYLIGHT	N/A	63	FIRE SYSTEM DRAIN			ANNUAL TESTING	No	FIRE DRAIN
50	1	50-001-OPN-26	DAYLIGHT	N/A	63	FIRE SYSTEM DRAIN			ANNUAL TESTING	No	FIRE DRAIN
50	1	50-001-OPN-27	DAYLIGHT	N/A	63	FIRE SYSTEM DRAIN			ANNUAL TESTING	No	FIRE DRAIN
50	1	50-001-OPN-28	DAYLIGHT	N/A	131	FIRE SYSTEM DRAIN			ANNUAL TESTING	No	FIRE DRAIN
50	1	50-001-OPN-29	DAYLIGHT	N/A	7A	WATER HEATER PRV			FLOW IS NIL	No	WATER HEATER PRV
50	1	50-001-OPN-30	DAYLIGHT	N/A	7B	WATER HEATER PRV			FLOW IS NIL	No	WATER HEATER PRV
50	1	50-001-OPN-31	DAYLIGHT	N/A	N/A	CHILLED WATER			FLOW IS NIL	No	CHILLED WATER
50	1	50-001-OPN-32	DAYLIGHT	N/A	N/A	CHILLED WATER			FLOW IS NIL	No	CHILLED WATER
50	1	50-001-OPN-33	DAYLIGHT	N/A	EXT.	STACK DRAIN			FLOW IS NIL	No	STACK DRAIN
50	1	50-001-OPN-34	DAYLIGHT	N/A	EXT.	STACK DRAIN			FLOW IS NIL	No	STACK DRAIN
50	1	50-001-OPN-35	DAYLIGHT	N/A	EXT.	STACK DRAIN			FLOW IS NIL	No	STACK DRAIN
50	1	50-001-OPN-36	N/A	N/A	16	COMP. AIR CONNECT.			NO FLOW	No	NONE
50	1	50-001-OPN-37	RLW VIA BAD2	N/A	16	POTABLE WATER DRAIN			FLOW IS NIL	No	NON POTABLE WATER
50	1	50-001-OPN-38	RLW VIA BAD2	N/A	16	POTABLE WATER DRAIN			FLOW IS NIL	No	NON-POTABLE WATER
50	1	50-001-OPN-39	RLW VIA BAD2	N/A	16	CAUSTIC TANK FILL LINE			FLOW IS NIL	No	CAUSTIC TANK
50	1	50-001-OPN-40	RLW VIA BAD2	N/A	16	CAUSTIC TANK OVERFLOW			FLOW IS NIL	No	CAUSTIC TANK
50	1	50-001-OPN-41	DAYLIGHT	N/A	16	NITROGEN TANK FILL LINE			FLOW IS NIL	No	NITROGEN TANK
50	1	50-001-OPN-42	DAYLIGHT	N/A	57	BACK FLOW PREVENTER			FLOW IS NIL	No	INDUSTRIAL WATER
50	1	50-001-OPN-43	ATMOSPHERE	N/A	N/A	ACID TANK VENT			NO FLOW	No	NONE
50	1	50-001-OPN-44	N/A	N/A	N/A	SAMPLE LINE			5 DAYS A WEEK	No	RLW DISCHARGE
50	1	50-001-OPN-45	N/A	N/A	N/A	ELECT. CONDUIT			NO FLOW	No	NONE
50	1	50-001-OPN-46	ATMOSPHERE	N/A	131	DISHWASHER VENT			NO FLOW	No	NONE
50	1	50-001-OPN-47	ATMOSPHERE	N/A	130	DISHWASHER VENT			NO FLOW	No	NONE
50	1	50-001-OPN-48	ATMOSPHERE	N/A	24	REACTOR VESSEL VENT			NO FLOW	No	NONE
50	1	50-001-OPN-49	ATMOSPHERE	N/A	N/A	BOTTLED GAS VENT			NO FLOW	No	NONE

REPORT # 72

TA	BLDG	OUTLET PIPING NO	EPA OUTFALL #	DRAIN #	ROOM #	ROOM DESCRIPTION	FLOW RATE		PERIODICITY	SEASONAL	SOURCE TYPES
50	1	50-001-OPN-50	ATMOSPHERE	N/A	116B	VACUUM PUMP EXHAUST			NO FLOW	No	NONE
50	1	50-001-OPN-51	DAYLIGHT	RD01	N/A	ROOF			MOSTLY SUMMER	Yes	STORM WATER
50	1	50-001-OPN-51	DAYLIGHT	RD02	N/A	ROOF			MOSTLY SUMMER	Yes	STORM WATER
50	1	50-001-OPN-52	DAYLIGHT	PFD1	216A	PENTHOUSE EQUIP. ROOM			FLOW IS NIL	No	DISTILLED WATER TANK
50	1	50-001-OPN-52	DAYLIGHT	PFD2	216	PENTHOUSE			FLOW IS NIL	No	FLOOR WASHINGS
50	1	50-001-OPN-52	DAYLIGHT	RD03	N/A	ROOF			MOSTLY SUMMER	Yes	STORM WATER
50	1	50-001-OPN-52	DAYLIGHT	RD04	N/A	ROOF			MOSTLY SUMMER	Yes	STORM WATER
50	1	50-001-OPN-52	DAYLIGHT	RD05	N/A	ROOF			MOSTLY SUMMER	Yes	STORM WATER
50	1	50-001-OPN-52	DAYLIGHT	RD06	N/A	ROOF			MOSTLY SUMMER	Yes	STORM WATER
50	1	50-001-OPN-52	DAYLIGHT	RD07	N/A	ROOF			MOSTLY SUMMER	Yes	STORM WATER
50	1	50-001-OPN-52	DAYLIGHT	RD08	N/A	ROOF			MOSTLY SUMMER	Yes	STORM WATER
50	1	50-001-OPN-52	DAYLIGHT	RD09	N/A	ROOF			MOSTLY SUMMER	Yes	STORM WATER
50	1	50-001-OPN-52	DAYLIGHT	RD10	N/A	ROOF			MOSTLY SUMMER	Yes	STORM WATER
50	1	50-001-OPN-53	DAYLIGHT	RD19	N/A	ROOF			MOSTLY SUMMER	Yes	STORM WATER
50	1	50-001-OPN-53	DAYLIGHT	RD20	N/A	ROOF			MOSTLY SUMMER	Yes	STORM WATER
50	1	50-001-OPN-53	DAYLIGHT	RD21	N/A	ROOF			MOSTLY SUMMER	Yes	STORM WATER
50	1	50-001-OPN-53	DAYLIGHT	RD22	N/A	ROOF			MOSTLY SUMMER	Yes	STORM WATER
50	1	50-001-OPN-54	DAYLIGHT	RD17	N/A	ROOF			MOSTLY SUMMER	Yes	STORM WATER
50	1	50-001-OPN-54	DAYLIGHT	RD18	N/A	ROOF			MOSTLY SUMMER	Yes	STORM WATER
50	1	50-001-OPN-55	DAYLIGHT	RD13	N/A	ROOF			MOSTLY SUMMER	Yes	STORM WATER
50	1	50-001-OPN-55	DAYLIGHT	RD14	N/A	ROOF			MOSTLY SUMMER	Yes	STORM WATER
50	1	50-001-OPN-55	DAYLIGHT	RD16	N/A	ROOF			MOSTLY SUMMER	Yes	STORM WATER
50	1	50-001-OPN-56	DAYLIGHT	RD11	N/A	ROOF			MOSTLY SUMMER	Yes	STORM WATER
50	1	50-001-OPN-56	DAYLIGHT	RD12	N/A	ROOF			MOSTLY SUMMER	Yes	STORM WATER
50	1	50-001-OPN-57	DAYLIGHT	RD15	N/A	ROOF			MOSTLY SUMMER	Yes	STORM WATER
50	1	50-001-OPN-58	DAYLIGHT	N/A	N/A	DOWNSPOUT			MOSTLY SUMMER	Yes	STORM WATER
50	1	50-001-OPN-59	DAYLIGHT	N/A	N/A	DOWNSPOUT			MOSTLY SUMMER	Yes	STORM WATER
50	1	50-001-OPN-60	DAYLIGHT	N/A	N/A	DOWNSPOUT			MOSTLY SUMMER	Yes	STORM WATER
50	1	50-001-OPN-61	DAYLIGHT	N/A	N/A	DOWNSPOUT			MOSTLY SUMMER	Yes	STORM WATER
50	1	50-001-OPN-62	DAYLIGHT	N/A	N/A	DOWNSPOUT			MOSTLY SUMMER	Yes	STORM WATER
50	1	50-001-OPN-63	DAYLIGHT	N/A	N/A	DOWNSPOUT			MOSTLY SUMMER	Yes	STORM WATER
50	1	50-001-OPN-64	DAYLIGHT	N/A	N/A	DOWNSPOUT			MOSTLY SUMMER	Yes	STORM WATER
50	1	50-001-OPN-65	DAYLIGHT	N/A	N/A	DOWNSPOUT			MOSTLY SUMMER	Yes	STORM WATER

REPORT # 72

TA	BLDG	OUTLET PIPING NO	EPA OUTFALL #	DRAIN #	ROOM #	ROOM DESCRIPTION	FLOW RATE		PERIODICITY	SEASONAL	SOURCE TYPES
50	1	50-001-OFN-66	DAYLIGHT	N/A	N/A	DOWNSPOUT			MOSTLY SUMMER	Yes	STORM WATER
50	1	50-001-OPN 67	DAYLIGHT	N/A	N/A	DOWNSPOUT			MOSTLY SUMMER	Yes	STORM WATER
50	1	50-001-OPN 68	DAYLIGHT	N/A	N/A	DOWNSPOUT			MOSTLY SUMMER	Yes	STORM WATER
50	2	50-002-OFN-1	RLW	1FD1	N/A	VESTIBULE			FLOW IS N'L	No	FLOOR WASWHINGS
50	2	50-002-OPN-1	RLW	1FD2	1	PUMP ROOM			FLOW IS N'L	No	AIR COMPRESSOR DRAIN
50	2	50-002-OFN-1	RLW	1FD3	1	PUMP ROOM			FLOW IS N'L	No	STORM WATER WEEPAGE
50	2	50-002-OFN-1	RLW	1SP1	1	PUMP ROOM			5 DAYS A WEEK	No	FLOOR DRAINS (3)
50	2	50-002-OPN-2	051051	N/A	N/A	BLDG 2	14615	GPD	5 DAYS A WEEK	No	FINAL HOLDING TANKS
50	2	NON DRAIN	N/A	N/A	N/A	50-2 HOLDING TANKS			NO FLOW	No	NONE
50	2	NON DRAIN	N/A	N/A	N/A	50-2 HOLDING TANKS			NO FLOW	No	NONE
50	4	50-004 OPN-1	DAYLIGHT	N/A	N/A	TRANSFORMER			NO FLOW	No	TRANSFORMER OIL
50	5	50-005-OFN-1	DAYLIGHT	N/A	N/A	NITRIC ACID TANK			NO FLOW	No	NITRIC ACID TANK FILL
50	5	50-005-OPN-2	DAYLIGHT	N/A	N/A	NITRIC ACID TANK			NO FLOW	No	NITRIC ACID TANK OVERFLOW
50	37	50-037-OPN 01	13S/SWSC	1LV1	16	RESTROOM			5 DAYS A WEEK	No	HAND WASHINGS
50	37	50-037-OPN-01	13S/SWSC	1LV2	14	RESTROOM			5 DAYS A WEEK	No	HAND WASHINGS
50	37	50-037-OFN 01	13S/SWSC	1SD1	12	JANITOR'S CLOSET			5 DAYS A WEEK	No	MOP WATER
50	37	50-037-OPN 01	13S/SWSC	1TL1	16	RESTROOM			5 DAYS A WEEK	No	TOILET
50	37	50-037-OFN 01	13S/SWSC	1TL2	14	RESTROOM			5 DAYS A WEEK	No	TOILET
50	37	50-037-OFN 01	13S/SWSC	1UR1	16	RESTROOM			5 DAYS A WEEK	No	URINAL
50	37	50-037-OFN 01	13S/SWSC	1WF1	N/A	CORRIDOR			5 DAYS A WEEK	No	WATER FOUNTAIN
50	37	50-037-OFN 01	13S/SWSC	2WF1	21	OFFICE			5 DAYS A WEEK	No	WATER FOUNTAIN
50	37	50-037-OPN-02	13S/SWSC	1FD01	111	EQUIPMENT ROOM			FLOW IS N'L	No	AIR DRYER DRAIN
50	37	50-037-OFN 02	13S/SWSC	1FD01	111	EQUIPMENT ROOM			FLOW IS N'L	No	DISTILLER DRAIN
50	37	50-037-OPN-02	13S/SWSC	1FD01	111	EQUIPMENT ROOM			FLOW IS N'L	No	AIR COMPRESSOR DRAIN
50	37	50-037-OFN 02	13S/SWSC	1FD02	111	EQUIPMENT ROOM			NOT FOUND	No	NOT FOUND
50	37	50-037-OPN-02	13S/SWSC	1FD03	111	EQUIPMENT ROOM			NOT FOUND	No	NOT FOUND
50	37	50-037-OFN-02	13S/SWSC	1FD04	111	EQUIPMENT ROOM			FLOW IS N'L	No	AIR DRYER DRAIN
50	37	50-037-OPN-02	13S/SWSC	1FD04	111	EQUIPMENT ROOM			FLOW IS N'L	No	HOT WATER DRAIN (2)
50	37	50-037-OPN-02	13S/SWSC	1FD04	111	EQUIPMENT ROOM			FLOW IS N'L	No	AIR COMPRESSOR DRAIN
50	37	50-037-OPN-02	13S/SWSC	1FD04	111	EQUIPMENT ROOM			FLOW IS N'L	No	EXPANSION TANK DRAIN
50	37	50-037-OPN 02	13S/SWSC	1FD04	111	EQUIPMENT ROOM			FLOW IS N'L	No	HOT WATER PRV
50	37	50-037-OPN-02	13S/SWSC	1FD04	111	EQUIPMENT ROOM			FLOW IS N'L	No	BOILER DRAIN
50	37	50-037-OPN-02	13S/SWSC	1FD05	111	EQUIPMENT ROOM			FLOW IS N'L	No	COLD WATER DRAIN

REPORT # 72

TA	BLDG	OUTLET PIPING NO	EPA OUTFALL #	DRAIN #	ROOM #	ROOM DESCRIPTION	FLOW RATE		PERIODICITY	SEASONAL	SOURCE TYPES
50	37	50-037-OPN-02	13S/SWSC	1FD05	111	EQUIPMENT ROOM			FLOW IS NIL	No	FIRE SPRINKLER DRAIN
50	37	50-037-OPN-02	13S/SWSC	1FD05	111	EQUIPMENT ROOM			FLOW IS NIL	No	FIRE SPRINKLER BFP
50	37	50-037-OPN-02	13S/SWSC	1FD05	111	EQUIPMENT ROOM			FLOW IS NIL	No	FIRE DRAIN
50	37	50-037-OPN 02	13S/SWSC	1FD05	111	EQUIPMENT ROOM			FLOW IS NIL	No	COLD WATER BFP
50	37	50-037-OPN-02	13S/SWSC	1FD06	111	EQUIPMENT ROOM			FLOW IS NIL	No	WATER HEATER PRV (2)
50	37	50-037-OPN-02	13S/SWSC	1FD06	111	EQUIPMENT ROOM			FLOW IS NIL	No	BOILER PRV
50	37	50-037-OPN-02	13S/SWSC	1FD06	111	EQUIPMENT ROOM			FLOW IS NIL	No	BOILER DRAIN
50	37	50-037-OPN-02	13S/SWSC	1FD06	111	EQUIPMENT ROOM			FLOW IS NIL	No	PROCESS COOLING STRAINER
50	37	50-037-OPN-02	13S/SWSC	1FD07	104	RESTROOM			5 DAYS A WEEK	No	FLOOR WASHINGS
50	37	50-037-OPN-02	13S/SWSC	1FD08	103	RESTROOM			5 DAYS A WEEK	No	FLOOR WASHINGS
50	37	50-037-OPN-02	13S/SWSC	1LV3	104	RESTROOM			5 DAYS A WEEK	No	HAND WASHINGS
50	37	50-037-OPN-02	13S/SWSC	1LV4	103	RESTROOM			5 DAYS A WEEK	No	HAND WASHINGS
50	37	50-037-OPN-02	13S/SWSC	1SH1	104	RESTROOM			5 DAYS A WEEK	No	SHOWER
50	37	50-037-OPN-02	13S/SWSC	1SH2	103	RESTROOM			5 DAYS A WEEK	No	SHOWER
50	37	50-037-OPN-02	13S/SWSC	1TL3	104	RESTROOM			5 DAYS A WEEK	No	TOILET
50	37	50-037-OPN-02	13S/SWSC	1TL4	103	RESTROOM			5 DAYS A WEEK	No	TOILET
50	37	50-037-OPN-02	13S/SWSC	1UR2	103	RESTROOM			5 DAYS A WEEK	No	URINAL
50	37	50-037-OPN-02	13S/SWSC	1WF2	106	CORRIDOR			5 DAYS A WEEK	No	WATER FOUNTAIN
50	37	50-037-OPN-02	13S/SWSC	2FD07	206	RESTROOM			5 DAYS A WEEK	No	FLOOR WASHINGS
50	37	50-037-OPN-02	13S/SWSC	2FD08	208	RESTROOM			5 DAYS A WEEK	No	FLOOR WASHINGS
50	37	50-037-OPN-02	13S/SWSC	2LV1	206	RESTROOM			5 DAYS A WEEK	No	HAND WASHINGS
50	37	50-037-OPN-02	13S/SWSC	2LV2	208	RESTROOM			5 DAYS A WEEK	No	HAND WASHINGS
50	37	50-037-OPN-02	13S/SWSC	2LV3	208	RESTROOM			5 DAYS A WEEK	No	HAND WASHINGS
50	37	50-037-OPN-02	13S/SWSC	2SD2	208	JANIROR CLOSET			5 DAYS A WEEK	No	MOP WATER
50	37	50-037-OPN 02	13S/SWSC	2TL1	206	RESTROOM			5 DAYS A WEEK	No	TOILET
50	37	50-037-OPN-02	13S/SWSC	2TL2	208	RESTROOM			5 DAYS A WEEK	No	TOILET
50	37	50-037-OPN-02	13S/SWSC	2TL3	208	RESTROOM			5 DAYS A WEEK	No	TOILET
50	37	50-037-OPN-02	13S/SWSC	2UR1	208	RESTROOM			5 DAYS A WEEK	No	URINAL
50	37	50-037-OPN-02	13S/SWSC	2UR2	208	RESTROOM			5 DAYS A WEEK	No	URINAL
50	37	50-037-OPN-02	13S/SWSC	2WF2	21	CORRIDOR			5 DAYS A WEEK	No	WATER FOUNTAIN
50	37	50-037-OPN-03	RLW	1FD09	107	HOT CHEMISTRY LAB			FLOW IS NIL	No	FLOOR WASHINGS
50	37	50-037-OPN-03	RLW	1FD10	108	CONTROL ROOM			NO FLOW	No	NONE - PLUGGED
50	37	50-037-OPN-03	RLW	1FD11	112	CONTROL. AIR INCIN.			FLOW IS NIL	No	FLOOR WASHINGS

REPORT # 72

TA	BLDG	OUTLET PIPING NO	EPA OUTFALL #	DRAIN #	ROOM #	ROOM DESCRIPTION	FLOW RATE		PERIODICITY	SEASONAL	SOURCE TYPES
50	37	50-037-OPN 03	RLW	1FD12	112	CONTROL. AIR INCIN.			FLOW IS NIL	No	FLOOR WASHINGS
50	37	50-037-OPN 03	RLW	1FD13	110	HOT MACHINE SHOP			FLOW IS NIL	No	FLOOR WASHINGS
50	37	50-037-OPN 03	RLW	1FD14	113	CORRIDOR			NO FLOW	No	NONE
50	37	50-037-OPN-03	RLW	1FD15	112	CONTROL. AIR INCIN.			FLOW IS NIL	No	FLOOR WASHINGS
50	37	50-037-OPN-03	RLW	1FD16	112	CONTROL. AIR INCIN.			FLOW IS NIL	No	FLOOR WASHINGS
50	37	50-037-OPN-03	RLW	1FD17	112	CONTROL. AIR INCIN.			FLOW IS NIL	No	FLOOR WASHINGS
50	37	50-037 OPN 03	RLW	1FD18	112	CONTROL. AIR INCIN.			FLOW IS NIL	No	FLOOR WASHINGS
50	37	50-037-OPN 03	RLW	1FD19	112	CONTROL. AIR INCIN.			FLOW IS NIL	No	FLOOR WASHINGS
50	37	50-037-OPN 03	RLW	1FD20	112	CONTROL. AIR INCIN.			FLOW IS NIL	No	FLOOR WASHINGS
50	37	50-037-OPN-03	RLW	1IM1	113	CORRIDOR			7 DAYS A WEEK	No	ICE MAKER
50	37	50-037-OPN-03	RLW	1SD3	113	CORRIDOR			5 DAYS A WEEK	No	MOP WATER
50	37	50-037-OPN-03	RLW	1SD4	107	HOT CHEMISTRY LAB			5 DAYS A WEEK	No	LAB SINK
50	37	50-037-OPN 03	RLW	1SD5	107	HOT CHEMISTRY LAB			5 DAYS A WEEK	No	FUME HOOD SINK
50	37	50-037 OPN-03	RLW	1SD6	112	CONTROL. AIR INCIN.			5 DAYS A WEEK	No	MOP WATER
50	37	50-037-OPN-03	RLW	2FD01	205	OFFICE			NO FLOW	No	NONE - PLUGGED
50	37	50-037-OPN 03	RLW	2FD02	205	OFFICE			NO FLOW	No	NONE - PLUGGED
50	37	50-037-OPN 03	RLW	2FD03	204	CHEMISTRY ROOM			NO FLOW	No	NONE - PLUGGED
50	37	50-037-OPN 03	RLW	2FD04	204	CHEMISTRY ROOM			NO FLOW	No	NONE - PLUGGED
50	37	50-037-OPN-03	RLW	2FD05	203	ELECTRONICS LAB			NO FLOW	No	NONE - PLUGGED
50	37	50-037-OPN-03	RLW	2FD06	203	ELECTRONICS LAB			NO FLOW	No	NONE - PLUGGED
50	37	50-037-OPN-03	RLW	2FD09	209A	OFFICE			NO FLOW	No	NONE - PLUGGED
50	37	50-037-OPN-03	RLW	2FD10	209B	OFFICE			NO FLOW	No	NONE - PLUGGED
50	37	50-037-OPN-03	RLW	2FD11	209	BREAK ROOM			NO FLOW	No	NONE - PLUGGED
50	37	50-037-OPN-03	RLW	2FD12	209	BREAK ROOM			NO FLOW	No	NONE - PLUGGED
50	37	50-037-OPN-03	RLW	2SD1	209	BREAK ROOM			5 DAYS A WEEK	No	DISH WASHINGS
50	37	50-037-OPN-03	RLW	2SD3	204	CHEMISTRY ROOM			5 DAYS A WEEK	No	LAB SINK
50	37	50-037-OPN-03	RLW	2SD4	204	CHEMISTRY ROOM			5 DAYS A WEEK	No	FUME HOOD SINK
50	37	50-037-OPN 03	RLW	AD1	EXT.	AREA DRAIN			5 DAYS A WEEK	No	NON POTABLE WATER(2)
50	37	50-037-OPN-03	RLW	AD1	EXT.	AREA DRAIN			5 DAYS A WEEK	No	CAUSTIC TANK FILL
50	37	50-037-OPN-04	RLW	1FD21	116	EGRESS BAY			FLOW IS NIL	No	FLOOR WASHINGS
50	37	50-037-OPN-04	RLW	1FD22	114	HIGH BAY AREA			FLOW IS NIL	No	FLOOR WASHINGS
50	37	50-037-OPN 04	RLW	1FD23	114	HIGH BAY AREA			FLOW IS NIL	No	FLOOR WASHINGS
50	37	50-037-OPN-04	RLW	1FD24	114	HIGH BAY AREA			FLOW IS NIL	No	FLOOR WASHINGS

REPORT # 72

TA	BLDG	OUTLET PIPING NO	EPA OUTFALL #	DRAIN #	ROOM #	ROOM DESCRIPTION	FLOW RATE		PERIODICITY	SEASONAL	SOURCE TYPES
50	37	50-037-OPN-04	RLW	1FD25	114	HIGH BAY AREA			FLOW IS NIL	No	FLOOR WASHINGS
50	37	50-037-OPN-05	DAYLIGHT	N/A	111	FIRE SYSTEM DRAIN			ANNUAL TESTING	No	FIRE DRAIN
50	37	50-037-OPN-06	DAYLIGHT	N/A	111	FIRE SYSTEM DRAIN			ANNUAL TESTING	No	FIRE DRAIN
50	37	50-037-OPN-07	DAYLIGHT	N/A	111	FIRE SYSTEM DRAIN			ANNUAL TESTING	No	FIRE DRAIN
50	37	50-037-OPN-08	DAYLIGHT	N/A	116	FIRE SYSTEM DRAIN			ANNUAL TESTING	No	FIRE DRAIN
50	37	50-037-OPN-09	DAYLIGHT	N/A	114	FIRE SYSTEM DRAIN			ANNUAL TESTING	No	FIRE DRAIN
50	37	50-037-OPN-10	DAYLIGHT	N/A	114	FIRE SYSTEM DRAIN			ANNUAL TESTING	No	FIRE DRAIN
50	37	50-037-OPN-11	DAYLIGHT	N/A	114	FIRE SYSTEM DRAIN			ANNUAL TESTING	No	FIRE DRAIN
50	37	50-037-OPN-12	DAYLIGHT	N/A	118	FIRE SYSTEM DRAIN			ANNUAL TESTING	No	FIRE DRAIN
50	37	50-037-OPN-13	DAYLIGHT	N/A	12	FIRE SYSTEM DRAIN			ANNUAL TESTING	No	FIRE DRAIN
50	37	50-037-OPN-14	RLW	N/A	111	CAUSTIC TANK			NO FLOW	No	CAUSTIC TANK VENT
50	37	50-037-OPN-15	RLW	N/A	111	CAUSTIC TANK			NO FLOW	No	CAUSTIC TANK FILL
50	37	50-037-OPN-16	RLW	N/A	111	NON-POTABLE WATER			FLOW IS NIL	No	NON-POTABLE WATER
50	37	50-037-OPN-17	RLW	N/A	111	NON-POTABLE WATER			FLOW IS NIL	No	NON-POTABLE WATER
50	37	50-037-OPN-18	ATMOSPHERE	N/A	111	NATURAL GAS VENT			NO FLOW	No	NONE
50	37	50-037-OPN-19	ATMOSPHERE	N/A	112	NATURAL GAS VENT			NO FLOW	No	NONE
50	37	50-037-OPN-20	DAYLIGHT	N/A	EXT.	STACK DRAIN			NO FLOW	No	NONE
50	37	50-037-OPN-21	ATMOSPHERE	N/A	209	PLUMBING VENT			NO FLOW	No	NONE
50	37	50-037-OPN-22	ATMOSPHERE	N/A	112	GAS VENT			NO FLOW	No	NONE
50	37	50-037-OPN-23	ATMOSPHERE	N/A	112	GAS VENT			NO FLOW	No	NONE
50	37	50-037-OPN-24	ATMOSPHERE	N/A	112	GAS VENT			NO FLOW	No	NONE
50	37	50-037-OPN-25	ATMOSPHERE	N/A	112	GAS VENT			NO FLOW	No	NONE
50	37	50-037-OPN-26	ATMOSPHERE	N/A	112	GAS VENT			NO FLOW	No	NONE
50	37	50-037-OPN-27	ATMOSPHERE	N/A	112	GAS VENT			NO FLOW	No	NONE
50	37	50-037-OPN-28	ATMOSPHERE	N/A	112	GAS VENT			NO FLOW	No	NONE
50	37	50-037-OPN-29	ATMOSPHERE	N/A	112	GAS VENT			NO FLOW	No	NONE
50	37	50-037-OPN-30	DAYLIGHT	RD11	ROOF	ROOF DRAIN			MOSTLY SUMMER	Yes	STORM WATER
50	37	50-037-OPN-30	DAYLIGHT	RD12	ROOF	ROOF DRAIN			MOSTLY SUMMER	Yes	STORM WATER
50	37	50-037-OPN-31	DAYLIGHT	RD07	ROOF	ROOF DRAIN			MOSTLY SUMMER	Yes	STORM WATER
50	37	50-037-OPN-31	DAYLIGHT	RD08	ROOF	ROOF DRAIN			MOSTLY SUMMER	Yes	STORM WATER
50	37	50-037-OPN-31	DAYLIGHT	RD09	ROOF	ROOF DRAIN			MOSTLY SUMMER	Yes	STORM WATER
50	37	50-037-OPN-31	DAYLIGHT	RD10	ROOF	ROOF DRAIN			MOSTLY SUMMER	Yes	STORM WATER
50	37	50-037-OPN-32	DAYLIGHT	RD13	ROOF	ROOF DRAIN			MOSTLY SUMMER	Yes	STORM WATER

REPORT # 72

TA	BLDG	OUTLET PIPING NO	EPA OUTFALL #	DRAIN #	ROOM #	ROOM DESCRIPTION	FLOW RATE		PERIODICITY	SEASONAL	SOURCE TYPES
50	37	50-037-OPN-33	DAYLIGHT	RD14	ROOF	ROOF DRAIN			MOSTLY SUMMER	Yes	STORM WATER
50	37	50-037-OPN-34	DAYLIGHT	RD02	ROOF	ROOF DRAIN			MOSTLY SUMMER	Yes	STORM WATER
50	37	50-037-OPN-34	DAYLIGHT	RD03	ROOF	ROOF DRAIN			MOSTLY SUMMER	Yes	STORM WATER
50	37	50-037-OPN-35	DAYLIGHT	RD01	ROOF	ROOF DRAIN			MOSTLY SUMMER	Yes	STORM WATER
50	37	50-037-OPN-35	DAYLIGHT	RD04	ROOF	ROOF DRAIN			MOSTLY SUMMER	Yes	STORM WATER
50	37	50-037-OPN-36	DAYLIGHT	RD05	ROOF	ROOF DRAIN			MOSTLY SUMMER	Yes	STORM WATER
50	37	50-037-OPN-37	DAYLIGHT	RD06	ROOF	ROOF DRAIN			MOSTLY SUMMER	Yes	STORM WATER
50	37	50-037-OPN-38	DAYLIGHT	N/A	ROOF	DOWNSPOUT			MOSTLY SUMMER	Yes	STORM WATER
50	37	50-037-OPN-39	DAYLIGHT	N/A	ROOF	DOWNSPOUT			MOSTLY SUMMER	Yes	STORM WATER
50	37	50-037-OPN-40	DAYLIGHT	N/A	ROOF	DOWNSPOUT			MOSTLY SUMMER	Yes	STORM WATER
50	37	50-037-OPN-41	DAYLIGHT	N/A	ROOF	DOWNSPOUT			MOSTLY SUMMER	Yes	STORM WATER
50	37	CAPPED PIPE	N/A	1SP1	118	RAD WASTE STAGING			NO FLOW	No	NONE
50	37	CAPPED PIPE	N/A	1SP2	117	MIXED WASTE STAGING			NO FLOW	No	NONE
50	37	CAPPED PIPE	N/A	1SP3	117	MIXED WASTE STAGING			NO FLOW	No	NONE
50	38	N/A	ND	N/A	N/A	GUARD SHACK			NO DRAINS	No	NONE
50	42	50-042-OPN-1	N/A	N/A	N/A	CO2 TANK			NO FLOW	No	LIQUID FILL
50	42	50-042-OPN-2	ATMOSPHERE	N/A	N/A	CO2 TANK			NO FLOW	No	CO2 VENT
50	42	50-042-OPN-3	ATMOSPHERE	N/A	N/A	CO2 TANK			NO FLOW	No	CO2 VENT
50	48	50-048-OPN 01	13S/SWSC	N/A	N/A	COOLING TOWER			NO FLOW	No	SUMP OVERFLOW
50	48	50-048-OPN 02	DAYLIGHT	N/A	N/A	COOLING TOWER			NO FLOW	No	COOLING TOWER DRAIN
50	48	50-048-OPN-03	DAYLIGHT	N/A	N/A	COOLING TOWER			NO FLOW	No	COOLING TOWER DRAIN
50	48	50-048-OPN-04	DAYLIGHT	N/A	N/A	COOLING TOWER			NO FLOW	No	COOLING TOWER DRAIN
50	48	50-048-OPN-05	DAYLIGHT	N/A	N/A	COOLING TOWER			NO FLOW	No	CAPPED PIPE
50	48	50-048-OPN-06	DAYLIGHT	N/A	N/A	COOLING TOWER			NO FLOW	No	COOLING TOWER DRAIN
50	48	50-048-OPN-07	DAYLIGHT	N/A	N/A	COOLING TOWER			NO FLOW	No	COOLING TOWER DRAIN
50	48	50-048-OPN-08	DAYLIGHT	N/A	N/A	COOLING TOWER			NO FLOW	No	COOLING TOWER DRAIN
50	54	50-054-OPN-01	13S/SWSC	1FD1	N/A	RESTROOM			5 DAYS A WEEK	No	FLOOR WASHINGS
50	54	50-054-OPN 01	13S/SWSC	1FD1	N/A	RESTROOM			ANNUAL TESTING	No	FIRE DRAINS(2)
50	54	50-054-OPN-01	13S/SWSC	1FD1	N/A	RESTROOM			FLOW IS NIL	No	WATER HEATER PRV
50	54	50-054-OPN-01	13S/SWSC	1FD2	N/A	WAREHOUSE			FLOW IS NIL	No	EYE WASH
50	54	50-054-OPN-01	13S/SWSC	1FD3	N/A	WAREHOUSE			FLOW IS NIL	No	FLOOR WASHINGS
50	54	50-054-OPN-01	13S/SWSC	1LV1	N/A	RESTROOM			5 DAYS A WEEK	No	HAND WASHINGS
50	54	50-054-OPN-01	13S/SWSC	1SD1	N/A	WAREHOUSE			5 DAYS A WEEK	No	MOP WATER

REPORT # 72

TA	BLDG	OUTLET PIPING NO	EPA OUTFALL #	DRAIN #	ROOM #	ROOM DESCRIPTION	FLOW RATE		PERIODICITY	SEASONAL	SOURCE TYPES
50	54	50-054-OPN-01	13S/SWSC	1TL1	N/A	RESTROOM			5 DAYS A WEEK	No	TOILET
50	54	50-054-OPN-01	13S/SWSC	1WF1	N/A	WAREHOUSE			5 DAYS A WEEK	No	WATER FOUNTAIN
50	54	50-054-OPN-02	13S/SWSC	1FS1	N/A	WAREHOUSE			FLOW IS NIL	No	AIR COMPRESSOR DRAIN
50	54	50-054-OPN-02	13S/SWSC	1FS1	N/A	WAREHOUSE			ANNUAL TEST	No	FIRE DRAIN
50	54	50-054-OPN-03	DAYLIGHT	1ED1	N/A	WAREHOUSE			NO FLOW	No	NONE
50	54	50-054-OPN-04	DAYLIGHT	RD2	N/A	STORM DRAIN			MOSTLY SUMMER	Yes	STORM WATER
50	54	50-054-OPN-05	DAYLIGHT	RD3	N/A	STORM DRAIN			MOSTLY SUMMER	Yes	STORM WATER
50	54	50-054-OPN-06	DAYLIGHT	RD4	N/A	STORM DRAIN			MOSTLY SUMMER	Yes	STORM WATER
50	54	50-054-OPN-07	DAYLIGHT	RD1	N/A	STORM DRAIN			MOSTLY SUMMER	Yes	STORM WATER
50	54	50-054-OPN-08	DAYLIGHT	N/A	N/A	FIRE SYSTEM DRAIN			ANNUAL TESTING	No	FIRE DRAIN
50	54	50-054-OPN-09	DAYLIGHT	N/A	N/A	FIRE SYSTEM DRAIN			ANNUAL TESTING	No	FIRE DRAIN
50	54	50-054-OPN-10	DAYLIGHT	N/A	N/A	FIRE SYSTEM DRAIN			ANNUAL TESTING	No	FIRE DRAIN
50	54	50-054-OPN-11	DAYLIGHT	N/A	N/A	FIRE SYSTEM DRAIN			ANNUAL TESTING	No	FIRE DRAIN
50	54	50-054-OPN-12	ATMOSPHERE	N/A	N/A	NATURAL GAS VENT			NO FLOW	No	NONE
50	54	50-054-OPN-13	ATMOSPHERE	N/A	N/A	NATURAL GAS VENT			NO FLOW	No	NONE
50	69	50-069-OPN-01	13S/SWSC	1TL1	101B	RESTROOM			5 DAYS A WEEK	No	TOILET
50	69	50-069-OPN-01	13S/SWSC	1UR1	101B	RESTROOM			5 DAYS A WEEK	No	URINAL
50	69	50-069-OPN-01	13S/SWSC	1WF1	102	SIZE REDUCTION FACILITY			NO FLOW	No	NONE - REMOVED
50	69	50-069-OPN-02	RLW	1FD1	102	SIZE REDUCTION FACILITY			FLOW IS NIL	No	FLOOR WASHINGS
50	69	50-069-OPN-02	RLW	1FD2	102	SIZE REDUCTION FACILITY			FLOW IS NIL	No	FLOOR WASHINGS
50	69	50-069-OPN-02	RLW	1FD3	102	SIZE REDUCTION FACILITY			FLOW IS NIL	No	FLOOR WASHINGS
50	69	50-069-OPN-02	RLW	1FS1	102	SIZE REDUCTION FACILITY			5 DAYS A WEEK	No	MOP WATER
50	69	50-069-OPN-02	RLW	1LV1	101B	RESTROOM			5 DAYS A WEEK	No	HAND WASHINGS
50	69	50-069-OPN-02	RLW	1SH1	101A	SHOWER ROOM			5 DAYS A WEEK	No	SHOWER
50	69	50-069-OPN-03	RLW TANK	N/A	102	RLW TO STORAGE TANK			5 DAYS A WEEK	No	CUTTING ENCLOSURE WASHINGS
50	69	50-069-OPN-04	DAYLIGHT	N/A	102	FIRE SYSTEM DRAIN			ANNUAL TESTING	No	FIRE DRAIN
50	69	50-069-OPN-05	DAYLIGHT	N/A	102	FIRE SYSTEM DRAIN			ANNUAL TESTING	No	FIRE DRAIN
50	69	50-069-OPN-06	DAYLIGHT	N/A	102	FIRE SYSTEM DRAIN			ANNUAL TESTING	No	FIRE DRAIN
50	69	50-069-OPN-07	DAYLIGHT	N/A	102	FIRE SYSTEM DRAIN			ANNUAL TESTING	No	FIRE DRAIN
50	69	50-069-OPN-08	DAYLIGHT	RD1	ROOF	ROOF			MOSTLY SUMMER	Yes	STORM WATER
50	69	50-069-OPN-09	DAYLIGHT	RD2	ROOF	ROOF			MOSTLY SUMMER	Yes	STORM WATER
50	69	50-069-OPN-10	DAYLIGHT	RD3	ROOF	ROOF			MOSTLY SUMMER	Yes	STORM WATER
50	69	50-069-OPN-11	DAYLIGHT	RD4	ROOF	ROOF			MOSTLY SUMMER	Yes	STORM WATER

REPORT # 72

TA	BLDG	OUTLET PIPING NO	EPA OUTFALL #	DRAIN #	ROOM #	ROOM DESCRIPTION	FLOW RATE		PERIODICITY	SEASONAL	SOURCE TYPES
50	69	50-069-OPN-12	DAYLIGHT	RD5	ROOF	ROOF			MOSTLY SUMMER	Yes	STORM WATER
50	69	50-069-OPN-13	DAYLIGHT	RD6	ROOF	ROOF			MOSTLY SUMMER	Yes	STORM WATER
50	69	50-069-OPN-14	DAYLIGHT	N/A	ROOF	CANALE			MOSTLY SUMMER	Yes	STORM WATER
50	69	50-069-OPN-15	DAYLIGHT	N/A	ROOF	CANALE			MOSTLY SUMMER	Yes	STORM WATER
50	69	50-069-OPN-16	DAYLIGHT	N/A	ROOF	CANALE			MOSTLY SUMMER	Yes	STORM WATER
50	69	50-069-OPN-17	DAYLIGHT	N/A	ROOF	CANALE			MOSTLY SUMMER	Yes	STORM WATER
50	69	50-069-OPN-18	ATMOSPHERE	N/A	102	BREATHING AIR VENT			NO FLOW	No	NONE
50	69	50-069-OPN-19	ATMOSPHERE	N/A	102	BREATHING AIR PRV			NO FLOW	No	NONE
50	69	50-069-OPN-20	N/A	N/A	102	CAPPED STUB			NO FLOW	No	NONE
50	69	50-069-OPN-21	N/A	N/A	102	CAPPED STUB			NO FLOW	No	NONE
50	69	50-069-OPN-22	DAYLIGHT	N/A	EXT.	STACK DRAIN			NO FLOW	No	STACK DRAIN
50	69	50-069-OPN-23	DAYLIGHT	N/A	102	SIZE REDUCTION FACILITY			FLOW IS NIL	No	WATER HEATER PRV
50	69	50-069-OPN-24	DAYLIGHT	N/A	EXT.	SECONDARY CONTAIN			MOSTLY SUMMER	Yes	STORM WATER
50	69	50-069-OPN-25	ATMOSPHERE	N/A	EXT.	RAD STORAGE TANK VENT			NO FLOW	No	RAD STORAGE TANK
50	69	50-069-OPN-26	DAYLIGHT	N/A	102	SIZE REDUCTION FACILITY			NO FLOW	No	UNKNOWN
50	69	NON-DRAIN	N/A	N/A	N/A	RLW STORAGE TANK			NO FLOW	No	NONE
50	69	NON-DRAIN	N/A	N/A	N/A	RLW STORAGE TANK			NO FLOW	No	NONE
50	83	50-083-OPN-1	N/A	N/A	101	STORAGE			NO FLOW	No	CONDUIT STUB OUT
50	83	50-083-OPN-2	DECON TRAILER	N/A	101A	MACHINE SHOP			5 DAYS A WEEK	No	NON POTABLE WATER
50	84	50-084-OPN-01	13S/SWSC	1LV1	108	RESTROOM			5 DAYS A WEEK	No	HAND WASHINGS
50	84	50-084-OPN-01	13S/SWSC	1LV2	112	RESTROOM			5 DAYS A WEEK	No	HAND WASHINGS
50	84	50-084-OPN-01	13S/SWSC	1SD1	N/A	CORRIDOR			5 DAYS A WEEK	No	DISH WASHINGS
50	84	50-084-OPN-01	13S/SWSC	1SD2	110	JANITOR CLOSET			5 DAYS A WEEK	No	MOP WATER
50	84	50-084-OPN-01	13S/SWSC	1TL1	108	RESTROOM			5 DAYS A WEEK	No	TOILET
50	84	50-084-OPN-01	13S/SWSC	1TL2	112	RESTROOM			5 DAYS A WEEK	No	TOILET
50	84	50-084-OPN-02	DAYLIGHT	N/A	EXT.	EVAPORATIVE COOLER			FLOW IS NIL	Yes	EVAPORATIVE COOLER DRAIN
50	84	50-084-OPN-03	DAYLIGHT	N/A	N/A	STORM DOWNSPOUT			MOSTLY SUMMER	Yes	STORM WATER
50	84	50-084-OPN-04	DAYLIGHT	N/A	N/A	WATER HEATER PRV			FLOW IS NIL	No	WATER HEATER PRV
50	90	50-090-OPN-1	DAYLIGHT	N/A	N/A	RAD WASTE STOR. TANK			NO FLOW	No	TANK DRAIN
50	90	50-090-OPN-2	DAYLIGHT	N/A	N/A	RAD WASTE STOR. TANK			NO FLOW	No	TANK DRAIN
50	90	50-090-OPN-3	RLW	N/A	N/A	RAD WASTE STOR. TANK			NO FLOW	No	RAD WASTE
50	90	50-090-OPN-4	RLW	N/A	N/A	RAD WASTE STOR. TANK			NO FLOW	No	RAD WASTE
50	94	N/A	ND	N/A	N/A	OFFICE TRAILER			NO DRAINS	No	NONE

REPORT # 72

TA	BLDG	OUTLET PIPING NO	EPA OUTFALL #	DRAIN #	ROOM #	ROOM DESCRIPTION	FLOW RATE		PERIODICITY	SEASONAL	SOURCE TYPES
50	105	N/A	ND	N/A	N/A	STORAGE SHED			NO DRAINS	No	NONE
50	106	N/A	ND	N/A	N/A	STORAGE SHED			NO DRAINS	No	NONE
50	107	50-107-OPN-1	DAYLIGHT	N/A	N/A	STACK DRAIN			NO FLOW	No	STACK DRAIN
50	114	N/A	ND	N/A	N/A	TRANSPORTAINER			NO DRAINS	No	NONE
50	117	N/A	ND	N/A	N/A	TRANSPORTAINER			NO DRAINS	No	NONE
50	118	N/A	ND	N/A	N/A	TRANSPORTAINER			NO DRAINS	No	NONE
50	119	N/A	ND	N/A	N/A	STORAGE SHED			NO DRAINS	No	NONE
50	125	N/A	ND	N/A	N/A	STORAGE SHED			NO DRAINS	No	NONE
50	135	N/A	ND	N/A	N/A	STORAGE SHED			NO DRAINS	No	NONE
50	148	N/A	ND	N/A	N/A	TRANSPORTAINER			NO DRAINS	No	NONE
50	160	N/A	ND	N/A	N/A	STORAGE SHED			NO DRAINS	No	NONE
50	183	50-183-OPN-1	NTAINMENT VA	N/A	N/A	TANK DRAIN			NO FLOW	No	FUEL STORAGE TANK
50	183	50-183-OPN-2	FUEL TANK	N/A	N/A	FUEL LINE TO DIESEL			CLOSED LOOP	No	FUEL STORAGE TANK
50	183	50-183-OPN-3	FUEL TANK	N/A	N/A	OVERFLOW FROM DIESEL			CLOSED LOOP	No	FUEL STORAGE TANK
50	183	50-183-OPN-4	ATMOSPHERE	N/A	N/A	TANK VENT			NO FLOW	No	FUEL STORAGE TANK
50	183	50-183-OPN-5	ATMOSPHERE	N/A	N/A	CONTAINMENT VENT			NO FLOW	No	FUEL STORAGE TANK
50	185	50-185-OPN-1	RLW TANK	N/A	N/A	DECON TRAILER			5 DAYS A WEEK	No	NON-POTABLE WATER
50	185	50-185-OPN-2	DAYLIGHT	N/A	N/A	DECON TRAILER			NO FLOW	No	TERTIARY CONTAINMENT
50	185	50-185-OPN-3	DAYLIGHT	N/A	N/A	DECON TRAILER			FLOW IS NIL	No	EVAPORATIVE COOLER CONDENSATE
50	185	50-185-OPN-4	ATMOSPHERE	N/A	N/A	BREATHING AIR VENT			NO FLOW	No	NONE
50	185	50-185-OPN-5	ATMOSPHERE	N/A	N/A	BREATHING AIR VENT			NO FLOW	No	NONE
50	189	50-189	ND	N/A	N/A	STORAGE			NO DRAINS	No	NONE
50	191	50-191-OPN-1	ATMOSPHERE	N/A	N/A	DIESEL GENERATOR			NO FLOW	No	VAPOR EXHAUST
50	191	50-191-OPN-2	N/A	N/A	N/A	DIESEL GENERATOR			NO FLOW	No	STUB OUT
50	191	50-191-OPN-3	DAYLIGHT	N/A	N/A	DIESEL GENERATOR			NO FLOW	No	OIL DRAIN

Please print or type in the unshaded areas only.

EPA I.D. NUMBER (copy from Item 1 of Form 1)
NM0890010515

Form Approved.
OMB No. 2040-0086
Approval expires 7-31-88

FORM 2C NPDES

EPA

U.S. ENVIRONMENTAL PROTECTION AGENCY
APPLICATION FOR PERMIT TO DISCHARGE WASTEWATER
EXISTING MANUFACTURING, COMMERCIAL, MINING AND SILVICULTURAL OPERATIONS
Consolidated Permits Program

I. OUTFALL LOCATION

For each outfall, list the latitude and longitude of its location to the nearest 15 seconds and the name of the receiving water.

A. OUTFALL NUMBER (list)	B. LATITUDE			C. LONGITUDE			D. RECEIVING WATER (name)
	1. DEG.	2. MIN.	3. SEC.	1. DEG.	2. MIN.	3. SEC.	
051	35	51	58	106	17	49	Tributary to Mortandad Canyon, an ephemeral tributary to Rio Grande

II. FLOWS, SOURCES OF POLLUTION, AND TREATMENT TECHNOLOGIES

A. Attach a line drawing showing the water flow through the facility. Indicate sources of intake water, operations contributing wastewater to the effluent, and treatment units labeled to correspond to the more detailed descriptions in Item B. Construct a water balance on the line drawing by showing average flows between intakes, operations, treatment units, and outfalls. If a water balance cannot be determined *(e.g., for certain mining activities)*, provide a pictorial description of the nature and amount of any sources of water and any collection or treatment measures.

B. For each outfall, provide a description of: (1) All operations contributing wastewater to the effluent, including process wastewater, sanitary wastewater, cooling water, and storm water runoff; (2) The average flow contributed by each operation; and (3) The treatment received by the wastewater. Continue on additional sheets if necessary.

1. OUTFALL NO. (list)	2. OPERATION(S) CONTRIBUTING FLOW		3. TREATMENT		
	a. OPERATION (list)	b. AVERAGE FLOW (include units)	a. DESCRIPTION	b. LIST CODES FROM TABLE 2C-1	
051	TA-50-1 Radioactive Industrial waste		Flocculation	1	G
	treatment plant:	87500 GPW	Settling	1	U
	a) Metal working shops		Filtration	1	Q
	b) Experimental labs		Ion exchange	2	J
	c) Electroplating rinse		Chemical precipitation	2	C
	d) Controlled air incinerator		Coagulation	2	D
	e) Chemical batch waste treatment		Neutralization	2	K
			Drying	5	M

OFFICIAL USE ONLY *(effluent guidelines subcategories)*

CONTINUED FROM THE FRONT

C. Except for storm runoff, leaks, or spills, are any of the discharges described in Items II-A or B intermittent or seasonal?

☒ YES (complete the following table) ☐ NO (go to Section III)

OUTFALL NUMBER (list)	OPERATION(s) CONTRIBUTING FLOW (list)	3. FREQUENCY a. DAYS PER WEEK (specify average)	b. MONTHS PER YEAR (specify average)	4. FLOW a. FLOW RATE (in mgd) 1. LONG TERM AVERAGE	2. MAXIMUM DAILY	b. TOTAL VOLUME (specify with units) 1. LONG TERM AVERAGE	2. MAXIMUM DAILY	c. DURATION (in days)
051	Radioactive Industrial Waste	3-4	12	2.5 X10-2	2.5 X10-2	2.5 X10-2 MGD	2.5 X10-2 MGD	210 d/yr

III. PRODUCTION

A. Does an effluent guideline limitation promulgated by EPA under Section 304 of the Clean Water Act apply to your facility?

☐ YES (complete Item III-B) ☒ NO (go to Section IV)

B. Are the limitations in the applicable effluent guideline expressed in terms of production (or other measure of operation)?

☐ YES (complete Item III-C) ☐ NO (go to Section IV)

C. If you answered "yes" to Item III-B, list the quantity which represents an actual measurement of your level of production, expressed in the terms and units used in the applicable effluent guideline, and indicate the affected outfalls.

1. AVERAGE DAILY PRODUCTION a. QUANTITY PER DAY	b. UNITS OF MEASURE	c. OPERATION, PRODUCT, MATERIAL, ETC. (specify)	2. AFFECTED OUTFALLS (list outfall numbers)

IV. IMPROVEMENTS

A. Are you now required by any Federal, State or local authority to meet any implementation schedule for the construction, upgrading or operation of wastewater treatment equipment or practices or any other environmental programs which may affect the discharges described in this application? This includes, but is not limited to, permit conditions, administrative or enforcement orders, enforcement compliance schedule letters, stipulations, court orders, and grant or loan conditions.

☐ YES (complete the following table) ☒ NO (go to Item IV-B)

1. IDENTIFICATION OF CONDITION, AGREEMENT, ETC.	2. AFFECTED OUTFALLS a. no.	b. source of discharge	3. BRIEF DESCRIPTION OF PROJECT	4. FINAL COMPLIANCE DATE a. req.	b. proj.

B. OPTIONAL: You may attach additional sheets describing any additional water pollution control programs (or other environmental projects which may affect your discharges) you now have underway or which you plan. Indicate whether each program is now underway or planned, and indicate your actual or planned schedules for construction. ☐ MARK "X" IF DESCRIPTION OF ADDITIONAL CONTROL PROGRAMS IS ATTACHED

CONTINUE ON PAGE 3

EPA I.D. NUMBER (copy from Item 1 of Form 1)
NM0890010515

Form Approved.
OMB No. 2040-0086
Approval expires 7-31-88

V. INTAKE AND EFFLUENT CHARACTERISTICS

A, B, & C: See instructions before proceeding — Complete one set of tables for each outfall — Annotate the outfall number in the space provided. NOTE: Tables V-A, V-B, and V-C are included on separate sheets numbered V-1 through V-9.

D. Use the space below to list any of the pollutants listed in Table 2c-3 of the instructions, which you know or have reason to believe is discharged or may be discharged from any outfall. For every pollutant you list, briefly describe the reasons you believe it to be present and report any analytical data in your possession.

1. POLLUTANT	2. SOURCE	1. POLLUTANT	2. SOURCE
N/A			

VI. POTENTIAL DISCHARGES NOT COVERED BY ANALYSIS

Is any pollutant listed in Item V-C a substance or a component of a substance which you currently use or manufacture as an intermediate or final product or byproduct?

☐ YES (list all such pollutants below) ☒ NO (go to Item VI-B)

CONTINUED FROM THE FRONT

VII. BIOLOGICAL TOXICITY TESTING DATA

Do you have any knowledge or reason to believe that any biological test for acute or chronic toxicity has been made on any of your discharges or on a receiving water in relation to your discharge within the last 3 years?

☐ YES *(identify the test(s) and describe their purposes below)* ☒ NO *(go to Section VIII)*

VIII. CONTRACT ANALYSIS INFORMATION

Were any of the analyses reported in Item V performed by a contract laboratory or consulting firm?

☒ YES *(list the name, address, and telephone number of, and pollutants analyzed by, each such laboratory or firm below)* ☐ NO *(go to Section IX)*

A. NAME	B. ADDRESS	C. TELEPHONE (area code & no.)	D. POLLUTANTS ANALYZED (list)
IT	1550 Bear Creek Road, Oak ridge, TN 37830		Sulfide, total Ammonia Phenolics
IT	5815 Middlebrook Pike Knoxville, TN 37921		BOD TOC TON Color Surfactants

IX. CERTIFICATION

I certify under penalty of law that this document and all attachments were prepared under my direction or supervision in accordance with a system designed to assure that qualified personnel properly gather and evaluate the information submitted. Based on my inquiry of the person or persons who manage the system or those persons directly responsible for gathering the information, the information submitted is, to the best of my knowledge and belief, true, accurate, and complete. I am aware that there are significant penalties for submitting false information, including the possibility of fine and imprisonment for knowing violations.

A. NAME & OFFICIAL TITLE (type or print)	B. PHONE NO. (area code & no.)
JOSEPH VOEZELLA, E, S, & H BRANCH CHIEF	505-667-5105
ALLEN J. TIEDMAN, ASSOC. DIRECTOR FOR OPERATIONS	505-667-9390
C. SIGNATURE	D. DATE SIGNED

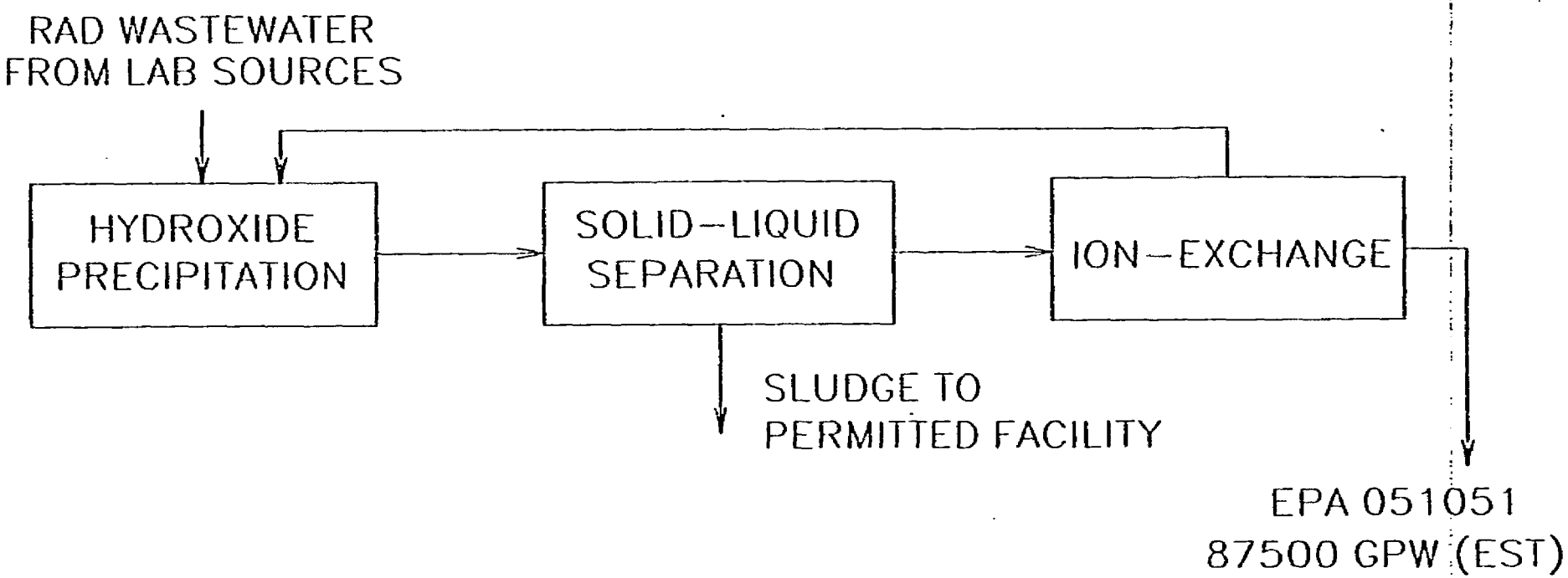

TA–50 RAD WASTEWATER TREATMENT

PLEASE PRINT OR TYPE IN THE UNSHADED AREAS ONLY. You may report some or all of this information on separate sheets (use the same format) instead of completing these pages. SEE INSTRUCTIONS.

EPA I.D. NUMBER (copy from Item I of Form 1): NM0890010515

Form Approved. OMB No. 2040-0086 Approval expires 7-31-88

V. INTAKE AND EFFLUENT CHARACTERISTICS (continued from page 3 of Form 2-C)

OUTFALL NO. 051

PART A - You must provide the results of at least one analysis for every pollutant in this table. Complete one table for each outfall. See instructions for additional details.

1. POLLUTANT	2. EFFLUENT a. MAXIMUM DAILY VALUE (1) CONCENTRATION	(2) MASS	b. MAXIMUM 30 DAY VALUE (if available) (1) CONCENTRATION	(2) MASS	c. LONG TERM AVRG. VALUE (if available) (1) CONCENTRATION	(2) MASS	d. NO. OF ANALYSES	3. UNITS (specify if blank) a. CONCENTRATION	b. MASS	4. INTAKE (optional) a. LONG TERM AVERAGE VALUE (1) CONCENTRATION	(2) MASS	b. NO. OF ANALYSES
a. Biochemical Oxygen Demand (BOD)	100.0	9.5						mg/l	g/d			
b. Chemical Oxygen Demand (COD)	192.5	18.2						mg/l	g/d			
c. Total Organic Carbon (TOC)	54.7	5.2						mg/l	g/d			
d. Total Suspended Solids (TSS)	21.0	2.0						mg/l	g/d			
e. Ammonia (as N)	13.6	1.287						mg/l	g/d			
f. Flow	VALUE 25000		VALUE		VALUE			gal/day		VALUE		
g. Temperature (winter)	VALUE 13 C		VALUE		VALUE			°C		VALUE		
h. Temperature (summer)	VALUE N/A		VALUE		VALUE			°C		VALUE		
i. pH	MINIMUM 7.1	MAXIMUM	MINIMUM	MAXIMUM				STANDARD UNITS				

PART B - Mark "X" in column 2-a for each pollutant you know or have reason to believe is present. Mark "X" in column 2-b for each pollutant you believe to be absent. If you mark column 2a for any pollutant which is limited either directly, or indirectly but expressly, in an effluent limitations guideline, you must provide the results of at least one analysis for that pollutant. For other pollutants for which you mark column 2a, you must provide quantitative data or an explanation of their presence in your discharge. Complete one table for each outfall. See the instructions for additional details and requirements.

1. POLLUTANT AND CAS NO. (if available)	2. MARK "X" a. BELIEVED PRESENT	b. BELIEVED ABSENT	3. EFFLUENT a. MAXIMUM DAILY VALUE (1) CONCENTRATION	(2) MASS	b. MAXIMUM 30 DAY VALUE (if available) (1) CONCENTRATION	(2) MASS	c. LONG TERM AVRG. VALUE (if available) (1) CONCENTRATION	(2) MASS	d. NO. OF ANALYSES	4. UNITS a. CONCENTRATION	b. MASS	5. INTAKE (optional) a. LONG TERM AVERAGE VALUE (1) CONCENTRATION	(2) MASS	b. NO. OF ANALYSES
a. Bromide (24959-67-9)		X	< 0.5	< 47.3						mg/l	g/d			
b. Chlorine, Total Residual		X	0.00	0.0						mg/l	mg/d			
c. Color	X		30.0							units				
d. Fecal Coliform		X												
e. Fluoride (16984-48-8)	X		19.15	1.8						mg/l	g/d			
f. Nitrate-Nitrite (as N)	X		356	33.7						mg/l	g/d			

CONTINUE ON REVERSE

ITEM V-B CONTINUED FROM FRONT

1. POLLUTANT AND CAS NO. (if available)	2. MARK 'X' a. PRESENT	b. ABSENT	3. EFFLUENT a. MAXIMUM DAILY VALUE (1) CONCENTRATION	(2) MASS	b. MAXIMUM 30 DAY VALUE (if available) (1) CONCENTRATION	(2) MASS	c. LONG TERM AVRG. VALUE (if available) (1) CONCENTRATION	(2) MASS	d. NO. OF ANALYSES	4. UNITS a. CONCENTRATION	b. MASS	5. INTAKE (optional) a. LONG TERM AVERAGE VALUE (1) CONCENTRATION	(2) MASS	b. NO. OF ANALYSES
g. Nitrogen, Total Organic (as N)	X		14.3	1.4						mg/l	kg/d			
h. Oil and Grease	X		2.2	208.2						mg/l	g/d			
i. Phosphorus (as P), Total (7723-14-0)	X		.17	16.1						mg/l	g/d			
j. Radioactivity														
(1) Alpha, Total	X		29	2.7						pCi/l	uCi/d			
(2) Beta, Total	X		190	18.0						pCi/l	uCi/d			
(3) Radium, Total		X												
(4) Radium 226, Total	X		.33	31.2						pCi/l	nCi/d			
k. Sulfate (as SO_4) (14808-79-8)	X		121	11.4						mg/l	kg/d			
l. Sulfide (as S)		X	< 0.5	< 47.3						mg/l	g/d			
m. Sulfite (as SO_3) (14265-45-3)		X	<	< 0.0						mg/l	mg/d			
n. Surfactants	X		.42	39.7						mg/l	g/d			
o. Aluminum, Total (7429-90-5)	X		0.07	6.6						mg/l	g/d			
p. Barium, Total (7440-39-3)	X		0.092	8.7						mg/l	g/d			
q. Boron, Total (7440-42-8)	X		1.22	115.4						mg/l	g/d			
r. Cobalt, Total (7440-48-4)		X	< 0.07	< 6.6						mg/l	g/d			
s. Iron, Total (7439-89-6)	X		0.19	18.0						mg/l	g/d			
t. Magnesium, Total (7439-96-4)	X		.33	31.2						mg/l	g/d			
u. Molybdenum, Total (7439-98-7)	X		0.35	33.1						mg/l	g/d			
v. Manganese, Total (7439-96-5)	X		0.005	0.5						mg/l	g/d			
w. Tin, Total (7440-31-5)		X	< 0.050	< 4.7						mg/l	g/d			
x. Titanium, Total (7440-32-6)		X	< 0.004	< 0.4						mg/l	g/d			

CONTINUE ON PAGE V-3

EPA I.D. NUMBER (copy from Item 1 of Form 1)	OUTFALL NUMBER
NM0890010515	051

Form Approved
OMB No. 2040-0086
Approval expires 7-31-88

CONTINUED FROM PAGE 3 OF FORM 2-C

PART C - If you are a primary industry and this outfall contains process wastewater, refer to Table 2c-2 in the instructions to determine which of the GC/MS fractions you must test for. Mark "X" in column 2-a for all such GC/MS fractions that apply to your industry and for ALL toxic metals, cyanides, and total phenols. If you are not required to mark column 2-a (secondary industries, nonprocess wastewater outfalls, and nonrequired GC/MS fractions), mark "X" in column 2-b for each pollutant you know or have reason to believe is present. Mark "X" in column 2-c for each pollutant you believe is absent. If you mark column 2a for any pollutant, you must provide the results of at least one analysis for that pollutant. If you mark column 2b for any pollutant, you must provide the results of at least one analysis for that pollutant if you know or have reason to believe it will be discharged in concentrations of 10 ppb or greater. If you mark column 2b for acrolein, acrylonitrile, 2,4 dinitrophenol, or 2-methyl-4, 6 dinitrophenol, you must provide the results of at least one analysis for each of these pollutants which you know or have reason to believe that you discharge in concentrations of 100 ppb or greater. Otherwise, for pollutants for which you mark column 2b, you must either submit at least one analysis or briefly describe the reasons the pollutant is expected to be discharged. Note that there are 7 pages to this part; please review each carefully. Complete one table (all 7 pages) for each outfall. See instructions for additional details and requirements.

1. POLLUTANT AND CAS NUMBER (if available)	2. MARK "X"			3. EFFLUENT								4. UNITS		5. INTAKE (optional)		
	a. TESTING REQUIRED BY AUTHORITY	b. BELIEVED PRESENT	c. BELIEVED ABSENT	a. MAXIMUM DAILY VALUE (1) CONCENTRATION	a. MAXIMUM DAILY VALUE (2) MASS	b. MAXIMUM 30 DAY VALUE (if available) (1) CONCENTRATION	b. MAXIMUM 30 DAY VALUE (if available) (2) MASS	c. LONG TERM AVRG. VALUE (if available) (1) CONCENTRATION	c. LONG TERM AVRG. VALUE (if available) (2) MASS	d. NO. OF ANALYSES	a. CONCENTRATION	b. MASS	a. LONG TERM AVERAGE VALUE (1) CONCENTRATION	a. LONG TERM AVERAGE VALUE (2) MASS	b. NO. OF ANALYSES
METALS, CYANIDE, AND TOTAL PHENOLS															
1M. Antimony, Total (7440-36-0)			X	< 0.050	< 1.9						mg/l	g/d			
2M. Arsenic, Total (7440-38-2)			X	< 0.002	< 76.3						mg/l	mg/d			
3M. Beryllium, Total, 7440-41-7)		X		0.001	38.2						mg/l	mg/d			
4M. Cadmium, Total (7440-43-9)		X		0.00025	23.7						mg/l	mg/d			
5M. Chromium, Total (7440-47-3)		X		0.022	2.1						mg/l	g/d			
6M. Copper, Total (7440-50-8)		X		0.15	14.2						mg/l	g/d			
7M. Lead, Total (7439-92-1)		X		0.0081	0.8						mg/l	g/d			
8M. Mercury, Total (7439-97-6)		X		0.00026	24.6						mg/l	mg/d			
9M. Nickel, Total (7440-02-0)			X	< 0.03	< 2.8						mg/l	g/d			
10M. Selenium, Total (7782-49-2)			X	< 0.001	< 38.2						mg/l	mg/d			
11M. Silver, Total (7440-22-4)			X	< 0.010	< 0.4						mg/l	g/d			
12M. Thallium, Total (7440-28-0)			X	< 0.05	< 4.7						mg/l	g/d			
13M. Zinc, Total (7440-66-6)		X		0.032	3.0						mg/l	g/d			
14M. Cyanide, Total (57-12-5)		X		0.22	20.8						mg/l	g/d			
15M. Phenols, Total		X		< 0.01	< 0.4						mg/l	g/d			
DIOXIN															
2,3,7,8-Tetrachlorodibenzo-P-Dioxin (1764-01-6)			X	DESCRIBE RESULTS											

CONTINUE ON REVERSE

1. POLLUTANT AND CAS NUMBER (if available)	2. MARK 'X' a. TESTING REQUIRED	b. REQUIRED TO BE TESTED	c. BELIEVED ABSENT	3. EFFLUENT a. MAXIMUM DAILY VALUE (1) CONCENTRATION	(2) MASS	b. MAXIMUM 30 DAY VALUE (if available) (1) CONCENTRATION	(2) MASS	c. LONG TERM AVRG. VALUE (if available) (1) CONCENTRATION	(2) MASS	d. NO. OF ANALYSES	4. UNITS a. CONCENTRATION	b. MASS	5. INTAKE (optional) a. LONG TERM AVERAGE VALUE (1) CONCENTRATION	(2) MASS	b. NO. OF ANALYSES
GC/MS FRACTION – VOLATILE COMPOUNDS															
1V. Acrolein (107-02-8)			X												
2V. Acrylonitrile (107-13-1)			X												
3V. Benzene (71-43-2)			X	< 0.005	< 0.2						mg/l	g/d			
4V. Bis (Chloromethyl) Ether (542-88-1)			X												
5V. Bromoform (75-25-2)			X	< 0.005	< 0.2						mg/l	g/d			
6V. Carbon Tetrachloride (56-23-5)			X	< 0.005	< 0.2						mg/l	g/d			
7V. Chlorobenzene (108-90-7)		X		0.0341	3.2						mg/l	g/d			
8V. Chlorodibromomethane (124-48-1)			X	< 0.005	< 0.2						mg/l	g/d			
9V. Chloroethane (75-00-3)			X	< 0.010	< 0.4						mg/l	g/d			
10V. 2-Chloroethylvinyl Ether (110-75-8)			X												
11V. Chloroform (67-66-3)			X	< 0.005	< 0.2						mg/l	g/d			
12V. Dichlorobromomethane (75-27-4)			X	< 0.005	< 0.2						mg/l	g/d			
13V. Dichlorodifluoromethane (75-71-8)			X												
14V. 1,1-Dichloroethane (75-34-3)			X	< 0.005	< 0.2						mg/l	g/d			
15V. 1,2-Dichloroethane (107-06-2)			X	< 0.005	< 0.2						mg/l	g/d			
16V. 1,1-Dichloroethylene (75-35-4)		X		0.0341	3.2						mg/l	g/d			
17V. 1,2-Dichloropropane (78-87-5)			X	< 0.005	< 0.2						mg/l	kg/d			
18V. 1,3-Dichloropropylene (542-75-6)			X	< 0.005	< 0.5						mg/l	g/d			
19V. Ethylbenzene (100-41-4)			X	< 0.005	< 0.2						mg/l	g/d			
20V. Methyl Bromide (74-83-9)			X	< 0.010	< 0.4						mg/l	g/d			
21V. Methyl Chloride (74-87-3)			X	< 0.010	< 0.4						mg/l	g/d			

CONTINUE ON PAGE V-5

CONTINUE[illegible]OM PAGE V-4

EPA I.D. NUMBER (copy from Item 1 [illegible] 1) NM0890010515 | OUTFALL NUMBER 051

OMB No. 2040-0086
Approval expires 7-31-88

1. POLLUTANT AND CAS NUMBER (if available)	2. MARK "X" a. Present in effluent	b. Believed present	c. Believed absent	3. EFFLUENT a. MAXIMUM DAILY VALUE (1) Concentration	(2) Mass	b. MAXIMUM 30 DAY VALUE (if available) (1) Concentration	(2) Mass	c. LONG TERM AVRG. VALUE (if available) (1) Concentration	(2) Mass	d. NO. OF ANALYSES	4. UNITS a. CONCENTRATION	b. MASS	5. INTAKE (optional) a. LONG TERM AVERAGE VALUE (1) Concentration	(2) Mass	b. NO. OF ANALYSES
GC/MS FRACTION – VOLATILE COMPOUNDS (continued)															
22V. Methylene Chloride (75-09-2)		X		0.0284	2.7						mg/l	g/d			
23V. 1,1,2,2-Tetrachloroethane (79-34-5)			X	< 0.005	< 0.5						mg/l	g/d			
24V. Tetrachloroethylene (127-18-4)			X	< 0.005	< 0.5						mg/l	g/d			
25V. Toluene (108-88-3)		X		0.0341	3.2						mg/l	g/d			
26V. 1,2-Trans Dichloroethylene (156-60-5)			X	< 0.005	< 0.5						mg/l	g/d			
27V. 1,1,1-Trichloroethane (71-55-6)			X	< 0.005	< 0.5						mg/l	g/d			
28V. 1,1,2-Trichloroethane (79-00-5)			X	< 0.005	< 0.5						mg/l	g/d			
29V. Trichloroethylene (79-01-6)		X		0.0341	3.2						mg/l	g/d			
30V. Trichlorofluoromethane (75-69-4)			X	< 0.005	< 0.5						mg/l	g/d			
31V. Vinyl Chloride (75-01-4)			X	< 0.010	< 0.9						mg/l	g/d			
GC/MS FRACTION – ACID COMPOUNDS															
1A. 2-Chlorophenol (95-57-8)			X	< 0.040	< 3.8						mg/l	g/d			
2A. 2,4-Dichlorophenol (120-83-2)			X	< 0.040	< 3.8						mg/l	g/d			
3A. 2,4-Dimethylphenol (105-67-9)			X	< 0.040	< 3.8						mg/l	g/d			
4A. 4,6-Dinitro-O-Cresol (534-52-1)			X	< 0.040	< 3.8						mg/l	g/d			
5A. 2,4-Dinitrophenol (51-28-5)			X	< 0.040	< 3.8						mg/l	g/d			
6A. 2-Nitrophenol (88-75-5)			X	< 0.040	< 3.8						mg/l	g/d			
7A. 4-Nitrophenol (100-02-7)			X	< 0.040	< 3.8						mg/l	g/d			
8A. P-Chloro-M-Cresol (59-50-7)			X	< 0.040	< 3.8						mg/l	g/d			
9A. Pentachlorophenol (87-86-5)			X	< 0.040	< 3.8						mg/l	g/d			
10A. Phenol (108-95-2)			X	< 0.040	< 3.8						mg/l	g/d			
11A. 2,4,6-Trichlorophenol (88-06-2)			X	< 0.040	< 3.8						mg/l	g/d			

CONTINUED FROM THE FRONT

1. POLLUTANT AND CAS NUMBER (if available)	2. MARK "X" a. Testing Required	b. Believed Present	c. Believed Absent	3. EFFLUENT a. MAXIMUM DAILY VALUE (1) Concentration	(2) Mass	b. MAXIMUM 30 DAY VALUE (if available) (1) Concentration	(2) Mass	c. LONG TERM AVRG. VALUE (if available) (1) Concentration	(2) Mass	d. NO. OF ANALYSES	4. UNITS a. CONCENTRATION	b. MASS	5. INTAKE (optional) a. LONG TERM AVERAGE VALUE (1) Concentration	(2) Mass	b. NO. OF ANALYSES
GC/MS FRACTION — BASE/NEUTRAL COMPOUNDS															
1B. Acenaphthene (83-32-9)			X	< 0.040	< 3.8						mg/l	mg/d			
2B. Acenaphtylene (208-96-8)			X	< 0.040	< 3.8						mg/l	mg/d			
3B. Anthracene (120-12-7)			X	< 0.040	< 3.8						mg/l	mg/d			
4B. Benzidine (92-87-5)			X	< 0.040	< 3.8						mg/l	mg/d			
5B. Benzo (a) Anthracene (56-55-3)			X	< 0.040	< 3.8						mg/l	mg/d			
6B. Benzo (a) Pyrene (50-32-8)			X	< 0.040	< 3.8						mg/l	mg/d			
7B. 3,4-Benzo-fluoranthene (205-99-2)			X	< 0.040	< 3.8						mg/l	mg/d			
8B. Benzo (ghi) Perylene (191-24-2)			X	< 0.040	< 3.8						mg/l	mg/d			
9B. Benzo (k) Fluoranthene (207-08-9)			X	< 0.040	< 3.8						mg/l	mg/d			
10B. Bis (2-Chloro-ethoxy) Methane (111-91-1)			X	< 0.040	< 3.8						mg/l	mg/d			
11B. Bis (2-Chloro-ethyl) Ether (111-44-4)			X	< 0.040	< 3.8						mg/l	mg/d			
12B. Bis (2-Chloroisopropyl) Ether (102-80-1)			X	< 0.040	< 3.8						mg/l	mg/d			
13B. Bis (2-Ethyl-hexyl) Phthalate (117-81-7)			X	< 0.040	< 3.8						mg/l	mg/d			
14B. 4-Bromo-phenyl Phenyl Ether (101-55-3)			X	< 0.040	< 3.8						mg/l	mg/d			
15B. Butyl Benzyl Phthalate (85-68-7)			X	< 0.040	< 3.8						mg/l	mg/d			
16B. 2-Chloro-naphthalene (91-58-7)			X	< 0.040	< 3.8						mg/l	mg/d			
17B. 4-Chloro-phenyl Phenyl Ether (7005-72-3)			X	< 0.040	< 3.8						mg/l	mg/d			
18B. Chrysene (218-01-9)			X	< 0.040	< 3.8						mg/l	mg/d			
19B. Dibenzo (a,h) Anthracene (53-70-3)			X	< 0.040	< 3.8						mg/l	mg/d			
20B. 1,2-Dichloro-benzene (95-50-1)			X	< 0.040	< 3.8						mg/l	mg/d			
21B. 1,3-Dichloro-benzene (541-73-1)			X	< 0.040	< 3.8						mg/l	g/d			

CONTINUE ON PAGE V-7

CONTINUED FROM PAGE V-6

EPA I.D. NUMBER (copy from Item 1 of Form 1) NM0890010515

OUTFALL NUMBER 051

Form Approved. OMB No. 2040-0086 Approval expires 7-31-88

1. POLLUTANT AND CAS NUMBER (if available)	2. MARK "X" a. Test and Reason	b. Believed Present	c. Believed Absent	3. EFFLUENT a. MAXIMUM DAILY VALUE (1) Concentration	(2) Mass	b. MAXIMUM 30 DAY VALUE (if available) (1) Concentration	(2) Mass	c. LONG TERM AVRG. VALUE (if available) (1) Concentration	(2) Mass	d. NO. OF ANALYSES	4. UNITS a. CONCENTRATION	b. MASS	5. INTAKE (optional) a. LONG TERM AVERAGE VALUE (1) Concentration	(2) Mass	b. NO. OF ANALYSES
GC/MS FRACTION – BASE/NEUTRAL COMPOUNDS (continued)															
22B. 1,4-Dichlorobenzene (106-46-7)			X	< 0.040	< 3.8						mg/l	mg/d			
23B. 3,3'-Dichlorobenzidine (91-94-1)			X	< 0.040	< 3.8						mg/l	mg/d			
24B. Diethyl Phthalate (84-66-2)			X	< 0.040	< 3.8						mg/l	mg/d			
25B. Dimethyl Phthalate (131-11-3)			X	< 0.040	< 0.0						mg/l	mg/d			
26B. Di-N-Butyl Phthalate (84-74-2)			X	< 0.040	< 3.8						mg/l	mg/d			
27B. 2,4-Dinitrotoluene (121-14-2)			X	< 0.040	< 3.8						mg/l	mg/d			
28B. 2,6-Dinitrotoluene (606-20-2)			X	< 0.040	< 3.8						mg/l	mg/d			
29B. Di-N-Octyl Phthalate (117-84-0)			X	< 0.040	< 3.8						mg/l	mg/d			
30B. 1,2-Diphenylhydrazine (as Azobenzene) (122-66-7)			X	< 0.040	< 3.8						mg/l	mg/d			
31B. Fluoranthene (206-44-0)			X	< 0.040	< 3.8						mg/l	mg/d			
32B. Fluorene (86-73-7)			X	< 0.040	< 3.8						mg/l	g/d			
33B. Hexachlorobenzene (118-74-1)			X	< 0.040	< 3.8						mg/l	mg/d			
34B. Hexachlorobutadiene (87-68-3)			X	< 0.040	< 3.8						mg/l	mg/d			
35B. Hexachlorocyclopentadiene (77-47-4)			X	< 0.040	< 3.8						mg/l	mg/d			
36B. Hexachloroethane (67-72-1)			X	< 0.040	< 3.8						mg/l	mg/d			
37B. Indeno (1,2,3-cd) Pyrene (193-39-5)			X	< 0.040	< 3.8						mg/l	mg/d			
38B. Isophorone (78-59-1)			X	< 0.040	< 3.8						mg/l	mg/d			
39B. Naphthalene (91-20-3)			X	< 0.040	< 3.8						mg/l	mg/d			
40B. Nitrobenzene (98-95-3)			X	< 0.040	< 3.8						mg/l	mg/d			
41B. N-Nitrosodimethylamine (62-75-9)			X	< 0.040	< 3.8						mg/l	mg/d			
42B. N-Nitrosodi-N-Propylamine (621-64-7)			X	< 0.040	< 3.8						mg/l	g/d			

CONTINUED FROM THE FRONT

1. POLLUTANTS AND CAS NUMBER (if available)	2. MARK "X" a. Test was required by guidance	b. Test required by EPA	c. Test required by applicant	3. EFFLUENT a. MAXIMUM DAILY VALUE (1) CONCENTRATION	(2) MASS	b. MAXIMUM 30 DAY VALUE (if available) (1) CONCENTRATION	(2) MASS	c. LONG TERM AVRG. VALUE (if available) (1) CONCENTRATION	(2) MASS	d. NO. OF ANALYSES	4. UNITS a. CONCENTRATION	b. MASS	5. INTAKE (optional) a. LONG TERM AVERAGE VALUE (1) CONCENTRATION	(2) MASS	b. NO. OF ANALYSES
GC/MS FRACTION – BASE/NEUTRAL COMPOUNDS (continued)															
43B. N-Nitrosodiphenylamine (86-30-6)			X	< 0.040	< 3.8						mg/l	mg/d			
44B. Phenanthrene (85-01-8)			X	< 0.040	< 3.8						mg/l	mg/d			
45B. Pyrene (129-00-0)			X	< 0.040	< 3.8						mg/l	mg/d			
46B. 1,2,4-Trichlorobenzene (120-82-1)			X	< 0.040	< 3.8						mg/l	mg/d			
GC/MS FRACTION – PESTICIDES															
1P. Aldrin (309-00-2)			X	< 0.06	< 5.7						ug/l	ug/d			
2P. α-BHC (319-84-6)			X	< 0.02	< 1.9						ug/l	ug/d			
3P. β-BHC (319-85-7)			X	< 0.1	< 9.5						ug/l	ug/d			
4P. γ-BHC (58-89-9)			X	< 0.03	< 2.8						ug/l	ug/d			
5P. δ-BHC (319-86-8)			X	< 0.12	< 11.4						ug/l	ug/d			
6P. Chlordane (57-74-9)			X	< 0.25	< 23.7						ug/l	ug/d			
7P. 4,4'-DDT (50-29-3)			X	< 0.06	< 5.7						ug/l	ug/d			
8P. 4,4'-DDE (72-55-9)			X	< 0.08	< 7.6						ug/l	ug/d			
9P. 4,4'-DDD (72-54-8)			X	< 0.08	< 7.6						ug/l	ug/d			
10P. Dieldrin (60-57-1)			X	< 0.04	< 3.8						ug/l	ug/d			
11P. α-Endosulfan (115-29-7)			X	< 0.05	< 4.7						ug/l	ug/d			
12P. β-Endosulfan (115-29-7)			X	< 0.08	< 7.6						ug/l	ug/d			
13P. Endosulfan Sulfate (1031-07-8)			X	< 0.18	< 17.0						ug/l	ug/d			
14P. Endrin (72-20-8)			X	< 0.03	< 2.8						ug/l	ug/d			
15P. Endrin Aldehyde (7421-93-4)			X	< 0.62	< 58.7						ug/l	ug/d			
16P. Heptachlor (76-44-8)			X	< 0.15	< 14.2						ug/l	mg/d			

CONTINUE ON PAGE V-9

EPA I.D. NUMBER (copy from Item 1 of Form 1) NM0890010515

OUTFALL NUMBER 051

Form Approved. OMB No. 2040-0086 Approval expires 7-31-82

1. POLLUTANT AND CAS NUMBER (if available)	2. MARK "X" a. Testing Required	b. Believed Present	c. Believed Absent	3. EFFLUENT a. MAXIMUM DAILY VALUE (1) Concentration	(2) Mass	b. MAXIMUM 30 DAY VALUE (if available) (1) Concentration	(2) Mass	c. LONG TERM AVRG. VALUE (if available) (1) Concentration	(2) Mass	d. NO. OF ANALYSES	4. UNITS a. Concentration	b. Mass	5. INTAKE (optional) a. Long Term Average Value (1) Concentration	(2) Mass	b. No. of Analyses
GC/MS FRACTION – PESTICIDES (continued)															
17P. Heptachlor Epoxide (1024-57-3)			X	< 0.04	< 3.8						ug/l	ug/d			
18P. PCB-1242 (53469-21-9)			X	< 0.67	< 63.4						ug/l	ug/d			
19P. PCB-1254 (11097-69-1)			X	< 0.67	< 63.4						ug/l	ug/d			
20P. PCB-1221 (11104-28-2)			X	N.D.											
21P. PCB-1232 (11141-16-5)			X	N.D.											
22P. PCB-1248 (12672-29-6)			X	N.D.											
23P. PCB-1260 (11096-82-5)			X	< 0.67	< 63.4						ug/l	ug/d			
24P. PCB-1016 (12674-11-2)			X	N.D.											
25P. Toxaphene (8001-35-2)			X	< 2.5	< 236.6						ug/l	mg/d			

Please type or print in the unshaded areas only

EPA ID Number (copy from Item I of Form 1)
NM0890010515

Form Approved
OMB No. 2040-0086
Approval expires 7-31-88

Form 2D NPDES

EPA New Sources and New Dischargers Application for Permit to Discharge Process Wastewater

Outfall Location

For each outfall, list the latitude and longitude, and the name of the receiving water

Outfall Number (list)	Latitude Deg	Latitude Min	Latitude Sec	Longitude Deg	Longitude Min	Longitude Sec	Receiving Water (name)
50-1-OPN-52	35	51	58	106	17	49	Tributary to Mortandad Canyon, and ephemeral tributary to
							the Rio Grande

II. Discharge Date (When do you expect to begin discharging?)

Active discharge noted during waste stream characterization.

III. Flows, Sources of Pollution, and Treatment Technologies

A. For each outfall, provide a description of (1) All operations contributing wastewater to the effluent, including process wastewater, sanitary wastewater, cooling water, and stormwater runoff; (2) The average flow contributed by each operation; and (3) The treatment received by the wastewater. Continue on additional sheets if necessary.

Outfall Number	1. Operations Contributing Flow (list)	2. Average Flow (include units)	3. Treatment (Description or List Codes from Table 2D-1)
50-1-OPN-52	Floor drains (2)	2 GPD	None
	Roof drains (8)	storm water	None

B. Attach a line drawing showing the water flow through the facility. Indicate sources of intake water, operations contributing wastewater to the effluent, and treatment units labeled to correspond to the more detailed descriptions in Item III-A. Construct a water balance on the line drawing by showing average flows between intakes, operations, treatment units, and outfalls. If a water balance cannot be determined (e.g., for certain mining activities), provide a pictorial description of the nature and amount of any sources of water and any collection or treatment measures.

C. Except for storm runoff, leaks, or spills, will any of the discharges described in Item III-A be intermittent or seasonal?

☒ Yes *(complete the following table)* ☐ No *(go to item IV)*

Outfall Number	1. Frequency		2. Flow		
	a. Days Per Week *(specify average)*	b. Months Per Year *(specify average)*	a. Maximum Daily Flow Rate *(in mgd)*	b. Maximum Total Volume *(specify with units)*	c. Duration *(in days)*
50-1-OPN-52	5	12	0.000002	2GPD	260 day/yr

IV. Production

If there is an applicable production-based effluent guideline or NSPS, for each outfall list the estimated level of production (projection of actual production level, not design), expressed in the terms and units used in the applicable effluent guideline or NSPS, for each of the first 3 years of operation. If production is likely to vary, you may also submit alternative estimates (attach a separate sheet).

Year	a. Quantity Per Day	b. Units of Measure	c. Operation, Product, Material, etc *(specify)*
			N/A

CONTINUE ON NEXT PAGE

CONTINUED FROM PAGE V-8

EPA I.D. NUMBER (copy from Item 1 of Page 1): NM0890010515

OUTFALL NUMBER: 04A

Form Approved. OMB No. 2040-0086 Approval expires 7-31-88

1. POLLUTANT AND CAS NUMBER (if available)	2. MARK "X" a. Believed Present	b. Believed Absent	c. Believed Absent	3. EFFLUENT a. MAXIMUM DAILY VALUE (1) Concentration	(2) Mass	b. MAXIMUM 30 DAY VALUE (if available) (1) Concentration	(2) Mass	c. LONG TERM AVRG. VALUE (if available) (1) Concentration	(2) Mass	d. NO. OF ANALYSES	4. UNITS a. Concentration	b. Mass	5. INTAKE (optional) a. LONG TERM AVERAGE VALUE (1) Concentration	(2) Mass	b. NO. OF ANALYSES
GC/MS FRACTION — PESTICIDES *(continued)*															
17P. Heptachlor Epoxide (1024-57-3)			X	< 0.04	< 0.3						ug/l	ug/d			
18P. PCB-1242 (53469-21-9)			X	< 0.68	< 5.1						ug/l	ug/d			
19P. PCB-1254 (11097-69-1)			X	< 0.68	< 5.1						ug/l	ug/d			
20P. PCB-1221 (11104-28-2)			X	N.D.											
21P. PCB-1232 (11141-16-5)			X	N.D.											
22P. PCB-1248 (12672-29-6)			X	N.D.											
23P. PCB-1260 (11096-82-5)			X	< 0.68	< 5.1						ug/l	ug/d			
24P. PCB-1016 (12674-11-2)			X	N.D.											
25P. Toxaphene (8001-35-2)			X	< 2.5	< 18.9						ug/l	ug/d			

☆ U.S. GOVERNMENT PRINTING OFFICE : 1986 0-491-161 (40174)

CONTINUED FROM THE FRONT	EPA ID Number (copy from Item 1 of Form 1)	Outfall Number
	NM0890010515	50-1-OPN-52

V. Effluent Characteristics

A, and B: These items require you to report estimated amounts *(both concentration and mass)* of the pollutants to be discharged from each of your outfalls. Each part of this item addresses a different set of pollutants and should be completed in accordance with the specific instructions for that part. Data for each outfall should be on a separate page. Attach additional sheets of paper if necessary.

General Instructions *(See table 2D-2 for Pollutants)*

Each part of this item requests you to provide an estimated daily maximum and average for certain pollutants and the source of information. Data for all pollutants in Group A, for all outfalls, must be submitted unless waived by the permitting authority. For all outfalls, data for pollutants in Group B should be reported only for pollutants which you believe will be present or are limited directly by an effluent limitations guideline or NSPS or indirectly through limitations on an indicator pollutant.

1. Pollutant	2. Maximum Daily Value *(include units)*	3. Average Daily Value *(include units)*	4. Source *(see instructions)*
See attached 04A datasheets			Best professional estimates

CONTINUED FROM THE FRONT	EPA ID Number (copy from Item 1 of Form 1) NM0890010515	

C. Use the space below to list any of the pollutants listed in Table 2D-3 of the instructions which you know or have reason to believe will be discharged from any outfall. For every pollutant you list, briefly describe the reasons you believe it will be present.

1. Pollutant	2. Reason for Discharge
N/A	

VI. Engineering Report on Wastewater Treatment

A. If there is any technical evaluation concerning your wastewater treatment, including engineering reports or pilot plant studies, check the appropriate box below.

[X] Report Available [ ] No Report Waste Stream Characterization Report #72

B. Provide the name and location of any existing plant(s) which, to the best of your knowledge, resembles this production facility with respect to production processes, wastewater constituents, or wastewater treatments.

Name	Location
N/A	

CONTINUE ON NEXT PAGE

EPA ID Number (copy from item one of Form 1)
NM0890010515

VII. Other Information (Optional)

Use the space below to expand upon any of the above questions or to bring to the attention of the reviewer any other information you feel should be considered in establishing permit limitations for the proposed facility. Attach additional sheets if necessary.

See attached 04A datasheets. Discharge is consistent with potable water.

VIII. Certification

I certify under penalty of law that this document and all attachments were prepared under my direction or supervision in accordance with a system designed to assure that qualified personnel properly gather and evaluate the information submitted. Based on my inquiry of the person or persons who manage the system, or those persons directly responsible for gathering the information, the information submitted is, to the best of my knowledge and belief, true, accurate, and complete. I am aware that there are significant penalties for submitting false information, including the possibility of fine and imprisonment for knowing violations.

A. Name and Official Title (type or print)	B. Phone No.
JERRY L. BELLOWS, AREA MANAGER, DOE	505-667-5105
ALLEN J. TIEDMAN, ASSOC. DIRECTOR FOR OPERATIONS	505-667-9390
C. Signature	D. Date Signed

☆U.S. Government Printing Office : 1990 : 491-181/52900

Data [illegible] worst case composite.

PLEASE PRINT OR TYPE IN THE UNSHADED AREAS ONLY. You may report some or all of this information on separate sheets *(use the same format)* instead of completing these pages. SEE INSTRUCTIONS.

EPA I.D. NUMBER *(copy from Item 1 of Form 1)*: NM0890010515

Form Approved. OMB No. 2040-0086. Approval expires 7-31-88

V. INTAKE AND EFFLUENT CHARACTERISTICS *(continued from page 3 of Form 2-C)*

OUTFALL NO. 04A

PART A - You must provide the results of at least one analysis for every pollutant in this table. Complete one table for each outfall. See instructions for additional details.

1. POLLUTANT	2. EFFLUENT a. MAXIMUM DAILY VALUE (1) CONCENTRATION	(2) MASS	b. MAXIMUM 30 DAY VALUE (if available) (1) CONCENTRATION	(2) MASS	c. LONG TERM AVG. VALUE (if available) (1) CONCENTRATION	(2) MASS	d. NO. OF ANALYSES	3. UNITS (specify if blank) a. CONCENTRATION	b. MASS	4. INTAKE (optional) a. LONG TERM AVERAGE VALUE (1) CONCENTRATION	(2) MASS	b. NO. OF ANALYSES
a. Biochemical Oxygen Demand (BOD)	< 2.0	< 15.1						mg/l	g/d			
b. Chemical Oxygen Demand (COD)	< 10.0	< 75.7						mg/l	g/d			
c. Total Organic Carbon (TOC)	0.6	4.5						mg/l	g/d			
d. Total Suspended Solids (TSS)	18.0	0.1						mg/l	g/d			
e. Ammonia (as N)	< 0.1	< 0.757						mg/l	g/d			
f. Flow	VALUE 2		VALUE		VALUE			gal/day		VALUE		
g. Temperature (winter)	VALUE 13.9		VALUE		VALUE			°C		VALUE		
h. Temperature (summer)	VALUE N/A		VALUE		VALUE			°C		VALUE		
i. pH	MINIMUM 8.45	MAXIMUM 8.80	MINIMUM	MAXIMUM				STANDARD UNITS				

PART B - Mark "X" in column 2-a for each pollutant you know or have reason to believe is present. Mark "X" in column 2-b for each pollutant you believe to be absent. If you mark column 2a for any pollutant which is limited either directly, or indirectly but expressly, in an effluent limitations guideline, you must provide the results of at least one analysis for that pollutant. For other pollutants for which you mark column 2a, you must provide quantitative data or an explanation of their presence in your discharge. Complete one table for each outfall. See the instructions for additional details and requirements.

1. POLLUTANT AND CAS NO. (if available)	2. MARK "X" a. PRESENT	b. ABSENT	3. EFFLUENT a. MAXIMUM DAILY VALUE (1) CONCENTRATION	(2) MASS	b. MAXIMUM 30 DAY VALUE (if available) (1) CONCENTRATION	(2) MASS	c. LONG TERM AVG. VALUE (if available) (1) CONCENTRATION	(2) MASS	d. NO. OF ANALYSES	4. UNITS a. CONCENTRATION	b. MASS	5. INTAKE (optional) a. LONG TERM AVERAGE VALUE (1) CONCENTRATION	(2) MASS	b. NO. OF ANALYSES
a. Bromide (24959-67-9)		X	< 0.5	< 3.8						mg/l	g/d			
b. Chlorine, Total Residual	X		0.05	0.0						mg/l	mg/d			
c. Color	X		7.0							units				
d. Fecal Coliform		X												
e. Fluoride (16984-48-8)	X		0.21	1.6						mg/l	g/d			
f. Nitrate-Nitrite (as N)	X		0.304	2.3						mg/l	g/d			

CONTINUE ON REVERSE

ITEM V-B CONTINUED FROM FRONT

1. POLLUTANT AND CAS NO. (If available)	2. MARK "X" a. PRESENT	b. ABSENT	3. EFFLUENT a. MAXIMUM DAILY VALUE (1) CONCENTRATION	(2) MASS	b. MAXIMUM 30 DAY VALUE (if available) (1) CONCENTRATION	(2) MASS	c. LONG TERM AVG. VALUE (if available) (1) CONCENTRATION	(2) MASS	d. NO. OF ANALYSES	4. UNITS a. CONCENTRATION	b. MASS	5. INTAKE (optional) a. LONG TERM AVERAGE VALUE (1) CONCENTRATION	(2) MASS	b. NO. OF ANALYSES
g. Nitrogen, Total Organic (as N)		X	< 0.5	< 3.8						mg/l	mg/d			
h. Oil and Grease		X	< 1.05	< 7.9						mg/l	mg/d			
i. Phosphorus (as P), Total (7723-14-0)	X		0.05	0.4						mg/l	mg/d			
j. Radioactivity														
(1) Alpha, Total	X		0.1	0.8						pCi/l	pCi/d			
(2) Beta, Total	X		6.6	50.0						pCi/l	pCi/d			
(3) Radium, Total	X													
(4) Radium 226, Total	X		0.06	0.5						pCi/l	pCi/d			
k. Sulfate (as SO_4) (14808-79-8)	X		3.16	23.9						mg/l	mg/d			
l. Sulfide (as S)		X		0.0						mg/l	mg/d			
m. Sulfite (as SO_3) (14265-45-3)		X	< 0.05	< 0.4						mg/l	mg/d			
n. Surfactants		X	< 0.1	< 0.8						mg/l	mg/d			
o. Aluminum, Total (7429-90-5)		X	< 0.04	< 0.3						mg/l	mg/d			
p. Barium, Total (7440-39-3)	X		0.03	0.2						mg/l	mg/d			
q. Boron, Total (7440-42-8)	X		0.02	0.2						mg/l	mg/d			
r. Cobalt, Total (7440-48-4)		X	< 0.1	< 0.8						mg/l	mg/d			
s. Iron, Total (7439-89-6)	X		0.41	3.1						mg/l	mg/d			
t. Magnesium, Total (7439-96-4)	X		2.5	18.9						mg/l	mg/d			
u. Molybdenum, Total (7439-98-7)		X	< 0.02	< 0.2						mg/l	mg/d			
v. Manganese, Total (7439-96-5)	X		0.01	0.1						mg/l	mg/d			
w. Tin, Total (7440-31-5)		X	< 0.050	< 0.4						mg/l	mg/d			
x. Titanium, Total (7440-32-6)		X	< 0.004	< 0.0						mg/l	mg/d			

CONTINUE ON PAGE V-3

EPA I.D. NUMBER (copy from Item 1 of Form 1)	OUTFALL NUMBER
NM0890010515	04A

Form Approved.
OMB No. 2040-0086
Approval expires 7-31-88

CONTINUED FROM PAGE 3 OF FORM 2-C

PART C - If you are a primary industry and this outfall contains process wastewater, refer to Table 2c-2 in the instructions to determine which of the GC/MS fractions you must test for. Mark "X" in column 2-a for all such GC/MS fractions that apply to your industry and for ALL toxic metals, cyanides, and total phenols. If you are not required to mark column 2-a *(secondary industries, nonprocess wastewater outfalls, and nonrequired GC/MS fractions)*, mark "X" in column 2-b for each pollutant you know or have reason to believe is present. Mark "X" in column 2-c for each pollutant you believe is absent. If you mark column 2a for any pollutant, you must provide the results of at least one analysis for that pollutant. If you mark column 2b for any pollutant, you must provide the results of at least one analysis for that pollutant if you know or have reason to believe it will be discharged in concentrations of 10 ppb or greater. If you mark column 2b for acrolein, acrylonitrile, 2,4 dinitrophenol, or 2-methyl-4, 6 dinitrophenol, you must provide the results of at least one analysis for each of these pollutants which you know or have reason to believe that you discharge in concentrations of 100 ppb or greater. Otherwise, for pollutants for which you mark column 2b, you must either submit at least one analysis or briefly describe the reasons the pollutant is expected to be discharged. Note that there are 7 pages to this part; please review each carefully. Complete one table *(all 7 pages)* for each outfall. See instructions for additional details and requirements.

1. POLLUTANT AND CAS NUMBER (if available)	2. MARK "X"			3. EFFLUENT							4. UNITS		5. INTAKE (optional)		
	a. TEST AND BELIEVED PRESENT	b. BELIEVED PRESENT	c. BELIEVED ABSENT	a. MAXIMUM DAILY VALUE (1) CONCENTRATION	a. MAXIMUM DAILY VALUE (2) MASS	b. MAXIMUM 30 DAY VALUE (if available) (1) CONCENTRATION	b. MAXIMUM 30 DAY VALUE (if available) (2) MASS	c. LONG TERM AVRG. VALUE (if available) (1) CONCENTRATION	c. LONG TERM AVRG. VALUE (if available) (2) MASS	d. NO. OF ANALYSES	a. CONCENTRATION	b. MASS	a. LONG TERM AVERAGE VALUE (1) CONCENTRATION	a. LONG TERM AVERAGE VALUE (2) MASS	b. NO. OF ANALYSES
METALS, CYANIDE, AND TOTAL PHENOLS															
1M. Antimony, Total (7440-36-0)			X	< 0.050	< 0.4						mg/l	mg/d			
2M. Arsenic, Total (7440-38-2)		X		0.002	0.0						mg/l	mg/d			
3M. Beryllium, Total, 7440-41-7)			X	< 0.001	< 0.00						mg/l	mg/d			
4M. Cadmium, Total (7440-43-9)			X	< 0.010	< 0.1						mg/l	mg/d			
5M. Chromium, Total (7440-47-3)		X		0.040	0.3						mg/l	mg/d			
6M Copper, Total (7440-50-8)		X		0.031	0.2						mg/l	mg/d			
7M. Lead, Total (7439-92-1)			X	< 0.050	< 0.4						mg/l	mg/d			
8M. Mercury, Total (7439-97-6)			X	< 0.0002	< 0.00						mg/l	mg/d			
9M. Nickel, Total (7440-02-0)		X		0.06	0.5						mg/l	mg/d			
10M. Selenium, Total (7782-49-2)			X	< 0.001	< 0.00						mg/l	mg/d			
11M. Silver, Total (7440-22-4)			X	< 0.010	< 0.1						mg/l	mg/d			
12M. Thallium, Total (7440-28-0)			X	< 0.4	< 3.0						mg/l	mg/d			
13M. Zinc, Total (7440-66-6)		X		0.043	0.3						mg/l	mg/d			
14M. Cyanide, Total (57-12-5)			X	0.01	0.1						mg/l	mg/d			
15M. Phenols, Total			X	< 0.01	< 0.1						mg/l	mg/d			
DIOXIN															
2,3,7,8-Tetrachlorodibenzo-P-Dioxin (1764-01-6)			X	DESCRIBE RESULTS											

CONTINUE ON REVERSE

CONTINUED FROM THE FRONT

1. POLLUTANT AND CAS NUMBER (if available)	2. MARK "X" a. TEST INFO REQUIRED	b. BELIEVED PRESENT	c. BELIEVED ABSENT	3. EFFLUENT a. MAXIMUM DAILY VALUE (1) CONCENTRATION	(2) MASS	b. MAXIMUM 30 DAY VALUE (if available) (1) CONCENTRATION	(2) MASS	c. LONG TERM AVRG. VALUE (if available) (1) CONCENTRATION	(2) MASS	d. NO. OF ANALYSES	4. UNITS a. CONCENTRATION	b. MASS	5. INTAKE (optional) a. LONG TERM AVERAGE VALUE (1) CONCENTRATION	(2) MASS	b. NO. OF ANALYSES
GC/MS FRACTION – VOLATILE COMPOUNDS															
V. Acrolein (107-02-8)			X												
V. Acrylonitrile (107-13-1)			X												
V. Benzene (71-43-2)			X	< 0.005	< 0.0						mg/l	mg/d			
V. Bis (Chloromethyl) Ether (542-88-1)			X												
V. Bromoform (75-25-2)			X	< 0.005	< 0.0						mg/l	mg/d			
V. Carbon Tetrachloride (56-23-5)			X	< 0.005	< 0.0						mg/l	mg/d			
V. Chlorobenzene (108-90-7)			X	< 0.005	< 0.0						mg/l	mg/d			
V. Chlorodibromomethane (124-48-1)			X	< 0.005	< 0.0						mg/l	mg/d			
V. Chloroethane (75-00-3)			X	< 0.010	< 0.0000						mg/l	mg/d			
0V. 2-Chloroethylvinyl Ether (110-75-8)			X												
1V. Chloroform (67-66-3)			X	< 0.005	< 0.0						mg/l	mg/d			
2V. Dichlorobromomethane (75-27-4)			X	< 0.005	< 0.0						mg/l	mg/d			
3V. Dichlorodifluoromethane (75-71-8)			X												
4V. 1,1-Dichloroethane (75-34-3)			X	< 0.005	< 0.0						mg/l	mg/d			
5V. 1,2-Dichloroethane (107-06-2)			X	< 0.005	< 0.0						mg/l	mg/d			
6V. 1,1-Dichloroethylene (75-35-4)			X	< 0.005	< 0.0						mg/l	mg/d			
7V. 1,2-Dichloropropane (78-87-5)			X	< 0.005	< 0.0						mg/l	kg/d			
8V. 1,3-Dichloropropylene (542-75-6)			X	<	< 0.0						mg/l	mg/d			
9V. Ethylbenzene (100-41-4)			X	< 0.005	< 0.0						mg/l	mg/d			
0V. Methyl Bromide (74-83-9)			X	< 0.010	< 0.1						mg/l	mg/d			
1V. Methyl Chloride (74-87-3)			X	< 0.010	< 0.1						mg/l	mg/d			

CONTINUE ON PAGE V-5

CONTINUED FROM PAGE V-4

EPA I.D. NUMBER (copy from Item 1 of Form 1): NM0890010515

OUTFALL NUMBER: 04A

OMB No. 2040-0086
Approval expires 7-31-88

1. POLLUTANT AND CAS NUMBER (if available)	2. MARK "X" a. Believed Present	b. Believed Absent	c. Analyzed	3. EFFLUENT a. MAXIMUM DAILY VALUE (1) Concentration	(2) Mass	b. MAXIMUM 30 DAY VALUE (if available) (1) Concentration	(2) Mass	c. LONG TERM AVRG. VALUE (if available) (1) Concentration	(2) Mass	d. NO. OF ANALYSES	4. UNITS a. CONCENTRATION	b. MASS	5. INTAKE (optional) a. LONG TERM AVERAGE VALUE (1) Concentration	(2) Mass	b. NO. OF ANALYSES
GC/MS FRACTION – VOLATILE COMPOUNDS (continued)															
22V. Methylene Chloride (75-09-2)			X	< 0.005	< 0.0						mg/l	mg/d			
23V. 1,1,2,2-Tetrachloroethane (79-34-5)			X	< 0.005	< 0.0						mg/l	mg/d			
24V. Tetrachloroethylene (127-18-4)			X	< 0.005	< 0.0						mg/l	mg/d			
25V. Toluene (108-88-3)			X	< 0.005	< 0.0						mg/l	mg/d			
26V. 1,2-Trans Dichloroethylene (156-60-5)			X	< 0.005	< 0.0						mg/l	mg/d			
27V. 1,1,1-Trichloroethane (71-55-6)			X	< 0.005	< 0.0						mg/l	mg/d			
28V. 1,1,2-Trichloroethane (79-00-5)			X	< 0.005	< 0.0						mg/l	mg/d			
29V. Trichloroethylene (79-01-6)			X	< 0.005	< 0.0						mg/l	mg/d			
30V. Trichlorofluoromethane (75-69-4)			X	< 0.005	< 0.0						mg/l	mg/d			
31V. Vinyl Chloride (75-01-4)			X	< 0.010	< 0.1						mg/l	mg/d			
GC/MS FRACTION – ACID COMPOUNDS															
1A. 2-Chlorophenol (95-57-8)			X	< 0.010	< 0.1						mg/l	mg/d			
2A. 2,4-Dichlorophenol (120-83-2)			X	< 0.010	< 0.1						mg/l	mg/d			
3A. 2,4-Dimethylphenol (105-67-9)			X	< 0.010	< 0.1						mg/l	mg/d			
4A. 4,6-Dinitro-O-Cresol (534-52-1)			X	< 0.010	< 0.1						mg/l	mg/d			
5A. 2,4-Dinitrophenol (51-28-5)			X	< 0.010	< 0.1						mg/l	mg/d			
6A. 2-Nitrophenol (88-75-5)			X	< 0.010	< 0.1						mg/l	mg/d			
7A. 4-Nitrophenol (100-02-7)			X	< 0.010	< 0.1						mg/l	mg/d			
8A. P-Chloro M-Cresol (59-50-7)			X	< 0.010	< 0.1						mg/l	mg/d			
9A. Pentachlorophenol (87-86-5)			X	< 0.010	< 0.1						mg/l	mg/d			
10A. Phenol (108-95-2)			X	< 0.010	< 0.1						mg/l	mg/d			
11A. 2,4,6-Trichlorophenol (88-06-2)			X	< 0.010	< 0.1						mg/l	mg/d			

CONTINUE ON REVERSE

CONTINUED FROM THE FRONT

1. POLLUTANT AND CAS NUMBER (if available)	2. MARK "X" a. Testing required	b. Believed present	c. Believed absent	3. EFFLUENT a. MAXIMUM DAILY VALUE (1) Concentration	(2) Mass	b. MAXIMUM 30 DAY VALUE (if available) (1) Concentration	(2) Mass	c. LONG TERM AVRG. VALUE (if available) (1) Concentration	(2) Mass	d. NO. OF ANALYSES	4. UNITS a. CONCENTRATION	b. MASS	5. INTAKE (optional) a. LONG TERM AVERAGE VALUE (1) Concentration	(2) Mass	b. NO. OF ANALYSES
GC/MS FRACTION – BASE/NEUTRAL COMPOUNDS															
1B. Acenaphthene (83-32-9)			X	< 0.010	< 0.1						mg/l	mg/d			
2B. Acenaphtylene (208-96-8)			X	< 0.010	< 0.1						mg/l	mg/d			
3B. Anthracene (120-12-7)			X	< 0.010	< 0.1						mg/l	mg/d			
4B. Benzidine (92-87-5)			X	< 0.010	< 0.1						mg/l	mg/d			
5B. Benzo (a) Anthracene (56-55-3)			X	< 0.010	< 0.1						mg/l	mg/d			
6B. Benzo (a) Pyrene (50-32-8)			X	< 0.010	< 0.1						mg/l	mg/d			
7B. 3,4-Benzo-fluoranthene (205-99-2)			X	< 0.010	< 0.1						mg/l	mg/d			
8B. Benzo (ghi) Perylene (191-24-2)			X	< 0.010	< 0.1						mg/l	mg/d			
9B. Benzo (k) Fluoranthene (207-08-9)			X	< 0.010	< 0.1						mg/l	mg/d			
10B. Bis (2 Chloro-ethoxy) Methane (111-91-1)			X	< 0.010	< 0.1						mg/l	mg/d			
11B. Bis (2 Chloro-ethyl) Ether (111-44-4)			X	< 0.010	< 0.1						mg/l	mg/d			
12B. Bis (2-Chloro-propyl) Ether (102-60-1)			X	< 0.010	< 0.1						mg/l	mg/d			
13B. Bis (2-Ethyl-hexyl) Phthalate (117-81-7)			X	< 0.010	< 0.1						mg/l	mg/d			
14B. 4 Bromo-phenyl Phenyl Ether (101-55-3)			X	< 0.010	< 0.1						mg/l	mg/d			
15B. Butyl Benzyl Phthalate (85-68-7)			X	< 0.010	< 0.1						mg/l	mg/d			
16B. 2 Chloro-naphthalene (91-58-7)			X	< 0.010	< 0.1						mg/l	mg/d			
17B. 4 Chloro-phenyl Phenyl Ether (7005-72-3)			X	< 0.010	< 0.1						mg/l	mg/d			
18B. Chrysene (218-01-9)			X	< 0.010	< 0.1						mg/l	mg/d			
19B. Dibenzo (a,h) Anthracene (53-70-3)			X	< 0.010	< 0.1						mg/l	mg/d			
20B. 1,2 Dichloro-benzene (95-50-1)			X	< 0.010	< 0.1						mg/l	mg/d			
21B. 1,3 Dichloro-benzene (541-73-1)			X	< 0.010	< 0.1						mg/l	mg/d			

CONTINUE ON PAGE V-7

CONTINUED FROM PAGE V-6

EPA I.D. NUMBER (copy from Item 1 of F
NM0890010515

OUTFALL NUMBER
04A

Form Approved.
OMB No. 2040-0086
Approval expires 7-31-88

1. POLLUTANT AND CAS NUMBER (if available)	2. MARK "X" a. Test and Reasonable Grounds	b. Believed Present	c. Believed Absent	3. EFFLUENT a. MAXIMUM DAILY VALUE (1) Concentration	(2) Mass	b. MAXIMUM 30 DAY VALUE (if available) (1) Concentration	(2) Mass	c. LONG TERM AVRG. VALUE (if available) (1) Concentration	(2) Mass	d. NO. OF ANALYSES	4. UNITS a. Concentration	b. Mass	5. INTAKE (optional) a. LONG TERM AVERAGE VALUE (1) Concentration	(2) Mass	b. NO. OF ANALYSES
GC/MS FRACTION – BASE/NEUTRAL COMPOUNDS (continued)															
22B. 1,4-Dichlorobenzene (106-46-7)			X	< 0.010	< 0.1						mg/l	mg/d			
23B. 3,3'-Dichlorobenzidine (91-94-1)			X	< 0.010	< 0.1						mg/l	mg/d			
24B. Diethyl Phthalate (84-66-2)			X	< 0.010	< 0.1						mg/l	mg/d			
25B. Dimethyl Phthalate (131-11-3)			X	< 0.010	< 0.1						mg/l	mg/d			
26B. Di-N-Butyl Phthalate (84-74-2)			X	< 0.010	< 0.1						mg/l	mg/d			
27B. 2,4-Dinitrotoluene (121-14-2)			X	< 0.010	< 0.1						mg/l	mg/d			
28B. 2,6-Dinitrotoluene (606-20-2)			X	< 0.010	< 0.1						mg/l	mg/d			
29B. Di-N-Octyl Phthalate (117-84-0)			X	< 0.010	< 0.1						mg/l	mg/d			
30B. 1,2-Diphenylhydrazine (as Azobenzene) (122-66-7)			X	< 0.010	< 0.1						mg/l	mg/d			
31B. Fluoranthene (206-44-0)			X	< 0.010	< 0.1						mg/l	mg/d			
32B. Fluorene (86-73-7)			X	< 0.010	< 0.1						mg/l	mg/d			
33B. Hexachlorobenzene (118-74-1)			X	< 0.010	< 0.1						mg/l	mg/d			
34B. Hexachlorobutadiene (87-68-3)			X	< 0.010	< 0.1						mg/l	mg/d			
35B. Hexachlorocyclopentadiene (77-47-4)			X	< 0.010	< 0.1						mg/l	mg/d			
36B. Hexachloroethane (67-72-1)			X	< 0.010	< 0.1						mg/l	mg/d			
37B. Indeno (1,2,3-cd) Pyrene (193-39-5)			X	< 0.010	< 0.1						mg/l	mg/d			
38B. Isophorone (78-59-1)			X	< 0.010	< 0.1						mg/l	mg/d			
39B. Naphthalene (91-20-3)			X	< 0.010	< 0.1						mg/l	mg/d			
40B. Nitrobenzene (98-95-3)			X	< 0.010	< 0.1						mg/l	mg/d			
41B. N-Nitrosodimethylamine (62-75-9)			X	< 0.010	< 0.1						mg/l	mg/d			
42B. N-Nitrosodi-N-Propylamine (621-64-7)			X	< 0.010	< 0.1						mg/l	mg/d			

CONTINUE ON REVERSE

CONTINUED FROM THE FRONT

1. POLLUTANT AND CAS NUMBER (if available)	2. MARK "X" a. TREATMENT REQUIRED	b. BELIEVED PRESENT	c. BELIEVED ABSENT	3. EFFLUENT a. MAXIMUM DAILY VALUE (1) CONCENTRATION	(2) MASS	b. MAXIMUM 30 DAY VALUE (if available) (1) CONCENTRATION	(2) MASS	c. LONG TERM AVRG. VALUE (if available) (1) CONCENTRATION	(2) MASS	d. NO. OF ANALYSES	4. UNITS a. CONCENTRATION	b. MASS	5. INTAKE (optional) a. LONG TERM AVERAGE VALUE (1) CONCENTRATION	(2) MASS	b. NO. OF ANALYSES
GC/MS FRACTION — BASE/NEUTRAL COMPOUNDS (continued)															
38. N-Nitrosodiphenylamine (86-30-6)			X	< 0.010	< 0.1						mg/l	mg/d			
39. Phenanthrene (85-01-8)			X	< 0.010	< 0.1						mg/l	mg/d			
40. Pyrene (129-00-0)			X	< 0.010	< 0.1						mg/l	mg/d			
41. 1,2,4-Trichlorobenzene (120-82-1)			X	< 0.010	< 0.1						mg/l	mg/d			
GC/MS FRACTION — PESTICIDES															
1P. Aldrin (309-00-2)			X	< 0.06	< 0.5						ug/l	ug/d			
2P. α-BHC (319-84-6)			X	< 0.02	< 0.2						ug/l	ug/d			
3P. β-BHC (319-85-7)			X	< 0.1	< 0.8						ug/l	ug/d			
4P. γ-BHC (58-89-9)			X	< 0.03	< 0.2						ug/l	ug/d			
5P. δ-BHC (319-86-8)			X	< 0.12	< 0.9						ug/l	ug/d			
6P. Chlordane (57-74-9)			X	< 0.25	< 1.9						ug/l	ug/d			
7P. 4,4'-DDT (50-29-3)			X	< 0.06	< 0.5						ug/l	ug/d			
8P. 4,4'-DDE (72-55-9)			X	< 0.08	< 0.6						ug/l	ug/d			
9P. 4,4'-DDD (72-54-8)			X	< 0.08	< 0.6						ug/l	ug/d			
10P. Dieldrin (60-57-1)			X	< 0.08	< 0.6						ug/l	ug/d			
11P. α-Endosulfan (115-29-7)			X	< 0.05	< 0.4						ug/l	ug/d			
12P. β-Endosulfan (115-29-7)			X	< 0.08	< 0.6						ug/l	ug/d			
13P. Endosulfan Sulfate (1031-07-8)			X	< 0.09	< 0.7						ug/l	ug/d			
14P. Endrin (72-20-8)			X	< 0.06	< 0.5						ug/l	ug/d			
15P. Endrin Aldehyde (7421-93-4)			X	< 0.62	< 4.7						ug/l	ug/d			
16P. Heptachlor (76-44-8)			X	< 0.3	< 2.3						ug/l	ug/d			

CONTINUE ON PAGE V-9

DYE STUDY INFORMATION

BUILDING NUMBER	DRAIN NUMBER	DID DYE REACH EXPECTED DESTINATION?	COMMENTS
50-1	BTL1	YES	50-1-OPN-1 SANITARY
50-1	BTL2	YES	50-1-OPN-1 SANITARY
50-1	BFD6	YES	50-1-OPN-2 SANITARY
50-1	BFD27	YES	50-1-OPN-2 SANITARY
50-1	BTL3	YES	50-1-OPN-2 SANITARY
50-1	BTL4	YES	50-1-OPN-2 SANITARY
50-1	1TL2	YES	50-1-OPN-2 SANITARY
50-1	1TL3	YES	50-1-OPN-2 SANITARY
50-1	BSD26	YES	50-1-OPN-3 SANITARY
50-1	BSD5	YES	RLW TESTED BY ABSENCE OF DYE IN SS OR DAYLIGHT OUTFALL
50-1	BSD13	YES	RLW TESTED BY ABSENCE OF DYE IN SS OR DAYLIGHT OUTFALL
50-1	PFD1	YES	50-1-OPN-52 STORM DRAIN
50-37	1TL1	YES	50-37-OPN-1 SANITARY
50-37	1FD4	YES	50-37-OPN-2 SANITARY
50-37	1SD2	YES	50-37-OPN-2 SANITARY
50-37	1TL3	YES	50-37-OPN-2 SANITARY
50-37	1TL4	YES	50-37-OPN-2 SANITARY
50-37	2TL1	YES	50-37-OPN-2 SANITARY
50-37	2TL2	YES	50-37-OPN-2 SANITARY
50-37	1SD4	YES	RLW TESTED BY ABSENCE OF DYE IN SS OR DAYLIGHT OUTFALL
50-54	1TL1	YES	50-54-OPN-1 SANITARY
50-69	1TL1	YES	50-69-OPN-1 SANITARY
50-69	1LV1	YES	RLW TESTED BY ABSENCE OF DYE IN SS OR DAYLIGHT OUTFALL
50-84	1TL1	YES	50-84-OPN-1 SANITARY
50-84	1TL2	YES	50-84-OPN-1 SANITARY

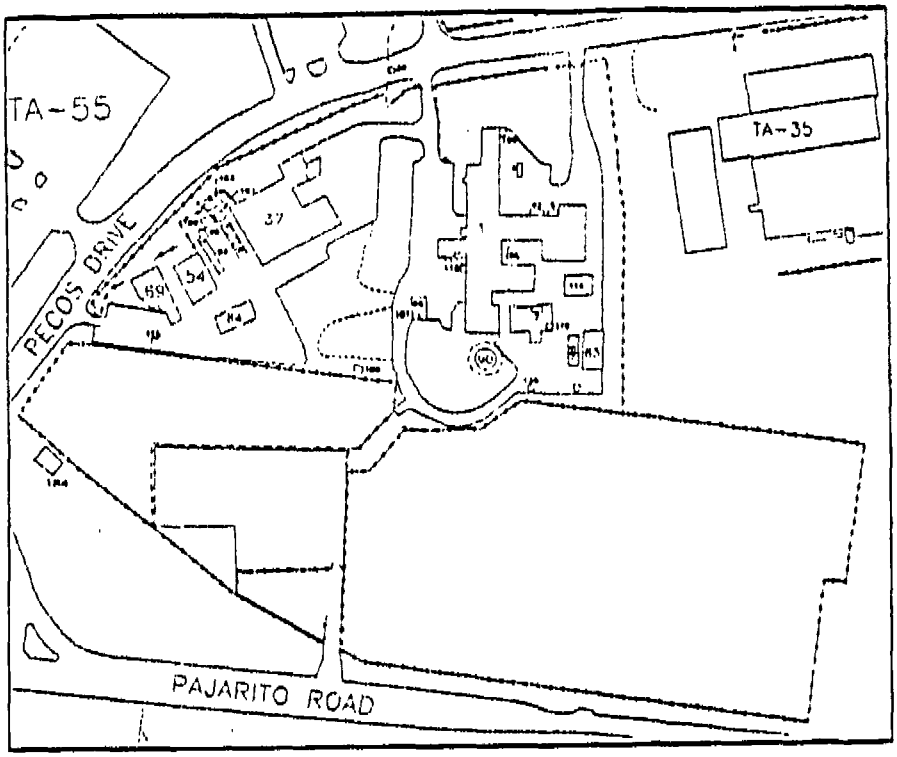

SITE PLAN

- NOT TO SCALE -

SANTA FE ENGINEERING, LTD.

TA-50
SITE PLAN

LOS ALAMOS

11 UNE 72

FIGURE 1

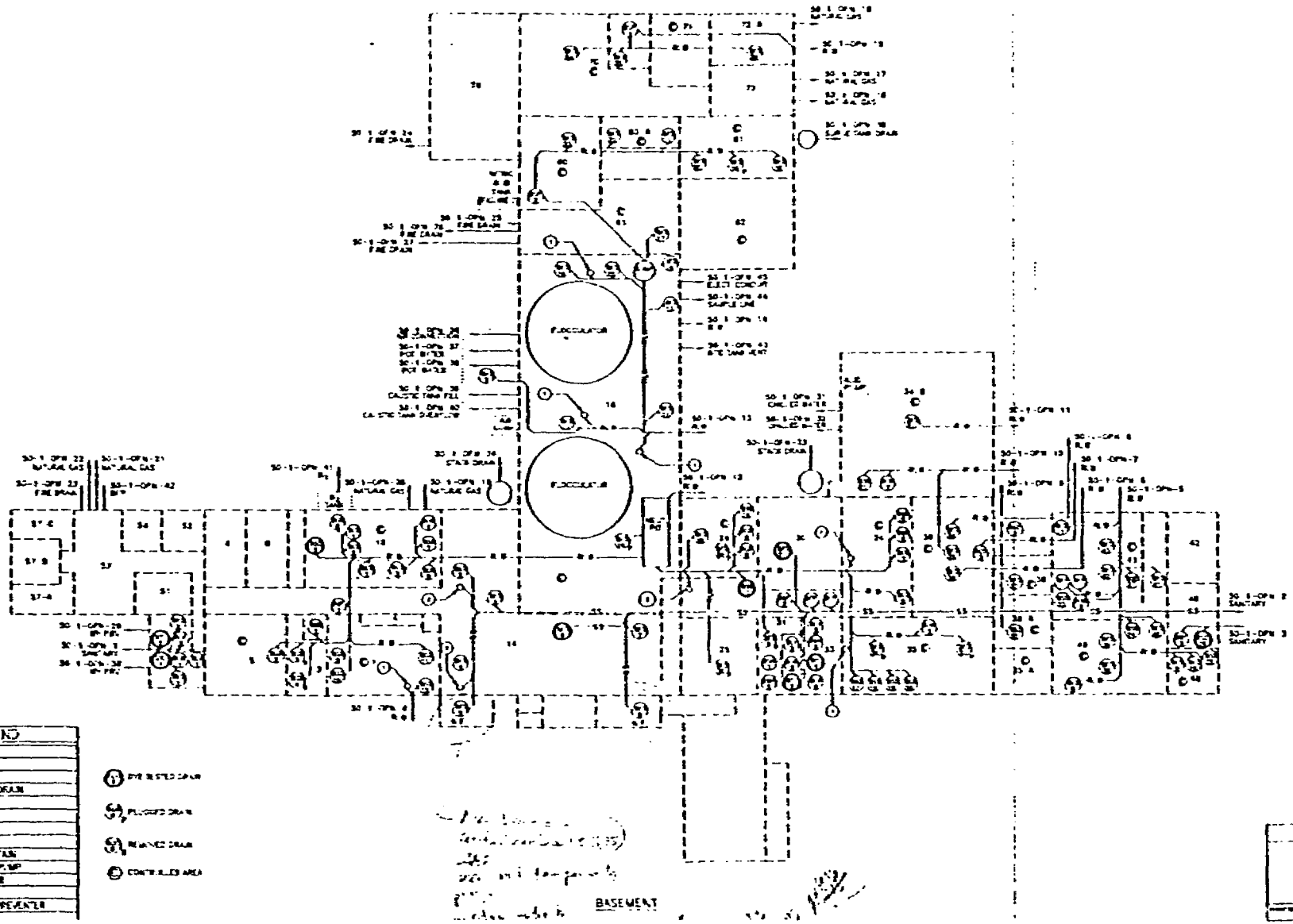

KEYED NOTES:

POL LEGEND

FLOOR DRAIN
CLR DRAIN
SINK DRAIN
EQUIPMENT DRAIN
TOILET
LAVATORY
URINAL
SHOWER
WATER FOUNTAIN
SUMP PUMP
WATER HEATER
BOILER
BACK FLOW PREVENTER

SANTA FE ENGINEERING, LTD

TA-50-1
BASEMENT
DRAIN SCHEMATIC

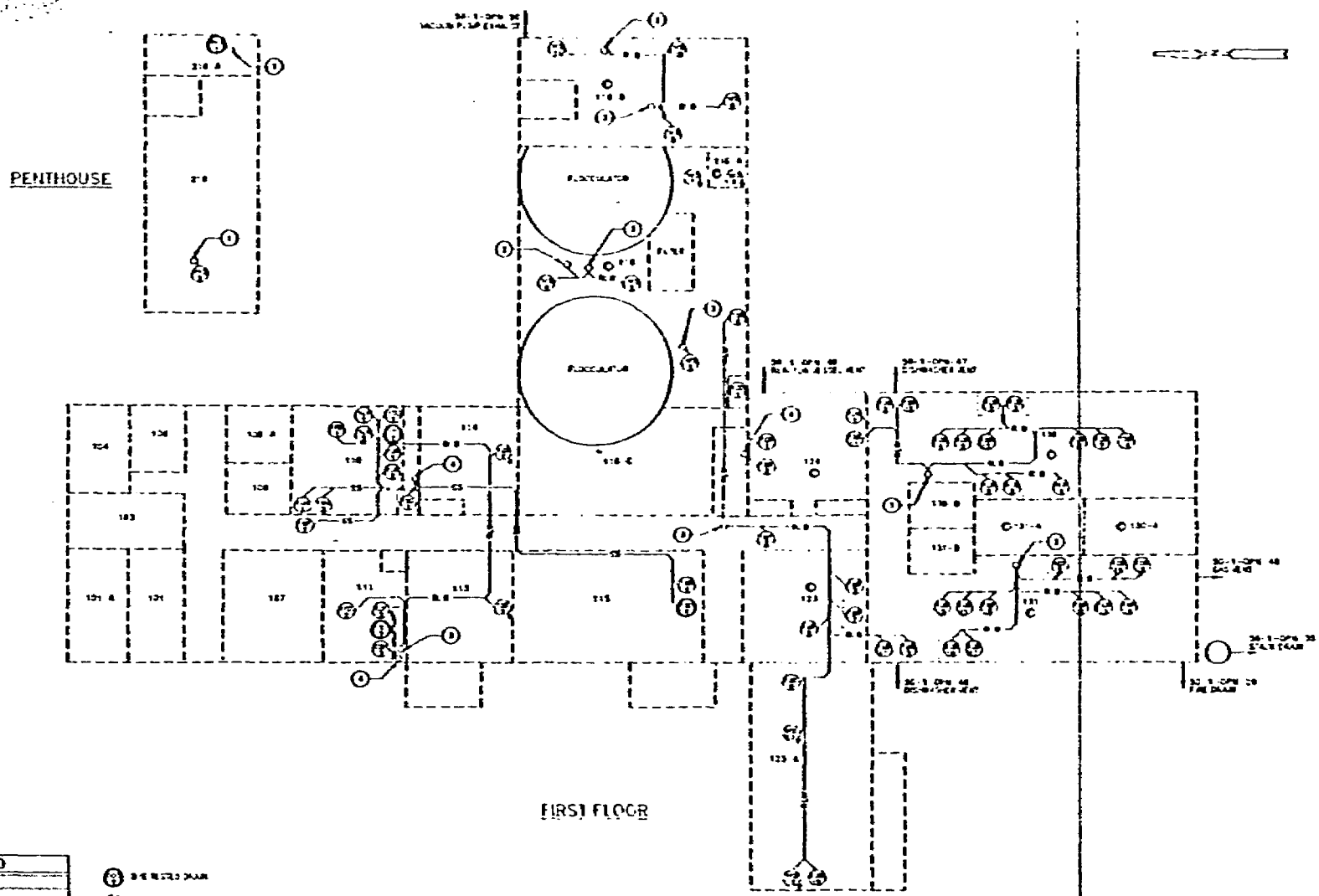

KEYED NOTES:

1	[illegible]
2	[illegible]
3	[illegible]
4	[illegible]

1	[illegible]
2	[illegible]
3	[illegible]
4	[illegible]

SOIL LEGEND

FLOOR DRAIN	
SINK DRAIN	
EQUIPMENT DRAIN	
OUTLET	
SANITARY	
[illegible]	
SEWER	
WATER FOUNTAIN	
ROOF DRAIN	
DISCHARGE	
SANITARY SEWER	

[illegible] DRAIN

PLUGGED DRAIN

REMOVED DRAIN

CONTROLLED AREA

SANTA FE ENGINEERING, LTD.

TA-50-1
FIRST FLOOR
DRAIN SCHEMATIC

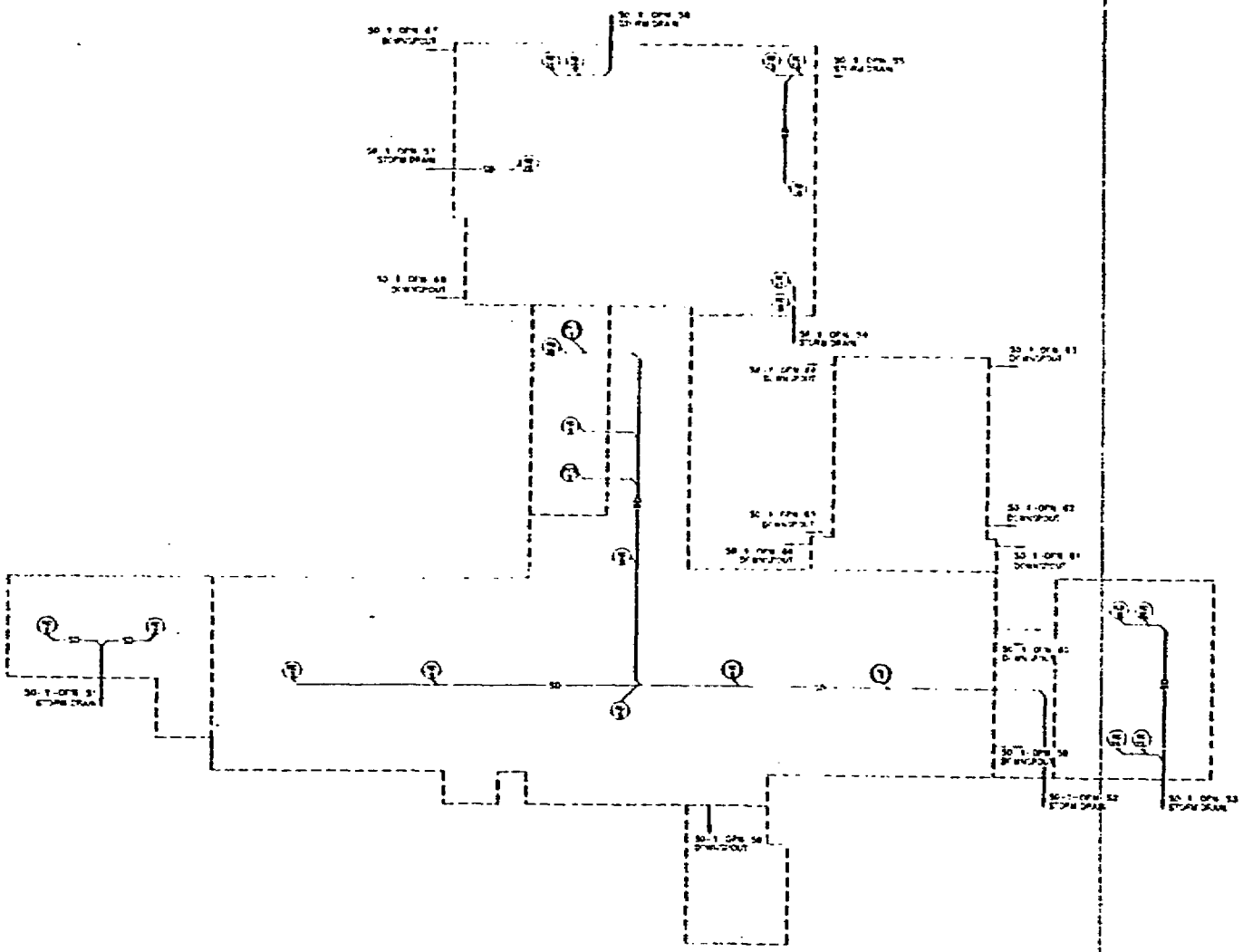

LEGEND

SANTA FE ENGINEERING LTD

TA-50-1
STORM DRAIN
SCHEMATICS

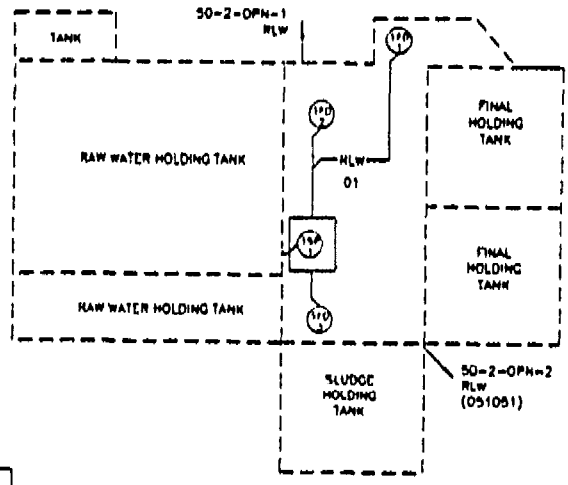

SYMBOL LEGEND	
FD	FLOOR DRAIN
SP	SUMP PUMP
— RLW —	RADIOACTIVE LIQUID WASTE

SANTA FE ENGINEERING, LTD.

TA-50-2
DRAIN SCHEMATIC

Los Alamos

11056-72 FIGURE 5

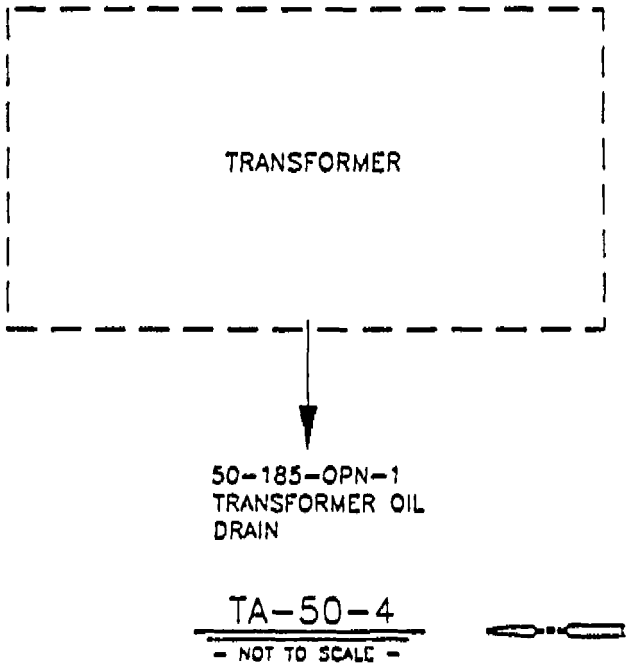

SANTA FE ENGINEERING, LTD.			
TA-50-4 DRAIN SCHEMATIC		DRAWN	G.S.
		DESIGN	D.R.S.
		CHECKED	P.C.B.
		DATE	5-25-93
SUBMITTED	RECOMMENDED	APPROVED	
Los Alamos	Los Alamos National Laboratory Los Alamos, New Mexico 87545	SHEET	OF
CLASSIFICATION	REVIEWER	DATE	
REQUESTING DIVISION	LAB JOB.NO.	DRAWING NO.	REV.
REQUESTING GROUP EM-8	11056-72	FIGURE 6	

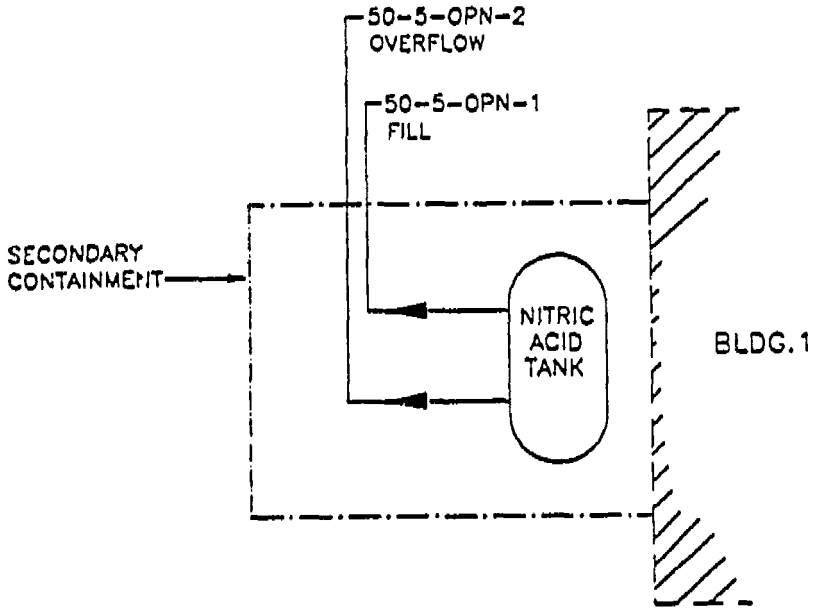

TA-50-5

- NOT TO SCALE -

SANTA FE ENGINEERING, LTD.			
TA-50-5 DRAIN SCHEMATIC		DRAWN	G.S.
		DESIGN	D.R.S.
		CHECKED	P.C.B.
		DATE	5-25-93
SUBMITTED	RECOMMENDED	APPROVED	
Los Alamos	Los Alamos National Laboratory Los Alamos, New Mexico 87545	SHEET	OF
CLASSIFICATION	REVIEWER	DATE	
REQUESTING DIVISION	LAB JOB NO.	DRAWING NO.	REV.
REQUESTING GROUP EM-8	11056-72	FIGURE 7	

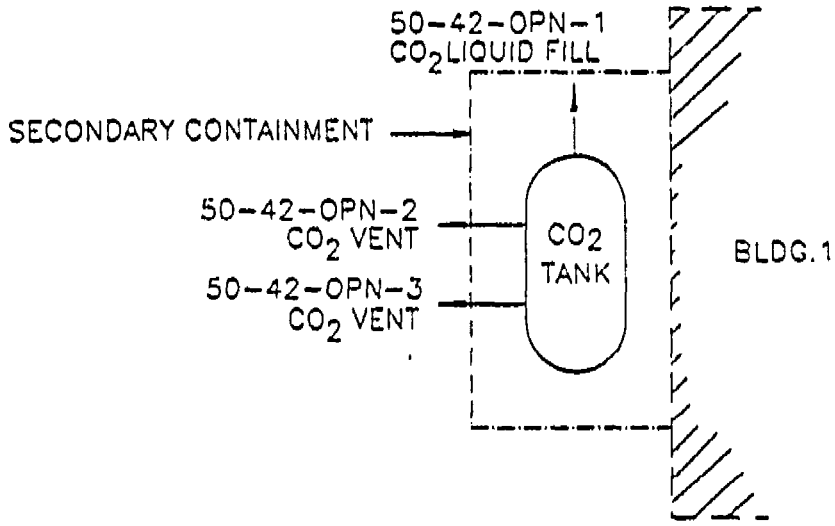

TA-50-5

– NOT TO SCALE –

SANTA FE ENGINEERING, LTD.		
TA-50-42 DRAIN SCHEMATIC	DRAWN	G.S.
	DESIGN	D.R.S.
	CHECKED	P.C.B.
	DATE	6/23/93

SUBMITTED	RECOMMENDED	APPROVED

Los Alamos	Los Alamos National Laboratory Los Alamos, New Mexico 87545	SHEET	OF

CLASSIFICATION	REVIEWER	DATE

REQUESTING DIVISION	LAB JOB NO.	DRAWING NO.	REV.
REQUESTING GROUP EM-8	11056-72	FIGURE 11	

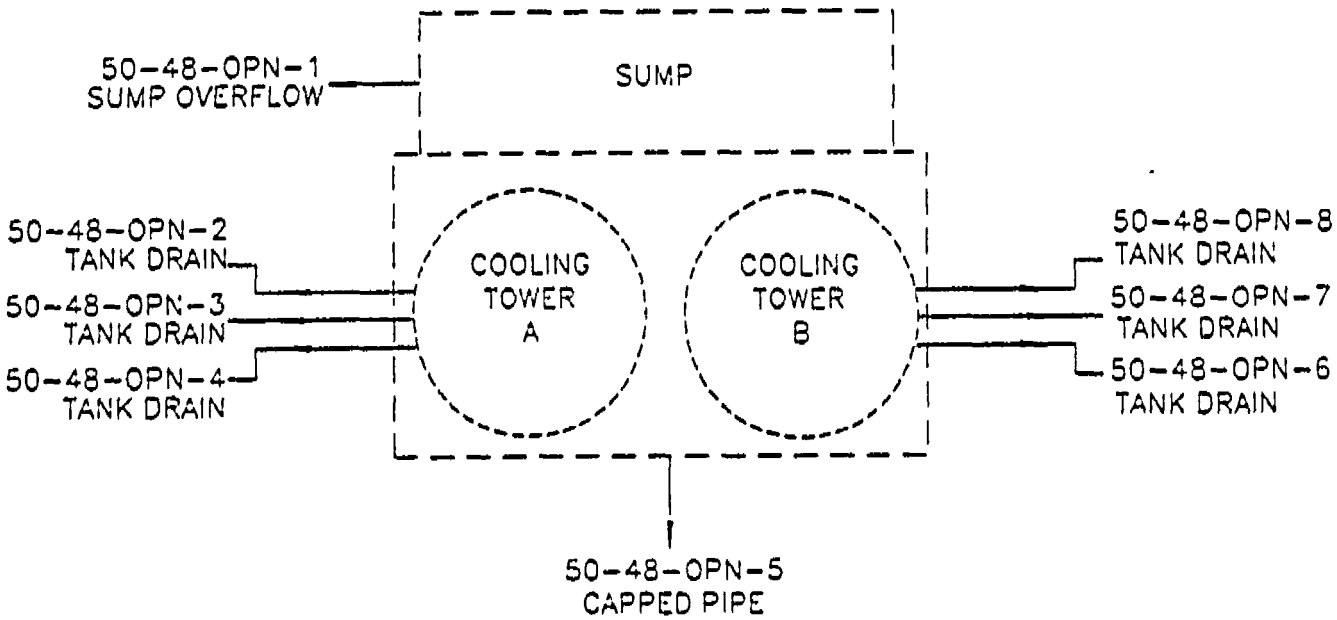

TA-50-48

– NOT TO SCALE –

SANTA FE ENGINEERING, LTD.			
TA-50-48 COOLING TOWERS DRAIN SCHEMATIC		DRAWN	G.S.
		DESIGN	D.R.S.
		CHECKED	P.E.B.
		DATE	6/23/93
SUBMITTED	RECOMMENDED	APPROVED	
Los Alamos	Los Alamos National Laboratory Los Alamos, New Mexico 87545	SHEET	OF
CLASSIFICATION	REVIEWER	DATE	
REQUESTING DIVISION	LAB JOB NO.	DRAWING NO.	REV.
REQUESTING GROUP EM-8	11056-72	FIGURE 12	

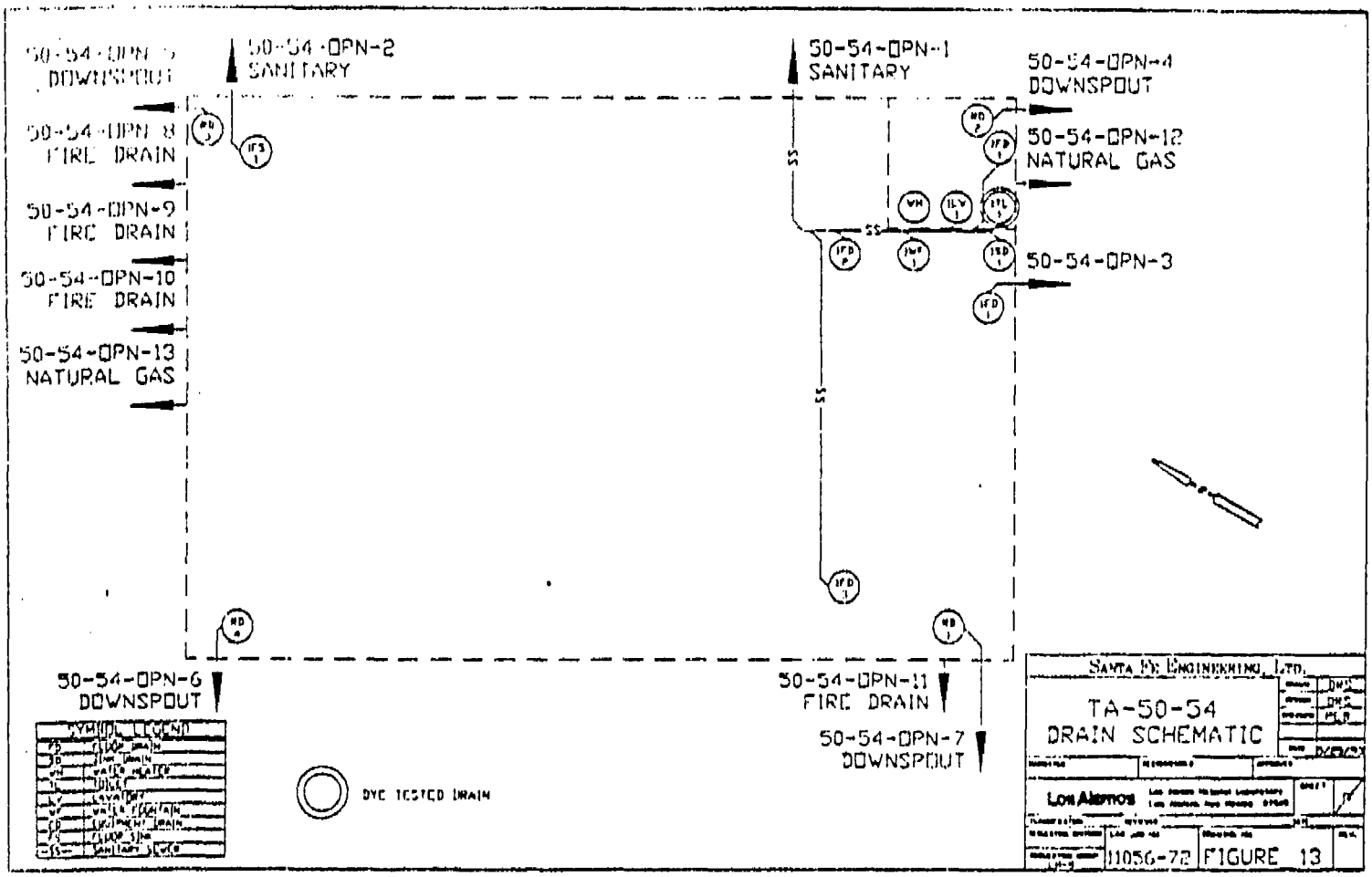
50-54-OPN-5
DOWNSPOUT
50-54-OPN-2
SANITARY
50-54-OPN-1
SANITARY
50-54-OPN-4
DOWNSPOUT
50-54-OPN-8
FIRE DRAIN
50-54-OPN-12
NATURAL GAS
50-54-OPN-9
FIRE DRAIN
50-54-OPN-10
FIRE DRAIN
50-54-OPN-3
50-54-OPN-13
NATURAL GAS
50-54-OPN-6
DOWNSPOUT
50-54-OPN-11
FIRE DRAIN
50-54-OPN-7
DOWNSPOUT
SYMBOL LEGEND
DYE TESTED DRAIN
SANTA FE ENGINEERING, LTD.
TA-50-54
DRAIN SCHEMATIC
Los Alamos
11056-72
FIGURE 13

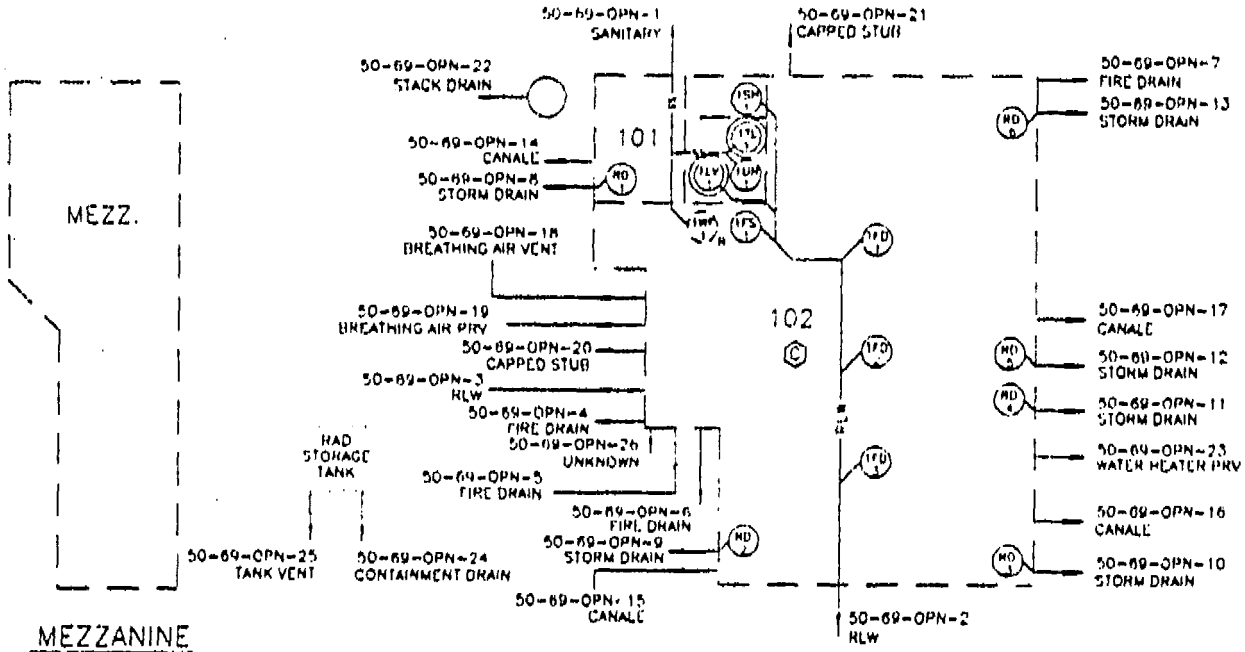

MEZZANINE

FIRST FLOOR

SYMBOL LEGEND	
FD	FLOOR DRAIN
FS	FLOOR SINK
RD	ROOF DRAIN
TL	TOILET
LV	LAVATORY
UR	URINAL
SH	SHOWER
WF	WATER FOUNTAIN
PRV	PRESSURE RELIEF VALVE
SS—	SANITARY SEWER
RLW—	RADIOACTIVE LIQUID WASTE

DYE TESTED DRAIN

REMOVED DRAIN

CONTROLLED AREA

SANTA FE ENGINEERING, LTD.

TA-50-69
DRAIN SCHEMATIC

Los Alamos

11056-72 FIGURE 14

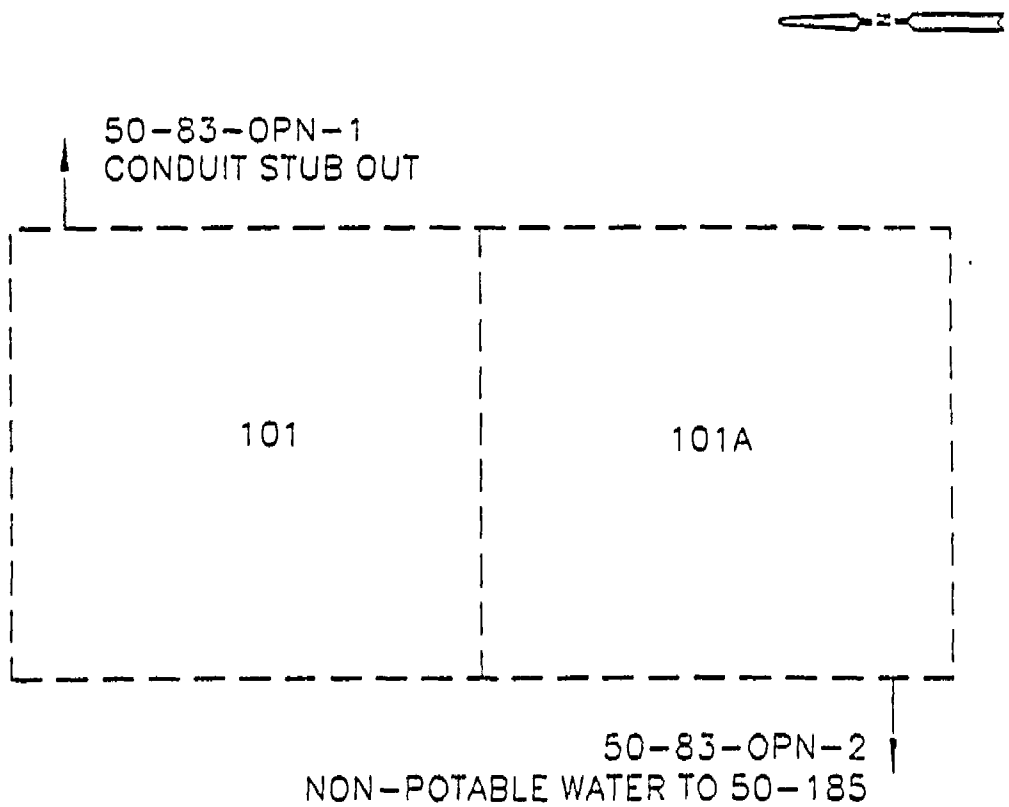

NOT TO SCALE

SANTA FE ENGINEERING, LTD.			
TA-50-83 DRAIN SCHEMATIC		DRAWN	DRS
		DESIGN	DRS
		CHECKED	PEB
		DATE	6/23/93
SUBMITTED	RECOMMENDED	APPROVED	
Los Alamos	Los Alamos National Laboratory, Los Alamos, New Mexico 87545	SHEET	OF
CLASSIFICATION	REVIEWER	DATE	
REQUESTING DIVISION	LAB JOB NO.	DRAWING NO.	REV.
REQUESTING GROUP EM-8	11056-72	FIGURE 15	

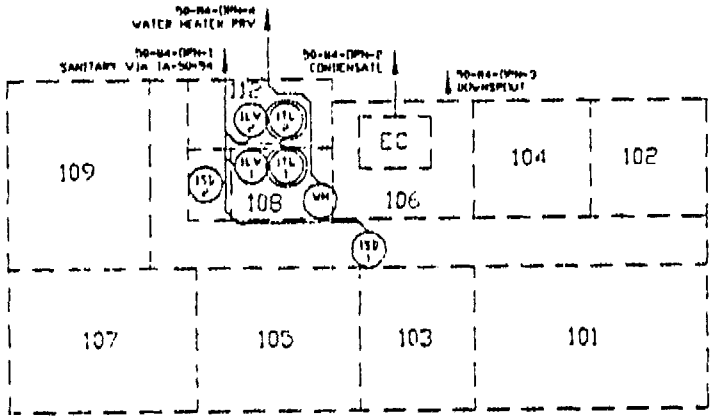

SYMBOL LEGEND

SD	STORM DRAIN
T	TOILET
LV	LAVATORY
WH	WATER HEATER
EV	EVAPORATIVE COOLER
PRV	PRESSURE RELIEF VALVE

DYE TESTED DRAIN

NOT TO SCALE

SANTA FE ENGINEERING, LTD.

TA-50-84
DRAIN SCHEMATICS

Los Alamos

FIGURE 16

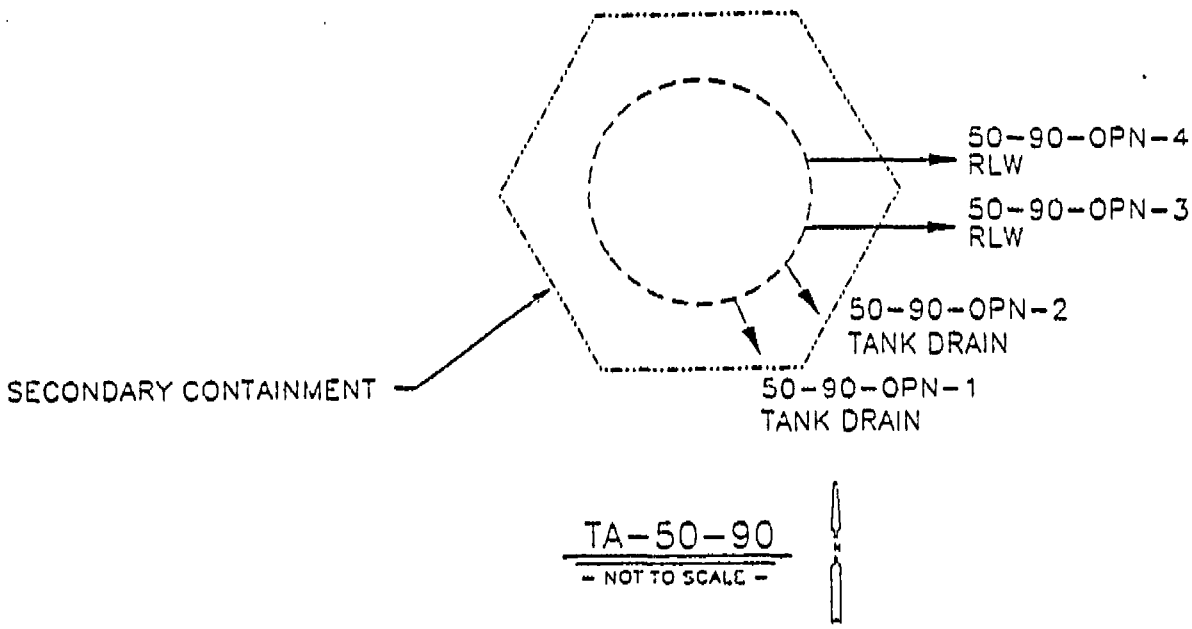

SANTA FE ENGINEERING, LTD.		
TA-50-90 DRAIN SCHEMATIC	DRAWN	G.S.
	DESIGN	D.R.S.
	CHECKED	P.E.D.
	DATE	

SUBMITTED	RECOMMENDED	APPROVED

Los Alamos	Los Alamos National Laboratory Los Alamos, New Mexico 87545	SHEET	OF

CLASSIFICATION	REVIEWER	DATE

REQUESTING DIVISION	LAB JOB NO.	DRAWING NO.	REV.
REQUESTING GROUP EM-8	11056-72	FIGURE 17	

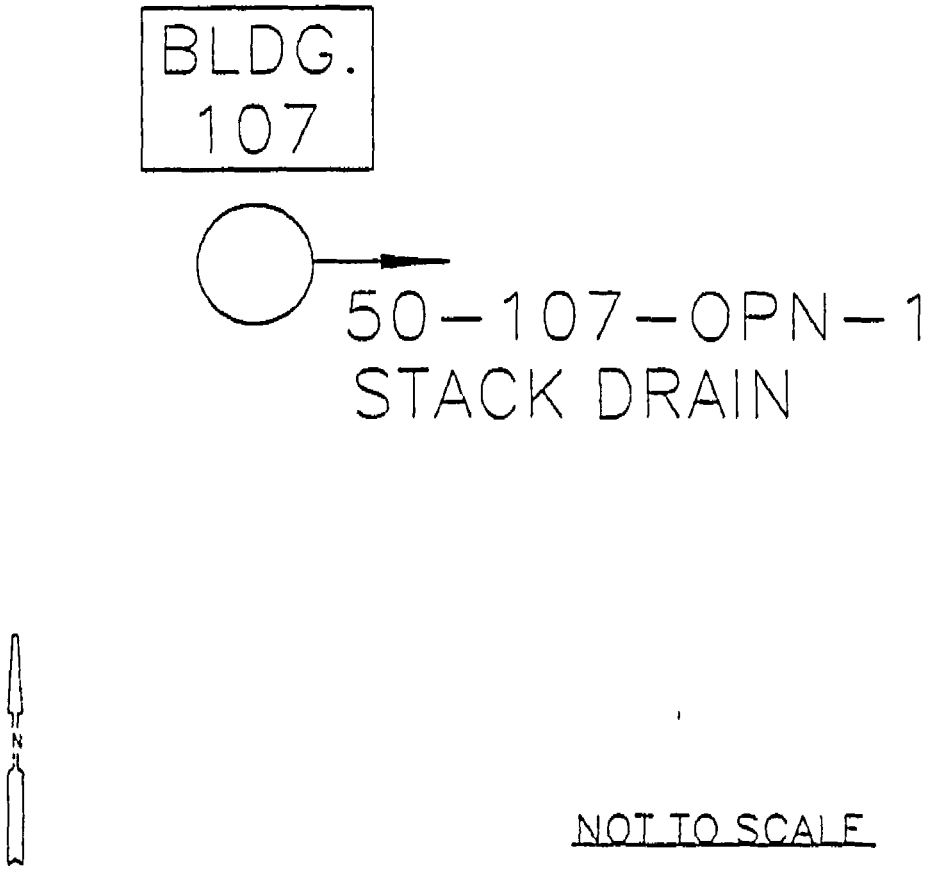

NOT TO SCALE

SANTA FE ENGINEERING, LTD.			
TA-50-107 DRAIN SCHEMATIC		DRAWN	DRS
		DESIGN	DRS
		CHECKED	PEB
		DATE	6/22/93
SUBMITTED	RECOMMENDED	APPROVED	
Los Alamos	Los Alamos National Laboratory Los Alamos, New Mexico 87545	SHEET	OF
CLASSIFICATION	REVIEWER	DATE	
REQUESTING DIVISION	LAB JOB NO.	DRAWING NO.	REV.
REQUESTING GROUP EM-8	11056-72	FIGURE 18	

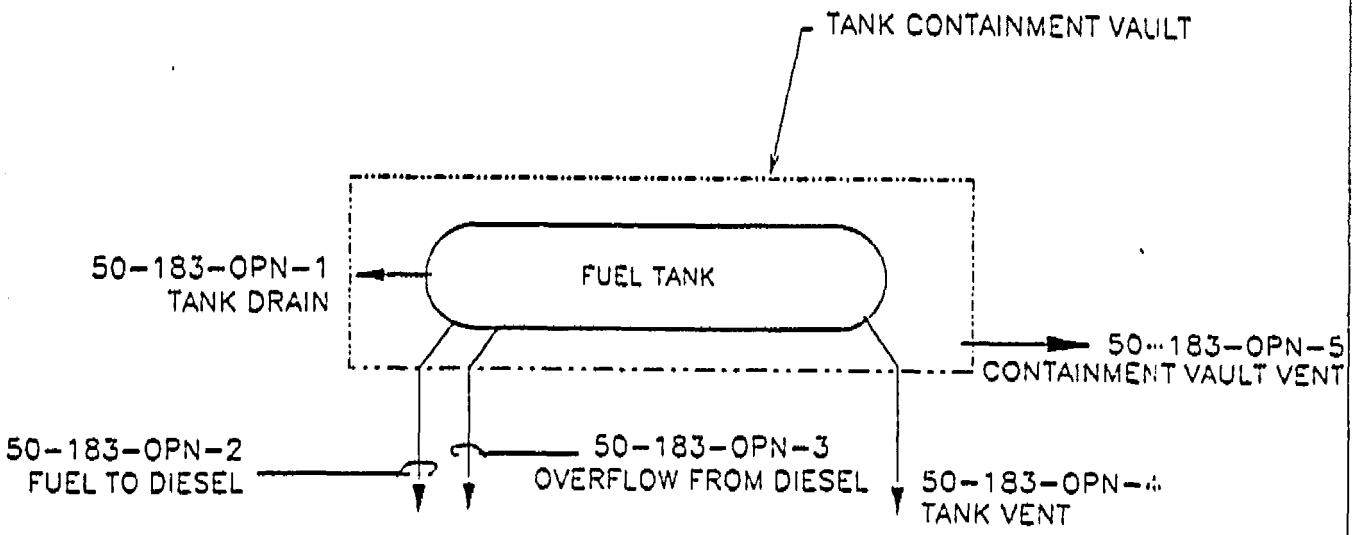

TA-50-183

– NOT TO SCALE –

SANTA FE ENGINEERING, LTD.		
TA-50-183 DRAIN SCHEMATIC	DRAWN	O.S.
	DESIGN	D.R.S.
	CHECKED	F.C.B.
	DATE	6/22/93
SUBMITTED	RECOMMENDED	APPROVED
Los Alamos — Los Alamos National Laboratory, Los Alamos, New Mexico 87545	SHEET	OF
CLASSIFICATION	REVIEWER	DATE
REQUESTING DIVISION	LAD JOB NO.	DRAWING NO. / REV.
REQUESTING GROUP EM-8	11056-72	FIGURE 19

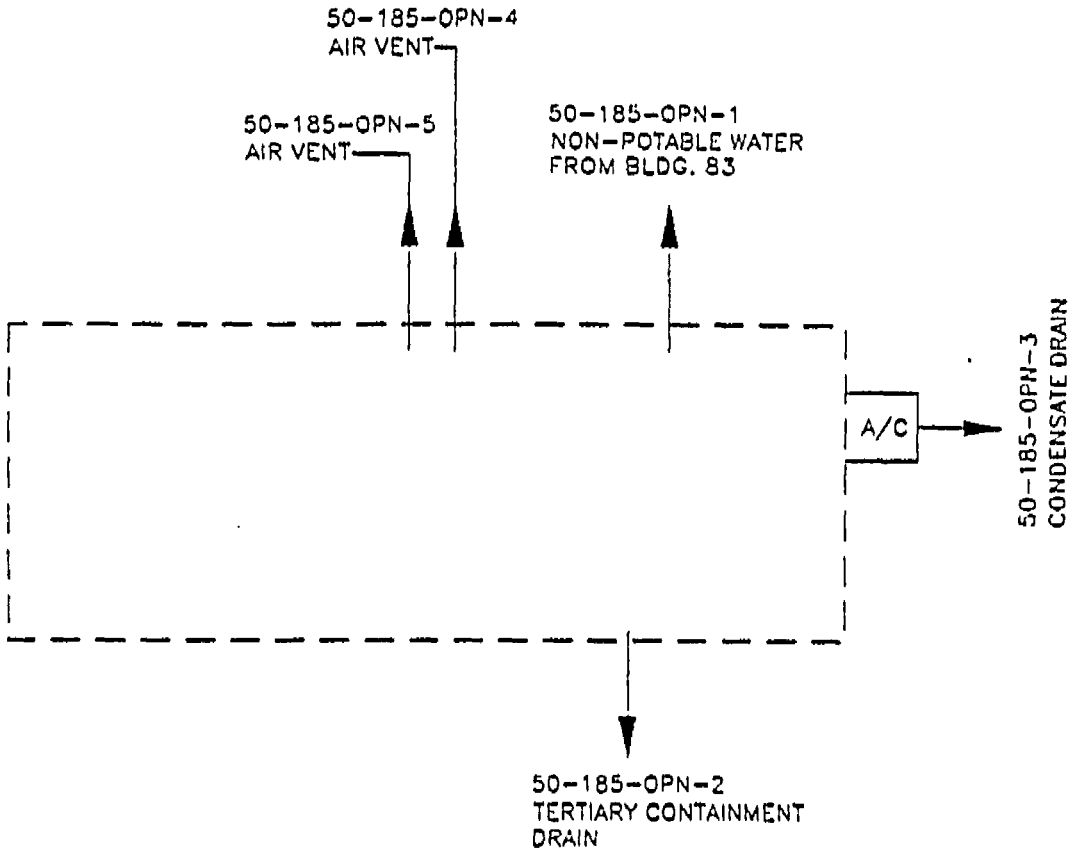

TA-50-185

- NOT TO SCALE -

SANTA FE ENGINEERING, LTD.		
TA-50-185 DRAIN SCHEMATIC	DRAWN	G.S.
	DESIGN	D.R.S.
	CHECKED	F.C.D.
	DATE	8/22/93
SUBMITTED	RECOMMENDED	APPROVED
Los Alamos — Los Alamos National Laboratory, Los Alamos, New Mexico 87545	SHEET	OF
CLASSIFICATION	REVIEWER	DATE
REQUESTING DIVISION	LAB JOB NO.	DRAWING NO. / REV.
REQUESTING GROUP EM-8	11056-72	FIGURE 20

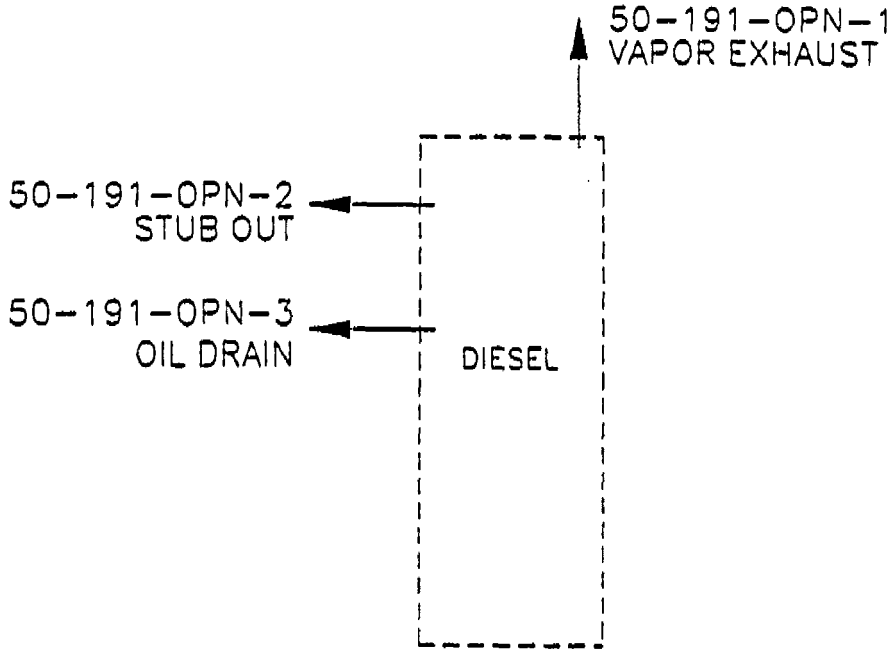

TA-50-191

- NOT TO SCALE -

SANTA FE ENGINEERING, LTD.		
TA-50-191 DRAIN SCHEMATIC	DRAWN	G.S.
	DESIGN	D.R.S.
	CHECKED	P.E.D.
	DATE	5-25-93

SUBMITTED	RECOMMENDED	APPROVED

Los Alamos	Los Alamos National Laboratory Los Alamos, New Mexico 87545	SHEET	OF

CLASSIFICATION	REVIEWER	DATE

REQUESTING DIVISION	LAB JOB NO.	DRAWING NO.	REV.
REQUESTING GROUP EM-8	11056-72	FIGURE 21	