056148

ENTERED

United States
Environmental Protection
Agency

Office of Emergency and
Remedial Response
Washington, DC 20460

EPA/540/2-91/019A
September 1991

EPA

Guide for Conducting Treatability Studies Under CERCLA:

Soil Vapor Extraction

Interim Guidance

Word-searchable version – Not a true copy

32156

EPA/540/2-91/019A
September 1991

GUIDE FOR CONDUCTING TREATABILITY STUDIES UNDER CERCLA: SOIL VAPOR EXTRACTION

I N T E R I M G U I D A N C E

U.S. Environmental Protection Agency
Risk Reduction Engineering Laboratory
Office of Research and Development
Cincinnati, Ohio 45268

and

Office of Emergency and Remedial Response
Office of Solid Waste and Emergency Response
Washington, DC 20460

Word-searchable version – Not a true copy

DISCLAIMER

The information in this document has been Funded wholly or in part by the U.S. Environmental Protection Agency (EPA) under contract No. 68-C8-0061, Work Assignment No. 2-10, to Science Applications International Corporation (SAIC). It has been subjected to the Agency's peer and administrative reviews, and it has been approved for publication as an EPA document. Mention of trade names or commercial products does not constitute endorsement or recommendation for use.

FOREWORD

Today's rapidly developing and changing technologies and industrial products and practices frequently carry with them the increased generation of materials that, if improperly managed, can threaten both public health and the environment. The U.S. Environmental Protection Agency (EPA) is charged by Congress with protecting the Nation's land, air, and water resources. Under a mandate of national environmental laws, the Agency strives to formulate and implement actions leading to a compatible balance between human activities and the ability of natural systems to support and nurture life. These laws direct the EPA to perform research to define our environmental problems, measure the impacts, and search for solutions.

The Risk Reduction Engineering Laboratory (RREL) is responsible for planning, implementing, and managing research, development, and demonstration programs to provide an authoritative, defensible engineering basis in support of the policies, programs, and regulations of the EPA with respect to drinking water, wastewater, pesticides, toxic substances, solid and hazardous wastes, and Superfund-related activities. This publication is one of the products of that research and provides a vital communication link between the researcher and the user community.

The purpose of this guide is to provide standard guidance for designing and implementing a soil vapor extraction (SVE) treatability study in support of remedy selection at Comprehensive Environmental Response, Compensation, and Liability Act (CERCLA) sites. It uses a three tiered approach to treatability testing that consists of 1) remedy screening, 2) remedy selection, and 3) remedy design. It also presents guidance for conducting treatability studies for remedy screening and remedy selection in a systematic fashion to determine the effectiveness of SVE in remediating a CERCLA site. The intended audience for this guide consists of Remedial Project Managers (RPMs), On-Scene Coordinators (OSCs), Potentially Responsible Parties (PRPs), consultants, contractors, and technology vendors.

E. Timothy Oppelt, Director
Risk Reduction Engineering Laboratory

ABSTRACT

Systematically conducted, well-documented treatability studies are an important component of the remedial investigation/feasibility study (RI/FS) and the remedial design/remedial action (RD/RA) processes under the Comprehensive Environmental Response, Compensation, and Liability Act (CERCLA). These studies provide valuable site-specific data necessary to aid in the selection and implementation of a remedy. This manual focuses on soil vapor extraction (SVE) treatability studies conducted in support of remedy selection that are conducted prior to developing the Record of Decision (ROD).

This manual presents guidance for designing and implementing SVE treatability studies for remedy screening and remedy selection. It describes the SVE technology, discusses the applicability and limitations of SVE, and defines the screening and field data needed to support treatability testing. This manual presents an overview of the treatability testing process. It also explains the applicability of tiered treatability testing for evaluating SVE, and defines the specific goals and performance levels that should be met at each tier before additional testing is conducted. Finally, it covers the elements of a treatability study work plan and discusses the design and execution of treatability tests for the remedy screening and remedy selection tiers.

The manual is not intended to serve as a substitute for communication with experts and regulators, nor as the sole basis for the selection of SVE as a remediation technology at a particular site. SVE must be used in conjunction with other treatment technologies since it generates contaminated residuals that must be disposed of properly. In addition, this manual is designed to be used in conjunction with the Guide for Conducting Treatability Studies Under CERCLA (Interim Final).[24] The intended audience for this guide consists of Remedial Project Managers (RPMs), On-Scene Coordinators (OSCs), Potentially Responsible Parties (PRPs), consultants, contractors, and technology vendors.

TABLE OF CONTENTS

Section **Page**

DISCLAIMER ii
FOREWORD iii
ABSTRACT iv
FIGURES vii
TABLES viii
ABBREVIATIONS, ACRONYMS, AND SYMBOLS ix
ACKNOWLEDGMENTS x

1. Introduction 1
   1.1 Background 1
   1.2 Purpose and Scope 1
   1.3 Intended Audience 2
   1.4 Use of This Guide 2

2. Technology Description and Preliminary Screening 5
   2.1 Technology Description 5
   2.2 Preliminary Screening and Technology Limitations 10

3. The Use of Treatability Tests in Remedy Evaluation 17
   3.1 The Process of Treatability Testing in Evaluating a Remedy 17
   3.2 Application of Treatability Tests to SVE 19

4. Treatability Study Work Plan 27
   4.1 Test Goals 27
   4.2 Experimental Design and Procedures 28
   4.3 Equipment and Materials 33
   4.4 Sampling and Analysis 33
   4.5 Data Analysis and Interpretation 34
   4.6 Reports 39
   4.7 Schedule 39
   4.8 Management and Staffing 40
   4.9 Budget 41

5. Sampling and Analysis Plan 43
   5.1 Field Sampling Plan 43
   5.2 Quality Assurance Project Plan 44

6. Treatability Data Interpretation for Technology Selection 47
   6.1 Technical Evaluation 47
   6.2 Cost Estimation from Data 49

7. References 53

8. Glossary 56

TABLE OF CONTENTS
(Continued)

Section		Page
Appendix A	GENERAL PROCEDURE FOR CONDUCTING COLUMN TESTS	59
Appendix B	GENERAL PROCEDURE FOR CONDUCTING AIR PERMEABILITY TESTS	63
Appendix C	GENERAL PROCEDURE FOR CONDUCTING FIELD VENT TESTS	65
Appendix D	COST ESTIMATION DATA FOR IMPLEMENTING SVE TECHNOLOGY	67

FIGURES

Number **Page**

2-1. SVE Technology Processes 6

2-2. Generic Soil Vapor Extraction System 7

3-1. Flow Diagram of the Tiered Approach 18

3-2. The Role of Treatability Studies in the RI/FS and RD/RA Process 19

3-3. General Sequence of Events During RI/FS for SVE 20

4-1. Diagram of Typical Laboratory Column Test Apparatus 30

4-2. Schematic for Typical Air Permeability Test 31

4-3. Extraction Well Construction Details 32

4-4. Hypothetical Column Test Data 35

4-5. Typical Field Air Permeability Test Data 36

4-6. Typical Mathematical Modeling Results 37

4-7. Typical Field Vent Test Data 38

4-8. Example Project Schedule For a Full-Tier SVE Treatability Study Program 40

4-9. Example Organization Chart 41

4-10. General Applicability of Cost Elements to SVE Remedy Selection Tests 42

6-1. Treatability Flowchart for Evaluating SVE 48

TABLES

Number		Page
2-1.	SVE Technology - Contaminant, Soil, and Site Characteristics	12
2-2.	Effectiveness of SVE on General Contaminant Groups for Soil	15
3-1.	Column Test Advantages and Limitations	23
3-2.	Field Air Permeability Test Advantages and Limitations	23
3-3.	Mathematical Modeling Advantages and Limitations	24
4-1.	Suggested Organization of SVE Treatability Study Work Plan	27
4-2.	Testing Applications - Considerations for Composite and Undisturbed Samples	33
5-1.	Suggested Organization of Sampling and Analysis Plan	44
6-1.	Factors Affecting SVE Treatment Costs	50
A-1.	General Procedure for Conducting Column Tests	60
B-1.	General Procedure for Conducting Air Permeability Tests	64
C-1.	General Procedure for Conducting Field Vent Tests	66
D-1.	SVE Cost Estimation	68
D-2.	SVE System Emission Control Costs	69

ABBREVIATIONS, ACRONYMS, AND SYMBOLS

AAR	Applications Analysis Report
ARAR	applicable or relevant and appropriate requirement
ARCS	Alternative Remedial Contracts Strategy
ASTM	American Society for Testing and Materials
ATTIC	Alternative Treatment Technology Information Center
BBS	OSWER Electronic Bulletin Board System
BNA	base, neutral, acid extractable
BTEX	benzene, toluene, ethylbenzene, xylene
EC	degrees Centigrade
CERCLA	Comprehensive Environmental Response, Compensation, and Liability Act of 1980 (Superfund)
cm	centimeters
cm^2	square centimeters
CFR	Code of Federal Regulations
COLIS	Computerized On-Line Information System
d	days
DNAPL	dense nonaqueous phase liquid
EPA	U.S. Environmental Protection Agency
EF	degrees Fahrenheit
FID	flame ionization detector
FR	Federal Register
FSP	Field Sampling Plan
ft	feet
ft^2	square feet
FY	fiscal year
g	grams
gal	gallons
GC	gas chromatography
GC/MS	gas chromatography/mass spectrometry
HSP	Health and Safety Plan
in	inches
in H_2O	inches of water
in Hg	inches of mercury
k	permeability given in darcies or cm^2
kg	kilograms
kg/d	kilograms per day
L/min	liters per minute
lb/d	pound per day
LNAPL	light nonaqueous phase liquid
m	meters
min	minutes
mm Hg	millimeters of mercury
MS	mass spectrometry
NAPL	nonaqueous phase liquid
NIOSH	National Institute for Occupational Safety and Health
NPDES	National Pollution Discharge Elimination System
NPL	National Priorities List
OERR	Office of Emergency and Remedial Response
ORD	Office of Research and Development
OSC	On-Scene Coordinator
OSW	Office of Solid Waste
OSWER	Office of Solid Waste and Emergency Response
PAH	polynuclear aromatic hydrocarbon
PCB	polychlorinated biphenyl
POTW	publicly owned treatment works (sewage treatment)
PRP	Potentially Responsible Party
PVC	polyvinyl chloride
QAPjP	Quality Assurance Project Plan
QA/QC	quality assurance/quality control
RCRA	Resource Conservation and Recovery Act of 1976
RD/RA	remedial design/remedial action
REM	Remedial Engineering Management
RFP	request for proposal
RI/FS	remedial investigation/feasibility study
ROD	Record of Decision
RP	responsible party
RPM	Remedial Project Manager
RREL	Risk Reduction Engineering Laboratory
RSKERL	Robert S. Kerr Environmental Research Laboratory
S/C	subcontractor
s	seconds
s^2	seconds squared
SAP	Sampling and Analysis Plan
scfm	standard cubic feet per minute
SCH	schedule
SITE	Superfund Innovative Technology Evaluation
SOP	standard operating procedure
SPDES	State Pollution Discharge Elimination System
SVE	soil vapor extraction
SVOC	semivolatile organic compound
TCE	trichloroethylene
TCLP	toxicity characteristic leaching procedure
TPH	total petroleum hydrocarbons
TSDF	treatment, storage, or disposal facility
TSP	Technical Support Project
UST	underground storage tank
VOC	volatile organic compound
VP	vapor pressure
WP	work plan

ACKNOWLEDGMENTS

This guide was prepared for the U.S. Environmental Protection Agency, Office of Research and Development, Risk Reduction Engineering Laboratory (RREL), Cincinnati, Ohio, by Science Applications International Corporation (SAIC) and Foster Wheeler Enviresponse, Inc. (FWEI) under Contract No. 68-C8-0061. Mr. David Smith served as the EPA Technical Project Monitor. Mr. Jim Rawe and Mr. Seymour Rosenthal were SAIC's Work Assignment Manager and FWEI's Subcontract Manager, respectively. FWEI's Dr. James P. Stumbar and Mr. Jim Rawe (SAIC) authored the document. Mr. Peter Michaels provided technical advice for FWEI. Ms. Marilyn Avery served as Technical Editor for FWEI. Mr. Clyde Dial and Mr. Thomas Wagner provided technical review for SAIC. Dr. David Wilson of Vanderbilt University and Dr. Neil Hutzler of Michigan Technological University served as scientific advisers.

Ms. Robin M. Anderson of the Office of Emergency and Remedial Response (OERR) has been the inspiration and motivation for the development of this document. Mr. Chi-Yuan Fan of RREL, Edison, New Jersey, has provided much technical input on Soil Vapor Extraction (SVE) technology and treatability studies. Ms. Dianne Walker of Region III has provided comments which reflect her experience with SVE and present the perspective of the Regional Remedial Project Managers.

The following other Agency, contractor, vendor, and user personnel have contributed their time and comments by participating in the guide's workshop and by peer reviewing the draft document:

Edward R. Bates	EPA, RREL
John Brugger	EPA, RREL
Miko Fayon	EPA, Region II
Bruce Bauman	American Petroleum Institute
Richard A. Brown	Groundwater Technology, Inc.
Ann N. Clarke	Eckenfelder, Inc.
Russel Creange	Envirosafe Services, Inc.
David DePaoli	Oak Ridge National Laboratory
Brad G. Downing	MWR, Inc.
Michael Finton	Foster Wheeler Enviresponse, Inc.
George E. Hoag	University of Connecticut
Paul C. Johnson	Shell Development Corporation
George Losonski	MWR, Inc.
Paul Lurk	U.S. Army Toxic and Hazardous Materials Agency
James Malot	TerraVac
Edward G. Marchand	U.S. Air Force
Michael Marley	Vapex Environmental Technology

George Mickelson	State of Wisconsin Department of Natural Resources
Donald Neeper	Los Alamos National Laboratory
Emil Onuschak, Jr.	State of Delaware Department of Natural Resources & Environmental Control
Frederick C. Payne	MWR, Inc.
Tom Pedersen	Camp Dresser & McKee Inc.
Michael Peterson	TerraVac
Scott Richter	Vapex Environmental Technology
Frank Rogers	TerraVac
John Schuring	New Jersey Institute of Technology
David E. Speed	IBM Corporation
Joe Tillman	SAIC
James H. Wilson	Martin Marietta

The document was also reviewed by EPA's Office of Waste Programs Enforcement and the Technology Innovation Office. We sincerely hope we have not overlooked anyone who participated in the review and development of this guide.

SECTION 1
INTRODUCTION

1.1 BACKGROUND

Section 121(b) of the Comprehensive Environmental Response, Compensation, and Liability Act of 1980 (CERCLA) mandates the U.S. Environmental Protection Agency (EPA) to select remedies that "utilize permanent solutions and alternative treatment technologies or resource recovery technologies to the maximum extent practicable" and to prefer remedial actions in which treatment that "permanently and significantly reduces the volume, toxicity, or mobility of hazardous substances, pollutants, and contaminants is a principal element." Treatability studies provide data to support remedy selection and implementation. They should be performed as soon as it becomes evident that the available information is insufficient to ensure the quality of the decision. Conducting treatability studies early in the remedial investigation/feasibility study (RI/FS) process should reduce uncertainties associated with selecting the remedy and should provide a sound basis for the Record of Decision (ROD).

Treatability studies conducted during the RI/FS phase indicate whether a given technology can meet the expected cleanup goals for the site. Treatability studies conducted during the remedial design/remedial action (RD/RA) phase establish the design and operating parameters for optimization of technology performance. Although the purpose and scope of these studies differ, they complement one another (i.e., information obtained in support of remedy selection may also be used to support the remedy design).[36]

This document refers to three levels or tiers of treatability studies: remedy screening, remedy selection, and remedy design. Three tiers of treatability studies are also defined in the Guide for Conducting Treatability Studies Under CERCLA, Interim Final,[24] referred to as the "generic guide" hereafter in this document. The generic guide refers to the three treatability study tiers, based largely on the scale of test equipment, as laboratory screening, bench-scale testing and pilot-scale testing. Laboratory screening is typically used to screen potential remedial technologies and is equivalent to remedy screening. Bench-scale testing is typically used for remedy selection. Bench-scale studies can, in some cases, provide enough information for full-scale design. Pilot-scale studies are normally used for remedial design, but in many cases may be required for remedy selection. Because of the overlap between these tiers, and because of differences in the applicability of each tier to different technologies, the functional description of treatability study tiers (i.e., remedy screening, remedy selection. and remedy design) has been chosen for this document.

Some or all of the levels of treatability study testing may be needed on a case-by-case basis. The need for and the level of treatability testing required are management decisions in which the time and cost necessary to perform the testing are balanced against the risks inherent in the decision (e.g., selection of an inappropriate treatment alternative). These decisions are based on the quantity and quality of data available and on other decision factors (e.g., State and community acceptance of the remedy or experience with the technology at other sites). The use of treatability studies in remedy evaluation is discussed further in Section 3 of this document. Section 6 provides guidance on when various tiers of treatability tests should be conducted; indicates the types of treatability tests that are recommended; and gives recommendations for interpreting the results.

1.2 PURPOSE AND SCOPE

This guide is designed to ensure that a credible approach is taken to evaluate whether soil vapor extraction (SVE) should be considered for site remediation. This guide discusses all three levels of treatability studies but focuses on the remedy screening and remedy selection tiers.

SVE technologies have been used to remove vapor from landfills since the 1970's.[27] During the 1980's SVE was applied extensively to remediating contaminated soil from leaking underground storage tanks (USTs). Hence the application of SVE to leaking UST problems is well

understood. The application of SVE to remediate Superfund sites has, until recently, been relatively limited. As of fiscal year 1991 (FY 91), SVE has been selected as the remedial technology, or a component thereof, for over 30 Superfund sites. Prior to 1988, SVE had been chosen as a component of the ROD at only two sites. However, SVE was chosen as a component of the ROD at 10 sites in 1988 and 17 sites in 1989.[28][22] SVE has been used for the remediation of at least four Superfund sites: Tyson's Dump in Pennsylvania, Verona Well Field in Michigan, Fairchild Semiconductor in California, and Upjohn in Puerto Rico. Completion of fullscale systems at the Groveland (Massachusetts) and Long Prarie (Minnesota) sites is expected soon.[22]

There are significant differences between UST and Superfund contamination problems. The dissimilarities between UST and Superfund sites stem from the relative complexity of the sites. The previous contents of USTs are usually well-documented or can be fairly easily identified. Therefore UST sites often have one type of well-characterized contaminant. Conversely, contaminants detected at Superfund sites commonly come from more than one source. The contaminants are often found at different locations on the site and in different geologic structures, making these sites more complex. The recommendations for treatability testing contained in this document try to achieve a balance between limiting the costs of treatability testing and reducing the risks of selecting inappropriate cleanup remedies. This document recognizes that deviations from these recommendations may be justified as more experience is gained in treatability testing of SVE for Superfund sites, or based upon site-specific factors. Because of the evolving nature of this technology, consultation with SVE experts is especially critical.

Proper evaluation of the applicability of any technology to site remediation requires a phased process of data collection, testing, and evaluation. For SVE this process starts with prescreening using available site characterization data. Treatability testing may consist of soil column tests for remedy screening; additional column tests and field air permeability tests for remedy selection; and pilot-scale tests for remedy selection and/or remedy design. Mathematical modeling is frequently used to obtain estimates of the required cleanup times and to guide the designs of the pilot-scale and full-scale systems.

1.3 INTENDED AUDIENCE

This document is intended for use by Remedial Project Managers (RPMs), On-Scene Coordinators (OSCs), Potentially Responsible Parties (PRPs), consultants, contractors, and technology vendors. Each has a different role in conducting treatability studies under CERCLA. Specific responsibilities for each can be found in the generic guide[24]

1.4 USE OF THIS GUIDE

This guide is organized into eight sections that discuss the basic information required to perform treatability studies during the RI/FS process. The guide is formatted to permit the reader to refer to a particular section at a specific time period during the execution of treatability studies under CERCLA. Section 1 is an introduction which provides background information on the role of treatability studies in the RI/FS process, discusses the purpose and scope of the guide; and outlines the intended audience for the guide. Section 2 describes the SVE process and discusses how to conduct preliminary screening to determine if SVE treatment is a potentially viable remediation technology. Section 3 provides an overview of the different levels of treatability testing and discusses how to determine the need for treatability studies. Section 4 provides an overview of the treatability study program; describes the contents of a typical Work Plan; and discusses the major considerations for conducting treatability studies. Section 5 discusses the Sampling and Analysis Plan, including the Field Sampling and the Quality Assurance Project Plans. Section 6 explains how to interpret the data produced from the treatability tests and how to determine if further testing is justified. Sections 7 and 8 are the references and glossary, respectively.

This guide, along with guides being developed for other technologies is intended to be used as a companion documents to the generic guide.[24] In an effort to avoid redundancy, supporting information in other readily available guidance documents is not repeated in this document.

This document was reviewed by representatives from EPA's Office of Emergency and Remedial Response (OERR). Office of Research and Development (ORD), and the Regional offices, as well as by a number of contractors and academic personnel. The constructive comments received from this peer review process have been integrated and/or addressed throughout this guide.

Treatability studies for SVE are in their infancy. Procedures for conducting column, air permeability, and pilot-scale tests, and for performing mathematical modeling have not been standardized or validated. There are disagreements among experts concerning the relative utility of the above tools for

evaluating the applicability of the technology. The lack of consensus stems from the uncertainties associated with the use of in situ technologies (See subsection 2.2.4).

As we gain treatability study experience, EPA anticipates further comment and possible future revisions to this document. For this reason, EPA encourages further constructive comments. Comments should be directed to:

Mr. David Smith
U.S. Environmental Protection Agency
Office of Research and Development
Risk Reduction Engineering Laboratory
26 W. Martin Luther King Drive
Cincinnati, OH 45268
(513) 569-7957

SECTION 2
TECHNOLOGY DESCRIPTION AND PRELIMINARY SCREENING

This section presents an overall description of the full-scale SVE technology and a discussion of the necessary information for prescreening the technology prior to commitment to a treatability test program. Subsection 2.1 gives a short explanation of the physical principles and theory on which the technology is based and describes a typical SVE system. Subsection 2.2 discusses the field data and literature and data base searches used to prescreen SVE as a potential candidate for cleanup at a specific site. This subsection also discusses the technical assistance available at the prescreening stage and the technology limitations.

2.1 TECHNOLOGY DESCRIPTION

The SVE process is a technique for the removal of volatile organic compounds (VOCs), and some semivolatile organic compounds (SVOCs), from the vadose zone. The vadose zone is the subsurface soil zone located between the land surface and the top of the water table. SVE is used with other technologies in a treatment train since it transfers contaminants from soil and interstitial water (see Figure 2-1) to air and the entrained and condensed water wastestreams. These streams require further treatment.

Information on the technology applicability, the latest performance data, the status of the technology, and sources for further information are provided in one of a series of engineering bulletins being published by the EPA Risk Reduction Engineering Laboratory in Cincinnati, Ohio.[22]

2.1.1 SVE Technology Theory

In order to better understand the process, the applicability and limitations of SVE technology, and other topics discussed in this document, an overview of SVE technology theory is presented in this subsection. Figure 2-1 illustrates the processes that occur in soil contaminated by VOCs and the mechanisms of contaminant removal.

Contaminants exist in the soil in one or more of the following forms: nonaqueous phase liquids (NAPLs), solutions of organics in water, material adsorbed to the soil, and mixtures of free vapor.[7][29] Under static conditions, these phases are in equilibrium. The distribution between phases is determined by various physical phenomena controlling the equilibrium.

NAPLs can occur in the soil as pools of contaminants or as residual liquids trapped between soil particles. In the vicinity of the NAPLs, the equilibrium between vapor and liquid phases is governed by Raoult's Law.[10][32] NAPLs consist of light nonaqueous phase liquids (LNAPLs) and dense nonaqueous phase liquids (DNAPLs). LNAPLs, which include hydrocarbons, ketones, etc., are less dense than water. DNAPLs, which include chlorinated hydrocarbons, are more dense than water.

In many instances the contaminants are dissolved in the pore water that fills the interstices between soil particles. Equilibrium between the contaminant in the aqueous solution and that in the associated vapor is then governed by Henry's Law.[7][29][31][32][34]

If the contaminant is strongly adsorbed to solid material, the equilibrium between vapor and adsorbed contaminant is likely to be controlled by adsorption isotherm parameters.[7][29][32] Adsorption control may be operative for low contaminant concentrations, clayey soils, soils containing large amounts of humus, and soils containing large amounts of solid organic matter that can adsorb the contaminant phase of interest. Soil moisture conditions also affect contaminant adsorption since water molecules compete for the soil adsorption sites. The amount of time that contaminants have been in the soil may affect the amount of material that is adsorbed, especially when the adsorption processes are slow.

Several factors affect the movement of contaminants in soil and groundwater. Soluble compounds tend to travel

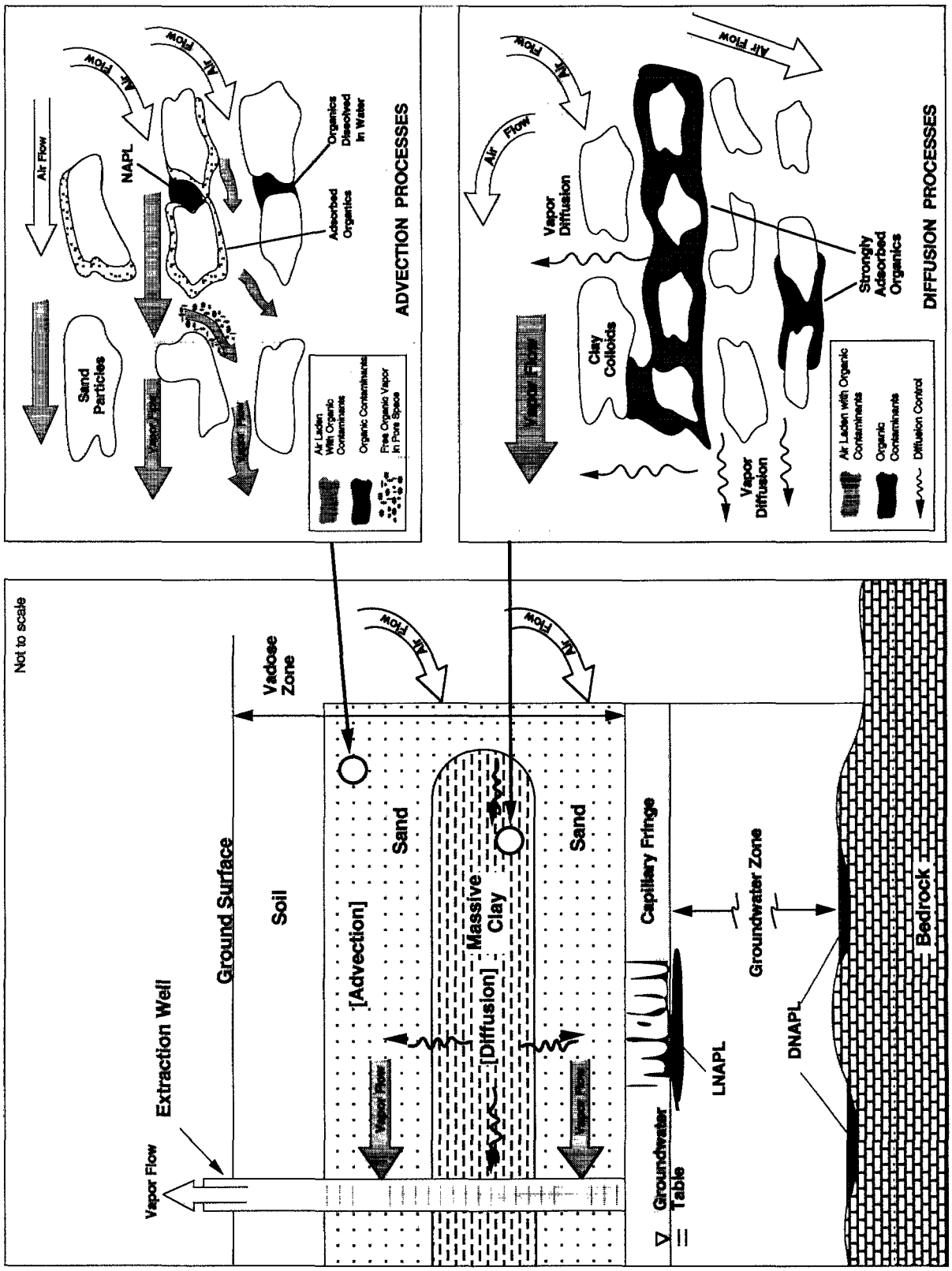

Figure 2-1. SVE technology processes.

farther in soils where the water infiltration rate is high. Chemicals with affinity for soil organic material or mineral adsorption sites will move slowly. Contaminant density and, to a lesser extent, viscosity have an impact on organic liquid movement and the location of the contaminants. LNAPLs will sink through the soil until they reach the capillary fringe where they tend to form pools. DNAPLs will continue to sink below the water table until they encounter an impermeable layer.

The dynamic process of SVE is characterized as follows. When air is drawn through the soil, it passes through a series of pores, most readily following the paths of low resistance (through zones of high air permeability). Air that is drawn through pores that contain contaminated vapor and liquids will carry the vapor away (advect the vapors). Contaminants will vaporize from one or more of the condensed phases (organic, aqueous, adsorbed), replacing the vapors that were carried away in the air stream. The vaporization tends to maintain the vapor-condensed phase equilibrium that was established prior to removal of the contaminants. This process will continue until all of the condensed-phase organics are removed from the regions of higher permeability soil.

Contaminants in lower permeability zones will not be removed by advection since the air stream will flow through higher permeability zones. If the contamination is located in a stagnant region some distance from the air flow, the vapor must diffuse to the air stream before it can be carried away. This diffusion process would then limit the rate of contaminant removal by the SVE process. If the rate of diffusion is very slow, it can limit the ability of SVE to remove contaminants in an acceptable time frame.

2.1.2 Process Description

Vapor extraction wells and air vents or injection wells are installed in the contaminated zone. As air is removed from the soil, ambient air is injected, or is drawn into the subsurface at locations around the contaminated site. When ambient air passes through the soil, contaminants are volatilized and removed as discussed in the previous section.

A schematic of a generic SVE system is shown in Figure 2-2. It consists of the following: (1) one or more vapor extraction wells, (2) one or more air inlet or injection wells

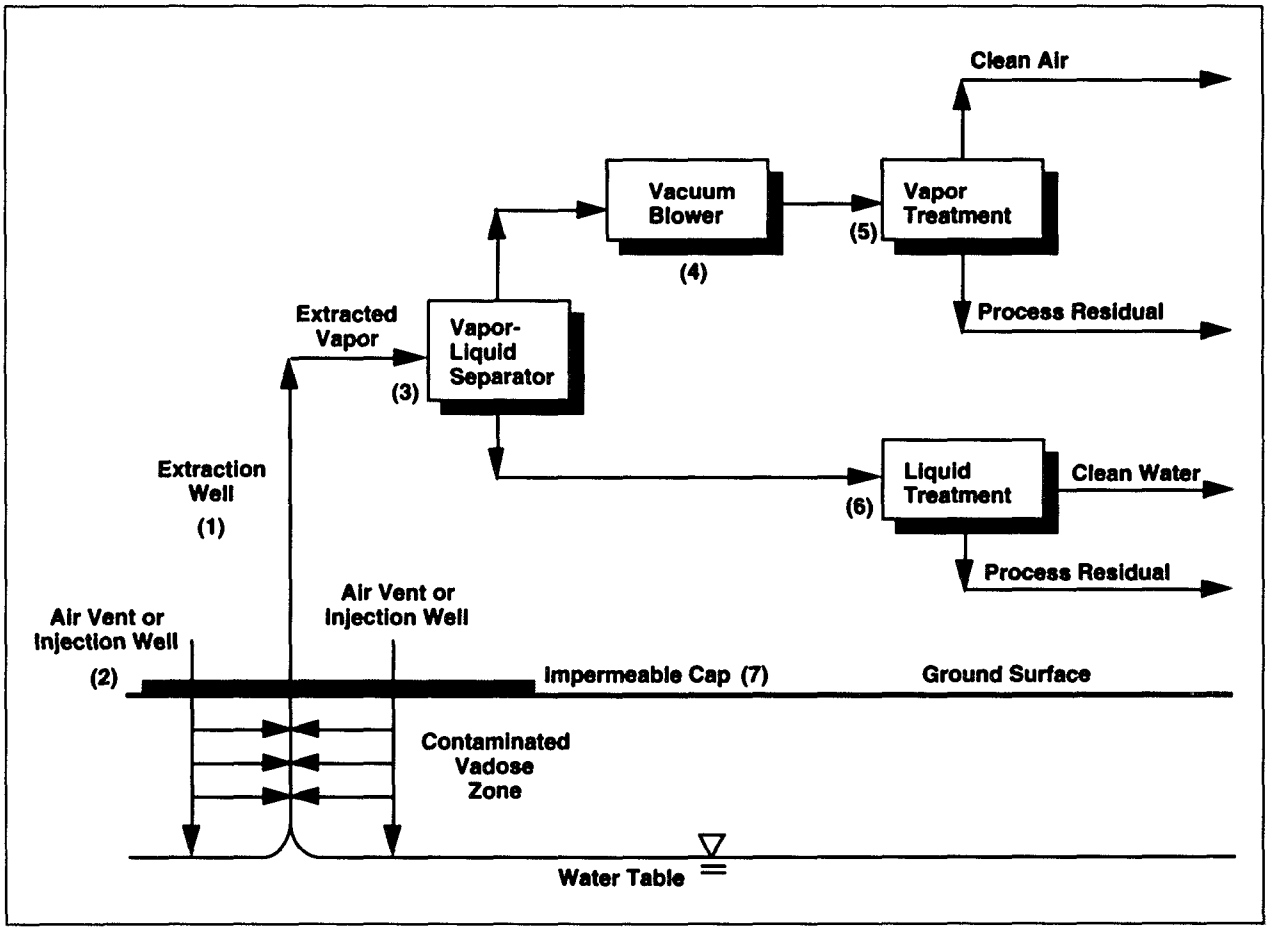

Figure 2-2. Generic soil vapor extraction system.

(optional), (3) vapor/liquid separator (optional), (4) vacuum pumps or air blowers, (5) vapor treatment (per regulations), (6) liquid treatment (per regulations), and (7) an impermeable cap (optional).[11][22][31]

Vapor extraction wells are typically designed to penetrate the lower portion of the vadose zone to the capillary fringe. If the groundwater is at a shallow depth, or if the contamination is confined to near-surface soils, the vapor extraction wells may be placed horizontally.[7][29][31]

Vapor extraction wells usually consist of slotted pipe placed in permeable packing. For long-term applications, the well casing material should be selected to be compatible with the contaminants of concern. The permeable packing consists of coarse sand or gravel. The top few feet of the augered column for vertical wells, or the trench for horizontal wells, is grouted to prevent the direct inflow of air from the surface (short circuiting) along the well casing or through the trench.

In some cases, it may also be desirable to install air inlets or injection wells to enhance and control air flow through zones of maximum contamination. These wells are constructed similarly to the vapor extraction wells. Inlet wells or vents are passive and allow air to be drawn into the ground. Air injection wells force air into the ground.[18] In general, more air is withdrawn than injected. However, if too much air is injected, contaminant laden air can be forced out of the soils through the ground surface.

Piping material connecting the wells to headers is selected based on contaminant compatibility. The headers are connected to the blowers or pumps. Pipes and headers may be wrapped with heat tape and insulated in northern climates to reduce condensation and to prevent freezing of any condensate.

The vacuum pumps or blowers reduce gas pressure in the extraction wells and induce subsurface air flow to the wells. Ball or butterfly valves are used to adjust flow from or into individual wells. The pressure fromthe outlet side of the pumps or blowers can be used to push the exit gas through a treatment system and back into the ground (if air injection wells are used). The induced vacuum causes a negative pressure gradient in the surrounding soils. The projected area of soil affected by this pressure gradient is called the zone of influence. The radius of influence is the radial distance from the vapor extraction well that has adequate air flow for effective removal of contaminants when a vacuum is applied to the vapor extraction well. Hence, the radius of influence and the extent of contamination determine the number of extraction wells required on the site. Site characteristics such as stratigraphy, the presence of an impermeable surface or subsurface barrier, and soil properties such as porosity and permeability affect the radius of influence. The use of air vents or air injection wells and increases in the strength of the applied vacuum can be used to maximize the radius of influence.[12][29] Reported radius of influence values for permeable soils (sandy soils) range from 30 to 120 feet. Good surface seals are required, especially for shallow wells (screened less than 20 feet below surface), to prevent short circuiting of air flow to the surface. For less permeable soils (silts, clays) or for shallow wells, the radius of influence is usually less.[12] The radius of influence in fractured bedrock or in other non-homogeneous stratigraphies will not be symmetrical (i.e., the radius of influence may extend 200 feet along a fracture but be only 2 or 3 feet wide).

An “impermeable” cap over the treatment site (optional) serves several purposes. First, it minimizes infiltration of water from the surface. Infiltration water can fill soil pore spaces and reduce air flows. A cap may also increase the system’s radius of influence by preventing short circuiting. Finally, it may also help to control the horizontal movement of inlet air, which can bypass contaminants. Plastic membranes, existing buildings and parking lots, and natural soil layers of low permeability may serve this purpose.[31]

The following instruments monitor process conditions. Gas flow meters measure the volume of extracted air. Pressures in the overall system are measured with vacuum gauges. Temperatures are measured by thermometers or other devices. Sampling ports may be installed in the system at each well head, at the blower, and after vapor treatment. In addition, monitoring probes may be placed to measure soil vapor concentrations, temperatures, and the radius of influence of the vacuum from the vapor extraction wells.

A vapor/liquid separator is installed on some systems to protect the blowers and to increase the efficiency of vapor treatment systems. The entrained groundwater and condensate brought up through the system may then have to be treated as a hazardous waste, depending on the types and concentrations of contaminants.

Vapors extracted by the SVE process are typically treated using carbon adsorption, thermal destruction by incineration or catalytic oxidation, or condensation.[5][12][31] Other methods, such as biological treatment, ultraviolet oxidation, and dispersion also have been applied in SVE systems. The type of treatment chosen depends on the composition and concentration of contaminants. Methods that destroy or recover contaminant vapors for reuse are preferable.

Carbon adsorption is the most commonly employed vapor treatment process and is adaptable to a wide range of VOC concentrations and flowrates.[29] Skid-mounted, offsite-regenerated,carbon-canister systems are generally employed for low gas volumes and onsite-regenerated bed systems are employed for high gas volumes and cleanups of extended duration.

Thermal destruction of contaminant vapors by incineration or catalytic oxidation is quite effective for a wide range of compounds. Catalytic oxidation is effective on hydrocarbon vapors. Recently developed catalysts permit the efficient destruction of halogenated compounds (bromides, chlorides, or fluorides) also.[19]

Condensation can be used to separate the effluent VOCs from the carrier air. This is usually accomplished by refrigeration[30]. The efficiency of this technique is determined by the effect of temperature on the vapor pressure (VP) of the VOCs present. Condensation is most efficient for high concentrations of vapors. The technology becomes less efficient as the cleanup progresses and vapor concentrations drop. It may be ineffective during the last stages of the cleanup. Since vapors are not completely condensed, a carbon adsorption or other additional treatment step may be required to remove residual vapors from the effluent stream.

Dispersion of the effluent vapors has been used during the application of the technology to cleanups of contaminants from leaking USTs, but it is not recommended by the EPA. Dispersion is not a treatment technology; it releases contaminants into the air. Dispersion of some contaminants is prohibited in non-attainment areas and in many states.

Many states require an air permit. Since SVE is an in situ process, the land ban restrictions apply only to treatment residues such as spent activated carbon and recovered organic liquids. Individual states may, however, have rules or regulations affecting cleanup levels for a particular VOC contaminant in the soil. Cleanup levels must be established on a site-specific basis.

When properly designed and operated, SVE is a safe process. Potentially explosive mixtures of the extracted gas may be encountered on some sites, such as landfills or gasoline spill sites. Among the 25 most common substances identified at Superfund sites,[14] benzene, ethylbenzene, toluene, 1,1-dichloroethane, 1,2-dichloroethane, chlorobenzene, 1,2-dichloroethylene, and methylene chloride are all capable of forming explosive mixtures at ambient conditions. For these situations, explosion-proof equipment should be utilized. This includes explosion-proof blowers and motors, flame arresters, instrumentation to minimize the probability of an explosion, equipment interlocks to prevent potentially dangerous conditions, and special procedures. EXPLOSION-PROOF EQUIPMENT SHOULD BE USED unless it can be demonstrated that there is no potential explosive hazard. The probability of encountering explosive mixtures can be very high at complex CERCLA sites.

Contaminated residuals are produced from the application of this technology. These may include recovered condensate (contaminated water and possibly supernatant organics), spent activated carbon from offgas treatment, nonrecovered contaminant in the soil, soil tailings from drilling, and air emissions after treatment. Contaminated water requires treatment in accordance with the State/National Pollution Discharge Elimination System (SPDES/ NPDES) permit levels prior to surface water discharge, or in accordance with pretreatment requirements prior to discharge to a publicly owned treatment works (POTW). When contaminated water is recovered by the SVE process, it can usually be treated with carbon adsorption or air stripping followed by discharge to surface waters, POTW, or by onsite reinjection. If this is not feasible, the contaminated water can be pumped into a holding tank. This holding tank can be emptied by a tank truck that periodically hauls the contaminated water to an appropriate treatment and disposal facility. Soil tailings from the drilling operation may be contaminated. They can be placed in covered piles and treated onsite by adding vent connections to the SVE system. The soil tailings can also be collected in drums or dumpsters and sent for offsite treatment.[28] Any spent activated carbon should be disposed of in accordance with regulations and policy.

Equipment used in the SVE process can be either mobile or field-constructed. Mobilization of portable equipment can usually be accomplished within one week, with startup and full-scale operations in about two weeks. The construction of the vapor extraction and monitoring wells requires the mobilization of a portable drill rig. When activated carbon canisters are used for offgas treatment, they are skid-mounted so that they can be moved with a forklift truck. Operation and maintenance requirements are low. Systems have demonstrated their ability for safe, continuous operation with a minimum of attention.

Note that several United States patents may be applicable to the employment of the technology. This should be discussed with appropriate SVE vendors.

2.2 PRELIMINARY SCREENING AND TECHNOLOGY LIMITATIONS

The determination of the need for and the appropriate tier of treatability study required is dependent on the literature available on the technology, expert technical judgment, and site-specific factors. The first two elements– the literature search and expert consultation– are critical factors of the prescreening phase in determining whether adequate data are available, or whether a treatability study is needed.

2.2.1 Literature/Data Base Review/ Information Sources

Several reports and electronic data bases exist that should be consulted for prescreening technologies and for planning and conducting SVE treatability studies. Existing reports include:

- Soil Vapor Extraction: Reference Handbook. U.S. Environmental Protection Agency, Office of Research and Development and Office of Emergency and Remedial Response, Washington, D.C. EPA/540/2-91/003, 1991.

- Guide for Conducting Treatability Studies Under CERCLA, Interim Final. U.S. Environmental Protection Agency, Office of Research and Development and Office of Emergency and Remedial Response, Washington, D.C. EPA/540/ 2-89/058, December 1989.

- Guidance for Conducting Remedial Investigations and Feasibility Studies Under CERCLA, Interim Final. U.S. Environmental Protection Agency, Office of Emergency and Remedial Response, Washington, D.C. EPA/540/G-89/004, October 1988.

- Superfund Treatability Clearinghouse Abstracts. U.S. Environmental Protection Agency, Office of Emergency and Remedial Response, Washington, D.C. EPA/540/2-89/001, August 1989.

- The Superfund Innovative Technology Evaluation Program: Technology Profiles. U.S. Environmental Protection Agency, Office of Solid Waste and Emergency Response and Office of Research and Development, Washington, D.C. EPA/540-5 90/006, November 1990.

- Summary of Treatment Technology Effectiveness for Contaminated Soil. U.S. Environmental Protection Agency, Office of Emergency and Remedial Response, Washington, D.C. 1989 (in press).

- Technology Screening Guide for Treatment of CERCLA Soils and Sludges. U.S. EPA/540/2-88/ 004, September 1988.

Currently, the Risk Reduction Engineering Laboratory (RREL) in Cincinnati is expanding the RREL Treatability Data Base. This expanded data base will contain data from soil treatability studies. A repository for the treatability study reports will be maintained at the RREL in Cincinnati. The contact for this data base is Glenn Shaul at (513) 569-7408.

The Office of Solid Waste and Emergency Response (OSWER) maintains an Electronic Bulletin Board System (BBS) for communicating ideas, disseminating information, and serving as a gateway for other OSW electronic data bases. Currently, the BBS has eight different components, including news and mail services, and conferences and publications on specific technical areas. The contact is James Cummings at (202) 382-4686.

RREL in Edison, New Jersey, maintains a Computerized On-Line Information System (COLIS), which consolidates several RREL computerized data bases in Cincinnati and Edison. COLIS contains three files, consisting of Case Histories, Library Search, and Superfund Innovative Technology Evaluation (SITE) Applications Analyses Reports (AARs). The Case Histories file contains historical information obtained from corrective actions implemented at Superfund sites. The Library Search system provides access to special collections and research information on many RREL programs, including SVE. The SITE AARs file supplies actual cost and performance information. The contact is Pacita Tibay at (201) 906-6871.

ORD headquarters maintains the Alternative Treatment Technology Information Center (ATTIC), which is a compendium of information from many available data bases. Data relevant to the use of treatment technologies in Superfund actions are collected and stored in ATTIC. ATTIC searches other information systems and data bases and integrates the information into a response. It also includes a pointer system that refers the user to individual experts in EPA. The system currently encompasses technical summaries from SITE program abstracts, treatment technology demonstration projects, industrial project results, and international program data. Contact the ATTIC System Operator at (301) 816-9153.

2.2.2 Technical Assistance

The Technical Support Project (TSP) is made up of six Technical Support Centers and two Technical Support Forums. It is a joint service of OSWER, ORD, and the Regions. The TSP offers direct site-specific technical assistance to EPA's On-Scene Coordinators (OSCs) and RPMs, and develops technology workshops, issue papers, and other information for Regional staff. The TSP:

- Reviews contractor work plans, evaluates remedial alternatives, reviews RI/FS, assists in selection and design of final remedy
- Offers modeling assistance and data analysis and interpretation
- Assists in developing and evaluating sampling plans
- Conducts field studies (soil gas, hydrogeology, site characterization)
- Develops technical workshops and training, issue papers on groundwater topics, generic protocols
- Assists in performance of treatability studies.

The following support centers provide technical information and advice related to SVE and treatability studies:

1. **Groundwater Fate and Transport Technical Support Center**
   Robert S. Kerr Environmental Research Laboratory (RSKERL), Ada, OK
   Contact: Don Draper
   FTS 743-2202 or (405) 332-8800

   RSKERL, Ada, Oklahoma, is EPA's center for fate and transport research, focusing its efforts on transport and fate of contaminants in the vadose and saturated zones of the subsurface, methodologies relevant to protection and restoration of groundwater quality, and evaluation of subsurface processes for the treatment of hazardous waste. The Center provides technical assistance such as evaluating remedial alternatives; reviewing RI/FS and RD/RA Work Plans; and providing technical information and advice.

2. **Engineering Technical Support Center**
   Risk Reduction Engineering Laboratory (RREL), Cincinnati, OH
   Contact: Ben Blaney
   FTS 648-7406 or (513) 569-7406

   The Engineering Technical Support Center (ETSC) is sponsored by OSWER but operated by RREL. The Center handles site-specific remediation engineering problems. Access to this support Center must be obtained through the EPA Remedial Project Manager.

   RREL offers expertise in contaminant source control structures; materials handling and decontamination; treatment of soils, sludges and sediments; and treatment of aqueous and organic liquids. The following are examples of the technical assistance that can be obtained through the ETSC:

   - Screening of treatment alternatives
   - Review of the treatability aspects of RI/FS
   - Review of RI/FS treatability study Work Plans and final reports
   - Oversight of RI/FS treatability studies
   - Evaluation of alternative remedies
   - Assistance with studies of innovative technologies
   - Assistance in full-scale design and startup.

2.2.3 Prescreening Characteristics

Several variables determine the potential of SVE as a candidate for site remediation and provide information required for the prescreening phase of the site remedial investigation. These variables are summarized in Table 2-1 and discussed below. These contaminant, soil, and site characteristics were compiled from literature, data base sources, and site characterizations. They represent the data collected during site scoping and prescreening of the SVE technology.

In conjunction with the site conditions and soil properties, contaminant properties will dictate whether SVE is feasible. SVE is most effective at removing compounds which have high vapor pressure and which exhibit significant volatility at ambient temperatures in contaminated soil. Low molecular weight, volatile compounds are most easily removed by SVE. Compounds exhibiting vapor pressures over 0.5 millimeters of mercury (mm Hg) can most readily be extracted using SVE.[4] Trichloroethene, trichloroethane, tetrachloroethene, and many gasoline constituents have been effectively removed by SVE. Compounds which are less suitable for removal include trichlorobenzene, acetone, and other extremely water soluble volatiles, and heavier petroleum fuels.

Table 2-1 presents a number of contaminant/ site characteristics that should be considered when evaluating the applicability of SVE. This table also identifies when those characteristics should be considered in the evaluation pro-

TABLE 2-1. SVE Technology – Contaminant, Soil, and Site Characteristics

Characteristics Impacting Process Feasibility	Reason for Potential Impact	Data Collection Requirements	Application of Data	Standard Analytical Method	Reference
CONTAMINANT					
Type	SVE suitability SVE system design	Contaminant identification	All Phases	Methods 8010, 8015, 9071. 8040,8120,8240, 3810, 8020, 8270, 9071, 9310, 9315, 9060, 1311	35 42
Low volatility (vapor pressure)	Indicative of low potential for contaminant volatilization	Contaminant Identification	Remedy Screening	Literature	
High density, High water solubility	Tendency to migrate to less SVE efficient saturated zone	Contaminant Identification	Remedy Screening	Literature	
SOIL					
Low air permeability	Hinders movement of air through soil matrix	Field air permeability test	Remedy selection (See Section 3)	None	12
High humic content	Inhibition of volatilization, high sorption of VOCs, need for column test verification	Analysis for organic matter	Remedy Screening	None (Humic Acid Titrimetric)	1
High moisture content	Hinders movement of air through soil and is a sink for dissolved VOCs. May require consideration of water table depression	Analysis of soil moisture content	All Phases	ASTM D 2216, (drying oven) ASTM D 3017 (in situ)	2 2
Low temperature	Lowers contaminants' vapor pressures	Soil temperature	All Phases	None (Thermometer)	
High clay content	Loss of structural support through the drying of clay. Hinders movement of air through soil. Need for field air permeability tests.	Shrinkage limit tests Field air permeability moisture content, grain size tests	Remedy Screening Remedy Selection	ASTM D422, 1140, 2419 ASTM D 4546 None (See above)	12 2 12
pH	Materials selection		Remedy Selection and Remedy Design	Method 9045	35
Low porosity	Hinders movement of air through soil. Need for field air permeability test	Porosity (calculated specific gravity bulk density	All Phases	ASTM 854 ASTM D 2937	2
SITE					
Distribution and quantity of contaminants	May not be cost effective. Will require overall definition of contamination and potential NAPL pools. Need pilot scale verification.	Soil mapping, soil gas survey, site characterization	Remedy Selection	1556,29,2167 Method 3810, 8240	35
Variable soil conditions/characteristics	Inconsistent removal rates "short circuiting" or bypassing or contaminated zones	Soil mapping and characterization (type, particle, size, porosity)	Remedy Selection	ASTM D 2487, 2488	2
Lithology, heterogeneity	Affects well design and placement and SVE system design. Need field air permeability tests and/or pilot-scale verification	Field air, permeability (distribution) test	Remedy Selection		
Buried debris	Inconsistent removal rates. Need field air permeability and/or pilot-scale verification	Site history, geophysical testing	Remedy Screening		

cess (i.e., during screening, selection, or design). It is not necessary that knowledge of all these characteristics be obtained before deciding to proceed with treatability tests for SVE.

Methods for detecting and analyzing soil gas are important during the site characterization for assessing the potential of SVE for site remediation. Analysis of contaminants in the soil gas can provide critical data regarding contaminants and their distribution at the site. Identification of the contaminants may help to pinpoint the source of contamination — a leaking UST, past spills, or an offsite source. Identifying the source may enable quicker characterization of any remaining contamination. Soil gas samples should be taken to indicate areas of potential contamination. Soil borings can then be made in those areas to delineate the amount, the location, and the extent of the contamination.

It is important to identify geologic structures which may be situated between the surface and the lower limit of the contamination. These structures (i.e., large clay lenses, large rocks and boulders, and large cavities) can significantly impede vapor extraction. The most reliable way to identify these structures is to evaluate the lithologic descriptions of soil boring logs (either existing or those conducted as part of the evaluation). Blow counts recorded from drilling operations can indicate densely compacted layers that may impede vapor extraction. Geophysical surveys, such as electrical resistivity, can also be conducted at the surface to delineate in general terms the existance of subsurface geologic structures.

After the contaminants and geologic structures have been identified, their occurrences should be mapped in relation to each other. By doing this, it can be determined where the SVE system should be placed (i.e., where the contaminants are of highest concentration) and if any geologic structures will interfere. To evaluate this relationship, both plan view and cross-sectional maps should be generated; or, if available, a 3D computer-generated map would serve this purpose.

Typically, soils and groundwater are analyzed for VOCs, base, neutral, and acid extractables (BNAs), and total petroleum hydrocarbons (TPH). For complex mixtures such as gasoline, diesel fuel, and solvent mixtures, it is more economical to measure indicator compounds such as benzene, toluene, ethylbenzene, and xylenes (BTEX) or trichloroethylene (TCE) rather than each compound present. Biodegradation products should be considered as possible target compounds because they are often more toxic than the parent compound (e.g., TCE may be converted to vinyl chloride). Since SVE may not remove all contaminants, soils should be analyzed for less volatile or nonvolatile contaminants (BNAs and TPH) to assess the need to remediate by other methods (excavation, biotreatment, soil washing, etc.). Contaminants in the groundwater indicate a potential for high mobility and increased health risks. The contaminants may be dissolved in the groundwater or may be moving downward as free organics through the saturated soil. Since insoluble contaminants tend to concentrate at impermeable or semipermeable interfaces, LNAPL may be present as free product at the capillary fringe and DNAPL may occur as free product at the bottom of the aquifer. Determination of the extent of groundwater contamination aids in assessing the need for remediation by pump and treat technology.

The soil characteristics of the site have a significant effect on the applicability of SVE. The air permeability of the contaminated soils controls the rate at which air can be drawn through the soil by the applied vacuum. The soil moisture content or degree of saturation is also important. It is usually easier to extract VOCs from drier soils due to the greater availability of pore area, which permits higher air flowrates. Operation of an SVE system can dry the soil by entrainment of water droplets [32][34] and, to a lesser extent, by evaporation. However, extremely dry soils may tenaciously hold VOCs, which are more easily desorbed when water competes with them for adsorption sites.[6][38] This phenomenon, which may occur more frequently in the southwestern states, favors a certain quantity of moisture to be present in the soil to prevent sorption of contaminants.

Soils with high clay or humic content generally provide high adsorption potential for VOCs, thus inhibiting the volatilization of contaminants. However, the high adsorption potential of clayey soils does not necessarily make SVE inapplicable to these soils. Clayey or silty soils may be effectively treated by SVE.[32][34] The success of SVE in these soils may depend on the presence of more permeable zones (as would be expected in alluvial settings) that permit air flow close to the less permeable material (i.e., clay).

Soil and ambient temperatures affect the performance of an SVE system primarily because they influence contaminant vapor pressure. At lower temperatures, the potential for contaminant volatilization decreases.

Most site conditions cannot be changed. The extent to which VOCs are vertically and horizontally dispersed in the soil is an important consideration in deciding whether SVE is preferable to other methods. Soil excavation and treatment are probably more cost effective when only a few hundred cubic yards (yd^3) of near-surface soils are contaminated. If the spill has penetrated more than 20 or 30 feet (ft), has spread through an area of several hundred square feet (ft^2) at a particular depth, or has contaminated a soil volume of 500 yd^3, excavation costs begin to exceed those associated with an SVE system.[18][37]

The depth to groundwater is also important because SVE is applicable only to the vadose zone (area above the water table). If contaminated soil is below the top of the water table, the level of the water table may be lowered, in some cases, to increase the volume of the unsaturated zone that can be treated.

Water infiltration decreases the air-filled porosity and increases the amount of water entrained by the SVE system. This reduces the rate of contaminant removal and increases residual treatment costs. The water infiltration rate can be controlled by placing an "impermeable" cap over the site. Such a cap can also increase the system's radius of influence. If used, a cap must be specifically designed for the site. For instance, if a thick layer of gravel exists below an asphalt or concrete cap, there can be significant short circuiting through the gravel.

Heterogeneities, such as debris, fill material, and geological anomalies, influence air movement as well as the location of contaminants. The uncertainty in the location of heterogeneities makes it more difficult to position vapor extraction and inlet wells. There generally will be significant differences in die air permeability of the various soil strata.

SVE may be favorable for a horizontally stratified soil because the relatively impervious layers will limit the rate of vertical inflow of air from the surface and tend to extend the applied vacuum's influence from the point of extraction.

Buried debris can affect the application of many remediation technologies. SVE may also be a cost-effective alternative at such sites or when contamination extends across property lines, beneath buildings, or under extensive utility trench networks.

Prescreening of SVE examines the field data for the types and concentrations of contaminant present, and for soil temperature to determine contaminant vapor pressure. If the vapor pressure of the contaminants of concern is below 0.5 mm Hg, SVE is considered to be generally unsuitable. Soil characteristics, site geology and hydrogeology, and the elevation of the water table relative to contamination zones are also considered during prescreening. If the site conditions are favorable and if the vapor pressure at the temperature of the soil is above 0.5 mm Hg, treatability testing should be conducted (see Section 6.1). Example 1 illustrates the use of existing site data in making a decision on the need for treatability studies.

Example 1. Prescreening Initial Data

Background

A former 4-acre industrial site in the southeastern United States was used for manufacturing and chemical storage over the last 25 years. During that time, waste and chemical spills from various chemical handling, storage, and transfer activities had contaminated the site.

Use of the Data to Prescreen SVE

The site manager performed the prescreening by conducting a literature survey, reviewing existing data, and obtaining expert opinion. Preliminary site characterization data indicate the contaminants of concern are trichloroethane, benzene, 1,2-dichlorobenzene, and styrene. Soil concentrations of all these contaminants are above 1000 ppm. Previous soil borings had shown that most of the contamination was located 20-30 feet below grade. The zone of contamination covers 3 acres. Groundwater occurs at 50 feet below grade, 20 feet above the bedrock surface; it is not contaminated. The soils at the site are sandy clay and fairly homogeneous. The literature survey showed the following:

- All contaminant vapor pressures exceed 0.5 mm Hg.
- SVE has been demonstrated in sandy clay soils.
- Styrene and 1,2-dichlorobenzene have the lowest vapor pressures

The experts recommended SVE for further consideration as a site remedy. They recommended treatability tests starting with column tests for remedy screening to demonstrate the effectiveness of SVE on styrene and 1,2-dichlorobenzene. If these tests demonstrated the potential applicability of SVE, they would be followed by more detailed column tests for remedy selection and then field air permeability tests.

Decision

Based upon the above factors, the RPM retained SVE for the Remedy Screening Phase.

2.2.4 Technology Applicability

The applicability of SVE for general contaminant groups in soil is shown in Table 2-2.[22] SVE has been successfully implemented under buildings, industrial tank farms, gas stations, and beneath large diameter (150 ft) above-ground storage tanks.[5][34] SVE has also been applied in fractured bedrock. However, data for evaluating its performance and effectiveness in this medium are lacking. If the contaminant has reached the bedrock, the installation of SVE wells into the bedrock (even if air flowrates are low) may reduce or eliminate the spread of contamination to underlying groundwater.

SVE often provides effective source control of contaminants in soils. It is often a safer and more cost-effective alternative than excavation and disposal. Soil excavation can release significant amounts of volatile contaminants into the atmosphere, even where engineering controls are in place. Release of such volatiles could violate air emissions regulations, cause unnecessary health risks to workers and to people in nearby residences, and cause nuisance odors. One significant advantage of the SVE process is that sites are treated in situ, without excavation.[34]

Table 2-2.
Effectiveness of SVE on General Contaminant Groups for Soil

	Contaminant Groups	*Effectiveness*
Organics	Halogenated volatiles	■
	Halogenated semivolatiles*	▼
	Nonhalogenated volatiles	■
	Nonhalogenated semivolatiles*	■
	PCBs	❑
	Pesticides	❑
	Dioxins/Furans	❑
	Organic cyanides	❑
	Organic corrosives	❑
Inorganic	Volatile metals	❑
	Nonvolatile metals	❑
	Asbestos	❑
	Radioactive materials	❑
	Inorganic corrosives	❑
	Inorganic cyanides	❑
Reactive	Oxidizers	❑
	Reducers	▼

■ Demonstrated Effectiveness: Successful treatability test at some scale completed
▼ Potential Effectiveness: Expert opinion that technology will work
❑ No Expected Effectiveness: Expert opinion that technology will not work
* Demonstrated effectiveness on some compounds in the containment group.

When volatile and nonvolatile contaminants such as pesticides, polychlorinated biphenyls (PCBs), polynuclear aromatic hydrocarbons (PAHs), or metals are present simultaneously at a site, the applicability of SVE must be carefully assessed. In some cases, SVE will not be applicable (e.g., concentrations of volatiles are low but concentrations of metals are high). In other cases, SVE could be applied to the volatiles prior to excavation of the soil and use of another technology, such as incineration, to remediate the other contaminants. For example, SVE could be applied to remove tetrachloroethylene. The soil could be excavated and incineration could be applied to remove PCBs. The incinerated soil could then be stabilized to reduce the mobility of lead. Finally, SVE could be applied as a sole remedy to prevent migration of mobile materials, such as chloroform, to the groundwater, and the other contaminants could be left in place after capping of the site because of low mobility. The presence of both volatile and nonvolatile contaminants often occurs at CERCLA sites, and one or more of the above strategies may have to be applied to different parts of a complex site.

SVE may be enhanced by the use of heated air and increased natural biological activity,[5][9][17] but these topics are beyond the scope of this guide.

2.2.5 Technology Limitations

Limitations of the SVE technology are those characteristics of the contaminants, soil, and site that hinder the extraction of the contaminants from the unsaturated soil. Table 2-1 summarizes the characteristics that impact SVE feasibility, gives reasons for the potential impact, and presents the data collection requirements that identify these technology constraints.

A number of uncertainties appear to limit the application of SVE and other in situ technologies. Areas of uncertainty include: lack of precise information on site heterogeneities and contaminant location; inability to accurately predict cleanup times, doubt in some cases whether cleanup goals can be achieved at sites with very low cleanup targets or at those in fractured bedrock. These uncertainties must be recognized when conducting treatability studies, when performing the detailed analysis of alternatives, and when applying the technology for site remediation.

Some of the data collection requirements outlined in Table 2-1 should be satisfied before the prescreening phase. These consist of the compilation of data from literature and data base sources, and from site-specific assessments, investigations, and characterizations. Subsection 2.2.3 discussed these existing data and their applicability in determining the viability of SVE as a potential remediation technology. It also discussed the need for further evaluation through a tiered treatability study program. Where data collection requirements are satisfied during the treatability tests, it is so noted under the column labeled "Application of Data" in the table.

SECTION 3
THE USE OF TREATABILITY STUDIES IN REMEDY EVALUATION

This section presents an overview of the use of treatability tests in confirming the selection of SVE as the remedial technology under CERCLA. It also provides a decision tree (Figure 3-1) that defines the tiered approach to the overall treatability study program. Examples illustrate the application of treatability studies to the RI/FS and remedy evaluation process. Subsection 3.1 briefly reviews the process of conducting treatability tests. Subsection 3.2 explains the tiered approach to conducting treatability studies. It shows how to apply each tier of testing, based on the information previously obtained, to assess and evaluate SVE technology during the remedy screening and remedy selection phases of the site remediation process.

3.1 THE PROCESS OF TREATABILITY TESTING IN EVALUATING A REMEDY

Treatability studies should be performed in a systematic fashion to ensure that the data generated can support the remedy evaluation process. The results of these studies must be combined with other data to fully evaluate the technology. This section describes a general approach that should be followed by RPMs, PRPs, and contractors throughout the investigation. This approach includes:

- Establishing data quality objectives
- Selecting a contracting mechanism
- Issuing a Work Assignment
- Preparing the Work Plan
- Preparing the Sampling and Analysis Plan
- Preparing the Health and Safety Plan
- Conducting community relations activities
- Complying with regulatory requirements
- Executing the study
- Analyzing and interpreting the data
- Reporting the results.

These elements are described in detail in the generic guide.[24] General information applicable to all treatability studies is presented first, followed by information specific to the testing of SVE.

Treatability studies for a particular site often entail multiple tiers of testing. Duplication of effort can be avoided by recognizing this possibility in the early planning of the project. The Work Assignment, Work Plan, and other supporting documents should specify all anticipated activities to reduce duplication of efforts and provide for the full data needs as the project moves from one tier to another.

There are three levels or tiers of treatability studies: remedy screening, remedy selection, and remedy design. Some or all of the levels may be needed on a case-by-case basis. The need for and the level of treatability testing are management-based decisions in which the time and cost of testing are balanced against the risks inherent in the decision (e.g., selection of an inappropriate treatment alternative). These decisions are based on the quantity and quality of data available and on other decision factors (e.g., State and community acceptance of the remedy, or new site data). The flow diagram in Figure 3-1 shows the decision points and factors to be considered in following the tiered approach to treatability studies.

Technologies generally are evaluated first at the remedy screening level, and progress through the remedy selection to the remedy design level. A technology may enter, however, at whatever level is appropriate, based on available data on the technology and site-specific factors. For example, a technology that has been studied extensively may

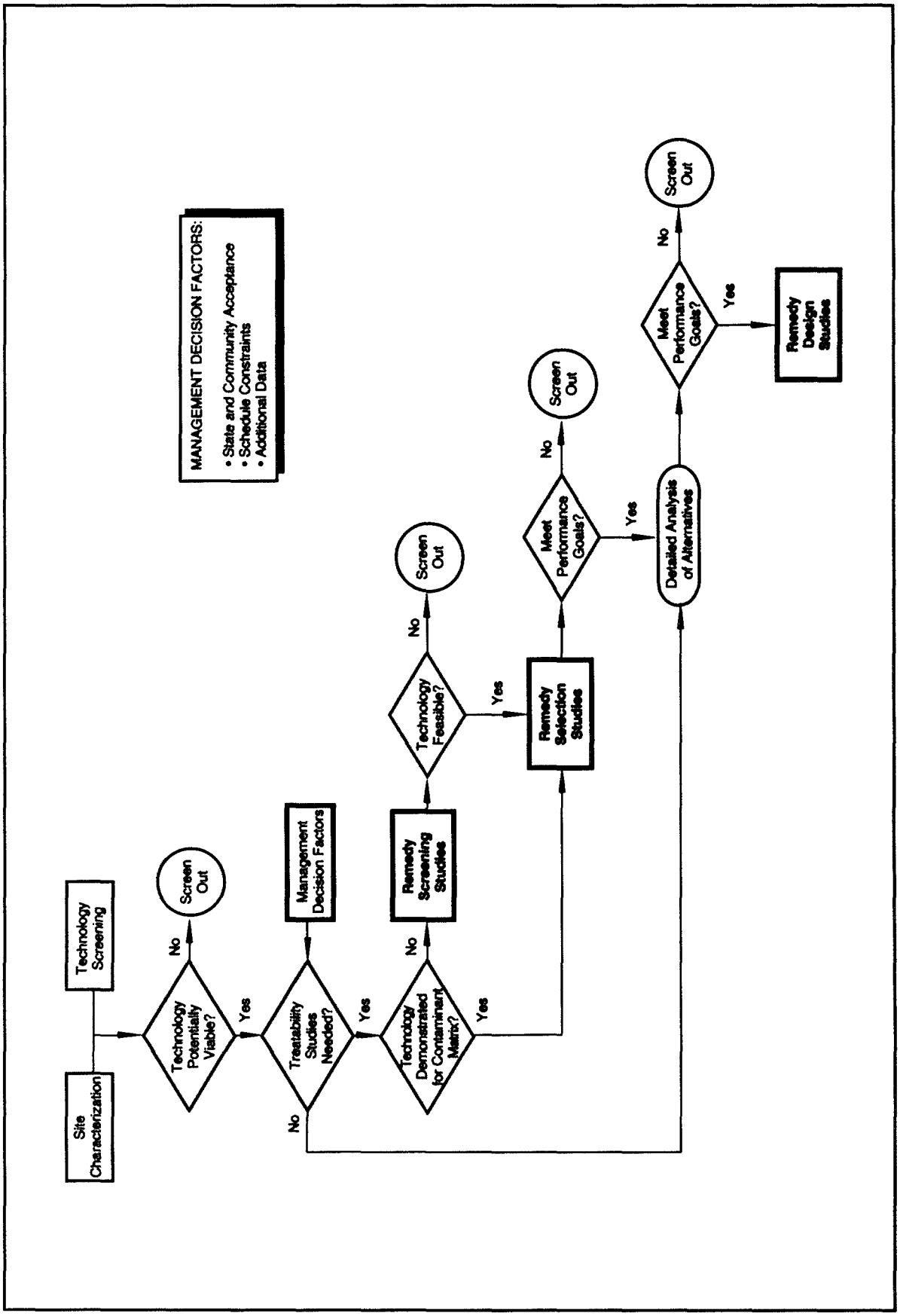

Figure 3-1. Flow diagram of the tiered approach.

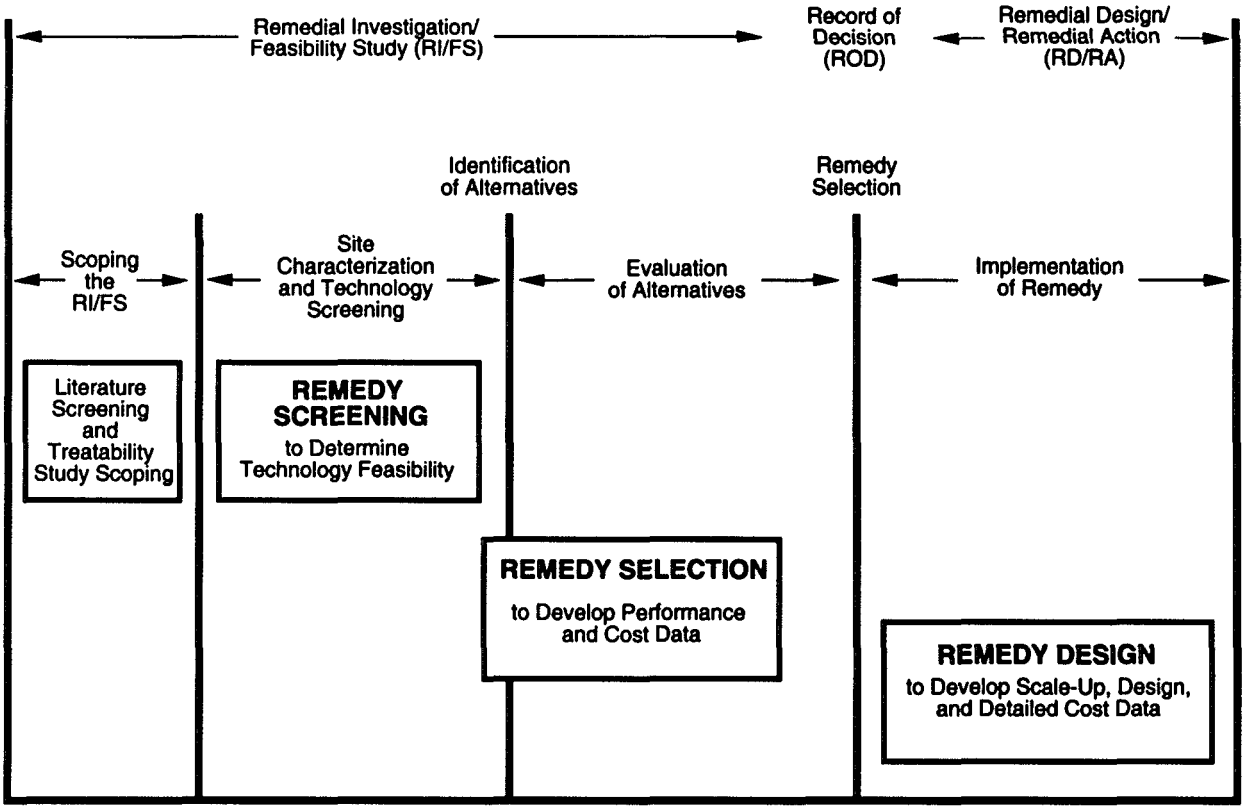

Figure 3-2. The role of treatability studies in the RI/FS and RD/RA process.

not need remedy screening studies to determine whether it has the potential to work. Rather, it may go directly to remedy selection to verify that performance standards can be met.

Figure 3-2 shows the relationship of three levels of treatability study to one another and to the RI/FS and RD/RA processes. Remedy screening tests are designed to occur early in the RI/FS process when a minimum of site characterization data is available. Remedy screening is used to identify alternatives for consideration in remedy selection. Later in the RI/FS, remedy selection is used to develop cost and performance data for the evaluation of alternatives prior to the record of decision (ROD). During the remedy implementation phase (after the ROD), remedy design studies provide detailed cost and design information for full-scale implementation.

3.2 APPLICATION OF TREATABILITY TESTS TO SVE

The determination of the appropriate level of a treatability study is dependent on the literature available on the applicability of SVE to the contaminants of interest, the judgment of technical experts, and site-specific factors. The first two elements–the literature search and expert consultation–are critical factors in determining whether additional data or a treatability study are needed. Previous studies or actual implementation at essentially identical site conditions may preclude the need for additional studies. The basis for such a decision should be well documented.

Treatability testing for SVE may involve column tests, field air permeability measurements, mathematical modeling, and pilot testing. It will generally not be possible to conduct all of these tests during the 24-month RI/FS timeframe. It is therefore important to anticipate the degree of treatability testing early in the RI/FS time frame so that ROD target dates can then be adjusted accordingly. Figure 3-3 shows the general sequence of treatability studies for SVE in the RI/FS process. SVE can be eliminated from further consideration at any one of the steps shown. Certain steps can be skipped if the information available at the previous step indicates the success of SVE is very likely and the proposed step will provide little additional information.

SVE treatability study objectives must meet the specific needs of the RI/FS. There are nine evaluation criteria

specified in the EPA's RI/FS Interim Final Guidance Document (OSWER-9335:301).[23] Treatability studies can provide data by which seven of these criteria may be evaluated. These seven criteria are as follows:

- Overall protection of human health and environment
- Compliance with applicable or relevant and appropriate requirements (ARARs)
- Long-term effectiveness and permanence
- Reduction of toxicity, mobility, or volume through treatment
- Short-term effectiveness
- Implementability
- Cost.

The first four criteria deal with the degree of contaminant reduction achieved by the SVE process. How "clean" will the treated soil be? Will the residual contaminant levels be sufficiently low to meet the risk-based maximum contaminant levels established to ensure protection of human health and the environment? Have contaminant toxicity, mobility, or volume been reduced through treatment? Column tests for remedy selection show the technology's MAXIMUM POTENTIAL to meet the first four criteria. A successful column test for remedy selection only shows that SVE will meet the required target concentrations under idealized conditions. The results of successful column tests must be combined with air permeability data and mathematical modeling to check on the implementability of the technology at the specific site. Even after these steps are taken, there may be a high degree of uncertainty as to the ability of the technology to reach the contaminant target levels in a reasonable time.

Long-term effectiveness indicates how effective a treatment will be in maintaining protection of human health and the environment after the response objectives have been met. Basically, the RPM must evaluate the magnitude of any residual risk as well as the adequacy of controls. The residual risk factor, as applied to SVE, reflects the risks remaining from residual contaminants in the soil, and possibly in the groundwater, after treatment. The reliability of controls factor assesses the adequacy and suitability of any controls that are necessary to manage treatment residuals at the site (e.g., soil from well borings). Such assessments are usually beyond the scope of the column and air permeability tests of the treatability study, but may be addressed conceptually based on their results.

The fifth criterion— short-term effectiveness —addresses the effects of the treatment technology during the time span from remedy construction and implernentation through completion of the response objectives. The estimates of cleanup times related to the concentration of contaminants remaining in the soil, which are obtained through mathematical modeling and testing, provide information on SVE's short-term effectiveness.

The implementability criterion evaluates the technical and administrative feasibility of an alternative. This relates to the availability of required goods and services as well as the technical feasibility of SVE at the site. The key to assessing

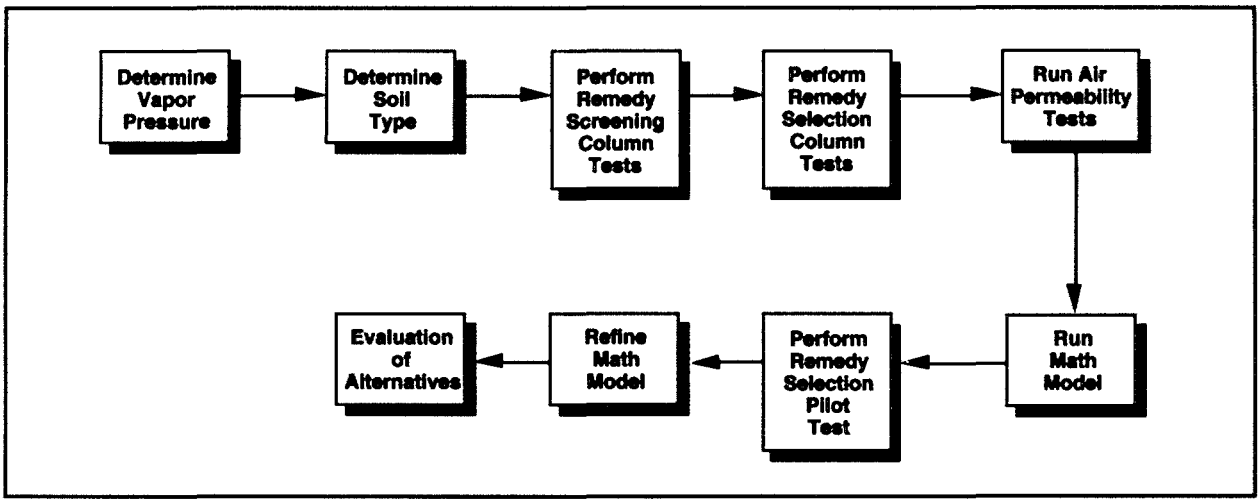

Figure 3-3. General sequence of events during RI/FS for SVE.

SVE under this criterion is whether the contaminated soil has chemical and physical characteristics that are amenable to SVE treatment. The following questions must be answered in order to address the implementability of SVE:

- What are the pneumatic permeabilities of the site soils?
- Are there any soil heterogeneities that would cause air flows to bypass portions of the contaminated zone?
- To what depth does the vadose zone extend?
- What is the water infiltration rate? (A thin vadose zone and a high water infiltration rate may adversely affect implementability.)
- What are the characteristics and quantities of contaminants that will not be removed by SVE?

The seventh EPA evaluation criterion is cost. Column tests for remedy selection, air permeability tests, and mathematical modeling can provide data to estimate the following initial cost factors:

- Design of the full-scale unit, including vapor and contaminated water treatment systems
- Estimated operating costs
- Estimated time required to achieve target concentrations
- Additionally, they provide cost and design estimates for the pilot-scale unit which may be needed for remedy selection or remedy design.

Pilot-scale treatability studies provide additional data to refine these estimates. In many cases, pilot-scale studies will be required due to the uncertainties of contaminant distribution and site geology.

Treatability tests do not directly relate to the final two criteria, State and community acceptance, because these criteria reflect the apparent preferences or concerns about alternative technologies of the State and the community. A viable remediation technology may be eliminated from consideration if the State or community objects to its use. However, treatability studies may provide data that can address State and community concerns and, in some cases, change their preferences.

3.2.1 Remedy Screening

Remedy screening is the first tier of testing. It is used to screen the ability of a technology to treat a waste. These studies are generally low total cost (e.g., $10,000 to $50,000). The column tests require weeks to plan, obtain samples, and execute. A test run usually requires days to complete. Test runs yield data that can be used as indicators of a technology's potential to meet performance goals, and can identify operating standards for investigation during remedy selection. They generate little, if any, design or cost data, and should not form the sole basis for selection of a remedy. It is recommended that the remedy screening tier be skipped for evaluation of SVE technology when the vapor pressure of the target contaminants equals or exceeds 10 mm Hg. When remedy screening is performed, a column test is operated until 2,000 pore volumes of air are passed through the column (about 6 days of operation). An air-filled pore volume is the total soil volume available for air (i.e., pore volume = total volume minus volume occupied by solids and liquids) in the soil sample being tested in the column. The passage of 2,000 pore volumes of air through a column is comparable to the volumetric throughput of air during approximately 3 to 6 years of SVE operation in the field.

Column tests for remedy screening answer the question: Is SVE a potentially viable remediation technology? These tests provide qualitative information for the evaluation of SVE performance on a particular contaminant. The tests focus on whether SVE removes contaminants of interest without regard to reaching an endpoint. They may give a crude estimate of the time required to meet an endpoint during a column test for remedy selection. Normally the soil gas concentration of the target contaminants would be monitored during the test. A reduction of 80 percent or more of the soil gas concentration of the target contaminants shows that SVE is potentially viable and that column tests for remedy selection should be conducted as shown in Figure 6-1. If a substantial reduction (>95 percent) in the soil gas concentration of the target contaminants has occurred, the RPM may choose to have the residual soil ftorn the column test analyzed. In this case, removal of the target contaminants to below the anticipated target level in the soil shows that column tests for remedy selection may be skipped, and air permeability tests should be conducted. The evaluation of treatablility test results is discussed further in subsection 6.1. Example 2 illustrates the use of column tests for remedy screening of SVE.

3.2.2 Remedy Selection

Remedy selection testing is the second tier of testing. It is used to evaluate the technology's performance on a contaminant-specific basis for an operable unit. These studies generally have moderate total costs (e.g., $30,000 to $100,000 for SVE). These tests require months to plan, obtain samples, and execute. Column tests for remedy

selection require weeks of actual testing time. Air permeability tests require hours to days for each field test, depending on site conditions. Pilot-scale testing, if required, increases remedy selection testing time to weeks or months (planning and execution require months) to complete, with much higher costs (e.g., $50,000 to $250,000). They yield data that verify the technology's ability to meet expected cleanup goals and provide information in support of the detailed analysis of the alternative (i.e., seven of the nine evaluation criteria).[3] Column tests for remedy selection are run until an endpoint is achieved. Since SVE is an in situ technology, the laboratory treatability studies are supplemented with field air permeability tests and mathematical modeling during the remedy selection phase. The combination of column tests, field air permeability tests, and mathematical modeling provide quantitative and qualitative performance information for the evaluation of SVE, as well as cost and design information. However, due to the high degree of uncertainty associated with implementation of SVE, pilot-scale testing is often performed to support the remedy selection phase. SVE is evaluated during the remedy selection phase as follows:

- Bench-scale column tests are performed to establish whether SVE can meet the site performance goals.
- Following successful column tests for remedy selection, field air permeability tests are conducted to check SVE implementability.
- Column tests for remedy selection and field air permeability tests are supplemented with mathematical modeling.
- If warranted, pilot-scale testing for remedy selection is performed.

Column tests for remedy selection establish whether SVE can potentially meet expected target concentrations for a given site. They can also provide information on the contaminant distribution functions (partition functions) for use with certain mathematical models. These column tests do not, however, give reliable air permeability data. They do not permit the determination of whether mass transfer limitations will occur in the field application of SVE. Table 3-1 presents the advantages and limitations of column tests.

Column tests for remedy selection are not generally necessary for several site conditions. Column tests may not be required for very volatile compounds, such as those with a vapor pressure $ 10 mm Hg. If column tests for remedy screening show that contaminant target levels can be achieved, column tests for remedy selection may be skipped.

Example 2. Remedy Screening

Background

In Example 1, recommendations were made to proceed with remedy selection treatability tests to check the potential feasibility of SVE. Styrene and 1,2-dichlorobenzene were chosen as indicator contaminants.

Results of Testing

Column tests for remedy screening were conducted by a contractor in accordance with the procedures, equipment, and test designs presented in Section 4.2 of this document. After 2,000 air-filled pore volumes had passed through the column, the soil gas concentration of styrene and 1,2-dichlorobenzene had been reduced by about 82 percent and 84 percent, respectively.

Decision

Since the tests indicated that SVE could potentially remove the contaminants, the RPM decided to conduct remedy selection treatability tests. If the test had shown a greater reduction in the soil gas concentration (e.g., 95 percent), the RPM could decide to have the soil from the completed column test analyzed for the indicator compounds. Then the residual concentrations could be compared to anticipated cleanup targets. If the residual concentrations were less than the cleanup targets, column tests for remedy selection could be skipped as shown in Figure 6-1.

Table 3-1. Column Test Advantages and Limitations

ADVANTAGES	LIMITATIONS
1. Accelerates the SVE process to permit evaluation of maximum contaminant removal potential.	1. Stripping air always has good access to the contaminants throughout the column. Air flow to different zones varies widely in the field.
2. Gives order of magnitude information on the partition coefficients needed for mathematical modeling.	2. Diffusional processes are not properly modeled.
3. Order of magnitude air permeability measurements may be obtained with "undisturbed" samples.	3. More accurate air permeability results must be obtained through field air permeability measurements.
	4. Standard procedures must be formulated and validated.

Column tests are not practical for sites with fractured bedrock and for sites containing very heterogeneous fill consisting of large pieces of debris. Pilot tests to measure the contaminant removal rate from the contaminated bedrock are needed to evaluate the feasibility of SVE.

Column tests require a discrete sample. From 2 to 8 kilograms (kg) of contaminated soil are needed to perform a column test. The duration and cost of column testing for remedy selection of SVE depend primarily on the soil characteristics, the contaminants, the analyses being performed, and the number of replicates required for adequate testing. The laboratory portion of remedy selection column testing can normally be performed within 3 to 7 weeks. Total costs, including planning, sampling, execution, and report, range between $30,000 and $50,000.

Air permeability tests should be conducted at the site after the column tests show that SVE can meet the expected target concentrations. Air permeability tests provide information on the air permeability of the different geological soil formations in the vadose zone at the site. Typically, results are expressed as k with dimensions in length squared. The customary unit of k is the darcy (1 darcy = 0.987×10^{-8}, cm^2). The data can be used to estimate onsite air flow patterns and to determine if the slow process of diffusion will limit the application of SVE as a remediation process. Air permeability tests may not be necessary for remedy selection when the estimated air permeability of site soils is high (k $ 10^{-6} cm^2). Table 3-2 presents the advantages and limitations of field air permeability tests.

Air permeability data can also be used during the initial design to determine the radius of influence of vapor extraction wells, expected air-flow rates, moisture removal rates, and initial contaminant mass removal rates (when the effluent gas is analyzed). The air pertneability tests cost about $1,500 to $2,500 per well. Total costs may run from $10,000 to $50,000. They are normally performed within a time range of 2 to 5 days.

Table 3-2. Field Air Permeability Test Advantages and Limitations

ADVANTAGES	LIMITATIONS
1. Provides the most accurate air permeability measurements.	1. May give low air permeability measurements in soil zones where significant water removal may later take place during the operation of the SVE system.
2. Permits measurements of the air permeability of several geological strata.	2. Does not show the location of NAPL pools.
3. Measures the radius of influence in the vicinity of the testing point.	3. Requires a health and safety plan and may require special protective equipment.
4. When coupled with analytical measurements, gives information about initial contaminant removal rates.	4. May require an air permit on Superfund sites.
5. Provides information for designing a pilot-scale test.	5. Cannot be used to measure air permeabilities in a saturated zone that will be dewatered prior to application of the technology.

Mathematical modeling[3][8][12][13][15][16][39][40][41] can be used to provide rough estimates of the cleanup times required to achieve contaminant reductions to the target goals. These predictions are needed to evaluate health risks associated with short-term effectiveness and to estimate the total cost of the remediation. Mathematical modeling can also provide sensitivity analyses for critical variables, such as air permeability, radius of influence, and vacuum applied![8][41] To be most effective, the modeling should use field-measured data on contaminant concentrations, air permeability, location of contaminants, soil porosity, soil moisture content, and soil temperature. Partition coefficients are obtained from measurements taken during column tests for remedy selection. Field and column test data are the input variables to the model. Table 3-3 presents advantages and limitations of mathematical modeling.

For complete characterization of the SVE process, the mathematical model must simulate both the flow field in the soil and the behavior of the contaminants within the soil matrix. There are three major classes of models:

- Models that simulate air flow patterns
- Models that simulate contaminant behavior in a simplified air-flow pattern
- Models that couple air-flow patterns and contaminant behavior.

Models that simulate air-flow patterns are useful for designing the SVE system but they are not used for cleanup time predictions. These models, when used with site geologic data, can be important for assessing the potential for difflusion control to be operative at a site.

Models that couple air-flow patterns and contaminant behavior have been used to predict remediation conditions where the vapor phase is in local equilibrium with a liquid.[3][12][13][40] This applies to regimes where Raoult's Law or Henry's Law control contaminant behavior. In these regimes contaminant removal is relatively rapid.

Newly available models simulate SVE in soil matrices where mass transfer limitations from diffusion are important in limiting the rate of VOC removal.[16][39] SVE from such matrices is impeded because the VOCs must diffuse through regions of low permeability (such as clay lenses) to reach the advective soil gas stream. If such processes are rate-limiting, the latter portion of the cleanup shows a slow reduction (tailing) of the soil gas concentrations as a result of diffusion control. Desorption from the soil may control contaminant removal from clayey soils and from soils rich in humic content. Mathematical models for the SVE process that include diffusion control can also include desorption control if suitable data are available.[40]

In general, mathematical models using the local equilibrium assumption provide a lower bound estimate of the time required to remediate a site using SVE. This means that actual remediation times will be greater than those predicted by such mathematical modeling. The local equilibrium assumption posits that the contaminants in the vapor phase remain in equilibrium with the contaminants in the liquid and solid phases as contaminant vapors are carried away by the air.[3][40] If diffusion is limiting the SVE process, these cleanup time estimates may be low by as much as two orders of magnitude. Also die presence of hidden pockets of heavy contamination, unidentified soil heterogeneities, and debris may extend remediation times beyond those predicted by the mathematical models by as much as two orders of magnitude. Therefore, lengthy cleanup time predictions from a model must be seriously considered as an indicator for discontinuing treatability assessments of SVE.

Pilot-scale testing for remedy selection is recommended for sites that have contamination in the bedrock, and

Table 3-3. Mathematical Modeling Advantages and Limitations

ADVANTAGES	LIMITATIONS
1. Provides order of magnitude estimates of SVE cleanup times.	1. Most models underestimate the time required for cleanup. Prediction of a short cleanup time does not indicate that SVE will be successful.
2. A prediction of a lengthy cleanup time based on mathematical modeling is Indicative that the SVE process is not applicable.	2. Different modules must be used to simulate vadous field conditions. These models must be applied carefully.
3. Provides sensitivity analyses for critical variables such as air permeability, radius of influence, partition coefficients, and vacuum applied.	3. There are limited field data available for validation of the mathematical models.

complex sites that are very heterogeneous. Sites that contain pools of NAPL may also require pilot-scale testing. Pilot-scale tests determine whether sufficient air flow can be achieved in the zones of contamination to produce adequate cleanup rates. Pilot-scale data can also be used to determine the radius of influence of the vapor extraction wells, moisture removal rates, and contaminant flowrates.

Example 3 illustrates how column tests, air permeability tests, and mathematical modeling results are applied in the decision-making process. Example 4 shows how a pilot-scale test can verify the results of remedy selection treatability testing. Example 5 presents a case where prescreening indicates that column and air permeability tests are impractical. The contaminant data obtained during remedy prescreening, however, indicates that SVE may be a viable remedial technology. Pilot-scale tests for remedy selection verified SVE as a potential remediation technology.

3.2.3 Remedy Design

Remedy design testing is the third tier of testing and is normally performed after the ROD. It is used to provide quantitative performance, cost, and design information for remediating an operable unit. This level of testing also can produce data required to optimize performance. These studies are of moderate to high cost (e.g., $50,000 to $250,000 for SVE) and may require months to complete. They yield data that verify performance to a higher degree than remedy selection tests and provide detailed design information.

In addition to being used for remedy selection tests at complex sites, pilot-scale field tests are normally required for remedy design. Pilot-scale testing may help identify contaminants or other characteristics that affect the SVE implementability. Physical characteristics of the contaminants may increase maintenance due to blocked wells. Bacterial formation, hardness of the site water, and the

Example 3. Remedy Selection Treatability Studies Using Column Tests and Air Permeability Tests

Background

In Example 2, recommendations were made to proceed to remedy selection treatability tests to further define the feasibility of SVE. Styrene and 1,2-dichlorobenzene were chosen as the indicator contaminants.

Results of testing

Column tests for remedy selection were conducted by an SVE contractor/vendor in accordance with the procedures, equipment, and test designs presented in Section 4.2. Data from these tests showed that both 1,2-dichlorobenzene and styrene could be removed from the soil to below the target clean up goals.

Air permeability tests were conducted in accordance with the procedures, equipment, and test designs presented in Section 4.2. Soil permeability to air flow in the contaminated soil was calculated to be greater than 10^{-10} square centimeters (cm^2).

Mathematical models were based on field air permeability and column test results, as well as the prescreening site, soil, and contaminant data. They indicated that a 90 percent cleanup (removal of the contaminants) could be accomplished in 1 to 4 years, depending on the input variables employed in the modeling runs.

Decision

Since the tests and mathematical modeling indicated that a relatively short cleanup time was possible, the RPM decided that SVE was a promising technology for site remediation. However, because of the uncertainties of modeling in situ technologies, the RPM decided that an onsite pilot test for remedy selection was needed to confirm this conclusion.

Example 4. Remedy Selection Treatability Studies Using Pilot-Scale Tests

Background

Pilot-scale tests were conducted at the site, described in Example 1, using a commercial-size mobile test rig. The procedures, equipment, and test designs were in accordance with those discussed in Section 4.2.

Results of Pilot-Scale Test for Remedy Selection

The pilot-scale tests had excellent results. The contaminant removal rates were in excess of 200 pounds per day (lb/d). The measured 45 feet (ft) radius of influence was reasonable, indicating that only 20 wells would be required for the 3-acre site. Based on these tests and the additional modeling studies that were conducted, remediation of the site to cleanup levels was predicted in 5 to 7 years.

Decision

The pilot-scale tests showed that the technology was likely to be implementable and cost effective at the site. The RPM decided that SVE was a viable remedial technology for the site.

Example 5. Treatability Study Using Fractured Bedrock

Background

A former 2-acre disposal site in the northeastern United States was used to dispose of a number of solvents, including trichloroethylene, 1,1,1-trichloroethane, and carbon tetrachloride, in a shallow impoundment over the last 25 years. During that time, the chemicals seeped into cracks in the bedrock that formed the floor of the impoundment.

Decision Based on Remedy Screening

Column tests cannot be performed on bedrock. However, all of the listed compounds are highly volatile with vapor pressures exceeding 120 mm Hg. Because of the complex site geology, the RPM decided that pilot-scale testing should be conducted for remedy selection. The purpose of the pilot-test was to determine whether SVE could remove significant quantities of the contaminants from the bedrock to mitigate further migration.

Pilot-Scale Result

The pilot-scale tests showed that an airflow of 15 standard cubic feet per minute (scfm) could be sustained and that contaminants were removed at a rate of 20 lb/d. This was considered to be an adequate removal rate. SVE was retained for further consideration as a remedial technology during the evaluation of alternatives because it was the only viable treatment option for the bedrock.

presence of viscous organics have caused blockages in vapor extraction wells. Remedy design studies yield information on process upsets and recovery. They are used to improve cleanup time estimates and indicate the need for additional wells. These studies can also provide estimates of sidestream and residuals generation. Pilot-scale SVE systems can be mobile or constructed at the site. The vapor extraction wells installed for a successful pilot-scale test are often incorporated in the full-scale system.

SECTION 4
TREATABILITY STUDY WORK PLAN

Section 4 of this document is written assuming that a Remedial Project Manager is requesting treatability studies through a work assignment/work plan mechanism. Although the discussion focuses on this mechanism, it would also apply to situations where other contracting mechanisms are used.

This chapter focuses on specific elements of the Treatability Study Work Plan that relate to SVE treatability studies. These elements require detailed discussions that are not presented in other sections of this document. These elements include test objectives, experimental design and procedures, equipment and materials, reports, schedule, management and staffing, and budget. These elements are described in Sections 4.1 - 4.9. Complementing these subsections are Section 5 (Sampling and Analysis Plan, which includes a Quality Assurance Project Plan) and Section 6 (Treatability Data Interpretation). The Work Plan elements for an SVE Treatability Study are listed in Table 4- 1.

Table 4-1. Suggested Organization of SVE Treatability Study Work Plan

1. Project Description	
2. Remedial Technology Description	
3. Test Objectives	(Section 4.1)
4. Experimental Design and Procedures	(Section 4.2)
5. Equipment and Materials	(Section 4.3)
6. Sampling and Analysis	(Section 4.4)
7. Data Management	
8. Data Analysis and Interpretation	(Section 4.5)
9. Health and Safety	
10. Residuals Management	
11. Community Relations	
12. Reports	(Section 4.6)
13. Schedule	(Section 4.7)
14. Management and Staffing	(Section 4.8)
15. Budget	(Section 4.9)

Carefully planned treatability studies are necessary to ensure that the data generated are useful for evaluating the validity or performance of the technology. The Work Plan sets forth the contractor's proposed technical approach to the tasks outlined in the RPM's Work Assignment. It also assigns responsibilities, establishes the project schedule, and estimates costs. The Work Plan must be approved by the RPM before work begins. The generic guide[24] presents additional detail on these procedures.

4.1. TEST GOALS

Setting goals for the treatability study is critical to the ultimate usefulness of its results. Goals must be well defined before the study is performed. Each tier or phase of the treatability study program requires performance goals appropriate to it. For example, column tests for remedy selection could answer the question, "Will SVE reduce contaminants to the required concentrations?" The remedy selection column tests measure whether the process could reduce contamination to below the anticipated performance criteria to be specified in the ROD. This indicates whether the process has potential applicability at the site and further testing is warranted.

The ideal performance goals are the cleanup criteria for the operable unit. For several reasons, such as continuing waste analysis, applicable or relevant and appropriate requirement (ARAR) determinations, and risk assessment preparations, some cleanup requirements am not finalized until the ROD is signed. Nevertheless, definite treatability study goals must be established as a measuring stick before the study is performed. In many instances, this may entail an educated guess about projected cleanup levels by the RPM. Estimated cleanup levels should consider these objectives:

- Provide long-term effectiveness
- Comply with land disposal restrictions
- Make the waste acceptable for delisting

- Achieve State or Regional standards for a similarly contaminated site.

Cleanup criteria directly relate to the final management of the material. They may dictate the need for complementary treatment processes to remediate the entire wastestream (i.e., treatment trains). For example, SVE can treat volatiles; a follow-on technology may be needed to treat metals and nonvolatiles, depending on site characteristics. Such combinations must be considered during the planning of the treatability studies and in the overall remedy evaluation phase.

The development of graduated goals for contaminant reduction may fully address these complex needs. For example, if SVE can reduce soil contaminant levels to 50 parts per billion (ppb), no further treatment may be necessary. If, however, SVE technology can only reduce the contaminant level to 5 ppm, treatment with another technology may be mandated. If both residual volatile organics and nonvolatile contaminants are at concentrations that require further treatment, the reduction of soil gas levels to minimize fugitive emissions (e.g., during excavation) may govern the cleanup criteria for SVE as one stage in a treatment train.

4.1.1 Remedy Screening Goals

Bench-scale column tests are used for remedy screening. Remedy screening goals should simply require that the contaminant of interest shows a greater than 80 percent reduction in soil gas concentration. The goal is to show SVE has the potential to work at the site. Frequently, sufficient information exists about soil conditions and contaminant volatility so that remedy screening tests will not be necessary.

4.1.2 Remedy Selection Goals

Column tests for remedy selection can determine if SVE has the potential to meet ultimate cleanup levels at a site. When SVE is the primary treatment technology, the suggested cleanup goals are set by the ARARs. If no ARARs have been established for the site, a conservative goal must be selected. Such a conservative goal would be to show removal to below drinking water standards. This goal would require that the leachate from Toxicity Characteristic Leaching Procedure (TCLP) analysis of soil treated in the completed column tests meet the drinking water standards for the contaminants of interest. The rationale for recommending this conservative goal is as follows:

- Site cleanup goals are often aimed at protecting drinking water aquifers

- Soil gas concentrations that are measured at the column outlet may not guarantee adequate cleanup

- Measurement of total concentrations in the treated soil is too conservative because it measures both leachable and nonleachable components

- TCLP is a standard procedure for characterizing hazardous wastes for regulatory purposes.

If the particular site does not require cleanup to drinking water standards, the RPM may specify a less stringent preliminary or target cleanup goal for treatability tests.

Field air permeability tests are conducted during remedy selection. A field air permeability of greater than 10^{-10} cm^2 for all soil types and geological formations appears to be the lower feasibility limit for site air permeability. If the permeability is lower, the technology may not be feasible. However, as was discussed in subsection 2.2.3, a low permeability layer may sometimes be used as an advantage in applying SVE technology.

Pilot-scale testing frequently is used during remedy selection, Pilot-scale tests usually encompass the operation of a mobile SVE treatment unit onsite for a period of 1 to 2 months. For more complex sites (e.g., sites with different types of contaminants in separate areas or with varying geological structures), the test rig may need to be moved around the site, and much longer overall testing periods may be required.

The goal of pilot-scale testing for remedy selection is to confirm that the cleanup levels and treatment times estimated in Section 4.1.1 are achievable. This goal is accomplished by checking for diffusion control or problems due to the site conditions.

4.2 EXPERIMENTAL DESIGN AND PROCEDURES

Section 4.2 discusses the experimental designs and procedures required in the Work Plan for die remedy selection phase. Careful planning of experimental design and procedures is required to produce adequate treatability study data. The experimental design must identify the critical parameters and determine the number of replicate tests necessary.

System design, test procedures, and test equipment will vary among vendors. For this reason, this manual will not strictly define test procedures. The information presented in this section provides an overview of the test equipment and procedures as these relate to each type of test.

4.2.1 Remedy Screening

Column tests performed during the remedy screening phase of the treatability study are short-term tests (6-day testing period) that provide qualitative information for the evaluation of SVE performance on a particular contaminant. These tests use column test procedures for remedy selection similar to those presented in Appendix A. After 2,000 air-filled pore volumes have passed through the column, the test is completed and the recommended analyses are performed. This typically simulates the total air-filled pore volume throughput for several years of field operation. The number of replicate tests and the quality assurance/quality control (QA/QC) levels are minimal in remedy screening studies.

4.2.2 Remedy Selection

Remedy selection testing is conducted both in the laboratory and in the field. Each test has a specific purpose and critical variables. These variables influence the required number of tests and the QA/QC levels. Mathematical modeling also has distinct requirements.

Column Tests

Properly designed column tests determine the practical cleanup level limits of the contaminated soil and the partition coefficient for use with mathematical modeling. The key design variables for SVE column tests are contaminant concentrations and air-flow rates.[3][12][40] Contaminant levels of samples used for the column tests should reflect the maximum concentrations of the indicator contaminants at the site. If an anomalously high maximum concentration exists at the site, professional judgment should be used to select the samples for the column tests.

The flowing air acts as a carrier for contaminants. Since air-flow rates vary within the zone of influence of a vapor extraction well, column tests should be run at a minimum of two air-flow rates. Separate tests should be performed at air-flow rates ranging from 0.01 liters per minute (L/min) to 0.05 L/min and at 0.5 L/min to 1.0 L/min to check sensitivity to air-flow. These rates correspond to a 2.5 inch diameter column. For larger diameters, the flow should be adjusted in proportion to the increased area. Since the air flow through the column depends on pressure drop, vacuum levels for each air-flow sensitivity test should be recorded.

Four column tests should be performed to evaluate data repeatability and to determine the end-point. Three columns should be run at the higher air-flow rates to determine the achievable end-point for comparison with the target concentration goals. A fourth (duplicate) column test should be conducted at the higher air-flow rates to check on the repeatability of the test. Use of these additional columns to determine the end-point is explained in greater detail below.

The following procedure for determining the target end-point is recommended:

1. Take composite or core samples in the field (see section 4.4.1). Analyze them for soil gas and total contaminant levels. If ARARs or soil cleanup levels have not been established, perform the TCLP procedure, and analyze the leachate for contaminants of interest.

2. Run four columns simultaneously under identical conditions. Using a simple mathematical model and the first day's operating data, estimate the time to reach the required cleanup level or target end-point. After running the test for 1/2 of the estimated time to reach the target end-point, stop testing one column. Repeat the analyses specified in step 1 on the soil from the column.

3. Use the data collected during step 2 to refine the endpoint prediction with a mathematical model for column operation.[3][40]

4. At the end of the time predicted to reach the end-point predicted by the model, stop testing a second column. Repeat the analyses specified in step 1.

5. If the soil contaminant levels are above the target cleanup levels, or if ARARs have not been established, and TCLP shows contaminant levels in the leachate to be above drinking water standards, continue the test with the other columns as discussed in steps 7 and 8.

6. If the contaminant levels are below the target cleanup levels, stop the test and analyze the third column for repeatability.

7. Use the soil gas data, total contaminant levels, and TCLP (if necessary) collected from the preceding steps to further refine the mathematical model. Predict the end point of the third column.

8. When the third column reaches the time predicted for the end-point, stop both the third and fourth columns and analyze them for repeatability.

A fifth column may be run concurrently at low air-flow rates to verify partition function data.

Measurements taken prior to the column tests consist of analyses of contaminant concentrations in the soil matrix, in TCLP leachate, and in the head space. Soil porosity, bulk density, and moisture content are also measured. Measurements taken during the tests are column pressures, contaminant concentrations in the offgas, air-flow rates, and ambient air dry-bulb and wet-bulb temperatures. After the test, contaminant concentrations in the soil matrix and in TCLP leachate are measured for comparison with the target concentrations of the treatability study.

Figure 4-1 shows an example column test apparatus. It consists of a stainless steel or glass column with a 2.5-in minimum diameter (4-in diameter columns are commonly used) and a 12-in minimum filled length (filled lengths of 2-ft are not uncommon). This is connected with glass or stainless steel tubing to a vacuum pump which pulls air through the column. Plastic tubing is not recommended because it may react with some contaminants. A humidifier should be placed upstream of the column to ensure that air with a constant humidity is supplied throughout the test. A pollution control device appropriate to the types and concentrations of the contaminants should be located downstream of the column to protect the laboratory personnel. Instruments for measuring air-flow rate, air temperature, and air pressure should be included. Pressure measurements should be taken in the vicinity of the gas sampling ports. These are located immediately upstream and downstream of the column and downstream of the carbon bed. A gas chromatograph is recommended to measure contaminant concentrations. Appendix A presents a general procedure for running a column test.

Air Permeability Tests

Air permeability tests determine whether sufficient air flow can be attained in the zones of contamination to permit adequate cleanup rates, Air permeability should be measured for each geological unit at the site. These measurements should be repeated on a grid pattern of appropriate area in zones of known contamination. The size of the selected pattern will depend on the complexity of the site. Extraction probes are used for depths up to 20 ft. Vapor extraction wells are used for depths in excess of 20 ft.

The key control variable for air permeability testing is the air-flow rate through the vapor extraction probe or well. The key measured variables are vacuum levels, air-flow rates and soil gas pressure or vacuum levels at monitoring probes or wells. Measurements of effluent

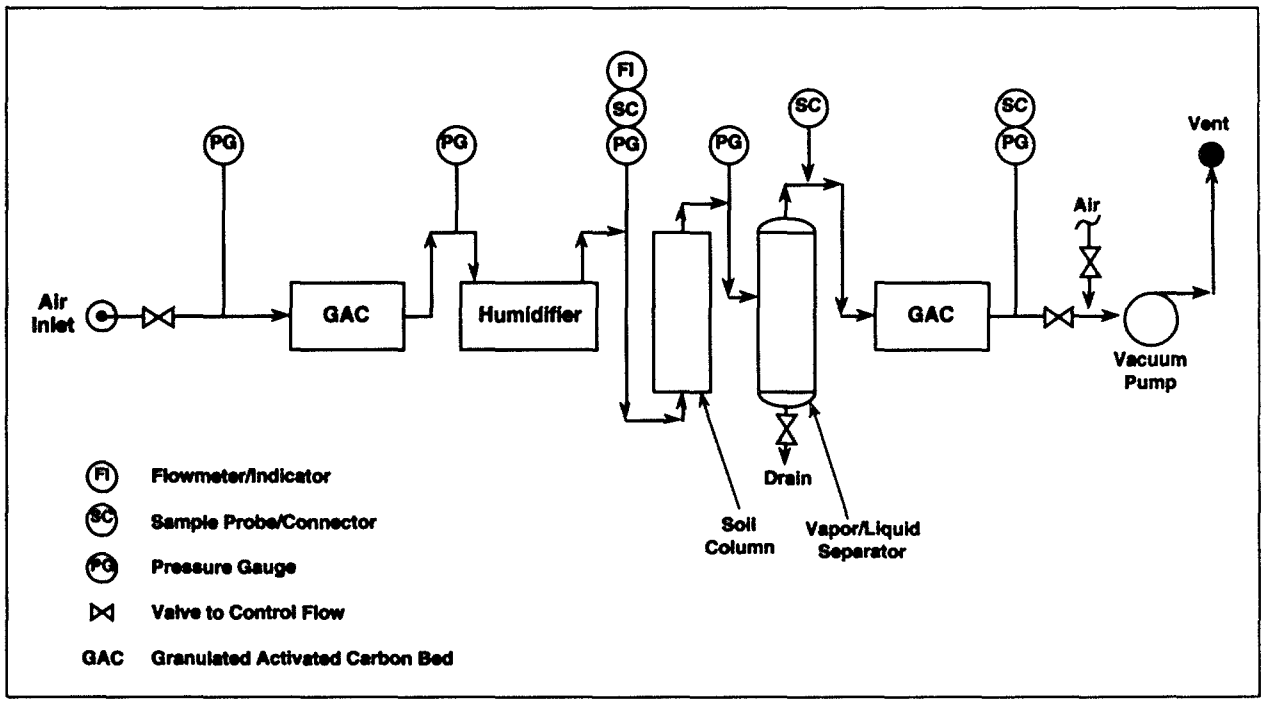

Figure 4-1. Diagram of typical column test apparatus.

contaminant concentrations and moisture levels in the offgas are recommended.

Figure 4-2 shows a typical air permeability test.[12] A vapor extraction probe or extraction well is connected to a vacuum pump. Piezometric probes measure soil pressure levels at various horizontal and vertical distances from the extraction point. This apparatus also contains a vapor treatment unit. Instrumentation includes a flowmeter, pressure or vacuum gauges, and a vapor sampling port. Contaminant concentrations may be measured with a portable gas chromatograph (GC), or gas samples may be collected for laboratory analysis. Appendix B presents a general procedure for running an air permeability test.

An air injection well may be used instead of a vapor extraction well. If air injection is used, at least one air permeability measurement should be made using a paired-well system consisting of an injection and a vapor extraction well. The use of an injection well may cause uncontrolled venting of VOCs to the atmosphere.

Mathematical Modeling

Since mathematical modeling of SVE requires special expertise, the OSWER Technical Support Project (see Section 2.2.2) should be consulted for technical assistance in applying mathematical models. Improper use of mathematical models can lead to incorrect conclusions. Requests for assistance from the EPA TSP must be directed through the RPM. Section 3.2.2 presents an overview of the modeling process.

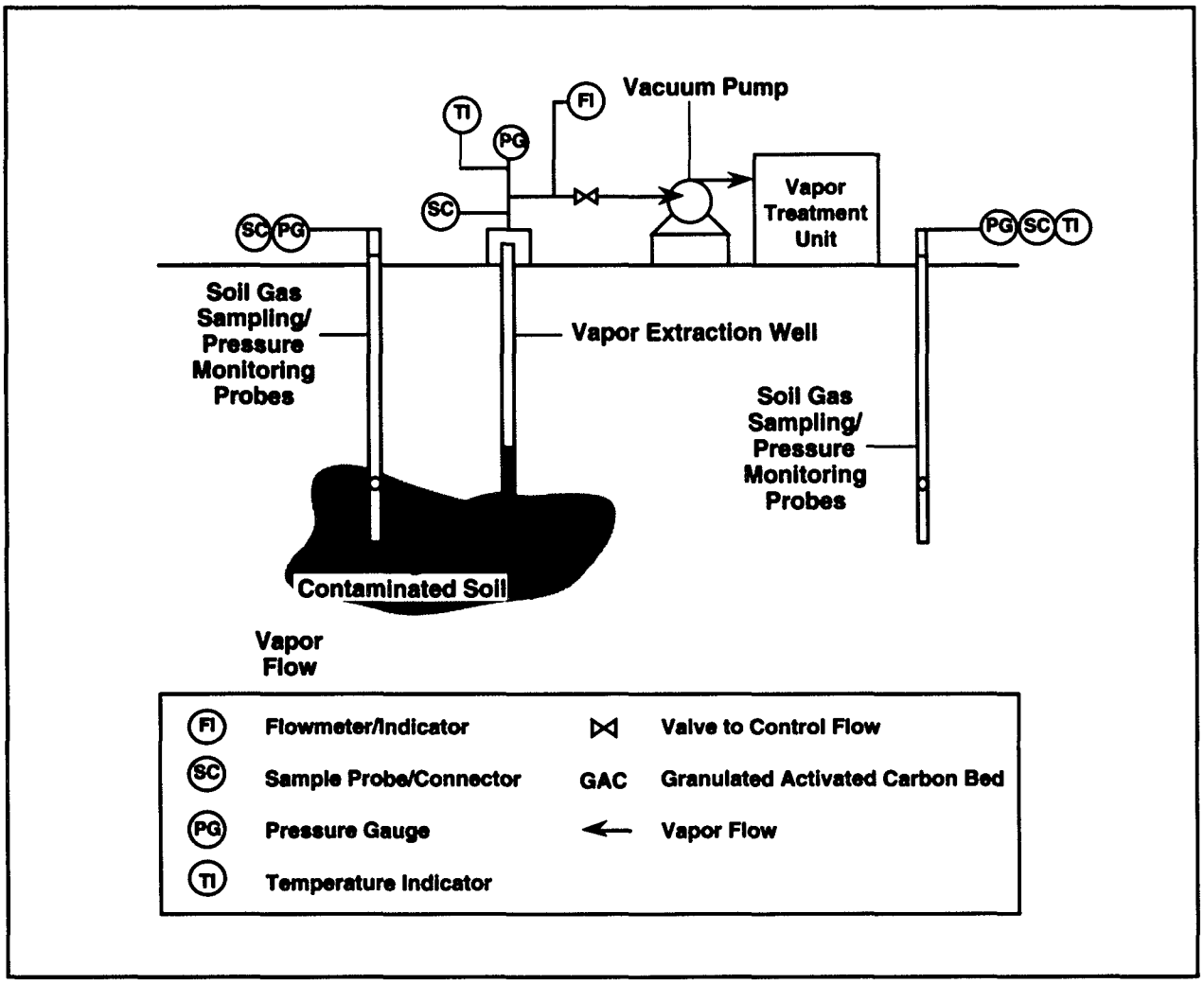

Figure 4-2. Schematic for typical air permeability test.

Pilot-Scale Tests

Pilot-scale or field venting tests determine whether sufficient air flow can be attained in selected zones of contamination to produce adequate cleanup rates. The design should incorporate the available field data, including air permeability measurements and the locations and concentrations of contaminants. Mathematical modeling may supplement the above data.

The key control variable for field vent tests is vacuum level at the extraction well. The key measured variables are the vacuum levels (at various locations to establish the radius of influence), air-flow rates, soil gas pressure levels, and soil and gas temperatures. Measurements of effluent contaminant concentrations and moisture levels from the extension well am also very important. These provide contaminant and moisture-removal rates when they are combined with the air-flow rates. The amount and composition of liquids collected by the vapor/liquid separator should also be measured.

A pilot-scale field vent test system consists of the same elements identified for a typical air permeability test rig, as presented in Figure 4-2. The above-ground portion of the pilot-scale SVE system is usually mounted on a mobile unit. The below-grade portion normally consists of one or more extraction wells, and three or more probes or monitoring wells to measure soil pressure levels at various depths and distances from the extraction point. Air injection wells may also be used to examine the effect of air injection.

The extraction wells are connected in a manifold arrangement. The wells encompass a specified sector of the overall site. Although the well arrangement is site-specific, the pilot-scale tests commonly cover an area ranging from several hundred to several thousand ft^2.

An extraction well, as shown in Figure 4-3, consists of a slotted plastic pipe.[31] The slots form a well screen. They are positioned according to the location of the contaminants and the underlying impermeable layer. However, stainless steel or another material may be required if the plastic is not compatible with the contaminants.

The plastic or stainless steel manifold is connected to the auxiliary equipment mounted on the mobile unit. The auxiliary equipment consists of a blower or vacuum pump, air-flow meters, pressure gauges, vacuum gauges, thermometers or temperature indicators, an air-water separator, post-treatment equipment, and a power supply. Sampling ports should be installed at the exit of the extraction well, in the piezometric probes, and at the outlet of the post-treatment equipment. An impermeable

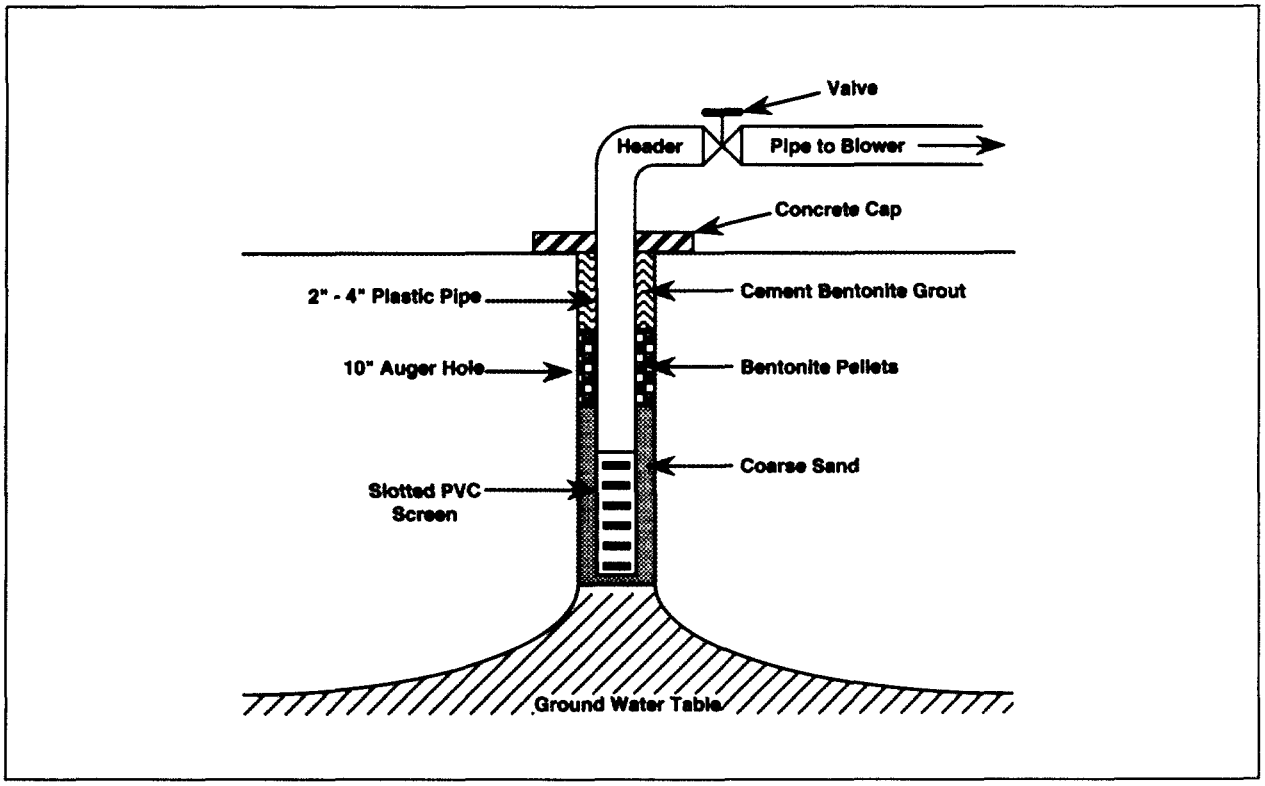

Figure 4-3. Extraction well construction details.

cap may be installed to prevent water infiltration and to increase the radius of influence. If pilot studies were used for remedy selection, the same system may be used for remedy design studies.

If the results from the field vent tests verify site remedy objectives, the pilot-test system can be expanded to the entire site by replacing the vacuum pump and vapor treatment unit with commercial-scale site-specific equipment connected to an expanded manifold of extraction wells. Monitoring wells would also be added. Multiple systems, similar in capacity to the pilot-scale system, can also be employed to treat the overall site.

Post-treatment equipment usually consists of carbon adsorbers for both offgas and water treatment. However, incineration, catalytic oxidation, and condensation may also be used for offgas treatment. Air stripping with a carbon adsorber polishing step or biological treatment may also be used for water treatment. Appendix C presents a general procedure for running a field vent test.

4.3 EQUIPMENT AND MATERIALS

This part of the Work Plan should list the equipment and materials required for each type of remedy selection test. Section 4.2 addresses specific equipment and materials, while describing the designs and procedures for the tests.

4.4 SAMPLING AND ANALYSIS

The Work Plan should address the tests needs for sampling and analysis work, as well as quality assurance support, in the Sampling and Analysis Plan (SAP). The SAP, which will be prepared after Work Plan approval, helps to ensure that the samples are representative and that the quality of the analytical data generated is generally known. The SAP addresses field sampling, waste characterization, and the sampling and analysis during treatability testing. It consists of two parts: the Field Sampling Plan (FSP) and the Quality Assurance Project Plan (QAPjP). Further discussion of the FSP and QAPjP and specific sampling and analytical tests and protocols are presented below, in Section 5, and in the generic guide.[24]

4.4.1 Field Sampling

This subsection discusses sampling activities associated with SVE testing for remedy selection. Composite samples of soil should be prepared for the column tests. Compositing reduces the variability in contaminant concentration, and provides more accurate soil concentration data before and after the column testing. Some volatiles will be lost during compositing. Typically, the volatile contaminants lost to any significant extent would be those that are easily removed in the column tests. However, because the goal of column tests is to establish the potential of SVE to meet

Table 4-2. Testing Applications – Considerations for Composite and Undisturbed Samples

COMPOSITE	UNDISTURBED
1. Permits testing of a more uniform matrix. Useful for running column tests to ascertain if target concentration goals can be met.	1. Required to measure bulk density and calculate porosity.
2. Permits better determination of reproducibility.	2. Air permeability is closer to field conditions. Access to air flow is still excellent because of the small cross section of the equipment.
3. Does not destroy adsorption/desorption properties.	3. Does not destroy adsorption/desorption properties.
4. Increased air permeability permits better access to air flow and accelerates the SVE process.	
5. Lose greater amounts of the more volatile components.	

cleanup targets for those compounds that have marginal volatility in the matrix tested, loss of some of the more volatile contaminants and changes in soil structure are not critical.

The natural structure of the soil will also be destroyed by compositing. Column tests may also be used for estimating air permeability and measurements of the soil bulk density for calculating the air-filled porosity at field conditions. Composite samples are not recommended for such studies. “Undisturbed” or intact samples must be used for these purposes. Table 4-2 shows the testing applications and considerations for composite and “undisturbed” samples.

Samples should be collected from the zone of maximum contaminant concentrations. They should also be collected from areas of the site that have different types of VOCs or semivolatiles. For these purposes, a sufficient number of split spoon samples should be taken from each area of concern to provide enough material for five column tests and for analytical testing for the contaminants of interest. The soil from the split spoons should be mixed and composited and placed in large glass containers with teflon-lined lids. The containers should be sealed and cooled to 4EC. All samples should be recorded in a permanent logbook. Sample containers should be shipped using chain-of-custody procedures. Also, Shelby tube samples should be taken for moisture, density, and porosity measurements of each contaminated soil type or geological structure. Shelby tubes can be used for undisturbed samples.

Onsite air permeability tests should obtain the air permeability of each geological formation identified during the site characterization. The tests should be performed in areas of high contaminant concentrations and in areas of lower contamination where contaminant compounds with different properties (volatility, solubility) have been found. A sampling grid should be established for these tests. Advice from experts should be sought for establishing the sampling grid. The dimensions of each sampling zone are site specific. Complex sites require more sampling points.

4.4.2 Contaminated Soil Analysis

The contaminated matrix analysis characterizes the physical and chemical properties of the contaminants and the soil in which they reside. Analyses conducted during the site investigation were discussed in Section 2.2.2. Analyses recommended during the treatability study are discussed below.

Analysis of the composited soil samples should be made prior to and after the column tests. The analysis should cover only those contaminants that are of interest for the treatability tests (e.g., contaminants that may be difficult to remove by the SVE technology and contaminants occurring at high concentrations). The effluent gas should be analyzed during the tests for a few of the above “indicator” contaminants. Several analytical methods for the column tests are listed in Table 2-2. When combined with the airflow rates, the initial contaminant removal rates can be estimated for full-scale SVE.

During the air permeability and pilot-scale tests, the effluent concentration in the soil gas should be measured. Use of an instrument that directly measures total organic concentrations (e.g., a portable GC/FID) is preferable. Alternatively, samples may be collected in gas collection bombs, sorbent tubes, or other suitable sample collection devices, and analyzed using the applicable methods.

4.4.3 Process Control Measurements

Process control and monitoring measurements are essential for air permeability test column tests, and field vent tests. The most important variables are vacuum measurements and vapor flow rates. Ambient air temperatures and soil temperatures should be measured during the air permeability and field venting tests. Water-removal rates and water table level should be measured during the field venting tests.

4.4.4 Residuals Sampling and Analysis

The normal residuals from SVE are effluent gas from extraction wells, contaminated water removed in the air/water separator and, in many cases, spent activated carbon from the treatment of the effluent gas and water. Residual contaminants may be in the soil. Analysis of the effluent gas was discussed in section 4.4.2. A representative sample of the contaminated water should be collected after the pilot-scale tests are completed. The sample should be analyzed for the “indicator” contaminants to supplement contaminant removal data. It should also be analyzed for the entire list of site contaminants given in Table 2-1 to determine disposal requirements.

4.5 DATA ANALYSIS AND INTERPRETATION

The Work Plan should describe the data reduction procedures to be used. Upon completion of each tier of SVE treatability tests, the data must be summarized, interpreted,

and evaluated to assess SVE performance and the advisability of proceeding to the next tier. Data reduction is discussed below; data interpretation is discussed in Section 6.

4.5.1 Data Reduction

The raw data will be obtained in the form of charts and data logs. These data should be reduced to summary figures and tables to facilitate interpretation and evaluation.

Tabulated data from column tests will include analytical, test variable, and soil characteristic data as follows:

Analytical data for each indicator compound
- concentration in the offgas for the length of the run
- the initial and final concentration in the headspace, in the TCLP leachate from the column, and in the column soil
- moisture content

Test variable data
- pressure levels
- temperature levels
- air-flow rates

Soil properties
- soil porosity
- bulk density and true specific gravity

Plots of the soil gas concentration and the number of air pore-volume changes as a function of time should be presented. Figure 4-4 illustrates the suggested format for presenting effluent gas concentrations.[12] After the data are reduced, the final contaminant concentrations should be compared to the target level concentrations. The partition functions for mathematical modeling are obtained by calculating the contaminant mass removed in the column as a function of time and changing the partition function until the predictions of the mathematical model match the column data.

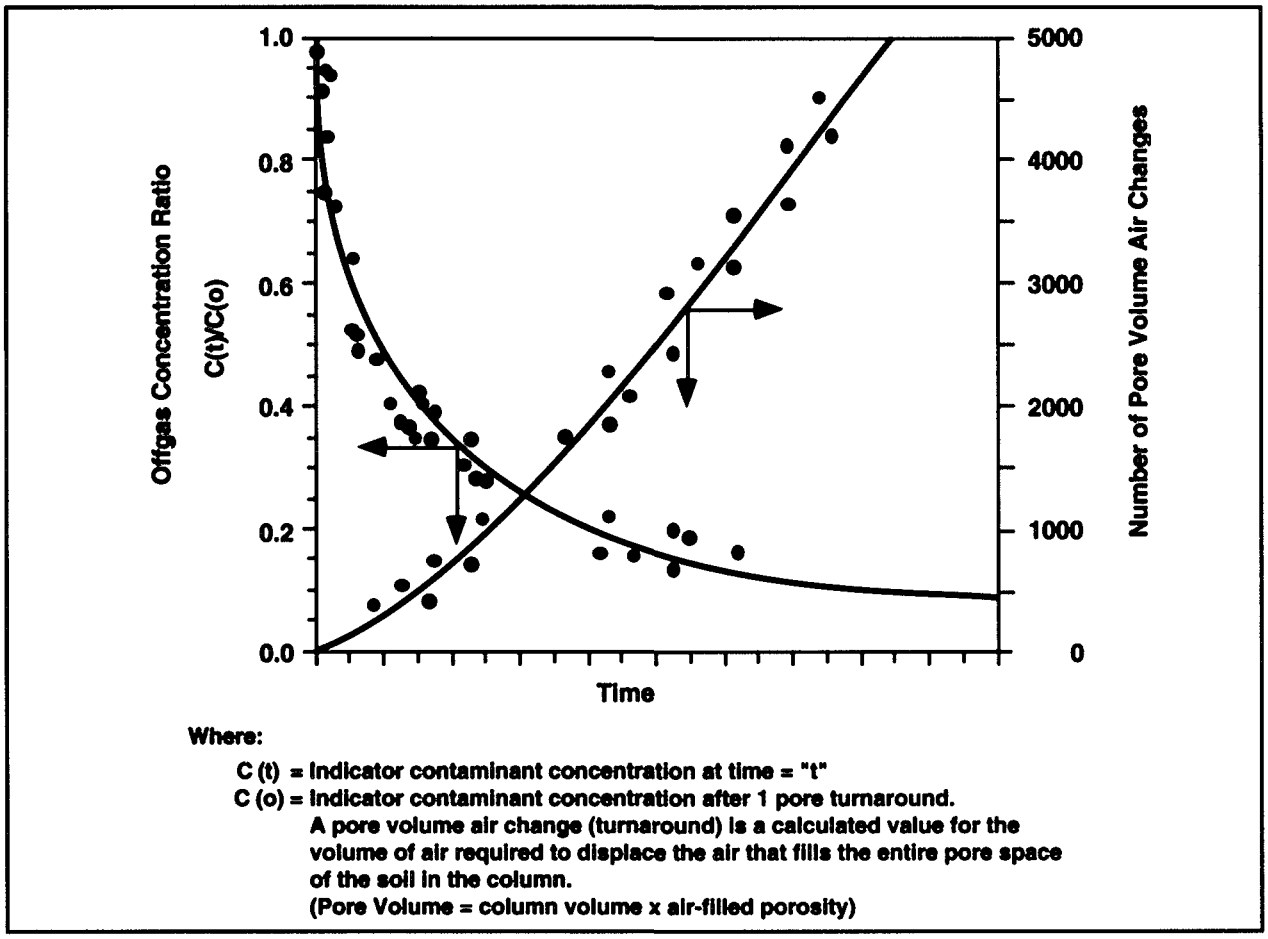

Figure 4-4. Hypothetical column test data.

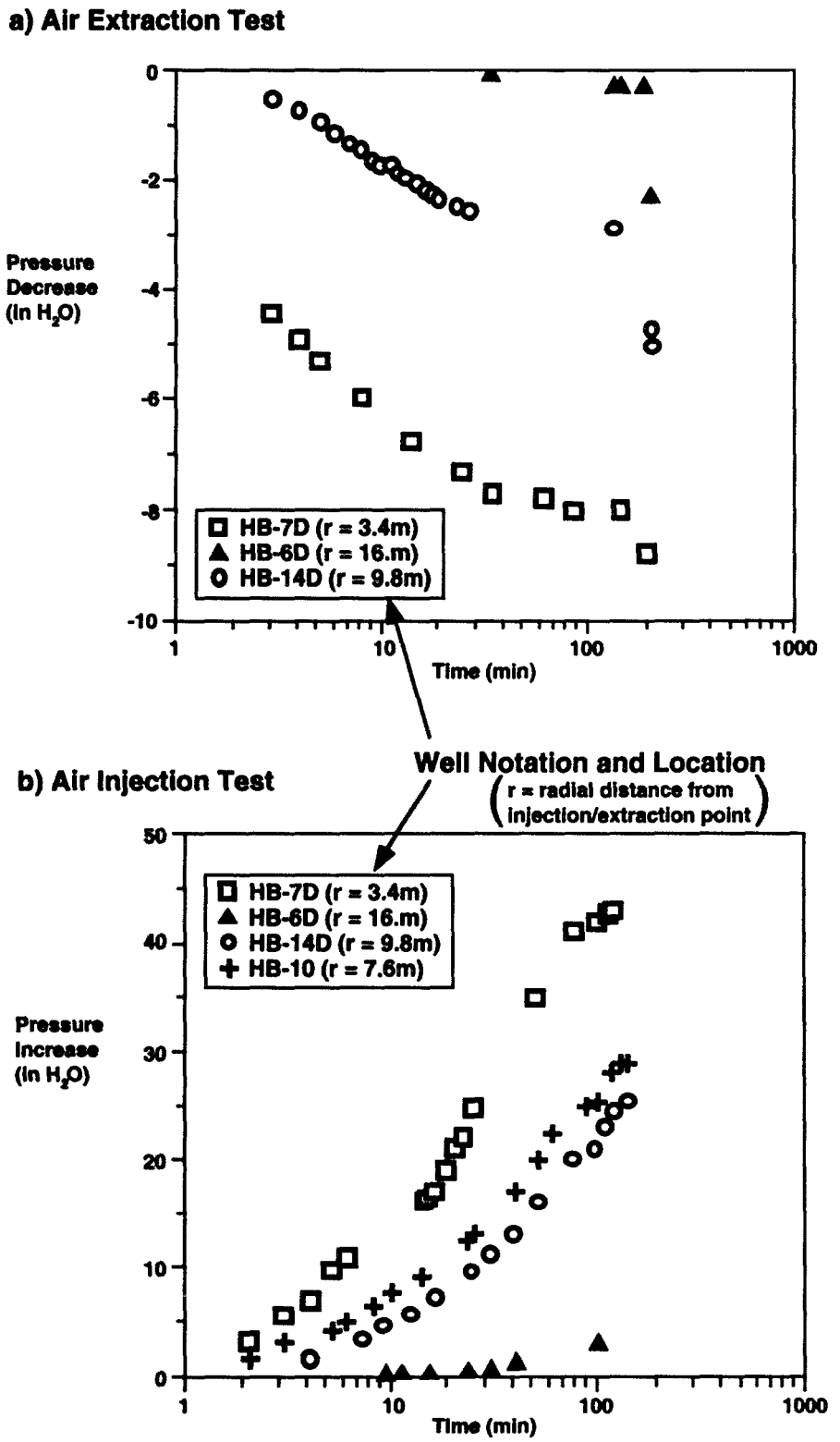

Note: Inches of water (in. H_2O) denote vacuums expressed as equivalent water column heights. The ordinate is the difference between the pressure/vacuum at time (t) and the initial pressure/vacuum.

Figure 4-5. Typical field air permeability test data.

Tabulated data from air permeability tests will include the following: vacuum applied, air-flow rate, pressure distribution, and total contaminant concentrations in the offgas. The location of the extraction point should be given. If a well is used, the well design data (e.g., depth, length of screened section, diameter of coarse sand or gravel packing) are also needed. Pressure changes are plotted as a function of time. Figure 4-5 illustrates the suggested format for displaying field air permeability results.[12] The soil permeability to air flow may be calculated from the slope and intercept of the data obtained from plots similar to Figure 4-5[12] as follows:

$$k = \frac{10^{-8} r^2 e u}{4P_{Atm}} \exp\left(\frac{B}{A} + 0.5772\right)$$

WHERE:

k = air permeability (cm^2)
r = radial distance from extraction well (m)
e = air-filled soil porosity (void fraction)
u = viscosity of air (1.8×10^{-4} g/cm-s)
P = ambient atmospheric pressure (1 atm = 1.013×10^6 g/cm-s^2)
B = y-intercept (g/cm-s) (see Figure 4-5)
A = slope (g/cm-s^2) (see Figure 4-5)

After the data are reduced, the calculated air permeabilities should be compared to the criteria for adequate permeability in Figure 6-1. If the air permeabilities are less than 10^{-10} cm^2, SVE may not be feasible. If the air permeabilities are greater than 10^{-6} cm^2, then the site has adequate air permeability.

If the air permeabilities are intermediate, mathematical modeling should be performed to give a cleanup time estimate.

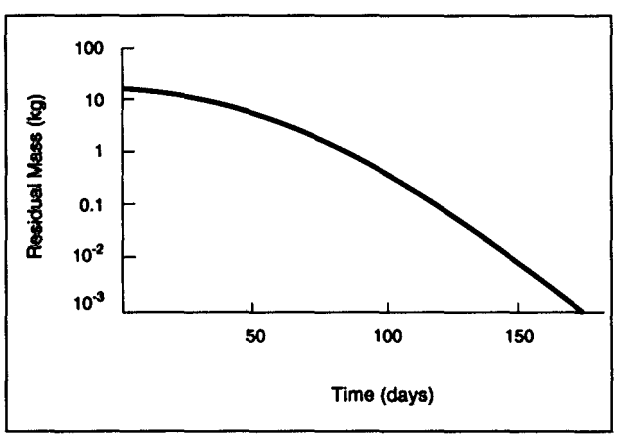

Figure 4-6. Typical mathematical modeling results.

Output from mathematical modeling will list the predicted concentration of the indicator contaminant remaining in soil as a function of cleanup time. SVE modeling variables that affect this prediction, including variations in permeability, vacuum applied, radius of influence of the extraction well, and partition functions, will also be tabulated. A plot of predicted residual mass as a function of operation time is the suggested method for presenting the data (Figure 4-6).

Tabulated data from pilot-scale tests will include applied vacuum, air-flow rates, offgas moisture levels, amount of moisture removed, soil pressures, and effluent contaminant concentrations. Cumulative contaminant mass removed should be calculated or measured. Variables that determine efficiency of the treatment technologies for the effluent gas and water (e.g., carbon loading factor) should also be tabulated. Operating conditions of any auxiliary equipment should be listed. Plots of contaminant removal rates, flow rates, and applied vacuums as functions of time are acceptable methods of presenting pilot-scale data. Figure 4-7 shows examples of these plots.[12(32)(34)] After the data are reduced, the results should be compared with the predictions of mathematical modeling. If the modeling predictions and pilot-scale test results differ significantly, the data should be reconciled, and the model assumptions should be checked for validity. The modeling should be repeated using the parameters obtained from the pilot-scale test. The estimated cleanup time predictions from the revised modeling should be compared to the site cleanup goals. Engineering modifications to the pilot-scale unit should be pursued before abandoning the technology. Modeling can be helpful in identifying potential modifications.

4.5.2 Assessment of Data Quality

A secondary goal of data analysis is to determine the quality of the data collected. Field data should be checked for adequate instrument calibrations. All data should be checked to assess precision (relative percent difference for duplicate matrix spikes), accuracy (percent recovery of matrix spikes), and completeness (percentage of data that are valid). If the QA objectives specified in the QAPjP have not been met, the RPM and the EPA management must determine the appropriate corrective action. The data that must be obtained for each tier are discussed in Sections 2, 3, and 4.2.

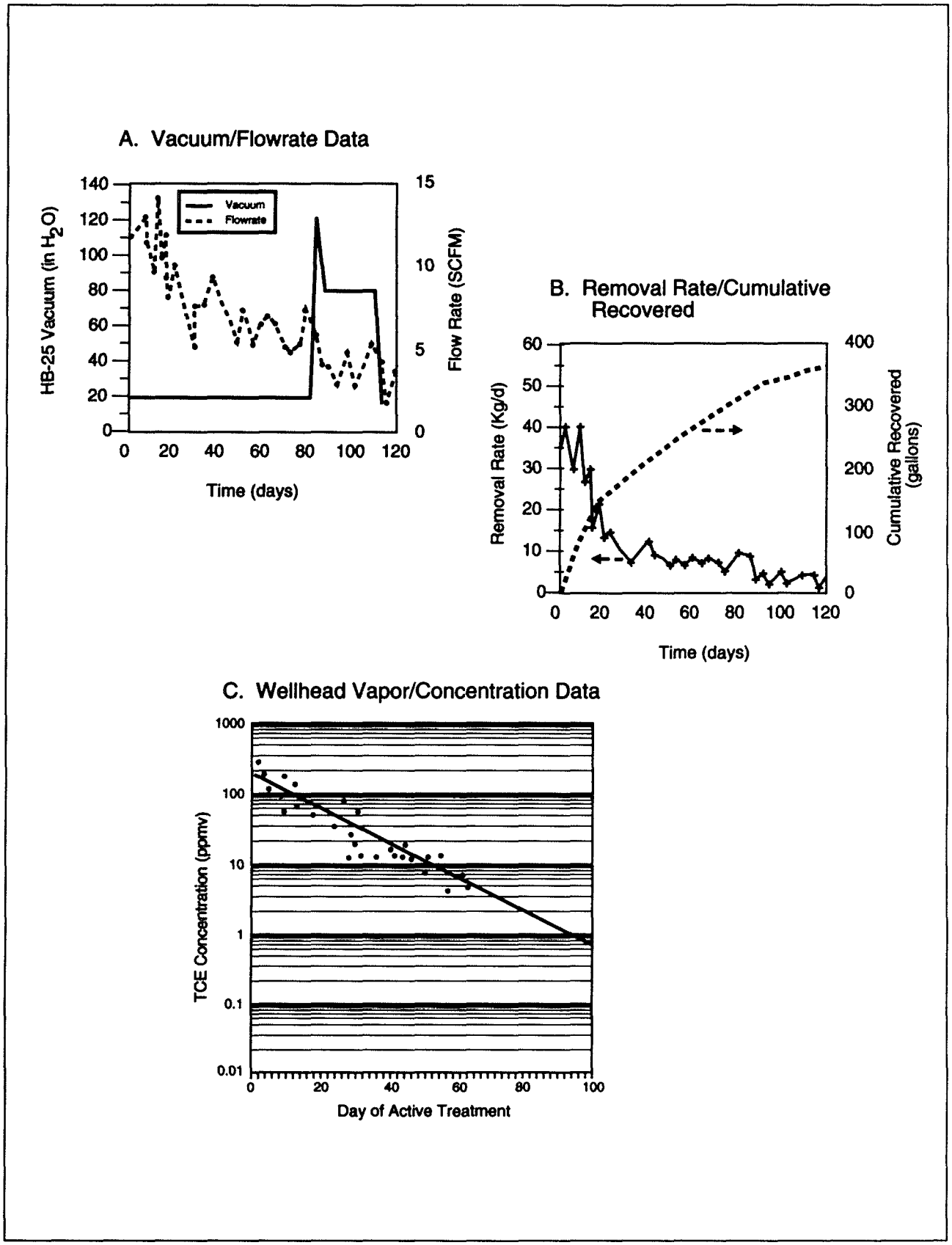

Figure 4-7. Typical field vent test data.

4.6 REPORTS

The Work Plan should discuss the organization and content of interim and final reports. Once the data have been gathered, interpreted, and analyzed, they must be incorporated into a report. Section 4.12 of the generic guide[24] provides the suggested organization for the treatability study report and a generic discussion of the report's contents.

If the SVE technology is to be tested in multiple tiers, a formal report for each tier of the testing is not required. Interim reports and project briefings should be prepared at the completion of each tier for the interested parties to present the study findings and to determine the need for additional testing. A final treatability study report that encompasses the results of the entire study should be developed after testing is complete.

4.6.1 General Results Reported

For each tier of testing, all data collected should be presented and discussed. Raw data and charts should be included in appendices. In general, significant results from the remedy selection tests should be presented in the formats of Figures 4-4, 4-5, and 4-6 for column tests, field air permeability tests, and mathematical modeling, respectively.

The pilot-scale field vent tests that precede full-scale remediation will provide actual field-log remediation data (associated with equipment and system operations) and effluent contaminant concentrations. These data will include vacuum levels, vapor-flow rates, and vapor-contaminant concentrations versus operating time. Typical field vent test data should be formatted like the plots in Figure 4-7.

4.6.2 Mathematical Modeling

A mathematical modeling report should include:

- A physical-chemical description of the model
- The rationale for input parameter selection
- Plots of log 10 residual contaminant mass versus time for each run (See Figure 4-6.)
- Times required to achieve specified cleanup levels (such as 90 percent, 99.9 percent, etc.)
- Tables showing the sensitivity to key variables (e.g., air permeability, partition functions, radius of influence, etc.)
- Representative contaminant distributions as cleanup progresses (optional)

The report may also address randomly generated permeability functions and diffusion/desorption kinetics.

4.6.3 Treatability Data Base

As an aid in the remedy selection and the planning of future treatability studies, the Office of Emergency and Remedial Response requires that the contractor send a copy of all treatability study reports to the Agency's Superfund Treatability Data Base repository. The Work Assignment must stipulate this requirement. This data base is being developed by the Office of Research and Development. A copy must be sent to:

Mr. Glenn Shaul
Superfund Treatability Data Base
U.S. Environmental Protection Agency
Office of Research and Development
Risk Reduction Engineering Laboratory
26 W. Martin Luther King Drive
Cincinnati, Ohio 45268

4.7 SCHEDULE

The Work Plan should discuss the schedule for completing the treatability studies. The schedule lists the anticipated starting and ending dates for each task described in the Work Plan. It also shows how the various tasks interface. The time span for each task should take additional factors into account: the time span required to prepare the Work Plan, to hire subcontractors, and to obtain other formal approvals (e.g., disposal approval from a commercial treatment, storage, or disposal facility (TSDF)); the duration of test operations; the analytical turnaround time; and the review and comment periods for reports and other project deliverables. Some slack time should be built into the schedule to accommodate unexpected delays (e.g., bad weather, equipment downtime) without delaying the project completion date.

The schedule is usually displayed in the form of a bar chart. If the study involves multiple tiers of testing, all tiers should be shown on one schedule. Careful pretest planning is essential. Depending on the length of the review and approval process, planning can take several months. Figure 4-8 presents a modified bar chart that

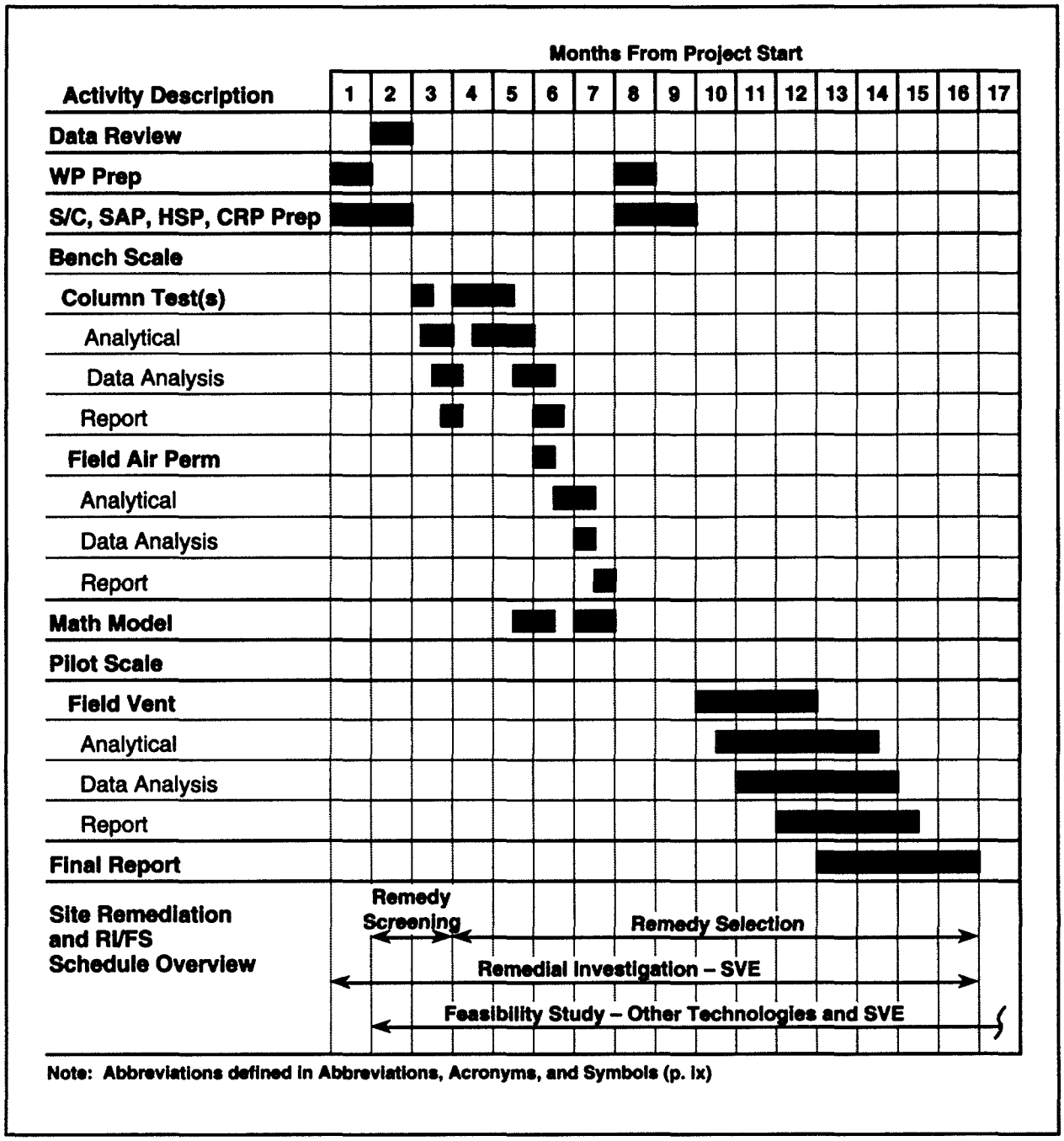

Figure 4-8. Example project schedule for a full-tier SVE treatability study program.

identifies the key activities associated with the multiple tiers of SVE technology evaluation and treatability testing. Estimates are shown for each activity's time span. It may take a year to complete the treatability testing and results reporting.

4.8 MANAGEMENT AND STAFFING

The Work Plan should discuss the management and staffing for treatability studies. The Work Plan identifies key management and technical personnel and defines specific project roles and responsibilities. The line of authority is usually presented in an organization chart, as in Figure 4-9. The RPM oversees the project, including the establishment of

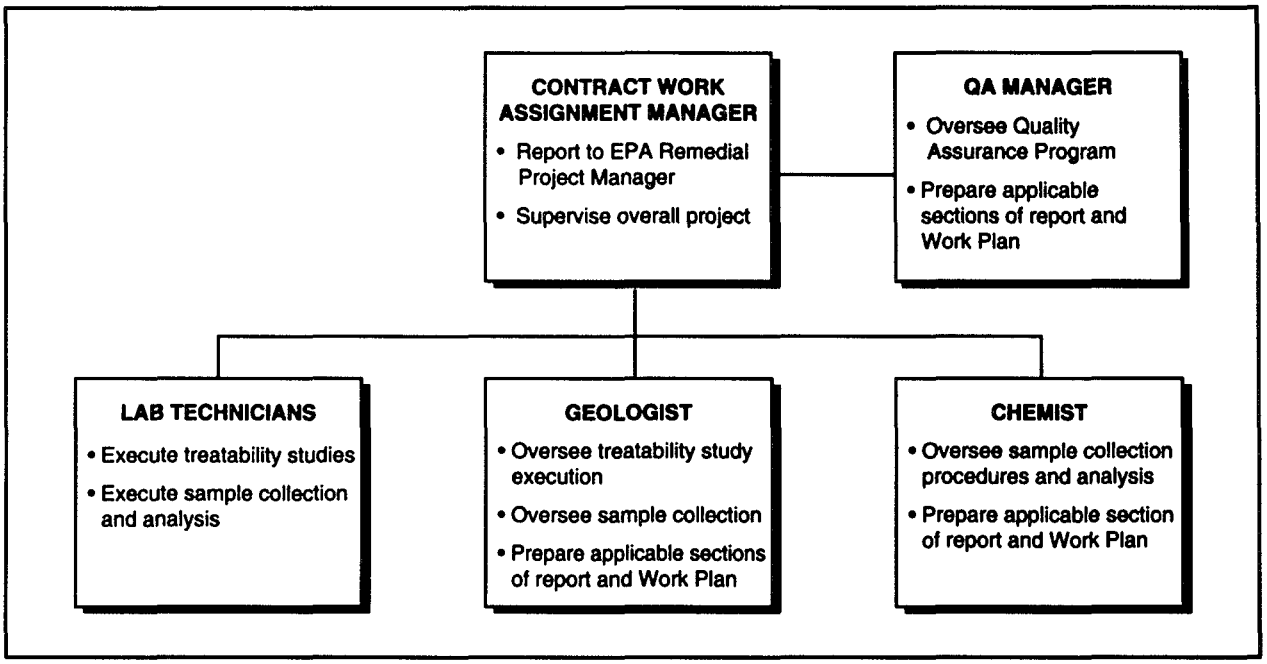

Figure 4-9. Example organization chart.

data quality objectives, selection of vendors and subcontractors, the implementation of contracts, and issuance of the Work Assignment. At Federal- and State-lead sites, the remedial contractor directs the treatability study. This contractor oversees the execution of the tasks shown in Figure 4-8. At private-lead sites, the PRP performs this function and bears responsibility for the contracting mechanism and the Work Assignment. The RPM may subcontract the treatability study in whole or in part to a vendor, laboratory, or testing facility with expertise in the subject technology.

Once the decision to conduct a treatability study has been made and its scope defined, the RPM must engage a contractor or vendor with the requisite technical capabilities and experience. In support of the Superfund Program, ORD has compiled a list of treatability study vendors and contractors entitled: "Inventory of Treatability Study Vendors," EPA/540/2-90/003a.[26]

In general, there are three methods of obtaining treatability study services. Remedial Engineering Management (REM) and Alternative Remedial Contractors Strategy (ARCS) contracts obtain management and technical services in support of remedial response activities at CERCLA sites. A specific waste may require specialized expertise that is not available from firms accessible through existing REM or ARCS contracts. The RPM may then need to investigate firms that have this unique capability and implement other contracting mechanisms, such as a Request for Proposal (RFP).

4.9 BUDGET

The Work Plan should discuss the budget for conducting treatability tests. Figure 4-10 illustrates the major cost elements associated with each tier.

Analytical costs significantly impact project costs during all treatability testing tiers. Data analysis and quality assurance activities can represent 50 percent or more of the total test cost. Several factors affect the expense of an analytical program, including: the laboratory performing the analyses, the analytical target list, the number of samples, the required turnaround time, QA/QC level, and reporting requirements. Analytical costs vary substantially from laboratory to laboratory. However, before prices are compared, the subject laboratories should be properly investigated. What methods will be used for sample preparation and analysis? What detection limits are needed? Does each laboratory fully understand the matrix that will be received (e.g., sludge, oily soil, slag)? Are they aware of interfering compounds that may be in the sample (e.g., sulfide)? If all laboratories are using the same methods and equipment, and understand the objectives of the analytical program, their charges can be validly compared.

The number and the types of analytes can also affect analytical costs. Analysis of a few "indicator" contaminants may greatly reduce costs compared to analyzing for

Cost Element	Field Air Permeability Test	Bench-Scale Column Test(s)	Computer Model	Pilot-Scale Field Test
WP, S/C, SAP, HSP Preparation	○	○	▲	○
Mobilization/Demobilization	○	○	▲	●
SVE Vendor Equipment	▲	▲	○	●
Materials	○	○	▲	●
Utilities	○	○	▲	●
Sampling, Monitoring	○	○	▲	●
Analytical	○	○	▲	●
Residuals Management	○	○	▲	●
Data Analysis, Report Preparation	○	○	○	○
Estimated total cost	$10,000 - $50,000	$30,000 - $70,000	$10,000 - $20,000	$100,000+

▲	Not Applicable and/or No Cost Incurred:	$0
○	May Be Applicable and/or Moderate Cost Incurred:	$1,000 - $10,000
●	Applicable and/or High Cost Incurred:	>$10,000

Figure 4-10. General applicability of cost elements to SVE remedy selection tests.

all contaminants. Also, analyses of some analytes cost more than others. Often, there are analytes that provide information, but are not critical to the study. The selection of analytes for analysis could be more cost effective if the parameter-specific costs were known.

The number of samples, turnaround time, QA/QC procedures, and reporting requirements also affect analytical costs. Often, laboratories discount on sample quantities greater than 5, greater than 10, and greater than 20 when the samples arrive at the same time. They also apply premiums of 25, 50, 100, and 200 percent when analytical results are requested in a faster turnaround time, less than 15 to 25 working days. If matrix spike and matrix spike duplicates are required, the analytical cost will increase due to those QA/QC samples.

Section 2 discusses typical analytical tests for an SVE treatability study program. Vendor equipment is a key cost element in pilot-scale testing. Vendors often provide operators, personal protective equipment, chemicals, and decontamination supplies during pilot-scale tests. Treatment system capital costs may range from $50,000 for transportable units to extensive site-installed facilities costing $500,000. Operation, maintenance, and monitoring may cost $10,000 to $100,000 per month of operation. Pilot-scale tests may total $20 to $80 per ton of treated soils. The pilot-scale equipment can be used as part of a full-scale remedial installation to significantly reduce overall costs. Vendor equipment is usually full-scale capacity. The actual remedial action may require only the addition of extraction wells.

Residuals management costs may include offgas treatment and wastewater disposal costs (depending on local, State and Federal regulations). These can range from$ 10 to $30 per ton of treated soil. Site-specific criteria will affect actual costs.

SECTION 5
SAMPLING AND ANALYSIS PLAN

The Sampling and Analysis Plan (SAP) consists of two parts—the Field Sampling Plan (FSP) and the Quality Assurance Project Plan (QAPjP). The purpose of this section is to identify the contents of and aid in the preparation of these plans. The RI/FS requires a SAP for all field activities. The SAP ensures that samples obtained for characterization and testing are representative, and that the quality of the analytical data generated is known and appropriate. The SAP addresses field sampling, waste characterization, and sampling and analysis of the treated wastes and residuals from the testing apparatus or treatment unit. The SAP is usually prepared after Work Plan approval.

5.1 FIELD SAMPLING PLAN

The FSP component of the SAP describes the sampling objectives; the type, location, and number of samples to be collected; the sample numbering system; the equipment and procedures for collecting the samples; the sample chain-of-custody procedures; and the required packaging, labeling, and shipping procedures.

Field samples are taken to provide baseline contaminant concentrations and soil for treatability studies. The sampling objectives must be consistent with the treatability test objectives.

The primary objective of remedy selection treatability studies is to evaluate the extent to which specific chemicals are removed from the soil. The primary sampling objectives include:

- Acquisition of samples representative of conditions typical of the entire site or defined areas within the site. Because a mass balance is required for this evaluation, statistically designed field sampling plans may be required. However, professional judgment regarding the sampling locations may be exercised to select sampling sites that are typical of the area (pit, lagoon, etc.) or appear above the average concentration of contaminants in the area being considered for the treatability test. This may be difficult because reliable site characterization data may not be available early in the remedial investigation.

- Acquisition of sufficient sample volume necessary for testing, analysis, and quality assurance and quality control.

From these two primary objectives, more specific objectives/goals are developed. When developing the more detailed objectives, consider the following types of questions:

- How many samples should be composited to provide better reproducibility for the treatability test? This question, including the type of compositing, is addressed in section 4.4.1.

- Are there adequate data to determine sampling locations indicative of the more contaminated areas of the site? Have soil gas surveys been conducted? Contaminants may be widespread or isolated in small areas (hot spots). Contaminants may be mixed with other contaminants in one location and appear alone in others. Concentration profiles may vary significantly with depth.

- Are the soils homogeneous or heterogeneous? Soil types can vary across a site and with depth. Depending on professional judgment, contaminated samples from various soil types may have to be taken to conduct treatability tests. Changes in soil composition can affect the effectiveness of SVE.

- Is sampling of a “worst-case” scenario warranted? Assessment of this question must be made on a site-by-site basis. Hot spots and areas with soils which may be difficult to treat should be factored into the test plan if they represent a significant portion of the waste site. Thick lenses of clay may be especially difficult to treat with SVE.

After identifying the sampling objectives, an appropriate sampling strategy is described. Specific items that should be briefly discussed in the FSP are listed in Table 5- 1.

Table 5-1. Suggested Organization of Sampling and Analysis Plan

Field Sampling Plan

1. Site Background
2. Sampling Objectives
3. Sample Location and Frequency
   – Selection
   – Media Type
   – Sampling Strategy
   – Location Map
4. Sample Designation
   – Recording Procedures
5. Sample Equipment and Procedures
   – Equipment
   – Calibration
   – Sampling Procedures
6. Sample Handling and Analysis
   – Preservation and Holding Times
   – Chain-of-Custody
   – Transportation

Quality Assurance Project Plan

1. Project Description
   – Test Goals
   – Critical Variables
   – Test Matrix
2. Project Organization and Responsibilities
3. QA Objectives
   – Precision, Accuracy, Completeness
   – Representativeness and Comparability
   – Method Detection Limits
4. Sampling Procedures
5. Sample Custody
6. Calibration Procedures and Frequency
7. Analytical Procedures
8. Data Reduction, Validation, and Reporting
9. Internal QC Checks
10. Performance and System Audits
11. Preventive Maintenance
12. Calculation of Data Quality Indicators
13. Corrective Action
14. QC Reports to Management
15. References
16. Other Items

5.2 QUALITY ASSURANCE PROJECT PLAN

The QAPjP consists of sixteen sections. Since many of these sections are generic and applicable to any QAPjP and are covered in available documents.[23][24] this guide will discuss only those aspects of the QAPjP that are affected by the treatability testing of SVE technology.

5.2.1 Project Description

Section 1 of the QAPjP must include an experimental project description that clearly defines the experimental design, the experimental sequence of events, each type of critical measurement to be made, each type of matrix (experimental setup) to be sampled, and each type of system to be monitored. This section may reference Section 4 of the Work Plan. All details of the experimental design not finalized in the Work Plan should be defined in this section.

Items to be included, but not limited to, are:

- Number of samples (areas) to be studied
- Identification of treatment conditions (variables) to be studied for each sample
- Target compounds for each sample
- Number of replicates per treatment condition
- Criteria for technology retention or rejection for each type of remedy selection test.

The project description clearly defines and distinguishes the critical measurements from other observations made and system conditions (e.g., process controls, operating parameters, etc.) routinely monitored. Critical measurements are those measurements, data gathering, or data generating activities that directly impact the technical objectives of a project. At a minimum, the determination of the target compounds (identified above) in the initial and treated soil samples will be critical measurements for column tests. Air permeability measurement and radius of influence will be critical for air permeability tests. Airflow rates, concentration of target compounds, radius of influence, and vacuum applied will be critical measurements for pilot-scale tests.

5.2.2 Quality Assurance Objectives

Section 3 lists the QA objectives for each critical measurement and sample matrix defined in Section 1. These objectives are presented in terms of the six data quality indicators: precision, accuracy, completeness, representativeness, comparability, and, where applicable, method detection limit.

5.2.3 Sampling Procedures

The procedures used to obtain field samples for the treatability study are described in the FSP. They need not be repeated in this section, but should be incorporated by reference.

Section 4 of the QAPjP contains a description of a credible plan for subsampling the material delivered to the laboratory for the treatability study. The methods for allocating the material for determination of chemical and physical characteristics such as bulk density, true specific gravity, moisture content, contaminant concentrations, etc., must be described.

5.2.4 Analytical Procedures and Calibration

Sections 5, 6, and 7 describe or reference appropriate analytical methods and standard operating procedures for the analytical method for each critical measurement made. In addition, the calibration procedures and frequency of calibration are discussed or referenced for each analytical system, instrument, device, or technique for each critical measurement. The procedures presented in Appendices A, B, and C list some of the calibrations that should be performed for SVE remedy selection tests.

The methods for analyzing the treatability study samples are the same as those for chemical characterization of field samples. Table 2-1 presents suitable analytical methods. Preference is given to methods in "Test Methods for Evaluating Solid Waste, SW-846, 3rd. Ed., November 1986.[35] Other standard methods may be used, as appropriate.[1][2] Methods other than gas chromatography/mass spectrometry (GC/MS) techniques are recommended to conserve costs when possible.

5.2.5 Data Reduction, Validation, and Reporting

Section 8 includes, for each critical measurement and each sample matrix, a specific presentation of the requirements for data reduction, validation, and reporting. Aspects of these requirements are covered in Sections 4.5, 4.6, and 6.1 of this guide.

5.2.6 Quality Control Reports

Section 14 describes the QA/QC information that will be included in the final project report. As a minimum, reports include:

- Changes to the QA Project Plan
- Limitations or constraints on the applicability of the data
- The status of QA/QC programs, accomplishments, and corrective actions
- Results of technical systems and performance evaluation QC audits
- Assessments of data quality in terms of precision, accuracy, completeness, method detection limit, representativeness, and comparability.

The final report contains all the QA/QC information to support the credibility of the data and the validity of the conclusions. This information may be presented in an appendix to the report. Additional information on data quality objectives[21] and preparation of QAPjPs[25] is available in EPA guidance documents.

SECTION 6
TREATABILITY DATA INTERPRETATION FOR TECHNOLOGY SELECTION

6.1 TECHNICAL EVALUATION

To properly evaluate SVE as a remediation alternative, the data collected during remedy screening and remedy selection phases must be compared to the test objectives and other criteria that were established before the tests were conducted. Figure 6-1 is a flowchart for evaluating SVE as a potential remedy. It presents a framework of the decision-making process that is based on the comparison between the treatability test objectives and test results. It also includes considerations of contaminant volatility, ability to get air flow to the contaminant, and predicted cleanup times. The flowchart discussed below presents a recommended approach and may be modified based on site-specific conditions. Consultation with experts is recommended.

6.1.1 Remedy Screening Phase

The most important data for decision making during remedy screening are the vapor pressures of the contaminants of concern at the measured soil temperature. Based upon the literature, SVE is not generally feasible for contaminants that have a vapor pressure of less than or equal to 0.5 mm Hg. If the vapor pressure exceeds 0.5 mm Hg, column tests should be executed. If the column test shows 80 percent or more reduction in the soil gas concentration of the contaminant of interest, column tests for remedy selection should be carried out. If the remedy screening tests show that the concentration of the contaminant of interest is below any set target level, field air permeability tests should be conducted for soils with estimated air permeabilities less than or equal to 10^{-6} cm^2. If the vapor pressure of the contaminant equals or exceeds 10 mm Hg, column testing is not required due to the high volatility. However, air permeability tests may be required.

The soil characteristics are also important because these determine the air permeability. If the soil is sandy and the vapor pressure of the contaminant of concern is equal to or above 10 mm Hg, there is historical evidence that SVE is applicable and remedy selection treatability testing may be skipped.

6.1.2. Remedy Selection Phase

The data considered in the work sheet for the remedy selection phase of testing consist of air permeability data, the column test results (for screening and end-point determination), cleanup time predictions based upon mathematical modeling and pilot-scale tests, if necessary.

The column tests require that target concentration levels be set in advance for the contaminants of concern. If after completion of the test, these concentrations exceed the target levels, SVE should be considered infeasible. If the column test shows that the contaminants of concern can be reduced to below the target level, and all other criteria are met, the air permeability tests should be executed. These may be skipped if the estimated air permeabilities are greater than or equal to 10^{-6} cm^2. If the air permeability test results are also favorable as discussed below, pilot-scale testing for remedy selection is recommended. Pilot-scale tests may also be warranted if mixed results are obtained (i.e., air permeability in some strata is less than 10^{-10} cm^2). Decisions for further testing when mixed results are obtained should be based on expert opinion. Further remedy selection testing is not recommended if air permeability tests indicate that SVE is not likely to succeed.

The permeability data measure the ability to achieve adequate air-flow rates at the site. If the permeability is less than or equal to 10^{-10} cm^2, SVE is not feasible. If the permeability is greater than 10^{-10} cm^2, the pilot-scale remedy selection treatability study should be executed provided that the results of mathematical modeling are encouraging. If the permeability exceeds or equals 10^{-6} cm^2, and the vapor pressure of the contaminant of concern is equal to or greater than 10 mm Hg, SVE should be

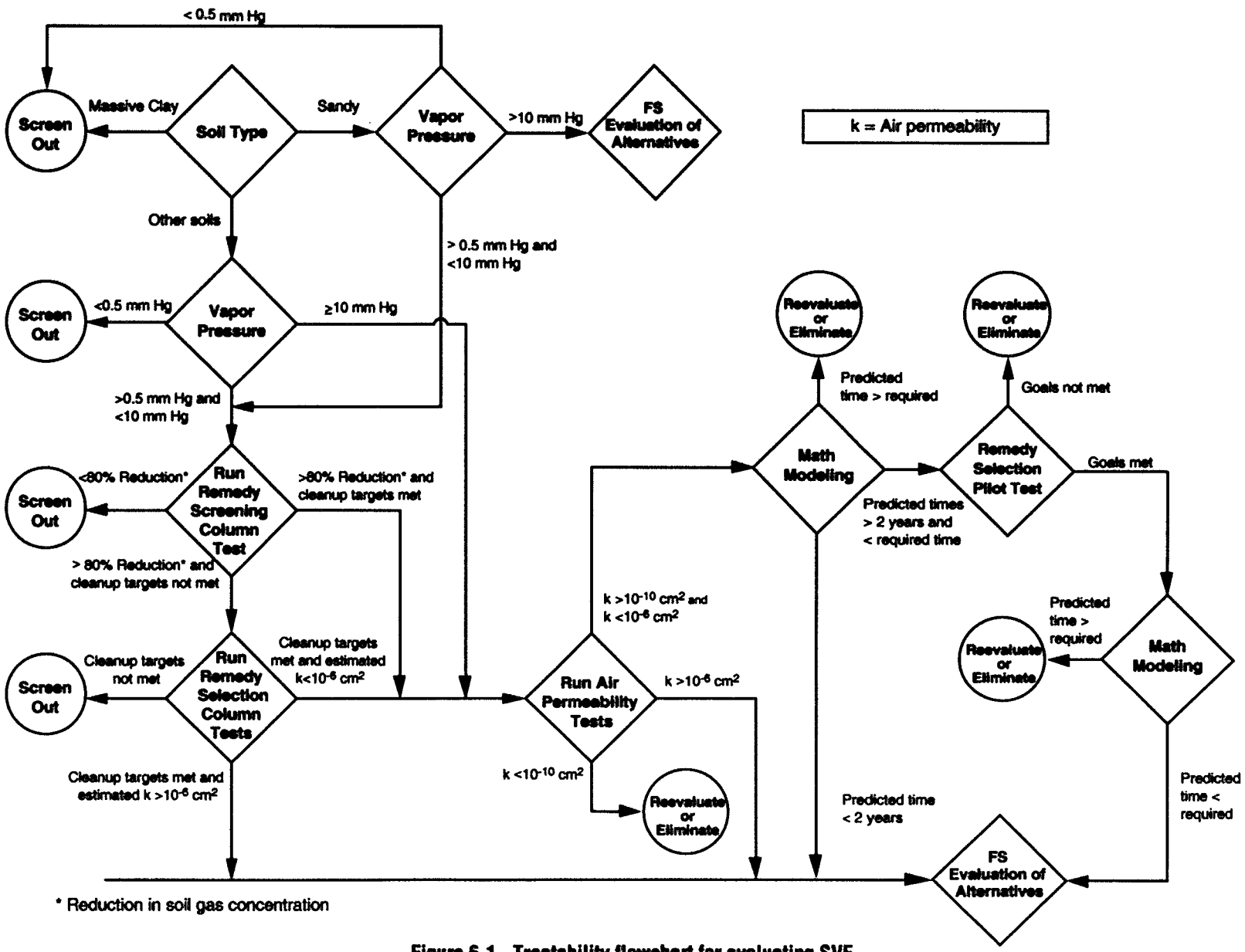

Figure 6-1. Treatability flowchart for evaluating SVE.

considered in the evaluation of alternatives. After selection, remedy design/implementation at the pilot-scale may be required.

Mathematical modeling can be used to predict lower bound (i.e., quickest) cleanup times. If mathematical modeling, based on field measurements of permeability and distribution coefficient data from the column tests, predicts that cleanup to the target level will be greater than the period set by the RPM, SVE should be considered to be infeasible. If mathematical modeling predicts that the cleanup target level can be achieved in less than the period set by the RPM, the pilot-scale treatability tests should be conducted for remedy selection. If mathematical modeling predicts that cleanup to the target level can be achieved in 2 years or less and site characterization data show no great potential for diffusion control, SVE should be considered for remedy design/implementation at the pilot scale.

If the data interpretation provided by Figure 6-1 indicates that SVE should be retained for further evaluation, a pilot test should be run for remedy selection purposes. Based upon the results of the pilot test, the cleanup should be mathematically modeled. During the cleanup, contaminant concentrations in the offgas should be measured periodically, and these should be compared to the predictions from the mathematical model. If after a reasonable period of operation (1 to 2 months), the rate of cleanup is much lower than that predicted by the model, the cause should be investigated. This may be due to short circuiting, improper well placement, unexpected concentration of free NAPL, or unexpected diffusion control. If the problems cannot be resolved, the use of the technology should be reevaluated. If the rate of cleanup is reasonably consistent with the predictions, SVE should be retained for evaluation in the FS.

6.2 COST ESTIMATION FROM DATA

Treatability data for evaluating SVE are very useful in generating cost estimates. These estimates will be most precise when they are based on pilot-scale data. Table 6-1 relates data collected during the treatability studies to the major components affecting the SVE costs. The cost of piping, which is associated with the number and depth of wells, can be significant. Instrumentation and analytical costs for monitoring the process will also affect system costs. Further cost information is presented in Appendix D.

6.2.1 Well Design

The number and depth of wells are major cost considerations. The number of vapor extraction wells is determined by their radius of influence and the extent of contamination. The radius of influence can be determined during air permeability or pilot-scale tests. Sensitivity studies using mathematical models can optimize the installation of wells. The extent of contamination is determined by the site investigation, using soil gas concentrations and soil borings. The depth to the impermeable layer and the location of contaminants determine the depth of the wells. The number of monitoring wells is related to the number of extraction wells.

Site soil characterization, air permeability tests, pilot-scale tests, and mathematical modeling aid in determining whether air injection wells or passive vents are warranted and, if so, in locating them.

6.2.2 Vacuum Pump or Blower

The vacuum pump or blower size is determined by the required air-flowrate and vacuum level. These parameters can be determined from the air permeability or pilot-scale tests results, and the number of extraction wells. If site conditions warrant air injection wells, the required blower size can be determined from the air permeability and pilot-scale test data.

6.2.3 Vapor/Liquid Separator

The vapor/liquid separator size is based upon vapor-flow rates and the moisture content in the offgas. Since moisture infiltration rates may vary considerably and measured rates may underestimate maximum liquid loading, it is advisable to provide excess separator capacity. Also, if carbon is being used to treat the offgas, use of a mist eliminator prior to the carbon beds is recommended to remove the greatest amount of water possible. Use of a mist eliminator should reduce carbon usage significantly.

6.2.4 Surface Seals

The need for surface seals is determined by the air-flow distributions and the potential for surface water infiltration from rainfall or snow. Data from the air permeability or pilot-scale tests, and mathematical modeling of air-flow patterns are useful for determining the need for surface seals to provide adequate subsurface air distribution. Surface water infiltration may be estimated based on rainfall records and the permeability of the surface soils.

Table 6-1. Factors Affecting SVE Treatment Costs

Component Affected	Factors Governing Component Selection	Data Required
Well design	Radius of influence	Pressure profiles from air permeability and pilot tests, mathematical modeling to optimize selection[1]. Contaminant distributions.
Number of wells	Extent of contamination	Depth to bedrock[2], depth to water table.
Depth of wells	Depth to impermeable layer Location of contaminants	Contaminant distributions.
Passive wells (inlet) and air injection wells	Air flow distributions	Air permeability tests, pilot tests, mathematical modeling.
Vacuum pump or blower	Vacuum level and air flow rate	Air permeability tests, pilot tests, number of vapor extraction wells.
Vapor/liquid separator	Liquid (water) removal rates	Moisture content, vapor flowrates (better oversized; mist eliminator recommended).
Surface seals	Air-flow distributions	Air permeability tests, pilot tests, mathematical modeling, or air-flow patterns.
	Surface water infiltration	Rainfall, permeability of surface soils.
Water table depression pumps	Depth to water table Depth of contaminants Water infiltration rates	Depth to water table. Site hydrological behavior.
Offgas treatment	Contaminant removal rates, Contaminant identities, Moisture content after vapor/ liquid separator	Air permeability tests, pilot tests. Moisture content during pilot tests.
Liquid (water) treatment	Site water removal rates treatability factors	Site hydrological behavior, moisture content in offgas, contaminant concentrations in water. Inorganic chemistry tests.
Operating costs	Size of SVE system, cleanup time, analytical costs, and residual disposal costs	All of the above, plus cleanup time predictions based upon mathematical modeling and prior experience.

(1) In general, specify more wells than predicted by mathematical modeling as optimum because of uncertainties in the contaminant location and subsurface conditions.

(2) On some sites, SVE may be the only available technology to apply to fractured bedrock. These wells will be much more costly than wells bored into soil.

6.2.5 Water Table Depression Pumps

The need for water table depression pumps is determined by the depth to the water table relative to the location of the contaminated zone. The pump sizes are determined by the water infiltration rates obtained from the hydrological behavior of the site.

6.2.6 Offgas Treatment

The need for offgas treatment is determined by contaminant type and concentration, results of the health risk assessment for contaminant releases, and local regulations. If offgas treatment is required, its cost is related to the type of treatment, the contaminant removal rates, and the moisture content downstream of the vapor/liquid separator. The contaminant removal rates and moisture content can be determined during the air permeability or pilot-scale tests.

6.2.7 Liquid (Water) Treatment

The need for water treatment is based on the contaminant concentrations in water removed from the subsurface environment. The equipment size is determined by the amount of water and the contaminant type concentrations in the water. The amount of water is a result of the site hydrological behavior and the moisture content in the SVE offgas.

6.2.8 Operating Costs

The operating costs of the SVE system are related to the size of the system, the power requirements, the amount of residues treated, the analytical costs for monitoring the operation, maintenance costs, and the cleanup time required to remediate the site. The approximate cleanup time predictions obtained from mathematical modeling and prior experience can be used to estimate the total operating cost.

6.2.9 Total Cost Estimate

The total cost of SVE includes capital, and operating and maintenance costs. Capital costs may be roughly estimated by determining the system size (using the considerations from the preceding sections) and multiplying unit size estimates by the values given in Appendix D.

SECTION 7
REFERENCES

1. American Society for Testing and Materials. Annual Book of ASTM Standards, 1987.

2. American Society of Agronomy, Inc. Methods of Soil Analysis, Part 2, Chemical and Microbiological Properties. 2nd Ed., 1982.

3. Baehr, A.L., G.E. Hoag, and M.C. Marley. Removing Volatile Contaminants from the Unsaturated Zone by Inducing Advective Air Phase Transport. Journal of Contaminant Hydrology, Vol. 4, 1989.

4. Bennedsen, M.B., J.D. Hartley, and J.P. Scott. Use of Vapor Extraction Systems for In Situ Removal of Volatile Organic Compounds from Soil. Presented at Hazardous Controls Research Institute Conference, 1987.

5. Danko, J. Applicability and Limitations of Soil Vapor Extraction for Sites Contaminated with Volatile Organic Compounds. Presented at the Soil Vapor Extraction Technology Workshop on Soil Vacuum Extraction, U.S. Environmental Protection Agency, Risk Reduction Engineering Laboratory, Edison, New Jersey, June 28-29, 1989.

6. DePaoli, D.W., S.E. Herbes, M.G. Elliot, Capt. USAF. Performance of In Situ Soil Venting System at Jet Fuel Spill Site. Presented at the Soil Vapor Extraction Technology Workshop on Soil Vacuum Extraction, U.S. Environmental Protection Agency, Risk Reduction, Engineering Laboratory, Edison, New Jersey, June 28-29,1989.

7. DiGiulio, D.C., J.S. Cho, R.R. DuPont, and M.W. Kemblowski. Conducting Field Tests for Evaluation of Soil Vacuum Extraction Application. Proceedings of Fourth National Outdoor Action Conference on Aquifer Restoration, Groundwater Monitoring, and Geophysical Methods. NWWA, Las Vegas, Nevada, 1990.

8. Gannon, K., D.J. Wilson, A.N. Clarke, R.D. Mutch, Jr., and J.H. Clarke. Soil Cleanup by In Situ Aeration. II. Effects of Impermeable Caps, Soil Permeability, and Evaporative Cooling. Separation Science and Technology, 24 (11): 831-862, 1989.

9. Hinchee, R.E., D.C. Downey, and E. J. Coleman. Enhanced Bioreclamation Soil Venting and Groundwater Extraction: A Cost-Effectiveness and Feasibility Comparison. Proceedings of Petroleum Hydrocarbons and Organic Chemicals in Groundwater: Prevention, Detection, and Restoration. Houston, Texas, 1987.

10. Hoag, G.E. Soil Vapor Extraction Research Developments. Presented at the Soil Vapor Extraction Technology Workshop on Soil Vacuum Extraction, U.S. Environmental Protection Agency, Risk Reduction Engineering Laboratory, Edison, New Jersey, June 28-29,1989.

11. Hutzler, N.J., J.S. Gierke, and B.E. Murphy. Vaporizing VOCs. Civil Engineering, 60(4): 57-60, 1990.

12. Johnson, P.C., M.W. Kemblowski, J.D. Colthart, D.L. Byers, and C.C. Stanley. A Practical Approach to Design, Operation, and Monitoring of In Situ Soil Venting Systems. Presented at the Soil Vapor Extraction Technology Workshop on Soil Vacuum Extraction, U.S. Environmental Protection Agency, Risk Reduction Engineering Laboratory, Edison, New Jersey, June 28-29, 1989.

13. Marley, M.C., S.D. Richter, B.L. Cliff, and P.E. Nangeroni. Design of Soil Vapor Extraction Systems -A Scientific Approach. Presented at the Soil Vapor Extraction Technology Workshop on Soil Vacuum Extraction. U.S. Environmental Protection Agency, Risk Reduction Engineering Laboratory, Edison, New Jersey, June 28-29, 1989.

14. McCoy & Associates. Hazardous Waste Consultant. 3(2), 1985.

15. Mutch, R.D., and D.J. Wilson. Soil Cleanup by In Situ Aeration. IV. Anisotropic Permeabilites. Separation Science and Technology, 25(1): 1-29, 1990.

16. Oma, K.H., D.J. Wilson, and R.D. Mutch, Jr. In Situ Vapor Stripping: The Importance of Nonequilibrium Effects in Predicting Cleanup Time and Cost. Eckenfelder, Inc., Nashville, Tennessee, 1990.

17. Ostendorf, D.W., and D.H. Kampbell. Biodegradation of Hydrocarbon Vapors in the Unsaturated Zone. Presented at the Workshop on Soil Vacuum Extraction. Robert S. Kerr Environmental Research Laboratory, Ada, Oklahoma, April 27-28, 1989.

18. Payne, F.C., C.P. Cubbage, G.L. Kilmer, and L.H. Fish. In Situ Removal of Purgeable Organic Compounds from Vadose Zone Soils. In: Proceedings of the 41st Purdue University Industrial Waste Conference, West Lafayette, Indiana, pp. 365-369,1986.

19. Trowbridge, B.E. and R.E. Malot. Soil Remediation and Free Product Removal Using In Situ Vacuum Extraction with Catalytic Oxidation. In: Proceedings, 4th National Outdoor Action Conference of Aquifer Restoration, Groundwater Monitoring and Geophysical Methods, Las Vegas, Nevada, May 11-17, p. 559, 1990.

20. U.S. Environmental Protection Agency. Assessing UST Corrective Action Technologies: Site Assessment and Selection of Unsaturated Zone Treatment Technologies. Risk Reduction Engineering Laboratory, Cincinnati, Ohio. EPA/600/2-90/011, 1990.

21. U.S. Environmental Protection Agency. Data Quality Objectives for Remedial Response Activities. OSWER Directive 9355.0-7B. Office of Emergency and Remedial Response and Office of Waste Programs Enforcement, Washington, D.C. EPA/540/G-87/003, 1987.

22. U.S. Environmental Protection Agency. Engineering Bulletin: In Situ Soil Vapor Extraction Treatment. Risk Reduction Engineering Laboratory, Cincinnati, Ohio. EPA/540/2-91/006, 1991.

23. U.S. Environmental Protection Agency. Guidance for Conducting Remedial Investigations and Feasibility Studies Under CERCLA. Office of Emergency and Remedial Response, Washington, D.C. EPA/540/G-89/004, 1988.

24. U.S. Environmental Protection Agency. Guide for Conducting Treatability Studies Under CERCLA, Interim Final. Office of Emergency and Remedial Response, Washington, D.C. EPA/540/2-89/058, 1989.

25. U.S. Environmental Protection Agency. Interim Guidelines and Specifications for Preparing Quality Assurance Project Plans. Office of Monitoring Systems and Quality Assurance, Office of Research and Development, Cincinnati, Ohio. QAMS-005/80, 1980.

26. U.S. Environmental Protection Agency. Inventory of Treatability Study Vendors. EPA Risk Reduction Engineering Laboratory, Cincinnati, Ohio. EPA/540/2-90/003a, 1990.

27. U.S. Environmental Protection Agency. Recovery of Landfill Gas at Mountain View. Engineering Site Study. Solid Waste Management Office, Cincinnati, Ohio. EPA/530/SW-587d or NTIS PB-267 373, 1977.

28. U.S. Environmental Protection Agency. ROD Annual Report: FY 1989. Office of Emergency and Remedial Response, Washington, D.C. EPA/540/8-90/006, 1990.

29. U.S. Environmental Protection Agency. Soil Vapor Extraction Technology: Reference Handbook. Risk Reduction Engineering Laboratory, Cincinnati, Ohio. EPA/540/2-91/003, 1991.

30. U.S. Environmental Protection Agency. Soil Vapor Extraction VOC Control Technology Assessment. Office of Air Quality Planning and Standards, Research Triangle Park, North Carolina. EPA/450/4-89-017, 1989.

31. U.S. Environmental Protection Agency. State of Technology Review: Soil Vapor Extraction System Technology. Hazardous Waste Engineering Research Laboratory, Cincinnati, Ohio. EPA/600/2-89-024, 1990.

32. U.S. Environmental Protection Agency. Technology Evaluation Report: SITE Program Demonstration Test, Terra Vac In Situ Vacuum Extraction System, Groveland, Massachusetts, Volume I. U.S. Environmental Protection Agency, Risk Reduction Engineering Laboratory, Cincinnati, Ohio. EPA/540/5-89/ 003a, 1989.

33. U.S. Environmental Protection Agency. Technology Screening Guide for Treatment of CERCLA Soils and Sludges. Office of Emergency and Remedial Response, Washington, D.C. EPA/540/2-88/004, 1988.

34. U.S. Environmental Protection Agency. Terra Vac In Situ Vacuum Extraction System, Applications Analysis Report. Risk Reduction Engineering Laboratory, Cincinnati, Ohio. EPA/540/A5-89/003, 1989.

35. U.S. Environmental Protection Agency. Test Methods for Evaluating Solid Waste. 3rd Ed., Office of Solid Waste and Emergency Response, Washington, D.C. SW-846, 1986.

36. U.S. Environmental Protection Agency. Treatability Studies Under CERCLA: An Overview. Office of Solid Waste and Emergency Response, Washington, D.C. OSWER Directive 9380.3-02FS.11, 1989.

37. U.S. Environmental Protection Agency. Verona Well Field - Thomas Solvent Company, Battle Creek, Michigan, Operable Unit Feasibility Study. Region V. 1985.

38. Valsaraj, K.T., L.J. Thibodeaux. Equilibrium Adsorption of Chemical Vapors on Surface Soils, Landfills, and Landfarms - A Review. Journal of Hazardous Materials, 19: 79-99, 1988.

39. Wilson, D.J. Soil Cleanup by In Situ Aeration. V. Vapor Stripping from Fractured Bedrock. Separation Science and Technology, 25(3): 243-262, 1990.

40. Wilson, D.J., A.N. Clarke, and J.H. Clarke. Soil Cleanup by In Situ Aeration. I. Mathematical Modeling. Separation Science and Technology, 23(10 & 11): 991-1037, 1988.

41. Wilson, D.J., A.N. Clarke, and R.D. Mutch, Jr. Soil Cleanup by In Situ Aeration. III. Passive Vent Wells, Recontamination, and Removal of Underlying Nonaqueous Phase Liquid. Separation Science and Technology, 24 (12): 939-979, 1989.

42. 40 CFR 286; Appendix I; 51 FR 40643, November 1986.

SECTION 8
GLOSSARY

This glossary defines terms used in this guide. The definitions apply specifically to the treatability study process. They may have other meanings when used in different contexts.

adsorption – The process by which a contaminant molecule or other type of molecule is attracted and held on a solid surface.

advection — The process of transfer of fluids (vapors or liquids) through a geologic formation in response to a pressure gradient that may be caused by changes in water table levels, rainfall percolation, or induced lows (pressurized air or vacuum).

air permeability — A measure of the ability of a soil to transmit gases. This property relates the pressure gradient to the flow. Air permeability can be measured in darcies, which are expressed in cm^2.

aquifer — A porous, underground geological formation-often composed of limestone, sand, or gravel-bounded by impervious rock or clay and able to store water and transmit economic quantities of water to wells and springs.

bentonite — An expanding colloidal clay, largely made up of the mineral sodium montmorillonite, anhydrated aluminum silicate.

bulk density — The amount of mass of a soil per unit volume of soil; where mass is measured after all water has been extracted and total volume includes the volume of the soil itself and the volume of air space between the soil grains.

capillary fringe — The zone of a soil (porous medium) above the water table within which water is drawn by capillary action. The capillary fringe is usually saturated and it is considered to be pat of the vadose zone.

dense nonaqueous phase liquid (DNAPL) — A liquid consisting of a solution of free organic compounds which is more dense than water. These liquids will sink until they reach an impermeable geological layer such as clay. DNAPL pools can be found below the water table. DNAPLs are often composed of chlorinated hydrocarbons.

Henry's Law — The relationship between the partial pressure of a compound and its equilibrium concentration in a dilute aqueous solution through a constant of proportionality known as the Henry's Law Constant. The compound is the solute portion of the solution.

impermeable cap — A ground covering (synthetic or natural) that prevents the passage of air or water into the ground. These are used to increase the radius of influence of extraction wells and reduce the infiltration of soil water.

injection well — A well that serves as a conduit for atmospheric air to strata below the surface of the ground. Pressurized air is injected into the injection well.

inlet well — A well used during soil vapor extraction through which air enters the soil under the influence of the vacuum from the extraction well.

in situ treatment — The process of treating a contaminated matrix (soil, sludge, or ground water) in place without excavation. In situ processes may use physical, chemical, thermal, or biological technologies to treat the site.

lead agency — The Federal or State agency having primary responsibility and authority for planning and executing remediation at a CERCLA site.

light nonaqueous phase liquid (LNAPL) — A liquid consisting of a solution of free organic compounds which is less dense than water. LNAPL will move downward until it reaches the water table. LNAPL pools can be found floating on the water table.

mobility — The ability of a contaminant to migrate from its source.

molecular diffusion — The process where molecules tend to migrate from areas of high concentration to areas of low concentration.

nonaqueous phase liquid (NAPL) — A liquid consisting of a solution of organic compounds.

partial pressure — The portion of total vapor pressure due to one or more constituents in a vapor mixture.

permeability — A measure of a soil's ability to permit fluid flow. Permeability, along with fluid viscosity and density, are used to determine fluid conductivity.

piezometer — An instrument used to measure pressure head. Often used in reference to tubes inserted into the soil for measuring water level in soil.

porosity — The volume fraction of a rock, soil, or unconsolidated sediment not occupied by solid material but usually occupied by water and/or air.

pressure gradient — A pressure differential in a given medium, such as water or air, which tends to induce movement from areas of higher pressure to areas of lower pressure.

pulsed venting — A method of operation in which the system vacuum, or vacuum to an individual extraction well, is operated intermittently. During periods when the vacuum is off, the contaminant vapors re-equilibrate with contaminant in the stationary phases. When the system is turned back on, extracted vapors have higher concentrations. Pulsed venting may be less expensive than continuous operation due to lower power consumption.

radius of influence — The radial distance from an extraction well that has adequate air flow for effective removal of contaminants when a vacuum is applied to the extraction well.

Raoult's Law — A physical law which describes the relationship between the vapor pressure of a component over a solution, the vapor pressure of the same component over pure liquid, and the mole fraction of the component in the solution. The component is the solvent portion of the solution. For an ideal solution: $P = (X)(P^o)$

Where:
P = vapor pressure of the component over the solution.
X = mole fraction of the component in the solution.
P^o = vapor pressure of the pure component.

Resource Conservation and Recovery Act (RCRA) — A 1976 Federal law that established a regulatory system to track hazardous substances from the time of generation to disposal. Designed to prevent new CERCLA sites from ever being created, RCRA requires the use of safe and secure procedures in the treatment, transport, storage, and disposal of hazardous wastes. RCRA was amended in 1984 by the Hazardous and Solid Waste Amendments (HSWA).

Toxic Characteristic Leaching Procedure (TCLP) — The method for determining one of the four hazardous waste characteristics defined under RCRA (40 CFR 261.24). A waste is toxic if the TCLP extract is found to contain concentrations of certain metals, organic compounds, and pesticides in excess of those listed in RCRA.

soil gas survey — Investigation of the distribution of soil gas concentrations in three dimensions. The term may apply to the map or to data documenting the soil gas concentrations.

vadose zone — A subsurface zone containing water below atmospheric pressure and gases at atmospheric pressure (typically unsaturated).

vapor extraction well — A well to which a vacuum is applied. The applied vacuum provides a motive force to remove contaminated vapors using atmospheric air as a carrier gas.

vapor/liquidseparator — A device to separate, through additional retention time, physical means, or cooling, entrained liquids from a vapor stream.

vapor pressure — The equilibrium pressure exerted on the atmosphere by a liquid or solid at a given temperature. Also a measure of a substance's propensity to evaporate or give off vapors. The higher the vapor pressure, the more volatile the substance.

volatilization — The process of transfer of a chemical from the water or liquid or adsorbed phase to the air or vapor phase. Solubility, molecular weight, and vapor pressure of the liquid, and the nature of the air-liquid/water interface, affect the rate of volatilization.

water table — The water surface in an unconfined aquifer at which the fluid pressure in the voids is at atmospheric pressure.

well screen — The segment of well casing which has slots to permit the flow of liquid or air but prevent the passage of soil or backfill particles.

APPENDIX A
GENERAL PROCEDURE FOR CONDUCTING COLUMN TESTS

Table A-1. General Procedure for Conducting Column Tests

Preparation

1. Calibrate vacuum/pressure sensors.
2. Calibrate air-flow meter.
3. Calibrate contaminant measuring device.
4. Check vacuum pump and perform any required maintenance.
5. Leak check equipment.

Field

1. Select sampling areas.
2. Collect sufficient sample material for analysis and to run a minimum of five tests.
3. Composite the sample material.
4. Seal sample containers and cool them to prevent loss of volatiles.

Laboratory

1. Analyze composited samples for soil gas concentrations, contaminant concentration in the soil, contaminant concentrations in TCLP leachate, moisture, density, and porosity.
2. Prepare five columns for testing.
   Fill five columns with composited sample material. The material should be compacted to simulate field densities.
3. Allow the columns to equilibrate to the temperature of the test.
4. Start the column testing under the following conditions (See section 4.2.2.)

   Column 1 - Base test conditions; sacrifice at 1/2 estimated end-point
   Column 2 - End-point determination (Use base test conditions.)
   Column 3 - End-point determination (Use base test conditions.)
   Column 4 - Duplicate of base test conditions
   Column 5 - Low air-flow rate test
5. Collect the following data on a bi-hourly basis during the day:
   - Vacuum level
   - Ambient temperature
   - Air-flow rate
   - Humidifier liquid level
6. Collect the following effluent gas data twice daily for the base column and daily for the other columns at the beginning of the run. When contaminant concentrations are not changing rapidly, the analyses can be collected once every 2 to 3 days:

- Contaminant concentrations
- Moisture content

Note that an on-line instrument also could be used to give continuous measurements.

7. Calibrate analytical instruments on the days used, or check calibration and recalibrate as needed.

8. Use porosity measurements to calculate air-flow volume required for one pore-volume exchange.

9. Plot the contaminant removal data versus time and versus the pore-volumes of air passed through the column.

10. Determine end-point as discussed in section 4.2.2 of the text.

APPENDIX B
GENERAL PROCEDURE FOR CONDUCTING AIR PERMEABILITY TESTS

Table B-1. General Procedure for Conducting Air Permeability Tests

Preparation

1. Calibrate vacuum/pressure sensors.
2. Calibrate air-flow meter.
3. Calibrate contaminant measuring device.
4. Check vacuum pump and perform any required maintenance.
5. Leak check equipment.

Field

1. Select areas for taking measurements.
2. Insert extraction and/or injection wells, and pressure probes.
3. Check for leaks and adequate sealing.
4. Establish an air flow. (Corresponding to 1 to 4 in Hg vacuum or pressure).
   - Measure pressure profiles and air-flow rate as functions of time.
   - Allow vacuum and air flow to stabilize.
   - Measure ambient or background contaminant concentrations in the surrounding air.
   - Measure contaminant concentrations and moisture level at the beginning and end of each run.
   - Plot the pressure profiles versus the log of time, and calculate the air permeability per Johnson[12] or an equivalent method.
5. Increase air flow. (Increase vacuum by 2 in Hg if possible.)
   Repeat above measurements.
6. Move probes to next position and repeat the above steps.

NOTE:
Different vacuums or pressures may be required for the testing, depending on local conditions. For example, high vacuums may be required when testing the air permeability of bedrock.

APPENDIX C
GENERAL PROCEDURE FOR CONDUCTING FIELD VENT TESTS

Table C-1. General Procedure for Conducting Field Vent Test

Preparation

1. Calibrate vacuum/pressure sensors.
2. Calibrate air-flow meter.
3. Calibrate contaminant measuring device.
4. Check vacuum pump and perform any required maintenance.
5. Leak check equipment.

Field

1. Select areas for taking measurements.
2. Drill vapor extraction well and air injection well (if applicable).
3. Insert pressure probes.
4. Check for leaks and adequate sealing of the well and probes.
5. Establish extraction flow.
   - Measure pressure profiles and air-flow rate as functions of time.
   - Allow vacuum and air flow to stabilize.
   - Measure contaminant concentrations before and after treatment system, carbon dioxide (optional), moisture level in the effluent gas twice daily, and water level in the vapor-liquid separator.
   - Measure ambient or background contaminant concentrations in the surrounding air.
   - Note any weather extremes (e.g., heavy rains, snow, etc.).
6. Determine screen placement, radius of influence, any need for an impermeable cap.
7. Measure contaminant concentrations in water collected at the end of the test.
8. Move to other areas of the site and repeat the test if site characteristics warrant further testing.

APPENDIX D
COST-ESTIMATION DATA FOR IMPLEMENTING SVE TECHNOLOGY

Table D-1. SVE Cost Estimation

Components	Operating size range	Flow range (scfm)	Cost Capital	Cost O&M	Notes
Extraction Well			$2,000-5,000/well		
Construction					
			PVC	304 SS	
Casing	2 inch		$2-3/ft	$12-14fr	SCH. 40
	4 inch		$3-5/ft	$23-25/ft	
	6 inch		$7-12/ft	$36-40/ft	
Screen	2 inch		$2-4/ft	$15-17/ft	SCH. 40
	4 inch		$5-7/ft	$27-31/ft	Any slot Size
	6 inch		$10-15/ft	$41-46/ft	
Sand or Gravel			$15-20/yd3		
Piping	2 inch		$1-2/ft	$9.5-11/ft	SCH 40
	4 inch		$2-4/ft	$22-25/ft	SCH 40
	6 inch		$6-10/ft	$34-38/ft	
	8 inch		$12-16/ft	$52-55/ft	
Valves (Ball)	2 inch		$60	$1,000	SCH 40
	4 inch		$150	$2,000-2,200	
	6 inch		$700	$3,200	
	8 inch		$1,300	$5,000	
Joints (Elbow)	2 inch		$11	$20	SCH 40
	4 inch		$50	$52	
	6 inch		$100	$300	
	8 inch		$460	$560	
Water Table Depression Pumps		45-95 gpm	$3,700		
Surface Seals					
Bentonite			$9.2/ft2		
Polyethylene			$0.25/ft2		
HDPE			$5/yd2		
Asphalt			$5/yd2		
Blower (Rotary or Ring)		0-1000 scfm	$5,000-25,000	0.75 x hp/hr	
		300-500 scfm	$13,000		
	60hp	1,000 scfm	$40,000		
Vapor/Liquid Separators	1,000 - 2,000 gal	$3,500-17,500			

Table D-1. SVE Cost Estimation (continued)

Components	Operating size range	Flow range (scfm)	Cost Capital	Cost O&M	Notes
Instrumentation					
Vacuum Gauge			$50-75		
Flow (Annular)			$300		
Sampling Port			$20-30		
Gas Chromotography/ Photoionization Detector		$20,000		Usually rented	

Table D-2. SVE System Emission Control Costs

Treatment	Flow (scfm)	Rental	Capital	Operation	Notes
Carbon Adsorption	100-500	$650/200 lb can $5,600/1,800 lb can $19,500/5,700 lb can		—	Carbon can be reactivated. Recovery and disposal of contaminant is required.
Thermal Incineration	50-570	$11,500-23,000		Fuel Cost	Natural gas Propane
Catalytic Oxidation	200 - 500 500 -1,000 1,000-5,000	$65,000-80,000 $50,000-90,000 $85,000-200,000		Fuel Cost	May be susceptible to poisoning and fouling.

*U.S. Government Printing Office: 1991— 548- 187/40630

Word-searchable version – Not a true copy

United States
Environmental Protection
Agency

Center for Environmental Research
Information
Cincinnati OH 45268

BULK RATE
POSTAGE & FEES PAID
EPA
PERMIT No. G-35

Official Business
Penalty for Private Use, $300

EPA/540/2-91/019A

Word-searchable version – Not a true copy