ERID#: 62036	LOS ALAMOS NATIONAL LABORATORY ENVIRONMENTAL RESTORATION (RRES-R) Records Processing Facility ER Records Index Form

ENTERED

Date Received: 12/9/1998 ***Processor:*** YCA ***Page Count:*** 131

Privileged: (Y/N) N ***Record Category:*** R ***Administrative Record: (Y/N)*** Y

FileFolder: N/A

Miscellaneous Comments: WASTEWATER STREAM CHARACTERIZATION FOR TA-33, TA-39, TA-49, AND TA-69 AT LOS ALAMOS NATIONAL LABORATORY, DRAFT ENVIRONMENTAL STUDY CHARACTERIZATION REPORT #26

Record Documents:

Start Pg	Doc Type	Doc Date	Title	Box	Package
1	DRAFT STUDY	1/1/1992	WASTEWATER STREAM CHARACTERIZATION FOR TA-33, TA-39, TA-49, AND TA-69 AT LOS ALAMOS NATIONAL LABORATORY, DRAFT ENVIRONMENTAL STUDY CHARACTERIZATION REPORT #26	226	

32271

(147)

DRAFT

WASTEWATER STREAM CHARACTERIZATION FOR TA-33, 39, 49 AND 69

at

Los Alamos National Laboratory

DRAFT

ENVIRONMENTAL STUDY

CHARACTERIZATION REPORT # 28

Los Alamos Environmental Restoration Records Processing Facility

ER Record I.D.# 62036

NAGEMENT DIVISION
ional Laboratory
w Mexico 87545
United States Department of Energy

Los Alamos

WASTEWATER STREAM CHARACTERIZATION FOR TA-33, 39, 49 AND 69

ENVIRONMENTAL STUDY

prepared for:
THE LOS ALAMOS NATIONAL LABORATORY
Los Alamos, New Mexico

under subcontract 9-XG8-2874P-1

by:
Santa Fe Engineering, Ltd.
P.O. Box 1764
Santa Fe, New Mexico 87504
(505) 988-7438

January, 1992

Received by ER-RPF
DEC 09 1998
MIA

EXECUTIVE SUMMARY

All buildings in TAs 33, 39, 49 and 69 were visited to document all drain piping and to make permitting recommendations. The pipes exiting the building are as follows:

1) the following buildings have drains but no water source: 33-1, 33-24, 33-27, 33-40, 33-87, 33-89, 33-90 and 49-114,

2) the following buildings do not have any drains: 33-2, 33-16, 33-22, 33-25, 33-26, 33-28, 33-29, 33-36, 33-37, 33-70, 33-71, 33-88, 33-91, 33-95, 33-151, 33-163, 33-164, 33-165, 33-167, 33-168, 33-173, 33-175, 33-177, 33-192, 33-196, 33-199, 33-200, 33-201, 33-202, 33-203, 33-204, 33-205, 33-207, 33-208, 33-209, 33-210, 33-211, 33-212, 33-213, 33-214, 33-215, 33-216, 33-217, 33-227, 33-228, 33-229, 33-255, 39-3, 39-4, 39-5, 39-9, 39-10, 39-54, 39-56, 39-63, 39-64, 39-66, 39-67, 39-68, 39-77, 39-88, 39-95, 39-96, 39-97, 39-101, 39-115, 39-116, 39-119, 39-121, 39-122, 39-123, 39-124, 39-125, 39-134, 39-137, 39-138, 39-139, 39-141, 39-142, 39-143, 39-144, 39-145, 39-146, 39-147, 39-148, 39-150, 39-151, 39-152, 49-23, 49-101, 49-121, 49-122, 49-123, 49-124, 49-130, 49-131, 49-132, 49-133, 49-135, 69-3, 69-4, 69-5, 69-6 and 69-7,

3) from 33-19: one outfall to a septic tank,

4) from 33-20: one outfall to daylight,

5) from 33-23: one outfall to daylight,

6) from 33-39: one outfall to a septic tank,

7) from 33-86: one non-contact cooling water discharge, one outfall to a septic tank , one storm water discharge and one unpermitted outfall from a sink in a radiation contaminated room and a floor drain,

8) from 33-113: four storm water discharges, one discharge to a septic tank and one air compressor drain,

9) from 33-114: one outfall permitted as 03A038, one discharge to a septic tank and one unused and unpermitted photographic discharge,

10) from 33-129: one discharge to daylight and one air compressor drain,

11) from 33-178: one discharge to a septic tank and two storm water discharges

12) from 39-2: one discharge from a photographic dark room and from an X-ray machine that should be repiped and permitted in the 06A and 04A categories, one discharge to a septic tank that contains a photographic dark room discharge and a storm water discharge that contains non-storm water discharges,

13) from 39-6: one discharge from a cable trench and one air compressor drain,

14) from 39-7: one discharge from a cable trench and one air compressor drain,

15) from 39-8: one discharge from a cable trench,

16) from 39-57: one discharge from a cable trench and one air compressor drain,

17) from 39-62: one discharge from a potable water back flow preventer, one discharge to a septic tank and one discharge from a hot water heater,

18) from 39-69: one non-contact cooling water discharge permitted as 04A141, one discharge from a potable water back flow preventer, one drain from an air drier, one air compressor drain and one non-contact cooling water discharge that is not permitted,

19) from 39-89: six storm water discharges, one discharge to a septic tank, one non-contact cooling water discharge permitted as 04A156 and one vapor vent,

20) from 39-89: five storm water discharges, one discharge to a septic tank and one fire water discharge,

21) from 39-100: one discharge to a septic tank and one hot water heater discharge,

22) from 39-103: one discharge to a septic tank and one hot water heater discharge,

23) from 39-107: one discharge to a septic tank,

24) from 39-111: six storm water discharges, one discharge to a septic tank and one hot water heater discharge,

25) from 49-113: one discharge to a septic tank and one hot water heater discharge,

26) from 49-115: one discharge to a septic tank, one hot water heater discharge and four storm water discharges,

27) from 69-1: one discharge to a septic tank,

28) from 69-2: one discharge to a septic tank,

29) from 69-8: one discharge from two potable water back flow preventers.

Revised EPA Forms 2C are included for the appropriate outfalls. Flows shown on the forms are estimated from site observations and discussions with users, and analytical data are defined from information obtained from previously sampled outfalls.

Recommendation for repiping are provided to permit outfall consolidation to minimize permit maintenance requirements. Floor drain plugging is recommended where potential for discharge of pollutants exists.

A waste stream database has been prepared listing wastewater type and flow rate for each outfall.

TABLE OF CONTENTS

1.0 INTRODUCTION 1

2.0 FIELD INVESTIGATION 3

3.0 RECOMMENDATIONS FOR BUILDINGS WITH NO WATER SOURCE 4

4.0 RECOMMENDATIONS FOR BUILDINGS WITH NO DRAINS 4

5.0 RECOMMENDATIONS FOR BUILDING 33-19 4

6.0 RECOMMENDATIONS FOR BUILDING 33-20 5

7.0 RECOMMENDATIONS FOR BUILDING 33-23 5

8.0 RECOMMENDATIONS FOR BUILDING 33-39 5

9.0 RECOMMENDATIONS FOR BUILDING 33-86 6

9.1 Outfall 33-86-OPN-1 6
9.2 Outfall 33-86-OPN-2 6
9.3 Outfall 33-86-OPN-3 7
9.4 Outfall 33-86-OPN-4 7

10.0 RECOMMENDATIONS FOR BUILDING 33-113 7

10.1 Outfall 33-113-OPN-1, OPN-3, OPN-4 and OPN-5 7
10.2 Outfall 33-113-OPN-2 7
10.3 Outfall 33-113-OPN-6 8

11.0 RECOMMENDATIONS FOR BUILDING 33-114 8

11.1 Outfall 33-114-OPN-1 8
11.2 Outfall 33-114-OPN-2 8
11.3 Outfall 33-114-OPN-3 9

12.0 RECOMMENDATIONS FOR BUILDING 33-129 9

12.1 Outfall 33-129-OPN-1 9
12.2 Outfall 33-129-OPN-2 9

13.0 RECOMMENDATIONS FOR BUILDING 33-178 10

13.1 Outfall 33-178-OPN-1 10
13.2 Outfalls 33-178-OPN-2 and OPN-3 10

14.0 RECOMMENDATIONS FOR BUILDING 39-2 10

14.1 Outfall 39-2-OPN-1 10
14.2 Outfall 39-2-OPN-2 11
14.3 Outfall 39-2-OPN-3 11

15.0 RECOMMENDATIONS FOR BUILDING 39-6 11

15.1 Outfall 39-6-OPN-1 11
15.2 Outfall 39-6-OPN-2 12

16.0 RECOMMENDATIONS FOR BUILDING 39-7 12

16.1 Outfall 39-2-OPN-1 12
16.2 Outfall 39-2-OPN-2 12

17.0 RECOMMENDATIONS FOR BUILDING 39-8 12

18.0 RECOMMENDATIONS FOR BUILDING 39-57 13

18.1 Outfall 39-57-OPN-1 13
18.2 Outfall 39-57-OPN-2 13

19.0 RECOMMENDATIONS FOR BUILDING 39-62 13

19.1 Outfall 39-62-OPN-1 13
19.2 Outfall 39-62-OPN-2 14
19.3 Outfall 39-62-OPN-3 14

20.0 RECOMMENDATIONS FOR BUILDING 39-69 14

20.1 Outfall 39-69-OPN-1 14
20.2 Outfall 39-69-OPN-2 14
20.3 Outfall 39-69-OPN-3 15
20.4 Outfall 39-69-OPN-4 15
20.5 Outfall 39-69-OPN-5 15

21.0 RECOMMENDATIONS FOR BUILDING 39-89 15

21.1 Outfall 39-89-OPN-1, OPN-2, OPN-5, OPN-7, OPN-8 and OPN-9 15
21.2 Outfall 39-89-OPN-3 16
21.3 Outfall 39-89-OPN-4 16
21.4 Outfall 39-89-OPN-6 16

22.0 RECOMMENDATIONS FOR BUILDING 39-98 16

22.1 Outfall 39-98-OPN-1, OPN-2, OPN-3, OPN-6 and OPN-7 16
22.2 Outfall 39-98-OPN-4 17
22.3 Outfall 39-98-OPN-5 17

23.0 RECOMMENDATIONS FOR BUILDING 39-100 17

23.1 OUTFALL 39-100-OPN-1 17
23.2 OUTFALL 39-100-OPN-2 18

24.0 RECOMMENDATIONS FOR BUILDING 39-103 18

24.1 Outfall 39-103-OPN-1 18
24.2 Outfall 39-103-OPN-2 18

25.0 RECOMMENDATIONS FOR BUILDING 39-107 18

26.0 RECOMMENDATIONS FOR BUILDING 39-111 19

26.1 OUTFALL 39-111-OPN-1, OPN-2, OPN-3, OPN-5, OPN-7 and OPN-8 19
26.2 OUTFALL 39-111-OPN-4 19
26.3 OUTFALL 39-111-OPN-6 19

27.0 RECOMMENDATIONS FOR BUILDING 49-113 19

27.1 Outfall 49-113-OPN-1 20
27.2 Outfall 49-113-OPN-2 20

28.0 RECOMMENDATIONS FOR BUILDING 49-115 20

28.1 Outfall 49-115-OPN-1 20
28.2 Outfall 49-115-OPN-2 20
28.3 Outfall 49-115-OPN-3, OPN-4, OPN-5 and OPN-6 20

29.0 RECOMMENDATIONS FOR BUILDING 69-1 21

30.0 RECOMMENDATIONS FOR BUILDING 69-2 21

31.0 RECOMMENDATIONS FOR BUILDING 69-8 21

32.0 CONCLUSION 22

APPENDICES

Appendix 1 - DRAIN SUMMARY TABLES
Appendix 2 - WASTE STREAM CHARACTERIZATION DATABASE
Appendix 3 - EPA FORMS
Appendix 4 - DYE STUDY INFORMATION
Appendix 5 - DRAINS SCHEMATICS

LIST OF TABLES

1. TA 33-19 DRAIN SUMMARY
2. TA 33-20 DRAIN SUMMARY
3. TA 33-23 DRAIN SUMMARY
4. TA 33-39 DRAIN SUMMARY
5. TA 33-86 DRAIN SUMMARY
6. TA 33-113 DRAIN SUMMARY
7. TA 33-114 DRAIN SUMMARY
8. TA 33-129 DRAIN SUMMARY
9. TA 33-178 DRAIN SUMMARY
10. TA 39-2 DRAIN SUMMARY
11. TA 39-6 DRAIN SUMMARY
12. TA 39-7 DRAIN SUMMARY
13. TA 39-8 DRAIN SUMMARY
14. TA 39-57 DRAIN SUMMARY
15. TA 39-62 DRAIN SUMMARY
16. TA 39-69 DRAIN SUMMARY
17. TA 39-89 DRAIN SUMMARY
18. TA 39-98 DRAIN SUMMARY
19. TA 39-100 DRAIN SUMMARY
20. TA 39-103 DRAIN SUMMARY
21. TA 39-107 DRAIN SUMMARY
22. TA 39-111 DRAIN SUMMARY
23. TA 49-113 DRAIN SUMMARY
24. TA 49-115 DRAIN SUMMARY
25. TA 69-1 DRAIN SUMMARY
26. TA 69-2 DRAIN SUMMARY
27. TA 69-8 DRAIN SUMMARY
28. ABBREVIATIONS

LIST OF FIGURES

1. TA 33-19 BUILDING DRAIN SCHEMATIC
2. TA 33-20 BUILDING DRAIN SCHEMATIC
3. TA 33-23 BUILDING DRAIN SCHEMATIC
4. TA 33-39 BUILDING DRAIN SCHEMATIC
5. TA 33-86 BUILDING DRAIN SCHEMATIC
6. TA 33-113 BUILDING DRAIN SCHEMATIC
7. TA 33-114 BUILDING DRAIN SCHEMATIC
8. TA 33-129 BUILDING DRAIN SCHEMATIC
9. TA 33-178 BUILDING DRAIN SCHEMATIC
10. TA 39-2 BUILDING DRAIN SCHEMATIC
11. TA 39-6 BUILDING DRAIN SCHEMATIC
12. TA 39-7 BUILDING DRAIN SCHEMATIC
13. TA 39-8 BUILDING DRAIN SCHEMATIC
14. TA 39-57 BUILDING DRAIN SCHEMATIC
15. TA 39-62 BUILDING DRAIN SCHEMATIC
16. TA 39-69 BUILDING DRAIN SCHEMATIC
17. TA 39-89 BUILDING DRAIN SCHEMATIC
18. TA 39-98 BUILDING DRAIN SCHEMATIC
19. TA 39-100 BUILDING DRAIN SCHEMATIC
20. TA 39-103 BUILDING DRAIN SCHEMATIC
21. TA 39-107 BUILDING DRAIN SCHEMATIC
22. TA 39-111 BUILDING DRAIN SCHEMATIC
23. TA 49-113 BUILDING DRAIN SCHEMATIC
24. TA 49-115 BUILDING DRAIN SCHEMATIC
25. TA 69-1 BUILDING DRAIN SCHEMATIC
26. TA 69-2 BUILDING DRAIN SCHEMATIC
27. TA 69-8 BUILDING DRAIN SCHEMATIC

1.0 INTRODUCTION

During October, November and December, 1991 and January, 1992, Patrick E. Binkley of Santa Fe Engineering (SFE) toured the buildings of TA-33, TA-39, TA-49 and TA-69 with Mike Saladen of EM-8, Steve Diamond of SFE, Bill Bentley of IT-6, Dave Anderson of EES-4, Tony Valerio of M-6 and Lou Horach of WX-5. The purpose of this study is to identify building drain piping and to characterize the wastewater flows. The following tasks were performed for this purpose:

1. Building drains and all piping exiting the building were identified and laid out in schematic form;

2. Wastewater sources were identified at each drain and the wastewater was characterized according to flow rate and quality. Potential pollutants were also noted;

3. Permit applications for discharges of clean water discharges were not prepared since these discharges do not require permitting at this time; and

4. Potential problems were identified and recommendations were made for repiping, floor drain plugging and spill containment, where deemed appropriate.

The field investigation proceeded by verifying drain schematic drawings prepared by SFE for the appropriate buildings (Figures 1 through 27) from drawings provided by Los Alamos National Laboratory (LANL) Facilities Engineering Division. The other buildings were visited to insure that no drains exist in the buildings. The following process was used to define drain piping and characterize the wastewater streams:

1. Laboratory engineering drawings were used to prepare the SFE drain piping schematic. The Solid Waste Stream

Characterization conducted by IT Corporation was also reviewed. The NPDES Permit, the 1990 NPDES Permit Application submitted by LANL in September, 1990 and the latest Federal Facilities Compliance Agreement (FFCA) between DOE and EPA were used for reference;

2. A site visit was performed to verify the SFE drain schematic and to identify potential outfall pipes exiting the building. The visit entailed a room by room inspection of wastewater sources and drains, and interviews with site personnel to assist in waste stream characterization; and

3. SFE verified drain piping by dye checking.

2.0 FIELD INVESTIGATION

The pipes exiting the building have been assigned an Outlet Piping Number. The four part number, sequentially, identifies the Technical Area where the pipe is located, the building from which the pipe discharges, the letters OPN to indicate that it is an outlet piping number and the unique number for the pipe. The piping exiting the building will be labeled for easy identification in the future.

Each drain has a unique identification number. Each number consists of three parts. The first part is the floor the drain is on. The second part has letters that indicate the drain type (abbreviations used are summarized in Table 28). The final part is a unique number for each drain. For example, the floor drain numbering on the first floor would start with 1FD1. The roof drains do not have the number identifying the floor such as RD1 for Roof Drain 1.

The function of each pipe exiting from buildings are listed Appendix 1 in Tables 1 through 27, with an abbreviations list in Table 28. Appendix 2 contains the waste stream characterization database output, listing wastewater source, flow rates and periodicity information for each outfall drain. Completed EPA Forms 2C and 2D are in Appendix 3 for the appropriate outfalls. Appendix 4 provides a information about the dye study of building drains. Flow schematics of the drains from each building are attached in Appendix 5 as Figures 1 through 27.

3.0 RECOMMENDATIONS FOR BUILDING WITH NO WATER SOURCE

Buildings 33-1, 33-24, 33-27, 33-40, 33-87, 33-89, 33-90 and 49-114 have drains but no source of water. No piping changes or permitting are recommended. No EPA Forms were prepared.

4.0 RECOMMENDATION FOR BUILDING WITH NO DRAINS

Buildings TA 33-2, 33-16, 33-22, 33-25, 33-26, 33-28, 33-29, 33-36, 33-37, 33-70, 33-71, 33-88, 33-91, 33-95, 33-151, 33-163, 33-164, 33-165, 33-167, 33-168, 33-173, 33-175, 33-177, 33-192, 33-196, 33-199, 33-200, 33-201, 33-202, 33-203, 33-204, 33-205, 33-207, 33-208, 33-209, 33-210, 33-211, 33-212, 33-213, 33-214, 33-215, 33-216, 33-217, 33-227, 33-228, 33-229, 33-255, 39-3, 39-4, 39-5, 39-9, 39-10, 39-54, 39-56, 39-63, 39-64, 39-66, 39-67, 39-68, 39-77, 39-88, 39-95, 39-96, 39-97, 39-101, 39-115, 39-116, 39-119, 39-121, 39-122, 39-123, 39-124, 39-125, 39-134, 39-137, 39-138, 39-139, 39-141, 39-142, 39-143, 39-144, 39-145, 39-146, 39-147, 39-148, 39-150, 39-151, 39-152, 49-23, 49-101, 49-121, 49-122, 49-123, 49-124, 49-130, 49-131, 49-132, 49-133, 49-135, 69-3, 69-4, 69-5, 69-6 and 69-7 do not have drains. No changes or permitting are recommended. No EPA Forms were completed.

5.0 RECOMMENDATIONS FOR BUILDING 33-19

Table 1 is a list of the drains to the building outfalls and Figure 1 is a schematic of the piping. According to the LANL sewer maps, the one outfall is to septic tank TA-33-31. This flow could not be verified. A sign for another septic tank (TA-33-122) was found near the first tank, but the tank was not located. No evidence was seen to indicate that the flow was not going to a septic tank. Further investigation is needed to verify the destination of the outfall. Repiping the roof drains as a separate outfall is recommended. No permitting is recommended. No EPA Forms were completed.

6.0 RECOMMENDATIONS FOR BUILDING 33-20

Table 2 is a list of the drains to the building outfall and Figure 2 is a schematic of the piping. This building has two floor drains that are supposed to daylight to the canyon east of the building. The outfall pipe could not be located. The building has no source of water for the drains. Plugging of the floor drains is recommended. No permitting is recommended and no EPA Forms were completed.

7.0 RECOMMENDATIONS FOR BUILDING 33-23

Table 3 is a list of the drains to the building outfall and Figure 3 is a schematic of the piping. The sink that flows to this outfall does not presently have any water supply. Schon Levy of the Geology and Geochemistry Group (EES-1) would like to be able to use the sink for hand washing. For this purpose, the outlet from the settling tank should be plugged and the tank included on the schedule for the vacuum truck that cleans out the septic tanks. No permitting is recommended and no EPA Forms were completed.

8.0 RECOMMENDATION FOR BUILDING 33-39

Table 4 is a list of the drains to the building outfall and Figure 4 is a schematic of the piping. According to the LANL sewer maps, the one outfall is to septic tank TA-33-31. This flow could not be verified. A sign for another septic tank (TA-33-122) was found near the first tank, but the tank was not located. No evidence was seen to indicate that the flow was not going to a septic tank. Further investigation is needed to verify the destination of the outfall. Removal of the sink in the shop area is recommended. No permitting is recommended. No EPA Forms were completed.

9.0 RECOMMENDATIONS FOR BUILDING 33-86

Table 5 is a list of the drains to the building outfalls and Figure 5 is a schematic of the piping. The table lists the drains that connect to the outfall pipe and includes recommendations for changes to the drain piping. The discussion below gives the reasoning for the recommendations.

9.1 Outfall 33-86-OPN-1

This outfall is permitted as 04A147 and receives flow from three sinks and a floor drain. Three floor drains (1FD2, 1FD3 and 1FD4) attached to the piping are covered with metal plates. Permanent plugging of these drains is recommended. The one active floor drain (1FD1) is also covered with a metal plate. The plate has a hole in it with tubing from a heat exchanger inserted through the hole into the drain. Lou Horach of the Weapons Subsystems Group (WX-5) says that the heat exchanger is not currently used and will probably not be used in the future. Plugging of the drain with a temporary plug is recommended so as to eliminate the potential for a spill of tritium contaminated water. Removal and plugging of the sink is also recommended as the sinks are not used. A source of water will be needed for the janitor's mop water in lieu of sink 1S1. Removal of this permitted outfall is recommended. No EPA Forms were completed.

9.2 Outfall 33-86-OPN-2

This outfall receives flow from sanitary facilities and an equipment room. The flow is to septic tank (TA-33-93). The flows from the equipment room go to drains 1FD5 and 1FD6 and are from an air compressor, a chiller blow down and hot water leaks. No piping changes or permitting are recommended. No EPA Forms were completed.

9.3 Outfall 33-86-OPN-3

This outfall receives flow from one roof drain. No piping changes or permitting actions are recommended. No EPA Forms were completed.

9.4 Outfall 33-86-OPN-4

This outfall could receive flow from one floor drain and one sink and is not permitted. The sink is in a radioactive contaminated room and has no source of water. Plugging of the sink and floor drain is recommended. No permitting is recommended. No EPA Forms were completed.

10.0 RECOMMENDATIONS FOR BUILDING 33-113

Table 6 is a list of the drains to the building outfalls and Figure 6 is a schematic of the piping. The table lists the drains that connect to the outfall pipe and includes recommendations for changes to the drain piping. The discussion below gives the reasoning for the recommendations.

10.1 Outfalls 33-113-OPN-1, OPN-3, OPN-4 and OPN-5

These outfalls are roof drains. No piping changes or permitting are recommended. No EPA Forms were completed.

10.2 Outfall 33-113-OPN-2

This outfall receives flow from sanitary facilities and drains to septic tank TA-33-31. No piping changes or permitting are recommended. No EPA Forms were completed.

10.3 Outfall 33-113-OPN-6

This outfall is from a knockout pot on an air compressor. Collecting the water in a container is recommended so that the any oil will be contained. No EPA Forms were completed.

11.0 RECOMMENDATIONS FOR BUILDING 33-114

Table 7 is a list of the drains to the building outfalls and Figure 7 is a schematic of the piping. The table lists the drains that connect to the outfall pipe and includes recommendations for changes to the drain piping. The discussion below gives the reasoning for the recommendations.

11.1 Outfall 33-114-OPN-1

This outfall is permitted as 03A038 and receives flow from sinks and floor drains in offices, sinks in a chemical lab, a kitchen sink, roof drains and equipment in the basement. Most of the sinks are not used. The kitchen and chemical lab sinks are used. No chemicals are drained to any of the sinks. Repiping of the first floor sinks and floor drains to the septic tank is recommended. Repiping the basement equipment drains as a new outfall is recommended. This new outfall would become the permitted outfall. The roof drains would then be the only source to the existing outfall. An EPA Form 2C is attached for the permitted outfall.

11.2 Outfall 33-114-OPN-2

This outfall is from sanitary facilities. Inclusion of new drains to this outfall is discussed above. According to the LANL sewer maps, the one outfall is to septic tank TA-33-31. This flow could not be verified. A sign for another septic tank (TA-33-122) was found near the first tank, but the tank was not located. No evidence was seen to indicate that the flow was not

going to a septic tank. Further investigation is needed to verify the destination of the outfall. No EPA Forms were completed.

11.3 Outfall 33-114-OPN-3

This outfall is from a photo processing sink and has not yet been used. The users are waiting for permission to use the outfall. Plugging of this outfall is recommended. No permitting is recommended and no EPA Forms are attached.

12.0 RECOMMENDATIONS FOR BUILDING 33-129

Table 8 is a list of the drains to the building outfalls and Figure 8 is a schematic of the piping. The table lists the drains that connect to the outfall pipe and includes recommendations for changes to the drain piping. The discussion below gives the reasoning for the recommendations.

12.1 Outfall 33-129-OPN-1

This outfall is from a floor drain in an almost empty equipment room. When water was run down the drain, the destination of the outfall could not be determined. Plugging of this drain is recommended. No permitting is recommended. No EPA Forms were completed.

12.2 Outfall 33-129-OPN-2

This outfall is from a knockout pot on an air compressor. Collecting the water in a container is recommended so that the any oil will be contained. No EPA Forms were completed.

13.0 RECOMMENDATIONS FOR BUILDING 33-178

Table 9 is a list of the drains to the building outfalls and Figure 9 is a schematic of the piping. The table lists the drains that connect to the outfall pipe and includes recommendations for changes to the drain piping. The discussion below gives the reasoning for the recommendations.

13.1 Outfall 33-178-OPN-1

The drains to this outfall are all from sanitary sources. The outfall flows to a septic tank. No changes or permitting are recommended. No EPA Forms were completed.

13.2 Outfalls 33-178-OPN-2 and OPN-3

These two outfalls are roof drains. No changes or permitting are recommended. No EPA Forms were completed.

14.0 RECOMMENDATIONS FOR BUILDING 39-2

Table 10 is a list of the drains to the building outfalls and Figure 10 is a schematic of the piping. The table lists the drains that connect to the outfall pipe and includes recommendations for changes to the drain piping. The discussion below gives the reasoning for the recommendations.

14.1 Outfall 39-2-OPN-1

This outfall receives rinse water from a photographic dark room and non-contact cooling water from an X-ray machine. The outfall presently discharges to a seepage pit. The outfall should be piped to the nearby arroyo. The discharge from the X-ray machine should be piped as a separate outfall and permitted in the 04A category. EPA Forms 2C are included for both outfalls.

14.2 Outfall 39-2-OPN-2

This outfall receives flow from sanitary facilities, floor drains in a shop, a kitchen sink, a dark room sink and sink in offices and labs. No chemicals are drained to the sinks in the offices and labs. The sink in the dark room should be discharged with the dark room sink that is part of OPN-1. The floor drains in the shop should be plugged. No permitting is recommended for this outfall. No EPA Forms were prepared.

14.3 Outfall 39-2-OPN-3

This outfall receives flow from roof drains and equipment room drains. Repiping of the discharge from the equipment room sump pump as a new outfall is recommended. This new outfall would be covered under a Notice of Intent to Discharge (NOI). No permitting is recommended. No EPA Forms were prepared.

15.0 RECOMMENDATIONS FOR BUILDING 39-6

Table 11 is a list of the drains to the building outfalls and Figure 11 is a schematic of the piping. The table lists the drains that connect to the outfall pipe and includes recommendations for changes to the drain piping. The discussion below gives the reasoning for the recommendations.

15.1 Outfall 39-6-OPN-1

This outfall is from the drain in an electrical cable trench. Drawings indicate that the discharge is to a seepage pit. Plugging of the drain is recommended. No permitting is recommended. No EPA Forms were completed.

15.2 Outfall 39-6-OPN-2

This outfall is from a knockout pot on an air compressor. Collecting the water in a container is recommended so that the any oil will be contained. No EPA Forms were completed.

16.0 RECOMMENDATIONS FOR BUILDING 39-7

Table 12 is a list of the drains to the building outfalls and Figure 12 is a schematic of the piping. The table lists the drains that connect to the outfall pipe and includes recommendations for changes to the drain piping. The discussion below gives the reasoning for the recommendations.

16.1 Outfall 39-7-OPN-1

This outfall is from the drain in an electrical cable trench. Drawings indicate that the discharge is to a seepage pit. No piping charges or permitting are recommended. No EPA Forms were completed.

16.2 Outfall 39-7-OPN-2

This outfall is from a knockout pot on an air compressor. Collecting the water in a container is recommended so that the any oil will be contained. No EPA Forms were completed.

17.0 RECOMMENDATIONS FOR BUILDING 39-8

Table 13 is a list of the drains to the building outfall and Figure 13 is a schematic of the piping. This outfall is from the drain in an electrical cable trench. Drawings indicate that the discharge is to a seepage pit. No piping changes or permitting are recommended. No EPA Forms were completed.

18.0 RECOMMENDATIONS FOR BUILDING 39-57

Table 14 is a list of the drains to the building outfalls and Figure 14 is a schematic of the piping. The table lists the drains that connect to the outfall pipe and includes recommendations for changes to the drain piping. The discussion below gives the reasoning for the recommendations.

18.1 Outfall 39-57-OPN-1

This outfall is from the drain in an electrical cable trench. Drawings indicate that the discharge is to a seepage pit. No piping changes or permitting actions are recommended. No EPA Forms were completed.

18.2 Outfall 39-57-OPN-2

This outfall is from a knockout pot on an air compressor. Collecting the water in a container is recommended so that the any oil will be contained. No EPA Forms were completed.

19.0 RECOMMENDATIONS FOR BUILDING 39-62

Table 15 is a list of the drains to the building outfalls and Figure 15 is a schematic of the piping. The table lists the drains that connect to the outfall pipe and includes recommendations for changes to the drain piping. The discussion below gives the reasoning for the recommendations.

19.1 Outfall 39-62-OPN-1

This outfall is the drain from a potable water back flow preventer. This outfall should be covered by an NOI for potable water discharge. No permitting is recommended. No EPA Forms were completed.

19.2 Outfall 39-62-OPN-2

This outfall goes to a septic tank and is from a sink in a storage building. The sink does not appear to receive any regular flow. No changes or permitting are recommended. No EPA Forms were completed.

19.3 Outfall 39-62-OPN-3

This outfall is from the relief valve on a hot water heater. This outfall should be covered by an NOI for potable water discharge. No permitting is recommended. No EPA Forms were completed.

20.0 RECOMMENDATIONS FOR BUILDING 39-69

Table 16 is a list of the drains to the building outfalls and Figure 16 is a schematic of the piping. The table lists the drains that connect to the outfall pipe and includes recommendations for changes to the drain piping. The discussion below gives the reasoning for the recommendations.

20.1 Outfall 39-69-OPN-1

This outfall is non-contact cooling water from test equipment and is presently permitted as 04A141. No changes are recommended. An EPA Form 2C is attached for this outfall.

20.2 Outfall 39-69-OPN-2

This outfall is from a potable water back flow preventer. This outfall should be covered by an NOI for potable water discharge. No permitting is recommended. No EPA Forms were completed.

20.3 Outfall 39-69-OPN-3

This outfall is from the drain on an air drier. This outfall should be covered by an NOI for clean water discharge. No permitting is recommended. No EPA Forms were completed.

20.4 Outfall 39-69-OPN-4

This outfall is from a knock out pot on an air compressor. Collecting the water in a container is recommended so that the any oil will be contained. No EPA Forms were completed.

20.5 Outfall 39-69-OPN-5

This outfall is non-contact cooling water from test equipment and is presently not permitted. Building personnel indicated that the discharge was temporary and had been in operation since June, 1991. Combining this flow with OPN-1 is recommended. An EPA Form 2C is attached for this outfall as part of OPN-1.

21.0 RECOMMENDATIONS FOR BUILDING 39-89

Table 17 is a list of the drains to the building outfalls and Figure 17 is a schematic of the piping. The table lists the drains that connect to the outfall pipe and includes recommendations for changes to the drain piping. The discussion below gives the reasoning for the recommendations.

21.1 Outfalls 39-89-OPN-1, OPN-2, OPN-5, OPN-7, OPN-8 and OPN-9

These six outfalls are roof drains. No changes or permitting are recommended. No EPA Forms were completed.

21.2 Outfall 39-89-OPN-3

This outfall receives flow from three sinks in a testing lab. The sinks are used for hand washing and no chemicals are drained in them. The outfall probably flows to a septic tank. A stand pipe was located outside the building in which the flow could be heard. No septic tank could be located in the snow. Further investigation is needed for this outfall. No piping changes or permitting are recommended. No EPA Forms were completed.

21.3 Outfall 39-89-OPN-4

This outfall is non-contact cooling water from test equipment and is presently permitted as 04A156. No changes are recommended. An EPA Form 2C is attached for this outfall.

21.4 Outfall 39-89-OPN-6

This outfall is a gas vent and does not require permitting under NPDES. No EPA Forms were completed.

22.0 RECOMMENDATIONS FOR BUILDING 39-98

Table 18 is a list of the drains to the building outfalls and Figure 18 is a schematic of the piping. The table lists the drains that connect to the outfall pipe and includes recommendations for changes to the drain piping. The discussion below gives the reasoning for the recommendations.

22.1 Outfall 39-98-OPN-1, OPN-2, OPN-3, OPN-6 and OPN-7

These five outfalls are roof drains. No changes or permitting are recommended. No EPA Forms were completed.

22.2 Outfall 39-98-OPN-4

This outfall receives flow from sanitary facilities and a sink in the shop area and discharges to a septic tank. The six floor drains in the shop (1FD1 through 1FD6) would probably flow to the septic tank. A water supply was not available to test the drains. No sign of a daylight discharge point was seen outside the building. All of the floor drains had metal shavings in them from the operations in the shop. Plugging of these six floor drains is recommended to keep the metal shaving out of the septic tank. No other piping changes are recommended. No EPA Forms were completed.

22.3 Outfall 39-98-OPN-5

This outfall is from the drain from the fire water system. This outfall should be covered by an NOI for fire water discharge. No permitting is recommended. No EPA Forms were completed.

23.0 RECOMMENDATIONS FOR BUILDING 39-100

Table 19 is a list of the drains to the building outfalls and Figure 19 is a schematic of the piping. The table lists the drains that connect to the outfall pipe and includes recommendations for changes to the drain piping. The discussion below gives the reasoning for the recommendations.

23.1 Outfall 39-100-OPN-1

This outfall is from sanitary facilities and flows to a septic tank. No piping changes or permitting are recommended. No EPA Forms were completed.

23.2 Outfall 39-100-OPN-2

This outfall is from the relief valve on a hot water heater and should be covered by an NOI for potable water discharge. No permitting is recommended. No EPA Forms were completed.

24.0 RECOMMENDATIONS FOR BUILDING 39-103

Table 20 is a list of the drains to the building outfalls and Figure 20 is a schematic of the piping. The table lists the drains that connect to the outfall pipe and includes recommendations for changes to the drain piping. The discussion below gives the reasoning for the recommendations.

24.1 Outfall 39-103-OPN-1

This outfall is from sanitary facilities and flows to a septic tank. No piping changes or permitting are recommended. No EPA Forms were completed.

24.2 Outfall 39-103-OPN-2

This outfall is from the relief valve on a hot water heater and should be covered by an NOI for potable water discharge. No permitting is recommended. No EPA Forms were completed.

25.0 RECOMMENDATIONS FOR BUILDING 39-107

Table 21 is a list of the drains to the building outfall and Figure 21 is a schematic of the piping. This outfall is from sanitary facilities and flows to a septic tank. No piping changes or permitting are recommended. No EPA Forms were completed.

26.0 RECOMMENDATIONS FOR BUILDING 39-111

Table 22 is a list of the drains to the building outfalls and Figure 22 is a schematic of the piping. The table lists the drains that connect to the outfall pipe and includes recommendations for changes to the drain piping. The discussion below gives the reasoning for the recommendations.

26.1 Outfalls 39-111-OPN-1, OPN-2, OPN-3, OPN-5, OPN-7 and OPN-8

These six outfalls are roof drains. No changes or permitting are recommended. No EPA Forms were completed.

26.2 Outfall 39-111-OPN-4

This outfall is from sanitary facilities and flows to a septic tank. No piping changes or permitting are recommended. No EPA Forms were completed.

26.3 Outfall 39-111-OPN-6

This outfall is from the relief valve on a hot water heater and should be covered by an NOI for potable water discharge. No permitting is recommended. No EPA Forms were completed.

27.0 RECOMMENDATIONS FOR BUILDING 49-113

Table 23 is a list of the drains to the building outfalls and Figure 23 is a schematic of the piping. The table lists the drains that connect to the outfall pipe and includes recommendations for changes to the drain piping. The discussion below gives the reasoning for the recommendations.

27.1 Outfall 49-113-OPN-1

The drains to this outfall are all from sanitary sources. The outfall flows to a septic tank. No changes or permitting are recommended. No EPA Forms were completed.

27.2 Outfall 49-113-OPN-2

This outfall is from the relief valve on a hot water heater and should be covered by an NOI for potable water discharge. No permitting is recommended. No EPA Forms were completed.

28.0 RECOMMENDATIONS FOR BUILDING 49-115

Table 24 is a list of the drains to the building outfalls and Figure 24 is a schematic of the piping. The table lists the drains that connect to the outfall pipe and includes recommendations for changes to the drain piping. The discussion below gives the reasoning for the recommendations.

28.1 Outfall 49-115-OPN-1

The drains to this outfall are all from sanitary sources. The outfall flows to a septic tank. No changes or permitting are recommended. No EPA Forms were completed.

28.2 Outfall 49-115-OPN-2

This outfall is from the relief valve on a hot water heater and should be covered by an NOI for potable water discharge. No permitting is recommended. No EPA Forms were completed.

28.3 Outfalls 49-115-OPN-3, OPN-4, OPN-5 and OPN-6

These four outfalls are roof drains. No changes or permitting are recommended. No EPA Forms were completed.

29.0 RECOMMENDATIONS FOR BUILDING 69-1

Table 25 is a list of the drains to the building outfall and Figure 25 is a schematic of the piping. The outfall discharges into a septic tank. The three sources are all sanitary and are appropriate for a septic tank. No piping changes or permitting are recommended. No EPA Forms were prepared.

30.0 RECOMMENDATIONS FOR BUILDING 69-2

Table 26 is a list of the drains to the building outfall and Figure 26 is a schematic of the piping. The outfall discharges into a septic tank. The eight sources are all sanitary and are appropriate for a septic tank. No piping changes or permitting are recommended. No EPA Forms were prepared.

31.0 RECOMMENDATIONS FOR BUILDING 69-8

Table 27 is a list of the drains to the building outfall and Figure 27 is a schematic of the piping. Two potable water back flow preventers drip about 1 gallon per minute of water into the floor drains. Leakage from a back flow preventers is not to be expected during normal operation. These should be checked to determine if repairs are needed. This outfall should be covered under a potable water NOI. No EPA Forms were completed.

43.0 CONCLUSION

This document provides the information to characterize the buildings of TAs 33, 39, 49 and 69. Permit application forms have been completed for the following outfalls (Appendix 3):

Form 2C:

1. 33-86-OPN-1 (04A147)
2. 33-114-OPN-1 (03A038)
3. 39-2-OPN-1 (06A and 04A)
4. 39-69-OPN-1 (04A141)
5. 36-69-OPN-5 (04A141)
6. 39-89-OPN-4 (04A156)

Permitting is not recommended for the remaining outfalls, as itemized below:

Areas that do not have any drains:

1. 33-2	2. 33-16	3. 33-22	4. 33-25
5. 33-26	6. 33-28	7. 33-29	8. 33-36
9. 33-37,	10. 33-70	11. 33-71	12. 33-88
13. 33-91	14. 33-95	15. 33-151	16. 33-163
17. 33-164	18. 33-165	19. 33-167	20. 33-168
21. 33-173	22. 33-175	23. 33-177	24. 33-192
25. 33-196	26. 33-199	27. 33-200	28. 33-201
29. 33-202	30. 33-203	31. 33-204	32. 33-205
33. 33-207	34. 33-208	35. 33-209	36. 33-210
37. 33-211	38. 33-212	39. 33-213	40. 33-214
41. 33-215	42. 33-216	43. 33-217	44. 33-227
45. 33-228	46. 33-229	47. 33-255	48. 39-3
49. 39-4	50. 39-5	51. 39-9	52. 39-10
53. 39-54	54. 39-56	55. 39-63	56. 39-64
57. 39-66	58. 39-67	59. 39-68	60. 39-77
61. 39-88	62. 39-95	63. 39-96	64. 39-97
65. 39-101	66. 39-115	67. 39-116	68. 39-119
69. 39-121	70. 39-122	71. 39-123	72. 39-124
73. 39-125	74. 39-134	75. 39-137	76. 39-138
77. 39-139	78. 39-141	79. 39-142	80. 39-143
81. 39-144	82. 39-145	83. 39-146	84. 39-147
85. 39-148	86. 39-150	87. 39-151	88. 39-152
89. 49-23	90. 49-101	91. 49-121	92. 49-122
93. 49-123	94. 49-124	95. 49-130	96. 49-131
97. 49-132	98. 49-133	99. 49-135	100. 69-3
101. 69-4	102. 69-5	103. 69-6	104. 69-7

Areas that have drains but no water supply:

1. 33-1	2. 33-24	3. 33-27	4. 33-40
5. 33-87	6. 33-89	7. 33-90	8. 49-114

Vapor vents:

1. 39-89-OPN-6

Discharges to septic tanks:

1. 33-19-OPN-1	2. 33-39-OPN-1	3. 33-86-OPN-2
4. 33-113-OPN-2	5. 33-114-OPN-2	6. 33-178-OPN-1
7. 39-2-OPN-2	8. 39-62-OPN-2	9. 39-89-OPN-3
10.39-98-OPN-4	11. 39-100-OPN-1	12. 39-103-OPN-1
13. 39-107-OPN-1	14. 39-11-OPN-4	15. 49-113-OPN-1
16. 49-115-OPN-1	17. 69-1-OPN-1	18. 69-2-OPN-1

Storm water discharges:

1. 33-86-OPN-3	2. 33-113-OPN-1	3. 33-113-OPN-3
4. 33-113-OPN-4	5. 33-113-OPN-5	6. 33-178-OPN-2
7. 33-178-OPN-3	8. 39-2-OPN-3	9. 39-89-OPN-1
10. 39-89-OPN-2	11. 39-89-OPN-5	12. 39-89-OPN-7
13. 39-89-OPN-8	14. 39-89-OPN-9	15. 39-98-OPN-1
16. 39-98-OPN-2	17. 39-98-OPN-3	18. 39-98-OPN-6
19. 39-98-OPN-7	20. 39-111-OPN-1	21. 39-111-OPN-2
22. 39-111-OPN-3	23. 39-111-OPN-5	24. 39-111-OPN-7
25. 39-111-OPN-8	26. 49-115-OPN-3	27. 49-115-OPN-4
28. 49-115-OPN-5	29. 49-115-OPN-6	

Discharges from air compressor knockout pots:

1. 33-113-OPN-6	2. 33-129-OPN-2	3. 39-6-OPN-1
4. 39-7-OPN-2	5. 39-57-OPN-2	6. 39-69-OPN-4

Discharges from potable water back flow preventers:

1. 39-62-OPN-1	2. 39-69-OPN-2	3. 69-8-OPN-1

Discharges from hot water heaters:

1. 39-62-OPN-3	2. 39-100-OPN-2	3. 39-103-OPN-2
4. 39-111-OPN-6	5. 49-113-OPN-2	6. 49-115-OPN-2

Discharges from air driers:

1. 39-69-OPN-3

Discharges from the fire water system:

1. 39-98-OPN-5

Miscellaneous discharges:

1. 33-20-OPN-1	2. 33-23-OPN-1	3. 33-86-OPN-4
4. 33-114-OPN-3	5. 33-129-OPN-1	6. 39-6-OPN-1
7. 39-8-OPN-1	8. 39-57-OPN-1	9. 49-113-OPN-2
10. 49-115-OPN-2		

The following outfalls have storm water combined with non-storm water discharges, as defined in Forms 2D, Appendix 3:

1. 33-19-OPN-1 2. 33-114-OPN-1 3. 39-2-OPN-3

Recommended permitting and corrective actions are outlined in Tables 1 through 27 as well as in the above text. Corrective action should be performed as soon as practicable to minimize the chance of unpermitted discharge of pollutants.

TABLE 1: TA 33-19 DRAIN SUMMARY

OUTFALL NUMBER	ID NUMBER	ROOM ACTIVITY	ROOM NUMBER	RECOMMENDATIONS	EPA FORM PREPARED
33-19-OPN-1	1FD1	CORRIDOR		NO CHANGE	NO
SEPTIC TANK	1FD2	LAB	2	PLUGGED	
	1FD3	LADIES ROOM	8	NO CHANGE	
	1FD4	MEN'S ROOM	9	NO CHANGE	
	1FD5	EQUIP ROOM	10	NO CHANGE	
	1LV1	LADIES ROOM	8	NO CHANGE	
	1LV2	MEN'S ROOM	9	NO CHANGE	
	1LV3	MEN'S ROOM	9	NO CHANGE	
	RD1	ROOF		REPIPE	
	RD2	ROOF		REPIPE	
	RD3	ROOF		REPIPE	
	RD4	ROOF		REPIPE	
	1S1	LAB	4	NO CHANGE	
	1SH1	LOCKER ROOM	7	NO CHANGE	
	1SH2	LOCKER ROOM	7	NO CHANGE	
	1SH3	LADIES ROOM	8	NO CHANGE	
	1T1	LADIES ROOM	8	NO CHANGE	
	1T2	MEN'S ROOM	9	NO CHANGE	
	1T3	MEN'S ROOM	9	NO CHANGE	
	1UR1	MEN'S ROOM	9	NO CHANGE	
	1WD1	LAB	4	NO CHANGE	
	1WF1	CORRIDOR		NO CHANGE	

TABLE 2: TA 33-20 DRAIN SUMMARY

OUTFALL NUMBER	ID NUMBER	ROOM ACTIVITY	ROOM NUMBER	RECOMMENDATIONS	EPA FORM PREPARED
33-20-OPN-1	1FD1	WAREHOUSE	101	PLUG	NO
	1FD2	WAREHOUSE	101	PLUG	

TABLE 3: TA 33-23 DRAIN SUMMARY

OUTFALL NUMBER	ID NUMBER	ROOM ACTIVITY	ROOM NUMBER	RECOMMENDATIONS	EPA FORM PREPARED
33-23-OPN-1	1S1	WAREHOUSE	101	PLUG OUTLET	NO

TABLE 4: TA 33-39 DRAIN SUMMARY

OUTFALL NUMBER	ID NUMBER	ROOM ACTIVITY	ROOM NUMBER	RECOMMENDATIONS	EPA FORM PREPARED
33-39-OPN-1	1LV1	REST ROOM	4	NO CHANGE	NO
SEPTIC TANK	1S1	SHOP	1	REMOVE	
	1SH1	REST ROOM	4	NO CHANGE	
	1T1	REST ROOM	4	NO CHANGE	
	1UR1	REST ROOM	4	NO CHANGE	
	1WF1	SHOP	1	NO CHANGE	

TABLE 5: TA 33-86 DRAIN SUMMARY

OUTFALL NUMBER	ID NUMBER	ROOM ACTIVITY	ROOM NUMBER	RECOMMENDATIONS	EPA FORM PREPARED
33-86-OPN-1 04A147	1FD1	VAULT	9	COVERED	YES
	1FD2	VAULT	10	COVERED	
	1FD3	VAULT	10	COVERED	
	1FD4	LAB	11	COVERED	
	1S1	VAULT	10	REMOVE	
	1S2	LAB	11	REMOVE	
	1S3	LAB	11	REMOVE	
	1S4	LAB	11	REMOVE	
33-86-OPN-2 SEPTIC TANK	1FD5	EQUIP ROOM	6	NO CHANGE	NO
	1FD6	EQUIP ROOM	6	NO CHANGE	
	1FD7	MEN'S ROOM	5A	NO CHANGE	
	1LV1	LADIES ROOM	5	NO CHANGE	
	1LV2	MEN'S ROOM	5A	NO CHANGE	
	1S6	JAN CLOSET	4	NO CHANGE	
	1S7	LAB	3	NO CHANGE	
	1S8	LAB	1	NO CHANGE	
	1SH1	LADIES ROOM	5	NO CHANGE	
	1SH2	MEN'S ROOM	5A	NO CHANGE	
	1T1	LADIES ROOM	5	NO CHANGE	
	1T2	MEN'S ROOM	5A	NO CHANGE	
	1WF1	LAB	1	NO CHANGE	
33-86-OPN-3	RD1	ROOF		NO CHANGE	NO
33-86-OPN-4	1FD8	LAB	1	PLUG	NO
	1S6	LAB	6B	REMOVE	

TABLE 6: TA 33-113 DRAIN SUMMARY

OUTFALL NUMBER	ID NUMBER	ROOM ACTIVITY	RECOMMENDATIONS	EPA FORM PREPARED
33-113-OPN-1	RD1	ROOF	NO CHANGE	NO
33-113-OPN-2	1S1	JAN CLOSET	NO CHANGE	NO
SEPTIC TANK	1S2	SHOP	NO CHANGE	
	1SH1	REST ROOM	NO CHANGE	
	1T1	REST ROOM	NO CHANGE	
	1UR1	REST ROOM	NO CHANGE	
	1WF1	SHOP	NO CHANGE	
33-113-OPN-3	RD2	ROOF	NO CHANGE	NO
33-113-OPN-4	RD3	ROOF	NO CHANGE	NO
33-113-OPN-5	RD4	ROOF	NO CHANGE	NO
33-113-OPN-6		COMPR DRAIN	CONTAINERIZE	NO

TABLE 7: TA 33-114 DRAIN SUMMARY

OUTFALL NUMBER	ID NUMBER	ROOM ACTIVITY	ROOM NUMBER	RECOMMENDATIONS	EPA FORM PREPARED
33-114-OPN-1	1FD1	LAB	110	REPIPE TO OPN-2	YES
03A038	1FD2	LAB	108	REPIPE TO OPN-2	
	1FD3	EQUIP ROOM	127	REPIPE TO OPN-2	
	1FD4	EQUIP ROOM	127	REPIPE TO OPN-2	
	BFD1	EQUIP ROOM	B1	REPIPE TO OPN-2	
	RD1	ROOF		NEW OUTFALL	
	RD2	ROOF		NEW OUTFALL	
	RD3	ROOF		NEW OUTFALL	
	1S1	LAB	117	REPIPE TO OPN-2	
	1S2	LAB	117	REPIPE TO OPN-2	
	1S3	OFFICE	114	REPIPE TO OPN-2	
	1S5	LAB	110	REPIPE TO OPN-2	
	1S6	OFFICE	111	REPIPE TO OPN-2	
	1S7	LAB	110	REPIPE TO OPN-2	
	1S8	LAB	110	REPIPE TO OPN-2	
	1S9	LAB	110	REPIPE TO OPN-2	
	1S10	LAB	108	REPIPE TO OPN-2	
	1S11	LAB	108	REPIPE TO OPN-2	
	1S12	LAB	110	REPIPE TO OPN-2	
	1S13	LAB	108	REPIPE TO OPN-2	
	1S14	LAB	108	REPIPE TO OPN-2	
	1S15	LAB	108	REPIPE TO OPN-2	
	1S16	LAB	128	REPIPE TO OPN-2	
	1S17	LAB	128	REPIPE TO OPN-2	
	1S18	LAB	128	REPIPE TO OPN-2	
	1S19	LAB	107	REPIPE TO OPN-2	
	1S20	LAB	107	REPIPE TO OPN-2	
	1S21	LAB	107	REPIPE TO OPN-2	
	1S22	LAB	107	REPIPE TO OPN-2	
	1S23	LAB	105	REPIPE TO OPN-2	
	1S24	LAB	105	REPIPE TO OPN-2	
	1S25	LAB	105	REPIPE TO OPN-2	
	1S26	LAB	130	REPIPE TO OPN-2	

TABLE 7: TA 33-114 DRAIN SUMMARY

OUTFALL NUMBER	ID NUMBER	ROOM ACTIVITY	ROOM NUMBER	RECOMMENDATIONS	EPA FORM PREPARED
	1S27	LAB	130	REPIPE TO OPN-2	
	1S28	LAB	130	REPIPE TO OPN-2	
	1S29	LAB	130	REPIPE TO OPN-2	
	1S30	LAB	130	REPIPE TO OPN-2	
	1S31	LAB	130	REPIPE TO OPN-2	
	1S32	LAB	131	REPIPE TO OPN-2	
	1S33	CONFERENCE	104	REPIPE TO OPN-2	
33-114-OPN-2	1LV1	MEN'S ROOM	123	NO CHANGE	NO
SEPTIC TANK	1LV2	MEN'S ROOM	123	NO CHANGE	
	1LV3	LADIES ROOM	124	NO CHANGE	
	1T1	MEN'S ROOM	123	NO CHANGE	
	1T2	MEN'S ROOM	123	NO CHANGE	
	1T3	LADIES ROOM	124	NO CHANGE	
	1UR1	MEN'S ROOM	123	NO CHANGE	
	1UR2	MEN'S ROOM	123	NO CHANGE	
	1WF1	CORRIDOR	150	NO CHANGE	
33-114-OPN-3	1S4	DARK ROOM	126	PLUG	NO

TABLE 8: TA 33-129 DRAIN SUMMARY

OUTFALL NUMBER	ID NUMBER	ROOM ACTIVITY	ROOM NUMBER	RECOMMENDATIONS	EPA FORM PREPARED
33-129-OPN-1	1FD1	EQUIP ROOM		PLUG	NO
33-129-OPN-2		COMPR DRAIN		CONTAINERIZE	NO

TABLE 9: TA 33-178 DRAIN SUMMARY

OUTFALL NUMBER	ID NUMBER	ROOM ACTIVITY	ROOM NUMBER	RECOMMENDATIONS	EPA FORM PREPARED
33-178-OPN-1 SEPTIC TK	1FD1	UTILITY ROOM		NO CHANGE	NO
	1FS1	UTILITY ROOM		NO CHANGE	
	1LV1	REST ROOM		NO CHANGE	
	1S1	KITCHEN		NO CHANGE	
	1SH1	REST ROOM		NO CHANGE	
	1T1	REST ROOM		NO CHANGE	
	1WF1	KITCHEN		NO CHANGE	
33-178-OPN-2	RD1	ROOF		NO CHANGE	NO
33-178-OPN-3	RD2	ROOF		NO CHANGE	NO

TABLE 10: TA 39-2 DRAIN SUMMARY

OUTFALL NUMBER	ID NUMBER	ROOM ACTIVITY	ROOM NUMBER	RECOMMENDATIONS	EPA FORM PREPARED
39-2-OPN-1	1EQ1	OFFICE	37A	REPIPE	YES
	1S5	DARK ROOM	11	REPIPE	
39-2-OPN-2 SEPTIC TANK	1FD1	LADIES ROOM	19	NO CHANGE	NO
	1FD2	MEN'S ROOM	23	NO CHANGE	
	1FD5	SHOP	36	PLUG	
	1FD6	SHOP	36	PLUG	
	1LV1	LADIES ROOM	19	NO CHANGE	
	1LV2	MEN'S ROOM	23	NO CHANGE	
	1LV3	MEN'S ROOM	23	NO CHANGE	
	1S1	LAB	2	NO CHANGE	
	1S2	OFFICE	4	NO CHANGE	
	1S3	OFFICE	4A	NO CHANGE	
	1S4	LAB	8	NO CHANGE	
	1S6	JAN CLOSET	21	NO CHANGE	
	1S7	LUNCH ROOM	12	NO CHANGE	
	1S8	LAB	30	NO CHANGE	
	1S9	DARK ROOM	37A	REPIPE	
	1SH1	MEN'S ROOM	23	NO CHANGE	
	1T1	LADIES ROOM	19	NO CHANGE	
	1T2	MEN'S ROOM	23	NO CHANGE	
	1T3	MEN'S ROOM	23	NO CHANGE	
	1UR1	MEN'S ROOM	23	NO CHANGE	
	1WF1	CORRIDOR		NO CHANGE	
39-2-OPN-3	1FD3	EQUIP ROOM	25	REPIPE	NO
	1FD4	EQUIP ROOM	25	REPIPE	
	RD1	ROOF		NO CHANGE	
	RD2	ROOF		NO CHANGE	
	RD3	ROOF		NO CHANGE	
	RD4	ROOF		NO CHANGE	
	1SP1	EQUIP ROOM	25	REPIPE	

TABLE 11: TA 39-6 DRAIN SUMMARY

OUTFALL NUMBER	ID NUMBER	ROOM ACTIVITY	RECOMMENDATIONS	EPA FORM PREPARED
39-6-OPN-1	1FD1	CONTROL ROOM	PLUG	NO
39-6-OPN-2		COMPR DRAIN	CONTAINERIZE	NO

TABLE 12: TA 39-7 DRAIN SUMMARY

OUTFALL NUMBER	ID NUMBER	ROOM ACTIVITY	RECOMMENDATIONS	EPA FORM PREPARED
39-7-OPN-1	1FD1	CONTROL ROOM	PLUG	NO
39-7-OPN-2		COMPR DRAIN	CONTAINERIZE	NO

TABLE 13: TA 39-8 DRAIN SUMMARY

OUTFALL NUMBER	ID NUMBER	ROOM ACTIVITY	RECOMMENDATIONS	EPA FORM PREPARED
39-8-OPN-1	1FD1	CONTROL ROOM	PLUG	NO

TABLE 14: TA 39-57 DRAIN SUMMARY

OUTFALL NUMBER	ID NUMBER	ROOM ACTIVITY	RECOMMENDATIONS	EPA FORM PREPARED
39-57-OPN-1	1FD1	CONTROL ROOM	PLUG	NO
39-57-OPN-2		COMPR DRAIN	CONTAINERIZE	NO

TABLE 15: TA 39-62 DRAIN SUMMARY

OUTFALL NUMBER	ID NUMBER	ROOM ACTIVITY	RECOMMENDATIONS	EPA FORM PREPARED
39-62-OPN-1		BACK FLOW PREV	NO CHANGE	NO
39-62-OPN-2	1S1	STORAGE	NO CHANGE	NO
39-62-OPN-3		WATER HEATER	NO CHANGE	NO

TABLE 16: TA 39-69 DRAIN SUMMARY

OUTFALL NUMBER	ID NUMBER	ROOM ACTIVITY	RECOMMENDATIONS	EPA FORM PREPARED
39-69-OPN-1		COOLING WATER	NO CHANGE	YES
39-69-OPN-2		BACK FLOW PREV	NO CHANGE	NO
39-69-OPN-3		AIR DRIER	NO CHANGE	NO
39-69-OPN-4		AIR COMPRESSOR	NO CHANGE	NO
39-69-OPN-5		COOLING WATER	REPIPE TO OPN-1	YES

TABLE 17: TA 39-89 DRAIN SUMMARY

OUTFALL NUMBER	ID NUMBER	ROOM ACTIVITY	RECOMMENDATIONS	EPA FORM PREPARED
39-89-OPN-1		ROOF	NO CHANGE	NO
39-89-OPN-2		ROOF	NO CHANGE	NO
39-89-OPN-3	1S1	LAB	NO CHANGE	NO
	1S2	LAB	NO CHANGE	
	1S3	LAB	NO CHANGE	
39-89-OPN-4		LAB	NO CHANGE	YES
39-89-OPN-5		ROOF	NO CHANGE	NO
39-89-OPN-6		GAS VENT	NO CHANGE	NO
39-89-OPN-7		ROOF	NO CHANGE	NO
39-89-OPN-8		ROOF	NO CHANGE	NO
39-89-OPN-9		ROOF	NO CHANGE	NO

TABLE 18: TA 39-98 DRAIN SUMMARY

OUTFALL NUMBER	ID NUMBER	ROOM ACTIVITY	RECOMMENDATIONS	EPA FORM PREPARED
39-98-OPN-1		ROOF	NO CHANGE	NO
39-98-OPN-2		ROOF	NO CHANGE	NO
39-98-OPN-3		ROOF	NO CHANGE	NO
39-98-OPN-4	1FD1	SHOP	PLUG	NO
SEPTIC TANK	1FD2	SHOP	PLUG	
	1FD3	SHOP	PLUG	
	1FD4	SHOP	PLUG	
	1FD5	SHOP	PLUG	
	1FD6	SHOP	PLUG	
	1FD7	LADIES ROOM	NO CHANGE	
	1FD8	MENS ROOM	NO CHANGE	
	1LV1	LADIES ROOM	NO CHANGE	
	1LV2	MENS ROOM	NO CHANGE	
	1LV3	MENS ROOM	NO CHANGE	
	1S1	SHOP	NO CHANGE	
	1SH1	LADIES ROOM	NO CHANGE	
	1SH2	MENS ROOM	NO CHANGE	
	1SH3	MENS ROOM	NO CHANGE	
	1SH4	MENS ROOM	NO CHANGE	
	1T1	LADIES ROOM	NO CHANGE	
	1T2	MENS ROOM	NO CHANGE	
	1T3	MENS ROOM	NO CHANGE	
	1UR1	MENS ROOM	NO CHANGE	
	1WF1	SHOP	NO CHANGE	
	1WF2	SHOP	NO CHANGE	
39-98-OPN-5		FIRE WATER	NO CHANGE	NO
39-98-OPN-6		ROOF	NO CHANGE	NO
39-98-OPN-7		ROOF	NO CHANGE	NO

TABLE 19: TA 39-100 DRAIN SUMMARY

OUTFALL NUMBER	ID NUMBER	ROOM ACTIVITY	RECOMMENDATIONS	EPA FORM PREPARED
39-100-OPN-1 SEPTIC TANK	1LV1	REST ROOM	NO CHANGE	NO
	1LV2	REST ROOM	NO CHANGE	
	1S1	REST ROOM	NO CHANGE	
	1T1	REST ROOM	NO CHANGE	
	1T2	REST ROOM	NO CHANGE	
	1WF1	REST ROOM	NO CHANGE	
39-100-OPN-2		HOT WATER	NO CHANGE	NO

TABLE 20: TA 39-103 DRAIN SUMMARY

OUTFALL NUMBER	ID NUMBER	ROOM ACTIVITY	RECOMMENDATIONS	EPA FORM PREPARED
39-103-OPN-1 SEPTIC TANK	1S1	CONFERENCE	NO CHANGE	NO
	1WF1	CONFERENCE	NO CHANGE	
39-103-OPN-2		HOT WATER	NO CHANGE	NO

TABLE 21: TA 39-107 DRAIN SUMMARY

OUTFALL NUMBER	ID NUMBER	ROOM ACTIVITY	RECOMMENDATIONS	EPA FORM PREPARED
39-107-OPN-1 SEPTIC TANK	1LV1	LADIES ROOM	NO CHANGE	NO
	1LV2	MEN'S ROOM	NO CHANGE	
	1S1	JAN CLOSET	NO CHANGE	
	1S2	KITCHEN	NO CHANGE	
	1SH1	LADIES ROOM	NO CHANGE	
	1SH2	MEN'S ROOM	NO CHANGE	
	1T1	LADIES ROOM	NO CHANGE	
	1T2	MEN'S ROOM	NO CHANGE	

TABLE 22: TA 39-111 DRAIN SUMMARY

OUTFALL NUMBER	ID NUMBER	ROOM ACTIVITY	RECOMMENDATIONS	EPA FORM PREPARED
39-111-OPN-1		ROOF	NO CHANGE	NO
39-111-OPN-2		ROOF	NO CHANGE	NO
39-111-OPN-3		ROOF	NO CHANGE	NO
39-111-OPN-4 SEPTIC TANK	1FD1	EQUIP ROOM	NO CHANGE	NO
	1S1	SHOP	NO CHANGE	
	1S2	REST ROOM	NO CHANGE	
	1T1	REST ROOM	NO CHANGE	
39-111-OPN-5		ROOF	NO CHANGE	NO
39-111-OPN-6		WATER HEATER	NO CHANGE	NO
39-111-OPN-7		ROOF	NO CHANGE	NO
39-111-OPN-8		ROOF	NO CHANGE	NO

TABLE 23: TA 49-113 DRAIN SUMMARY

OUTFALL NUMBER	ID NUMBER	ROOM ACTIVITY	RECOMMENDATIONS	EPA FORM PREPARED
49-113-OPN-1 SEPTIC TANK	1FD1	EQUIP ROOM	NO CHANGE	NO
	1S1	KITCHEN	NO CHANGE	
	1LV1	REST ROOM	NO CHANGE	
	1T1	REST ROOM	NO CHANGE	
49-113-OPN-2	1HW1	WATER HEATER	NO CHANGE	NO

TABLE 24: TA 49-115 DRAIN SUMMARY

OUTFALL NUMBER	ID NUMBER	ROOM ACTIVITY	RECOMMENDATIONS	EPA FORM PREPARED
49-115-OPN-1 SEPTIC TANK	1FD1	KITCHEN	NO CHANGE	NO
	1FD2	KITCHEN	NO CHANGE	
	1LV1	LADIES ROOM	NO CHANGE	
	1LV2	MEN'S ROOM	NO CHANGE	
	1S1	KITCHEN	NO CHANGE	
	1S2	KITCHEN	NO CHANGE	
	1SH1	LADIES ROOM	NO CHANGE	
	1SH2	MEN'S ROOM	NO CHANGE	
	1SH3	MEN'S ROOM	NO CHANGE	
	1T1	LADIES ROOM	NO CHANGE	
	1T2	MEN'S ROOM	NO CHANGE	
	1UR1	MEN'S ROOM	NO CHANGE	
49-115-OPN-2	1HW1	WATER HEATER	NO CHANGE	NO
49-115-OPN-3	RD1	ROOF	NO CHANGE	NO
49-115-OPN-4	RD2	ROOF	NO CHANGE	NO
49-115-OPN-5	RD3	ROOF	NO CHANGE	NO
49-115-OPN-6	RD4	ROOF	NO CHANGE	NO

TABLE 25: TA 69-1 DRAIN SUMMARY

OUTFALL NUMBER	ID NUMBER	ROOM ACTIVITY	RECOMMENDATIONS	EPA FORM PREPARED
69-1-OPN-1 SEPTIC TANK	1LV1	REST ROOM	NO CHANGE	NO
	1T1	REST ROOM	NO CHANGE	
	1WF1	REST ROOM	NO CHANGE	

TABLE 26: TA 69-2 DRAIN SUMMARY

OUTFALL NUMBER	ID NUMBER	ROOM ACTIVITY	RECOMMENDATIONS	EPA FORM PREPARED
69-2-OPN-1 SEPTIC TANK	1LV1	LADIES ROOM	NO CHANGE	NO
	1LV2	MEN'S ROOM	NO CHANGE	
	1S1	KITCHEN	NO CHANGE	
	1S2	JAN CLOSET	NO CHANGE	
	1T1	LADIES ROOM	NO CHANGE	
	1T2	MEN'S ROOM	NO CHANGE	
	1UR1	MEN'S ROOM	NO CHANGE	
	1WF1	HALLWAY	NO CHANGE	

TABLE 27: TA 69-8 DRAIN SUMMARY

OUTFALL NUMBER	ID NUMBER	ROOM ACTIVITY	RECOMMENDATIONS	EPA FORM PREPARED
69-8-OPN-1 DAYLIGHT	1FD1	BFP BUILDING	NO CHANGE	NO
	1FD2	BFP BUILDING	NO CHANGE	

TABLE 28
SUMMARY OF ABBREVIATIONS

ABBREVIATION	MEANING
EQ	Equipment Drain
FD	Floor Drain
FS	Floor Sink
HW	Hot Water Heater
LV	Lavatory
RD	Roof Drain
S	Sink
SH	Shower
SP	Sump Pump
T	Toilet
UR	Urinal
WD	Waste Drain
WF	Water Fountain

TA	BLDG	OUTLET PIPING NUMBER	EPA OUTFALL #	DRAIN #	ROOM DESCRIPTION	FLOW RATE	PERIODICITY	SEASONAL	ROOM #	SOURCE TYPES
33	1	33-1			LABORATORY			no		NO SOURCE OF WATER
33	2	33-2			WAREHOUSE			no		NO DRAINS
33	16	33-16			GUN BUILDING			no		NO DRAINS
33	19	33-19-OPN-1		1FD1	CORRIDOR			no		SANITARY
33	19	33-19-OPN-1		1FD2	LAB			no	2	SANITARY
33	19	33-19-OPN-1		1FD3	LADIES REST ROOM			no	8	SANITARY
33	19	33-19-OPN-1		1FD4	MEN'S REST ROOM			no	9	SANITARY
33	19	33-19-OPN-1		1FD5	EQUIPMENT ROOM			no	10	
33	19	33-19-OPN-1		1LV1	LADIES REST ROOM			no	8	
33	19	33-19-OPN-1		1LV2	MEN'S REST ROOM			no	9	
33	19	33-19-OPN-1		1LV3	MEN'S REST ROOM			no	9	
33	19	33-19-OPN-1		1S1	LAB			no	4	
33	19	33-19-OPN-1		1SH1	LOCKER ROOM			no	7	
33	19	33-19-OPN-1		1SH2	LOCKER ROOM			no	7	
33	19	33-19-OPN-1		1SH3	LADIES REST ROOM			no	8	
33	19	33-19-OPN-1		1T1	LADIES REST ROOM			no	8	
33	19	33-19-OPN-1		1T2	MEN'S REST ROOM			no	9	
33	19	33-19-OPN-1		1T3	MEN'S REST ROOM			no	9	
33	19	33-19-OPN-1		1UR1	MEN'S REST ROOM			no	9	
33	19	33-19-OPN-1		1WD1	LAB			no	4	
33	19	33-19-OPN-1		1WF1	CORRIDOR			no		WATER FOUNTAIN
33	19	33-19-OPN-1		RD1	ROOF			no		RAIN
33	19	33-19-OPN-1		RD2	ROOF			no		RAIN
33	19	33-19-OPN-1		RD3	ROOF			no		RAIN
33	19	33-19-OPN-1		RD4	ROOF			no		RAIN
33	20	33-20-OPN-1		1FD1	WAREHOUSE			no		
33	20	33-20-OPN-1		1FD2	WAREHOUSE			no		
33	22	33-22			MAGAZINE			no		NO DRAINS
33	23	33-23-OPN-1		1S1	WAREHOUSE			no	101	
33	24	33-24			CONTROL BUILDING			no		NO SOURCE OF WATER
33	25	33-25			GUN BUILDING			no		NO DRAINS
33	26	33-26			X-UNIT CHAMBER			no		NO DRAINS
33	27	33-27			GUARD STATION			no		NO SOURCE OF WATER
33	28	33-28			WATER TANK			no		NO DRAINS
33	29	33-29			UG CHAMBER #3			no		NO DRAINS
33	36	33-36			MAGAZINE			no		NO DRAINS
33	37	33-37			MAGAZINE			no		NO DRAINS
33	39	33-39-OPN-1		1LV1	REST ROOM			no	4	

TA	BLDG	OUTLET PIPING NUMBER	EPA OUTFALL #	DRAIN #	ROOM DESCRIPTION	FLOW	RATE	PERIODICITY	SEASONAL	ROOM #	SOURCE TYPES
33	39	33-39-OPN-1		1S1	SHOP				no	1	
33	39	33-39-OPN-1		1SH1	REST ROOM				no	4	
33	39	33-39-OPN-1		1T1	REST ROOM				no	4	
33	39	33-39-OPN-1		1UR1	REST ROOM				no	4	
33	39	33-39-OPN-1		1WF1	SHOP				no	4	
33	40	33-40			SAW BUILDING				no		NO SOURCE OF WATER
33	70	33-70			UG CHAMBER #4				no		NO DRAINS
33	71	33-71			UG CHAMBER #5				no		NO DRAINS
33	86	33-86-OPN-1	04A147	1FD1	VAULT	0	GPM		no	9	NONE
33	86	33-86-OPN-1	04A147	1FD2	VAULT				no	10	NONE
33	86	33-86-OPN-1	04A147	1FD3	VAULT				no	10	NONE
33	86	33-86-OPN-1	04A147	1FD4	LAB				no	11	NONE
33	86	33-86-OPN-1	04A147	1S1	VAULT				no	10	
33	86	33-86-OPN-1	04A147	1S2	LAB				no	11	
33	86	33-86-OPN-1	04A147	1S3	LAB				no	11	
33	86	33-86-OPN-1	04A147	1S4	LAB				no	11	
33	86	33-86-OPN-2		1FD5	EQUIPMENT ROOM				no	6	
33	86	33-86-OPN-2		1FD6	EQUIPMENT ROOM				no	6	
33	86	33-86-OPN-2		1FD7	MEN'S REST ROOM				no	5A	
33	86	33-86-OPN-2		1LV1	LADIES REST ROOM				no	5	
33	86	33-86-OPN-2		1LV2	MEN'S REST ROOM				no	5A	
33	86	33-86-OPN-2		1S6	JANITOR'S CLOSET				no	4	
33	86	33-86-OPN-2		1S7	LAB				no	3	
33	86	33-86-OPN-2		1S8	LAB				no	1	
33	86	33-86-OPN-2		1SH1	LADIES REST ROOM				no	5	
33	86	33-86-OPN-2		1SH2	MEN'S REST ROOM				no	5A	
33	86	33-86-OPN-2		1T1	LADIES REST ROOM				no	5	
33	86	33-86-OPN-2		1T2	MEN'S REST ROOM				no	5A	
33	86	33-86-OPN-2		1WF1	LAB				no	1	
33	86	33-86-OPN-3		RD1	ROOF				no		
33	86	33-86-OPN-4		1FD8	LAB				no	1	
33	86	33-86-OPN-4		1S6	LAB				no	6B	
33	87	33-87			CONTROL BUILDING				no		NO SOURCE OF WATER
33	88	33-88			CABLE BUILDING				no		NO DRAINS
33	89	33-89			X-UNIT VAULT				no		NO SOURCE OF WATER
33	90	33-90			GUARD HOUSE				no		NO SOURCE OF WATER
33	91	33-91			HOSE HOUSE				no		NO DRAINS
33	95	33-95			TRANSFORMER VAULT				no		NO DRAINS

TA	BLDG	OUTLET PIPING NUMBER	EPA OUTFALL #	DRAIN #	ROOM DESCRIPTION	FLOW RATE	PERIODICITY	SEASONAL	ROOM #	SOURCE TYPES
33	113	33-113-OPN-1		RD1	ROOF			no		
33	113	33-113-OPN-2		1S1	JANITOR'S CLOSET			no		SANITARY SOURCES
33	113	33-113-OPN-2		1S2	SHOP			no		SANITARY SOURCES
33	113	33-113-OPN-2		1T1	REST ROOM			no		SANITARY SOURCES
33	113	33-113-OPN-2		1UR1	REST ROOM			no		SANITARY SOURCES
33	113	33-113-OPN-2		1WF1	SHOP			no		SANITARY SOURCES
33	113	33-113-OPN-3		RD2	ROOF			no		RAIN
33	113	33-113-OPN-4		RD3	ROOF			no		RAIN
33	113	33-113-OPN-5		RD4	ROOF			no		RAIN
33	113	33-113-OPN-6			AIR COMPRESSOR DRAIN			no		
33	114	33-114-OPN-1	03A038	1FD1	LAB			no	110	
33	114	33-114-OPN-1	03A038	1FD2	LAB			no	108	
33	114	33-114-OPN-1	03A038	1FD3	EQUIPMENT ROOM			no	127	
33	114	33-114-OPN-1	03A038	1FD4	EQUIPMENT ROOM			no	127	
33	114	33-114-OPN-1	03A038	1S1	LAB			no	117	
33	114	33-114-OPN-1	03A038	1S10	LAB			no	108	
33	114	33-114-OPN-1	03A038	1S11	LAB			no	108	
33	114	33-114-OPN-1	03A038	1S12	LAB			no	110	
33	114	33-114-OPN-1	03A038	1S13	LAB			no	108	
33	114	33-114-OPN-1	03A038	1S14	LAB			no	108	
33	114	33-114-OPN-1	03A038	1S15	LAB			no	108	
33	114	33-114-OPN-1	03A038	1S16	LAB			no	128	
33	114	33-114-OPN-1	03A038	1S17	LAB			no	128	
33	114	33-114-OPN-1	03A038	1S18	LAB			no	128	
33	114	33-114-OPN-1	03A038	1S19	LAB			no	107	
33	114	33-114-OPN-1	03A038	1S2	LAB			no	117	
33	114	33-114-OPN-1	03A038	1S20	LAB			no	107	
33	114	33-114-OPN-1	03A038	1S21	LAB			no	107	
33	114	33-114-OPN-1	03A038	1S22	LAB			no	107	
33	114	33-114-OPN-1	03A038	1S23	LAB			no	105	
33	114	33-114-OPN-1	03A038	1S24	LAB			no	105	
33	114	33-114-OPN-1	03A038	1S25	LAB			no	130	
33	114	33-114-OPN-1	03A038	1S26	LAB			no	130	
33	114	33-114-OPN-1	03A038	1S27	LAB			no	130	
33	114	33-114-OPN-1	03A038	1S28	LAB			no	130	
33	114	33-114-OPN-1	03A038	1S29	LAB			no	130	
33	114	33-114-OPN-1	03A038	1S3	LAB			no	114	
33	114	33-114-OPN-1	03A038	1S30	LAB			no	130	

TA	BLDG	OUTLET PIPING NUMBER	EPA OUTFALL #	DRAIN #	ROOM DESCRIPTION	FLOW	RATE	PERIODICITY	SEASONAL	ROOM #	SOURCE TYPES
33	114	33-114-OPN-1	03A038	1S31	LAB				no	130	
33	114	33-114-OPN-1	03A038	1S32	LAB				no	131	
33	114	33-114-OPN-1	03A038	1S33	LAB				no	104	
33	114	33-114-OPN-1	03A038	1S5	LAB				no	110	
33	114	33-114-OPN-1	03A038	1S6	OFFICE				no	111	
33	114	33-114-OPN-1	03A038	1S7	LAB				no	110	
33	114	33-114-OPN-1	03A038	1S8	LAB				no	110	
33	114	33-114-OPN-1	03A038	1S9	LAB				no	110	
33	114	33-114-OPN-1	03A038	BFD1	EQUIPMENT ROOM	8	GPD		no	B1	
33	114	33-114-OPN-1	03A038	RD1	ROOF				no		RAIN
33	114	33-114-OPN-1	03A038	RD2	ROOF				no		RAIN
33	114	33-114-OPN-1	03A038	RD3	ROOF				no		RAIN
33	114	33-114-OPN-2		1LV1	MEN'S REST ROOM				no	123	SANITARY FACILITIES
33	114	33-114-OPN-2		1LV2	MEN'S REST ROOM				no	123	SANITARY FACILITIES
33	114	33-114-OPN-2		1LV3	LADIES REST ROOM				no	124	SANITARY FACILITIES
33	114	33-114-OPN-2		1T1	MENS REST ROOM				no	123	SANITARY FACILITIES
33	114	33-114-OPN-2		1T2	MENS REST ROOM				no	123	SANITARY FACILITIES
33	114	33-114-OPN-2		1T3	LADIES REST ROOM				no	124	SANITARY FACILITIES
33	114	33-114-OPN-2		1UR1	MENS REST ROOM				no	123	SANITARY FACILITIES
33	114	33-114-OPN-2		1UR2	MENS REST ROOM				no	123	SANITARY FACILITIES
33	114	33-114-OPN-2		1WF1	CORRIDOR				no	150	SANITARY FACILITIES
33	114	33-114-OPN-3		1S4	DARK ROOM				no	126	PHOTO PROCESSING
33	129	33-129-OPN-1		1FD1	EQUIPMENT ROOM				no		
33	129	33-129-OPN-2			AIR COMPRESSOR DRAIN				no		
33	151	33-151			BUNKER				no		NO DRAINS
33	163	33-163			OFFICE TRAILER				no		NO DRAINS
33	164	33-164			OFFICE TRAILER				no		NO DRAINS
33	165	33-165			OFFICE TRAILER				no		NO DRAINS
33	167	33-167			LAB TRAILER				no		NO DRAINS
33	168	33-168			TRANSPORTABLE OFFICE				no		NO DRAINS
33	173	33-173			OFFICE TRAILER				no		NO DRAINS
33	175	33-175			VLBA ANTENNA				no		NO DRAINS
33	177	33-177			LAB TRAILER				no		NO DRAINS
33	178	33-178-OPN-1		1FD1	UTILITY ROOM				no		
33	178	33-178-OPN-1		1FS1	UTILITY ROOM				no		
33	178	33-178-OPN-1		1LV1	REST ROOM				no		
33	178	33-178-OPN-1		1S1	KITCHEN				no		
33	178	33-178-OPN-1		1SH1	REST ROOM				no		

TA	BLDG	OUTLET PIPING NUMBER	EPA OUTFALL #	DRAIN #	ROOM DESCRIPTION	FLOW RATE	PERIODICITY	SEASONAL	ROOM #	SOURCE TYPES
33	178	33-178-OPN-1		1T1	REST ROOM			no		
33	178	33-178-OPN-1		1WF1	KITCHEN			no		
33	178	33-178-OPN-2		RD1	ROOF			no		RAIN
33	178	33-178-OPN-3		RD2	ROOF			no		RAIN
33	192	33-192			TRANSMITTER ANTENNA BUILDING			no		NO DRAINS
33	196	33-196			LAB TRAILER			no		NO DRAINS
33	199	33-199			TRANSPORTAINER			no		NO DRAINS
33	200	33-200			PUMP HOUSE			no		NO DRAINS
33	201	33-201			TRANSPORTAINER			no		NO DRAINS
33	202	33-202			TRANSPORTAINER			no		NO DRAINS
33	203	33-203			ANTENNA			no		NO DRAINS
33	204	33-204			GUARD HOUSE			no		NO DRAINS
33	205	33-205			TRAILER			no		NO DRAINS
33	207	33-207			SEMI-TRAILER			no		NO DRAINS
33	208	33-208			CONCRETE BLOCK BUILDING			no		NO DRAINS
33	209	33-209			TRAILER			no		NO DRAINS
33	210	33-210			EXPERIMENTAL TRAILER			no		NO DRAINS
33	211	33-211			STORAGE TRAILER			no		NO DRAINS
33	212	33-212			STORAGE TRAILER			no		NO DRAINS
33	213	33-213			STORAGE TRAILER			no		NO DRAINS
33	214	33-214			STORAGE TRAILER			no		NO DRAINS
33	215	33-215			STORAGE TRAILER			no		NO DRAINS
33	216	33-216			TRANSPORTAINER			no		NO DRAINS
33	217	33-217			SHED			no		NO DRAINS
33	227	33-227			STORAGE TRAILER			no		NO DRAINS
33	228	33-228			STORAGE TRAILER			no		NO DRAINS
33	229	33-229			STORAGE TRAILER			no		NO DRAINS
33	255	33-255			STORAGE TRAILER			no		NO DRAINS

TA	BLDG	OUTLET PIPING NUMBER	EPA OUTFALL #	DRAIN #	ROOM DESCRIPTION	FLOW	RATE	PERIODICITY	SEASONAL	ROOM #	SOURCE TYPES
39	2	39-2-OPN-1	UNPERMITTED	1EQ1	OFFICE	4	GPM		no	37A	X-RAY MACHINE
39	2	39-2-OPN-1	UNPERMITTED	1S5	DARK ROOM	1.5	GPM		no	11	PHOTO PROCESSING
39	2	39-2-OPN-2		1FD1	LADIES REST ROOM				no	19	SANITARY FACILITIES
39	2	39-2-OPN-2		1FD2	MEN'S REST ROOM				no	23	SANITARY FACILITIES
39	2	39-2-OPN-2		1FD5	SHOP				no	36	
39	2	39-2-OPN-2		1FD6	SHOP				no	36	
39	2	39-2-OPN-2		1LV1	LADIES ROOM				no	19	SANITARY FACILITIES
39	2	39-2-OPN-2		1LV2	MEN'S ROOM				no	23	SANITARY FACILITIES
39	2	39-2-OPN-2		1LV3	MEN'S ROOM				no	23	SANITARY FACILITIES
39	2	39-2-OPN-2		1S1	LAB				no	2	SANITARY FACILITIES
39	2	39-2-OPN-2		1S2	OFFICE				no	4	SANITARY FACILITIES
39	2	39-2-OPN-2		1S3	OFFICE				no	4A	SANITARY FACILITIES
39	2	39-2-OPN-2		1S4	LAB				no	8	SANITARY FACILITIES
39	2	39-2-OPN-2		1S6	JANITOR'S CLOSET				no	21	SANITARY FACILITIES
39	2	39-2-OPN-2		1S7	LUNCH ROOM				no	12	SANITARY FACILITIES
39	2	39-2-OPN-2		1S8	LAB				no	30	SANITARY FACILITIES
39	2	39-2-OPN-2	UNPERMITTED	1S9	LAB	1.5	GPM		no	37A	PHOTO PROCESSING
39	2	39-2-OPN-2		1SH1	MEN'S REST ROOM				no	23	SANITARY FACILITIES
39	2	39-2-OPN-2		1T1	LADIES REST ROOM				no	19	SANITARY FACILITIES
39	2	39-2-OPN-2		1T2	MEN'S REST ROOM				no	23	SANITARY FACILITIES
39	2	39-2-OPN-2		1T3	MEN'S REST ROOM				no	23	SANITARY FACILITIES
39	2	39-2-OPN-2		1UR1	MEN'S REST ROOM				no	23	SANITARY FACILITIES
39	2	39-2-OPN-2		1WF1	CORRIDOR				no		WATER FOUNTAIN
39	2	39-2-OPN-3		1FD3	EQIUIPMENT ROOM				no	25	
39	2	39-2-OPN-3		1FD4	EQIUIPMENT ROOM				no	25	
39	2	39-2-OPN-3		1SP1	EQUIPMENT ROOM				no	25	
39	2	39-2-OPN-3		RD1	ROOF				no		RAIN
39	2	39-2-OPN-3		RD2	ROOF				no		RAIN
39	2	39-2-OPN-3		RD3	ROOF				no		RAIN
39	2	39-2-OPN-3		RD4	ROOF				no		RAIN
39	3	39-3			MAIN MAGAZINE				no		NO DRAINS
39	4	39-4			TRIM MAGAZINE				no		NO DRAINS
39	5	39-5			READY MAGAZINE				no		NO DRAINS
39	6	39-6-OPN-1		1FD1	CONTROL ROOM				no		
39	6	39-6-OPN-2			AIR COMPRESSOR DRAIN				no		
39	7	39-7-OPN-1		1FD1	CONTROL ROOM				no		
39	7	39-7-OPN-2			AIR COMPRESSOR DRAIN				no		
39	8	39-8-OPN-1		1FD1	CONTROL ROOM				no		

TA	BLDG	OUTLET PIPING NUMBER	EPA OUTFALL #	DRAIN #	ROOM DESCRIPTION	FLOW	RATE	PERIODICITY	SEASONAL	ROOM #	SOURCE TYPES
39	9	39-9			HOSE HOUSE				no		NO DRAINS
39	10	39-10			HOSE HOUSE				no		NO DRAINS
39	54	39-54			MAGAZINE				no		NO DRAINS
39	54	39-54			MAGAZINE				no		NO DRAINS
39	56	39-56			GUN BUILDING				no		NO DRAINS
39	57	39-57-OPN-1			AIR COMPRESSOR ROOM				no		
39	57	39-57-OPN-1		1FD1	CONTROL ROOM				no		
39	62	39-62-OPN-1			BACK FLOW PREVENTER				no		
39	62	39-62-OPN-2		1S1	STORAGE				no		
39	62	39-62-OPN-3			WATER HEATER				no		
39	63	39-63			EQUIPMENT SHELTER				no		NO DRAINS
39	64	39-64			EQUIPMENT SHELTER				no		NO DRAINS
39	66	39-66			BARRICADE				no		NO DRAINS
39	67	39-67			CAPACITOR BANK ENCLOSURE				no		NO DRAINS
39	68	39-68			STORAGE BUILDING				no		NO DRAINS
39	69	39-69-OPN-1	04A141		COOLING WATER	3	GPM		no		
39	69	39-69-OPN-2			BACK FLOW PREVENTER				no		
39	69	39-69-OPN-3			AIR DRIER				no		
39	69	39-69-OPN-4			AIR COMPRESSOR DRAIN				no		
39	69	39-69-OPN-5			COOLING WATER				no		
39	77	39-77			MAGAZINE				no		NO DRAINS
39	88	39-88			FIRING CHAMBER				no		NO DRAINS
39	89	39-89-OPN-1			ROOF				no		
39	89	39-89-OPN-2			ROOF				no		
39	89	39-89-OPN-3		1S1	LAB				no		
39	89	39-89-OPN-3		1S2	LAB				no		
39	89	39-89-OPN-3		1S3	LAB				no		
39	89	39-89-OPN-4	04A156		LAB	4.6	GPM		no		NON-CONTACT COOLING
39	89	39-89-OPN-5			ROOF				no		
39	89	39-89-OPN-6			LAB				no		GAS VENT
39	89	39-89-OPN-7			ROOF				no		
39	89	39-89-OPN-8			ROOF				no		
39	89	39-89-OPN-9			ROOF				no		
39	95	39-95			CAPACITOR BANK BUNKER				no		NO DRAINS
39	96	39-96			UTILITY TUNNEL				no		NO DRAINS
39	97	39-97			TRAILER BAY				no		NO DRAINS
39	98	39-98-OPN-1			ROOF				no		RAIN
39	98	39-98-OPN-2			ROOF				no		RAIN

TA	BLDG	OUTLET PIPING NUMBER	EPA OUTFALL #	DRAIN #	ROOM DESCRIPTION	FLOW RATE	PERIODICITY	SEASONAL	ROOM #	SOURCE TYPES
39	98	39-98-OPN-3			ROOF			no		RAIN
39	98	39-98-OPN-4		1FD1	SHOP			no		
39	98	39-98-OPN-4		1FD2	SHOP			no		
39	98	39-98-OPN-4		1FD3	SHOP			no		
39	98	39-98-OPN-4		1FD4	SHOP			no		
39	98	39-98-OPN-4		1FD5	SHOP			no		
39	98	39-98-OPN-4		1FD6	SHOP			no		
39	98	39-98-OPN-4		1FD7	LADIES REST ROOM			no		SANITARY FACILITIES
39	98	39-98-OPN-4		1FD8	MEN'S REST ROOM			no		SANITARY FACILITIES
39	98	39-98-OPN-4		1LV1	LADIES REST ROOM			no		SANITARY FACILITIES
39	98	39-98-OPN-4		1LV2	MEN'S REST ROOM			no		SANITARY FACILITIES
39	98	39-98-OPN-4		1LV3	MEN'S REST ROOM			no		SANITARY FACILITIES
39	98	39-98-OPN-4		1S1	SHOP			no		
39	98	39-98-OPN-4		1SH1	LADIES REST ROOM			no		SANITARY FACILITIES
39	98	39-98-OPN-4		1SH2	MEN'S REST ROOM			no		SANITARY FACILITIES
39	98	39-98-OPN-4		1SH3	MEN'S REST ROOM			no		SANITARY FACILITIES
39	98	39-98-OPN-4		1SH4	MEN'S REST ROOM			no		SANITARY FACILITIES
39	98	39-98-OPN-4		1T1	LADIES REST ROOM			no		SANITARY FACILITIES
39	98	39-98-OPN-4		1T2	MEN'S REST ROOM			no		SANITARY FACILITIES
39	98	39-98-OPN-4		1T3	MEN'S REST ROOM			no		SANITARY FACILITIES
39	98	39-98-OPN-4		1UR1	MEN'S REST ROOM			no		SANITARY FACILITIES
39	98	39-98-OPN-4		1WF1	SHOP			no		WATER FOUNTAIN
39	98	39-98-OPN-4		1WF2	SHOP			no		WATER FOUNTAIN
39	98	39-98-OPN-5			FIRE WATER DRAIN			no		
39	98	39-98-OPN-6			ROOF			no		RAIN
39	98	39-98-OPN-7			ROOF			no		RAIN
39	100	39-100-OPN-1		1LV1	REST ROOM			no		SANITARY FACILITIES
39	100	39-100-OPN-1		1LV2	REST ROOM			no		SANITARY FACILITIES
39	100	39-100-OPN-1		1S1	REST ROOM			no		SANITARY FACILITIES
39	100	39-100-OPN-1		1T1	REST ROOM			no		SANITARY FACILITIES
39	100	39-100-OPN-1		1T2	REST ROOM			no		SANITARY FACILITIES
39	100	39-100-OPN-1		1WF1	REST ROOM			no		WATER FOUNTAIN
39	100	39-100-OPN-2			HOT WATER HEATER			no		
39	101	39-101			TRAILER LABORATORY			no		NO DRAINS
39	103	39-103-OPN-1		1S1	CONFERENCE ROOM			no		
39	103	39-103-OPN-1		1WF1	CONFERENCE ROOM			no		
39	103	39-103-OPN-2			HOT WATER HEATER			no		
39	107	39-107-OPN-1		1LV1	LADIES REST ROOM			no		SANITARY FACILITIES

TA	BLDG	OUTLET PIPING NUMBER	EPA OUTFALL #	DRAIN #	ROOM DESCRIPTION	FLOW RATE	PERIODICITY	SEASONAL	ROOM #	SOURCE TYPES
39	107	39-107-OPN-1		1LV2	MEN'S REST ROOM			no		SANITARY FACILITIES
39	107	39-107-OPN-1		1S1	JANITOR'S CLOSET			no		SANITARY FACILITIES
39	107	39-107-OPN-1		1S2	KITCHEN			no		SANITARY FACILITIES
39	107	39-107-OPN-1		1SH1	LADIES REST ROOM			no		SANITARY FACILITIES
39	107	39-107-OPN-1		1SH2	MEN'S REST ROOM			no		SANITARY FACILITIES
39	107	39-107-OPN-1		1T1	LADIES REST ROOM			no		SANITARY FACILITIES
39	107	39-107-OPN-1		1T2	MEN'S REST ROOM			no		SANITARY FACILITIES
39	111	39-111-OPN-1			ROOF			no		RAIN
39	111	39-111-OPN-2			ROOF			no		RAIN
39	111	39-111-OPN-3			ROOF			no		RAIN
39	111	39-111-OPN-4		1FD1	EQUIPMENT ROOM			no		
39	111	39-111-OPN-4		1S1	SHOP			no		
39	111	39-111-OPN-4		1S2	REST ROOM			no		
39	111	39-111-OPN-4		1T1	REST ROOM			no		
39	111	39-111-OPN-5			ROOF			no		RAIN
39	111	39-111-OPN-6			HOT WATER HEATER			no		
39	111	39-111-OPN-7			ROOF			no		RAIN
39	111	39-111-OPN-8			ROOF			no		RAIN
39	115	39-115			TRANPORTAINER			no		NO DRAINS
39	116	39-116			TRANPORTAINER			no		NO DRAINS
39	119	39-119			TRANPORTAINER			no		NO DRAINS
39	121	39-121			TRANPORTAINER			no		NO DRAINS
39	122	39-122			TRANPORTAINER			no		NO DRAINS
39	123	39-123			TRANPORTAINER			no		NO DRAINS
39	125	39-125			TRANPORTAINER			no		NO DRAINS
39	134	39-134			INSTRUMENT TRAILER			no		NO DRAINS
39	137	39-137			SHED			no		NO DRAINS
39	138	39-138			SOURCE STORAGE			no		NO DRAINS
39	139	39-139			SHED			no		NO DRAINS
39	141	39-141			CONTAMINATED OIL STORAGE			no		NO DRAINS
39	142	39-142			DRUM STORAGE			no		NO DRAINS
39	143	39-143			EXPERIMENTAL BUILDING			no		NO DRAINS
39	144	39-144			SHED			no		NO DRAINS
39	145	39-145			WOOD SHED			no		NO DRAINS
39	146	39-146			PASSAGEWAY			no		NO DRAINS
39	147	39-147			TRANSPORTAINER			no		NO DRAINS
39	148	39-148			TRANSPORTAINER			no		NO DRAINS
39	150	39-150			TRANSPORTAINER			no		NO DRAINS

TA	BLDG	OUTLET PIPING NUMBER	EPA OUTFALL #	DRAIN #	ROOM DESCRIPTION	FLOW	RATE	PERIODICITY	SEASONAL	ROOM #	SOURCE TYPES
39	151	39-151			EXPERIMENTAL TRAILER				no		NO DRAINS
39	152	39-152			STORAGE TRAILER				no		NO DRAINS

TA	BLDG	OUTLET PIPING NUMBER	EPA OUTFALL #	DRAIN #	ROOM DESCRIPTION	FLOW RATE	PERIODICITY	SEASONAL	ROOM #	SOURCE TYPES
49	23	49-23			BOTTLE HOUSE			no		NO DRAINS
49	101	49-101			TEST WELL HOUSE			no		NO DRAINS
49	113	49-113-OPN-1		1FD1	EQUIPMENT ROOM			no		
49	113	49-113-OPN-1		1LV1	REST ROOM			no		
49	113	49-113-OPN-1		1S1	KITCHEN			no		
49	113	49-113-OPN-1		1T1	REST ROOM			no		
49	113	49-113-OPN-2		1HW1	HOT WATER HEATER			no		
49	114	49-114			EXPLOSIVES MAGAZINE			no		NO SOURCE
49	115	49-115-OPN-1		1FD1	KITCHEN			no		
49	115	49-115-OPN-1		1FD2	KITCHEN			no		
49	115	49-115-OPN-1		1LV1	LADIES REST ROOM			no		
49	115	49-115-OPN-1		1LV2	MEN'S REST ROOM			no		
49	115	49-115-OPN-1		1S1	KITCHEN			no		
49	115	49-115-OPN-1		1S2	KITCHEN			no		
49	115	49-115-OPN-1		1SH1	LADIES REST ROOM			no		
49	115	49-115-OPN-1		1SH2	MEN'S REST ROOM			no		
49	115	49-115-OPN-1		1SH3	MEN'S REST ROOM			no		
49	115	49-115-OPN-1		1T1	LADIES REST ROOM			no		
49	115	49-115-OPN-1		1T2	MEN'S REST ROOM			no		
49	115	49-115-OPN-1		1UR1	MEN'S REST ROOM			no		
49	115	49-115-OPN-2		1HW1	HOT WATER HEATER			no		
49	115	49-115-OPN-3		RD1	ROOF			no		
49	115	49-115-OPN-4		RD2	ROOF			no		
49	115	49-115-OPN-5		RD3	ROOF			no		
49	115	49-115-OPN-6		RD4	ROOF			no		
49	121	49-121			CABLE BUILDING			no		NO DRAINS
49	122	49-122			STORAGE TRAILER			no		NO DRAINS
49	123	49-123			ANTENNA			no		NO DRAINS
49	124	49-124			SHED			no		NO DRAINS
49	130	49-130			STORAGE TRAILER			no		NO DRAINS
49	131	49-131			STORAGE TRAILER			no		NO DRAINS
49	132	49-132			STORAGE TRAILER			no		NO DRAINS
49	133	49-133			STORAGE TRAILER			no		NO DRAINS
49	135	49-135			FRAME BUILDING			no		NO DRAINS

TA	BLDG	OUTLET PIPING NUMBER	EPA OUTFALL #	DRAIN #	ROOM DESCRIPTION	FLOW RATE	PERIODICITY	SEASONAL	ROOM #	SOURCE TYPES
69	1	69-1-OPN-1		1LV1	REST ROOM			no		SANITARY F
69	1	69-1-OPN-1		1T1	REST ROOM			no		SANITARY F
69	1	69-1-OPN-1		1WF1	REST ROOM			no		WATER FOUN
69	2	69-2-OPN-1		1LV1	LADIES REST ROOM			no		SANITARY F
69	2	69-2-OPN-1		1LV2	MEN'S REST ROOM			no		SANITARY F
69	2	69-2-OPN-1		1S1	KITCHEN			no		
69	2	69-2-OPN-1		1S2	JANITOR'S CLOSET			no		
69	2	69-2-OPN-1		1T1	LADIES REST ROOM			no		SANITARY F
69	2	69-2-OPN-1		1T2	MEN'S REST ROOM			no		SANITARY F
69	2	69-2-OPN-1		1UR1	MEN'S REST ROOM			no		SANITARY F
69	2	69-2-OPN-1		1WF1	HALLWAY			no		WATER FOUN
69	3	69-3			INCINERATOR BUILDING			no		NO DRAINS
69	4	69-4			GUARD BUILDING			no		NO DRAINS
69	5	69-5			OFFICE TRAILER			no		NO DRAINS
69	6	69-6			WATER TANK			no		NO DRAINS
69	7	69-7			WATER TANK			no		NO DRAINS
69	8	69-2-OPN-1		1FD1	BACK FLOW PREVENTER BUILDING			no		BACK FLOW
69	8	69-2-OPN-1		1FD2	BACK FLOW PREVENTER BUILDING			no		BACK FLOW

Please print or type in the unshaded areas only

EPA I.D. NUMBER (copy from Item 1 of Form 1)
NM 0890010515

Form Approved
OMB No. 2040-0086
Approval expires 7-31-88

FORM 2C NPDES

EPA

U.S. ENVIRONMENTAL PROTECTION AGENCY
APPLICATION FOR PERMIT TO DISCHARGE WASTEWATER
EXISTING MANUFACTURING, COMMERCIAL, MINING AND SILVICULTURAL OPERATIONS
Consolidated Permits Program

I. OUTFALL LOCATION

For each outfall, list the latitude and longitude of its location to the nearest 15 seconds and the name of the receiving water.

A. OUTFALL NUMBER (list)	B. LATITUDE			C. LONGITUDE			D. RECEIVING WATER (name)
	1. DEG.	2. MIN.	3. SEC.	1. DEG.	2. MIN.	3. SEC.	
03A038	35	46	60	106	15	18	CHAQUEHUI CANYON

II. FLOWS, SOURCES OF POLLUTION, AND TREATMENT TECHNOLOGIES

A. Attach a line drawing showing the water flow through the facility. Indicate sources of intake water, operations contributing wastewater to the effluent, and treatment units labeled to correspond to the more detailed descriptions in Item B. Construct a water balance on the line drawing by showing average flows between intakes, operations, treatment units, and outfalls. If a water balance cannot be determined *(e.g., for certain mining activities)*, provide a pictorial description of the nature and amount of any sources of water and any collection or treatment measures.

B. For each outfall, provide a description of: (1) All operations contributing wastewater to the effluent, including process wastewater, sanitary wastewater, cooling water, and storm water runoff; (2) The average flow contributed by each operation; and (3) The treatment received by the wastewater. Continue on additional sheets if necessary.

1. OUTFALL NO. (list)	2. OPERATION(S) CONTRIBUTING FLOW		3. TREATMENT		
	a. OPERATION (list)	b. AVERAGE FLOW (include units)	a. DESCRIPTION	b. LIST CODES FROM TABLE 2C-1	
038	CHILLER BLOWDOWN	8 GPD	NONE		
	TA-33-114				

OFFICIAL USE ONLY (effluent guidelines sub-categories)

CONTINUED FROM THE FRONT

C. Except for storm runoff, leaks, or spills, are any of the discharges described in Items II-A or B intermittent or seasonal?

☐ YES *(complete the following table)* ☒ NO *(go to Section III)*

1. OUTFALL NUMBER *(list)*	2. OPERATION(s) CONTRIBUTING FLOW *(list)*	3. FREQUENCY		4. FLOW				
		a. DAYS PER WEEK *(specify average)*	b. MONTHS PER YEAR *(specify average)*	a. FLOW RATE *(in mgd)*		b. TOTAL VOLUME *(specify with units)*		c. DURATION *(in days)*
				1. LONG TERM AVERAGE	2. MAXIMUM DAILY	1. LONG TERM AVERAGE	2. MAXIMUM DAILY	

III. PRODUCTION

A. Does an effluent guideline limitation promulgated by EPA under Section 304 of the Clean Water Act apply to your facility?

☐ YES *(complete Item III-B)* ☒ NO *(to to Section IV)*

B. Are the limitations in the applicable effluent guideline expressed in terms of production *(or other measure of operation)*?

☐ YES *(complete Item III-C)* ☐ NO *(go to Section IV)*

C. If you answered "yes" to Item III-B, list the quantity which represents an actual measurement of your level of production, expressed in the terms and units used in the applicable effluent guideline, and indicate the affected outfalls.

1. AVERAGE DAILY PRODUCTION			2. AFFECTED OUTFALLS *(list outfall numbers)*
a. QUANTITY PER DAY	b. UNITS OF MEASURE	c. OPERATION, PRODUCT, MATERIAL, ETC. *(specify)*	

IV. IMPROVEMENTS

A. Are you now required by any Federal, State or local authority to meet any implementation schedule for the construction, upgrading or operation of wastewater treatment equipment or practices or any other environmental programs which may affect the discharges described in this application? This includes, but is not limited to, permit conditions, administrative or enforcement orders, enforcement compliance schedule letters, stipulations, court orders, and grant or loan conditions.

☐ YES *(complete the following table)* ☒ NO *(go to Item IV-B)*

1. IDENTIFICATION OF CONDITION, AGREEMENT, ETC.	2. AFFECTED OUTFALLS		3. BRIEF DESCRIPTION OF PROJECT	4. FINAL COMPLIANCE DATE	
	a. NO.	b. SOURCE OF DISCHARGE		a. REQUIRED	b. PROJECTED

B. OPTIONAL: You may attach additional sheets describing any additional water pollution control programs *(or other environmental projects which may affect your discharges)* you now have underway or which you plan. Indicate whether each program is now underway or planned, and indicate your actual or planned schedules for construction. ☐ MARK "X" IF DESCRIPTION OF ADDITIONAL CONTROL PROGRAMS IS ATTACHED

 CONTINUE ON PAGE 3

EPA I.D. NUMBER (copy from Item 1 of Form 1) NM 0890010515

Form Approved
OMB No 2040-0086
Approval expires 7-31-88

V. INTAKE AND EFFLUENT CHARACTERISTICS

A, B, & C: See instructions before proceeding – Complete one set of tables for each outfall – Annotate the outfall number in the space provided.
NOTE: Tables V-A, V-B, and V-C are included on separate sheets numbered V-1 through V-9.

D. Use the space below to list any of the pollutants listed in Table 2c-3 of the instructions, which you know or have reason to believe is discharged or may be discharged from any outfall. For every pollutant you list, briefly describe the reasons you believe it to be present and report any analytical data in your possession.

1. POLLUTANT	2. SOURCE	1. POLLUTANT	2. SOURCE
NA			

VI. POTENTIAL DISCHARGES NOT COVERED BY ANALYSIS

Is any pollutant listed in Item V-C a substance or a component of a substance which you currently use or manufacture as an intermediate or final product or byproduct?

☐ YES (list all such pollutants below) X ☐ NO (go to Item VI-B)

CONTINUED FROM THE FRONT

VII. BIOLOGICAL TOXICITY TESTING DATA

Do you have any knowledge or reason to believe that any biological test for acute or chronic toxicity has been made on any of your discharges or on a receiving water in relation to your discharge within the last 3 years?

☐ YES *(identify the test(s) and describe their purposes below)* ☒ NO *(go to Section VIII)*

VIII. CONTRACT ANALYSIS INFORMATION

Were any of the analyses reported in Item V performed by a contract laboratory or consulting firm?

☐ YES *(list the name, address, and telephone number of, and pollutants analyzed by, each such laboratory or firm below)* ☒ NO *(go to Section IX)*

A. NAME	B. ADDRESS	C. TELEPHONE *(area code & no.)*	D. POLLUTANTS ANALYZED *(list)*

IX. CERTIFICATION

I certify under penalty of law that this document and all attachments were prepared under my direction or supervision in accordance with a system designed to assure that qualified personnel properly gather and evaluate the information submitted. Based on my inquiry of the person or persons who manage the system or those persons directly responsible for gathering the information, the information submitted is, to the best of my knowledge and belief, true, accurate, and complete. I am aware that there are significant penalties for submitting false information, including the possibility of fine and imprisonment for knowing violations.

A. NAME & OFFICIAL TITLE *(type or print)*	B. PHONE NO. *(area code & no.)*
C. SIGNATURE	D. DATE SIGNED

PLEASE PRINT OR TYPE IN THE UNSHADED AREAS ONLY. You may report some or all of this information on separate sheets *(use the same format)* instead of completing these pages. SEE INSTRUCTIONS.

EPA I.D. NUMBER *(copy from Item 1 of Form 1)*: NM 0890010515

Form Approved
OMB No. 2040-0086
Approval expires 7-31-88

V. INTAKE AND EFFLUENT CHARACTERISTICS *(continued from page 3 of Form 2-C)*

OUTFALL NO. 03A-038

PART A - You must provide the results of at least one analysis for every pollutant in this table. Complete one table for each outfall. See instructions for additional details.

1. POLLUTANT	2. EFFLUENT a. MAXIMUM DAILY VALUE (1) CONCENTRATION	(2) MASS	b. MAXIMUM 30 DAY VALUE *(if available)* (1) CONCENTRATION	(2) MASS	c. LONG TERM AVRG. VALUE *(if available)* (1) CONCENTRATION	(2) MASS	d. NO. OF ANALYSES	3. UNITS *(specify if blank)* a. CONCENTRATION	b. MASS	4. INTAKE *(optional)* a. LONG TERM AVERAGE VALUE (1) CONCENTRATION	(2) MASS	b. NO. OF ANALYSES
a. Biochemical Oxygen Demand *(BOD)*	2.0	0.1						mg/L	g/d			
b. Chemical Oxygen Demand *(COD)*	42.0	1.3						mg/L	g/d			
c. Total Organic Carbon *(TOC)*	7.4	0.2						mg/L	g/d			
d. Total Suspended Solids *(TSS)*	7	0.2						mg/L	g/d			
e. Ammonia *(as N)*	< 0.01	< 0.0						mg/L	g/d			
f. Flow	VALUE 8		VALUE		VALUE			gpd		VALUE		
g. Temperature *(winter)*	VALUE 39.9 C		VALUE		VALUE			°C		VALUE		
h. Temperature *(summer)*	VALUE N.A.		VALUE		VALUE			°C		VALUE		
i. pH	MINIMUM 6.8	MAXIMUM 8.8	MINIMUM 6.0	MAXIMUM 9.0				STANDARD UNITS				

PART B - Mark "X" in column 2-a for each pollutant you know or have reason to believe is present. Mark "X" in column 2-b for each pollutant you believe to be absent. If you mark column 2a for any pollutant which is limited either directly, or indirectly but expressly, in an effluent limitations guideline, you must provide the results of at least one analysis for that pollutant. For other pollutants for which you mark column 2a, you must provide quantitative data or an explanation of their presence in your discharge. Complete one table for each outfall. See the instructions for additional details and requirements.

1. POLLUTANT AND CAS NO. *(if available)*	2. MARK 'X' a. BELIEVED PRESENT	b. BELIEVED ABSENT	3. EFFLUENT a. MAXIMUM DAILY VALUE (1) CONCENTRATION	(2) MASS	b. MAXIMUM 30 DAY VALUE *(if available)* (1) CONCENTRATION	(2) MASS	c. LONG TERM AVRG. VALUE *(if available)* (1) CONCENTRATION	(2) MASS	d. NO. OF ANALYSES	4. UNITS a. CONCENTRATION	b. MASS	5. INTAKE *(optional)* a. LONG TERM AVERAGE VALUE (1) CONCENTRATION	(2) MASS	b. NO. OF ANALYSES
a. Bromide (24959-67-9)	X		3.24	98.1						mg/L	mg/d			
b. Chlorine, Total Residual		X	0.00							mg/L	mg/d			
c. Color	X		10							units				
d. Fecal Coliform		X												
e. Fluoride (16984-48-8)	X		0.52	15.7						mg/L	mg/d			
f. Nitrate-Nitrite *(as N)*	X		1.13	34.2						mg/L	mg/d			

1. POLLUTANT AND CAS NO. (if available)	2. MARK 'X' a. BELIEVED PRESENT	b. BELIEVED ABSENT	3. EFFLUENT a. MAXIMUM DAILY VALUE (1) CONCENTRATION	(2) MASS	b. MAXIMUM 30 DAY VALUE (if available) (1) CONCENTRATION	(2) MASS	c. LONG TERM AVRG. VALUE (if available) (1) CONCENTRATION	(2) MASS	d. NO. OF ANALYSES	4. UNITS a. CONCENTRATION	b. MASS	5. INTAKE (optional) a. LONG TERM AVERAGE VALUE (1) CONCENTRATION	(2) MASS	b. NO. OF ANALYSES
g. Nitrogen, Total Organic (as N)	X		2.3	69.6						mg/L	mg/d			
h. Oil and Grease		X	< 24	< 726.7						mg/L	mg/d			
i. Phosphorus (as P), Total (7723-14-0)	X		0.07	2.1						mg/L	mg/d			
j. Radioactivity														
(1) Alpha, Total	X		14	423.9						pCi/L	pCi/d			
(2) Beta, Total	X		6.6	199.8						pCi/L	pCi/d			
(3) Radium, Total		X												
(4) Radium 226, Total	X		0.07	2.1						pCi/L	pCi/d			
k. Sulfate (as SO_4) (14808-79-8)	X									mg/L	mg/d			
l. Sulfide (as S)	X			3						mg/L	mg/d			
m. Sulfite (as SO_3) (14265-45-3)	X		18.8	569.3						mg/L	mg/d			
n. Surfactants	X		0.11	3.3						mg/L	mg/d			
o. Aluminum, Total (7429-90-5)	X		0.06	1.8						mg/L	mg/d			
p. Barium, Total (7440-39-3)	X		0.11	3.3						mg/L	mg/d			
q. Boron, Total (7440-42-8)	X		0.33	10						mg/L	mg/d			
r. Cobalt, Total (7440-48-4)	X		0.07	2.1						mg/L	mg/d			
s. Iron, Total (7439-89-6)	X		1.1	33.3						mg/L	mg/d			
t. Magnesium, Total (7439-95-4)	X		5.8	175.6						mg/L	mg/d			
u. Molybdenum, Total (7439-98-7)	X		1.7	51.5						mg/L	mg/d			
v. Manganese, Total (7439-96-5)	X		0.05	1.5						mg/L	mg/d			
w. Tin, Total (7440-31-5)		X	< 0.05	< 1.5						mg/L	mg/d			
x. Titanium, Total (7440-32-6)		X	< 0.004	< 0.1						mg/L	mg/d			

CONTINUE ON PAGE V-[illegible]

EPA I.D. NUMBER (copy from Item 1 of Form 1)	OUTFALL NUMBER
NM 0890010515	03A-038

Form Approved.
OMB No. 2040-0086
Approval expires 7-31-88

CONTINUED FROM PAGE 3 OF FORM 2-C

PART C - If you are a primary industry and this outfall contains process wastewater, refer to Table 2c-2 in the instructions to determine which of the GC/MS fractions you must test for. Mark "X" in column 2-a for all such GC/MS fractions that apply to your industry and for ALL toxic metals, cyanides, and total phenols. If you are not required to mark column 2-a *(secondary industries, nonprocess wastewater outfalls, and nonrequired GC/MS fractions)*, mark "X" in column 2-b for each pollutant you know or have reason to believe is present. Mark "X" in column 2-c for each pollutant you believe is absent. If you mark column 2a for any pollutant, you must provide the results of at least one analysis for that pollutant. If you mark column 2b for any pollutant, you must provide the results of at least one analysis for that pollutant if you know or have reason to believe it will be discharged in concentrations of 10 ppb or greater. If you mark column 2b for acrolein, acrylonitrile, 2,4 dinitrophenol, or 2-methyl-4, 6 dinitrophenol, you must provide the results of at least one analysis for each of these pollutants which you know or have reason to believe that you discharge in concentrations of 100 ppb or greater. Otherwise, for pollutants for which you mark column 2b, you must either submit at least one analysis or briefly describe the reasons the pollutant is expected to be discharged. Note that there are 7 pages to this part; please review each carefully. Complete one table *(all 7 pages)* for each outfall. See instructions for additional details and requirements.

1. POLLUTANT AND CAS NUMBER (if available)	2. MARK 'X'			3. EFFLUENT							4. UNITS		5. INTAKE (optional)		
	a. TESTING REQUIRED	b. BELIEVED PRESENT	c. BELIEVED ABSENT	a. MAXIMUM DAILY VALUE (1) CONCENTRATION	a. MAXIMUM DAILY VALUE (2) MASS	b. MAXIMUM 30 DAY VALUE (if available) (1) CONCENTRATION	b. MAXIMUM 30 DAY VALUE (if available) (2) MASS	c. LONG TERM AVRG. VALUE (if available) (1) CONCENTRATION	c. LONG TERM AVRG. VALUE (if available) (2) MASS	d. NO. OF ANALYSES	a. CONCENTRATION	b. MASS	a. LONG TERM AVERAGE VALUE (1) CONCENTRATION	a. LONG TERM AVERAGE VALUE (2) MASS	b. NO. OF ANALYSES
METALS, CYANIDE, AND TOTAL PHENOLS															
1M. Antimony, Total (7440-36-0)			X	< 0.05	< 1.5						mg/L	mg/d			
2M. Arsenic, Total (7440-38-2)		X		0.04	1.2						mg/L	mg/d			
3M. Beryllium, Total, 7440-41-7)			X	< 0.1	< 3.0						mg/L	mg/d			
4M. Cadmium, Total (7440-43-9)		X		0.004	0.1						mg/L	mg/d			
5M. Chromium, Total (7440-47-3)		X		0.26	2.1						mg/L	mg/d			
6M. Copper, Total (7440-50-8)		X		0.1	3.0						mg/L	mg/d			
7M. Lead, Total (7439-92-1)		X		0.05	1.5						mg/L	mg/d			
8M. Mercury, Total (7439-97-6)			X	< .0002	< 0.0						mg/L	mg/d			
9M. Nickel, Total (7440-02-0)		X		0.28	8.5						mg/L	mg/d			
10M. Selenium, Total (7782-49-2)			X	< 0.001	< 0.0						mg/L	mg/d			
11M. Silver, Total (7440-22-4)			X	< 0.01	< 0.3						mg/L	mg/d			
12M. Thallium, Total (7440-28-0)		X		0.51	15.4						mg/L	mg/d			
13M. Zinc, Total (7440-66-6)		X		0.071	2.1						mg/L	mg/d			
14M. Cyanide, Total (57-12-5)		X		0.033	1						mg/L	mg/d			
15M. Phenols, Total			X	< 0.01	< 0.3						mg/L	mg/d			
DIOXIN															
2,3,7,8-Tetra chlorodibenzo-P-Dioxin (1764-01-6)			X	DESCRIBE RESULTS											

CONTINUE ON REVERSE

CONTINUED FROM THE FRONT

03A-038

1. POLLUTANT AND CAS NUMBER (if available)	2. MARK 'X' a. TESTING REQUIRED	b. BELIEVED PRESENT	c. BELIEVED ABSENT	3. EFFLUENT a. MAXIMUM DAILY VALUE (1) CONCENTRATION	(2) MASS	b. MAXIMUM 30 DAY VALUE (if available) (1) CONCENTRATION	(2) MASS	c. LONG TERM AVRG. VALUE (if available) (1) CONCENTRATION	(2) MASS	d. NO. OF ANALYSES	4. UNITS a. CONCENTRATION	b. MASS	5. INTAKE (optional) a. LONG TERM AVERAGE VALUE (1) CONCENTRATION	(2) MASS	b. NO. ANALYSES
GC/MS FRACTION – VOLATILE COMPOUNDS															
1V. Acrolein (107-02-8)			X												
2V. Acrylonitrile (107-13-1)			X												
3V. Benzene (71-43-2)			X	< 0.005	< 0.2						mg/L	mg/d			
4V. Bis (*Chloromethyl*) Ether (542-88-1)			X												
5V. Bromoform (75-25-2)			X	< 0.005	< 0.2						mg/L	mg/d			
6V. Carbon Tetrachloride (56-23-5)			X	< 0.005	< 0.2						mg/L	mg/d			
7V. Chlorobenzene (108-90-7)			X	< 0.005	< 0.2						mg/L	mg/d			
8V. Chlorodibromomethane (124-48-1)			X	< 0.005	< 0.2						mg/L	mg/d			
9V. Chloroethane (75-00-3)			X	< 0.01	< 0.3						mg/L	mg/d			
10V. 2-Chloroethylvinyl Ether (110-75-8)			X												
11V. Chloroform (67-66-3)			X	< 0.005	< 0.2						mg/L	mg/d			
12V. Dichlorobromomethane (75-27-4)			X	< 0.005	< 0.2						mg/L	mg/d			
13V. Dichlorodifluoromethane (75-71-8)			X												
14V. 1,1-Dichloroethane (75-34-3)			X	< 0.005	< 0.2						mg/L	mg/d			
15V. 1,2-Dichloroethane (107-06-2)			X	< 0.005	< 0.2						mg/L	mg/d			
16V. 1,1-Dichloroethylene (75-35-4)			X	< 0.005	< 0.2						mg/L	mg/d			
17V. 1,2-Dichloropropane (78-87-5)			X	< 0.005	< 0.2						mg/L	mg/d			
18V. 1,3-Dichloropropylene (542-75-6)			X	< 0.005	< 0.2						mg/L	mg/d			
19V. Ethylbenzene (100-41-4)			X	< 0.005	< 0.2						mg/L	mg/d			
20V. Methyl Bromide (74-83-9)			X	< 0.01	< 0.3						mg/L	mg/d			
21V. Methyl Chloride (74-87-3)			X	< 0.01	< 0.3						mg/L	mg/d			

CONTINUE ON PAGE

Form Approved.
OMB [illegible] 0-00[illegible]
Approval expires 7-31-88

PA[illegible] NUMBE[illegible] (Copy fr[illegible] m 1 [illegible] n 1) | ALL[illegible] BER

NM 0890010515 | 03A-038

CONTINUED FROM PAGE V-4

1. POLLUTANT AND CAS NUMBER (if available)	2. MARK "X" a. TEST REQUIRED BY PERMIT	b. BELIEVED PRESENT	c. BELIEVED ABSENT	3. EFFLUENT a. MAXIMUM DAILY VALUE (1) CONCENTRATION	(2) MASS	b. MAXIMUM 30 DAY VALUE (if available) (1) CONCENTRATION	(2) MASS	c. LONG TERM AVRG. VALUE (if available) (1) CONCENTRATION	(2) MASS	d. NO. OF ANALYSES	4. UNITS a. CONCENTRATION	b. MASS	5. INTAKE (optional) a. LONG TERM AVERAGE VALUE (1) CONCENTRATION	(2) MASS	b. NO. OF ANALYSES
GC/MS FRACTION – VOLATILE COMPOUNDS (continued)															
22V. Methylene Chloride (75-09-2)			X	< 0.005	< 0.2						mg/L	mg/d			
23V. 1,1,2,2-Tetrachloroethane (79-34-5)			X	< 0.005	< 0.2						mg/L	mg/d			
24V. Tetrachloroethylene (127-18-4)			X	< 0.005	< 0.2						mg/L	mg/d			
25V. Toluene (108-88-3)			X	< 0.005	< 0.2						mg/L	mg/d			
26V. 1,2-Trans-Dichloroethylene (156-60-5)			X	< 0.005	< 0.2						mg/L	mg/d			
27V. 1,1,1-Trichloroethane (71-55-6)			X	< 0.005	< 0.2						mg/L	mg/d			
28V. 1,1,2-Trichloroethane (79-00-5)			X	< 0.005	< 0.2						mg/L	mg/d			
29V. Trichloroethylene (79-01-6)			X	< 0.005	< 0.2						mg/L	mg/d			
30V. Trichlorofluoromethane (75-69-4)			X	< 0.005	< 0.2						mg/L	mg/d			
31V. Vinyl Chloride (75-01-4)			X	< 0.01	< 0.3						mg/L	mg/d			
GC/MS FRACTION – ACID COMPOUNDS															
1A. 2-Chlorophenol (95-57-8)			X	< 0.01	< 0.3						mg/L	mg/d			
2A. 2,4-Dichlorophenol (120-83-2)			X	< 0.01	< 0.3						mg/L	mg/d			
3A. 2,4-Dimethylphenol (105-67-9)			X	< 0.01	< 0.3						mg/L	mg/d			
4A. 4,6-Dinitro-O-Cresol (534-52-1)			X	< 0.01	< 0.3						mg/L	mg/d			
5A. 2,4-Dinitrophenol (51-28-5)			X	< 0.01	< 0.3						mg/L	mg/d			
6A. 2-Nitrophenol (88-75-5)			X	< 0.01	< 0.3						mg/L	mg/d			
7A. 4-Nitrophenol (100-02-7)			X	< 0.01	< 0.3						mg/L	mg/d			
8A. P-Chloro-M-Cresol (59-50-7)			X	< 0.01	< 0.3						mg/L	mg/d			
9A. Pentachlorophenol (87-86-5)			X	< 0.01	< 0.3						mg/L	mg/d			
10A. Phenol (108-95-2)			X	< 0.01	< 0.3						mg/L	mg/d			
11A. 2,4,6-Trichlorophenol (88-06-2)															

CONTINUED FROM THE FRONT

1. POLLUTANT AND CAS NUMBER (if available)	2. MARK "X" a. TEST INCLUDED	b. BELIEVED PRESENT	c. BELIEVED ABSENT	3. EFFLUENT a. MAXIMUM DAILY VALUE (1) CONCENTRATION	(2) MASS	b. MAXIMUM 30 DAY VALUE (if available) (1) CONCENTRATION	(2) MASS	c. LONG TERM AVRG. VALUE (if available) (1) CONCENTRATION	(2) MASS	d. NO. OF ANALYSES	4. UNITS a. CONCENTRATION	b. MASS	5. INTAKE (optional) a. LONG TERM AVERAGE VALUE (1) CONCENTRATION	(2) MASS	b. NO. OF ANALYSES
GC/MS FRACTION - BASE/NEUTRAL COMPOUNDS															
1B. Acenaphthene (83-32-9)			X	< 0.01	< 0.3						mg/L	mg/d			
2B. Acenaphtylene (208-96-8)			X	< 0.01	< 0.3						mg/L	mg/d			
3B. Anthracene (120-12-7)			X	< 0.01	< 0.3						mg/L	mg/d			
4B. Benzidine (92-87-5)			X	< 0.01	< 0.3						mg/L	mg/d			
5B. Benzo *(a)* Anthracene (56-55-3)			X	< 0.01	< 0.3						mg/L	mg/d			
6B. Benzo *(a)* Pyrene (50-32-8)			X	< 0.01	< 0.3						mg/L	mg/d			
7B. 3,4 Benzo-fluoranthene (205-99-2)			X	< 0.01	< 0.3						mg/L	mg/d			
8B. Benzo *(ghi)* Perylene (191-24-2)			X	< 0.01	< 0.3						mg/L	mg/d			
9B. Benzo *(k)* Fluoranthene (207-08-9)			X	< 0.01	< 0.3						mg/L	mg/d			
10B. Bis *(2-Chloro-ethoxy)* Methane (111-91-1)			X	< 0.01	< 0.3						mg/L	mg/d			
11B. Bis *(2-Chloro-ethyl)* Ether (111-44-4)			X	< 0.01	< 0.3						mg/L	mg/d			
12B. Bis *(2-Chloroiso-propyl)* Ether (102-60-1)			X	< 0.01	< 0.3						mg/L	mg/d			
13B. Bis *(2-Ethyl-hexyl)* Phthalate (117-81-7)			X	< 0.01	< 0.3						mg/L	mg/d			
14B. 4-Bromo-phenyl Phenyl Ether (101-55-3)			X	< 0.01	< 0.3						mg/L	mg/d			
15B. Butyl Benzyl Phthalate (85-68-7)			X	< 0.01	< 0.3						mg/L	mg/d			
16B. 2-Chloro-naphthalene (91-58-7)			X	< 0.01	< 0.3						mg/L	mg/d			
17B. 4-Chloro-phenyl Phenyl Ether (7005-72-3)			X	< 0.01	< 0.3						mg/L	mg/d			
18B. Chrysene (218-01-9)			X	< 0.01	< 0.3						mg/L	mg/d			
19B. Dibenzo *(a,h)* Anthracene (53-70-3)			X	< 0.01	< 0.3						mg/L	mg/d			
20B. 1,2-Dichloro-benzene (95-50-1)			X	< 0.01	< 0.3						mg/L	mg/d			
21B. 1,3-Dichloro-benzene (541-73-1)			X	< 0.01	< 0.3						mg/L	mg/d			

EPA I.D. NUMBER (copy from Item 1 of Form 1): Nm 0890010515

OUTFALL NUMBER: 03A-038

Form ed.
OMB No. 2040-0086
Approval expires 7-31-88

CONTINUED FROM PAGE V 6

1. POLLUTANT AND CAS NUMBER (if available)	2. MARK 'X' a. TEST INCLUDED	b. BELIEVED PRESENT	c. BELIEVED ABSENT	3. EFFLUENT a. MAXIMUM DAILY VALUE (1) CONCENTRATION	(2) MASS	b. MAXIMUM 30 DAY VALUE (if available) (1) CONCENTRATION	(2) MASS	c. LONG TERM AVRG. VALUE (if available) (1) CONCENTRATION	(2) MASS	d. NO. OF ANALYSES	4. UNITS a. CONCENTRATION	b. MASS	5. INTAKE (optional) a. LONG TERM AVERAGE VALUE (1) CONCENTRATION	(2) MASS	b. NO. OF ANALYSES
GC/MS FRACTION -- BASE/NEUTRAL COMPOUNDS (continued)															
22B. 1,4 Dichlorobenzene (106-46-7)			X	< 0.01	< 0.3						mg/L	mg/d			
23B. 3,3' Dichlorobenzidine (91-94-1)			X	< 0.01	< 0.3						mg/L	mg/d			
24B. Diethyl Phthalate (84-66-2)			X	< 0.01	< 0.3						mg/L	mg/d			
25B. Dimethyl Phthalate (131-11-3)			X	< 0.01	< 0.3						mg/L	mg/d			
26B. Di-N-Butyl Phthalate (84-74-2)			X	< 0.01	< 0.3						mg/L	mg/d			
27B. 2,4 Dinitrotoluene (121-14-2)			X	< 0.01	< 0.3						mg/L	mg/d			
28B. 2,6 Dinitrotoluene (606-20-2)			X	< 0.01	< 0.3						mg/L	mg/d			
29B. Di-N-Octyl Phthalate (117-84-0)			X	< 0.01	< 0.3						mg/L	mg/d			
30B. 1,2-Diphenylhydrazine (as Azobenzene) (122-66-7)			X	< 0.01	< 0.3						mg/L	mg/d			
31B. Fluoranthene (206-44-0)			X	< 0.01	< 0.3						mg/L	mg/d			
32B. Fluorene (86-73-7)			X	< 0.01	< 0.3						mg/L	mg/d			
33B. Hexachlorobenzene (118-74-1)			X	< 0.01	< 0.3						mg/L	mg/d			
34B. Hexachlorobutadiene (87-68-3)			X	< 0.01	< 0.3						mg/L	mg/d			
35B. Hexachlorocyclopentadiene (77-47-4)			X	< 0.01	< 0.3						mg/L	mg/d			
36B. Hexachloroethane (67-72-1)			X	< 0.01	< 0.3						mg/L	mg/d			
37B. Indeno (1,2,3-cd) Pyrene (193-39-5)			X	< 0.01	< 0.3						mg/L	mg/d			
38B. Isophorone (78-59-1)			X	< 0.01	< 0.3						mg/L	mg/d			
39B. Naphthalene (91-20-3)			X	< 0.01	< 0.3						mg/L	mg/d			
40B. Nitrobenzene (98-95-3)			X	< 0.01	< 0.3						mg/L	mg/d			
41B. N-Nitrosodimethylamine (62-75-9)			X	< 0.01	< 0.3						mg/L	mg/d			
42B. N-Nitrosodi-N-Propylamine (621-64-7)															

CONTINUED FROM THE FRONT

1. POLLUTANT AND CAS NUMBER (if available)	2. MARK "X" a. TESTING REQUIRED	b. BELIEVED PRESENT	c. BELIEVED ABSENT	3. EFFLUENT a. MAXIMUM DAILY VALUE (1) CONCENTRATION	(2) MASS	b. MAXIMUM 30 DAY VALUE (if available) (1) CONCENTRATION	(2) MASS	c. LONG TERM AVRG. VALUE (if available) (1) CONCENTRATION	(2) MASS	d. NO. OF ANALYSES	4. UNITS a. CONCENTRATION	b. MASS	5. INTAKE (optional) a. LONG TERM AVERAGE VALUE (1) CONCENTRATION	(2) MASS	b. NO. OF ANALYSES
GC/MS FRACTION – BASE/NEUTRAL COMPOUNDS (continued)															
43B. N-Nitrosodiphenylamine (86-30-6)			X	< 0.01	< 0.3						mg/L	mg/d			
44B. Phenanthrene (85-01-8)			X	< 0.01	< 0.3						mg/L	mg/d			
45B. Pyrene (129-00-0)			X	< 0.01	< 0.3						mg/L	mg/d			
46B. 1,2,4-Trichlorobenzene (120-82-1)			X	< 0.01	< 0.3						mg/L	mg/d			
GC/MS FRACTION – PESTICIDES															
1P. Aldrin (309-00-2)			X	< .00006	< 0.0						mg/L	mg/d			
2P. α-BHC (319-84-6)			X	< .00004	< 0.0						mg/L	mg/d			
3P. β-BHC (319-85-7)			X	< .0001	< 0.0						mg/L	mg/d			
4P. γ-BHC (58-89-9)			X	< .00003	< 0.0						mg/L	mg/d			
5P. δ-BHC (319-86-8)			X	< .00012	< 0.0						mg/L	mg/d			
6P. Chlordane (57-74-9)			X	< .00025	< 0.0						mg/L	mg/d			
7P. 4,4'-DDT (50-29-3)			X	< .00006	< 0.0						mg/L	mg/d			
8P. 4,4'-DDE (72-55-9)			X	< .00008	< 0.0						mg/L	mg/d			
9P. 4,4'-DDD (72-54-8)			X	< .00008	< 0.0						mg/L	mg/d			
10P. Dieldrin (60-57-1)			X	< .00008	< 0.0						mg/L	mg/d			
11P. α-Endosulfan (115-29-7)			X	< .00005	< 0.0						mg/L	mg/d			
12P. β-Endosulfan (115-29-7)			X	< .00008	< 0.0						mg/L	mg/d			
13P. Endosulfan Sulfate (1031-07-8)			X	< .00009	< 0.0						mg/L	mg/d			
14P. Endrin (72-20-8)			X	< .00006	< 0.0						mg/L	mg/d			
15P. Endrin Aldehyde (7421-93-4)			X	< .00062	< 0.0						mg/L	mg/d			
16P. Heptachlor (76-44-8)			X	< .00006	< 0.0						mg/L	mg/d			

CONTINUE ON PAGE

Form Approved
OMB No. 2040-0086
Approval expires 7-31-88

EPA I.D. NUMBER (copy from Item 1 of Form 1)	OUTFALL NUMBER
Nm 0890010515	03A-038

CONTINUED FROM PAGE V-8

1. POLLUTANT AND CAS NUMBER (if available)	2. MARK 'X' a. TESTING REQUIRED	b. BELIEVED PRESENT	c. BELIEVED ABSENT	3. EFFLUENT a. MAXIMUM DAILY VALUE (1) CONCENTRATION	(2) MASS	b. MAXIMUM 30 DAY VALUE (if available) (1) CONCENTRATION	(2) MASS	c. LONG TERM AVRG. VALUE (if available) (1) CONCENTRATION	(2) MASS	d. NO. OF ANALYSES	4. UNITS a. CONCENTRATION	b. MASS	5. INTAKE (optional) a. LONG TERM AVERAGE VALUE (1) CONCENTRATION	(2) MASS	b. NO. OF ANALYSES
GC/MS FRACTION – PESTICIDES (continued)															
17P. Heptachlor Epoxide (1024-57-3)			X	< .00008	< 0.0						mg/L	mg/d			
18P. PCB-1242 (53469-21-9)			X	< .00071	< 0.0						mg/L	mg/d			
19P. PCB-1254 (11097-69-1)			X	< .00071	< 0.0						mg/L	mg/d			
20P. PCB-1221 (11104-28-2)			X												
21P. PCB-1232 (11141-16-5)			X												
22P. PCB-1248 (12672-29-6)			X												
23P. PCB-1260 (11096-82-5)			X	< .00071	< 0.0						mg/L	mg/d			
24P. PCB-1016 (12674-11-2)			X												
25P. Toxaphene (8001-35-2)			X	< .0025	< 0.1						mg/L	mg/d			

SCHEMATIC OF WATER FLOW

OUTFALL 03A038

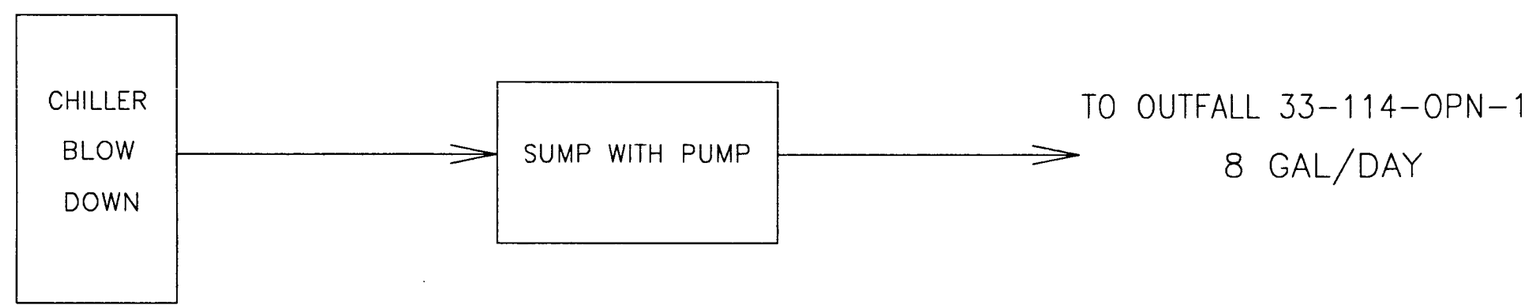

Please print or type in the unshaded areas only.

EPA I.D. NUMBER (copy from Item 1 of Form 1) NM 0890010515

Form Approved. OMB No. 2040-0086. Approval expires 7-31-88

FORM 2C NPDES

EPA

U.S. ENVIRONMENTAL PROTECTION AGENCY
APPLICATION FOR PERMIT TO DISCHARGE WASTEWATER
EXISTING MANUFACTURING, COMMERCIAL, MINING AND SILVICULTURAL OPERATIONS
Consolidated Permits Program

I. OUTFALL LOCATION

For each outfall, list the latitude and longitude of its location to the nearest 15 seconds and the name of the receiving water.

A. OUTFALL NUMBER (list)	B. LATITUDE			C. LONGITUDE			D. RECEIVING WATER (name)
	1. DEG.	2. MIN.	3. SEC.	1. DEG.	2. MIN.	3. SEC.	
04A141	35	47	31	106	15	5	ANCHO CANYON
04A147	35	46	58	106	15	15	CHAQUEHUI CANYON
04A156	35	47	29	106	15	5	ANCHO CANYON

II. FLOWS, SOURCES OF POLLUTION, AND TREATMENT TECHNOLOGIES

A. Attach a line drawing showing the water flow through the facility. Indicate sources of intake water, operations contributing wastewater to the effluent, and treatment units labeled to correspond to the more detailed descriptions in Item B. Construct a water balance on the line drawing by showing average flows between intakes, operations, treatment units, and outfalls. If a water balance cannot be determined *(e.g., for certain mining activities)*, provide a pictorial description of the nature and amount of any sources of water and any collection or treatment measures.

B. For each outfall, provide a description of: (1) All operations contributing wastewater to the effluent, including process wastewater, sanitary wastewater, cooling water, and storm water runoff; (2) The average flow contributed by each operation; and (3) The treatment received by the wastewater. Continue on additional sheets if necessary.

1. OUTFALL NO. (list)	2. OPERATION(S) CONTRIBUTING FLOW		3. TREATMENT		
	a. OPERATION (list)	b. AVERAGE FLOW (include units)	a. DESCRIPTION	b. LIST CODES FROM TABLE 2C-1	
141	TA 39-69 NON CONTACT	3 GPM	NONE		
	COOLING WATER				
147	TA 33-86 NON CONTACT	0 GPM	NONE		
	COOLING WATER				
156	TA 39-89 NON CONTACT	4.6 GPM	NONE		
	COOLING (LASER)				

OFFICIAL USE ONLY (effluent guidelines sub-categories)

CONTINUED FROM THE FRONT

C. Except for storm runoff, leaks, or spills, are any of the discharges described in Items II-A or B intermittent or seasonal?

☒ YES *(complete the following table)* ☐ NO *(go to Section III)*

1. OUTFALL NUMBER *(list)*	2. OPERATION(s) CONTRIBUTING FLOW *(list)*	3. FREQUENCY a. DAYS PER WEEK *(specify average)*	3. FREQUENCY b. MONTHS PER YEAR *(specify average)*	4. FLOW a. FLOW RATE *(in mgd)* 1. LONG TERM AVERAGE	4. FLOW a. FLOW RATE *(in mgd)* 2. MAXIMUM DAILY	4. FLOW b. TOTAL VOLUME *(specify with units)* 1. LONG TERM AVERAGE	4. FLOW b. TOTAL VOLUME *(specify with units)* 2. MAXIMUM DAILY	4. FLOW c. DURATION *(in days)*
141	NCCW	2	12	.001	.001	288 GPD	1770 GPD	4 H/D
156	NCCW	2	12	2 X 10-4	2 X 10-4	250 GPD	250 GPD	1 H/D

III. PRODUCTION

A. Does an effluent guideline limitation promulgated by EPA under Section 304 of the Clean Water Act apply to your facility?

☐ YES *(complete Item III-B)* ☒ NO *(to to Section IV)*

B. Are the limitations in the applicable effluent guideline expressed in terms of production *(or other measure of operation)*?

☐ YES *(complete Item III-C)* ☐ NO *(go to Section IV)*

C. If you answered "yes" to Item III-B, list the quantity which represents an actual measurement of your level of production, expressed in the terms and units used in the applicable effluent guideline, and indicate the affected outfalls.

1. AVERAGE DAILY PRODUCTION a. QUANTITY PER DAY	b. UNITS OF MEASURE	c. OPERATION, PRODUCT, MATERIAL, ETC. *(specify)*	2. AFFECTED OUTFALLS *(list outfall numbers)*

IV. IMPROVEMENTS

A. Are you now required by any Federal, State or local authority to meet any implementation schedule for the construction, upgrading or operation of wastewater treatment equipment or practices or any other environmental programs which may affect the discharges described in this application? This includes, but is not limited to, permit conditions, administrative or enforcement orders, enforcement compliance schedule letters, stipulations, court orders, and grant or loan conditions.

☐ YES *(complete the following table)* ☒ NO *(go to Item IV-B)*

1. IDENTIFICATION OF CONDITION, AGREEMENT, ETC.	2. AFFECTED OUTFALLS a. NO.	2. AFFECTED OUTFALLS b. SOURCE OF DISCHARGE	3. BRIEF DESCRIPTION OF PROJECT	4. FINAL COMPLIANCE DATE a. REQUIRED	4. FINAL COMPLIANCE DATE b. PROJECTED

B. OPTIONAL: You may attach additional sheets describing any additional water pollution control programs *(or other environmental projects which may affect your discharges)* you now have underway or which you plan. Indicate whether each program is now underway or planned, and indicate your actual or planned schedules for construction. ☐ MARK "X" IF DESCRIPTION OF ADDITIONAL CONTROL PROGRAMS IS ATTACHED

 CONTINUE ON PAGE 3

CONTINUED FROM PAGE 2

EPA I.D. NUMBER (copy from Item 1 of Form 1) NM 0890010515

Form Approved
OMB No. 2040-0086
Approval expires 7-31-88

V. INTAKE AND EFFLUENT CHARACTERISTICS

A, B, & C: See instructions before proceeding – Complete one set of tables for each outfall – Annotate the outfall number in the space provided.
NOTE: Tables V-A, V-B, and V-C are included on separate sheets numbered V-1 through V-9.

D. Use the space below to list any of the pollutants listed in Table 2c-3 of the instructions, which you know or have reason to believe is discharged or may be discharged from any outfall. For every pollutant you list, briefly describe the reasons you believe it to be present and report any analytical data in your possession.

1. POLLUTANT	2. SOURCE	1. POLLUTANT	2. SOURCE
NA			

VI. POTENTIAL DISCHARGES NOT COVERED BY ANALYSIS

Is any pollutant listed in Item V-C a substance or a component of a substance which you currently use or manufacture as an intermediate or final product or byproduct?

☐ YES (list all such pollutants below) X ☐ NO (go to Item VI-B)

CONTINUED FROM THE FRONT

VII. BIOLOGICAL TOXICITY TESTING DATA

Do you have any knowledge or reason to believe that any biological test for acute or chronic toxicity has been made on any of your discharges or receiving water in relation to your discharge within the last 3 years?

☐ YES *(identify the test(s) and describe their purposes below)* ☒ NO *(go to Section VIII)*

VIII. CONTRACT ANALYSIS INFORMATION

Were any of the analyses reported in Item V performed by a contract laboratory or consulting firm?

☐ YES *(list the name, address, and telephone number of, and pollutants analyzed by, each such laboratory or firm below)* ☒ NO *(go to Section IX)*

A. NAME	B. ADDRESS	C. TELEPHONE *(area code & no.)*	D. POLLUTANTS ANALYZED *(list)*

IX. CERTIFICATION

I certify under penalty of law that this document and all attachments were prepared under my direction or supervision in accordance with a system designed to assure that qualified personnel properly gather and evaluate the information submitted. Based on my inquiry of the person or persons who manage the system or those persons directly responsible for gathering the information, the information submitted is, to the best of my knowledge and belief, true, accurate, and complete. I am aware that there are significant penalties for submitting false information, including the possibility of fine and imprisonment for knowing violations.

A. NAME & OFFICIAL TITLE *(type or print)*	B. PHONE NO. *(area code & no.)*
C. SIGNATURE	D. DATE SIGNED

PLEASE PRINT OR TYPE IN THE UNSHADED AREAS ONLY. You may report some or all of this information on separate sheets *(use the same format)* instead of completing these pages. SEE INSTRUCTIONS.

EPA I.D. NUMBER *(copy from Item I of Form 1)*: NM 0890010515

Form Approved OMB No. 2040-0086 Approval expires 7-31-88

V. INTAKE AND EFFLUENT CHARACTERISTICS *(continued from page 3 of Form 2-C)*

I 04A-141

PART A - You must provide the results of at least one analysis for every pollutant in this table. Complete one table for each outfall. See instructions for additional details.

1. POLLUTANT	2. EFFLUENT a. MAXIMUM DAILY VALUE (1) CONCENTRATION	(2) MASS	b. MAXIMUM 30 DAY VALUE *(if available)* (1) CONCENTRATION	(2) MASS	c. LONG TERM AVRG. VALUE *(if available)* (1) CONCENTRATION	(2) MASS	d. NO. OF ANALYSES	3. UNITS *(specify if blank)* a. CONCENTRATION	b. MASS	4. INTAKE *(optional)* a. LONG TERM AVERAGE VALUE (1) CONCENTRATION	(2) MASS	b. NO. OF ANALYSES
a. Biochemical Oxygen Demand (BOD)	< 2	< 2.2						mg/L	g/d			
b. Chemical Oxygen Demand (COD)	< 10	< 10.9						mg/L	g/d			
c. Total Organic Carbon (TOC)	0.59	0.6						mg/L	g/d			
d. Total Suspended Solids (TSS)	18	19.6						mg/L	g/d			
e. Ammonia *(as N)*	< 0.1	< 0.1						mg/L	g/d			
f. Flow	VALUE 288		VALUE		VALUE			gpd		VALUE		
g. Temperature *(winter)*	VALUE 13.9 C		VALUE		VALUE			°C		VALUE		
h. Temperature *(summer)*	VALUE N.A.		VALUE		VALUE			°C		VALUE		
i. pH	MINIMUM 8.45	MAXIMUM 8.80	MINIMUM 8.3	MAXIMUM 8.9				STANDARD UNITS				

PART B - Mark "X" in column 2-a for each pollutant you know or have reason to believe is present. Mark "X" in column 2-b for each pollutant you believe to be absent. If you mark column 2a for any pollutant which is limited either directly, or indirectly but expressly, in an effluent limitations guideline, you must provide the results of at least one analysis for that pollutant. For other pollutants for which you mark column 2a, you must provide quantitative data or an explanation of their presence in your discharge. Complete one table for each outfall. See the instructions for additional details and requirements.

1. POLLUTANT AND CAS NO. *(if available)*	2. MARK "X" a. BELIEVED PRESENT	b. BELIEVED ABSENT	3. EFFLUENT a. MAXIMUM DAILY VALUE (1) CONCENTRATION	(2) MASS	b. MAXIMUM 30 DAY VALUE *(if available)* (1) CONCENTRATION	(2) MASS	c. LONG TERM AVRG. VALUE *(if available)* (1) CONCENTRATION	(2) MASS	d. NO. OF ANALYSES	4. UNITS a. CONCENTRATION	b. MASS	5. INTAKE *(optional)* a. LONG TERM AVERAGE VALUE (1) CONCENTRATION	(2) MASS	b. NO. OF ANALYSES
a. Bromide (24959-67-9)		X	< .05	< 54.5						mg/L	mg/d			
b. Chlorine, Total Residual	X		0.05	54.5						mg/L	mg/d			
c. Color	X		7.0							units				
d. Fecal Coliform		X												
e. Fluoride (16984-48-8)	X		0.21	228.9						mg/L	mg/d			
f. Nitrate-Nitrite *(as N)*	X		0.304	331.4						mg/L	mg/d			

1. POLLUTANT AND CAS NO. (if available)	2. MARK "X" a. BELIEVED PRESENT	b. BELIEVED ABSENT	3. EFFLUENT a. MAXIMUM DAILY VALUE (1) CONCENTRATION	(2) MASS	b. MAXIMUM 30 DAY VALUE (if available) (1) CONCENTRATION	(2) MASS	c. LONG TERM AVRG. VALUE (if available) (1) CONCENTRATION	(2) MASS	d. NO. OF ANALYSES	4. UNITS a. CONCENTRATION	b. MASS	5. INTAKE (optional) a. LONG TERM AVERAGE VALUE (1) CONCENTRATION	(2) MASS	b. NO. OF ANALYSES
g. Nitrogen, Total Organic (as N)		X	< 0.5	< 545.0						mg/L	mg/d			
h. Oil and Grease		X	< 1.05	< 1,144.6						mg/L	mg/d			
i. Phosphorus (as P), Total (7723-14-0)	X		0.05	54.5						mg/L	mg/d			
j. Radioactivity														
(1) Alpha, Total	X		0.1	109.0						pCi/L	mg/d			
(2) Beta, Total	X		6.6	7,194.5						pCi/L	mg/d			
(3) Radium, Total		X												
(4) Radium 226, Total	X		0.06	65.4						pCi/L	mg/d			
k. Sulfate (as SO_4) (14808-79-8)	X		3.16	3,444.7						mg/L	mg/d			
l. Sulfide (as S)		X												
m. Sulfite (as SO_3) (14265-45-3)		X	< 0.05	< 54.5						mg/L	mg/d			
n. Surfactants		X	< 0.1	< 109.0						mg/L	mg/d			
o. Aluminum, Total (7429-90-5)		X	< 0.04	< 43.6						mg/L	mg/d			
p. Barium, Total (7440-39-3)	X		0.03	32.7						mg/L	mg/d			
q. Boron, Total (7440-42-8)	X		0.02	21.8						mg/L	mg/d			
r. Cobalt, Total (7440-48-4)		X	< 0.01	< 10.9						mg/L	mg/d			
s. Iron, Total (7439-89-6)	X		4.1	4,469.3						mg/L	mg/d			
t. Magnesium, Total (7439-95-4)	X		2.5	2,725.2						mg/L	mg/d			
u. Molybdenum, Total (7439-98-7)		X	< 0.02	< 21.8						mg/L	mg/d			
v. Manganese, Total (7439-96-5)	X		0.01	10.9						mg/L	mg/d			
w. Tin, Total (7440-31-5)		X	< 0.05	< 54.5						mg/L	mg/d			
x. Titanium, Total (7440-32-6)		X	< 0.004	< 4.4						mg/L	mg/d			

CONTINUE ON PAGE V-

EPA I.D. NUMBER (copy from Item 1 of Form 1)	OUTFALL NUMBER
NM 0890010515	04A-141

Form Approved
OMB No. 2040-0086
Approval expires 7-31-88

CONTINUED FROM PAGE 3 OF FORM 2-C

PART C - If you are a primary industry and this outfall contains process wastewater, refer to Table 2c-2 in the instructions to determine which of the GC/MS fractions you must test for. Mark "X" in column 2-a for all such GC/MS fractions that apply to your industry and for ALL toxic metals, cyanides, and total phenols. If you are not required to mark column 2-a *(secondary industries, nonprocess wastewater outfalls, and nonrequired GC/MS fractions)*, mark "X" in column 2-b for each pollutant you know or have reason to believe is present. Mark "X" in column 2-c for each pollutant you believe is absent. If you mark column 2a for any pollutant, you must provide the results of at least one analysis for that pollutant. If you mark column 2b for any pollutant, you must provide the results of at least one analysis for that pollutant if you know or have reason to believe it will be discharged in concentrations of 10 ppb or greater. If you mark column 2b for acrolein, acrylonitrile, 2,4 dinitrophenol, or 2-methyl-4, 6 dinitrophenol, you must provide the results of at least one analysis for each of these pollutants which you know or have reason to believe that you discharge in concentrations of 100 ppb or greater. Otherwise, for pollutants for which you mark column 2b, you must either submit at least one analysis or briefly describe the reasons the pollutant is expected to be discharged. Note that there are 7 pages to this part; please review each carefully. Complete one table *(all 7 pages)* for each outfall. See instructions for additional details and requirements.

1. POLLUTANT AND CAS NUMBER (if available)	2. MARK 'X'			3. EFFLUENT							4. UNITS		5. INTAKE (optional)		
	a. TESTING REQUIRED	b. BELIEVED PRESENT	c. BELIEVED ABSENT	a. MAXIMUM DAILY VALUE (1) CONCENTRATION	a. MAXIMUM DAILY VALUE (2) MASS	b. MAXIMUM 30 DAY VALUE (if available) (1) CONCENTRATION	b. MAXIMUM 30 DAY VALUE (if available) (2) MASS	c. LONG TERM AVRG. VALUE (if available) (1) CONCENTRATION	c. LONG TERM AVRG. VALUE (if available) (2) MASS	d. NO. OF ANALYSES	a. CONCENTRATION	b. MASS	a. LONG TERM AVERAGE VALUE (1) CONCENTRATION	a. LONG TERM AVERAGE VALUE (2) MASS	b. NO. OF ANALYSES
METALS, CYANIDE, AND TOTAL PHENOLS															
1M. Antimony, Total (7440-36-0)			X	< 0.05	< 54.5						mg/L	mg/d			
2M. Arsenic, Total (7440-38-2)		X		0.002	2.2						mg/L	mg/d			
3M. Beryllium, Total, 7440-41-7)			X	< 0.001	< 1.1						mg/L	mg/d			
4M. Cadmium, Total (7440-43-9)			X	< 0.01	< 10.9						mg/L	mg/d			
5M. Chromium, Total (7440-47-3)		X		0.040	11.5						mg/L	mg/d			
6M. Copper, Total (7440-50-8)		X		0.031	33.8						mg/L	mg/d			
7M. Lead, Total (7439-92-1)			X	< 0.05	< 54.5						mg/L	mg/d			
8M. Mercury, Total (7439-97-6)			X	< .0002	< 0.2						mg/L	mg/d			
9M. Nickel, Total (7440-02-0)		X		0.06	65.4						mg/L	mg/d			
10M. Selenium, Total (7782-49-2)			X	< 0.001	< 1.1						mg/L	mg/d			
11M. Silver, Total (7440-22-4)			X	< 0.01	< 10.9						mg/L	mg/d			
12M. Thallium, Total (7440-28-0)			X	< 0.4	< 436.0						mg/L	mg/d			
13M. Zinc, Total (7440-66-6)		X		0.043	46.9						mg/L	mg/d			
14M. Cyanide, Total (57-12-5)			X	< 0.01	< 10.9						mg/L	mg/d			
15M. Phenols, Total			X	< 0.01	< 10.9						mg/L	mg/d			
DIOXIN															
2,3,7,8 Tetra chlorodibenzo P. Dioxin (1764-01-6)			X	DESCRIBE RESULTS											

CONTINUE ON REVERSE

1. POLLUTANT AND CAS NUMBER *(if available)*	2. MARK 'X'			3. EFFLUENT							4. UNITS		5. INTAKE *(optional)*		
	a. TESTING REQUIRED	b. BELIEVED PRESENT	c. BELIEVED ABSENT	a. MAXIMUM DAILY VALUE (1) CONCENTRATION	a. MAXIMUM DAILY VALUE (2) MASS	b. MAXIMUM 30 DAY VALUE *(if available)* (1) CONCENTRATION	b. (2) MASS	c. LONG TERM AVRG. VALUE *(if available)* (1) CONCENTRATION	c. (2) MASS	d. NO. OF ANALYSES	a. CONCENTRATION	b. MASS	a. LONG TERM AVERAGE VALUE (1) CONCENTRATION	a. (2) MASS	b. NO. OF ANALYSES
GC/MS FRACTION — VOLATILE COMPOUNDS															
1V. Acrolein (107-02-8)			X												
2V. Acrylonitrile (107-13-1)			X												
3V. Benzene (71-43-2)			X	< 0.005	< 5.5						mg/L	mg/d			
4V. Bis *(Chloromethyl)* Ether (542-88-1)			X												
5V. Bromoform (75-25-2)			X	< 0.005	< 5.5						mg/L	mg/d			
6V. Carbon Tetrachloride (56-23-5)			X	< 0.005	< 5.5						mg/L	mg/d			
7V. Chlorobenzene (108-90-7)			X	< 0.005	< 5.5						mg/L	mg/d			
8V. Chlorodibromomethane (124-48-1)			X	< 0.005	< 5.5						mg/L	mg/d			
9V. Chloroethane (75-00-3)			X	< 0.01	< 10.9						mg/L	mg/d			
10V. 2-Chloroethylvinyl Ether (110-75-8)			X												
11V. Chloroform (67-66-3)			X	< 0.005	< 5.5						mg/L	mg/d			
12V. Dichlorobromomethane (75-27-4)			X	< 0.005	< 5.5						mg/L	mg/d			
13V. Dichlorodifluoromethane (75-71-8)			X												
14V. 1,1-Dichloroethane (75-34-3)			X	< 0.005	< 5.5						mg/L	mg/d			
15V. 1,2-Dichloroethane (107-06-2)			X	< 0.005	< 5.5						mg/L	mg/d			
16V. 1,1-Dichloroethylene (75-35-4)			X	< 0.005	< 5.5						mg/L	mg/d			
17V. 1,2-Dichloropropane (78-87-5)			X	< 0.005	< 5.5						mg/L	mg/d			
18V. 1,3-Dichloropropylene (542-75-6)			X												
19V. Ethylbenzene (100-41-4)			X	< 0.005	< 5.5						mg/L	mg/d			
20V. Methyl Bromide (74-83-9)			X	< 0.01	< 10.9						mg/L	mg/d			
21V. Methyl Chloride (74-87-3)			X	< 0.01	< 10.9						mg/L	mg/d			

 CONTINUE ON PAGE

Form Approved.
OMB No. [illegible]-0008
Approval expires 7-31-88

PA I. MBE[illegible] y fro[illegible] n I o[illegible] 1) [illegible] ALL[illegible]IER

NM 0890010515 | 04A-141

CONTINUED FROM PAGE V-4

1. POLLUTANT AND CAS NUMBER (if available)	2. MARK 'X' a. REQUIRED	b. BELIEVED PRESENT	c. BELIEVED ABSENT	3. EFFLUENT a. MAXIMUM DAILY VALUE (1) CONCENTRATION	(2) MASS	b. MAXIMUM 30 DAY VALUE (if available) (1) CONCENTRATION	(2) MASS	c. LONG TERM AVRG. VALUE (if available) (1) CONCENTRATION	(2) MASS	d. NO. OF ANALYSES	4. UNITS a. CONCENTRATION	b. MASS	5. INTAKE (optional) a. LONG TERM AVERAGE VALUE (1) CONCENTRATION	(2) MASS	b. NO. OF ANALYSES
GC/MS FRACTION – VOLATILE COMPOUNDS (continued)															
22V. Methylene Chloride (75 09 2)			X	< 0.005	< 5.5						mg/L	mg/d			
23V. 1,1,2,2-Tetrachloroethane (79 34 5)			X	< 0.005	< 5.5						mg/L	mg/d			
24V. Tetrachloroethylene (127-18-4)			X	< 0.005	< 5.5						mg/L	mg/d			
25V. Toluene (108 88 3)			X	< 0.005	< 5.5						mg/L	mg/d			
26V. 1,2-Trans-Dichloroethylene (156 60-5)			X	< 0.005	< 5.5						mg/L	mg/d			
27V. 1,1,1-Trichloroethane (71-55-6)			X	< 0.005	< 5.5						mg/L	mg/d			
28V. 1,1,2-Trichloroethane (79 00 5)			X	< 0.005	< 5.5						mg/L	mg/d			
29V. Trichloroethylene (79-01-6)			X	< 0.005	< 5.5						mg/L	mg/d			
30V. Trichlorofluoromethane (75-69-4)			X	< 0.005	< 5.5						mg/L	mg/d			
31V. Vinyl Chloride (75-01-4)			X	< 0.01	< 10.9						mg/L	mg/d			
GC/MS FRACTION – ACID COMPOUNDS															
1A. 2 Chlorophenol (95 57 8)			X	< 0.01	< 10.9						mg/L	mg/d			
2A. 2,4 Dichlorophenol (120 83-2)			X	< 0.01	< 10.9						mg/L	mg/d			
3A. 2,4 Dimethylphenol (105 67-9)			X	< 0.01	< 10.9						mg/L	mg/d			
4A. 4,6 Dinitro-O Cresol (534 52 1)			X	< 0.01	< 10.9						mg/L	mg/d			
5A. 2,4 Dinitrophenol (51 28 5)			X	< 0.01	< 10.9						mg/L	mg/d			
6A. 2 Nitrophenol (88 75 5)			X	< 0.01	< 10.9						mg/L	mg/d			
7A. 4 Nitrophenol (100 02-7)			X	< 0.01	< 10.9						mg/L	mg/d			
8A. P Chloro M-Cresol (59 50-7)			X	< 0.01	< 10.9						mg/L	mg/d			
9A. Pentachlorophenol (87 86 5)			X	< 0.01	< 10.9						mg/L	mg/d			
10A. Phenol (108 95 2)			X	< 0.01	< 10.9						mg/L	mg/d			
11A. 2,4,6-Trichlorophenol															

CONTINUED FROM THE FRONT

1. POLLUTANT AND CAS NUMBER (if available)	2. MARK 'X' a. TEST BOTH	b. BELIEVED PRESENT	c. BELIEVED ABSENT	3. EFFLUENT a. MAXIMUM DAILY VALUE (1) CONCENTRATION	(2) MASS	b. MAXIMUM 30 DAY VALUE (if available) (1) CONCENTRATION	(2) MASS	c. LONG TERM AVRG. VALUE (if available) (1) CONCENTRATION	(2) MASS	d. NO OF ANALYSES	4. UNITS a. CONCENTRATION	b. MASS	5. INTAKE (optional) a. LONG TERM AVERAGE VALUE (1) CONCENTRATION	(2) MASS	b. NO OF ANALYSES
GC/MS FRACTION - BASE/NEUTRAL COMPOUNDS															
1B. Acenaphthene (83-32-9)			X	< 0.01	< 10.9						mg/L	mg/d			
2B. Acenaphtylene (208-96-8)			X	< 0.01	< 10.9						mg/L	mg/d			
3B. Anthracene (120-12-7)			X	< 0.01	< 10.9						mg/L	mg/d			
4B. Benzidine (92-87-5)			X	< 0.01	< 10.9						mg/L	mg/d			
5B. Benzo *(a)* Anthracene (56-55-3)			X	< 0.01	< 10.9						mg/L	mg/d			
6B. Benzo *(a)* Pyrene (50-32-8)			X	< 0.01	< 10.9						mg/L	mg/d			
7B. 3,4 Benzo-fluoranthene (205-99-2)			X	< 0.01	< 10.9						mg/L	mg/d			
8B. Benzo *(ghi)* Perylene (191-24-2)			X	< 0.01	< 10.9						mg/L	mg/d			
9B. Benzo *(k)* Fluoranthene (207-08-9)			X	< 0.01	< 10.9						mg/L	mg/d			
10B. Bis *(2-Chloro-ethoxy)* Methane (111-91-1)			X	< 0.01	< 10.9						mg/L	mg/d			
11B. Bis *(2-Chloro-ethyl)* Ether (111-44-4)			X	< 0.01	< 10.9						mg/L	mg/d			
12B Bis *(2 Chloroiso-propyl)* Ether (102-60-1)			X	< 0.01	< 10.9						mg/L	mg/d			
13B. Bis *(2-Ethyl-hexyl)* Phthalate (117-81-7)			X	< 0.01	< 10.9						mg/L	mg/d			
14B. 4-Bromo-phenyl Phenyl Ether (101-55-3)			X	< 0.01	< 10.9						mg/L	mg/d			
15B. Butyl Benzyl Phthalate (85-68-7)			X	< 0.01	< 10.9						mg/L	mg/d			
16B. 2-Chloro-naphthalene (91-58-7)			X	< 0.01	< 10.9						mg/L	mg/d			
17B. 4 Chloro phenyl Phenyl Ether (7005-72-3)			X	< 0.01	< 10.9						mg/L	mg/d			
18B. Chrysene (218-01-9)			X	< 0.01	< 10.9						mg/L	mg/d			
19B. Dibenzo *(a,h)* Anthracene (53-70-3)			X	< 0.01	< 10.9						mg/L	mg/d			
20B. 1,2 Dichloro-benzene (95-50-1)			X	< 0.01	< 10.9						mg/L	mg/d			
21B. 1,3-Dichloro-benzene (541-73-1)			X	< 0.01	< 10.9						mg/L	mg/d			

CONTINUE ON PAGE

EPA I.D. NUMBER (copy from Item 1 of Form 1): NM 0890010515

OUTFALL NUMBER: 04A-141

Form Approved
OMB No. 2040-0086
Approval expires 7-31-88

1. POLLUTANT AND CAS NUMBER (if available)	2. MARK 'X' a. TEST INCLUDED	b. BELIEVED PRESENT	c. BELIEVED ABSENT	3. EFFLUENT a. MAXIMUM DAILY VALUE (1) CONCENTRATION	(2) MASS	b. MAXIMUM 30 DAY VALUE (if available) (1) CONCENTRATION	(2) MASS	c. LONG TERM AVRG. VALUE (if available) (1) CONCENTRATION	(2) MASS	d. NO. OF ANALYSES	4. UNITS a. CONCENTRATION	b. MASS	5. INTAKE (optional) a. LONG TERM AVERAGE VALUE (1) CONCENTRATION	(2) MASS	b. NO. OF ANALYSES
GC/MS FRACTION – BASE/NEUTRAL COMPOUNDS (continued)															
22B. 1,4 Dichlorobenzene (106-46-7)			X	< 0.01	< 10.9						mg/L	mg/d			
23B. 3,3' Dichlorobenzidine (91-94-1)			X	< 0.01	< 10.9						mg/L	mg/d			
24B. Diethyl Phthalate (84-66-2)			X	< 0.01	< 10.9						mg/L	mg/d			
25B. Dimethyl Phthalate (131-11-3)			X	< 0.01	< 10.9						mg/L	mg/d			
26B. Di-N-Butyl Phthalate (84-74-2)			X	< 0.01	< 10.9						mg/L	mg/d			
27B. 2,4-Dinitrotoluene (121-14-2)			X	< 0.01	< 10.9						mg/L	mg/d			
28B. 2,6 Dinitrotoluene (606-20-2)			X	< 0.01	< 10.9						mg/L	mg/d			
29B. Di-N-Octyl Phthalate (117-84-0)			X	< 0.01	< 10.9						mg/L	mg/d			
30B. 1,2-Diphenylhydrazine (as Azobenzene) (122-66-7)			X	< 0.01	< 10.9						mg/L	mg/d			
31B. Fluoranthene (206-44-0)			X	< 0.01	< 10.9						mg/L	mg/d			
32B. Fluorene (86-73-7)			X	< 0.01	< 10.9						mg/L	mg/d			
33B. Hexachlorobenzene (118-74-1)			X	< 0.01	< 10.9						mg/L	mg/d			
34B. Hexachlorobutadiene (87-68-3)			X	< 0.01	< 10.9						mg/L	mg/d			
35B. Hexachlorocyclopentadiene (77-47-4)			X	< 0.01	< 10.9						mg/L	mg/d			
36B. Hexachloroethane (67-72-1)			X	< 0.01	< 10.9						mg/L	mg/d			
37B. Indeno (1,2,3-cd) Pyrene (193-39-5)			X	< 0.01	< 10.9						mg/L	mg/d			
38B. Isophorone (78-59-1)			X	< 0.01	< 10.9						mg/L	mg/d			
39B. Naphthalene (91-20-3)			X	< 0.01	< 10.9						mg/L	mg/d			
40B. Nitrobenzene (98-95-3)			X	< 0.01	< 10.9						mg/L	mg/d			
41B. N-Nitrosodimethylamine (62-75-9)			X	< 0.01	< 10.9						mg/L	mg/d			
42B. N-Nitrosodi-N-Propylamine (621-64-7)															

CONTINUED FROM THE FRONT

1. POLLUTANT AND CAS NUMBER (if available)	2. MARK "X" a. TESTING REQUIRED	b. BELIEVED PRESENT	c. BELIEVED ABSENT	3. EFFLUENT a. MAXIMUM DAILY VALUE (1) CONCENTRATION	(2) MASS	b. MAXIMUM 30 DAY VALUE (if available) (1) CONCENTRATION	(2) MASS	c. LONG TERM AVRG. VALUE (if available) (1) CONCENTRATION	(2) MASS	d. NO. OF ANALYSES	4. UNITS a. CONCENTRATION	b. MASS	5. INTAKE (optional) a. LONG TERM AVERAGE VALUE (1) CONCENTRATION	(2) MASS	b. NO. OF ANALYSES
GC/MS FRACTION – BASE/NEUTRAL COMPOUNDS (continued)															
43B. N Nitrosodiphenylamine (86 30 6)			X	< 0.01	< 10.9						mg/L	mg/d			
44B. Phenanthrene (85-01-8)			X	< 0.01	< 10.9						mg/L	mg/d			
45B. Pyrene (129 00 0)			X	< 0.01	< 10.9						mg/L	mg/d			
46B. 1,2,4 - Trichlorobenzene (120 82 1)			X	< 0.01	< 10.9						mg/L	mg/d			
GC/MS FRACTION – PESTICIDES															
1P. Aldrin (309 00 2)			X	< .00006	< 0.1						mg/L	mg/d			
2P. α BHC (319 84-6)			X	< .0002	< 0.2						mg/L	mg/d			
3P. β-BHC (319 85 7)			X	< .0001	< 0.1						mg/L	mg/d			
4P γ-BHC (58 89 9)			X	< .00003	< 0.0						mg/L	mg/d			
5P. δ BHC (319 86 8)			X	< .00012	< 0.1						mg/L	mg/d			
6P. Chlordane (57 74 9)			X	< .00025	< 0.3						mg/L	mg/d			
7P. 4,4' DDT (50 29-3)			X	< .00006	< 0.1						mg/L	mg/d			
8P. 4,4' DDE (72-55 9)			X	< .00008	< 0.1						mg/L	mg/d			
9P. 4,4' DDD (72 54 8)			X	< .00008	< 0.1						mg/L	mg/d			
10P. Dieldrin (60-57-1)			X	< .00008	< 0.1						mg/L	mg/d			
11P. α Endosulfan (115-29 7)			X	< .00005	< 0.1						mg/L	mg/d			
12P. β Endosulfan (115 29 7)			X	< .00008	< 0.1						mg/L	mg/d			
13P. Endosulfan Sulfate (1031 07 8)			X	< .00009	< 0.1						mg/L	mg/d			
14P. Endrin (72 20 8)			X	< .00006	< 0.1						mg/L	mg/d			
15P. Endrin Aldehyde (7421 93 4)			X	< .00062	< 0.7						mg/L	mg/d			
16P. Heptachlor (76-44 8)			X	< .00003	< 0.0						mg/L	mg/d			

CONTINUE ON PAGE

Form Approved
OMB No. 2040 0086
Approval expires 7 31 88

EPA I.D. NUMBER (copy from Item 1 of Form 1)	OUTFALL NUMBER
NM 0890010515	04A-141

CONTINUED FROM PAGE V-8

1. POLLUTANT AND CAS NUMBER (if available)	2. MARK "X" a. TESTING REQUIRED	b. BELIEVED PRESENT	c. BELIEVED ABSENT	3. EFFLUENT a. MAXIMUM DAILY VALUE (1) CONCENTRATION	(2) MASS	b. MAXIMUM 30 DAY VALUE (if available) (1) CONCENTRATION	(2) MASS	c. LONG TERM AVRG. VALUE (if available) (1) CONCENTRATION	(2) MASS	d. NO. OF ANALYSES	4. UNITS a. CONCENTRATION	b. MASS	5. INTAKE (optional) a. LONG TERM AVERAGE VALUE (1) CONCENTRATION	(2) MASS	b. NO. OF ANALYSES
GC/MS FRACTION – PESTICIDES (continued)															
17P. Heptachlor Epoxide (1024-57-3)			X	< .00004	< 0.0						mg/L	mg/d			
18P. PCB-1242 (53469-21-9)			X	< .00068	< 0.7						mg/L	mg/d			
19P. PCB-1254 (11097-69-1)			X	< .00068	< 0.7						mg/L	mg/d			
20P. PCB-1221 (11104-28-2)			X												
21P. PCB-1232 (11141-16-5)			X												
22P. PCB-1248 (12672-29-6)			X												
23P. PCB-1260 (11096-82-5)			X	< .00068	< 0.7						mg/L	mg/d			
24P. PCB-1016 (12674-11-2)			X												
25P. Toxaphene (8001-35-2)			X	< .0025	< 2.7						mg/L	mg/d			

PLEASE PRINT OR TYPE IN THE UNSHADED AREAS ONLY. You may report some or all of this information on separate sheets *(use the same format)* instead of completing these pages. SEE INSTRUCTIONS.

EPA I.D. NUMBER *(copy from Item I of Form 1)*: NM 0890010515

Form Approved OMB No. 2040-0086 Approval expires 7-31-88

V. INTAKE AND EFFLUENT CHARACTERISTICS *(continued from page 3 of Form 2 C)* 04A-156

PART A - You must provide the results of at least one analysis for every pollutant in this table. Complete one table for each outfall. See instructions for additional details.

1. POLLUTANT	2. EFFLUENT a. MAXIMUM DAILY VALUE (1) CONCENTRATION	(2) MASS	b. MAXIMUM 30 DAY VALUE (if available) (1) CONCENTRATION	(2) MASS	c. LONG TERM AVRG. VALUE (if available) (1) CONCENTRATION	(2) MASS	d. NO. OF ANALYSES	3. UNITS (specify if blank) a. CONCENTRATION	b. MASS	4. INTAKE (optional) a. LONG TERM AVERAGE VALUE (1) CONCENTRATION	(2) MASS	b. NO. OF ANALYSES
a. Biochemical Oxygen Demand (BOD)	< 2	< 1.9						mg/L	g/d			
b. Chemical Oxygen Demand (COD)	< 10	< 9.5						mg/L	g/d			
c. Total Organic Carbon (TOC)	0.59	0.6						mg/L	g/d			
d. Total Suspended Solids (TSS)	18	17.0						mg/L	g/d			
e. Ammonia (as N)	< 0.1	< 0.1						mg/L	g/d			
f. Flow	VALUE 250		VALUE		VALUE			gpd		VALUE		
g. Temperature (winter)	VALUE 13.9 C		VALUE		VALUE			°C		VALUE		
h. Temperature (summer)	VALUE N.A.		VALUE		VALUE			°C		VALUE		
i. pH	MINIMUM 8.45	MAXIMUM 8.80	MINIMUM 8.3	MAXIMUM 8.9				STANDARD UNITS				

PART B - Mark "X" in column 2-a for each pollutant you know or have reason to believe is present. Mark "X" in column 2-b for each pollutant you believe to be absent. If you mark column 2a for any pollutant which is limited either directly, or indirectly but expressly, in an effluent limitations guideline, you must provide the results of at least one analysis for that pollutant. For other pollutants for which you mark column 2a, you must provide quantitative data or an explanation of their presence in your discharge. Complete one table for each outfall. See the instructions for additional details and requirements.

1. POLLUTANT AND CAS NO. (if available)	2. MARK "X" a. BELIEVED PRESENT	b. BELIEVED ABSENT	3. EFFLUENT a. MAXIMUM DAILY VALUE (1) CONCENTRATION	(2) MASS	b. MAXIMUM 30 DAY VALUE (if available) (1) CONCENTRATION	(2) MASS	c. LONG TERM AVRG. VALUE (if available) (1) CONCENTRATION	(2) MASS	d. NO. OF ANALYSES	4. UNITS a. CONCENTRATION	b. MASS	5. INTAKE (optional) a. LONG TERM AVERAGE VALUE (1) CONCENTRATION	(2) MASS	b. NO. OF ANALYSES
a. Bromide (24959-67-9)		X	< .05	< 47.3						mg/L	mg/d			
b. Chlorine, Total Residual	X		0.05	47.3						mg/L	mg/d			
c. Color	X		7.0							units				
d. Fecal Coliform		X												
e. Fluoride (16984-48-8)	X		0.21	198.7						mg/L	mg/d			
f. Nitrate-Nitrite (as N)	X		0.304	287.7						mg/L	mg/d			

1. POLLUTANT AND CAS NO. (if available)	2. MARK 'X' a. BELIEVED PRESENT	b. BELIEVED ABSENT	3. EFFLUENT a. MAXIMUM DAILY VALUE (1) CONCENTRATION	(2) MASS	b. MAXIMUM 30 DAY VALUE (if available) (1) CONCENTRATION	(2) MASS	c. LONG TERM AVRG. VALUE (if available) (1) CONCENTRATION	(2) MASS	d. NO. OF ANALYSES	4. UNITS a. CONCENTRATION	b. MASS	5. INTAKE (optional) a. LONG TERM AVERAGE VALUE (1) CONCENTRATION	(2) MASS	b. NO. OF ANALYSES
g. Nitrogen, Total Organic (as N)		X	< 0.5	< 473.1						mg/L	mg/d			
h. Oil and Grease		X	< 1.05	< 993.6						mg/L	mg/d			
i. Phosphorus (as P), Total (7723-14-0)	X		0.05	47.3						mg/L	mg/d			
j. Radioactivity														
(1) Alpha, Total	X		0.1	94.6						pCi/L	mg/d			
(2) Beta, Total	X		6.6	6,245.2						pCi/L	mg/d			
(3) Radium, Total		X												
(4) Radium 226, Total	X		0.06	56.8						pCi/L	mg/d			
k. Sulfate (as SO_4) (14808-79-8)	X		3.16	2,990.2						mg/L	mg/d			
l. Sulfide (as S)		X												
m. Sulfite (as SO_3) (14265-45-3)		X	< 0.05	< 47.3						mg/L	mg/d			
n. Surfactants		X	< 0.1	< 94.6						mg/L	mg/d			
o. Aluminum, Total (7429-90-5)		X	< 0.04	< 37.9						mg/L	mg/d			
p. Barium, Total (7440-39-3)	X		0.03	28.4						mg/L	mg/d			
q. Boron, Total (7440-42-8)	X		0.02	18.9						mg/L	mg/d			
r. Cobalt, Total (7440-48-4)		X	< 0.01	< 9.5						mg/L	mg/d			
s. Iron, Total (7439-89-6)	X		4.1	3,879.6						mg/L	mg/d			
t. Magnesium, Total (7439-95-4)	X		2.5	2,365.6						mg/L	mg/d			
u. Molybdenum, Total (7439-98-7)		X	< 0.02	< 18.9						mg/L	mg/d			
v. Manganese, Total (7439-96-5)	X		0.01	9.5						mg/L	mg/d			
w. Tin, Total (7440-31-5)		X	< 0.05	< 47.3						mg/L	mg/d			
x. Titanium, Total (7440-32-6)		X	< 0.004	< 3.8						mg/L	mg/d			

CONTINUE ON PAGE V-

EPA I.D. NUMBER (copy from Item 1 of Form 1)	OUTFALL NUMBER
NM 0890010515	04A-156

Form Approved.
OMB No. 2040-0086
Approval expires 7-31-88

CONTINUED FROM PAGE 3 OF FORM 2-C

PART C - If you are a primary industry and this outfall contains process wastewater, refer to Table 2c-2 in the instructions to determine which of the GC/MS fractions you must test for. Mark "X" in column 2-a for all such GC/MS fractions that apply to your industry and for ALL toxic metals, cyanides, and total phenols. If you are not required to mark column 2-a *(secondary industries, nonprocess wastewater outfalls, and nonrequired GC/MS fractions)*, mark "X" in column 2-b for each pollutant you know or have reason to believe is present. Mark "X" in column 2-c for each pollutant you believe is absent. If you mark column 2a for any pollutant, you must provide the results of at least one analysis for that pollutant. If you mark column 2b for any pollutant, you must provide the results of at least one analysis for that pollutant if you know or have reason to believe it will be discharged in concentrations of 10 ppb or greater. If you mark column 2b for acrolein, acrylonitrile, 2,4 dinitrophenol, or 2-methyl-4, 6 dinitrophenol, you must provide the results of at least one analysis for each of these pollutants which you know or have reason to believe that you discharge in concentrations of 100 ppb or greater. Otherwise, for pollutants for which you mark column 2b, you must either submit at least one analysis or briefly describe the reasons the pollutant is expected to be discharged. Note that there are 7 pages to this part; please review each carefully. Complete one table *(all 7 pages)* for each outfall. See instructions for additional details and requirements.

1. POLLUTANT AND CAS NUMBER (if available)	2. MARK 'X'			3. EFFLUENT							4. UNITS		5. INTAKE (optional)		
	a. TESTING REQUIRED	b. BELIEVED PRESENT	c. BELIEVED ABSENT	a. MAXIMUM DAILY VALUE (1) CONCENTRATION	a. MAXIMUM DAILY VALUE (2) MASS	b. MAXIMUM 30 DAY VALUE (if available) (1) CONCENTRATION	b. MAXIMUM 30 DAY VALUE (if available) (2) MASS	c. LONG TERM AVRG. VALUE (if available) (1) CONCENTRATION	c. LONG TERM AVRG. VALUE (if available) (2) MASS	d. NO. OF ANALYSES	a. CONCENTRATION	b. MASS	a. LONG TERM AVERAGE VALUE (1) CONCENTRATION	a. LONG TERM AVERAGE VALUE (2) MASS	b. NO. OF ANALYSES
METALS, CYANIDE, AND TOTAL PHENOLS															
1M. Antimony, Total (7440-36-0)			X	< 0.05	< 47.3						mg/L	mg/d			
2M. Arsenic, Total (7440-38-2)		X		0.002	1.9						mg/L	mg/d			
3M. Beryllium, Total, 7440-41-7)			X	< 0.001	< 0.9						mg/L	mg/d			
4M. Cadmium, Total (7440-43-9)			X	< 0.01	< 9.5						mg/L	mg/d			
5M. Chromium, Total (7440-47-3)		X		0.040	10.0						mg/L	mg/d			
6M. Copper, Total (7440-50-8)		X		0.031	29.3						mg/L	mg/d			
7M. Lead, Total (7439-92-1)			X	< 0.05	< 47.3						mg/L	mg/d			
8M. Mercury, Total (7439-97-6)			X	< .0002	< 0.2						mg/L	mg/d			
9M. Nickel, Total (7440-02-0)		X		0.06	56.8						mg/L	mg/d			
10M. Selenium, Total (7782-49-2)			X	< 0.001	< 0.9						mg/L	mg/d			
11M. Silver, Total (7440-22-4)			X	< 0.01	< 9.5						mg/L	mg/d			
12M. Thallium, Total (7440-28-0)			X	< 0.4	< 378.5						mg/L	mg/d			
13M. Zinc, Total (7440-66-6)		X		0.043	40.7						mg/L	mg/d			
14M. Cyanide, Total (57-12-5)			X	< 0.01	< 9.5						mg/L	mg/d			
15M. Phenols, Total			X	< 0.01	< 9.5						mg/L	mg/d			
DIOXIN															
2,3,7,8-Tetra chlorodibenzo P Dioxin (1764-01-6)			X	DESCRIBE RESULTS											

1. POLLUTANT AND CAS NUMBER (if available)	2. MARK 'X' a. TESTING REQUIRED	b. BELIEVED PRESENT	c. BELIEVED ABSENT	3. EFFLUENT a. MAXIMUM DAILY VALUE (1) CONCENTRATION	(2) MASS	b. MAXIMUM 30 DAY VALUE (if available) (1) CONCENTRATION	(2) MASS	c. LONG TERM AVRG. VALUE (if available) (1) CONCENTRATION	(2) MASS	d. NO. OF ANALYSES	4. UNITS a. CONCENTRATION	b. MASS	5. INTAKE (optional) a. LONG TERM AVERAGE VALUE (1) CONCENTRATION	(2) MASS	b. NO. ANALYSES
GC/MS FRACTION – VOLATILE COMPOUNDS															
1V. Acrolein (107-02-8)			X												
2V. Acrylonitrile (107-13-1)			X												
3V. Benzene (71-43-2)			X	< 0.005	< 4.7						mg/L	mg/d			
4V. Bis (Chloromethyl) Ether (542-88-1)			X												
5V. Bromoform (75-25-2)			X	< 0.005	< 4.7						mg/L	mg/d			
6V. Carbon Tetrachloride (56-23-5)			X	< 0.005	< 4.7						mg/L	mg/d			
7V. Chlorobenzene (108-90-7)			X	< 0.005	< 4.7						mg/L	mg/d			
8V. Chlorodibromomethane (124-48-1)			X	< 0.005	< 4.7						mg/L	mg/d			
9V. Chloroethane (75-00-3)			X	< 0.01	< 9.5						mg/L	mg/d			
10V. 2-Chloroethylvinyl Ether (110-75-8)			X												
11V. Chloroform (67-66-3)			X	< 0.005	< 4.7						mg/L	mg/d			
12V. Dichlorobromomethane (75-27-4)			X	< 0.005	< 4.7						mg/L	mg/d			
13V. Dichlorodifluoromethane (75-71-8)			X												
14V. 1,1-Dichloroethane (75-34-3)			X	< 0.005	< 4.7						mg/L	mg/d			
15V. 1,2-Dichloroethane (107-06-2)			X	< 0.005	< 4.7						mg/L	mg/d			
16V. 1,1-Dichloroethylene (75-35-4)			X	< 0.005	< 4.7						mg/L	mg/d			
17V. 1,2-Dichloropropane (78-87-5)			X	< 0.005	< 4.7						mg/L	mg/d			
18V. 1,3-Dichloropropylene (542-75-6)			X												
19V. Ethylbenzene (100-41-4)			X	< 0.005	< 4.7						mg/L	mg/d			
20V. Methyl Bromide (74-83-9)			X	< 0.01	< 9.5						mg/L	mg/d			
21V. Methyl Chloride (74-87-3)			X	< 0.01	< 9.5						mg/L	mg/d			

CONTINUE ON PAGE

Form Approved.
OMB No. 2040-0086
Approval expires 7-31-88

EPA I.D. NUMBER (copy from Item 1 of Form 1) Nm 0890010515 | OUTFALL NUMBER 04A-156

CONTINUED FROM PAGE V-4

1. POLLUTANT AND CAS NUMBER (if available)	2. MARK 'X' a. TESTING REQUIRED	b. BELIEVED PRESENT	c. BELIEVED ABSENT	3. EFFLUENT a. MAXIMUM DAILY VALUE (1) CONCENTRATION	(2) MASS	b. MAXIMUM 30 DAY VALUE (if available) (1) CONCENTRATION	(2) MASS	c. LONG TERM AVRG. VALUE (if available) (1) CONCENTRATION	(2) MASS	d. NO. OF ANALYSES	4. UNITS a. CONCENTRATION	b. MASS	5. INTAKE (optional) a. LONG TERM AVERAGE VALUE (1) CONCENTRATION	(2) MASS	b. NO. OF ANALYSES
GC/MS FRACTION – VOLATILE COMPOUNDS (continued)															
22V. Methylene Chloride (75 09 2)			X	< 0.005	< 4.7						mg/L	mg/d			
23V. 1,1,2,2-Tetrachloroethane (79 34 5)			X	< 0.005	< 4.7						mg/L	mg/d			
24V. Tetrachloroethylene (127 18 4)			X	< 0.005	< 4.7						mg/L	mg/d			
25V. Toluene (108 88 3)			X	< 0.005	< 4.7						mg/L	mg/d			
26V. 1,2 Trans-Dichloroethylene (156 60 5)			X	< 0.005	< 4.7						mg/L	mg/d			
27V. 1,1,1 Trichloroethane (71 55 6)			X	< 0.005	< 4.7						mg/L	mg/d			
28V. 1,1,2 Trichloroethane (79 00 5)			X	< 0.005	< 4.7						mg/L	mg/d			
29V. Trichloroethylene (79 01-6)			X	< 0.005	< 4.7						mg/L	mg/d			
30V. Trichlorofluoromethane (75 69 4)			X	< 0.005	< 4.7						mg/L	mg/d			
31V. Vinyl Chloride (75 01-4)			X	< 0.01	< 9.5						mg/L	mg/d			
GC/MS FRACTION – ACID COMPOUNDS															
1A. 2 Chlorophenol (95 57 8)			X	< 0.01	< 9.5						mg/L	mg/d			
2A. 2,4 Dichlorophenol (120 83 2)			X	< 0.01	< 9.5						mg/L	mg/d			
3A. 2 4 Dimethyl phenol (105 67 9)			X	< 0.01	< 9.5						mg/L	mg/d			
4A. 4 6 Dinitro O-Cresol (534 52 1)			X	< 0.01	< 9.5						mg/L	mg/d			
5A. 2,4 Dinitrophenol (51 28 5)			X	< 0.01	< 9.5						mg/L	mg/d			
6A. 2 Nitrophenol (88 75 5)			X	< 0.01	< 9.5						mg/L	mg/d			
7A. 4 Nitrophenol (100 02 7)			X	< 0.01	< 9.5						mg/L	mg/d			
8A. P-Chloro M-Cresol (59 50 7)			X	< 0.01	< 9.5						mg/L	mg/d			
9A. Pentachloro phenol (87 86 5)			X	< 0.01	< 9.5						mg/L	mg/d			
10A. Phenol (108 95 2)			X	< 0.01	< 9.5						mg/L	mg/d			
11A. 2,4,6-Trinitrophenol															

1. POLLUTANT AND CAS NUMBER (if available)	2. MARK 'X' a. TREATMENT REQUIREMENTS	b. BELIEVED PRESENT	c. BELIEVED ABSENT	3. EFFLUENT a. MAXIMUM DAILY VALUE (1) CONCENTRATION	(2) MASS	b. MAXIMUM 30 DAY VALUE (if available) (1) CONCENTRATION	(2) MASS	c. LONG TERM AVRG. VALUE (if available) (1) CONCENTRATION	(2) MASS	d. NO. OF ANALYSES	4. UNITS a. CONCENTRATION	b. MASS	5. INTAKE (optional) a. LONG TERM AVERAGE VALUE (1) CONCENTRATION	(2) MASS	b. NO. OF ANALYSES
GC/MS FRACTION - BASE/NEUTRAL COMPOUNDS															
1B. Acenaphthene (83-32-9)			X	< 0.01	< 9.5						mg/L	mg/d			
2B. Acenaphtylene (208-96-8)			X	< 0.01	< 9.5						mg/L	mg/d			
3B. Anthracene (120-12-7)			X	< 0.01	< 9.5						mg/L	mg/d			
4B. Benzidine (92-87-5)			X	< 0.01	< 9.5						mg/L	mg/d			
5B. Benzo *(a)* Anthracene (56-55-3)			X	< 0.01	< 9.5						mg/L	mg/d			
6B. Benzo *(a)* Pyrene (50-32-8)			X	< 0.01	< 9.5						mg/L	mg/d			
7B. 3,4 Benzo-fluoranthene (205-99-2)			X	< 0.01	< 9.5						mg/L	mg/d			
8B. Benzo *(ghi)* Perylene (191-24-2)			X	< 0.01	< 9.5						mg/L	mg/d			
9B. Benzo *(k)* Fluoranthene (207-08-9)			X	< 0.01	< 9.5						mg/L	mg/d			
10B. Bis *(2-Chloro-ethoxy)* Methane (111-91-1)			X	< 0.01	< 9.5						mg/L	mg/d			
11B. Bis *(2 Chloro-ethyl)* Ether (111-44-4)			X	< 0.01	< 9.5						mg/L	mg/d			
12B. Bis *(2 Chloroiso-propyl)* Ether (102-60-1)			X	< 0.01	< 9.5						mg/L	mg/d			
13B. Bis *(2 Ethyl hexyl)* Phthalate (117-81-7)			X	< 0.01	< 9.5						mg/L	mg/d			
14B. 4 Bromo-phenyl Phenyl Ether (101-55-3)			X	< 0.01	< 9.5						mg/L	mg/d			
15B. Butyl Benzyl Phthalate (85-68-7)			X	< 0.01	< 9.5						mg/L	mg/d			
16B. 2-Chloro-naphthalene (91-58-7)			X	< 0.01	< 9.5						mg/L	mg/d			
17B. 4 Chloro-phenyl Phenyl Ether (7005-72-3)			X	< 0.01	< 9.5						mg/L	mg/d			
18B. Chrysene (218-01-9)			X	< 0.01	< 9.5						mg/L	mg/d			
19B. Dibenzo *(a,h)* Anthracene (53-70-3)			X	< 0.01	< 9.5						mg/L	mg/d			
20B. 1,2 Dichloro-benzene (95-50-1)			X	< 0.01	< 9.5						mg/L	mg/d			
21B. 1,3-Dichloro-benzene (541-73-1)			X	< 0.01	< 9.5						mg/L	mg/d			

CONTINUED FROM PAGE V-6

EPA I.D. NUMBER (copy from Item 1 of Form 1): NM 0890010515
OUTFALL NUMBER: 04A-156

Form Approved
OMB No. 2040-0086
Approval expires 7-31-88

1. POLLUTANT AND CAS NUMBER (if available)	2. MARK 'X' a. TEST INCLUDED	b. BELIEVED PRESENT	c. BELIEVED ABSENT	3. EFFLUENT a. MAXIMUM DAILY VALUE (1) CONCENTRATION	(2) MASS	b. MAXIMUM 30 DAY VALUE (if available) (1) CONCENTRATION	(2) MASS	c. LONG TERM AVRG. VALUE (if available) (1) CONCENTRATION	(2) MASS	d. NO. OF ANALYSES	4. UNITS a. CONCENTRATION	b. MASS	5. INTAKE (optional) a. LONG TERM AVERAGE VALUE (1) CONCENTRATION	(2) MASS	b. NO. OF ANALYSES
GC/MS FRACTION – BASE/NEUTRAL COMPOUNDS (continued)															
22B. 1,4-Dichlorobenzene (106-46-7)			X	< 0.01	< 9.5						mg/L	mg/d			
23B. 3,3' Dichlorobenzidine (91-94-1)			X	< 0.01	< 9.5						mg/L	mg/d			
24B. Diethyl Phthalate (84-66-2)			X	< 0.01	< 9.5						mg/L	mg/d			
25B. Dimethyl Phthalate (131-11-3)			X	< 0.01	< 9.5						mg/L	mg/d			
26B. Di-N-Butyl Phthalate (84-74-2)			X	< 0.01	< 9.5						mg/L	mg/d			
27B. 2,4-Dinitrotoluene (121-14-2)			X	< 0.01	< 9.5						mg/L	mg/d			
28B. 2,6 Dinitrotoluene (606-20-2)			X	< 0.01	< 9.5						mg/L	mg/d			
29B. Di-N Octyl Phthalate (117-84-0)			X	< 0.01	< 9.5						mg/L	mg/d			
30B. 1,2 Diphenylhydrazine (as Azobenzene) (122-66-7)			X	< 0.01	< 9.5						mg/L	mg/d			
31B. Fluoranthene (206-44-0)			X	< 0.01	< 9.5						mg/L	mg/d			
32B. Fluorene (86-73-7)			X	< 0.01	< 9.5						mg/L	mg/d			
33B. Hexachlorobenzene (118-74-1)			X	< 0.01	< 9.5						mg/L	mg/d			
34B. Hexachlorobutadiene (87-68-3)			X	< 0.01	< 9.5						mg/L	mg/d			
35B. Hexachlorocyclopentadiene (77-47-4)			X	< 0.01	< 9.5						mg/L	mg/d			
36B. Hexachloroethane (67-72-1)			X	< 0.01	< 9.5						mg/L	mg/d			
37B. Indeno (1,2,3-cd) Pyrene (193-39-5)			X	< 0.01	< 9.5						mg/L	mg/d			
38B. Isophorone (78-59-1)			X	< 0.01	< 9.5						mg/L	mg/d			
39B. Naphthalene (91-20-3)			X	< 0.01	< 9.5						mg/L	mg/d			
40B. Nitrobenzene (98-95-3)			X	< 0.01	< 9.5						mg/L	mg/d			
41B. N-Nitrosodimethylamine (62-75-9)			X	< 0.01	< 9.5						mg/L	mg/d			
42B. N-Nitrosodi-N-Propylamine (621-64-7)															

CONTINUED FROM THE FRONT

1. POLLUTANT AND CAS NUMBER (if available)	2. MARK "X" a. TEST BUT NOT REQUIRED	b. BELIEVED PRESENT	c. BELIEVED ABSENT	3. EFFLUENT a. MAXIMUM DAILY VALUE (1) CONCENTRATION	(2) MASS	b. MAXIMUM 30 DAY VALUE (if available) (1) CONCENTRATION	(2) MASS	c. LONG TERM AVRG. VALUE (if available) (1) CONCENTRATION	(2) MASS	d. NO. OF ANALYSES	4. UNITS a. CONCENTRATION	b. MASS	5. INTAKE (optional) a. LONG TERM AVERAGE VALUE (1) CONCENTRATION	(2) MASS	b. NO. ANALYSES
GC/MS FRACTION – BASE/NEUTRAL COMPOUNDS *(continued)*															
43B. N-Nitrosodiphenylamine (86-30-6)			X	< 0.01	< 9.5						mg/L	mg/d			
44B. Phenanthrene (85-01-8)			X	< 0.01	< 9.5						mg/L	mg/d			
45B. Pyrene (129-00-0)			X	< 0.01	< 9.5						mg/L	mg/d			
46B. 1,2,4-Trichlorobenzene (120-82-1)			X	< 0.01	< 9.5						mg/L	mg/d			
GC/MS FRACTION – PESTICIDES															
1P. Aldrin (309-00-2)			X	< .00006	< 0.1						mg/L	mg/d			
2P. α-BHC (319-84-6)			X	< .0002	< 0.2						mg/L	mg/d			
3P. β-BHC (319-85-7)			X	< .0001	< 0.1						mg/L	mg/d			
4P. γ-BHC (58-89-9)			X	< .00003	< 0.0						mg/L	mg/d			
5P. δ-BHC (319-86-8)			X	< .00012	< 0.1						mg/L	mg/d			
6P. Chlordane (57-74-9)			X	< .00025	< 0.2						mg/L	mg/d			
7P. 4,4'-DDT (50-29-3)			X	< .00006	< 0.1						mg/L	mg/d			
8P. 4,4'-DDE (72-55-9)			X	< .00008	< 0.1						mg/L	mg/d			
9P. 4,4'-DDD (72-54-8)			X	< .00008	< 0.1						mg/L	mg/d			
10P. Dieldrin (60-57-1)			X	< .00008	< 0.1						mg/L	mg/d			
11P. α-Endosulfan (115-29-7)			X	< .00005	< 0.0						mg/L	mg/d			
12P. β-Endosulfan (115-29-7)			X	< .00008	< 0.1						mg/L	mg/d			
13P. Endosulfan Sulfate (1031-07-8)			X	< .00009	< 0.1						mg/L	mg/d			
14P. Endrin (72-20-8)			X	< .00006	< 0.1						mg/L	mg/d			
15P. Endrin Aldehyde (7421-93-4)			X	< .00062	< 0.6						mg/L	mg/d			
16P. Heptachlor (76-44-8)			X	< .00003	< 0.0						mg/L	mg/d			

CONTINUE ON PAGE

Form Approved
OMB No. 2040-0086
Approval expires 7-31-88

EPA I.D. NUMBER (copy from Item 1 of Form 1)	OUTFALL NUMBER
NM 0890010515	04A-156

CONTINUED FROM PAGE V-8

1. POLLUTANT AND CAS NUMBER (if available)	2. MARK "X" a. TEST INCLUDED	b. BELIEVED PRESENT	c. BELIEVED ABSENT	3. EFFLUENT a. MAXIMUM DAILY VALUE (1) CONCENTRATION	(2) MASS	b. MAXIMUM 30 DAY VALUE (if available) (1) CONCENTRATION	(2) MASS	c. LONG TERM AVRG. VALUE (if available) (1) CONCENTRATION	(2) MASS	d. NO. OF ANALYSES	4. UNITS a. CONCENTRATION	b. MASS	5. INTAKE (optional) a. LONG TERM AVERAGE VALUE (1) CONCENTRATION	(2) MASS	b. NO. OF ANALYSES
GC/MS FRACTION – PESTICIDES (continued)															
17P. Heptachlor Epoxide (1024-57-3)			X	< .00004	< 0.0						mg/L	mg/d			
18P. PCB-1242 (53469-21-9)			X	< .00068	< 0.6						mg/L	mg/d			
19P. PCB-1254 (11097-69-1)			X	< .00068	< 0.6						mg/L	mg/d			
20P. PCB-1221 (11104-28-2)			X												
21P. PCB-1232 (11141-16-5)			X												
22P. PCB-1248 (12672-29-6)			X												
23P. PCB-1260 (11096-82-5)			X	< .00068	< 0.6						mg/L	mg/d			
24P. PCB-1016 (12674-11-2)			X												
25P. Toxaphene (8001-35-2)			X	< .0025	< 2.4						mg/L	mg/d			

SCHEMATIC OF WATER FLOW

OUTFALL 04A141

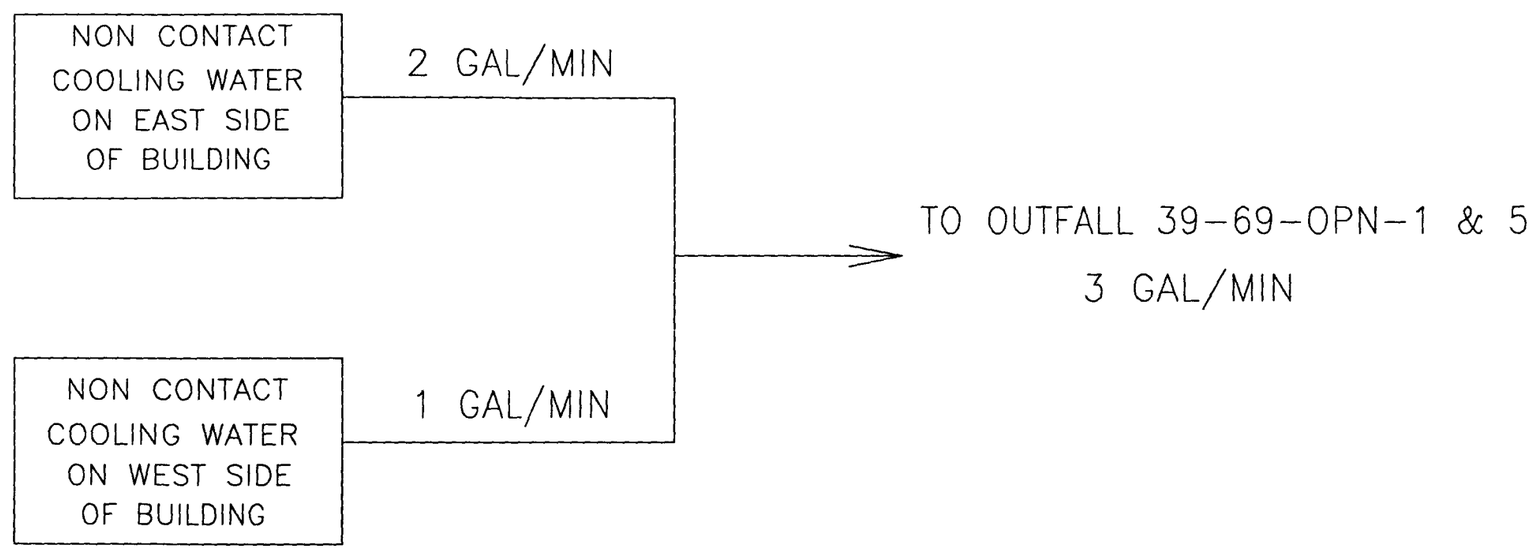

SCHEMATIC OF WATER FLOW

OUTFALL 04A147

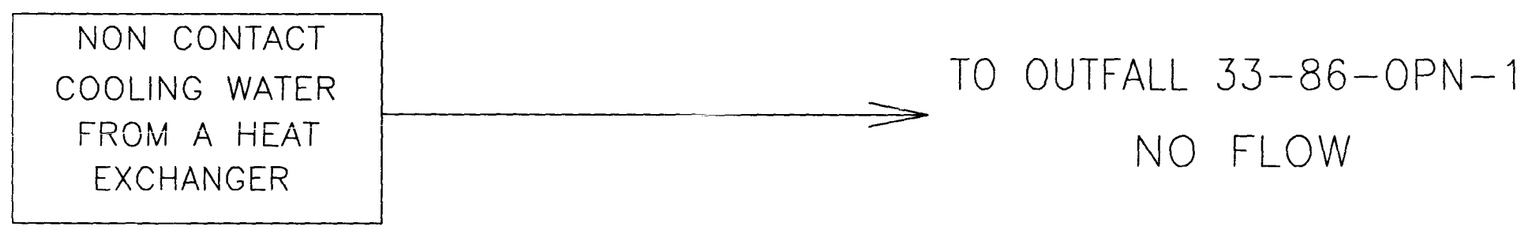

SCHEMATIC OF WATER FLOW

OUTFALL 04A156

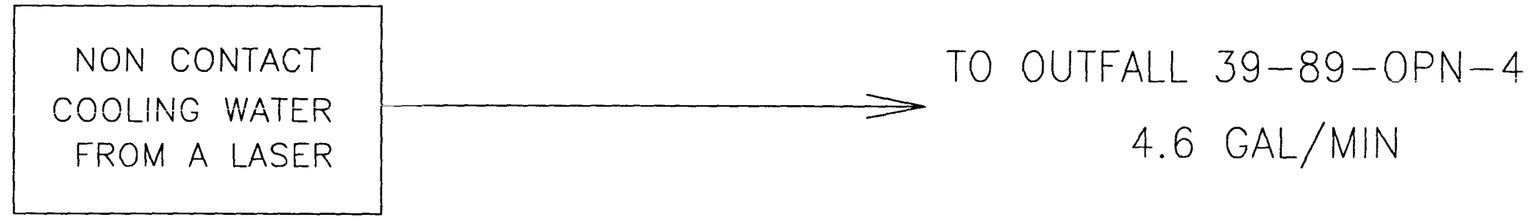

Please type or print in the unshaded areas only

EPA ID Number (copy from Item 1 of Form 1) NM0890010515

Form Approved
OMB No. 2040-0086
Approval expires 7-31-88

Form 2D NPDES

EPA New Sources and New Dischargers Application for Permit to Discharge Process Wastewater

I. Outfall Location

For each outfall, list the latitude and longitude, and the name of the receiving water.

Outfall Number (list)	Latitude Deg	Latitude Min	Latitude Sec	Longitude Deg	Longitude Min	Longitude Sec	Receiving Water (name)
39-2-OPN-	35	46	19	106	15	3	CHAQUEHUI CANYON
1A (06A)							
39-2-OPN	35	46	19	106	15	3	CHAQUEHUI CANYON
-1B(04A)							

II. Discharge Date (When do you expect to begin discharging?)

PRESENTLY

III. Flows, Sources of Pollution, and Treatment Technologies

A. For each outfall, provide a description of (1) All operations contributing wastewater to the effluent, including process wastewater, sanitary wastewater, cooling water, and stormwater runoff; (2) The average flow contributed by each operation; and (3) The treatment received by the wastewater. Continue on additional sheets if necessary.

Outfall Number	1. Operations Contributing Flow (list)	2. Average Flow (include units)	3. Treatment (Description or List Codes from Table 2D-1)
39-2-OPN-	TWO PHOTO DARK ROOMS	3 GPM	NONE
1A			
39-2-OPN-	NON CONTACT COOLING	4 GPM	NONE
1B	WATER TO AN X-RAY		
	MACHINE		

B. Attach a line drawing showing the water flow through the facility. Indicate sources of intake water, operations contributing wastewater to the effluent, and treatment units labeled to correspond to the more detailed descriptions in Item III-A. Construct a water balance on the line drawing by showing average flows between intakes, operations, treatment units, and outfalls. If a water balance cannot be determined (e.g., for certain mining activities), provide a pictorial description of the nature and amount of any sources of water and any collection or treatment measures.

C. Except for storm runoff, leaks, or spills, will any of the discharges described in item III-A be intermittent or seasonal?

☒ Yes *(complete the following table)* ☐ No *(go to item IV)*

Outfall Number	1. Frequency		2. Flow		
	a. Days Per Week *(specify average)*	b. Months Per Year *(specify average)*	a. Maximum Daily Flow Rate *(in mgd)*	b. Maximum Total Volume *(specify with units)*	c. Duration *(in days)*
39-2-OPN-1A	2	12	.00036	360 GPD	2D/WK

IV. Production

If there is an applicable production-based effluent guideline or NSPS, for each outfall list the estimated level of production (projection of actual production level, not design), expressed in the terms and units used in the applicable effluent guideline or NSPS, for each of the first 3 years of operation. If production is likely to vary, you may also submit alternative estimates (attach a separate sheet).

Year	a. Quantity Per Day	b. Units of Measure	c. Operation, Product, Material, etc *(specify)*

 CONTINUE ON NEXT PAGE

...THE FRONT	EPA ID Number *(copy from Item 1 of Form 1)*	Outfall Number
	NM0890010515	39-2-OPN-1A & 1B

V. Effluent Characteristics

A, and B: These items require you to report estimated amounts *(both concentration and mass)* of the pollutants to be discharged from each of your outfalls. Each part of this item addresses a different set of pollutants and should be completed in accordance with the specific instructions for that part. Data for each outfall should be on a separate page. Attach additional sheets of paper if necessary.

General Instructions *(See table 2D-2 for Pollutants)*

Each part of this item requests you to provide an estimated daily maximum and average for certain pollutants and the source of information. Data for all pollutants in Group A, for all outfalls, must be submitted unless waived by the permitting authority. For all outfalls, data for pollutants in Group B should be reported only for pollutants which you believe will be present or are limited directly by an effluent limitations guideline or NSPS or indirectly through limitations on an indicator pollutant.

1. Pollutant	2. Maximum Daily Value *(include units)*	3. Average Daily Value *(include units)*	4. Source *(see instructions)*
NA			

C. Use the space below to list any of the pollutants listed in Table 2D-3 of the instructions which you know or have reason to believe will be discharged from any outfall. For every pollutant you list, briefly describe the reasons you believe it will be present.

1. Pollutant	2. Reason for Discharge
NA	

VI. Engineering Report on Wastewater Treatment

A. If there is any technical evaluation concerning your wastewater treatment, including engineering reports or pilot plant studies, check the appropriate box below.

☐ Report Available ☒ No Report

B. Provide the name and location of any existing plant(s) which, to the best of your knowledge, resembles this production facility with respect to production processes, wastewater constituents, or wastewater treatments.

Name	Location
NA	

CONTINUE ON NEXT PAGE

EPA ID Number *(copy from item one of Form 1)*
NM0890010515

VII. Other Information *(Optional)*

Use the space below to expand upon any of the above questions or to bring to the attention of the reviewer any other information you feel should be considered in establishing permit limitations for the proposed facility. Attach additional sheets if necessary.

NA

VIII. Certification

I certify under penalty of law that this document and all attachments were prepared under my direction or supervision in accordance with a system designed to assure that qualified personnel properly gather and evaluate the information submitted. Based on my inquiry of the person or persons who manage the system, or those persons directly responsible for gathering the information, the information submitted is, to the best of my knowledge and belief, true, accurate, and complete. I am aware that there are significant penalties for submitting false information, including the possibility of fine and imprisonment for knowing violations.

A. Name and Official Title *(type or print)*	B. Phone No.
C. Signature	D. Date Signed

☆ U.S. Government Printing Office : 1986 -491-191/52940

SCHEMATIC OF WATER FLOW

FROM TA 39-2 DARK ROOMS

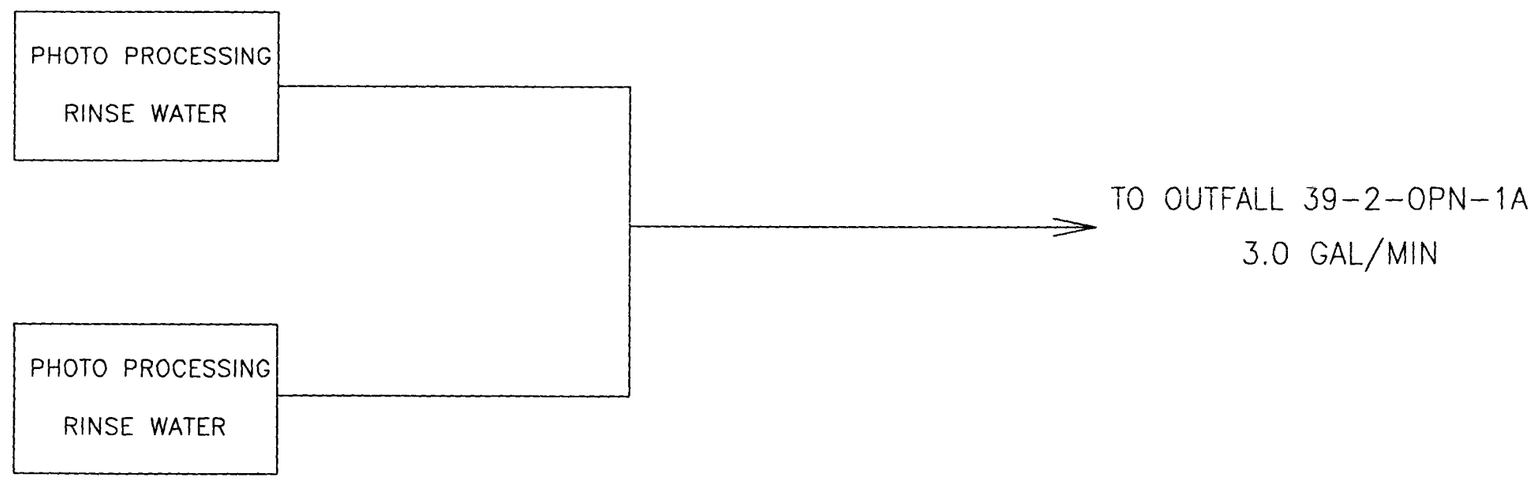

SCHEMATIC OF WATER FLOW

X-RAY MACHINE

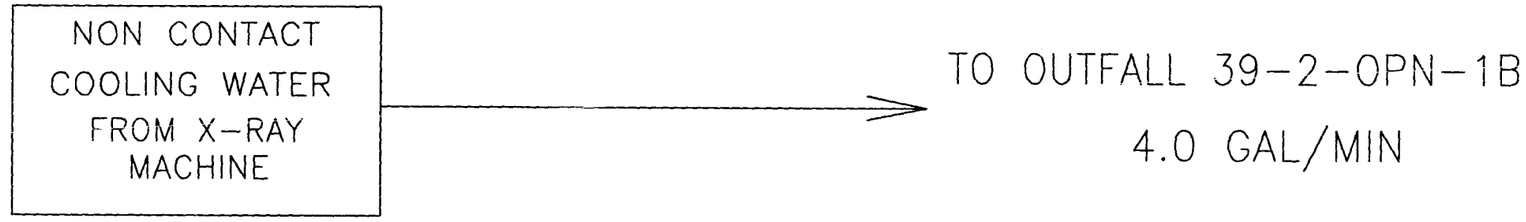

DYE STUDY INFORMATION

BUILDING NUMBER	DRAIN NUMBER	DID DYE REACH EXPECTED DESTINATION?	COMMENTS
49-115	1LV1	YES	
49-115	1S1	YES	
69-1	1T1	YES	
69-2	1T1	YES	
69-8	1FD1	YES	

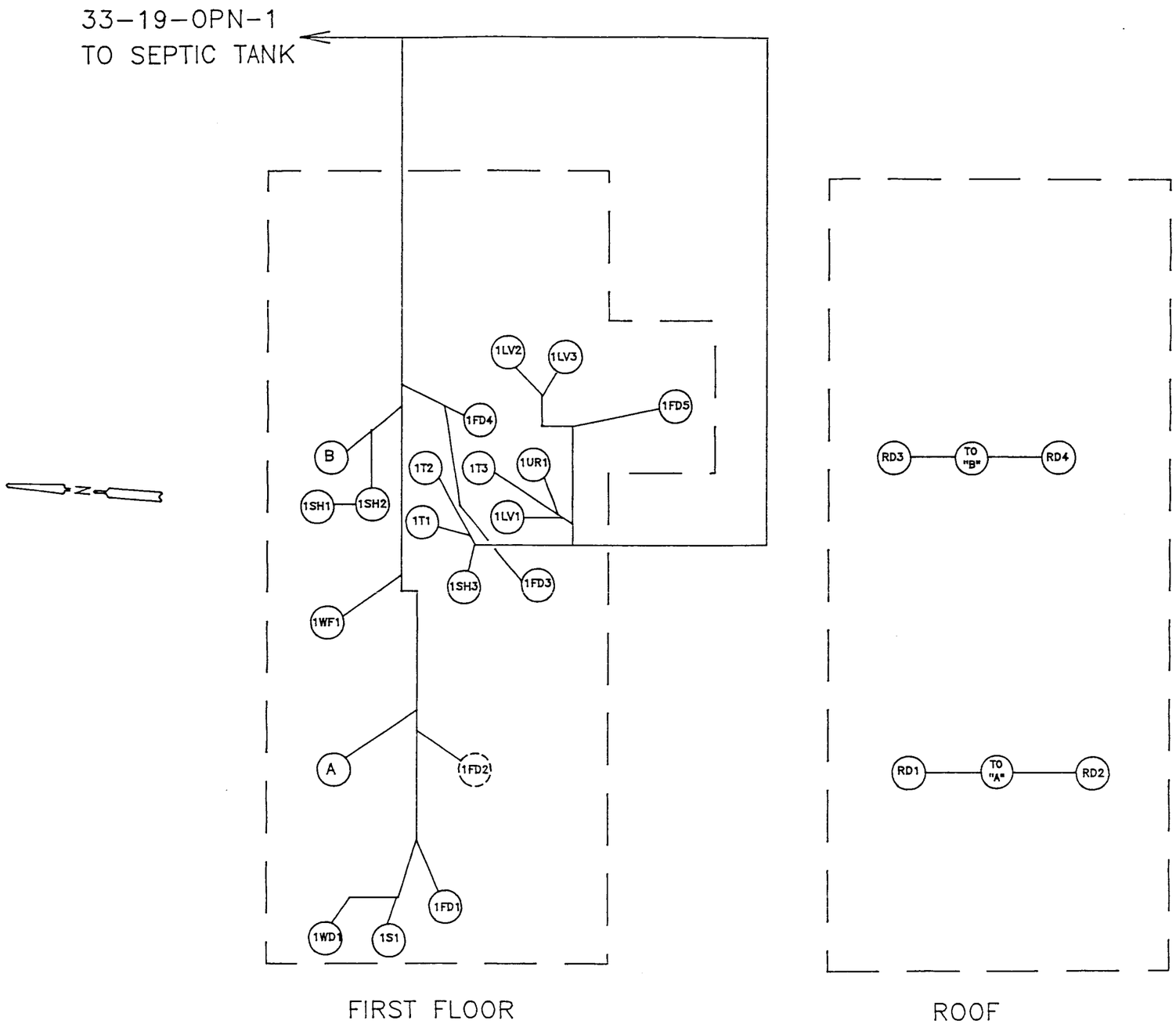

NOTES

NOTE 1: SCHEMATIC BASED ON DRAWINGS C-11526, C-11527, C-11584, C-11585 & R-3022 AND SITE VISIT

NOTE 2: DASHED CIRCLES ARE COVERED DRAINS

LEGEND

FD – FLOOR DRAIN

LV – LAVATORY

S – SINK

SH – SHOWER

T – TOILET

UR – URINAL

WD – WASTE DRAIN

WF – WATER FOUNTAIN

SANTA FE ENGINEERING, LTD.		
TA 33-19 BUILDING DRAIN SCHEMATIC	DRAWN	PEB
	DESIGN	PEB
	CHECKED	LBA
	RELEASED	
	DATE	12/17/91
SUBMITTED	RECOMMENDED	APPROVED
Los Alamos — Los Alamos National Laboratory, Los Alamos, New Mexico 87545	SHEET	OF
CLASSIFICATION	REVIEWER	DATE
REQUESTING DIVISION	LAB JOB NO.	DRAWING NO. FIGURE 1 — REV.
REQUESTING GROUP		

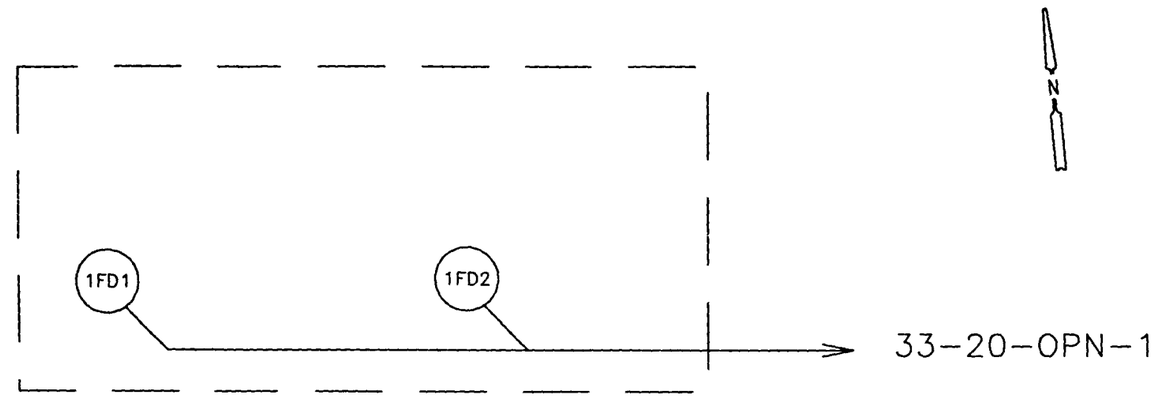

NOTES

NOTE 1: SCHEMATIC BASED ON DRAWINGS C-11538, C-11588 & R-3023 AND SITE VISIT

LEGEND

FD - FLOOR DRAIN

SANTA FE ENGINEERING, LTD.		
TA 33-20 BUILDING DRAIN SCHEMATIC	DRAWN	PEB
	DESIGN	PEB
	CHECKED	LBA
	RELEASED	
	DATE	12/17/91
SUBMITTED	RECOMMENDED	APPROVED
Los Alamos — Los Alamos National Laboratory, Los Alamos, New Mexico 87545	SHEET	OF
CLASSIFICATION	REVIEWER	DATE
REQUESTING DIVISION / REQUESTING GROUP	LAB JOB NO.	DRAWING NO. FIGURE 2 / REV.

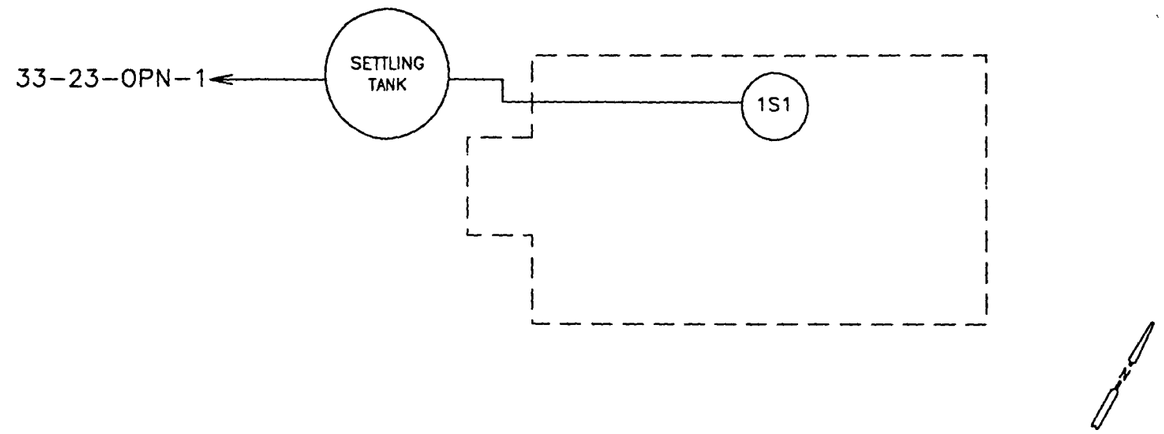

NOTES

NOTE 1: SCHEMATIC BASED ON DRAWINGS C-11549, C-11593 & R-3026 AND SITE VISIT

LEGEND

S – SINK

SANTA FE ENGINEERING, LTD.		
TA 33-23 BUILDING DRAIN SCHEMATIC	DRAWN	PEB
	DESIGN	PEB
	CHECKED	LBA
	RELEASED	
	DATE	12/17/91
SUBMITTED	RECOMMENDED	APPROVED
Los Alamos — Los Alamos National Laboratory, Los Alamos, New Mexico 87545	SHEET	OF
CLASSIFICATION	REVIEWER	DATE
REQUESTING DIVISION / REQUESTING GROUP	LAB JOB NO.	DRAWING NO. FIGURE 3 / REV.

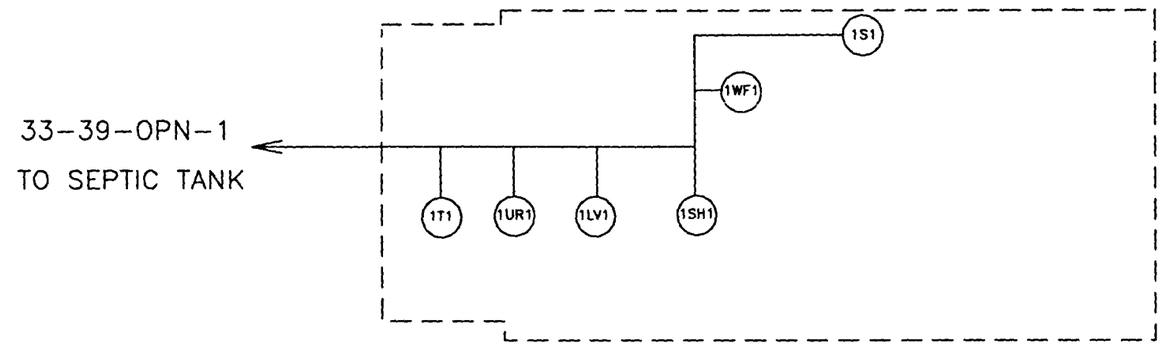

LEGEND

LV – LAVATORY

S – SINK

SH – SHOWER

T – TOILET

UR – URINAL

WF – WATER FOUNTAIN

NOTES

NOTE 1: SCHEMATIC BASED ON DRAWINGS C-1226, C-1238 & R-3033 AND SITE VISIT

SANTA FE ENGINEERING, LTD.

TA 33-39 BUILDING DRAIN SCHEMATIC

DRAWN	PEB
DESIGN	PEB
CHECKED	LBA
RELEASED	
DATE	12/17/91

SUBMITTED | RECOMMENDED | APPROVED

Los Alamos — Los Alamos National Laboratory, Los Alamos, New Mexico 87545

SHEET / OF

CLASSIFICATION | REVIEWER | DATE

REQUESTING DIVISION | LAB JOB NO. | DRAWING NO. FIGURE 4 | REV.

REQUESTING GROUP

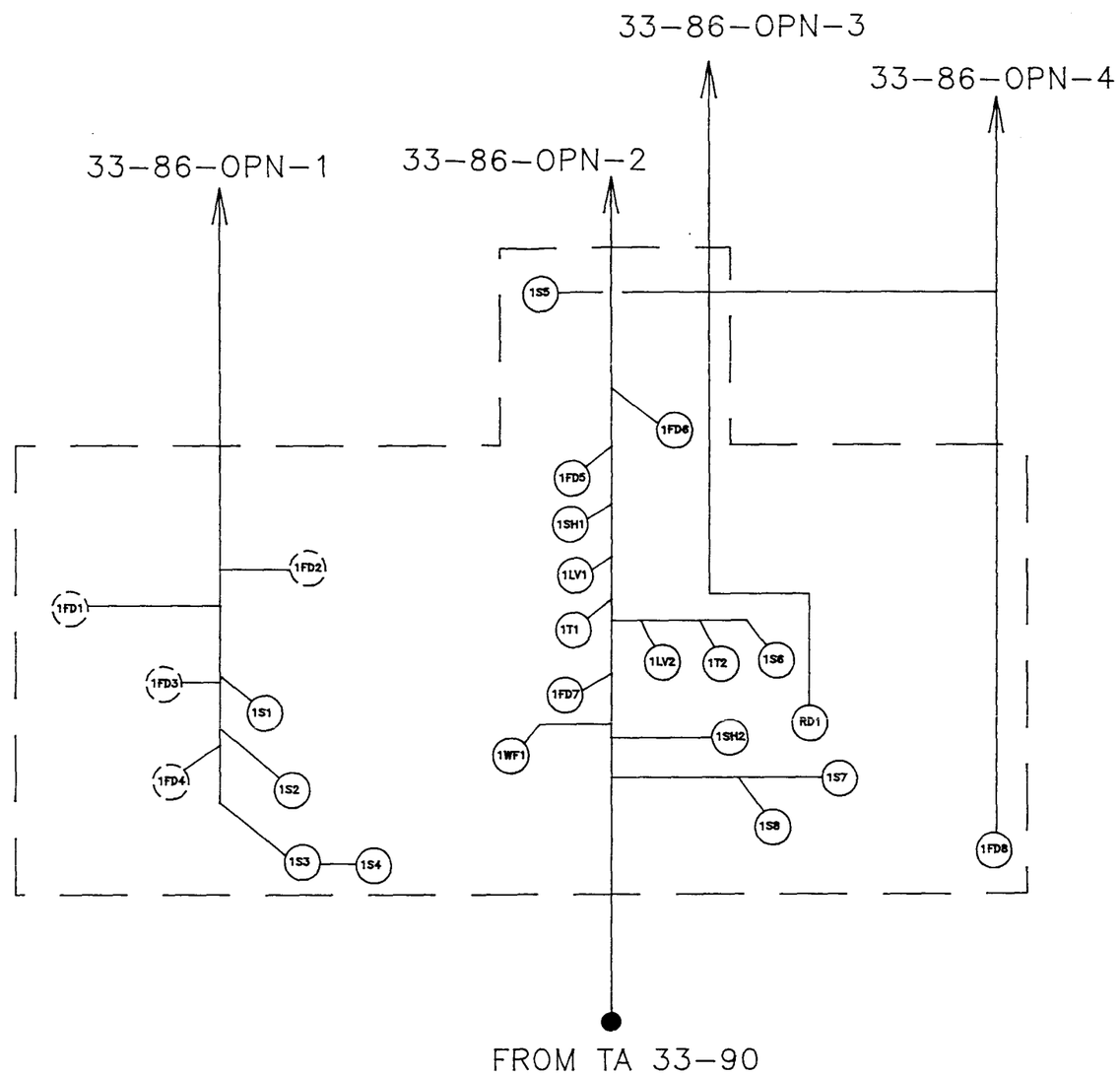

LEGEND

FD – FLOOR DRAIN

LV – LAVATORY

RD – ROOF DRAIN

S – SINK

SH – SHOWER

T – TOILET

WF – WATER FOUNTAIN

NOTES

NOTE 1: SCHEMATIC BASED ON DRAWINGS C-3303, C-3316, C-3358, C-3359, C-21399 & R-3035 AND SITE VISIT

NOTE 2: DASHED CIRCLES ARE COVERED WITH METAL PLATE

SANTA FE ENGINEERING, LTD.

TA 33-86 BUILDING
DRAIN SCHEMATIC

DRAWN	PEB
DESIGN	PEB
CHECKED	LBA
RELEASED	
DATE	1/14/92

SUBMITTED | RECOMMENDED | APPROVED

Los Alamos — Los Alamos National Laboratory, Los Alamos, New Mexico 87545

SHEET / OF

CLASSIFICATION | REVIEWER | DATE

REQUESTING DIVISION | LAB JOB NO. | DRAWING NO. FIGURE 5 | REV.

REQUESTING GROUP

NOTES

NOTE 1: SCHEMATIC BASED ON SITE VISIT

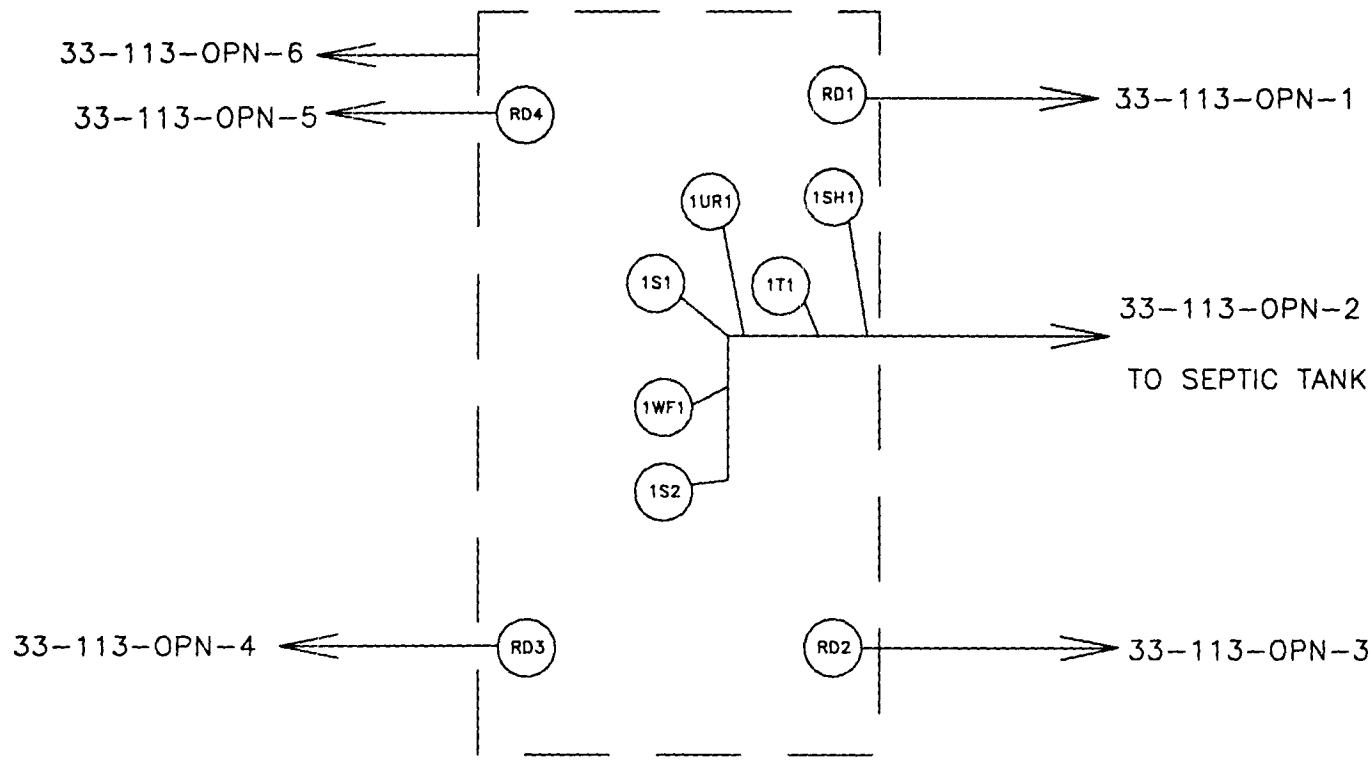

LEGEND

RD – ROOF DRAIN

S – SINK

SH – SHOWER

T – TOILET

UR – URINAL

WF – WATER FOUNTAIN

SANTA FE ENGINEERING, LTD.		
TA 33-113 BUILDING DRAIN SCHEMATIC	DRAWN	PEB
	DESIGN	PEB
	CHECKED	LBA
	RELEASED	
	DATE	12/19/91
SUBMITTED	RECOMMENDED	APPROVED
Los Alamos — Los Alamos National Laboratory, Los Alamos, New Mexico 87545	SHEET	OF
CLASSIFICATION	REVIEWER	DATE
REQUESTING DIVISION / REQUESTING GROUP	LAB JOB NO.	DRAWING NO. FIGURE 6 / REV.

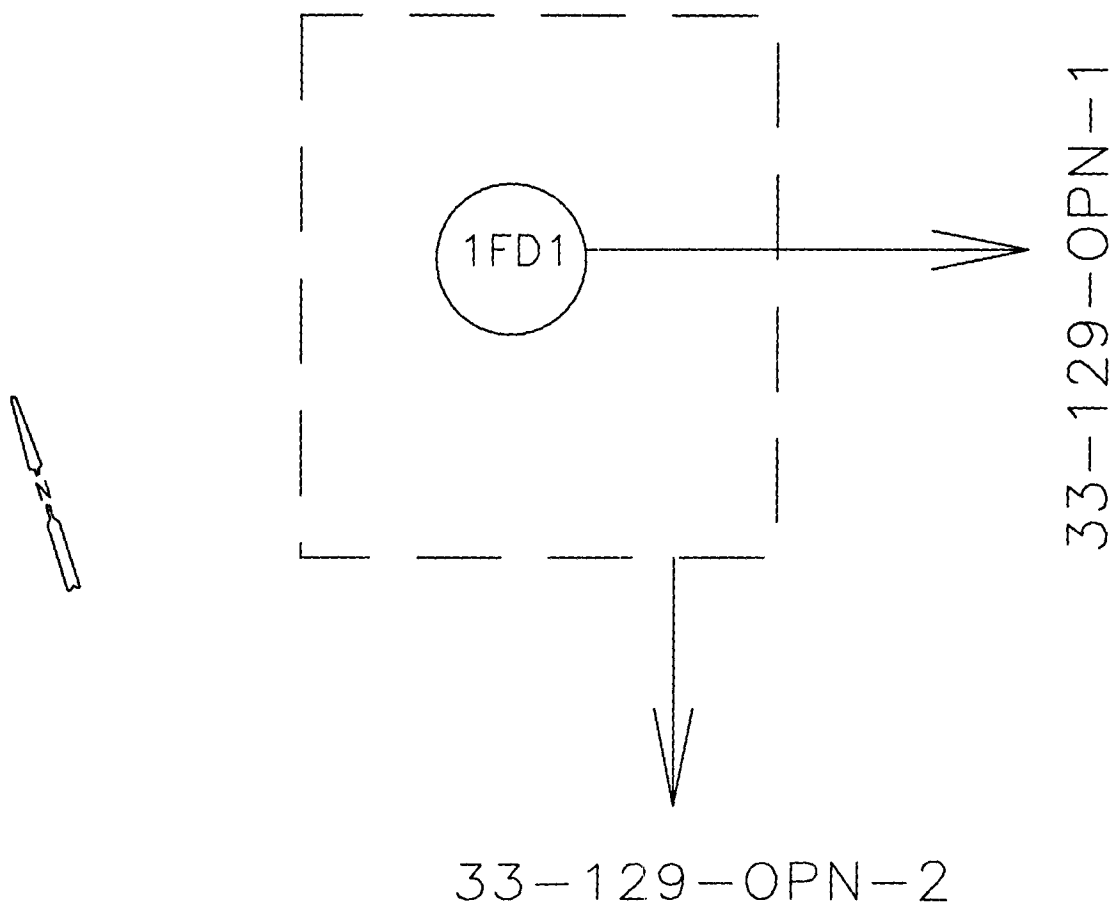

LEGEND

FD – FLOOR DRAIN

NOTES

NOTE 1: SCHEMATIC BASED ON SITE VISIT

SANTA FE ENGINEERING, LTD.		
TA 33-129 BUILDING DRAIN SUMMARY	DRAWN	PEB
	DESIGN	PEB
	CHECKED	LBA
	RELEASED	
	DATE	12/23/91
SUBMITTED	RECOMMENDED	APPROVED
Los Alamos — Los Alamos National Laboratory, Los Alamos, New Mexico 87545	SHEET	OF
CLASSIFICATION	REVIEWER	DATE
REQUESTING DIVISION / REQUESTING GROUP	LAB JOB NO.	DRAWING NO. FIGURE 8 / REV.

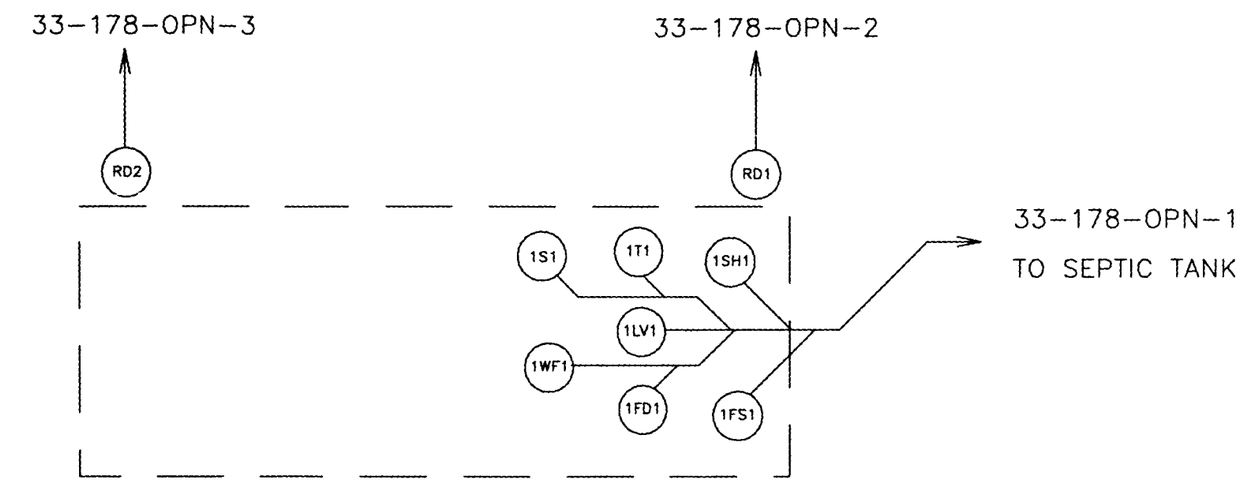

LEGEND

FD – FLOOR DRAIN
FS – FLOOR SINK
LV – LAVATORY
RD – ROOF DRAIN
S – SINK
SH – SHOWER
T – TOILET
WF – WATER FOUNTAIN

NOTES

NOTE 1: SCHEMATIC BASED SITE VISIT

SANTA FE ENGINEERING, LTD.

TA 33-178 BUILDING DRAIN SCHEMATIC

DRAWN	PEB
DESIGN	PEB
CHECKED	LBA
RELEASED	
DATE	12/23/91

SUBMITTED | RECOMMENDED | APPROVED

Los Alamos — Los Alamos National Laboratory, Los Alamos, New Mexico 87545

SHEET / OF

CLASSIFICATION | REVIEWER | DATE

REQUESTING DIVISION | LAB JOB NO. | DRAWING NO. FIGURE 9 | REV.

REQUESTING GROUP

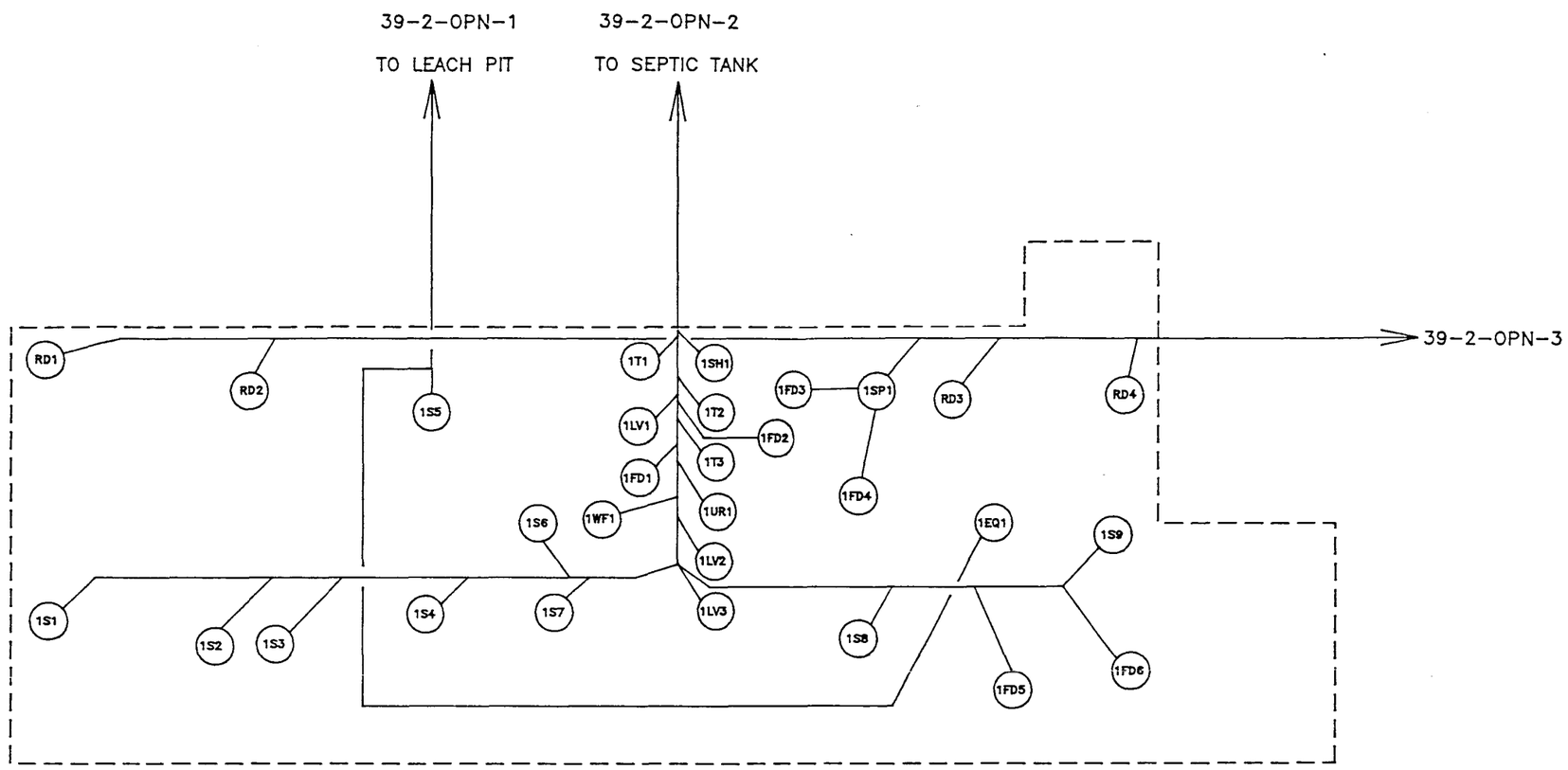

NOTES

NOTE 1: SCHEMATIC BASED DRAWING
C-11083, C-11089, C-11090,
C-11099, C-11100, C-42895 SHTS 1 & 7,
R-3103 AND SITE VISIT

LEGEND

EQ – EQUIPMENT DRAIN	SH – SHOWER
FD – FLOOR DRAIN	SP – SUMP PUMP
LV – LAVATORY	T – TOILET
RD – ROOF DRAIN	UR – URINAL
S – SINK	WF – WATER FOUNTAIN

SANTA FE ENGINEERING, LTD.

TA 39-2 BUILDING
DRAIN SCHEMATIC

DRAWN	PEB
DESIGN	PEB
CHECKED	LBA
RELEASED	
DATE	1/8/92

SUBMITTED | RECOMMENDED | APPROVED

Los Alamos — Los Alamos National Laboratory, Los Alamos, New Mexico 87545

SHEET / OF

CLASSIFICATION | REVIEWER | DATE

REQUESTING DIVISION | LAB JOB NO. | DRAWING NO. FIGURE 10 | REV.

REQUESTING GROUP

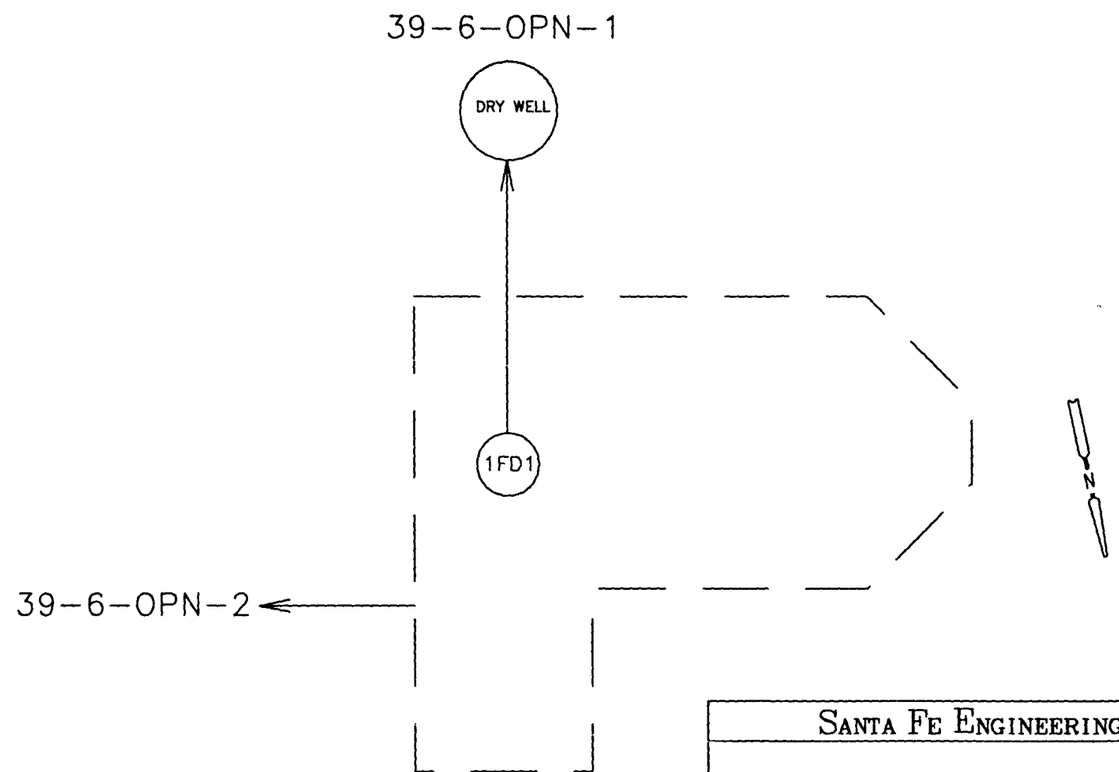

LEGEND

FD – FLOOR DRAIN

NOTES

NOTE 1: SCHEMATIC BASED DRAWINGS C-11124 & R-3107 AND SITE VISIT

SANTA FE ENGINEERING, LTD.

TA 39-6 BUILDING DRAIN SCHEMATIC

DRAWN	PEB
DESIGN	PEB
CHECKED	LBA
RELEASED	
DATE	12/23/91

SUBMITTED | RECOMMENDED | APPROVED

Los Alamos — Los Alamos National Laboratory, Los Alamos, New Mexico 87545

SHEET / OF

CLASSIFICATION | REVIEWER | DATE

REQUESTING DIVISION | LAB JOB NO. | DRAWING NO. FIGURE 11 | REV.

REQUESTING GROUP

NOTES

NOTE 1: SCHEMATIC BASED DRAWINGS
C-11124 & R-3108 AND SITE VISIT

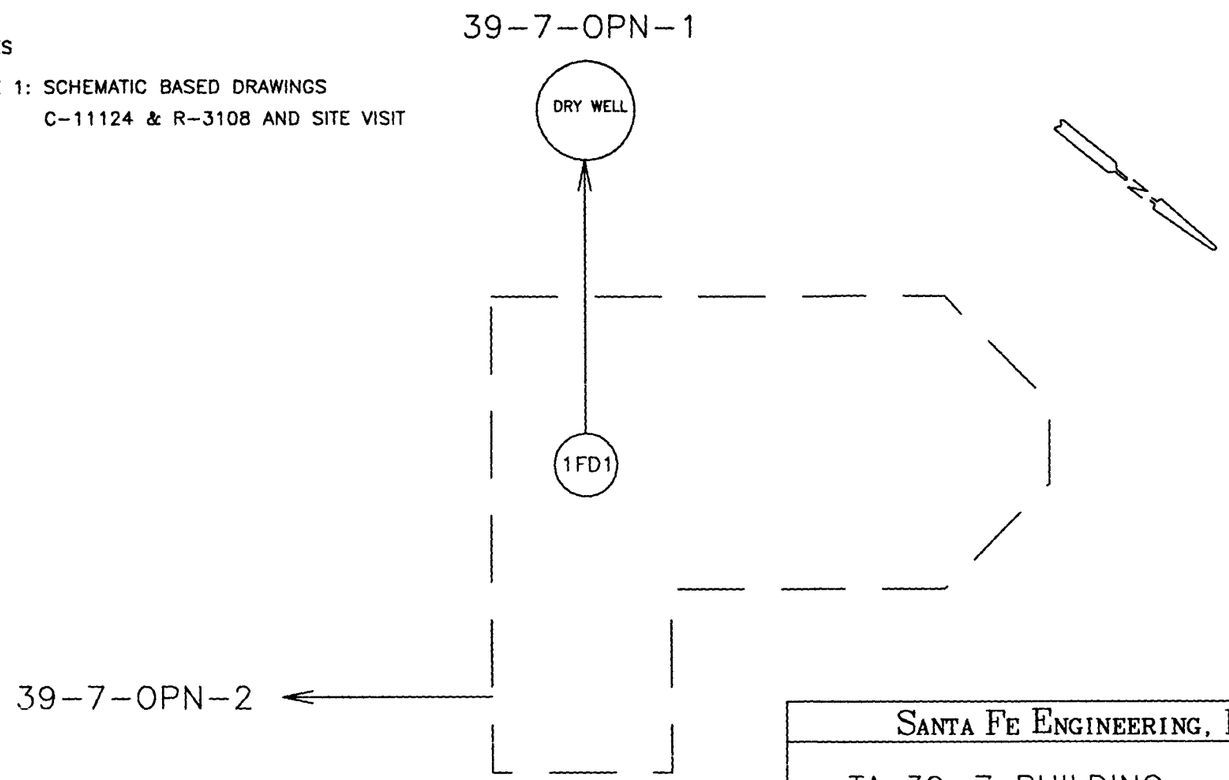

LEGEND

FD - FLOOR DRAIN

SANTA FE ENGINEERING, LTD.		
TA 39-7 BUILDING DRAIN SCHEMATIC	DRAWN	PEB
	DESIGN	PEB
	CHECKED	LBA
	RELEASED	
	DATE	12/23/91
SUBMITTED	RECOMMENDED	APPROVED
Los Alamos — Los Alamos National Laboratory, Los Alamos, New Mexico 87545	SHEET	OF
CLASSIFICATION	REVIEWER	DATE
REQUESTING DIVISION / REQUESTING GROUP	LAB JOB NO.	DRAWING NO. FIGURE 12 — REV.

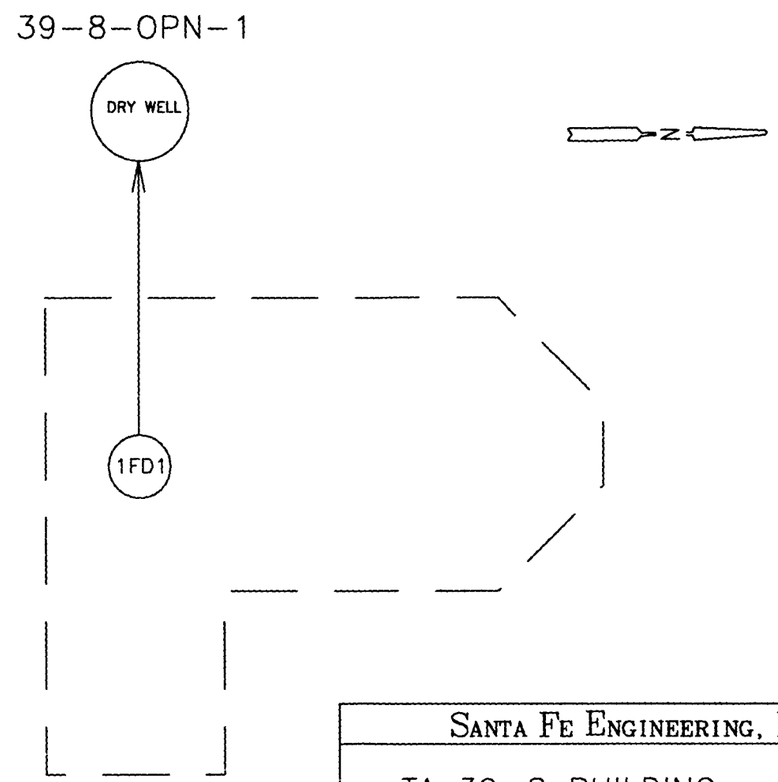

NOTES

NOTE 1: SCHEMATIC BASED DRAWINGS C-11124 AND SITE VISIT

LEGEND

FD - FLOOR DRAIN

SANTA FE ENGINEERING, LTD.

TA 39-8 BUILDING DRAIN SCHEMATIC

DRAWN	PEB
DESIGN	PEB
CHECKED	LBA
RELEASED	
DATE	12/23/91

SUBMITTED | RECOMMENDED | APPROVED

Los Alamos — Los Alamos National Laboratory, Los Alamos, New Mexico 87545

SHEET / OF

CLASSIFICATION | REVIEWER | DATE

REQUESTING DIVISION | LAB JOB NO. | DRAWING NO. FIGURE 13 | REV.

REQUESTING GROUP

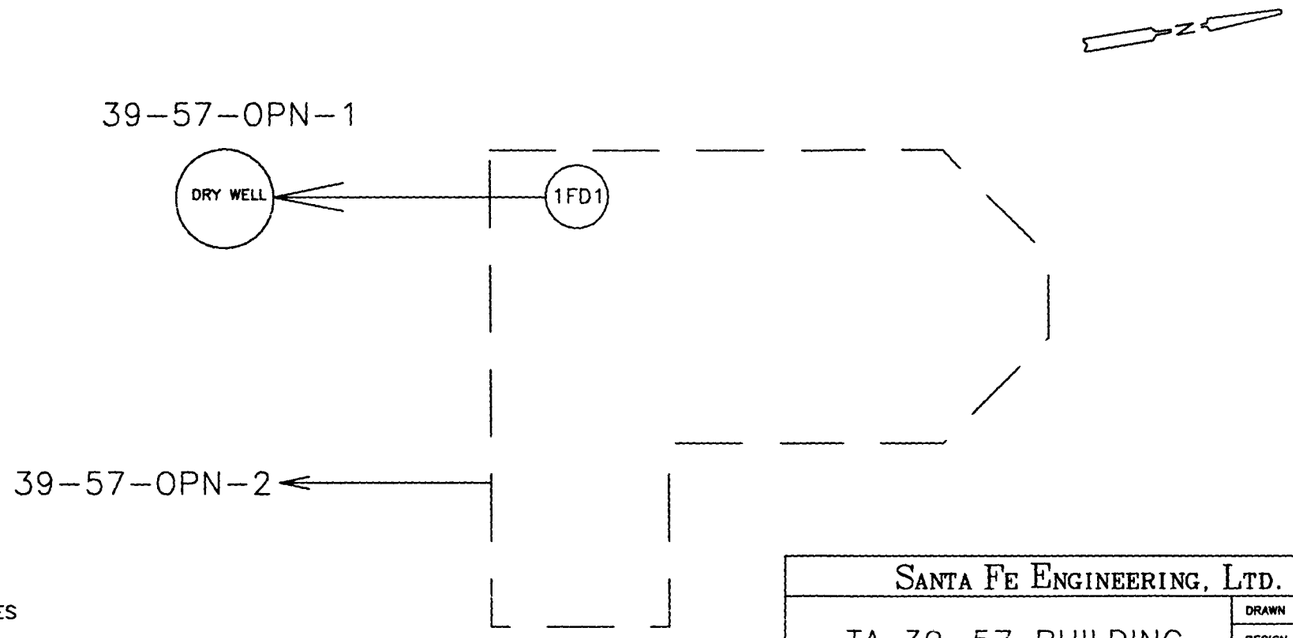

NOTES

NOTE 1: SCHEMATIC BASED DRAWINGS
C-22795, C-22800 &
R-3112 AND SITE VISIT

LEGEND

FD - FLOOR DRAIN

SANTA FE ENGINEERING, LTD.

TA 39-57 BUILDING
DRAIN SCHEMATIC

DRAWN	PEB
DESIGN	PEB
CHECKED	LBA
RELEASED	
DATE	12/23/91

SUBMITTED | RECOMMENDED | APPROVED

Los Alamos — Los Alamos National Laboratory, Los Alamos, New Mexico 87545

SHEET / OF

CLASSIFICATION | REVIEWER | DATE

REQUESTING DIVISION | LAB JOB NO. | DRAWING NO. FIGURE 14 | REV.

REQUESTING GROUP

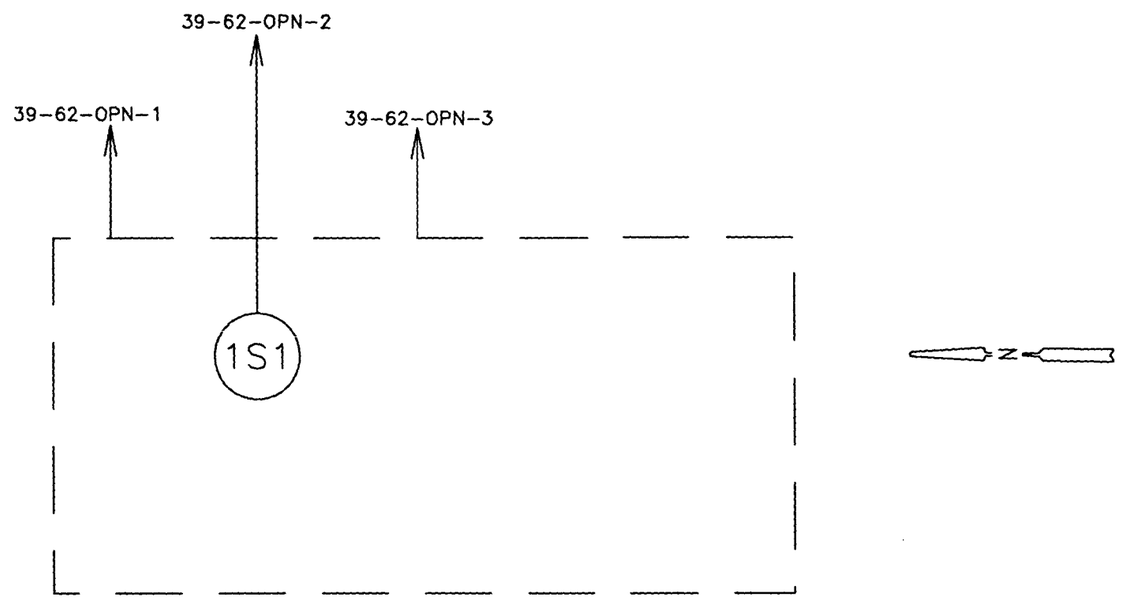

NOTES

NOTE 1: SCHEMATIC BASED DRAWINGS
C-45193 & R-3113 AND SITE VISIT

LEGEND

S - SINK

SANTA FE ENGINEERING, LTD.		
TA 39-62 BUILDING DRAIN SCHEMATIC	DRAWN	PEB
	DESIGN	PEB
	CHECKED	LBA
	RELEASED	
	DATE	1/8/92
SUBMITTED	RECOMMENDED	APPROVED
Los Alamos — Los Alamos National Laboratory, Los Alamos, New Mexico 87545	SHEET	OF
CLASSIFICATION	REVIEWER	DATE
REQUESTING DIVISION / REQUESTING GROUP	LAB JOB NO.	DRAWING NO. FIGURE 15 / REV.

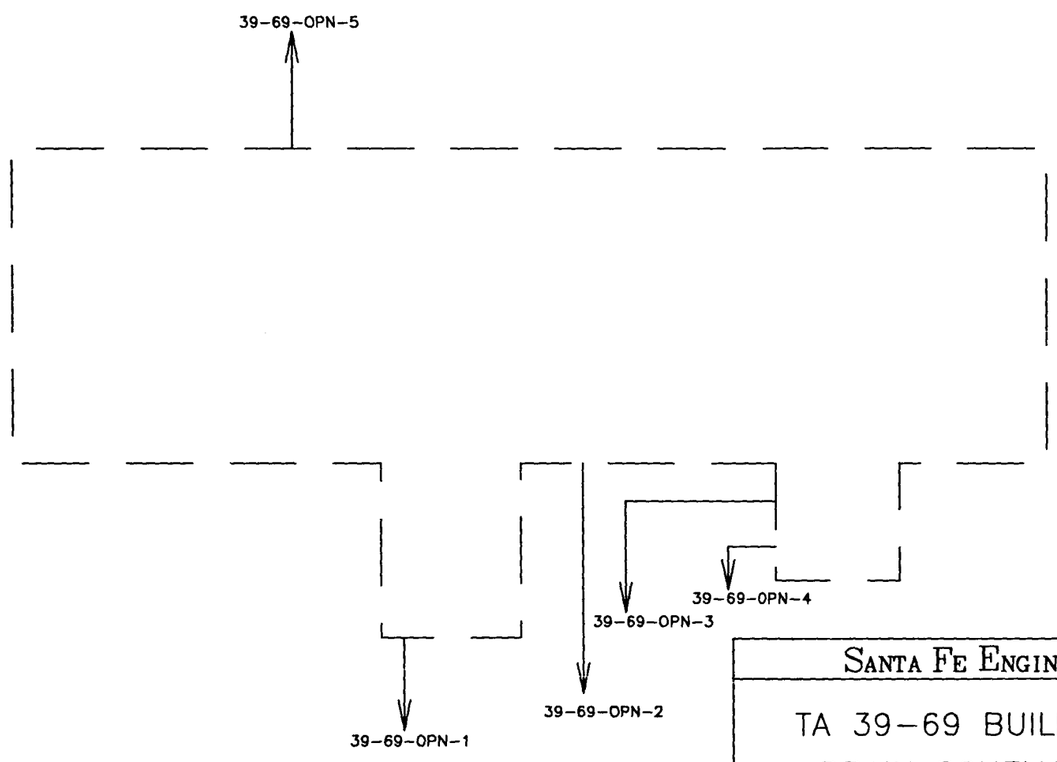

NOTES

NOTE 1: SCHEMATIC BASED DRAWINGS
C-36163, C-51322 &
R-1689 AND SITE VISIT

SANTA FE ENGINEERING, LTD.

TA 39-69 BUILDING
DRAIN SCHEMATIC

DRAWN	PEB
DESIGN	PEB
CHECKED	LBA
RELEASED	
DATE	1/14/92

SUBMITTED | RECOMMENDED | APPROVED

Los Alamos — Los Alamos National Laboratory, Los Alamos, New Mexico 87545

SHEET / OF

CLASSIFICATION | REVIEWER | DATE

REQUESTING DIVISION | LAB JOB NO. | DRAWING NO. FIGURE 16 | REV.

REQUESTING GROUP

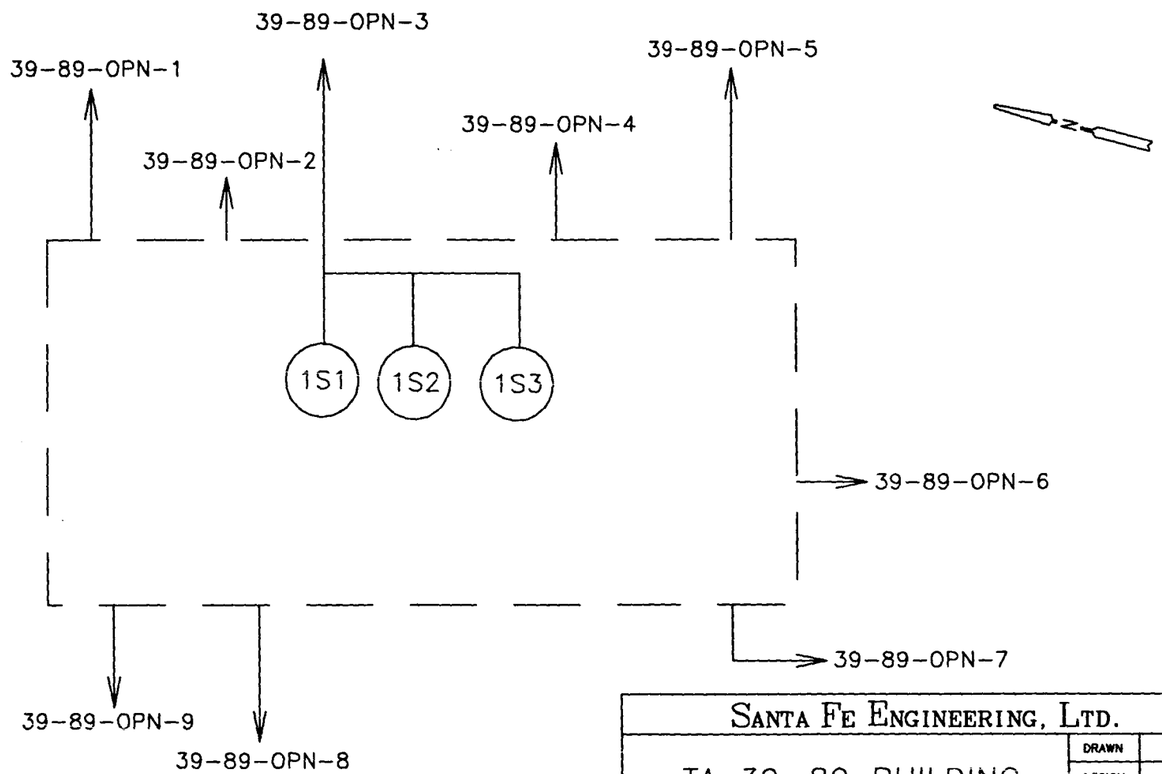

NOTES

NOTE 1: SCHEMATIC BASED DRAWINGS
C-43769 & R-5355
AND SITE VISIT

LEGEND

S - SINK

SANTA FE ENGINEERING, LTD.

TA 39-89 BUILDING
DRAIN SCHEMATIC

DRAWN	PEB
DESIGN	PEB
CHECKED	LBA
RELEASED	
DATE	12/23/91

SUBMITTED | RECOMMENDED | APPROVED

Los Alamos — Los Alamos National Laboratory, Los Alamos, New Mexico 87545

SHEET / OF

CLASSIFICATION | REVIEWER | DATE

REQUESTING DIVISION | LAB JOB NO. | DRAWING NO. FIGURE 17 | REV.

REQUESTING GROUP

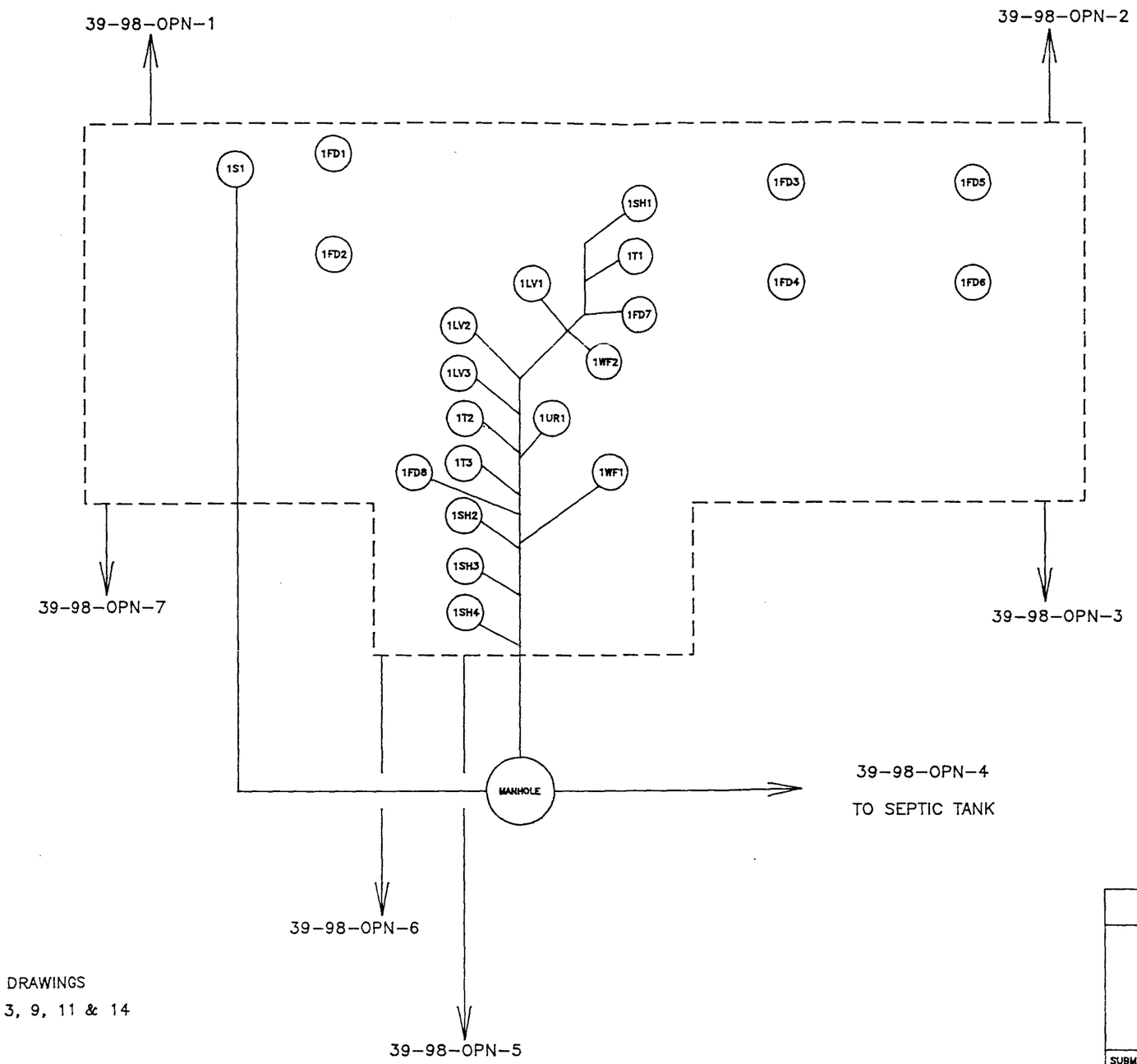

LEGEND

FD – FLOOR DRAIN
LV – LAVATORY
S – SINK
SH – SHOWER
T – TOILET
UR – URINAL
WF – WATER FOUNTAIN

NOTES

NOTE 1: SCHEMATIC BASED DRAWINGS C-45423 SHEETS 3, 9, 11 & 14 AND SITE VISIT

SANTA FE ENGINEERING, LTD.

TA 39-98 BUILDING DRAIN SCHEMATIC

DRAWN	PEB
DESIGN	PEB
CHECKED	LBA
RELEASED	
DATE	1/10/92

SUBMITTED | RECOMMENDED | APPROVED

Los Alamos — Los Alamos National Laboratory, Los Alamos, New Mexico 87545

SHEET / OF

CLASSIFICATION | REVIEWER | DATE

REQUESTING DIVISION | LAB JOB NO. | DRAWING NO. FIGURE 18 | REV.

REQUESTING GROUP

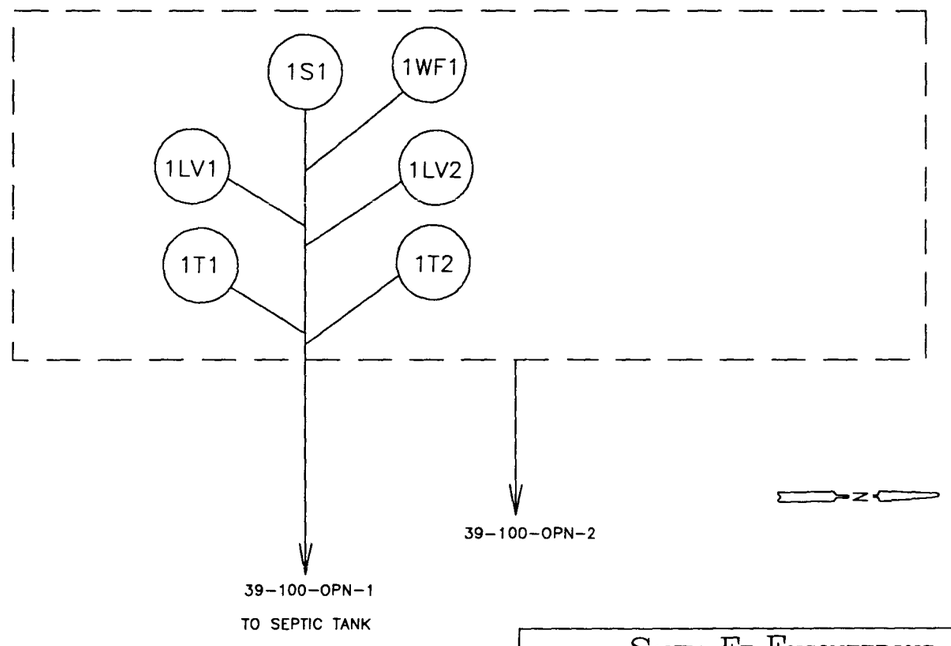

NOTES

NOTE 1: SCHEMATIC BASED DRAWINGS C-44331 & R-5385 AND SITE VISIT

LEGEND

LV – LAVATORY
S – SINK
T – TOILET
WF – WATER FOUNTAIN

SANTA FE ENGINEERING, LTD.

TA 39-100 BUILDING DRAIN SCHEMATIC

DRAWN	PEB
DESIGN	PEB
CHECKED	LBA
RELEASED	
DATE	1/10/92

SUBMITTED | RECOMMENDED | APPROVED

Los Alamos — Los Alamos National Laboratory, Los Alamos, New Mexico 87545

SHEET / OF

CLASSIFICATION | REVIEWER | DATE

REQUESTING DIVISION | LAB JOB NO. | DRAWING NO. FIGURE 19 | REV.

REQUESTING GROUP

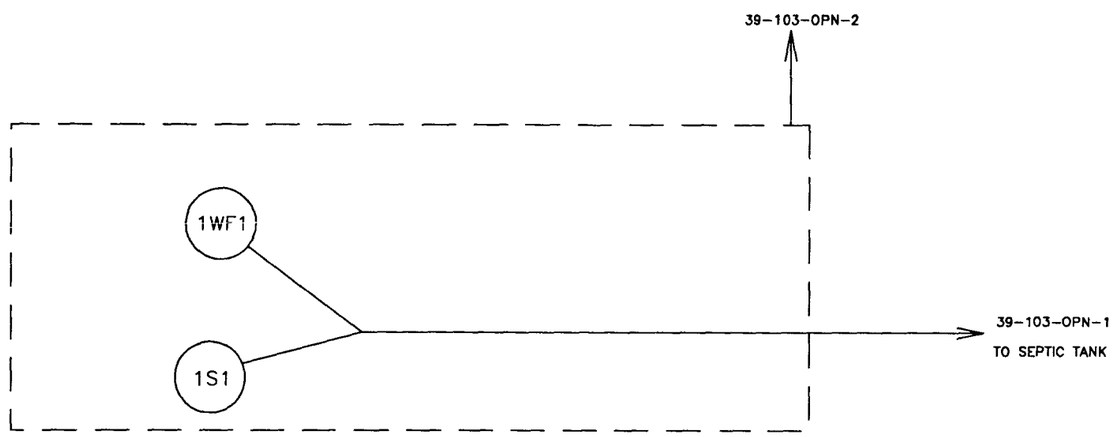

NOTES

NOTE 1: SCHEMATIC BASED DRAWINGS
C-44450 & R-5473 AND SITE VISIT

LEGEND

S – SINK

WF – WATER FOUNTAIN

SANTA FE ENGINEERING, LTD.		
TA 39-103 BUILDING DRAIN SCHEMATIC	DRAWN	PEB
	DESIGN	PEB
	CHECKED	LBA
	RELEASED	
	DATE	1/10/92
SUBMITTED	RECOMMENDED	APPROVED
Los Alamos — Los Alamos National Laboratory, Los Alamos, New Mexico 87545	SHEET	OF
CLASSIFICATION	REVIEWER	DATE
REQUESTING DIVISION	LAB JOB NO.	DRAWING NO. FIGURE 20 — REV.
REQUESTING GROUP		

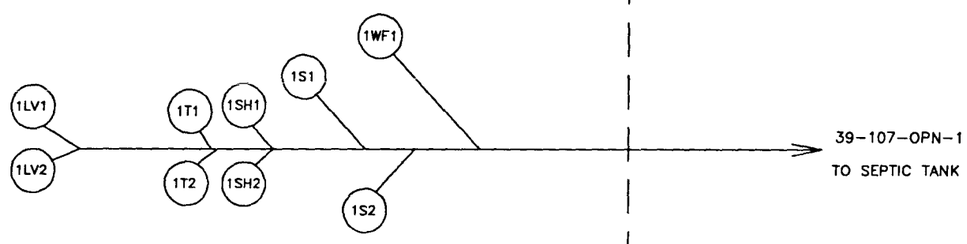

NOTES

NOTE 1: SCHEMATIC BASED DRAWINGS C-44977 SHEET 1, C-44978, R-5591 AND SITE VISIT

LEGEND

LV – LAVATORY

S – SINK

SH – SHOWER

T – TOILET

WF – WATER FOUNTAIN

SANTA FE ENGINEERING, LTD.

TA 39-107 BUILDING DRAIN SCHEMATIC

DRAWN	PEB
DESIGN	PEB
CHECKED	LBA
RELEASED	
DATE	1/10/92

SUBMITTED | RECOMMENDED | APPROVED

Los Alamos — Los Alamos National Laboratory, Los Alamos, New Mexico 87545

SHEET / OF

CLASSIFICATION | REVIEWER | DATE

REQUESTING DIVISION | LAB JOB NO. | DRAWING NO. FIGURE 21 | REV.

REQUESTING GROUP

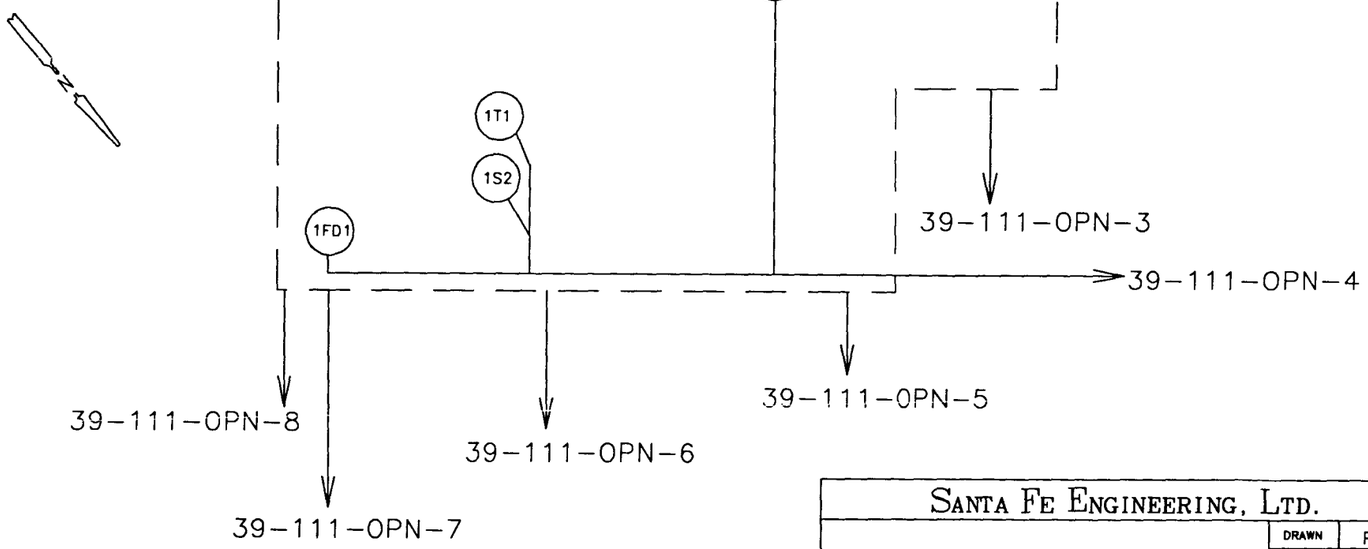

LEGEND

FD – FLOOR DRAIN

S – SINK

T – TOILET

NOTES

NOTE 1: SCHEMATIC BASED SITE VISIT

SANTA FE ENGINEERING, LTD.

TA 39-111 BUILDING DRAIN SCHEMATIC

DRAWN	PEB
DESIGN	PEB
CHECKED	LBA
RELEASED	
DATE	1/10/92

SUBMITTED | RECOMMENDED | APPROVED

Los Alamos National Laboratory
Los Alamos, New Mexico 87545

SHEET / OF

CLASSIFICATION | REVIEWER | DATE

REQUESTING DIVISION | LAB JOB NO. | DRAWING NO. | REV.

REQUESTING GROUP

FIGURE 22

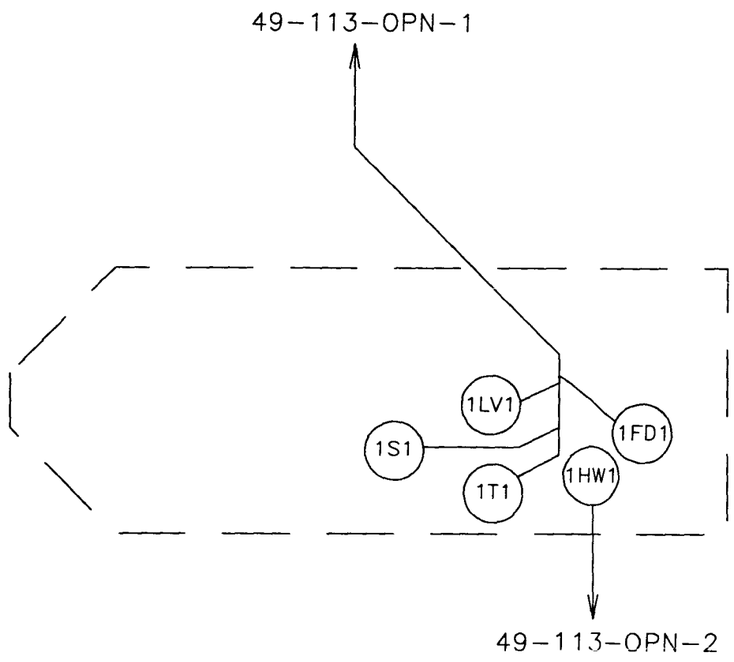

N

NOTES

NOTE 1: SCHEMATIC BASED ON DRAWINGS C-44775 SHEETS 13, 25 & 39 and R-5556 AND SITE VISIT

LEGEND

FD - FLOOR DRAIN
HW - HOT WATER HEATER
LV - LAVATORY
S - SINK
T - TOILET

SANTA FE ENGINEERING, LTD.		
TA 49-113 BUILDING DRAIN SCHEMATIC	DRAWN	PEB
	DESIGN	PEB
	CHECKED	LBA
	RELEASED	
	DATE	12/27/91
SUBMITTED	RECOMMENDED	APPROVED
Los Alamos	Los Alamos National Laboratory, Los Alamos, New Mexico 87545	SHEET / OF
CLASSIFICATION	REVIEWER	DATE
REQUESTING DIVISION	LAB JOB NO.	DRAWING NO. FIGURE 23 / REV.
REQUESTING GROUP		

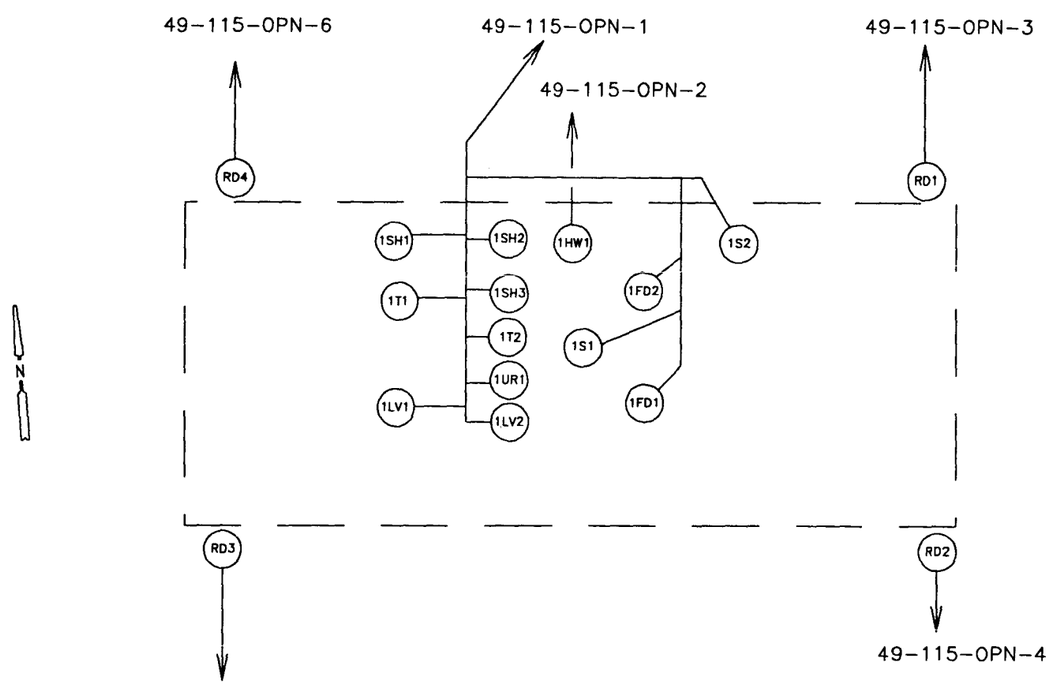

LEGEND

FD – FLOOR DRAIN
HW – HOT WATER HEATER
LV – LAVATORY
RD – ROOF DRAIN
S – SINK
SH – SHOWER
T – TOILET
UR – URINAL

NOTES

NOTE 1: SCHEMATIC BASED ON DRAWINGS C-44775 SHEETS 13 & 63 and R-5587 AND SITE VISIT

SANTA FE ENGINEERING, LTD.

TA 49-115 BUILDING DRAIN SCHEMATIC

DRAWN	PEB
DESIGN	PEB
CHECKED	LBA
RELEASED	
DATE	1/6/92

SUBMITTED | RECOMMENDED | APPROVED

Los Alamos — Los Alamos National Laboratory, Los Alamos, New Mexico 87545

SHEET ___ OF ___

CLASSIFICATION | REVIEWER | DATE

REQUESTING DIVISION | LAB JOB NO. | DRAWING NO. FIGURE 24 | REV.

REQUESTING GROUP

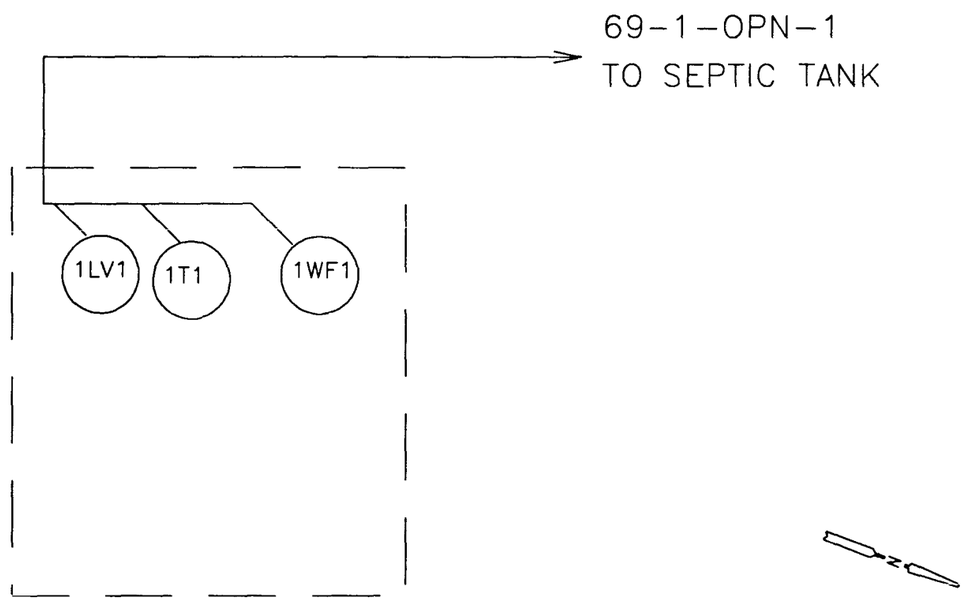

NOTES

NOTE 1: SCHEMATIC BASED ON DRAWINGS C-16368, C-16370 & R-3301 AND SITE VISIT

LEGEND

LV – LAVATORY

T – TOILET

WF – WATER FOUNTAIN

SANTA FE ENGINEERING, LTD.

TA 69-1 BUILDING DRAIN SCHEMATIC

DRAWN	PEB
DESIGN	PEB
CHECKED	LBA
RELEASED	
DATE	1/10/92

SUBMITTED | RECOMMENDED | APPROVED

Los Alamos — Los Alamos National Laboratory, Los Alamos, New Mexico 87545

SHEET ___ OF ___

CLASSIFICATION | REVIEWER | DATE

REQUESTING DIVISION | LAB JOB NO. | DRAWING NO. FIGURE 25 | REV.

REQUESTING GROUP

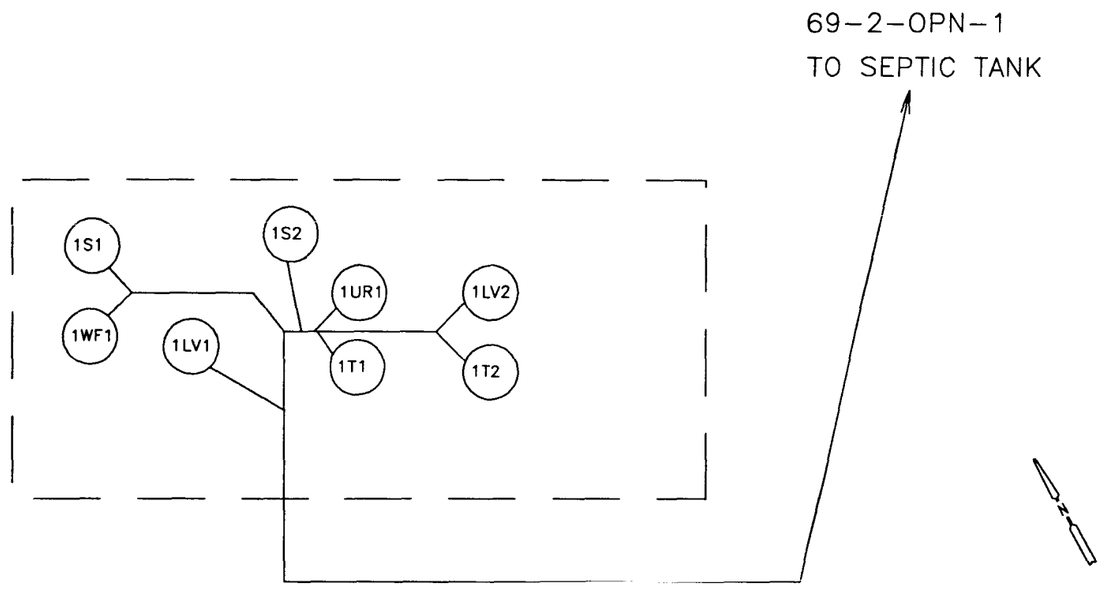

LEGEND

LV – LAVATORY

S – SINK

T – TOILET

UR – URINAL

WF – WATER FOUNTAIN

NOTES

NOTE 1: SCHEMATIC BASED ON DRAWINGS
C-44939 SHEETS 1 & 4 and
C-44940 SHEET 3 AND SITE VISIT

SANTA FE ENGINEERING, LTD.

TA 69-2 BUILDING
DRAIN SCHEMATIC

DRAWN	PEB
DESIGN	PEB
CHECKED	LBA
RELEASED	
DATE	1/10/92

SUBMITTED | RECOMMENDED | APPROVED

Los Alamos — Los Alamos National Laboratory, Los Alamos, New Mexico 87545

SHEET OF

CLASSIFICATION | REVIEWER | DATE

REQUESTING DIVISION | LAB JOB NO. | DRAWING NO. FIGURE 26 | REV.

REQUESTING GROUP

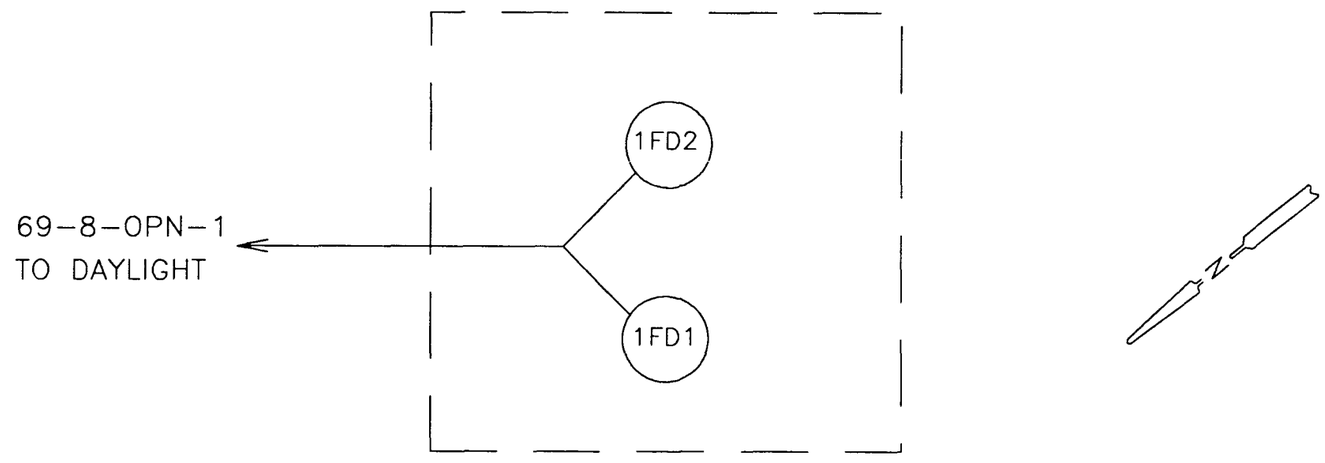

NOTES

NOTE 1: SCHEMATIC BASED ON SITE VISIT

LEGEND

FD - FLOOR DRAIN
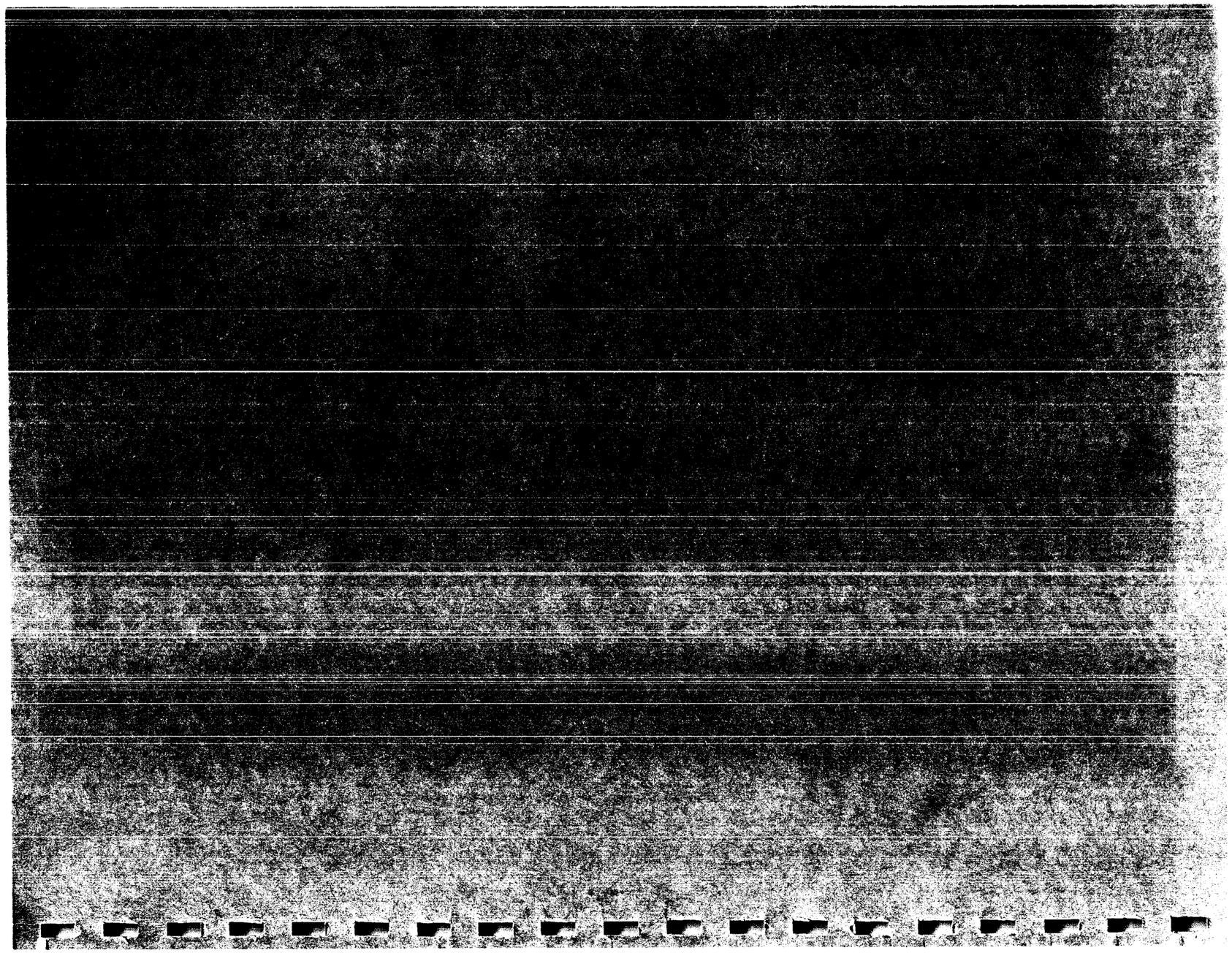
SANTA FE ENGINEERING, LTD.			
TA 69-8 BUILDING DRAIN SCHEMATIC		DRAWN	PEB
		DESIGN	PEB
		CHECKED	LBA
		RELEASED	
		DATE	1/10/92
SUBMITTED	RECOMMENDED	APPROVED	
Los Alamos	Los Alamos National Laboratory Los Alamos, New Mexico 87545	SHEET	OF
CLASSIFICATION	REVIEWER	DATE	
REQUESTING DIVISION	LAB JOB NO.	DRAWING NO.	REV.
REQUESTING GROUP		FIGURE 27