109514

ENTERED

USGS
science for a changing world

Techniques of Water-Resources Investigations
of the United States Geological Survey

Chapter A14

USE OF FLUMES IN MEASURING DISCHARGE

By F. A. Kilpatrick and V. R. Schneider

Book 3

APPLICATIONS OF HYDRAULICS

Click here to return to USGS Publications

33777

UNITED STATES DEPARTMENT OF THE INTERIOR

JAMES G. WATT, Secretary

GEOLOGICAL SURVEY

Dallas L. Peck, Director

UNITED STATES GOVERNMENT PRINTING OFFICE, WASHINGTON : 1983

For sale by the Distribution Branch, U.S. Geological Survey
604 South Pickett Street, Alexandria, VA 22304

PREFACE

The series of manuals on techniques describes procedures for planning and executing specialized work in water-resources investigations. The material is grouped under major subject headings called books and further subdivided into sections and chapters; Section A of Book 3 is on surface-water techniques.

Provisional drafts of chapters are distributed to field offices of the U.S. Geological Survey for their use. These drafts are subject to revision because of experience in use or because of advancement in knowledge, techniques, or equipment. After the technique described in a chapter is sufficiently developed, the chapter is published and sold by the Eastern Distribution Branch, Text Products Section, U.S. Geological Survey, 604 South Pickett Street, Alexandria, VA 22304 (authorized agent of Superintendent of Documents, Government Printing Office).

TECHNIQUES OF WATER-RESOURCES INVESTIGATIONS OF THE U.S. GEOLOGICAL SURVEY

The U.S. Geological Survey publishes a series of manuals describing procedures for planning and conducting specialized work in water-resources investigations. The manuals published to date are listed below and may be ordered by mail from the **Branch of Distribution, U.S. Geological Survey, 1200 South Eads Street, Arlington, VA 22202** (an authorized agent of the Superintendent of Documents, Government Printing Office).

Prepayment is required. Remittances should be sent by check or money order payable to U.S. Geological Survey. Prices are not included in the listing below as they are subject to change. **Current prices can be obtained by calling the USGS Branch of Distribution, phone (202) 751-6777.** Prices include cost of domestic surface transportation. For transmittal outside the U.S.A. (except to Canada and Mexico) a surcharge of 25 percent of the net bill should be included to cover surface transportation.

When ordering any of these publications, please give the title, book number, chapter number, and "U.S. Geological Survey Techniques of Water-Resources Investigations."

TWI 1-D1. Water temperature – influential factors, field measurement, and data presentation, by H. H. Stevens, Jr., J. F. Ficke, and G. F. Smoot, 1975, 65 pages.

TWI 1-D2. Guidelines for collection and field analysis of ground-water samples for selected unstable constituents, by W. W. Wood. 1976. 24 pages. Reprint.

TWI 2-D1. Application of surface geophysics to ground-water investigations, by A. A. R. Zohdy, G. P. Eaton, and D. R. Mabey. 1974. 116 pages. Reprint.

TWI 2-E1. Application of borehole geophysics to water-resources investigations, by W. S. Keys and L. M. MacCary. 1971. 126 pages.

TWI 3-A1. General field and office procedures for indirect discharge measurements, by M. A. Benson and Tate Dalrymple. 1967. 30 pages.

TWI 3-A2. Measurement of peak discharge by the slope-area method, by Tate Dalrymple and M. A. Benson. 1967. 12 pages.

TWI 3-A3. Measurement of peak discharge at culverts by indirect methods, by G. L. Bodhaine. 1968. 60 pages.

TWI 3-A4. Measurement of peak discharge at width contractions by indirect methods, by H. F. Matthai. 1967. 44 pages.

TWI 3-A5. Measurement of peak discharge at dams by indirect methods, by Harry Hulsing. 1967. 29 pages.

TWI 3-A6. General procedure for gaging streams, by R. W. Carter and Jacob Davidian. 1968. 13 pages.

TWI 3-A7. Stage measurements at gaging stations, by T. J. Buchanan and W. P. Somers. 1968. 28 pages.

TWI 3-A8. Discharge measurements at gaging stations, by T. J. Buchanan and W. P. Somers. 1969. 65 pages. Reprint.

TWI 3-A9. Measurement of time of travel and dispersion in streams by dye tracing, by E. P. Hubbard, F. A. Kilpatrick, L. A. Martens, and J. R. Wilson, Jr. 1980. 87 pages.

TWI 3-A11. Measurement of discharge by moving-boat method, by G. F. Smoot and C. E. Novak. 1969. 22 pages.
TWI 3-B1. Aquifer-test design, observation, and data analysis, by R. W. Stallman. 1971. 26 pages.
TWI 3-B2. Introduction to ground-water hydraulics, a programed text for self-instruction, by G. D. Bennett. 1976. 172 pages.
TWI 3-B3. Type curves for selected problems of flow to wells in confined aquifers, by J. E. Reed.
TWI 3-C1. Fluvial sediment concepts, by H. P. Guy. 1970. 55 pages.
TWI 3-C2. Field methods for measurement of fluvial sediment, by H. P. Guy and V. W. Norman. 1970. 59 pages.
TWI 3-C3. Computation of fluvial-sediment discharge, by George Porterfield. 1972. 66 pages.
TWI 4-A1. Some statistical tools in hydrology, by H. C. Riggs. 1968. 39 pages.
TWI 4-A2. Frequency curves, by H. C. Riggs. 1968. 15 pages.
TWI 4-B1. Low-flow investigations, by H. C. Riggs. 1972. 18 pages.
TWI 4-B2. Storage analyses for water supply, by H. C. Riggs and C. H. Hardison. 1973. 20 pages.
TWI 4-B3. Regional analyses of streamflow characteristics, by H. C. Riggs. 1973. 15 pages.
TWI 4-D1. Computation of rate and volume of stream depletion by wells, by C. T. Jenkins. 1970. 17 pages.
TWI 5-A1. Methods for determination of inorganic substances in water and fluvial sediments, by M. W. Skougstad and others, editors. 1979. 626 pages.
TWI 5-A2. Determination of minor elements in water by emission spectroscopy, by P. R. Barnett and E. C. Mallory, Jr. 1971. 31 pages.
TWI 5-A3. Methods for analysis of organic substances in water, by D. F. Goerlitz and Eugene Brown. 1972. 40 pages.
TWI 5-A4. Methods for collection and analysis of aquatic biological and microbiological samples, edited by P. E. Greeson, T. A. Ehlke, G. A. Irwin, B. W. Lium, and K. V. Slack. 1977. 332 pages.
TWI 5-A5. Methods for determination of radioactive substances in water and fluvial sediments, by L. L. Thatcher, V. J. Janzer, and K. W. Edwards. 1977. 95 pages.
TWI 5-C1. Laboratory theory and methods for sediment analysis, by H. P. Guy. 1969. 58 pages.
TWI 7-C1. Finite difference model for aquifer simulation in two dimensions with results of numerical experiments, by P. C. Trescott, G. F. Pinder, and S. P. Larson. 1976. 116 pages. Reprint.
TWI 7-C2. Computer model of two-dimensional solute transport and dispersion in ground water, by L. F. Konikow and J. D. Bredehoeft. 1978. 90 pages.
TWI 7-C3. A model for simulation of flow in singular and interconnected channels, by R. W. Schaffranek, R. A. Baltzer, and D. E. Goldberg. 1981. 110 pages.
TWI 8-A1. Methods of measuring water levels in deep wells, by M. S. Garber and F. C. Koopman. 1968. 23 pages.
TWI 8-B2. Calibration and maintenance of vertical-axis type current meters, by G. F. Smoot and C. E. Novak. 1968. 15 pages.

CONTENTS

	Page
Preface	III
Symbols, Definitions, and Units	IX
Unit Conversion	X
Abstract	1
Introduction	1
Purpose and scope	1
Principles governing the design of flumes	2
Type I. Tranquil flow, small width reduction	3
Type II. Critical flow, large width reduction	3
Type III. Tranquil flow, small increase in bed elevation	4
Type IV. Supercritical flow, width reduction, steep slope	5
Type V. Supercritical flow, width reduction, drop in bed elevation	5
Type VI. Supercritical flow, steep slope	6
Parshall flume	6
Development	6
Configuration	7
Head-discharge relations	9
Portable Parshall flume	13
Configuration	13
Installation and operation	13
HS, H, and HL flumes	13
Configuration	13
Construction and installation	15
San Dimas flume	15
Configuration	15
Head-discharge relations	18
Modified San Dimas flume	18
Configuration	18
Head-discharge relations	19
Trapezoidal supercritical-flow flume	19
General design	19
Head-discharge relations	22
One-foot trapezoidal flume	23
Three-foot trapezoidal flume	24
Eight-foot trapezoidal flume	25
Flume selection and placement	26
Selection	26
Placement	27
Sample problem: critical-flow flume (Parshall flume)	28
Sample problem: supercritical-flow flume	30
Construction of flumes	33
General	33
Prefabricated construction	33
Cast in-place construction	34
Operation of flumes	38
Measurement of head	38
Current-meter measurement of discharge	40
Winter operation	42
Precalibrated discharge ratings versus in-place calibrations	44
Shift in the head-discharge relations	44
Discharge-rating shifts for critical-flow flumes	44
Discharge-rating shifts for supercritical-flow flumes	45
Summary	46
Selected references	46

FIGURES

		Page
FIGURE 1.	Specific energy diagram for rectangular channel	2
2.	Type I control: subcritical-flow contraction obtained by small width reduction, horizontal bed	3
3.	Type II control: critical-flow contraction obtained by large width reduction, horizontal bed	4
4.	Type III control: subcritical-flow contraction obtained by small increase in bed elevation, horizontal bed	4
5.	Type IV control: supercritical-flow contraction obtained by width reduction and sloping bed	5
6.	Type V control: supercritical-flow contraction obtained by width reduction and drop in bed	5
7.	Type VI control: supercritical-flow obtained by steepening slope	6
8.	Configuration and descriptive nomenclature for Parshall flumes (see table 1 and "Symbols, Definitions, and Units" for dimensions and definitions of symbols)	7
9.	Discharge rating for "inch" Parshall flumes for both free-flow and submergence conditions	11
10.	Correction factors for submerged flow through A, 1- to 8-foot, and B, 10- to 50-foot Parshall flume	12

Page

11. Working drawing of modified 3-inch Parshall flume ---- 14
12. Modified 3-inch Parshall flume installed for measuring discharge ---- 15
13. Configuration and proportions of types HS, H, and HL flumes ---- 16
14. Plans for straight headwall and drop-box installations of HS, H, and HL flumes ---- 17
15. Configuration and discharge ratings for different sizes of San Dimas flume as originally designed ---- 18
16. Configuration and discharge ratings for different sizes of the modified San Dimas flume ---- 19
17. Configuration, design, and capacities of trapezoidal supercritical-flow flumes ---- 21
18. Flow through a 3-foot trapezoidal supercritical-flow flume showing transition from subcritical to supercritical flow ---- 22
19. Sketch illustrating use of the total-energy (Bernoulli) equation ---- 23
20. Discharge-rating curve for 1-foot trapezoidal supercritical- flow flume ---- 24
21. Discharge-rating curve for 3-foot trapezoidal supercritical- flow flume ---- 25
22. Discharge-rating curve for 8-foot trapezoidal supercritical- flow flume ---- 26
23. Erosion of concrete on the floor and walls of the throat of a trapezoidal flume ---- 27
24. Graph illustrating method of selection and placement of a Parshall flume control ---- 29
25. Rating curves used in problem illustrating the selection and placement of trapezoidal supercritical-flow flume ---- 31
26. Forming for concreting of components for prefabricating trapezoidal supercritical-flow flume ---- 33
27. Construction of 3-foot trapezoidal supercritical-flow flume using precast concrete components ---- 34
28. Completed prefabricated trapezoidal supercritical-flow flume ---- 34
29. Supercritical-flow flume prefabricated of steel ---- 35
30. Construction layout features for a 1-foot trapezoidal supercritical-flow flume with a height of 2.5 feet ---- 36
31. Vertical support walls and energy-dissipation box at early stage of construction of 1-foot trapezoidal supercritical-flow flume ---- 37
32. Method of obtaining accurate dimensional control by using adjustable steel angles for concreting screeds during construction of 1-foot trapezoidal flume ---- 38
33. Concreting of throat section of 1-foot trapezoidal supercritical-flow flume using steel angle screeds ---- 39
34. View looking downstream at completed 1-foot trapezoidal supercritical-flow flume, less point-gage support beam ---- 40
35. View looking upstream at completed 1-foot trapezoidal supercritical-flow flume. Intake farthest downstream is for sediment sampling ---- 41
36. Trapezoidal flume with infrared heater and roof installation for winter operation ---- 43
37. Effect of unsymmetrical deposition in flume approach on flow in the throat ---- 45

TABLES

Page

TABLE 1. Dimensions and capacities of standard Parshall flumes ---- 8
2. Discharge ratings for 2- to 9-inch Parshall flumes under free-flow conditions ---- 9
3. Discharge ratings for 1- to 50-foot Parshall flumes under free-flow conditions ---- 10
4. Discharge ratings for 3-inch modified Parshall flumes ---- 15
5. Discharge ratings for various sizes of HS, H, and HL flumes ---- 16
6. Submergence computations for 8-foot Parshall flumes ---- 30
7. Discharge rating for natural channel ---- 31
8. Discharge ratings for 3-foot trapezoidal flumes ---- 32

SYMBOLS, DEFINITIONS, AND UNITS

Symbol	*Definition*	*Unit*
	GENERAL	
A	Cross-sectional area	ft^2
A_c	Cross-sectional area at critical depth section	ft^2
A_m	Cross-sectional area at measuring section	ft^2
CDL	Critical depth line	
D	Wall height	ft
d	Depth of flow	ft
d_c	Critical-flow depth	ft
d_m	Depth at the measuring section	ft
E	Specific energy	ft
EL	Energy line	
g	Gravitational constant (acceleration)	ft/s^2
H_T	Head measured in throat section	ft
h_e	Friction loss between two sections	ft
L_C	Axial length of flume-converging reach	ft
L_D	Axial length of flume-diverging reach	ft
L_T	Axial length of flume throat reach	ft
n	Manning roughness coefficient	$ft^{1/6}$
p	Drop from dike or gutter invert to flume floor for HS, H, HL flumes	ft
Q	Total discharge	ft^3/s
q	Unit discharge	ft^3/s
R	Hydraulic radius	ft
RP	Reference point	
r	Radius of flume entrance rounding	ft
S_c	Critical slope	
S_o	Bed slope	
T_c	Top width at the critical flow section	ft
T_m	Top width at the measuring section	ft
V	Velocity	ft/s
V_c	Critical velocity	ft/s
V_D	Mean vertical velocity at a distance from a vertical wall equal to the depth	
V_m	Velocity at the measuring section	ft/s
$V^2/2g$	Velocity head	ft
$\overline{W}$	Average width	ft
W_c	Flume width at the entrance to the contacted section	ft
W_D	Flume width at the exit of the diverging section	ft
W_T	Flume width in the throat section	ft
WS	Water surface	
Y	Elevation of flume floor above any arbitrary datum plane	ft
Z	Critical-section factor $=A_c\sqrt{A_c/T_c}$	$ft^{5/2}$
$>$	Greater than	
	SPECIFIC TO PARSHALL FLUMES	
C	Converging wall length	ft
H_c	Head measured in converging section at 2/3 the wall length, C, upstream of flume crest	ft
H_T	Head measured in throat section at a point a distance upstream of the exit of the throat section and b distance above lowest point in flume; used to determine submergence	ft
K	Amount of drop at exit of flume relative to flume datum	ft
k_s	Correction factor for submerged flow	ft^3/s
L	Distance from throat crest to upstream measuring section	ft
N	Amount of drop in throat floor relative to flume datum	ft
Q_c	Submergence discharge correction unadjusted for flume size	ft^3/s
Q_f	Discharge under free-flow conditions	ft^3/s
Q_o	Nondimensional discharge, $Q/g^{1/2}W_T^{5/2}$	
Q_s	Discharge under submergence conditions	ft^3/s
X_o	Nondimensional distance, L/W_T	ft^2
Y_o	Nondimensional depth, H_c/W_T	ft^2

UNIT CONVERSION

Multiply inch-pound unit	*By*	*To obtain SI unit*
	Length	
inch (in)	25.4	millimeter (mm)
foot (ft)	0.3048	meter (m)
mile (mi)	1.609	kilometer (km)
	Volume	
gallon (gal)	3.785×10^{-3}	cubic meter (m^3)
cubic foot (ft^3)	0.0283	cubic meter (m^3)
	Volume per unit time	
cubic foot per second (ft^3/s)	0.0283	cubic meter per second (m^3/s)
gallon per minute (gal/min)	6.309×10^{-5}	cubic meter per second (m^3/s)
	Weight	
1 pound (lb)	453.6	gram (g)

USE OF FLUMES IN MEASURING DISCHARGE

By F. A. Kilpatrick and V. R. Schneider

Abstract

Flumes for measuring discharge are usually of two general groups—critical-flow flumes and supercritical-flow flumes. In this chapter, the underlying design principles for each group are discussed; the most commonly used flumes are described and their discharge ratings presented. There is also discussion of considerations in choosing and fitting the appropriate flume for a given situation as well as flume construction techniques and operational experiences.

Introduction

The use of flumes in measuring open-channel flow began shortly after the turn of the century. Flumes have a limited but important use in such measurement. As with any other type of artificial control, such as weirs, flumes are built in streams whose channel characteristics are such that the natural stage-discharge relation is subject to shifting or is insensitive. Flumes are also built in small flashy streams where current-meter discharge measurements are impracticable because of the rapidity of changes in stage, and where the difficulty of anticipating stream rises makes it improbable that a stream-gager will arrive at the site during high-water periods. Flumes commonly utilize a contraction in channel width and a drop or a steepening of bed slope to produce critical or supercritical flow in the throat (contracted section) of the flume. The relation between depth measured at some standard cross section and discharge is thus a function only of the configuration of the flume and the relation can therefore be determined prior to installation.

Purpose and scope

The purpose of this report is to describe the various types of flumes that are most commonly used in the United States, to present the principles that govern their design, to provide discharge ratings for each, and to discuss the general considerations involved in the selection and placement of the type of flume most suitable for any given set of conditions.

The eight flumes described are listed below; they are categorized with respect to the flow regime that principally controls the measured stage; that is, each flume is classed as either a critical-flow flume or a supercritical-flow flume.

Critical-flow flumes:
- Parshall
- Portable Parshall
- HS, H, and HL (these three flumes differ from each other, primarily, in dimension)

Supercritical-flow flumes:
- San Dimas
- Modified San Dimas
- Trapezoidal

Principles Governing the Design of Flumes

Hydraulic contractions and transitions may best be analyzed by the use of specific energy principles. The specific energy diagram of figure 1 defines, for a rectangular channel, the relationships between depth of flow, d, and specific energy, E, for various unit discharges, q. Specific energy is the energy level with reference to the streambed at a particular point. Thus a given increase in streambed elevation results in a decrease in specific energy of the same magnitude.

Specific energy is defined as

$$E=d+V^2/2g. \quad (1)$$

Here V is the mean velocity and g is the gravitational constant. The term $V^2/2g$ is the velocity head. If unit discharge (the discharge per foot of width) is used, equation 1 becomes

$$E=d+q^2/2gd^2. \quad (2)$$

Evaluation of this equation yields the family of constant q curves that are asymptotic to a 45° line. The points lying on these curves and representing the minimum specific energy for a rectangular channel are uniquely defined by the equation

$$d_c = \sqrt[3]{q^2g}\,. \quad (3)$$

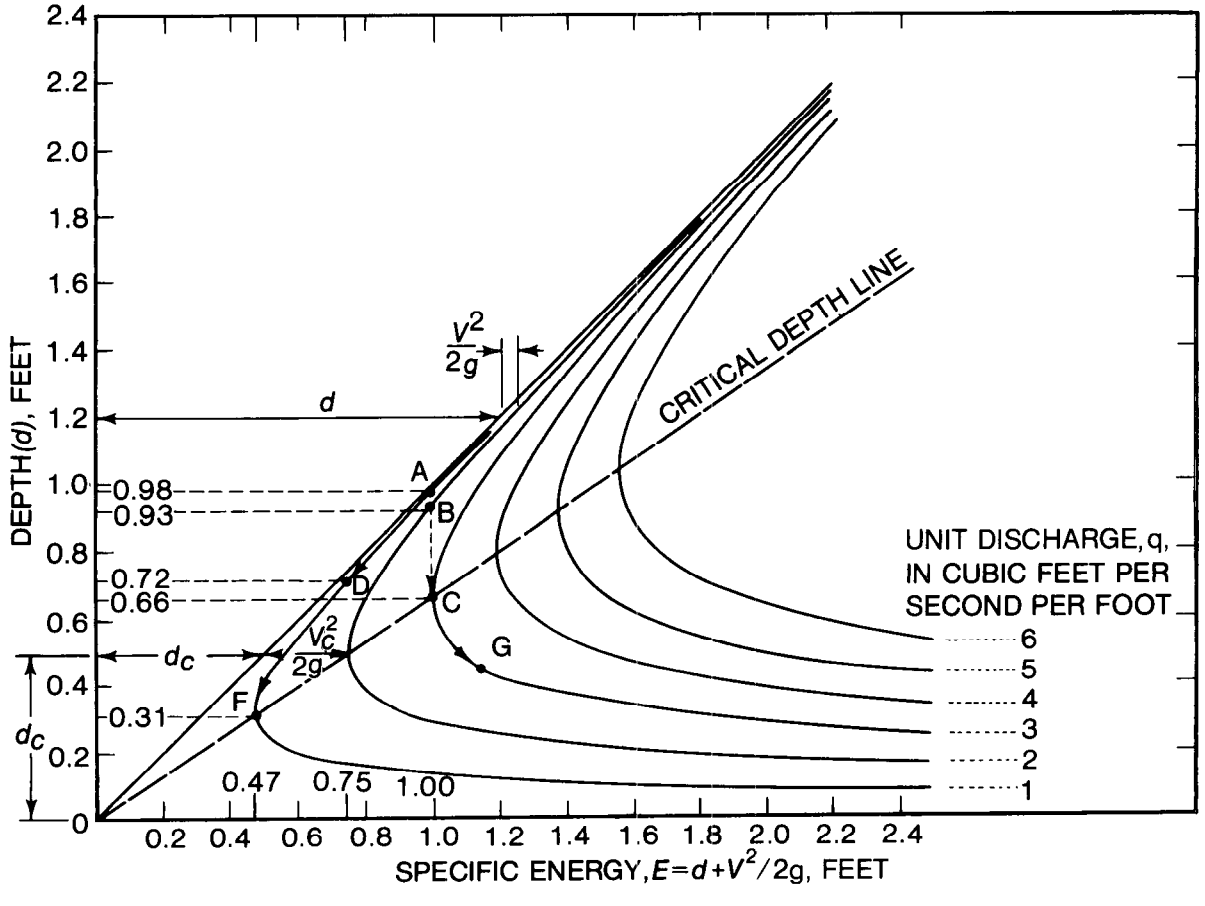

FIGURE 1.—Specific energy diagram for rectangular channel (all values are in units of feet except discharge).

This equation defines the line of critical depths as shown in figure 1. At this critical depth, there is the unique relationship in which the velocity head is exactly half the depth of flow. Flow conditions more commonly found in rivers and streams are tranquil or subcritical and are represented by the curves above the line of critical depth. In this region depths are large, and velocities and velocity heads are relatively small. Conversely, in the supercritical flow region below the critical depth line, depths are small, and velocities and velocity heads quite large.

Six approaches employed in various flume designs, as illustrated in figures 2–7, will be discussed using the specific energy diagram of figure 1. Application of specific energy principles to abrupt contractions and short channels is not entirely correct due to accelerative and curvilinear flows. However, it is the concept that is of interest here and not an exact analysis.

Type I. Tranquil flow, small width reduction

The earliest measuring flumes are exemplified by figure 2, which shows subcritical flow entering a flume with zero bed slope, S_o, and side contractions. The side contractions reduce the width of the flume, resulting in an increase in unit discharge.

Because there is minor energy loss and no change in bed elevation, the specific energy in the throat is about the same as in the approach. With constant specific energy, the effect of a small width contraction is a lowering of the water surface in the throat. In the example shown in figure 2, the side contraction between point A and point B causes a change in the discharge per unit width. The transition is illustrated in figure 1, as the point A on the curve $q=1$ and the point B on the curve $q=2$. Owing to the small degree of contraction, critical depth is not accomplished (point C on curve $q=3$ in fig. 1). In this type of flume it is necessary to measure the head (vertical depth) in both the approach section and in the throat. For this reason, this type of flume, called a subcritical-flow meter, is seldom used today.

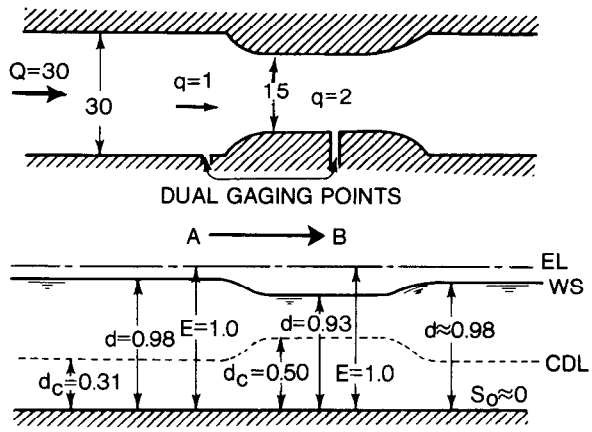

EXPLANATION OF TERMS AND UNITS
(For figures 2 through 7, units have been omitted and are in feet or as shown below)

CDL, Critical depth line
d, Depth in feet
d_C, Critical depth in feet
E, Specific energy in feet
Q, Discharge in ft^3/s
q, Unit discharge in $ft^3/s/ft$
S_C, Critical slope
S_O, Bed slope of flume
WS, Water surface

FIGURE 2.—Type I control: subcritical-flow contraction obtained by small width reduction, horizontal bed.

Type II. Critical flow, large width reduction

Further contraction of the throat width, as in type I, results in increasing the unit discharge until a critical width is reached (see fig. 3). This width corresponds to point C on figure 1 and represents the minimum specific energy that exists at the critical-flow depth. Earlier flume designs were based on measuring this depth in the throat because of the unique critical-depth discharge relationship of equation 3.

The discharge equations for flumes conform closely to this relationship, but it can be seen that depths in the vicinity of critical flow can change radically with little change in discharge. Thus, flow close to critical is very unstable, constantly attempting to become either subcritical or supercritical.

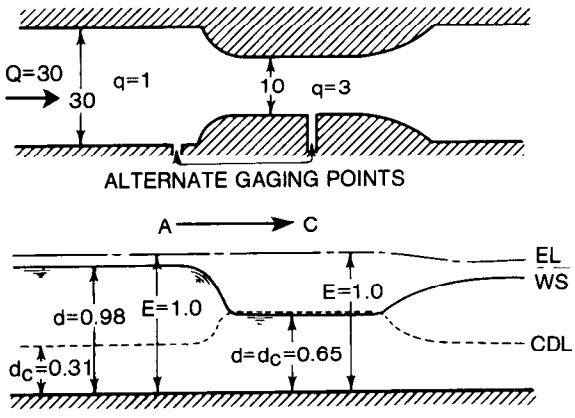

FIGURE 3.—Type II control: critical-flow contraction obtained by large width reduction, horizontal bed (for an explanation of symbols and units, see fig. 2).

In both type I and type II controls, the flume slope may be zero or nearly zero owing to the relatively small energy losses experienced.

In a type II control, head may be measured at either of two locations, in the immediate approach to the flume or in the throat. Measurement in the approach will yield a more sensitive head-discharge relation (discharge rating) because changes in discharge will result in greater changes in depth in subcritical flow than would like changes in discharges in critical flow. Unfortunately, the head-discharge relation in the approach may be unstable owing to approach conditions such as scour and fill. Consequently, head is usually measured in the throat to alleviate influence from either upstream or downstream. Approach conditions can have some influence on flow in the throat, but it is generally insignificant. The location at which critical depth is first reached may shift further downstream into the throat as a result of excessive deposition in the approach. For this reason and to avoid possible flow separations near the entrance, head measurements in the throat should not be too close to the entrance.

A type II control, called a critical-depth meter, has the advantage of requiring measurement of head at only one location; it has the disadvantage that free overfall is required to sustain flows at critical depths in the throat. Measurement of head upstream is not entirely satisfactory because of possible approach influences, nor is it satisfactory in the throat because of widely fluctuating water surfaces. As will be shown in the discussion of type IV and VI controls, much is to be gained by placing such a flume on a slope greater than critical.

Type III. Tranquil flow, small increase in bed elevation

Types I and II controls represent methods of obtaining measuring flumes by contracting the flow using width reductions. In these flumes, as can be seen on the specific energy diagram in figure 1, the specific energy, E, is constant from approach to throat. All changes in depths from the approach to the throat are accomplished by going to successively larger q curves.

Flow conditions similar to those produced by the side contractions, as in types I and II, can also be obtained by increasing the bed elevation. In the absence of side contractions, the unit discharges will not vary from approach to throat, but the specific energy, E, will change.

For a type III control with $E = 1.0$ in the approach and $q = 1.0$ throughout, the change in depth must be along a constant q curve. As illustrated in figure 4, this can only be effected by a reduction in specific energy. Hence, if the floor of the flume is arbitrarily raised 0.25 foot above the approach bed, the result is a direct reduction in E to 0.75 foot over the sill, point D on figure 1. This yields a depth of approximately 0.72 foot, which is still subcritical. Because q is the same in both approach and over the sill, d_c is 0.31 foot for both.

Raising the bed even more produces lower and lower depths across the sill until critical depth is reached, point F on figure 1. At this depth, the specific energy is minimal, $E = 0.47$ foot. Hence, a sill height of 0.53 foot is the

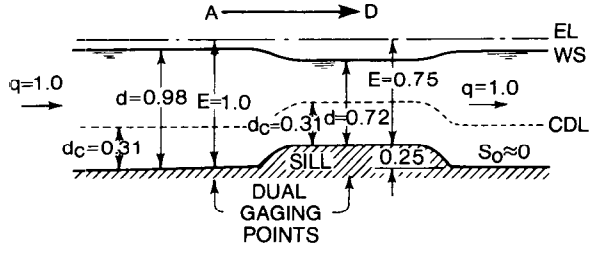

FIGURE 4.—Type III control: subcritical-flow contraction obtained by small increase in bed elevation, horizontal bed (for an explanation of symbols and units, see fig. 2).

critical height because a sill of greater height will produce increased stages upstream. A critical depth of 0.31 foot will exist at the sill.

Flumes that incorporate sills in their design are the least frequently used. This is so because one of the primary advantages of flumes as discharge meters is their self-cleaning characteristics; as might be expected, sills form a partial barrier to the approaching flow that encourages deposition. Therefore, there would appear to be no advantage to flume designs incorporating sills or raised floors.

Type IV. Supercritical flow, width reduction, steep slope

When flumes are on approximately zero slope, as in types I, II, and III, critical depth is the minimum depth possible in the flume. When the flow in the throat reaches the critical discharge, a critical contraction has been reached. Further contraction from the sides, the bottom, or both will not produce supercritical flow.

The design of a flume with supercritical flow in the throat can be accomplished only by increasing the available specific energy from the approach into the throat. Whereas a rise in the flume floor decreases the specific energy, a drop in the flume floor or an increase in flume slope serves to increase the specific energy. Type IV control in figure 5, therefore, is identical with type II, but has been placed on a slope to supply the required increase in specific energy to produce supercritical flow in the throat. Thus, for a particular discharge, the path A-B-C-G in figure 1 is followed.

Type V. Supercritical flow, width reduction, drop in bed elevation

Supercritical flow may also be obtained by abruptly dropping the bed as in type V (see fig. 6). As with type IV, the path A-B-C-G in figure 1 is followed: A represents flow in the approach; movement from A to C from one q curve to successively higher ones results from the side contraction; and movement from C to G is caused by the increased specific energy provided by the drop but no further contraction.

Types IV and V flumes are called supercritical-flow meters. As in the critical-flow meters, measurement of head is made either in the throat or the approach. The advantages and disadvantages of measuring in the approach have already been discussed. As previously emphasized, measurement of head in critical flow, as at point C, is undesirable since there may be large fluctuations in depth with little or no change in discharge. Therefore, head is customarily measured downstream of the point of critical depth in the region of supercritical flow. Measurement of head here may be difficult owing to the high velocities encountered under such conditions. As can be seen in figure 1, a particular

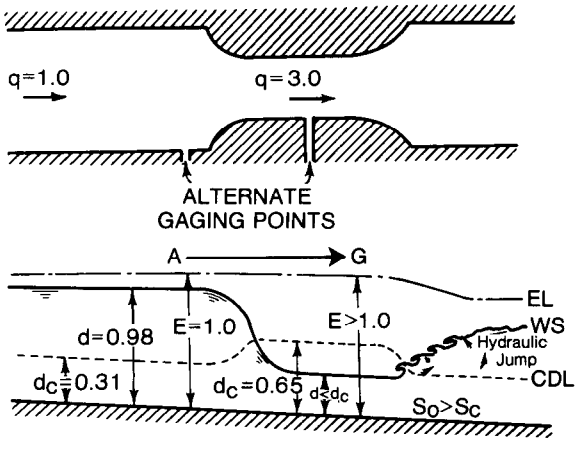

FIGURE 5.—Type IV control: supercritical-flow contraction obtained by width reduction and sloping bed (for an explanation of symbols and units, see fig. 2).

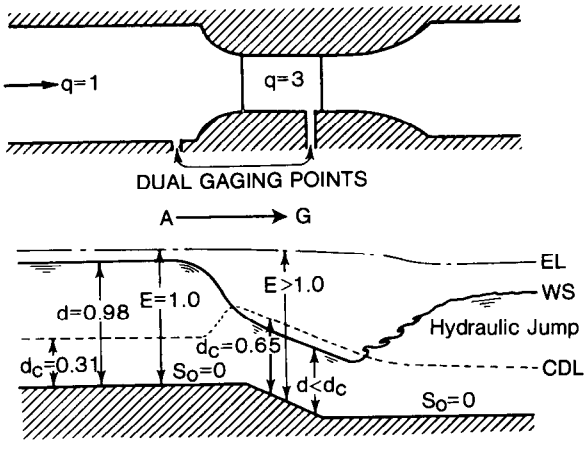

FIGURE 6.—Type V control: supercritical-flow contraction obtained by width reduction and drop in bed (for an explanation of symbols and units, see fig. 2).

disadvantage of measuring head in this region is the lack of rating sensitivity compared with measurements in subcritical flow. The primary advantage of a supercritical-flow flume is that it has optimum self-cleaning and scouring characteristics. A head-discharge relation (discharge rating) based on head measurements in the region of supercritical flow is the least influenced by disturbances either upstream or downstream and hence is apt to be the most stable. By the same token, such flumes are the most capable of stable operation with high submergences.

Type VI. Supercritical flow, steep slope

Contraction and increase in specific energy are not necessary for supercritical flow to occur. A sufficient increase in specific energy alone can produce supercritical flow. In an ordinary stream-gaging control, this flow is obtained simply by the drop created by the physical presence of the control.

As can be seen in figure 7, flow at supercritical depths can also be produced over a broad crest by simply giving it sufficient downstream slope.

A slope of 1 degree is usually sufficient to produce critical depth in the vicinity of the upstream edge of the apron, but waves and disturbances are apt to be numerous downstream. Such wave disturbances occur when flow across the apron is too close to critical and not well within the supercritical-flow range. On ordinary concrete aprons, slopes from 2 1/2 to 5 percent have been found to yield depths well within the supercritical-flow range.

For a type VI control, if approach conditions were not subject to change, a stable discharge rating could be expected to exist by measuring head in the subcritical region upstream. If accurate head measurements could be made in the region of supercritical flow down on the sloping crest, a stable discharge rating would be obtained regardless of upstream or downstream disturbances. However, such a rating would be very insensitive. The addition of side contractions improves the rating sensitivity. Thus, the ideal flume is basically a sloping broad-crested weir with side contractions.

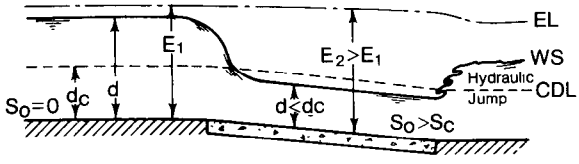

FIGURE 7.—Type VI control: supercritical flow obtained by steepening slope (for an explanation of symbols and units, see fig. 2).

Parshall Flume

Development

The development of measuring flumes was stimulated primarily by the need for simple and accurate devices for metering irrigation flows. Prior to 1920 the devices used were either weirs or flumes of the Venturi type; each had its disadvantages. Head loss and backwater caused by a weir set high in a canal was intolerable if the canal banks were low; when the weir crest was set at a lower elevation, the weir often operated at a degree of submergence for which discharges could be computed with less reliability. The Venturi flume, which is, in essence, a short stabilized reach of channel that includes a width-contracted section, usually operates more satisfactorily than a weir with regard to head loss and submergence effect. However, this flume requires the measurement of head both in the contracted section and in the upstream approach reach. The Venturi flume, developed by V. M. Cone (1917), was the forerunner of the Parshall flume. R. L. Parshall (1926) proposed changes in the design of the Venturi flume, the most important of which was a sharp drop in the slope of the floor through the throat. The break in floor slope at the entrance to the throat causes critical depth to occur there, thus providing a control that commonly requires only a single head measurement in the approach reach for a determination of discharge.

The throat width of the earlier Parshall flumes ranged from 3 to 8 feet. Flumes with throat widths of 10 to 50 feet were later built and field calibrated by Parshall (1953). More recently Parshall flumes with throat widths of 1 and 2 inches were calibrated by Robinson

(1957). Head-discharge relations are thus available for a wide range of throat widths.

Although the Parshall flume was developed for use in irrigation systems, it has also been used as a gaging-station control in natural streams. It will pass small- to medium-sized sediment without the rating being affected. Poor channel alinement and uneven distribution of flows in the approach may affect the discharge ratings. The flume is insensitive at low flows because of its rectangular cross section. During low-flow periods of the year, to obtain the required sensitiveness the flume is sometimes operated with a temporary V-notch weir installed at the entrance to the throat. Each flume size is limited in the range of discharge it can measure and thus is better suited to irrigation canals and other manmade systems.

Configuration

The general design of the Parshall flume is shown in figure 8. The dimensions, corresponding to the letters in figure 8 for various sizes of flumes, are given in table 1. The flumes are designated by the width, W_T, of the throat. Flumes with throat widths from 3 inches to 8 feet have a rounded entrance whose floor slope is 25 percent. The smaller and larger flumes do not have this feature, but it is doubtful whether the performance of any of the flumes is significantly affected by the presence or absence of the entrance feature as long as approach conditions are satisfactory.

The Parshall flume is a type V control with supercritical flow existing in the throat section, but because head is measured upstream of critical depth, it is classified here as a critical-depth meter. Head is measured downstream to indicate when submerged-flow conditions exist. The datum for both upstream and downstream gages is the level floor in the approach. The sloping floor, length L_D in figure 8, in the downstream diverging section, is designed to reduce scour downstream and to produce more consistent head-discharge relations under conditions of

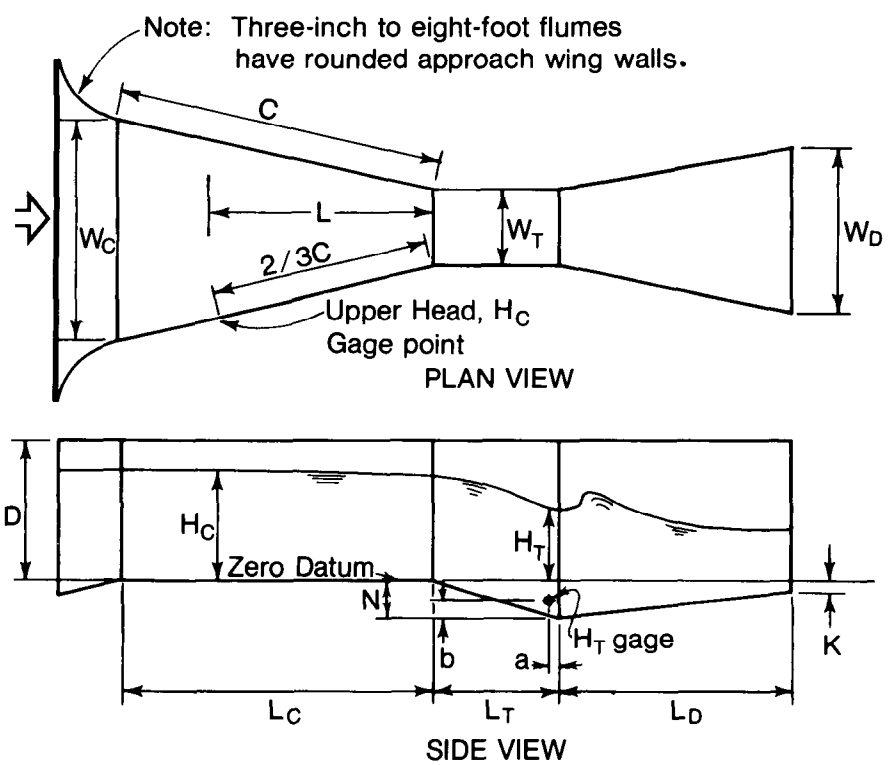

FIGURE 8.—Configuration and descriptive nomenclature for Parshall flumes (see table 1 and "Symbols, Definitions, and Units" for dimensions and definitions of symbols).

TABLE 1.—*Dimensions and capacities of standard Parshall flumes*

Widths			Axial lengths			Wall Depth in Converging Section	Vertical distance below crest		Converging wall length	Gage Points			Free-flow Capacities, in cubic feet per second	
Throat W_T	Upstream end W_C	Downstream end W_D	Converging section L_C	Throat section L_T	Diverging section L_D	D	Dip at Throat N	Lower end of flume K	C*	H_C, wall length upstream of crest**	H_T a	H_T b	Minimum	Maximum
Inches	*Feet*	*Feet*	*Feet*	*Feet*	*Feet*	*Feet*	*Feet*	*Feet*	*Feet*	*Feet*	*Feet*	*Feet*		
1	0.549	0.305	1.17	0.250	0.67	0.5-0.75	0.094	0.062	1.19	0.79	0.026	0.042	0.005	0.15
2	.700	.443	1.33	.375	.83	0.50-0.83	.141	.073	1.36	.91	.052	.083	.01	.30
3	.849	.583	1.50	.500	1.00	1.00-2.00	.188	.083	1.53	1.02	.083	.125	.03	1.90
6	1.30	1.29	2.00	1.00	2.00	2.0	.375	.25	2.36	1.36	.167	.25	.05	3.90
9	1.88	1.25	2.83	1.00	1.50	2.5	.375	.25	2.88	1.93	.167	.25	.09	8.90
Feet														
1.0	2.77	2.00	4.41	2.0	3.0	3.0	.75	.25	4.50	3.00	.167	.25	.11	16.1
1.5	3.36	2.50	4.66	2.0	3.0	3.0	.75	.25	4.75	3.17	.167	.25	.15	24.6
2.0	3.96	3.00	4.91	2.0	3.0	3.0	.75	.25	5.00	3.33	.167	.25	.42	33.1
3.0	5.16	4.00	5.40	2.0	3.0	3.0	.75	.25	5.50	3.67	.167	.25	.61	50.4
4.0	6.35	5.00	5.88	2.0	3.0	3.0	.75	.25	6.00	4.00	.167	.25	1.30	67.9
5.0	7.55	6.00	6.38	2.0	3.0	3.0	.75	.25	6.50	4.33	.167	.25	1.60	85.6
6.0	8.75	7.00	6.86	2.0	3.0	3.0	.75	.25	7.0	4.67	.167	.25	2.60	103.5
7.0	9.95	8.00	7.35	2.0	3.0	3.0	.75	.25	7.5	5.0	.167	.25	3.00	121.4
8.0	11.15	9.00	7.84	2.0	3.0	3.0	.75	.25	8.0	5.33	.167	.25	3.50	139.5
10	15.60	12.00	14.0	3.0	6.0	4.0	1.12	.50	9.0	6.00			6	300
12	18.40	14.67	16.0	3.0	8.0	5.0	1.12	.50	10.0	6.67			8	520
15	25.0	18.33	25.0	4.0	10.0	6.0	1.50	.75	11.5	7.67			8	900
20	30.0	24.00	25.0	6.0	12.0	7.0	2.25	1.00	14.0	9.33			10	1340
25	35.0	29.33	25.0	6.0	13.0	7.0	2.25	1.00	16.5	11.00			15	1660
30	40.4	34.67	26.0	6.0	14.0	7.0	2.25	1.00	19.0	12.67			15	1990
40	50.8	45.33	27.0	6.0	16.0	7.0	2.25	1.00	24.0	16.00			20	2640
50	60.8	56.67	27.0	6.0	20.0	7.0	2.25	1.00	29.0	19.33			25	3280

*For sizes 1 to 8 feet, $C=W_T/2+4$ feet.

**H_C located ⅔ C distance from crest for all sizes; distance is wall length, not axial.

Note: Flume sizes 3 inches through 8 feet have approach aprons rising at 25 percent slope and the following entrance roundings: 3 through 9 inches, radius=1.33 feet; 1 through 3 feet, radius=1.67 feet; 4 through 8 feet, radius=2.00 feet.

submergence. The percentage of submergence for Parshall flumes is computed by the formula

$$(H_T/H_C)\times 100 \qquad (4)$$

where H_C is the head in the converging section and H_T is the head in the throat section. Where free-flow conditions exist for all flows, the downstream gage, H_T, may be omitted and the entire diverging reach may be dispensed with if desired. That simplification has been used in the design of small portable Parshall measuring flumes.

Head-discharge relations

Tables 2 and 3 summarize the discharge ratings at H_C under conditions of free flow for flumes of various sizes. Although the free-flow head-discharge relations for the various flumes were derived experimentally, all relations can be expressed closely by the following equation (Davis, 1963):

$$Y_o+\frac{Q_o^2}{2Y_o^2(1+0.4X_o)^2}=1.351Q_o^{0.645}, \qquad (5)$$

in which Y_o = nondimensional depth, H_C/W_T,
Q_o = nondimensional discharge, $Q/g^{1/2}W_T^{5/2}$,
X_o = nondimensional distance, L/W_T,
H_C = head at measuring section, in feet,
W_T = channel width at throat, in feet,
Q = discharge, in cubic feet per second,
g = acceleration of gravity, in feet per second squared, and
L = distance from throat crest to measuring section, in feet.

For flumes with throat widths no greater than 6 feet, the following simplified form of the above equation (Dodge, 1963) can be used:

$$Y_o=1.190Q_o^{0.645}X_o^{0.0494}. \qquad (6)$$

These equations may be helpful in developing discharge ratings for Parshall flumes of nonstandard dimensions or for those having finished dimensions differing from the standard.

When the head at H_T is relatively high, the free-flow discharge corresponding to any given value of H_C is reduced. The percentage of submergence, or value of $(H_T/H_C)\times 100$, at which the free-flow discharge is first affected, varies with the size of the flume. For flumes whose throat width is less than 1 foot, the submergence must exceed 50 percent before there is any backwater effect from downstream;

TABLE 2.—*Discharge ratings for 2- to 9-inch Parshall flumes under free-flow conditions*

H_C (feet)	Flume size: 2 inches (ft^3/s)	3 inches (ft^3/s)	6 inches (ft^3/s)	9 inches (ft^3/s)
0.1	0.02	0.03	0.05	0.09
.2	.06	.08	.16	.26
.3	.11	.15	.31	.49
.4	.17	.24	.48	.76
.5	.24	.34	.69	1.06
.6	.31	.45	.92	1.40
.7	.40	.57	1.17	1.78
.8		.70	1.45	2.18
.9		.84	1.74	2.61
1.0		.89	2.06	3.07
1.1			2.40	3.55
1.2			2.75	4.06
1.3			3.12	4.59
1.4			3.51	5.14
1.5				5.71
1.6				6.31
1.7				6.92
1.8				7.54
1.9				8.20

TABLE 3.—*Discharge ratings for 1- to 50-foot Parshall flumes under free-flow conditions*

H_C	1 foot	1 5 feet	2 feet	3 feet	4 feet	5 feet	6 feet	7 feet	8 feet
feet	cfs	cfs	cfs	cfs	cfs	cfs	cfs	cfs	cfs
0.10	0.11	0.15							
.15	.20	.30	0 42	0.61					
.20	.35	.51	.66	.97	1.26	1.55			
.25	.49	.71	.93	1 37	1.80	2.22	2.63	3.02	3.46
.30	.64	94	1.24	1.82	2.39	2.96	3.52	4.08	4.62
.4	.99	1.47	1.93	2.86	3.77	4.68	5.57	6.46	7.34
.5	1.39	2.06	2 73	4.05	5.36	6.66	7.94	9.23	10.5
.6	1.84	2.73	3.62	5.39	7.15	8.89	10.6	12.4	14.1
.7	2.33	3.46	4.60	6.86	9.11	11.4	13.6	15.8	18.0
.8	2.85	4.26	5.66	8.46	11.3	14.0	16.8	19.6	22.4
.9	3.41	5.10	6.80	10.2	13.6	16.9	20.3	23.7	27.0
1.0	4.00	6.00	8.00	12.0	16.0	20.0	24.0	28.0	32.0
1.2	5.28	7.94	10.6	16.0	21.3	26.7	32.1	37.5	42.9
1.4	6.68	10.1	13.5	20 3	27.2	34.1	41.1	48.0	55.0
1.6	8.18	12.4	16.6	25.1	33.6	42.2	50.8	59.4	68.1
1.8	9.79	14.8	19.9	30.1	40.5	50.8	61.3	71.8	82.3
2.0	11.5	17.4	23 4	35.5	47 8	60.1	72.5	84.9	97.5
2.2	13.3	20.2	27 2	41.3	55 5	69 9	84.4	98 9	113 6
2.4	15.2	23.0	31.1	47.3	63.7	80.3	97.0	113.7	130.7

H_C	10 feet	12 feet	15 feet	20 feet	25 feet	30 feet	40 feet	50 feet
feet	cfs	cfs	cfs	cfs	cfs	cfs	cfs	cfs
0.30	5.75	6 75	8 4	11.1	13 8	16.5	21.8	27.3
0.4	9.05	10.85	13 3	17.7	21 8	26.1	34.6	43.2
0.5	13 1	15.4	19.1	25.1	31.2	37.2	49.5	61.8
0.6	17 5	20 6	25.5	33.7	41.8	50.0	66.2	82.6
0.7	22.2	26.2	32.7	43 1	53.4	64.0	84.8	105.5
0.8	27.5	32.7	40.4	53.4	66.3	79.2	105	131
0.9	33.3	39.4	48.9	64.3	80.1	95.5	127	158
1.0	39.4	46 8	57 9	76 3	94.8	113.2	150	187
1.2	53 7	62.6	77.3	102.0	127.0	152	201	250
1.4	67.4	80.1	99 0	130.5	162	194	257	320
1.6	83.5	99.1	122 8	162	201	240	318	396
1.8	103 4	119.8	148.0	195	243	290	384	479
2.0	119.4	141.8	175.3	232	287	343	454	567
2.2	139.0	165.0	204	269	334	400	530	660
2.4	164 6	189.8	235	310	384	459	609	758
2.6	181.7	215.7	267	352	437	522	692	864
3.0	228.4	271.2	335	442	549	656	870	1084
3.5	294	347	429	566	703	840	1113	1387
4 0	363	430	531	700	870	1040	1379	1717
4.5	437	518	641	846	1051	1255	1664	2073
5.0	517	614	759	1002	1244	1486	1970	2453
5 5			885	1166	1448	1730	2295	2860
6.0			1016	1340	1664	1988	2638	3285

Note Available data indicates that extension of the above ratings to greater heads is reliable

for flumes with throat width from 1 to 8 feet, the threshold submergence is 70 percent; for flumes with throat width greater than 10 feet, the threshold submergence is 80 percent. Figure 9 shows the discharge ratings for Parshall flumes, from 2 to 9 inches, under both free-flow and submergence conditions. Figure 10 shows the correction in discharge for flumes that have

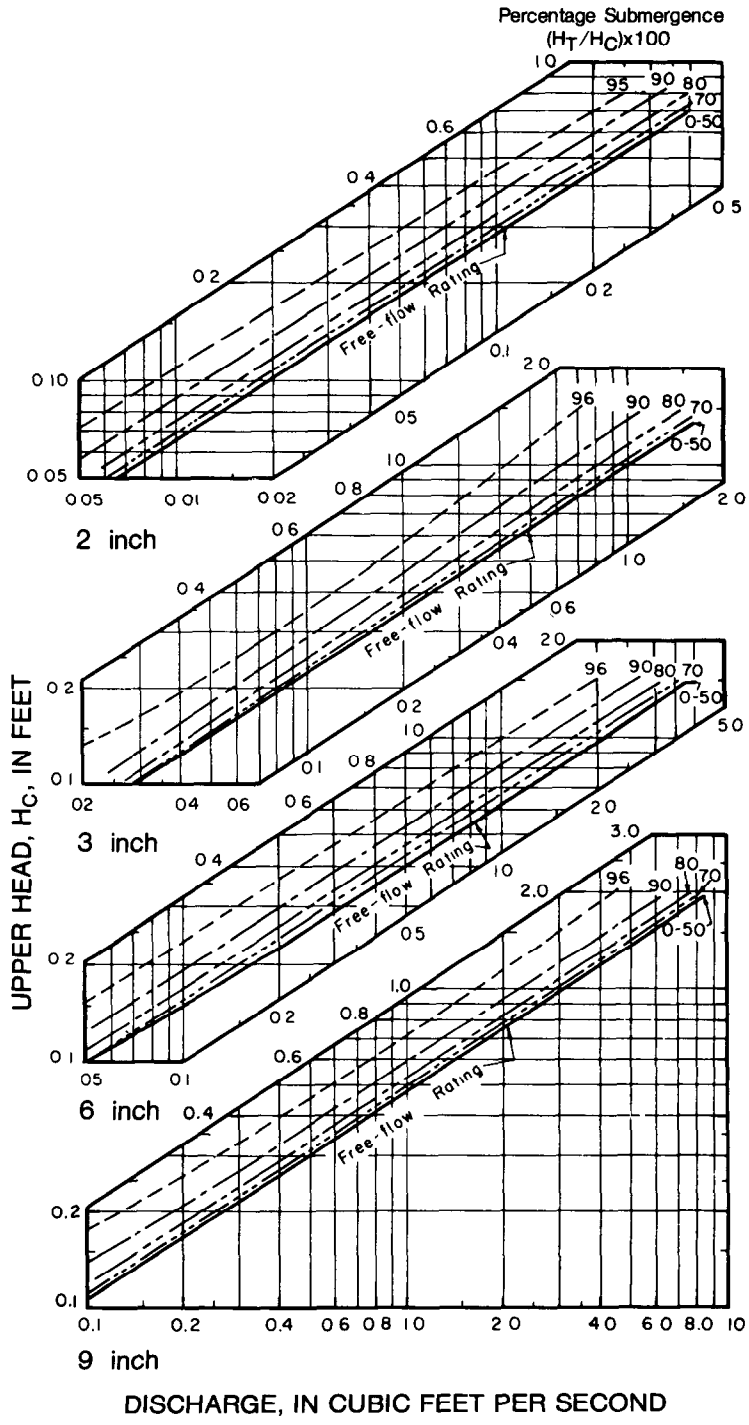

FIGURE 9.—Discharge ratings for "inch" Parshall flumes for both free-flow and submergence conditions.

throat widths between 1 and 50 feet. The correction is always negative and is applied to the free-flow discharges. The appropriate correction factor (k_s) for a flume size is applied to the discharge corrections read from the graphs (fig. 10). In other words,

$$Q_s = Q_f - k_s Q_c, \tag{7}$$

where Q_s = discharge under submergence conditions,

Q_f = discharge under free-flow conditions, and

Q_c = discharge correction unadjusted for flume size.

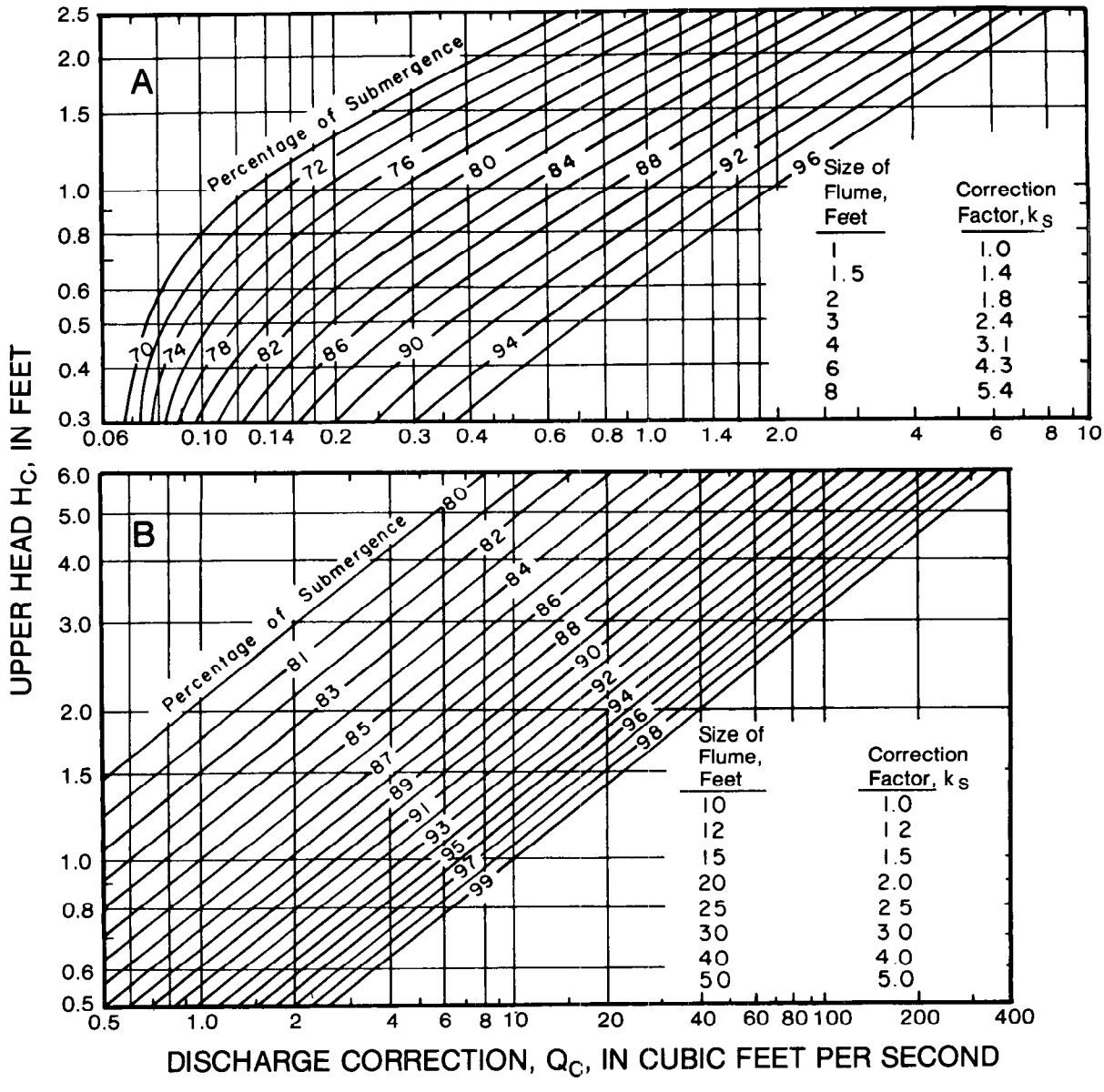

FIGURE 10.—Correction factors for submerged flow through A, 1- to 8-foot, and B, 10- to 50-foot Parshall flumes.

Portable Parshall Flume

Configuration

The portable Parshall flume is a device for determining discharge when depths are too shallow and velocities too low for a current-meter measurement of discharge; it is not used as a gaging-station control. The portable flume used by the Geological Survey is a modified form of the standard Parshall flume, with a 3-inch throat. The modification consists, primarily, of the removal of the downstream diverging section of the standard flume. The purpose of the modification is to reduce the weight of the flume and to make it easier to install. Because the portable Parshall flume has no downstream diverging section, it cannot be used for measuring flows when the submergence ratio exceeds 0.6. The submergence ratio is the ratio of the downstream head to the upstream head (see equation 4). Although a submergence ratio of 0.6 can be tolerated without affecting the rating of the portable flume, in practice the flume is usually installed so that the flow passing the throat has virtually free fall. This may be accomplished by building up the streambed a couple of inches under the level converging floor of the flume (see fig. 4).

Figure 11 shows the plan and side views of the portable Parshall flume. Upstream head may be measured by a recorder placed on the small stilling well that is hydraulically connected to the flow by a 3/8-inch hole. The discharge rating (head-discharge relation) for the flume is given in table 4; the discharge corresponding to a given head is slightly greater for the portable flume than it is for the standard Parshall flume, with a 3-inch throat.

Installation and operation

When installing the flume in a channel, care must be taken to level the floor of the converging section both laterally and along its longitudinal axis. The level bubble that is attached to one of the braces (fig. 11) may not be sufficient unless its correctness is confirmed by comparing with a carpenter's level placed in the actual floor of the flume. Soil or streambed material is then packed around the flume to prevent leakage under and around it. Figure 12 shows a typical field installation. After the flume is installed, water will pool upstream from the structure. Head readings should be observed until they indicate the pool has stabilized; readings should then be taken at half-minute intervals for about 3 minutes. The mean value of those readings is the head used in table 4 to obtain the discharge.

Calibration tests by the authors for 11 of the 3-inch modified Parshall Flumes indicated rather sizable differences between the discharge rating supplied here and that measured in the laboratory. Typically, especially at low heads, measured flows were about 7 percent greater than given in table 4. Some of the differences were attributed to poor dimensional control, especially where welded construction may have caused warping. Given these measurement differences, consideration should be given to calibrating each flume, either in a laboratory or in the field if other independent and accurate means of discharge measurement can be devised. In many instances, for the lower discharges, volumetric measurements can be made just downstream of the flume for confirmation or adjustment of the standard rating.

HS, H, and HL Flumes

Configuration

The U.S. Soil Conservation Service (U.S. Agricultural Research Service, 1962) has developed flumes, designated HS, H, and HL, for use on small watersheds. The configuration and proportional dimensions of the three flumes are shown in figure 13, where all dimensions are expressed in terms of the height of a given flume, D. A flume of the HS, H, or HL type is trapezoidal in cross section, and the side walls converge in the downstream direction to promote self-cleaning of the flume floor. The level floor of the flume becomes extremely narrow at its downstream end, providing greater sensitiveness to the discharge rating. In essence these flumes are quasi-weirs since they have zero bottom contraction. Critical flow is established at the downstream end of the flume by a free fall. The flume is intended to operate under free-fall conditions, but submergences up to 50 percent

have no significant effect on the head-discharge relation. The head (vertical depth) is measured in the converging approach reach, upstream from the end of the flume.

The three flumes differ relatively little in general configuration, but the differences in proportional dimensions give the HL flume (L for large) the greatest capacity of the three flumes and the HS flume (S for small) the smallest capacity of the three. This is borne out by table 5, which gives the discharge ratings for the various sizes of HS, H, and HL flumes.

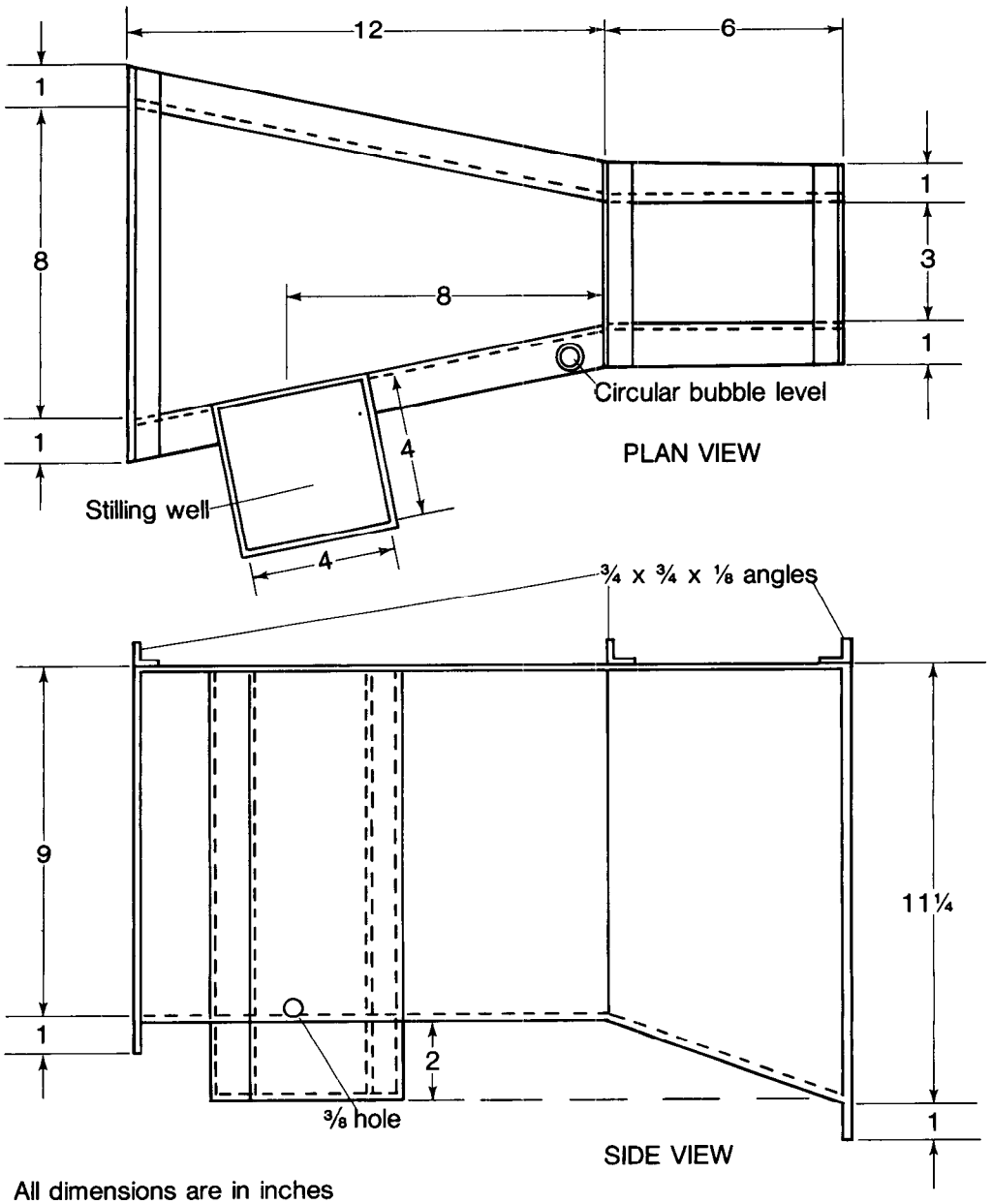

All dimensions are in inches
Material: ⅛ inch sheet aluminum
Welded or bolted construction
Note: This stilling well can accommodate a 3-inch float if used with a stage recorder for continuous measurement.

FIGURE 11.—Working drawing of modified 3-inch Parshall flume.

TABLE 4.—*Discharge ratings for 3-inch modified Parshall flumes*

Head (feet)	Discharge (ft^3/s)	Head (feet)	Discharge (ft^3/s)	Head (feet)	Discharge (ft^3/s)
0.01	0.0008	0.21	0.097	0.41	0.280
.02	.0024	.22	.104	.42	.290
.03	.0045	.23	.111	.43	.301
.04	.0070	.24	.119	.44	.312
.05	.010	.25	.127	.45	.323
.06	.013	.26	.135	.46	.334
.07	.017	.27	.144	.47	.345
.08	.021	.28	.153	.48	.357
.09	.025	.29	.162	.49	.368
.10	.030	.30	.170	.50	.380
.11	.035	.31	.179	.51	.392
.12	.040	.32	.188	.52	.404
.13	.045	.33	.198	.53	.417
.14	.051	.34	.208	.54	.430
.15	.057	.35	.218	.55	.443
.16	.063	.36	.228	.56	.456
.17	.069	.37	.238	.57	.470
.18	.076	.38	.248	.58	.483
.19	.083	.39	.259	.59	.497
.20	.090	.40	.269		

FIGURE 12.—Modified 3-inch Parshall flume installed for measuring discharge.

Construction and Installation

The HS, H, and HL flumes have the advantage of simplicity of design and construction. The three plane surfaces that comprise the flume are usually made of metal plates and can be prefabricated for assembly in the field. The flumes are usually mounted or cast into a concrete headwall. In many installations, lightweight sheet piling can be quickly driven to form both headwall and cutoff for the flumes.

Installation of the flumes should, wherever possible, be made with approach boxes depressed below the natural ground surface, as shown in figure 14. Where the watershed is small and the flow is dispersed, it may be necessary to use gutters to collect the run-off at the bottom of the slope and channel it into the approach box. The flume floor must be level. If silting is a problem, a 1-on-8 sloping false floor (fig. 14) can be installed to concentrate low flows and thereby reduce silting. The difference in calibration of a flume installation with a flat floor and one with a sloping false floor is less than 1 percent (U.S. Agricultural Research Service, 1962).

The stilling well for the stage recorder is usually made of sheet metal and attached to the flume wall. Openings to the flume are provided for ready exchange of water between the flume and the stilling well.

San Dimas Flume

Configuration

A flume for measuring the discharge of streams heavily laden with coarse debris was developed for use in the San Dimas Experimental Forest in southern California. Although

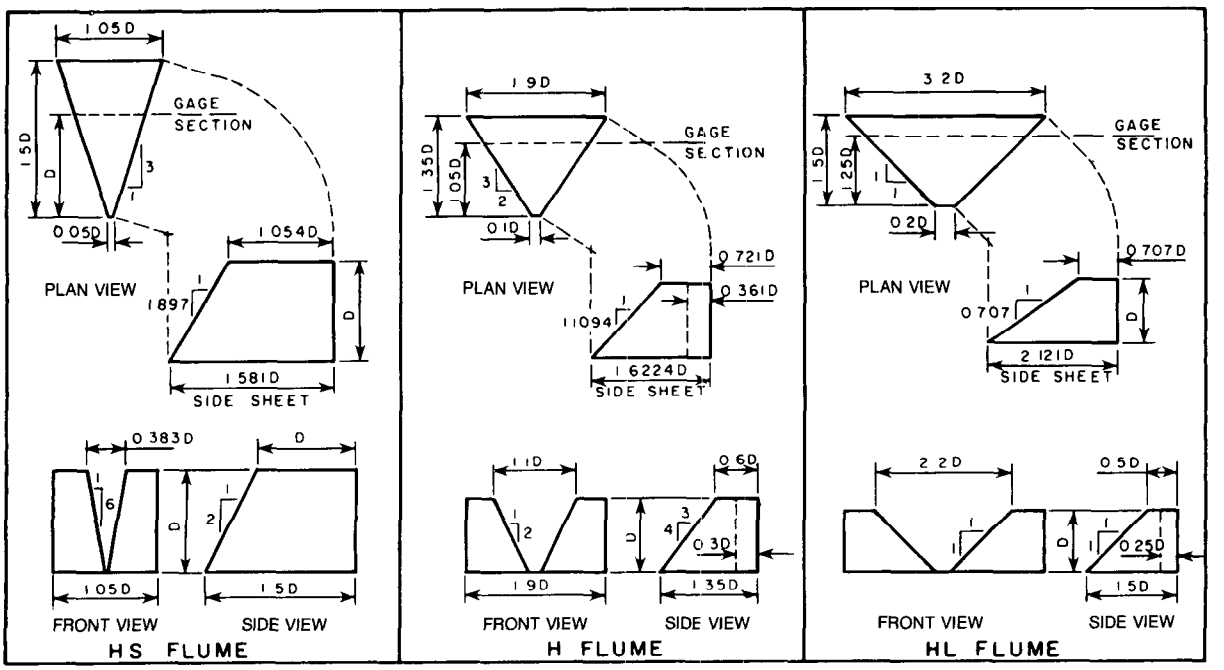

FIGURE 13.—Configuration and proportions of type HS, H, and HL flumes.

TABLE 5.—*Discharge ratings for various sizes of HS, H, and HL flumes*

Flume size D in feet	Head in feet																		
	0.05	0.10	0.20	0.30	0.40	0.50	0.60	0.80	1.00	1.2	1.4	1.6	1.8	2.0	2.5	3.0	3.5	4.0	4.5
									HS Flume										
0.04	0.0010	0.004	0.018	0.044	0.085														
.6	.0014	.005	.021	.049	.092	0.15	0.23												
.8	.0017	.006	.024	.054	.10	.16	.24	0.47											
1.0	.0021	.007	.027	.060	.11	.18	.26	.50	0.82										
									H Flume										
0.5	0.002	0.010	0.04	0.11	0.20	0.35													
.75	.003	.013	.05	.12	.22	.37	0.57												
1.0	.004	.015	.06	.13	.24	.40	.60	1.16	1.96										
1.5	.006	.020	.07	.16	.28	.45	.67	1.27	2.09	3.20	4.60								
2.0	.007	.025	.08	.18	.32	.51	.74	1.38	2.25	3.38	4.82	6.58	8.67	11.1					
2.5	.009	.030	.10	.21	.36	.56	.82	1.49	2.41	3.59	5.06	6.84	8.98	11.5	19.4				
3.0	.010	.035	.11	.23	.40	.62	.89	1.60	2.57	3.80	5.33	7.16	9.33	11.9	19.9	31.0			
4.5	.015	.050	.16	.31	.52	.78	1.11	1.94	3.04	4.42	6.11	8.12	10.50	13.2	21.6	32.7	46.8	63.9	84.5
									HL Flume										
4.0	0.03	0.09	0.28	0.56	0.94	1.42	2.01	3.53	5.56	8.06	11.2	14.9	19.2	24.3	39.9	60.3	85.9	117	

Note.—Ratings are in cubic feet per second and are derived from tests made by the Soil Conservation Service at Washington, D.C., and Minneapolis, Minn.

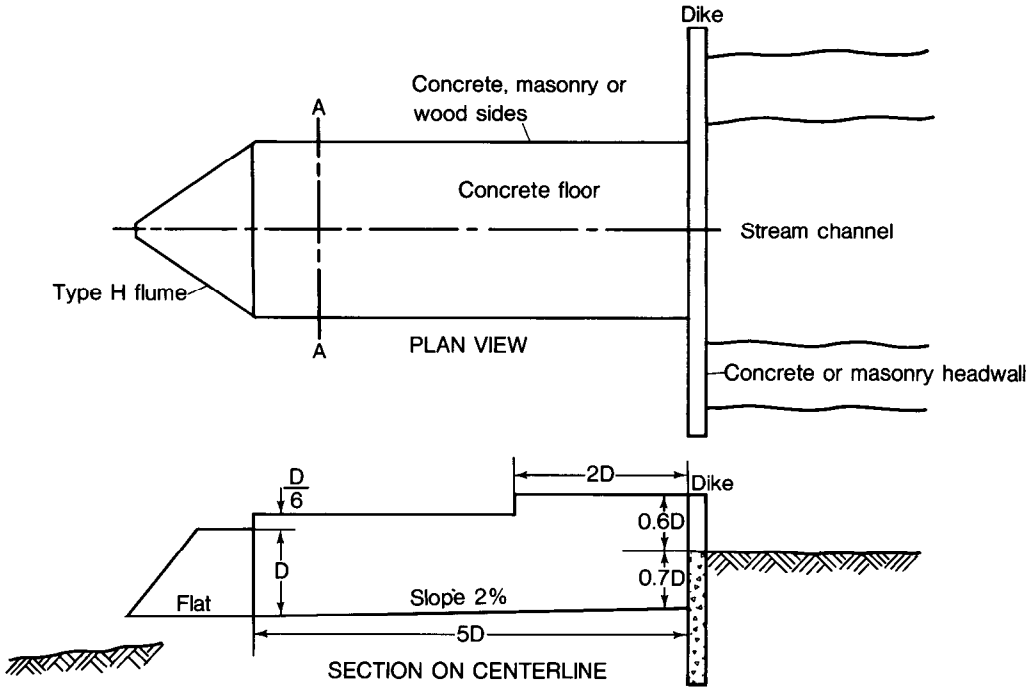

STRAIGHT HEADWALL INSTALLATION
(for use when flume is to be installed in a well-defined natural channel)

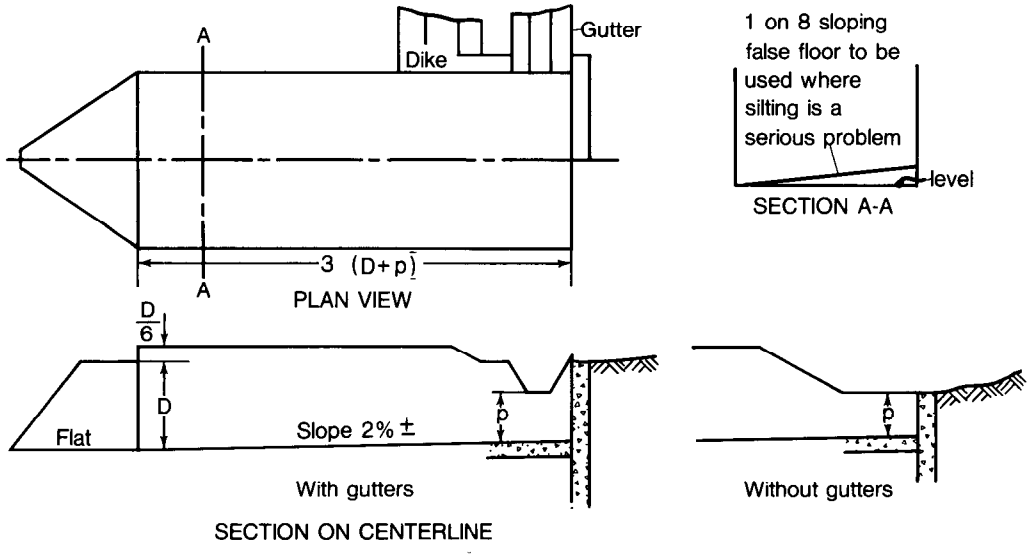

DROP BOX INSTALLATION
(for use when the runoff must be concentrated by gutters or dikes)

FIGURE 14.—Plans for straight headwall and drop-box installations of HS, H, and HL flumes (U.S. Agricultural Research Service, 1962, p. 31).

labeled a critical-flow flume by its designers (Wilm and others, 1938), the flume is a type IV, supercritical-flow flume in the terminology used here, because head (vertical depth) is measured in the supercritical-flow reach of the flume, 3 feet downstream from the critical-depth cross section. The configuration of the original San Dimas flume, including proportional dimensions for different sizes are shown in figure 15. The flume has a converging approach reach whose floor is flat, except for a hump at its downstream end which is the critical-depth cross section. The supercritical-flow reach is rectangular in cross section and has a slope of 3 percent. Because of this rectangular shape and the fact that supercritical depths are measured, the flume is extremely insensitive at low flows. For the accurate determination of low flows the San Dimas flume is generally operated in conjunction with sharp-crested weirs that can be bypassed when flows are high.

Head-discharge relations

Figure 15 also shows the head-discharge relations for various throat widths. The ratings for the 1-, 2-, and 3-foot flumes were determined from tests on structures of those sizes; the general equation developed from the ratings for the three flumes is also given in figure 15. That equation was found to be applicable for a 4-foot flume, but could not be extrapolated with great confidence to other throat widths. Therefore, figure 15 shows dashed-line discharge ratings, based on head-discharge measurements, for the 0.5- and 10-foot flumes.

Modified San Dimas Flume

Configuration

The San Dimas flume described on the preceding pages has been modified (Bermel,

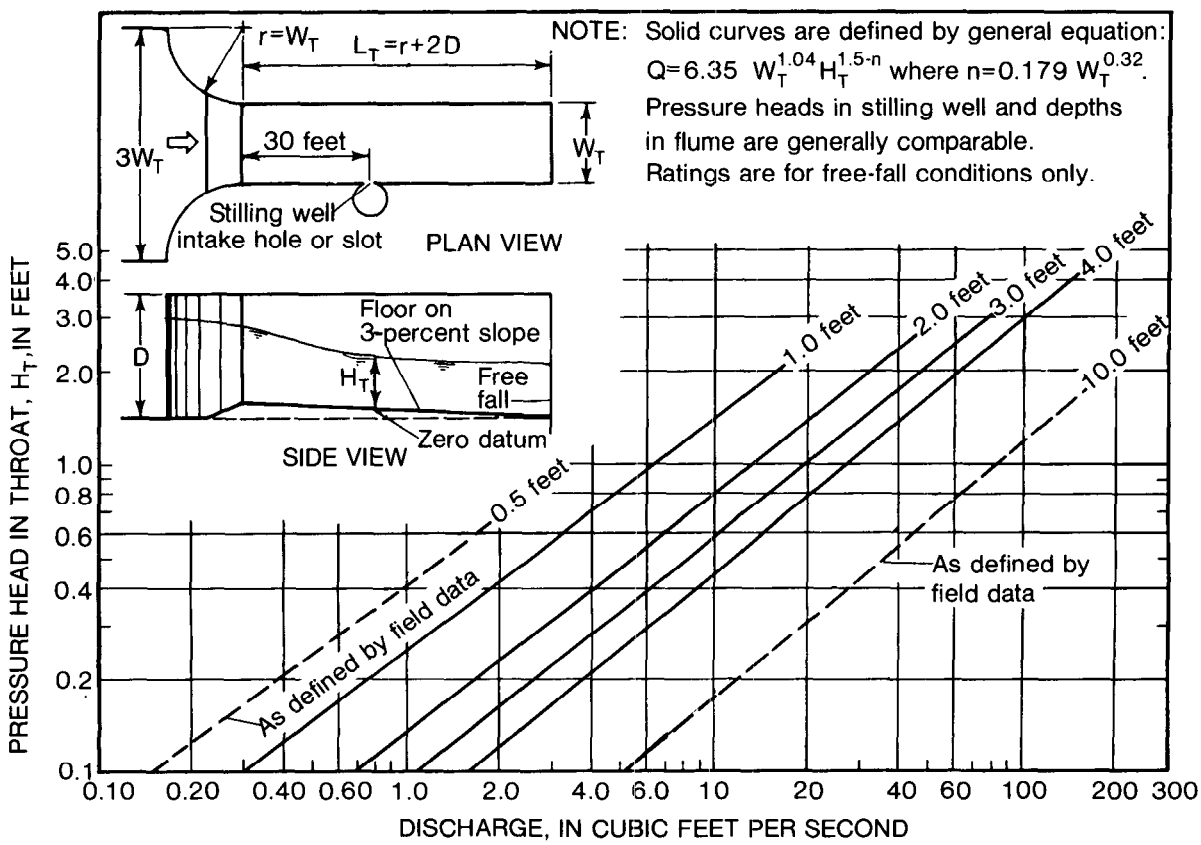

FIGURE 15.—Configuration and discharge ratings for different sizes of San Dimas flume as originally designed.

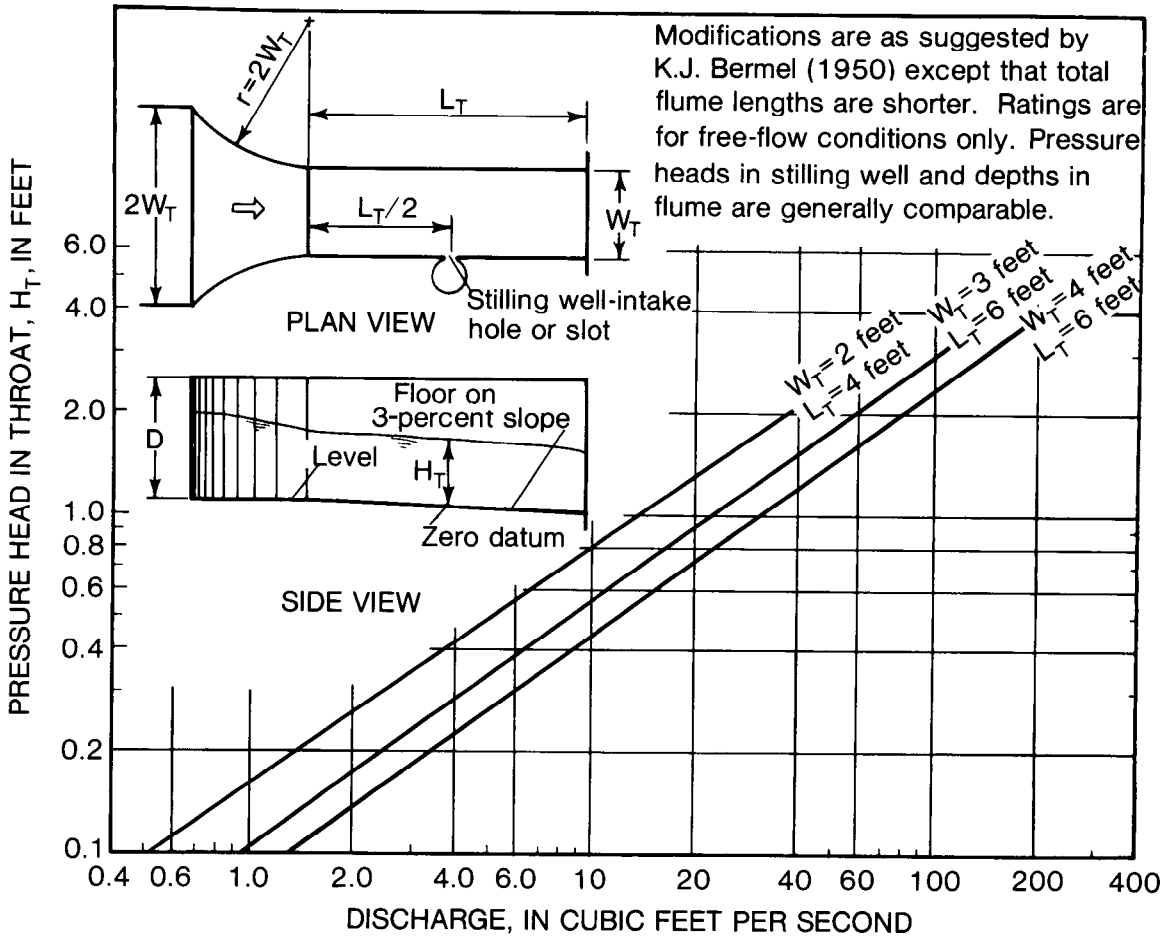

FIGURE 16.—Configuration and discharge ratings for different sizes of the modified San Dimas flume.

1950); the configuration and proportional dimensions of the modified flume are shown in figure 16. The principal changes in the design can be seen by comparison of figures 15 and 16. In figure 16, the approach reach has been narrowed relative to the width of the throat, but the convergence of the side walls of the approach reach has been made less abrupt. The hump at the downstream end of the approach reach has been removed. This is because the hump added nothing to the effectiveness of the flume. With or without the hump, the entrance to the rectangular part of the flume is the critical-depth cross section; the hump has the disadvantage of being a potential sediment trap. Another change in design involves the site for measuring head. In the original San Dimas flume (fig. 15), head was measured 3 feet downstream in the throat section; in the modified version (fig. 16), head is measured at the mid-length of the throat section.

Head-discharge relations

The head-discharge relations for flumes of three different sizes are also shown in figure 16. Because the location of the head-measurement site varies with the length of the throat section, the discharge rating will vary with both width and length of the flume. Recorded head was found to be more accurate when a slot intake, rather than a circular intake, was used for the head-measurement stilling well.

Trapezoidal Supercritical-Flow Flume

General design

Supercritical-flow flumes with vertical side walls, such as the San Dimas flumes, have head-discharge relations that are insensitive at low

flows. As with Parshall flumes, the rectangular flow section limits the measurable range of discharges available for any given size. By sloping the side walls so that the floor width is narrower than the top width at all cross sections, the sensitivity of the rating as well as the range of discharge that may be accommodated by the flume can be increased.

The most promising design for a trapezoidal supercritical-flow flume was developed by A. R. Chamberlin (1957) and A. R. Robinson (1959). They designed and tested a flume with a throat width of 1 foot at the floor, a depth of 4 feet, a throat slope of 5 percent, and a measurable range of discharge from 1 to 260 ft^3/s. This flume is a type IV as previously discussed.

To further test this design and to broaden its applicability, the authors have constructed and field-rated flumes with bottom throat widths of 1, 3, and 8 feet. The configuration and dimensions of the three flumes are shown in figure 17. The side walls have a slope of 30° with the horizontal. The approach reach of each of the flumes has a level floor. For each of the three flumes, the converging reach and throat have floors on a 5 percent slope, ensuring the establishment of supercritical flow in the throat.

Were it not for the severe width constriction at the downstream end of the converging reach, critical flow would occur at the break in floor slope at the downstream end of the approach reach; flow would be supercritical at all cross sections downstream from the approach reach. For all but extremely low flows, however, the sharp constriction in width resulting from the use of a convergence angle of 21.8° (fig. 17) causes backwater that extends upstream into the approach reach. As a result, critical depth occurs at the most constricted cross section in the converging reach, while the flow is subcritical in the approach and converging reaches and supercritical in the throat reach. This is seen in figure 18, which is a photograph of a 3-foot trapezoidal flume in Owl Creek, Wyoming. The purpose of the converging reach is to obtain an increased velocity at the critical-depth cross section and thereby reduce the likelihood of debris deposition at that cross section; such deposition could affect the head-discharge relation in the throat of the flume.

Before a discussion of the details of the three flumes that were field-rated by the authors, it is appropriate to list some generalities concerning the trapezoidal supercritical-flow flume:

1. The flume should be carefully alined in the natural channel and should not constrict it by more than 40 percent, preferably less.
2. Smooth and gradually converging side wing walls should be used to provide a smooth transition from the natural channel to the head of the flume.
3. The flume length should be no more than two or three times the maximum expected head (vertical depth) at the head-measurement cross section. An excessive flume length may produce a series of waves traveling the length of the flume.
4. Side walls should have a slope of at least 30° with the horizontal; flatter side walls will induce wave disturbances.
5. To ensure supercritical flow, the floor of the converging and throat reaches should have a slope between 3 and 5 percent in the downstream direction.
6. Supercritical-flow flumes should be designed and fitted to the natural channel to operate partially submerged during higher flows to avoid excessive scour downstream and excessive backwater upstream.
7. The factor controlling the height of the side walls is the value of critical depth for the throat cross section that corresponds to the maximum discharge for which the flume is designed. That depth occurs at the head of the throat reach. Consequently, the vertical height of the side walls should equal that critical depth plus 0.3 foot of freeboard to accommodate surge and wave action.
8. Head should be measured at the midlength cross section of the throat reach.
9. All flumes must be of strong construction, preferably of reinforced concrete. If the flume is not built on bedrock, considerable scour protection must be provided immediately downstream from the structure.
10. Unless extensive scour protection measures are employed, supercritical flow flumes should not be used in sand channels; these flumes are intended for use in measuring rock- and debris-laden flow, typical of steeper mountain streams.

DIMENSIONS OF TRAPEZOIDAL SUPERCRITICAL -FLOW FLUME									
Flume Size, W_T	Width at Entrance to Converging Reach, W_C (ft)	LENGTHS			Flume Height, D (ft)*	CAPACITIES		FLOOR SLOPES	
		Approach Reach, L_A (ft)	Converging Reach, L_C (ft)	Throat Reach, L_T (ft)		Min ft^3/s	Max* ft^3/s	Approach Section percent	Converging & Throat Section percent
1	5 0	5.0	5.0	5 0	4.0	0 7	350	5**	5
3	9.0	Omitted	7 5	6.5***	5 0	1.0	700	0	5
8	Channel	Omitted	Variable	12.0	4 5	3.0	900	0	5

*Maximum discharges correspond to stages approximately 0.5 foot less than D, see text.
**Optional, may be level, see text
***Throat length tested may have been too short; throat length (L_T) of 10 feet is recommended

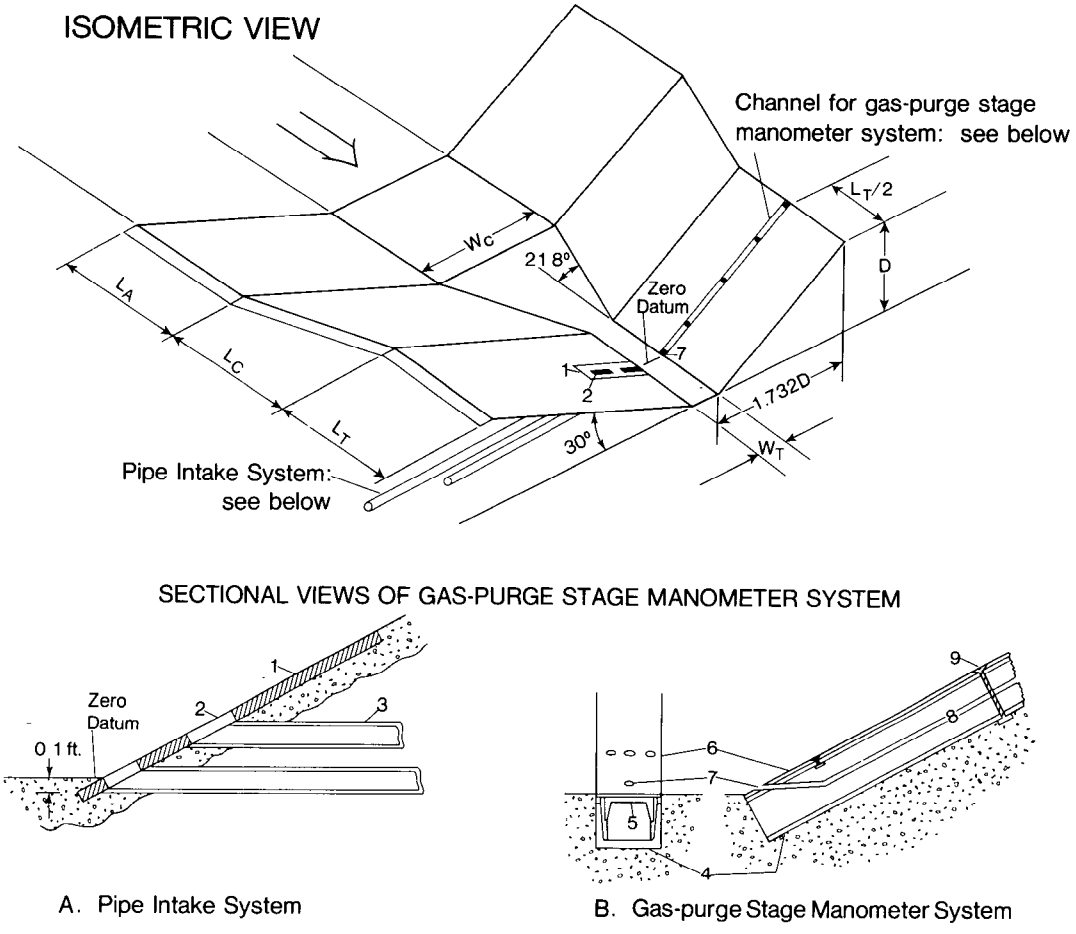

A. Pipe Intake System

B. Gas-purge Stage Manometer System

1. Steel plate, ½ inch thick
2. Intake slot, ½ inch wide, smooth-finish
3. Intake pipes, 2½- to 3-inch diameter
4. Steel channel iron set in concrete
5. Steel channel stiffener
6. Steel cover plate with ¼-inch-diameter orifice tube (7)
8. Conventional gas line plastic tubing
9 Bolts set to permit removing plate

FIGURE 17.—Configuration, design, and capacities of trapezoidal supercritical-flow flumes.

FIGURE 18.—Flow through a 3-foot trapezoidal supercritical-flow flume showing transition from subcritical to supercritical flow.

Head-discharge relations

Preliminary or interim discharge ratings for trapezoidal supercritical-flow flumes can be computed by use of the Bernoulli (total-energy) equation for the length of throat reach upstream from the head-measurement site (fig. 19). Equating total energy at the critical-depth cross section (c) at the head of the throat reach to total energy at the stage-measurement cross section (m), results in

$$\frac{V_c^2}{2g} + d_c + Y_c = \frac{V_m^2}{2g} + d_m + Y_m + h_e, \qquad (8)$$

where V is mean velocity,

g is acceleration of gravity,

d is vertical depth, and

Y is elevation of flume floor above any arbitrary datum plane, and h_e is the friction loss between the two sections.

The assumption can be made that the friction loss, he, in the short reach is negligible and may be ignored. Substituting, in equation 8, values from the two equations $Q=A_c\ V_c=A_m\ V_m$ and $\Delta Y=Y_c - Y_m$ results in

$$\frac{Q^2}{2gA_c^2} + d_c + \Delta Y = \frac{Q^2}{2gA_m^2} + d_m, \qquad (9)$$

where A_c and A_m in the continuity equation are the cross-sectional areas at the critical-depth and head-measuring sections respectively.

From the properties of critical flow (Chow, 1959, p. 64), the critical-section factor (Z) is computed by the formula

$$Z=A_c\sqrt{\frac{A_c}{T_c}}, \qquad (10)$$

where T_c is the top width at the critical-depth cross section.

The discharge (Q) is

$$Q=Z\sqrt{g}\ . \qquad (11)$$

With the assumption of a depth (d_c) at the critical-depth cross section, Q and A_c can be computed and thus the values of all terms on the left side of equation 9 will be known for any chosen value of d_c. Because d_m is uniquely related to A_m, equation 9 can be solved by trial and error to obtain the depth at the measurement cross section corresponding to the value of Q that was computed earlier.

The entire procedure is repeated for other selected values of d_c to provide a discharge-rating curve for the entire range of discharge that can be contained by the side walls of the flume.

The computed discharge rating should be used only until the rating can be checked by current-meter discharge measurements. The sources of error in the computed rating are uncertainty as to the exact location of the critical-depth cross section for any given discharge and neglect of the small friction loss (h_e). However, the general shape of the discharge-rating curve will have been defined by the computed values and relatively few discharge measurements should be required for shifting or modifying the rating.

When the energy equation for the upstream part of the throat reach has been computed as described above, the height of the walls needed to contain the maximum discharge anticipated is known.

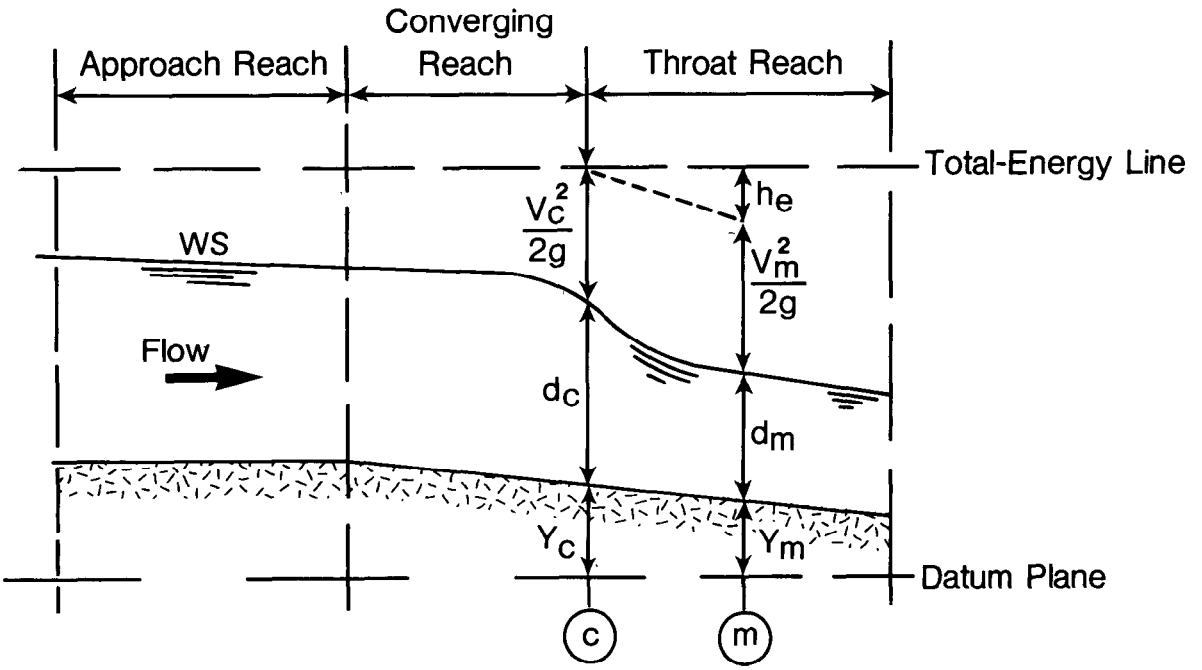

FIGURE 19.—Sketch illustrating use of the total-energy (Bernoulli) equation.

The following should be mentioned, parenthetically, at this point: The total-energy equation may be used in computations for the converging reach to show that the degree of convergence in that reach is sufficiently severe to prevent critical depth from occurring at the entrance to the converging reach at all times other than for periods of extremely low discharge.

One-foot trapezoidal flume

The 1-foot trapezoidal supercritical-flow flume (fig. 17) has been extensively tested in the laboratory and in the field by the U.S. Forest Service. Most of the field installations were in the Beaver Creek watershed, Arizona, where streamflow is characteristically flashy and heavily laden with debris. The Forest Service's precalibrated discharge rating for the flume of 1-foot throat width is shown by the solid line in figure 20. The rating below a discharge of 50 ft^3/s is based on field measurements (in-place calibrations) of discharge and on laboratory model data.

In Virginia, the U.S. Geological Survey has installed a 1-foot flume on a stream that carries only fine sediment. The discharge measurements made at the site have also been plotted in figure 20; they show close agreement with the Forest Service rating. As a matter of interest, the paired values of head and discharge, corresponding to five selected values of critical depth at the entrance to the throat, have been computed (using equations 8 through 11). These are plotted in figure 20 and, as can be seen, closely agree with the Forest Service's discharge rating. The rating has been extended above a discharge of 50 ft^3/s on the basis of the computed values.

Volumetric measurements as low as 0.1 ft^3/s indicate the rating to be reliable at low discharges. The maximum discharge that can be contained between flume walls has been computed to be 263 ft^3/s, on the assumption of critical depth at the head of the throat reach equal to the 4.0-foot height of the side walls. It is recommended that an additional freeboard height of 0.3 foot be provided in future construction to ensure that flows of that magnitude will be contained. It is expected that the head-discharge relation will not be affected by submergence, as long as submergences do not exceed 80 percent. Percentage of submergence is defined as the ratio, expressed as a percentage, of stage in the natural channel immediately

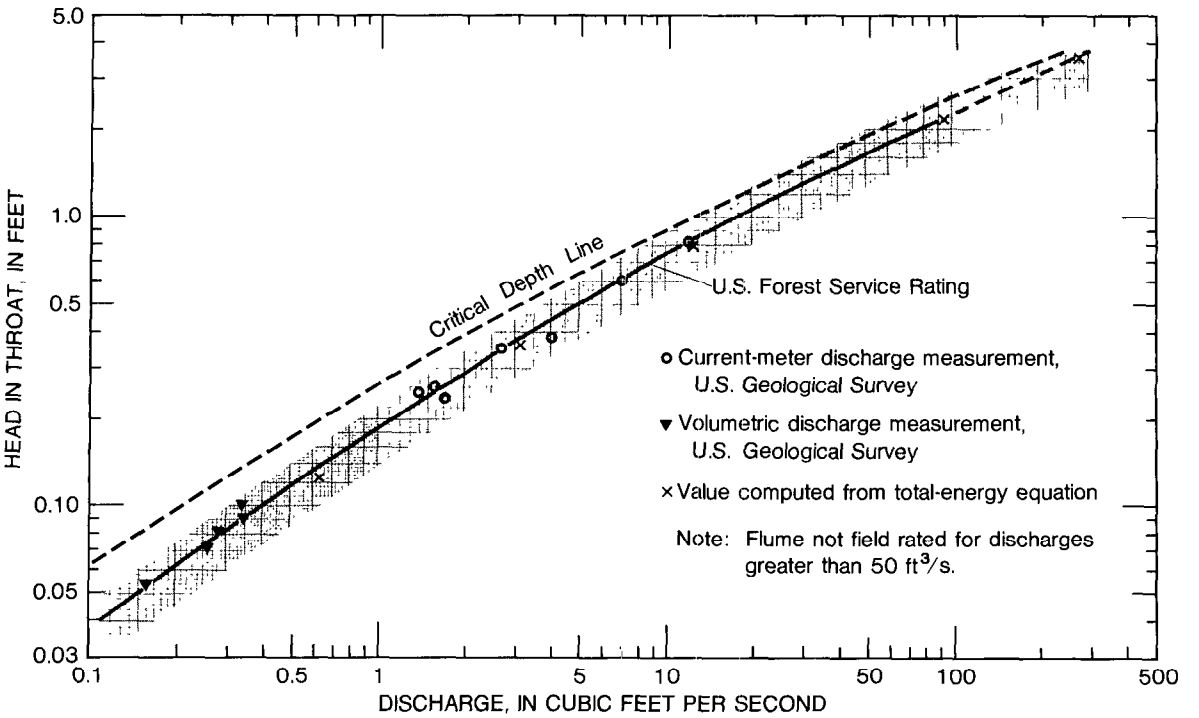

FIGURE 20.—Discharge-rating curve for 1-foot trapezoidal supercritical-flow flume.

downstream from the throat reach to the head at the measurement section, both being referenced to zero datum of the floor of the flume.

The original design of the 1-foot flume specified a 5 percent bed slope for the entire structure, including the approach reach, and extremely low discharges passed through the entire structure at supercritical depth. It is recommended that the bed of the approach reach be placed at zero slope to induce the deposition of large debris upstream from the more vital converging and throat reaches, whose bed slopes will remain supercritical. This change in the approach reach, however, may not alter the situation wherein extremely low discharges pass through the converging reach at supercritical depths.

Three-foot trapezoidal flume

The 3-foot trapezoidal supercritical-flow flume (fig. 17) was designed to extend the range of the 1-foot trapezoidal flume. The 3-foot flume has about the same configuration as the smaller flume, with the horizontal dimensions generally increased threefold. However, because of practical limitations, there were notable departures in scale in the single prototype that was built. The throat reach was made 6.5 feet long instead of 15 feet as called for by a threefold increase in scale. The dimensions of the approach reach have been demonstrated to have no significant effect on the head-discharge relation; therefore, in the interest of expediency, the approximate configuration of the converging reach of the prototype structure was extended upstream, by the use of rock fill, to meet the natural channel banks. A level concrete floor was placed in this modified approach reach for use as a site for current-meter measurements of discharge.

The head-discharge relation for the 3-foot flume is shown in figure 21. The dashed line represents a theoretical rating curve that was developed from the discharge rating for the 1-foot flume by using the Froude number criterion. The plotted points, shown by the symbol x, represent paired values of head and discharge that correspond to five selected values of critical depth at the entrance of the throat; these values were computed in accordance with the method described previously using equations 8 through 11. The computed values closely agree with the theoretical rating curve.

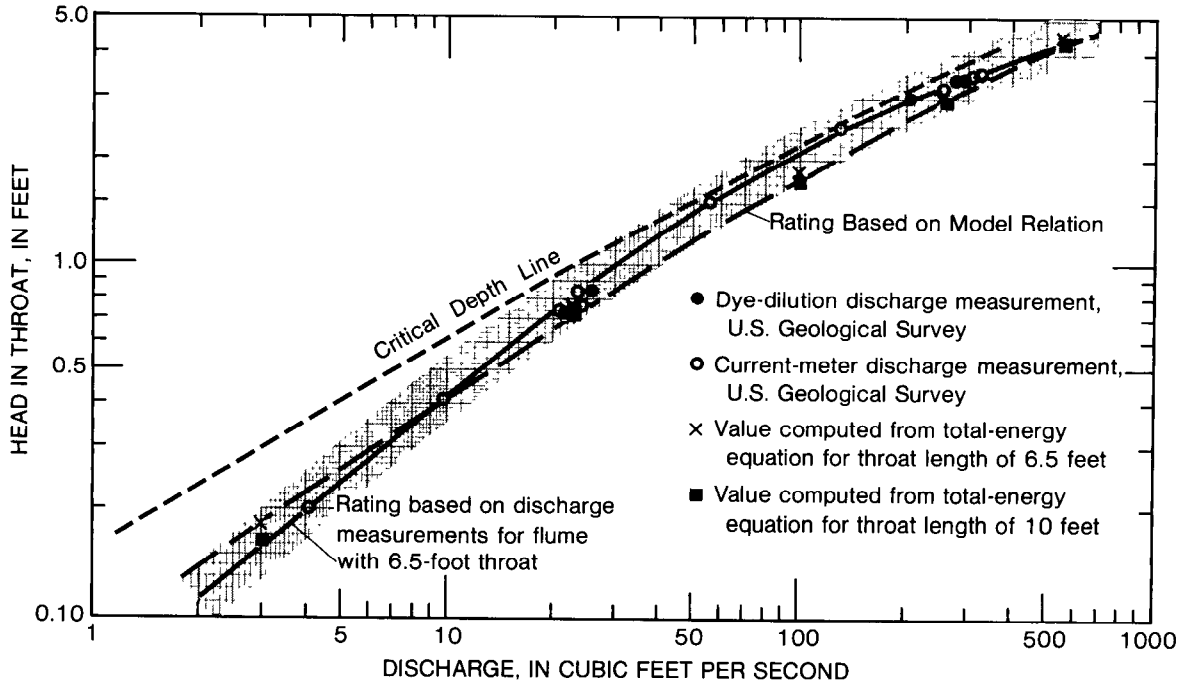

FIGURE 21.—Discharge-rating curve for 3-foot trapezoidal supercritical-flow flume.

The solid line in figure 21 is the actual discharge-rating curve for the structure, as defined by discharge measurements. Poor agreement exists between the theoretical and actual rating curves, but it is difficult to assign a reason for the discrepancy. The modification of the approach section may be discounted. The fact that the throat reach is 6.5 feet long, as compared with the 15-foot reach called for by the threefold scaling of the dimensions of the 1-foot flume, is no explanation because the theoretical computations of discharge were based on a throat reach of 6.5 feet. The most likely explanation for the discrepancy between theoretical and actual ratings is that the short throat length places the head-measurement site too close (3.25 feet) to the critical-depth cross section. Thus, measured depths are approaching those for critical depths. This is borne out by the fact that the recorded heads, for all but very low flows, are higher than would be expected from theoretical considerations. It is recommended that for the 3-foot flume, a throat reach 10 feet long be used in subsequent installations. This would place the head-measurement site 5 feet downstream from the entrance of the throat; it would also lower all ratings somewhat in figure 21.

Theoretical and observed discharge ratings for a throat length of 6.5 feet appear to agree at a discharge of 560 ft^3/s. That value is the maximum discharge that can be contained between flume walls, based on the assumption of critical depth at the entrance of the throat equal to the 5.0 feet height of the side walls. It is recommended that an additional freeboard height of 0.3 foot be provided in future construction to ensure that flows of that magnitude will be contained. The discharge rating for a 3-foot flume is reliable for discharges as low as 1 ft^3/s.

Eight-foot trapezoidal flume

To further extend the discharge range, and hence the applicability of the trapezoidal supercritical-flow flume, a flume with a throat 8-feet wide was built and field tested by the authors. The dimensions of the flume are given in figure 17; the head-discharge relation as defined by discharge measurements, is shown in figure 22. Also shown in figure 22 are the paired values of head and discharge that correspond to five selected values of critical depth at the entrance to the throat reach. The plotted values, computed using equations 8 through 11, show

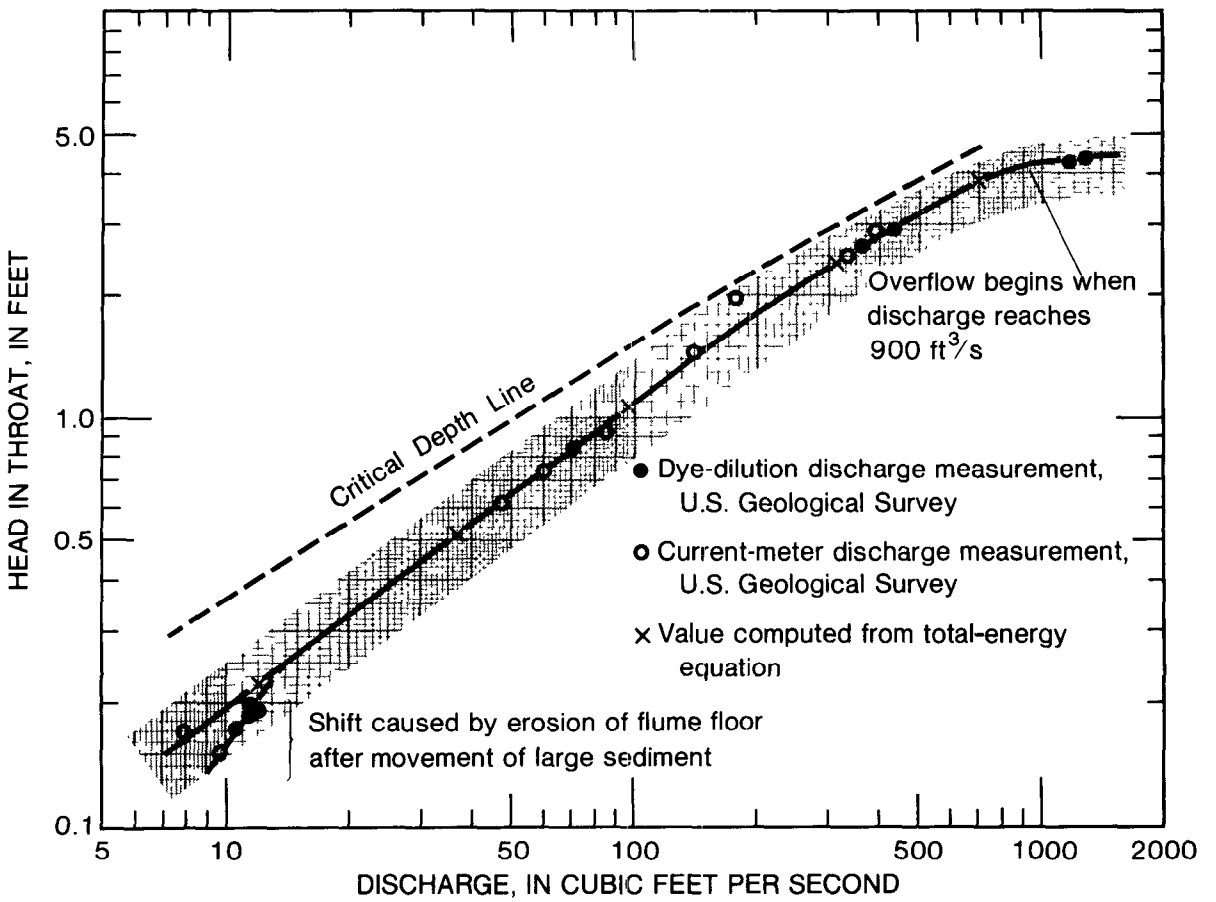

FIGURE 22.—Discharge-rating curve for 8-foot trapezoidal supercritical-flow flume.

close agreement with the measured rating curve.

The discharge measurements indicate that the rating is reliable for discharges as low as 3 ft^3/s. The maximum discharge that can be contained between the flume walls is 900 ft^3/s, when critical depth at the head of the throat reach equals the 4.5-foot height of the side walls. It is recommended that an additional freeboard height of 0.3 feet be provided in future installations to ensure that flows of that magnitude will be contained.

The low-flow discharge measurements plotted in figure 15 show that the low-water end of the discharge rating shifted during a flood flow that transported a heavy load of rock and sediment through the flume. Some of the rocks were as large as 1 foot in diameter. The resulting erosion, particularly of the concrete floor of the flume, caused a small increase in cross-sectional area that had significant effect at low flows. The erosion, which can be seen on the exposed side wall in figure 23, has shown little increase since that flood flow, which occurred during the first year of operation.

Flume Selection and Placement

Selection

After it has been decided that use of a flume is desirable for a particular site, a decision must be made as to whether to use a critical-flow flume or a supercritical-flow flume. Both types of flume will transport debris of considerable size without deposition in the structure; however, if the transported rocks are excessively large,

FIGURE 23.—Erosion of concrete on floor and walls of the throat of a trapezoidal flume.

they may be deposited at, or immediately upstream from, the critical-depth section of either critical or supercritical-flow flumes. For a critical-flow flume, there will be a change in the discharge rating since head is measured *upstream* of the critical-depth section. Therefore, where the situation is likely to occur, a supercritical-flow flume should be selected for use since head is measured *downstream* of the critical-depth section. Because of the greater sensitiveness of the trapezoidal supercritical-flow flume, it is considered preferable to either the San Dimas or modified San Dimas flumes, which are also supercritical-flow flumes.

If a critical-flow flume will pass the transported sediment load, that type of flume should be selected for use because the discharge rating for a critical-flow flume is more sensitive than that for a supercritical-flow flume. Of the critical-flow flumes, the HS, H, and HL flumes have the smallest capacities but are highly sensitive; they are used almost exclusively for research studies in small experimental watersheds. The Parshall flume is invariably selected for all other situations where the use of a critical-flow flume is indicated. Discharge ratings for the Parshall flumes meet the U.S. Geological Survey criterion for sensitiveness in that a change in head of 0.01 foot results in a change in discharge no greater than 5 percent. That criterion is barely met at extremely low flows; at higher flows the Parshall flume ratings are highly sensitive.

Placement

If the decision is to use a flume, the next step is to select the appropriate one for the flow conditions and to design its placement in the channel to obtain optimum results. One of the standard designs previously discussed will ordinarily be used, although channel conditions may make it necessary to make minor modifications in the standard dimensions of the design selected. Parshall flumes of so many different standard sizes have been built and tested that there is sure to be one available whose range of discharge is optimum for the study site. Although trapezoidal supercritical-flow flumes of only three different throat widths have been built and tested, wide latitude exists with regard to the height of the side walls that can be used, and hence the range of discharge that can be accommodated.

After the type and size flume are chosen for the flow conditions expected, the structure must be fitted for optimum compatibility with the natural channel. One of the most common failings is the incorrect placement of the flume; if too high, excessive scour may occur downstream; if too low, excessive submergence may occur at higher flows, partly negating the worth of installing a flume. If the flume is too small, excessive backwater may result with frequent overtopping and even scour around the sides of the flume. It is probably better to err toward the larger size rather than the smaller. All flumes are a compromise between sensitivity and accuracy over the entire flow range. Attempts to obtain good low-flow records by use of a smaller flume should be tempered if the results of high flows, through the same flume, may result in excessive backwater.

The four factors—channel characteristics, range of discharge to be gaged, sensitiveness desired, and maximum allowable backwater—must be considered simultaneously in the precise fitting and placement of flumes. Two preliminary steps are necessary:

1. At the site of the proposed control, determine an approximate stage-discharge relation for

the anticipated range in stage in the unobstructed natural channel. This may be done by the use of an open-channel discharge equation, such as the Manning equation (see equation 12), in which uniform flow is assumed for the site and a value of the roughness coefficient is estimated. An initial field survey, including several cross sections and longitudinal profiles for thalweg, existing water surface, and bankfull stage, will aid in selecting and fitting the flume. This survey will provide data for the Manning equation as well as a means of assessing the amount of backwater that can be tolerated. The reliability of this approximate stage-discharge relation will be improved if one or more discharge measurements are made to verify the value of the roughness coefficient used in the computations. The purpose of the computations is to determine the tailwater elevation applicable to any given discharge after the flume is installed.

2. The head-discharge relations for the several flumes under consideration are next prepared for the anticipated range of discharge. A flume is then selected that best meets the requirements of the site, acting as a control for as much of the range as possible and not exceeding the maximum allowable backwater at the higher stages, with minor submergence effect and acceptable sensitiveness at lower stages. In other words, a high crest elevation minimizes submergence but maximizes backwater effect that may cause or aggravate flooding; a low crest elevation maximizes the submergence but minimizes backwater effect. Where flumes are concerned, the attainment of high sensitiveness at extremely low stages requires a sacrifice in the range of discharge that can be accommodated. The engineer must use judgment in selecting a control design that is optimum for the local condition.

A note of caution that bears repeating is that standard artificial controls seldom operate satisfactorily in sand channels with highly mobile beds.

On the pages that follow, sample problems are given to illustrate the selection and placement of a Parshall flume and a trapezoidal supercritical-flow flume.

Sample problem—critical-flow (Parshall flume)

Problem.—Given a channel whose sediment-transport characteristics indicate the desirability of installing a critical-flow flume (Parshall flume). The range of discharge to be gaged is 4 to 130 ft^3/s. Freeboard (top of streambank to water surface at maximum discharge) desired is 0.8 to 1.0 foot.

The channel cross section is roughly trapezoidal; top width is 12 feet and bottom width is 9 feet. A low-water channel is incised in the streambed; the height from thalweg to top of streambank is 4.3 feet.

Solution.—The first step is to derive an approximate stage-discharge rating for the channel unobstructed by a flume. The rating curve in this example is based on two low-flow discharge measurements and a few values of medium and high discharge computed by means of the Manning equation. The Manning equation is

$$Q = \frac{1.49}{n} A R^{2/3} S_o^{1/2}, \qquad (12)$$

where Q is discharge,
n is roughness coefficient,
A is cross-sectional area,
R is hydraulic radius, and
S_o is slope.

For use in the above equation, the properties of an average cross section are determined for each selected stage; slope is assumed to be that of the streambed, and a roughness coefficient is selected after field inspection of the site. The derived stage-discharge rating applies to a point just downstream of the proposed flume. This tailwater rating curve is to be compared with the flume rating curve for determining the optimum elevation of the flume floor. The tailwater rating curve, which is only approximate, is shown in figure 24, and in actuality would be plotted on a separate overlay sheet of graph paper. The datum used for stage on the overlay is the thalweg of the streambed (lowest point in the cross section). The top of the streambank is also indicated on the overlay. Next, table 3 is examined to select a Parshall flume of the most economical size to accommodate the given range of discharge. An 8-foot Parshall flume is selected. The free-flow discharge rating curve

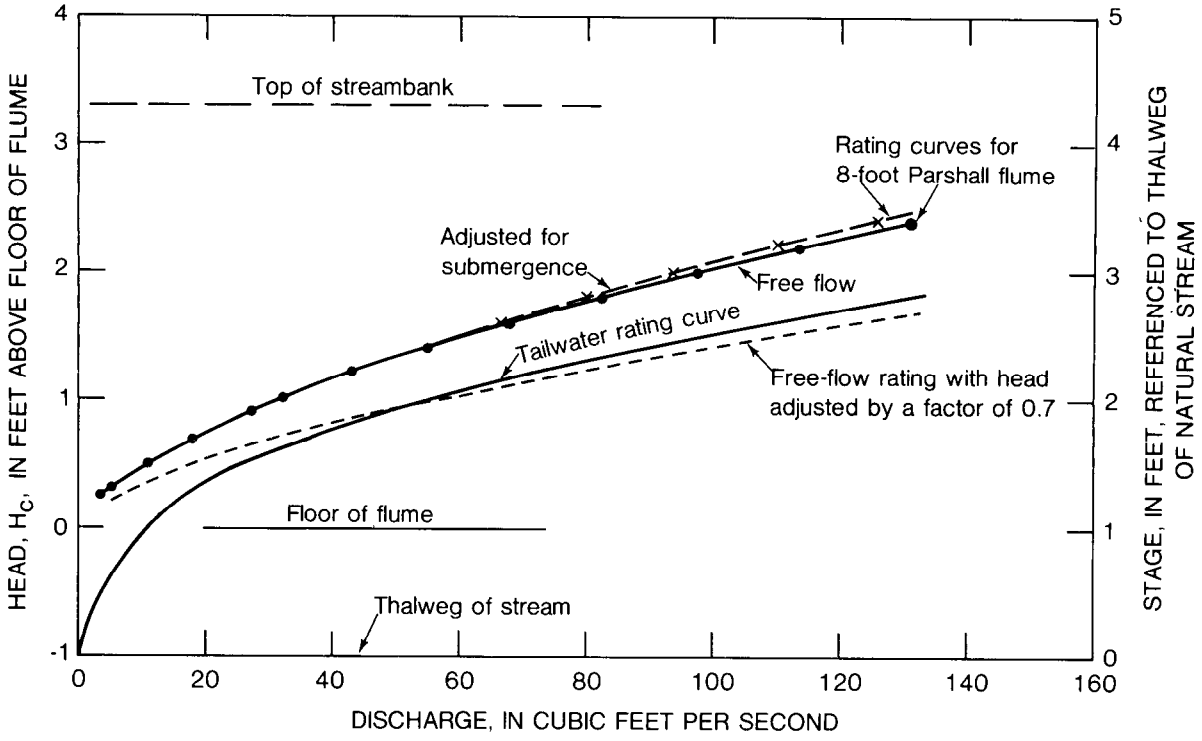

FIGURE 24.—Method of selection and placement of a Parshall flume control.

for an 8-foot Parshall flume is then plotted (fig. 24) using the same coordinate scales as for the tailwater curve, except that datum for the flume floor is selected for free flow at the lowest flows. For higher flows, submergence is permitted, in fact, desirable. At the same time, if feasible, submergence greater than the threshold value of 70 percent for an 8-foot flume should be avoided. Hence, the free-flow rating curve is also plotted in figure 24, this time using 0.7 times the head for the abscissa.

The overlay bearing the tailwater rating curve is then superposed on the graph sheet bearing the free-flow rating curve for the Parshall flume. The sheets are positioned so that the two discharge scales coincide and the overlay is then moved up or down to determine the optimum elevation of the flume floor with respect to the thalweg datum. The best relative position of the two graphs is one which causes the entire tailwater rating curve to lie below the short-dashed curve representing free flow, with head adjusted by a factor of 0.7. The elevation for the flume floor indicated by that positioning would ensure, within the accuracy of the computed tailwater rating, no submergence effect on the Parshall flume rating at any stage (that is, submergence of less than 70 percent).

In this example, if the tailwater rating curve were moved downward from its position shown in figure 24, so as to coincide with the short-dashed curve, at a discharge of 130 ft^3/s, there would be no submergence effect at any stage, but the freeboard would be reduced to a value smaller than the required 0.8 to 1.0 ft. In view of the uncertainty concerning the accuracy of the tailwater rating curve, caution should be exercised in reducing the freeboard requirement because the application of erroneous judgment there may result in a flume installation that causes overbank flooding, when high stages occur during periods of high wind and wave action.

The positioning of the two graphs as shown in figure 24 is believed to indicate the optimum elevation of the flume floor—1.0 foot above the thalweg datum. Submergence effect will occur at discharges greater than 55 ft^3/s, but the submergence effect is very slight, as will be seen, and a margin for error is still present if in actuality the backwater effect is greater than that computed from the approximate tailwater

rating curve. At the minimum discharge of 4 ft³/s, the tailwater stage is 0.5 foot below the floor of the flume, ensuring free flow at that discharge even if aggradation occurs in the downstream channel.

The final step is to adjust the Parshall flume's rating curve for submergence effect at discharges equal to or greater than 55 ft³/s (the point at which the tailwater curve crosses the short-dashed curve, representing free flow, with head adjusted by a factor of 0.7). The adjustment for submergence effect is made by trial-and-error computations using the free-flow rating for the 8-foot Parshall flume, along with figure 10 and equation 7.

The final trial computations are shown in table 6. The adjusted values of discharge obtained are indicated by the symbol x in figure 24; none of those values differs by more than 4 percent from the corresponding free-flow discharge.

Sample problem—supercritical-flow flume

Problem.—Given a steep channel whose sediment-transport characteristics indicate the desirability of installing a supercritical-flow flume. The range of discharge to be gaged is 5 to 400 ft³/s. Freeboard desired in the natural channel upstream from the flume structure is 0.5 to 1.0 feet.

The channel cross section is roughly rectangular—the width is 9 feet and the height of the banks is 7.0 feet. The average slope of the streambed is 6 percent and the Manning roughness coefficient is 0.050.

Solution.—The first step is to compute a stage-discharge rating for the rectangular natural channel by use of the Manning equation (equation 12). Given the data provided above, the discharges corresponding to five selected stages are computed to provide the data points on which a rating curve is based. The results of the computation are tabulated in columns 1 and 2 of table 7 and presented in figure 25 as the tail-water rating.

Next, from the data in figure 17 it is apparent that a 3-foot trapezoidal flume best accommodates the given range of discharge without unduly constricting the channel. The rating curves for the 3-foot flume shown in figure 21 are those for a throat length of 6.5 feet. However, it has been recommended in this chapter (see "Three-foot trapezoidal flume") that a throat length of 10 feet be used in future installations. That change will be made, and, consequently it is necessary that a new rating table be computed for the flume, using a length ($L_T/2$) of 5 feet from the entrance to the throat to the head-measurement section.

Equations 8 through 11 can be used to compute a rating for the 3-foot trapezoidal flume with a 10-foot throat length. As an example of

TABLE 6.—*Submergence computations for 8-foot Parshall flumes*

Q_f (ft³/s)	H_c (ft)	Trial value of Q_s (ft³/s)	H_T (ft)	Submergence ratio	Q_c (ft³/s)	k_s	Computed value of Q_s (ft³/s)
(1)	(2)	(3)	(4)	(5)	(6)	(7)	(8)
55.0	1.4	54.0	0.98	0.70	0.20	5.4	53.9
68.1	1.6	66.4	1.15	.72	.33	5.4	66.3
82.3	1.8	80	1.30	.72	.45	5.4	79.9
97.5	2.0	94	1.47	.735	.62	5.4	94.2
114	2.2	110	1.62	.735	.70	5.4	110
131	2.4	126	1.77	.74	.90	5.4	126

Note.—Columns 1 and 2, from table 3.
Column 3. Estimated discharge with submergence conditions corresponding to head H_c
Column 4. Tail-water elevation corresponding to Q_s in column 3, from figure 24.
Column 5. H_T/H_c ratio.
Column 6. Discharge correction corresponding to H_c (col 2) and submergence ratio (col. 5), from figure 3
Column 7 Correction factor = 5 4 for 8-foot flume, from figure 10.
Column 8. $Q_s = Q_f - k_s Q_c$ should match trial value in column 3.

TABLE 7.—*Discharge rating for natural channel*

Stage (feet)	Discharge (ft^3/s)	Head referred to flume gage datum (feet)
(1)	(2)	(3)
0.0	0	−1.0
1.0	58	0.0
1.5	107	0.5
2.0	164	1.0
3.0	294	2.0
4.0	437	3.0

the mechanics of the method, the computation for a single point on the rating curve follows:

First, select some value of critical depth (d_c) at the entrance to the throat (see fig. 19):

Let d_c $=3.5$ feet

Bottom width (W) $=3$ feet

Top width (T_c) $=W_T+2(1.732)d_c=15.12$ feet

(*Note.*—cot 30° $=1.732$)

Average width ($\overline{W}$) $=(W_T+T_c)/2=9.06$ feet

Area (A_c) $=\overline{W}d_c=31.71$ ft²

Z $=A_c\sqrt{A_c/T_c}=45.88$

Q $=Z\sqrt{g}=260$ ft³/s

V_c $=Q/A_c=8.20$ ft/s

$V_c^2/2g=1.045$ feet

ΔY $=$ flume slope$\times L_T/2=0.05\times5=0.25$ feet

Total energy head$=d_c+V_c^2/2g+\Delta Y=4.80$ feet

Thus for a discharge of 260 ft³/s, the total energy head is 4.80 feet. A depth (d_m) at the head-measurement section whose total energy head is also 4.80 feet can now be computed by trial and error. Only the final trial computation will be shown below:

Assume $d_m=2.94$ feet

Top width (T_m)$=W_T+2(1.732)d_m=13.18$ feet

Average width ($\overline{W}$)$=(W_T+T_m)/2=8.09$ feet

Area (A_m)$=\overline{W}\,d_m=23.79$ ft²

$V_m=Q/A_m=10.93$ ft/s

$V_m^2/2g=1.86$ feet

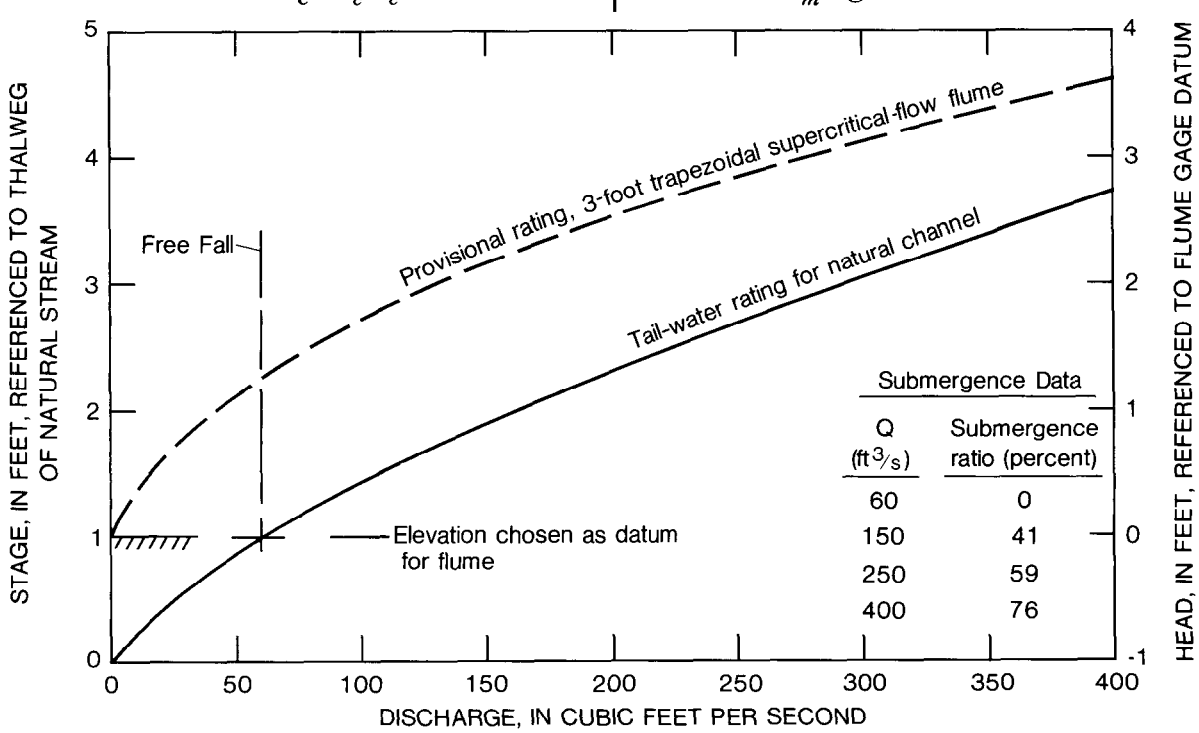

FIGURE 25.—Rating curves used in problem illustrating the selection and placement of trapezoidal supercritical-flow flume.

$$\text{Total energy head} = d_m + V_m^2/2g = 4.80 \text{ feet}$$

The assumed depth (d_m) gives a total energy head that matches that for the critical-depth cross section; therefore, for a discharge of 260 ft³/s the stage is 2.94 feet.

The five computed data points on which the discharge rating for the 3-foot flume is based are given in table 8. As a matter of general interest, the corresponding head values for a throat length of 6.5 feet are also shown in the table for comparison with head values for the throat length of 10 feet. For the same purpose, these five data points are plotted on figure 21, where they are found to plot almost exactly on the model rating curve.

This rating curve is also plotted in figure 25, arbitrarily selecting as a first trial 1.0 feet channel datum as zero datum for the flume. For this trial flume datum the measured head corresponding to the maximum discharge of 400 ft³/s would be about 3.65 feet. The objective is to position the flume in the channel to operate submerged but not to the extent that the threshold of 80 percent is exceeded. The higher the submergence, the less likely flows will forced out of banks upstream because of backwater resulting from the flume and the less likely scour will occur downstream. By use of flume datum for both the flume rating and the tailwater rating, submergences can be computed for selected discharges. As can be seen from figure 25, the flume, positioned at a trial datum 1.0 foot above the zero datum for the natural channel, will operate at 76 percent submergence at a flow of 400 ft³/s. Furthermore, free fall will exist up to approximately 60 ft³/s.

Values of d_c from table 8 were also plotted against discharge on logarithmic graph paper and a curve was fitted to the plotted points. The value of d_c (critical depth at the entrance to the throat reach) corresponding to the maximum discharge of 400 ft³/s is about 4.25 feet. If 0.35 foot is allowed for freeboard at the entrance of the throat reach, the side walls at this section should have a height of 4.6 feet (flume datum = 4.85 feet).

Next, consideration must be given to backwater effect upstream from the flume. Although a side-wall height of only 4.6 feet was required at the head of the throat reach of the flume, a greater height is required for the side walls at the upstream end of the converging reach and in the approach reach.

Upstream from the flume the maximum discharge of 400 ft³/s may occur at a supercritical depth of 3.75 feet or a subcritical depth of 4.80 feet. If supercritical flow exists in the natural channel upstream, a hydraulic jump will occur some distance upstream from the approach because of the constricting effect of the flume, and the 4.80 feet depth will be realized. The channel in the approach may be expected to fill so that this depth will apply to the flume entrance elevation of 0.75 foot gage datum. This assumes that the length of the converging reach is 10 feet; thus the rise from the measuring section in the throat to the entrance of the converging section at 5 percent slope is 0.75 feet. Therefore, the water surface at the upstream entrance is 5.55 feet flume datum. Since the stream banks are at a stage of 7.0 feet (6.0 feet flume datum), a freeboard of 0.45 foot exists.

It is apparent that the elevations chosen for the 3-foot flume in figure 25 are satisfactory, but marginal, considering backwater. Should the natural channel dimensions be such that backwater from the flume would have caused

TABLE 8.—*Discharge ratings for 3-foot trapezoidal flumes*

[Columns 2 and 3 used for discharge rating, depths in columns 1 and 4 shown for general interest]

d_c (feet)	Q (ft³/s)	Head at measuring section, $L_T/2$: Throat length, L_T, = 10 feet (feet)	Head at measuring section, $L_T/2$: Throat length, L_T = 6.5 feet (feet)
(1)	(2)	(3)	(4)
0.3	3.06	0.16	0.18
1.0	23	0.71	0.75
2.2	101	1.75	1.83
3.5	260	2.94	3.04
5.0	560	4.32	4.45

overflow into the flood plains or over and around the flume, a larger flume might have been selected. In any case, the placement of the flume should be such as to operate with a high degree of submergence.

With regard to sensitiveness, at a minimum discharge of 5 ft^3/s, the flume discharge rating meets the criterion of having no more than 5 percent change in discharge for a change of 0.01 foot in head.

Construction of Flumes

General

The portable Parshall flume and the HS, H, and HL flumes may be built of sheet metal or metal plate. The Parshall, San Dimas, modified San Dimas, and the trapezoidal supercritical-flow flumes are usually built of reinforced concrete, but concrete block, steel, wood, and fiberglass have also been used on occasion.

Flume dimensions, especially those of the throat reaches, must be carefully adhered to if precalibrated discharge ratings are to be used. Upon completion of a new flume, the throat dimensions should be carefully measured and discharge ratings adjusted. For the trapezoidal supercritical-flow flume, a new rating should be computed using the actual in-place dimensions, if they differ from the standard sizes. The complicated configuration of the trapezoidal flume approach and converging sections need not be rigidly adhered to as long as reasonable care is exercised to produce a smooth transition from subcritical to supercritical flow. Abrupt entrances may cause flow separation in the throat section and affect the depth at the measuring section.

Flumes must be solidly built in streams with high-velocity flow, laden with heavy sediment and debris. The high velocities exert uplift forces of considerable magnitude on the structures, and also cause scour in, and downstream from, the flumes. Good concrete and concreting techniques must be used if erosion of the flume throat is to be avoided. Two methods have been employed in the construction of the trapezoidal supercritical flow flume: (1) prefabrication for assembly at the site and (2) cast-in-place construction where pre-mixed concrete could be acquired and used at an accessible site.

Prefabricated construction

Prefabrication of the trapezoidal supercritical flow flume using either steel plate or concrete has been successful. When concrete was used, the various components were formed on a flat floor (fig. 26). Plastic sheeting was placed under the forms; upon removal of the forms, the sheeting was raised to form a dam around each component, which was then flooded for 10 days to insure good curing.

Although this method reduced forming in the field and gave good dimensional control and quality concrete, it was necessary to use heavy equipment to transport the components and to place them in position for welding (fig. 27). Other disadvantages in using prefabricated components are the requirements that concrete for footings still must be poured at the site and that the structure be bonded and waterproofed. For the flume shown in figure 27, the various components were welded together in place, steel plates having been suitably positioned at the time of pouring. The completed flume is shown in figures 18 and 28.

The trapezoidal supercritical-flow flume is typically used on small, flashy, inaccessible streams because it is a precalibrated device or because a calibration can be derived readily if the flume is constructed with reasonable adherence to the design principles already enumer-

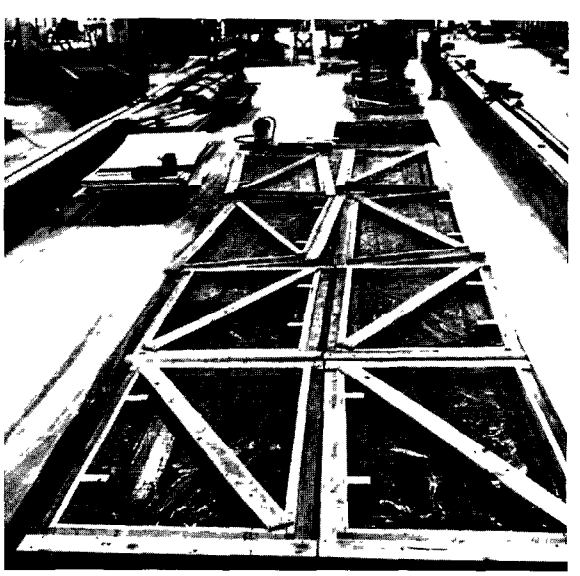

FIGURE 26.—Forming for concreting of components for prefabricating trapezoidal supercritical-flow flume.

FIGURE 27.—Construction of 3-foot trapezoidal supercritical-flow flume using precast concrete components (note steel plates set in concrete to permit welding).

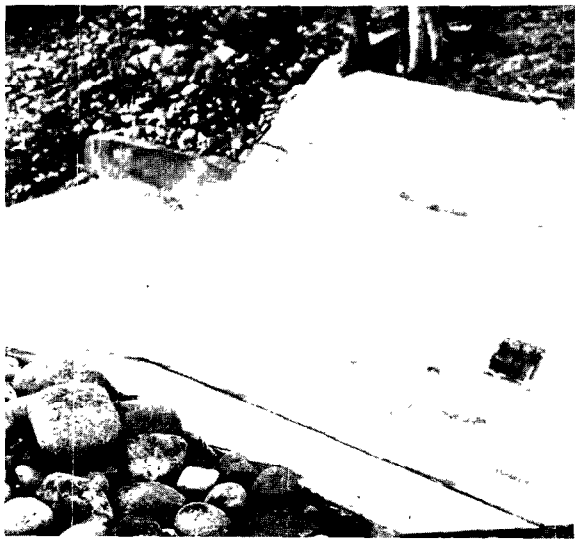

FIGURE 28.—Completed prefabricated trapezoidal supercritical-flow flume.

ated (see "Trapezoidal supercritical-flow flumes"). To improve the utility of this flume, the Colorado District (Bill Curtis, written commun., 1981) has installed several trapezoidal flumes using prefabricated components made from steel plate (fig. 29). The design has been kept very simple and can be fabricated in any good machine shop. Although the use of these prefabricated steel components will simplify construction in remote sites, concrete must still be used in forming a cutoff wall downstream. Furthermore, concrete must be placed under the 10-foot sloping floor section to anchor it and to produce a smooth transition in the converging section to the entrance of the throat section.

It should be noted that in the above design the entrance edge of the throat section will not be in a vertical plane as is the case in the original design of the supercritical-flow flume. This is because the sections making up the throat are rectangular and must be tilted when fastened to the floor section, which is placed on a 5 percent longitudinal slope. The simplification obtained by using rectangular sections should not materially affect the computed discharge rating. Discharge measurements for the 1-foot prefabricated flumes installed in Colorado were found to be in agreement with the rating shown in figure 20 (E. A. Wilson, written commun., 1981).

Cast-in-place construction

Concrete flumes that are cast in place are stronger, and are simpler and more economical to install; the use of cast-in-place concrete is recommended where possible. Figures 30 through 35 illustrate the recommended method used in constructing a trapezoidal supercritical-flow flume whose throat width (W_T) is 1 foot and whose height (D) is 2.5 feet. An energy-dissipation box was built at the site as an integral part of the flume; its construction is advisable where scouring is a potential problem. A step-by-step description of the construction procedures follows:

1. Decide on the alinement and elevation of the flume relative to the existing natural channel; outline corners and other important features with stakes and batter boards.
2. Perform the necessary excavation and then pour the concrete slab or footings to suitable depth.
3. Roughly form and pour vertical support walls for the trapezoidal throat reach; its sides are at an angle of 30° with the horizontal. The top of the concrete should be approximately 0.3 foot lower than the elevation that is intended for the finished concrete of the throat floor and sloping side walls (fig. 31).

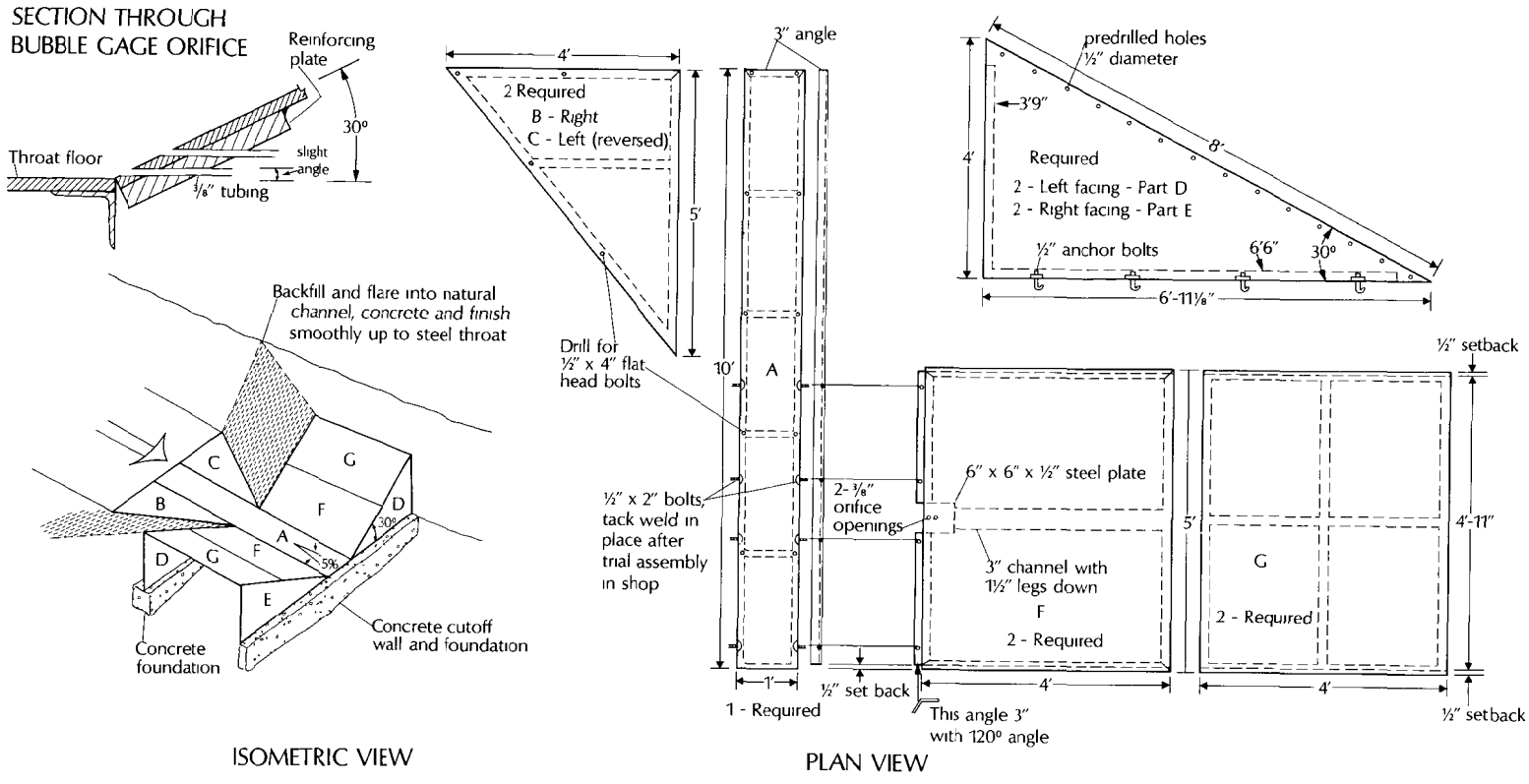

FABRICATION AND INSTALLATION NOTES

1. All angles 1½" x 1½" unless otherwise noted, welded or bolted leg down to undersides of steel plates.
2. Predrill ½" holes on 6" centers on all outside angles.
3. Parts A through E of 11 gage steel or heavier
4. Spot weld or bolt angles to steel plate, for parts A, B, and C, if bolted, extend bolts several inches or if welded place bolts through floor section to anchor in concrete.
5. Preassemble flume in shop and predrill all assemble holes to make certain of fit prior to transport into field, grind and finish all steel edges
6. Provide dual orifices and tubes for bubble gage; orifices must be flush with steel plate with no protrusions
7. Assemble parts in lettered sequence, floor section A, B, and C should be on 5 percent slope and "bedded" firmly into concrete, if possible allow to set up prior to assembling remaining parts.
8. Depth and extent of cut off walls and foundations should be adequate to prevent scour and frost heave

FIGURE 29.—Supercritical-flow flume prefabricated of steel.

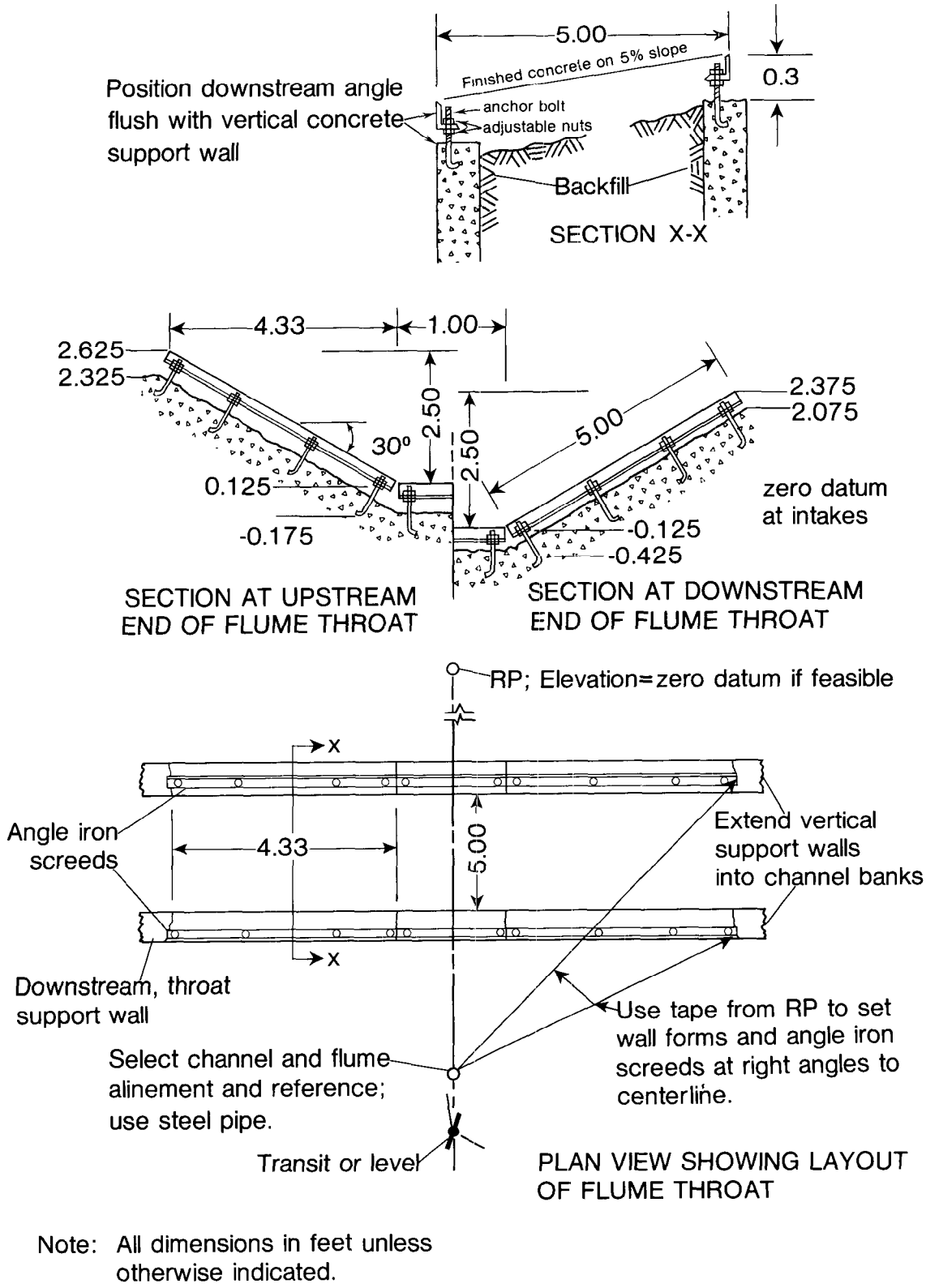

FIGURE 30.—Construction layout features for a 1-foot trapezoidal supercritical-flow flume with a height of 2.5 feet.

FIGURE 31.—Vertical support walls and energy-dissipation box at early stage of construction of 1-foot trapezoidal supercritical-flow flume.

4. Before the concrete hardens, place anchor bolts, previously bolted onto angle-iron screeds, in position in the vertical support walls; use an engineer's level to position the angle iron at the approximate elevation desired for the finished concrete of the throat. Exact elevations are not necessary at this time.
5. Once the concrete is set, using an engineer's level adjust angle-iron screeds to exact elevations, tightening top and bottom nuts on anchor bolts. The angle-iron screeds will remain permanently in place (fig. 32).
6. Install intake pipe or bubble-gage orifice plate; backfill and tamp earth between support walls in the approach reach to approximately 0.4 foot below levels intended for finished concrete surfaces.
7. Form the approach and converging reaches; exact dimensional control is not necessary in these reaches.
8. Pour and finish concrete surfaces as shown in figure 33. A stiff concrete mix should be prepared or ordered if pre-mixed concrete is used. In the case of the latter, if long-haul distances are involved, it may be advisable to haul the concrete mix in the dry state, adding water at the construction site. This also reduces truck weight on secondary or rural roads and on bridges. A smooth trowel finish on all surfaces is desired.
9. Thoroughly cure concrete to avoid later erosion of surfaces when transporting coarse sediment.
10. Mount overhead wire-weight gage or a bar-mounted point gage from horizontal beam positioned across the flume throat at mid-length of the throat and directly above the

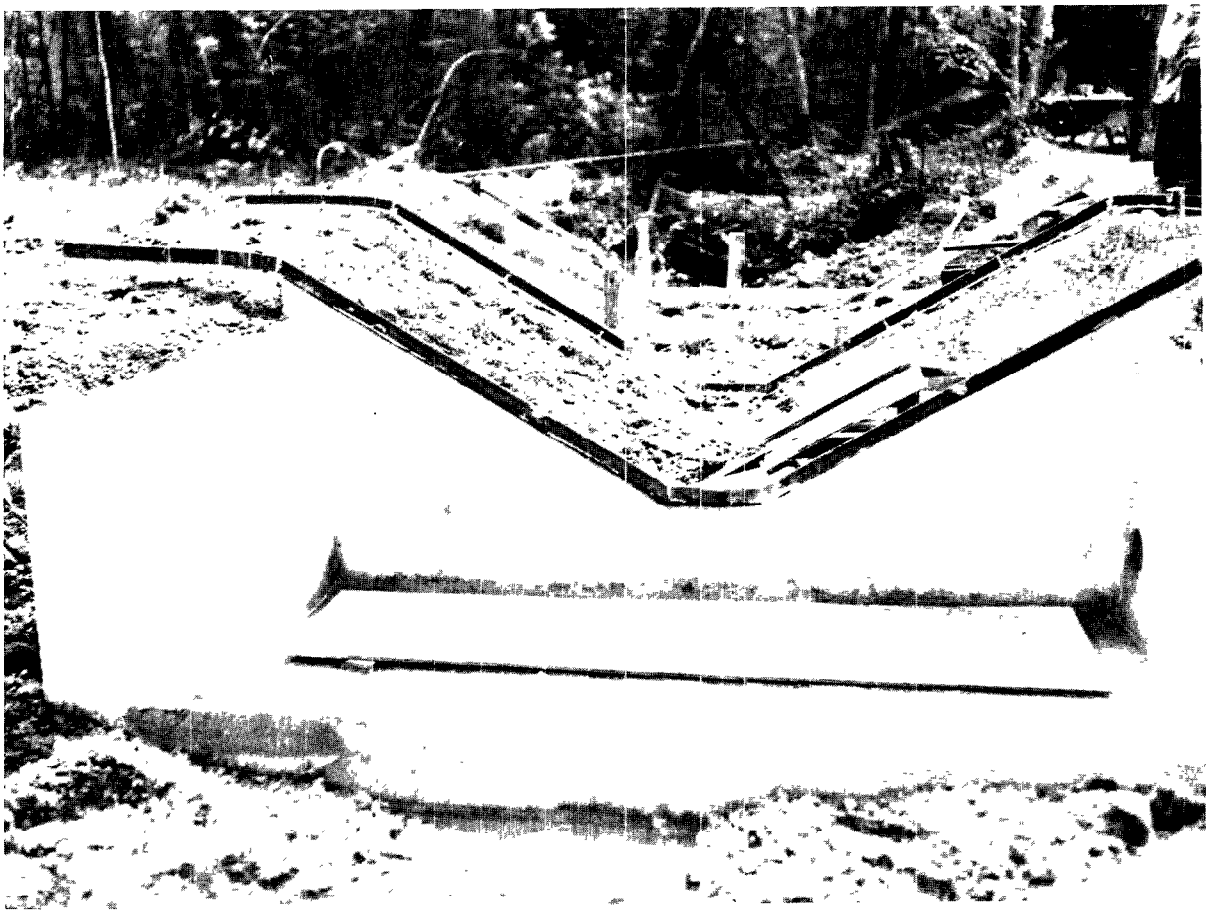

FIGURE 32.—Method of obtaining accurate dimension control by using adjustable steel angles for concreting screeds during construction of 1-foot trapezoidal flume.

bubble orifice or intake pipe. (In figs. 34 and 35, note the anchor bolts set in the abutment for fastening the horizontal beam.)

Operation of Flumes

Measurement of head

The datum (elevation of zero reading) for the head gage is the flume floor at the head-measurement section. Consequently, the head that is recorded or read is actually the vertical depth of water at the measurement site. All (auxiliary) head gages placed downstream, to determine submergence, should be set to the same datum as the head gage. For head readings to be meaningful, it is important that the stream lines of flow are not disturbed in the vicinity of the head-measurement section.

For the critical-flow flumes—Parshall, portable Parshall, HS, H, and HL flumes—head is read in the level converging reach where flow is subcritical. Velocities at the head-measurement section in any of these flumes is sufficiently low so that the thin standard U.S. Geological Survey vertical staff gage of porcelain-enameled metal may be mounted on the flume walls with little danger of unduly disturbing the stream lines of flow. However, for the standard Parshall flume, a 2 × 6-inch plank is usually recessed in the wall to act as a backing for the staff-gage plate. For the portable Parshall flume, which normally is not equipped with a recording head gage, it is customary to mount the vertical gage plate in the stilling well.

For the supercritical-flow flumes—San Dimas, modified San Dimas, and trapezoidal flumes—head is read in the throat reach where flow is supercritical. Velocities there commonly

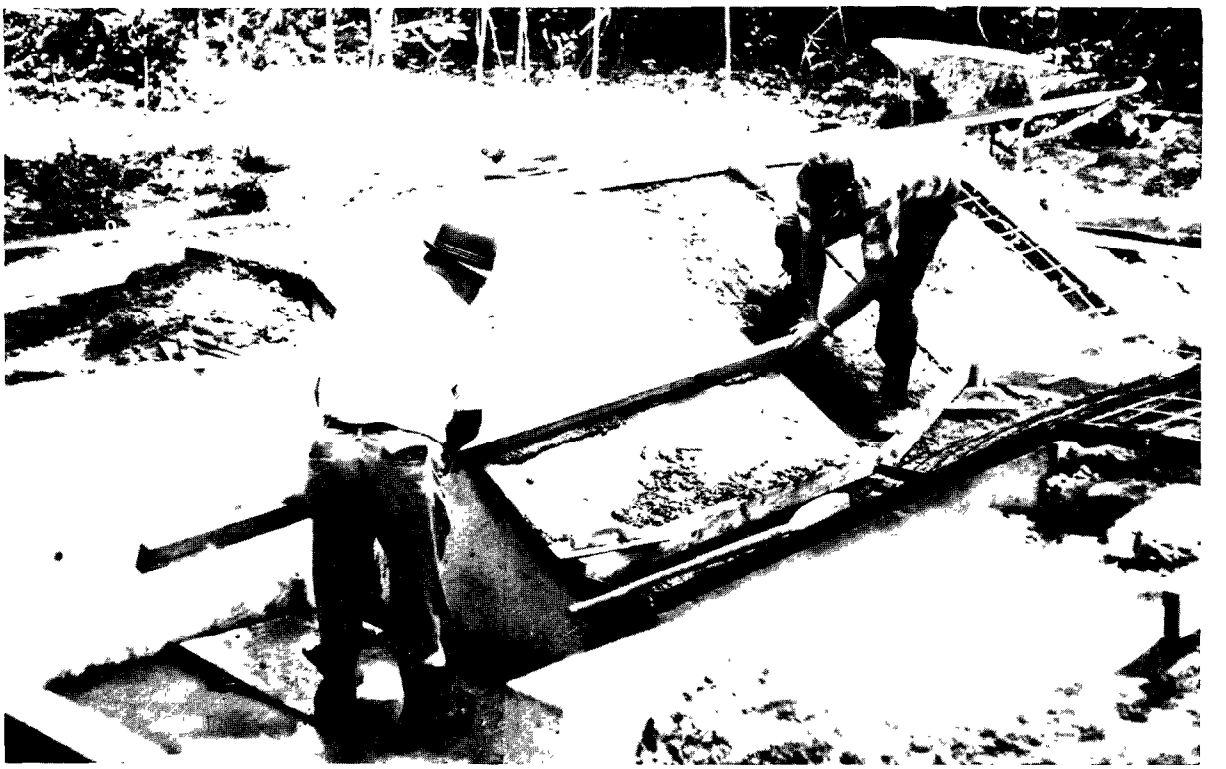

FIGURE 33.—Concreting of throat section of 1-foot trapezoidal supercritical-flow flume using steel angle screeds.

range from 3 to 20 ft/s. Supercritical-flow flumes are installed only on streams that carry heavy rocks or debris, and velocities of that magnitude are required to move the material through the flume without deposition occurring. The combination of high velocity and heavy debris makes it impractical to mount a staff gage on the flume wall; not only will the stream lines of flow be disturbed to the degree that hydrostatic conditions will not exist, but the exposed staff gages will also be subject to damage. In that situation an overhead wire-weight gage or a bar-mounted point gage has been used successfully to measure head.

Float-type gages, using conventional intake pipes and stilling wells, and bubble-type gages, with fixed orifices, have been used successfully to obtain a continuous record of head. Because of the high velocities and sediment loads, the intake pipe or bubble orifice must terminate flush with the streamward surface of the flume side wall to minimize drawdown. This is especially important in supercritical-flow flumes. Drawdown is a nonhydrostatic condition in which the local pressure at the intake or orifice, because of local curvature of the stream lines, is less than the ambient pressure in the stream, thereby causing the gage to under-register the elevation of the water surface.

Where a stilling well is used, some drawdown may be produced even if the intake pipe is flush with the flume wall (usually the smaller the opening in the wall, the less the drawdown). However, head in the stream can be correlated with head in the stilling well, thereby providing a basis for correcting recorded heads to give true head in the flume. On the other hand, a well-designed bubble orifice—for example, that shown in figures 17 and 29—will be virtually free of drawdown and respond immediately to rapidly changing stages.

If flumes are installed in flashy streams where rapid changes in stages are expected, intake lag may be a crucial factor. Where conventional stilling-well intake pipes are used, lag time may be reduced by (1) using large intake pipes (but this may intensify the drawdown problem); (2) placing the stilling well as close to the flume as possible; and (3) making the stilling well no larger than necessary to accommodate

FIGURE 34.—View looking downstream at completed 1-foot trapezoidal supercritical-flow flume, less point-gage support beam.

the recorder float. Sometimes the problem of lag is handled by building the stilling well immediately adjacent to the flume so that the two structures have a common side wall; a hydraulic connection between the stilling well and stream is then provided by means of a vertical slot in the common wall.

The use of a bubble-type gage is recommended for recording stage because it generally responds more quickly to a rapidly changing stage than does a float-type gage; in addition, the bubble gage is less susceptible to the common problems of freezing and minor sediment deposition.

In the supercritical-flow flume, one difficulty in measuring head that cannot be surmounted, regardless of the type of recorder used, is the turbulence of the water surface in the throat reach.

Current-meter measurement of discharge

Although flumes are usually built in accordance with the dimensions of a laboratory-rated or field-rated model flume, the precalibrated discharge rating is usually only a preliminary or interim rating, subject to verification by direct measurement of discharge, typically by current meter.

The required current-meter measurements of discharge are commonly made in the approach reach of the flume because that reach invariably has a more uniform cross section than the natural channel. Although the approach reach in the trapezoidal supercritical-flow flume is unvarying in cross section, most other flumes have

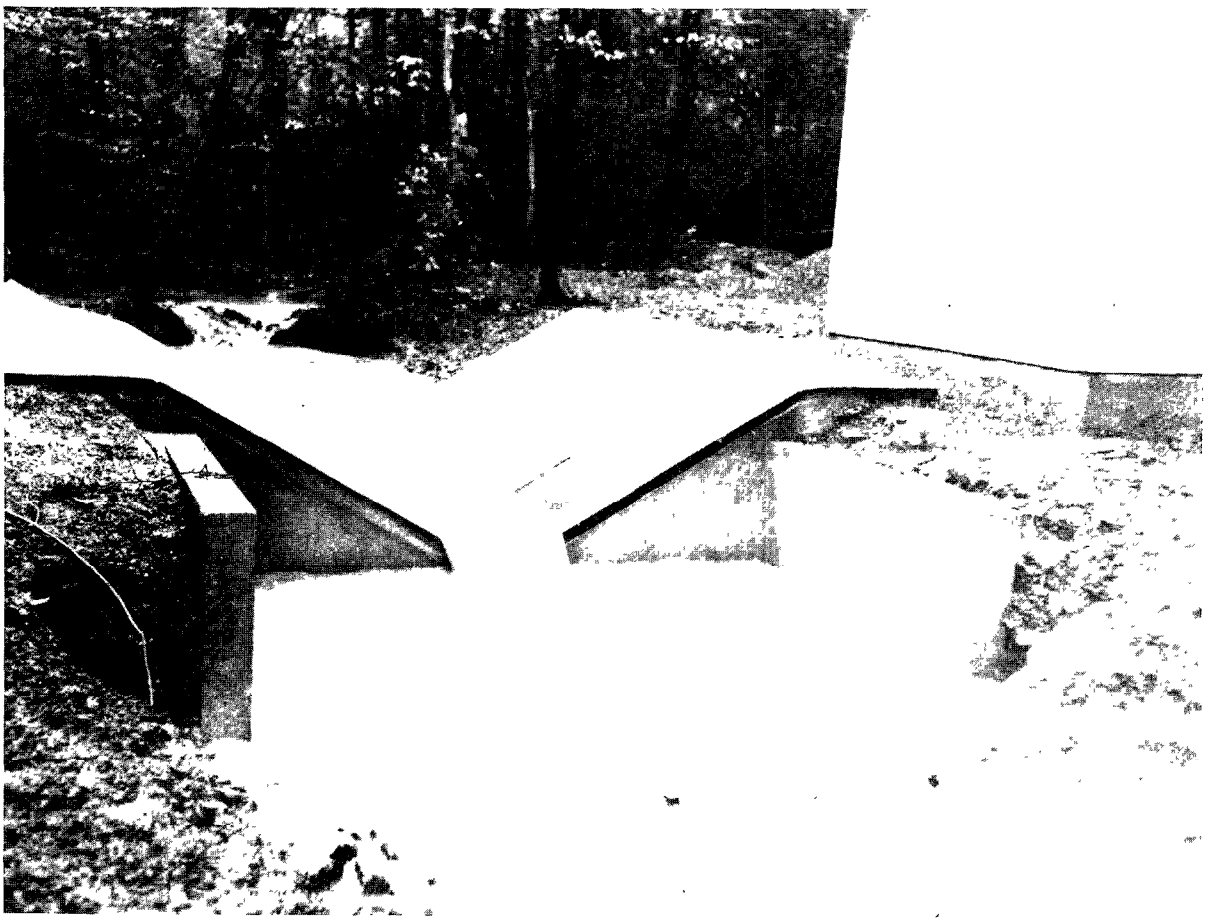

FIGURE 35.—View looking upstream at completed 1-foot trapezoidal supercritical-flow flume. Intake farthest downstream is for sediment sampling.

Although flumes are usually built in accordance with the dimensions of a laboratory-rated or field-rated model flume, the precalibrated discharge rating is usually only a preliminary or interim rating, subject to verification by direct measurement of discharge, typically by current meter.

The required current-meter measurements of discharge are commonly made in the approach reach of the flume because that reach invariably has a more uniform cross section than the natural channel. Although the approach reach in the trapezoidal supercritical-flow flume is unvarying in cross section, most other flumes have a converging approach reach in which the cross-sectional area decreases in the downstream direction.

Several precautions are necessary to ensure the accuracy of current-meter measurements of discharge made in a flume approach reach. These precautions are listed below:

1. The discharge-measurement cross section should be well upstream from a critical-depth section so that the stream lines of flow will be free from curvature in the vertical plane.
2. Similarly, the stream lines of flow should be parallel; if they are not, the horizontal angles at which they cross the measurement cross section must be measured and used in computing the discharge. This means that discharge measurements made in a converging approach reach, such as the approach reach in a Parshall flume, require the measurement of the horizontal angles of the current. The cross section ordinarily used for measuring discharge in a Parshall flume is the one at the head-measurement section.
3. In a narrow flume, and particularly one with high-velocity flow, the discharge measurement should not be made by wading because

of the interference to flow offered by the stream-gager's body. The measurement should be made from a bridge or plank across the top of the flume, using the current meter suspended from a rod. If velocities are high, the conventional method of measuring depth will be inaccurate because of water pileup on the rod. In this case, obtain differences in rod readings at index points on the bridge or plank (1) when the base plate of the rod is positioned at the water surface and (2) when the base plate rests on the floor of the flume.

4. When the floor of the approach reach is uniformly level, as it generally is, depths should be read to hundredths of a foot rather than to the nearest tenth of a foot, as is done in natural channels. If the uniform depths are rounded to the nearest tenth of a foot, a bias will be introduced into the computed discharge.

5. Widths should be measured accurately to the nearest tenth of a foot using a graduated tape rather than a tag line whose smallest graduations are 2-foot markers. The wading rod is normally held at the tag line, which thereby places the rotor of the meter upstream from the tag line. In a cross section through the center of the rotor, positioning may be significantly greater than the widths at the wading rod positioning. The width at the rotor positioning should be used.

6. Vertical-axis current meters do not register velocities accurately when placed close to a vertical wall. A Price meter held close to a right-bank vertical wall will under-register because the slower water velocities near the wall strike the effective (concave) face of the cups. The converse is true at a left-bank vertical wall. Laboratory data suggest that the mean vertical velocity in the vicinity of a smooth side wall of a rectangular channel can be related to the mean vertical velocity at a distance from the wall equal to the depth. The tabulation below gives values that define the relation. It is suggested that current-meter observations be taken no closer than 0.5 foot from a vertical wall. Values of mean velocity at the wall and at intermediate verticals closer than 0.5 foot from the wall can be computed by interpolation in the table below.

Distance from wall, as a ratio of the depth	Mean vertical velocity, as related to V_D (ft/sec)
0.00	$0.65V_D$
.25	$.90V_D$
.50	$.95V_D$
1.00	$1.00V_D$

Note: V_D is the mean vertical velocity at a distance from the vertical wall equal to the depth

7. Flumes installed in streams carrying heavy rocks and debris may have such material deposited in the approach reach where discharge measurements are made. If this material is removed, similar deposition will usually occur on the next stream rise. If the flume is of the supercritical-flow type, deposition of debris in the approach reach will frequently have minor effect on the head-discharge relation; the best course of action is not to remove the rocks but to redistribute them to produce both uniform stream lines of flow in the flume and a uniform cross section for measuring discharge. If the flume is of the critical-depth type, where head is measured upstream in subcritical flow, deposition in the approach section will probably affect the head-discharge relation; in that situation, removal of the debris is recommended. Regardless of the type of flume that has been installed, if an infrequent major flood has deposited so much debris in the upstream approach that the rating characteristics of the flume are greatly altered, it is best to manually remove the debris and restore the original discharge rating of the flume.

Winter operation

Relatively small installations, such as weirs and flumes, have been successfully operated under severe winter conditions by the use of removable roof covers and infrared-heater systems fueled by liquified gas.

The 3-foot trapezoidal supercritical-flow flume that was previously described has yielded ice-free records through the use of such an installation. Limited experience to date indicates that the roof and the heater system should conform to the configuration shown in figure 36. Extension of the roof a short distance over the

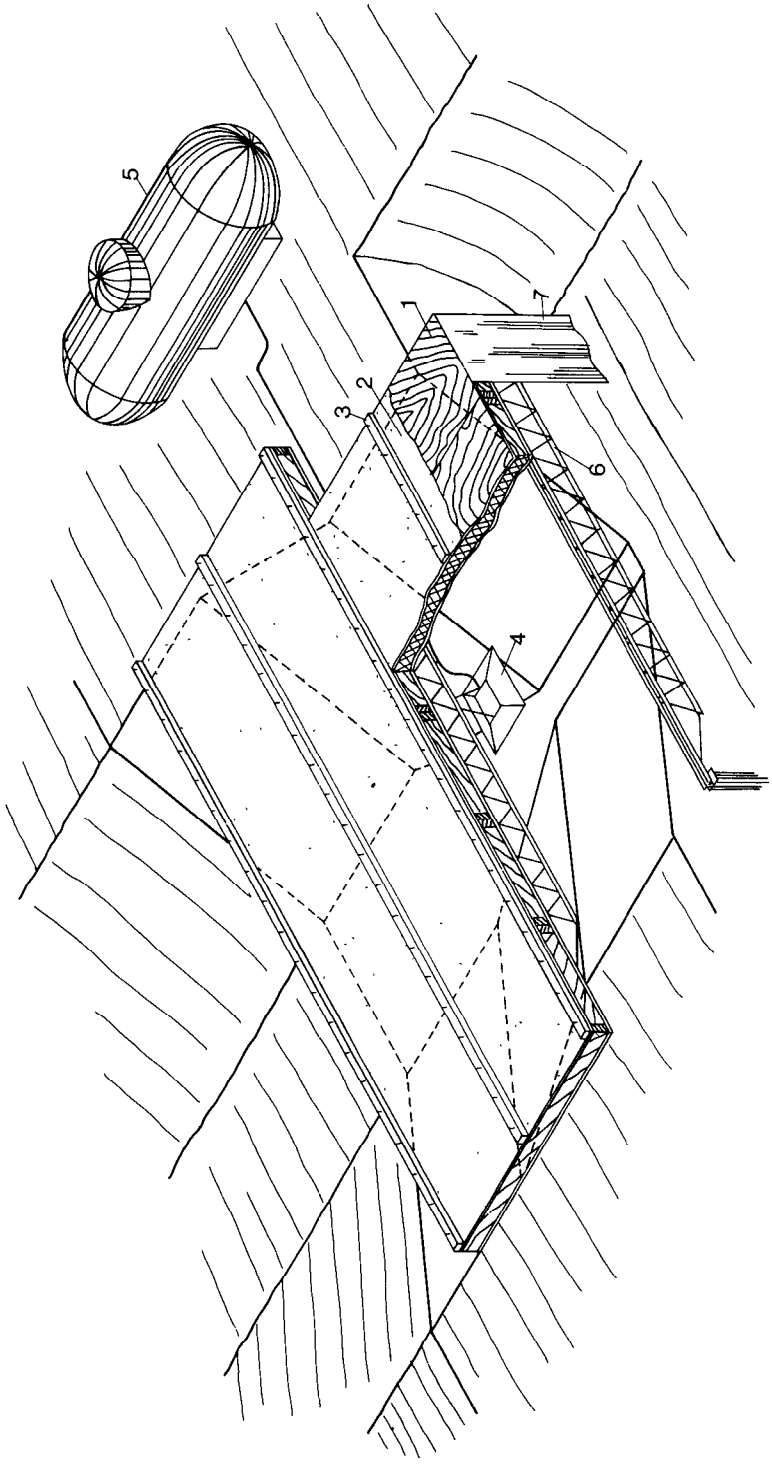

1. Roof sections composed of a series of insulated plywood boxes.
2. Roll-type roofing.
3. Roofing joints capped with wood battens held by scaffolding nails for easy removal. Where rain rather than just snow may be expected, battens should be omitted and entire roof given greater slope.
4. Infrared heater suspended over throat section of flume.
5. Propane gas tank for fueling heater; tank should not be enclosed.
6. Light, prefab steel roof member for roof supports; wooden members may be substituted. Roof should project 3 feet beyond flume exit and at least 3 feet upstream over approach section.
7. Canvas flap or drape both upstream and downstream. Enclosure should be vented if natural ventilation inadequate.

FIGURE 36.—Trapezoidal flume with infrared heater and roof installation for winter operation.

approach section provides an ice-free measuring section. The size of the infrared heater and gas tank depend on local climatic conditions and exposure. Cost of operation will generally range from $1.00 to $2.00 per day (1981).

Precalibrated Discharge Ratings Versus In-Place Calibrations

When a flume is installed in a stream, it is usually built in conformance with the dimensions of one that has been precalibrated. The question then arises whether to use the precalibrated rating for the new structure or to calibrate the structure in place. There are two schools of thought on the subject.

In many countries the precalibrated discharge rating is accepted, and independent discharge measurements are made only periodically to determine whether any statistically significant changes in the rating have occurred. If a significant change is detected, the new rating is defined by as many discharge measurements as are deemed necessary.

The Water Resoures Division takes the position that it is seldom desirable to accept the precalibrated rating without checking the entire rating in the field by current-meter measurements or by other methods of measuring discharge. Experience in the United States and elsewhere has been that, in many instances differences will exist between the model and the flume as constructed in the field. Despite precautions taken in the construction of the flume, the in-place dimensions may differ from the planned dimensions. Approach conditions in the stream channel may also cause the in-place rating to differ from the precalibrated rating. This may occur when the prototype structure is located immediately downstream from some element that causes the distribution of flow entering the flume to be nonuniform. Such elements in natural channels include bends, tributaries, and stream regulatory structures; in canals they include discharge pipes, canal junctions or turnouts, and abrupt transitions in canal size or shape. Furthermore, discharge ratings are subject to shift as the result of deposition of rocks and debris and as a result of algal growth in the flume. In short, the precalibrated rating is preliminary or interim until sufficient field discharge measurements have been made to verify or revise the rating.

Although the above policy of the Water Resources Division is general, there is ample justification for using flumes where ratings cannot be obtained otherwise. The increased emphasis on small basin studies requires the measurement of flows on small, flashy, often sediment- and rock-laden streams. However the conventional method of developing discharge-rating curves by measurement of selected discharges and stages is impractical and sometimes impossible on small streams. There is reason to believe that reliable theoretical ratings can be developed for supercritical-flow flumes of differing or nonstandard dimensions as long as there is adherence to the principles outlined in this report. This is borne out by the close agreement between theoretical and measured ratings obtained in the field tests of the different size trapezoidal-flow flumes discussed earlier. Where there is the need to measure high-velocity, debris- and rock-laden flow in inaccessible areas, nonstandard field designed flumes may be the answer. The overall design and placement measures described herein for the 1-, 3-, and 8-foot models should be kept in mind. Discharge measurements should still be sought as a check on the theoretical ratings.

Shifts in the head-discharge relation

After a flume has been installed as a control structure, its discharge rating may be subject to shifting; the occurrence and magnitude of the shifts can only be determined by measurements of discharge and concurrent head.

Discharge-rating shifts for critical-flow flumes

Shifts in the head-discharge relation of a critical-flow flume are most commonly caused by changes in the approach section—either in the channel immediately upstream from the flume or in the contracting section of the flume upstream from the throat. In either event, the

change is usually caused by the deposition of rocks and cobbles that drop out or cease to pass through the flume because of decreasing velocities in the approach. The flume throat is self-cleaning with regard to any sediment that might be in natural transport in the stream. Manual removal of the large debris should restore the original discharge rating of the critical-flow flume.

The deposition of rocks and debris upstream from the flume may divert most of the flow to the gage-side of the flume; the build-up of water at the gage will result in a shift of the discharge rating to the left; that is, the head observed for a given discharge will be greater than the head corresponding to that discharge in the original discharge rating table. Conversely, if most of the flow is diverted to the side of the flume opposite the gage, the discharge rating will shift to the right, meaning that the head observed for a given discharge will be less than the head corresponding to that discharge in the original discharge rating table.

If rocks and cobbles are deposited at the entrance to the throat of the flume, they may cause the discharge rating to shift because the head at the gage may be altered due to nonuniformity of flow through the throat.

Discharge-rating shifts for supercritical-flow flumes

The rocks and debris that are commonly deposited in the level approach reach of a supercritical-flow flume usually have little effect on the head-discharge relation. However, when the deposition is heavy and unsymmetrical, as in figure 37 when debris has accumulated almost entirely on the left side of the approach reach, the head-discharge relation for flow in the throat will be affected. Figure 37 shows how the flow pattern in the throat reach has been distorted. The head on the left side of the throat reach is significantly higher than that on the right side; the head recorded depends on the location of the pipe intake or bubble orifice in the head-measurement cross section.

Deposition at the head of the supercritical-flow reach of the flume, even when symmetrical,

FIGURE 37.—Effect of unsymmetrical deposition in flume approach on flow in the throat.

may shift the head-discharge relation to the left by raising the elevation of critical depth at the head of the reach. It will be recalled that the measured head for a given discharge is a function of both the elevation of critical depth upstream and the geometry of the flume between the critical-depth cross section and the head-measurement section. The farther downstream the measurement section is from the critical-depth cross section, the smaller the influence of changes in critical-depth elevation. Although the actual shifts in head that may occur at the measurement section will usually be small, they can be highly significant because of the sensitivity of the head-discharge relation of supercritical flow.

Large rocks driven by high-velocity flow through the supercritical-flow reaches of the flume may erode the walls and floor of those reaches. The resulting increase in roughness and decrease in elevation of the concrete in those reaches may cause shifts in the discharge relation. The two effects tend to be compensating; an increase in roughness will shift the discharge rating to the left, and a decrease in elevation of the concrete surface will shift the discharge rating to the right. However, the latter effect usually predominates.

Summary

This chapter discusses the theory, design, and application of various types of flumes for the measurement of open channel flow. Emphasis is placed on the Parshall and supercritical-flow trapezoidal type flumes.

Complete design and discharge-rating information on Parshall flumes from 1-inch to 50-feet is provided for both free-flow and submerged operating conditions. Criteria and procedures for selecting and installing Parshall flumes are provided.

In the case of the supercritical-flow trapezoidal flume, three sizes are discussed, based on field tests by the authors. Field discharge ratings and theoretical ratings for the 1-, 3-, and 8-foot sizes are presented and shown to be in close agreement. Criteria and procedures for the design, selection, fitting, construction, and operation of the supercritical-flow trapezoidal flumes are provided.

References

Bermel, K. J., 1950, Hydraulic influence of modifications to the San Dimas critical depth measuring flume: American Geophysical Union, Transcript, v. 31, no. 5, p. 763-768.

Chamberlin, A. R., 1957, Preliminary model tests of a flume for measuring discharge of steep ephemeral streams: Colorado Agricultural and Mechanical College, Rocky Mountain Forest and Range Experimental Station CER57ARC12, 28 p.

Chow, V. T., 1959, Open-channel hydraulics: New York, McGraw-Hill, 680 p.

Cone, V. M., 1917, The Venturi flume: Journal of Agricultural Research, v. 9, no. 4, April 23, 14 p.

Davis, Sydney, 1963, Unification of Parshall flume data: American Society of Civil Engineers, Paper 3511, Transcript, v. 128, pt. 3, p. 339-421.

Dodge, R. A., Jr., 1963, Discussion of unification of Parshall flume data, by Davis, Sydney: American Society of Civil Engineers, Paper 3511, Transcript, v. 128, pt. 3.

Parshall, R. L., 1926, The improved Venturi flume: American Society of Civil Engineers, Transactions, v. 89, p. 841-851.

———, 1953, Parshall flumes of large size: Colorado Agricultural Experimental Station Bulletin 426A, 40 p.

Robinson, A. R., 1957, Parshall measuring flumes of small sizes: Colorado Agricultural and Mechanical College, Agricultural Experimental Station, Bulletin 61, 12 p.

———, 1959, Report on trapezoidal measuring flumes for determining discharge in steep ephemeral streams: Colorado Agricultural and Mechanical College, Rocky Mountain Experimental Station, CER59AAR1, 13 p.

U.S. Agricultural Research Service, 1962, Field manual for research in agricultural hydrology: U.S. Department of Agriculture, Handbook 724, 215 p.

Wilm, H. G., Cotton, John S., and Storey, H. C., 1938, Measurement of debris-laden stream flow with critical-depth flumes: American Society of Civil Engineers, Transcript, v. 103, p. 1237-1253.