Document Discussion

ENTERED

Return To Library > Records 2 > ERID-110500 through ERID-110999 > ERID-110570 ENGINEERING DRAWINGS, PONDS/LAGOONS CONVERSION, ENG-C45310 FOR SWMU 46-005

Created By:	Kathleen Steel/USER/LANL
File name:	Target-ERID # for Domino.txt
Version:	2.0
Document Type:	RPF Record

Document Details:

Title:	ERID-110570 ENGINEERING DRAWINGS, PONDS/LAGOONS CONVERSION, ENG-C45310 FOR SWMU 46-005
Log ID:	2338
ERID Number.StartPage:	110570
Transmitted By:	PAULA BERTINO
Office of Record:	Corrective Actions Projects
Date Received:	08/27/2010
Official Use Only:	N
Page Count:	5
Record Type:	Drawing
Document Date:	06/26/87
To:(Addressees - Organization)	N/A
From:(Senders - Organization)	PAN AM WORLD SERVICE FOR LANL
Other Document Number(s):	PKG-1827
TA:	46
PRS Number(s):	46-005

October 22nd, 2009

*** Denotes Fields that are mandatory.**

To download this file, right mouse click on the file and select 'Save to Disk' or 'Save Target as'

Target-ERID # for Domino.txt <-- This link points to this version.

To check-out and/or edit this file, select Edit Document or Check Out Document from the Document menu above.

File Cabinet: Records 2

Binder Category: ERID-110000 through ERID-119999

Binder: ERID-110500 through ERID-110999

34149

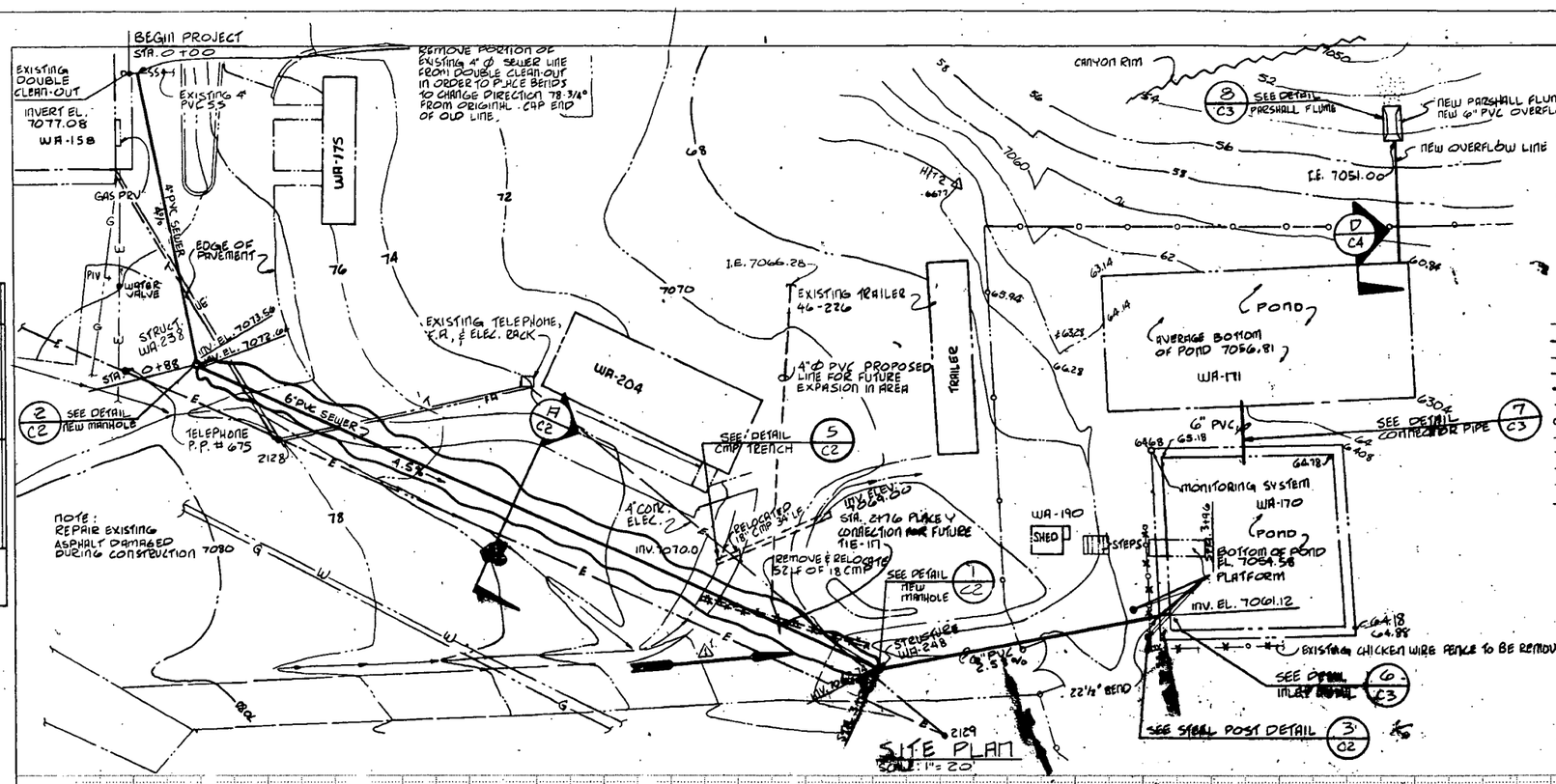

SITE PLAN
SCALE: 1" = 20'

POINT	NORTH	EAST	ELEV.
BRASS CAP 1032	1,764,623.34	492,703.04	7054.66
HUB & TACK 1	1,765,268.26	491,342.10	7079.47
HUB & TACK 2	1,765,311.97	491,587.01	7065.97
CONC. NAIL	1,765,378.80	491,359.87	7080.79

LEGEND

- EXISTING CONTOURS
- EXISTING SITE FEATURES
- FLOW DIRECTION
- E — EXISTING ELECTRICAL
- NEW SEWER
- SS — EXISTING SANITARY SEWER
- EXISTING FENCE
- T — EXISTING TELEPHONE
- UE — EXISTING UNDERGROUND ELECTRIC
- FA — EXISTING FIRE ALARM
- W — EXISTING WATER
- G — EXISTING GAS

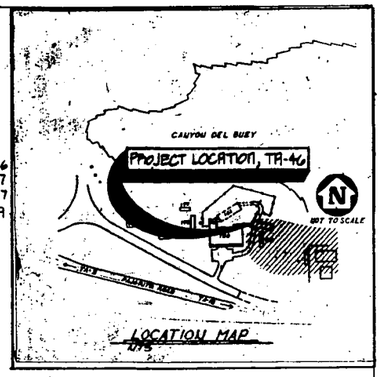

NOTE:
1. EXISTING CONSTRUCTION OF LAGOONS FROM DRAWING ENG-C SR06743 SOLAR POND.
2. SURVEYING DATA GATHERED FROM PAN AM SURVEY DEPARTMENT, TA-46 SEWER LINE SURVEY DATED 6-8-87 & ENG-3 SURVEY-MODIFICATION OF SOLAR TO WASTEWATER PONDS, TA-46, ENG 46-39
3. VERIFY UNDERGROUND UTILITY LOCATIONS BEFORE EXCAVATING. OBTAIN AND SUBMIT EXCATION PERMIT BEFORE STARTING CONSTRUCTION.
4. USE CARE IN REMOVING EXISTING 52 LF CMP TO BE RELOCATED.

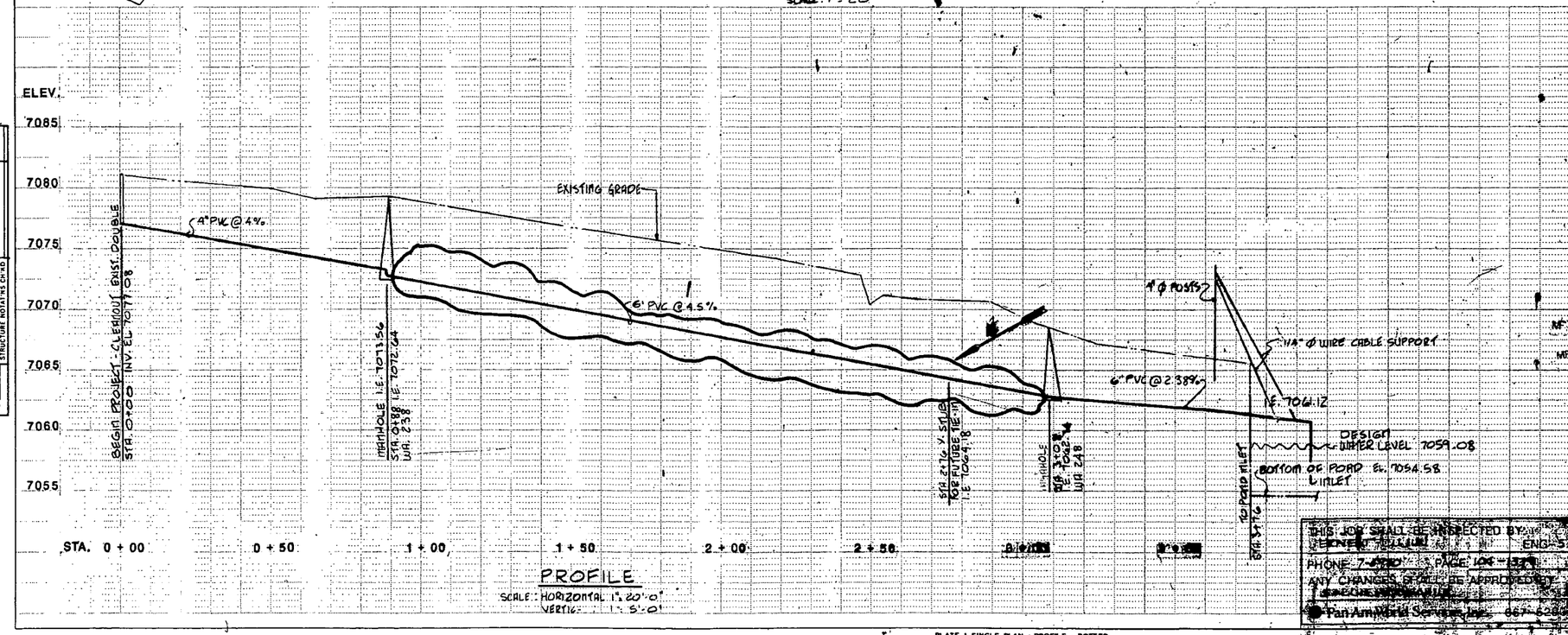

PROFILE
SCALE: HORIZONTAL 1" = 20'-0"
VERTICAL 1" = 5'-0"

THIS JOB SHALL BE INSPECTED BY: [redacted] ENG-5
PHONE 7-[redacted] PAGE 10[redacted]
ANY CHANGES OR FIELD DECISIONS APPROVED BY [redacted]
Pan Am World Services, Inc. 667-6280

PLATE 1 SINGLE PLAN - PROFILE - DOTTED
CHARLES BRUNING COMPANY
MADE IN U.S.A.

REC'D ___ LOGGED ___ TO VAULT ___

PROFILE	BY	DATE
SURVEYED		
PLOTTED		
GRADES CHECKED		
NOTE BOOK		
NO.		
STRUCTURE NOTATIONS CH'KD		

PLAN	BY	DATE
SURVEYED		
PLOTTED		
GRADES CHECKED		
NOTE BOOK		
NO.		
ALL OF WAY CHECKED		

[redacted]

Pan Am World Services, Inc.
A PAN AM SERVICES DIVISION

[redacted]

DRAWN	J.E. GONZALES
CHECKED	S.K.D.
DESIGN	S.K.D.
CHECKED	[illegible]
RELEASED	D. VOLKMAN
DATE	12-11-87

BLDG. NO. TA-46

SUBMITTED: RECOMMENDED: APPROVED: 7/4/88

Los Alamos National Laboratory
Los Alamos, New Mexico 87545

SHEET C1 OF 1 6

CLASSIFICATION: [redacted] REVIEWER: DATE 1-19-88

REQUISITION: [redacted] REQUISITION GROUP: 3074 [redacted]

DRAWING NO. ENG-C 45310

REV.

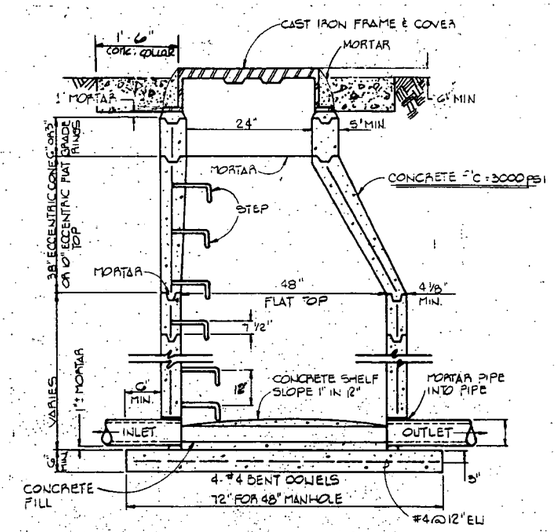

PRECAST CONCRETE MANHOLE (1 / C1)
NTS

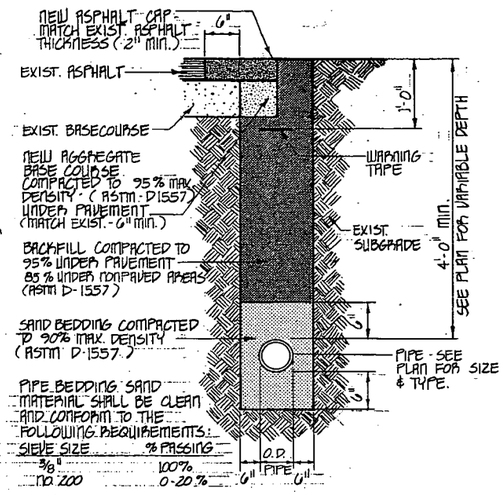

SINGLE TRENCH SECTION (A / C1)
SCALE: 1" = 1'-0"

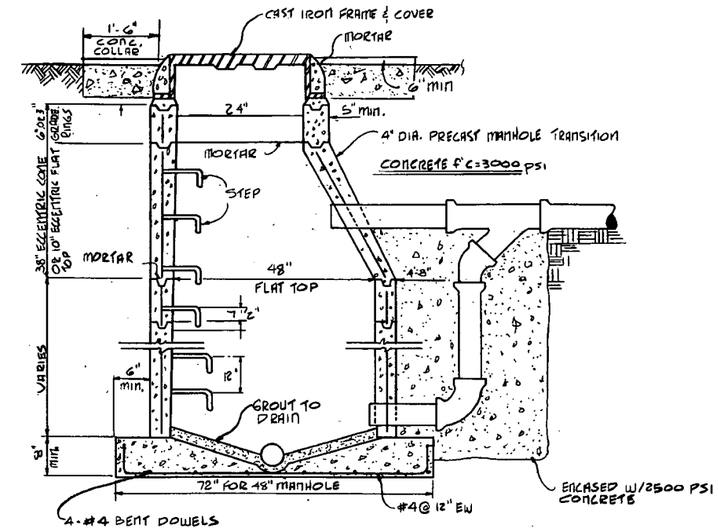

PRECAST CONCRETE SANITARY SEWER DROP MANHOLE DETAIL (2 / C1)
NTS

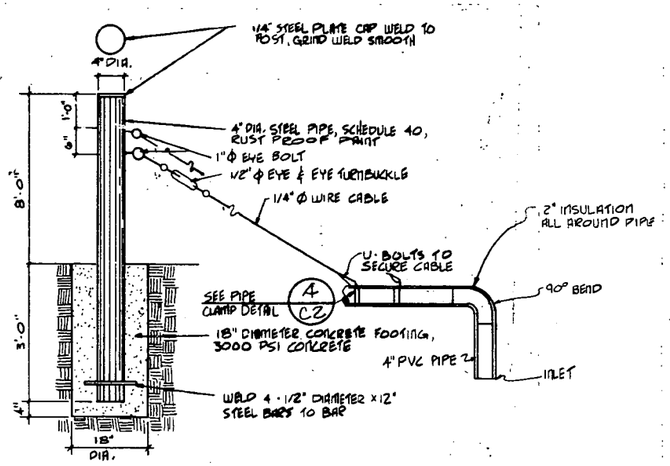

STEEL POST DETAIL (3 / C1)
NTS

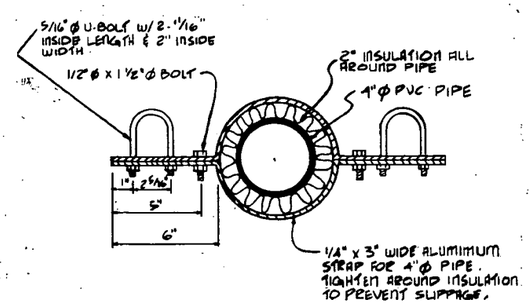

PIPE CLAMP DETAIL (4 / C2)
NTS

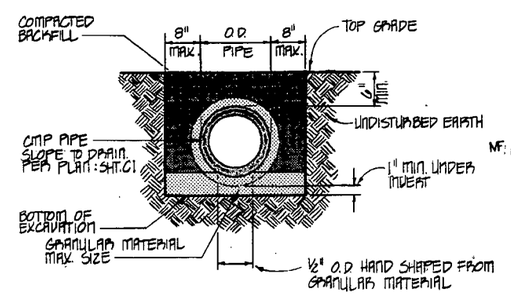

CMP TRENCH (5 / C1)
NTS

NO.	DATE	CLASS REV.	REVISIONS	DWG.	DES.	CHKD.	REQ. GRP.	REQ. D.O.	ENG. GRP.	ENG. D.O.

Pan Am World Services, Inc.
LABORATORY SERVICES DIVISION

PONDS/LAGOONS CONVERSION

CIVIL: DETAILS, MANHOLES, TRENCH, & SUPPORT

DRAWN	M. SHORTER / J.E. GONZALES
CHECKED	J. Lopez
DESIGN	S. DONAHUE
CHECKED	
RELEASED	D. WORKMAN
DATE	6-26-87

BLDG. WA-158 TA-46

SUBMITTED M. E. Smith C2 Smith | RECOMMENDED | APPROVED 7/1/87

Los Alamos — Los Alamos National Laboratory, Los Alamos, New Mexico 87545

SHEET C2 2 OF 6

CLASSIFICATION U REVIEWER L. A. Kendall DATE 7-1-87

REQUESTING DIV. AT-7 J. T. Watson
REQUESTING GROUP AT-00 J. T. Watson
LAB JOB NO. 9074-46
DRAWING NO. ENG-C 45310
REV.

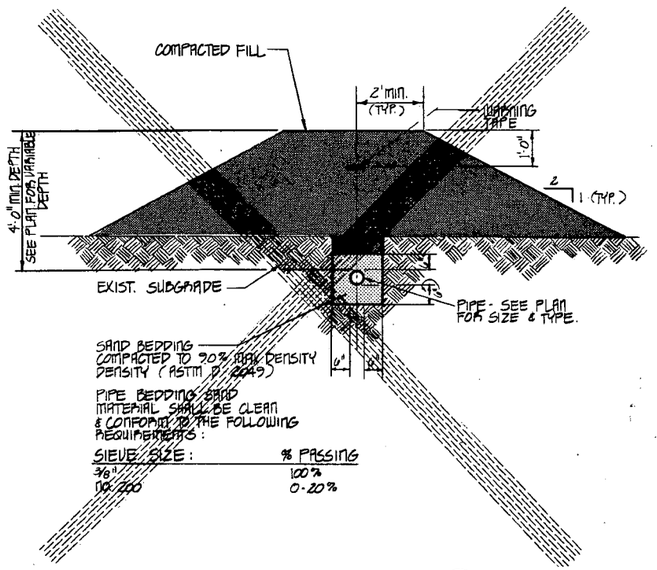

SECTION B/C1
SCALE : 1/2" = 1'-0"

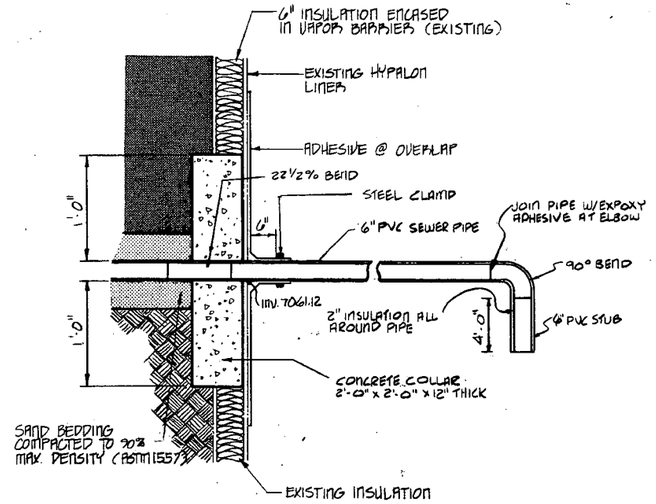

INLET DETAIL 6/C1
SCALE: NTS

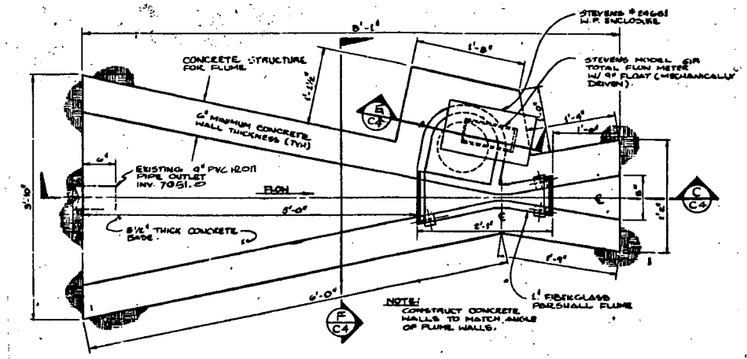

PLAN VIEW - FLUME 8/C1
SCALE: NTS

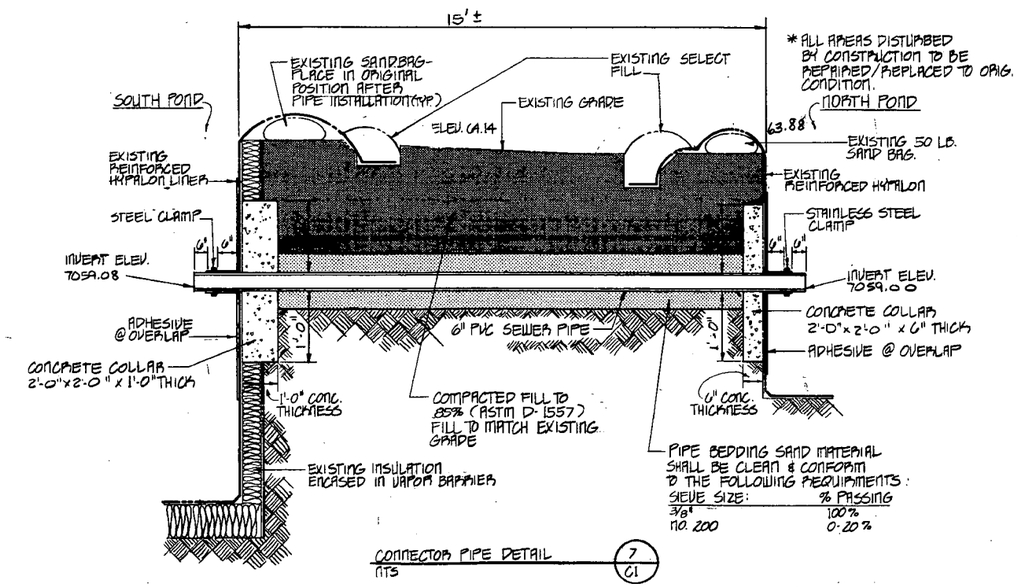

CONNECTOR PIPE DETAIL 7/C1
NTS

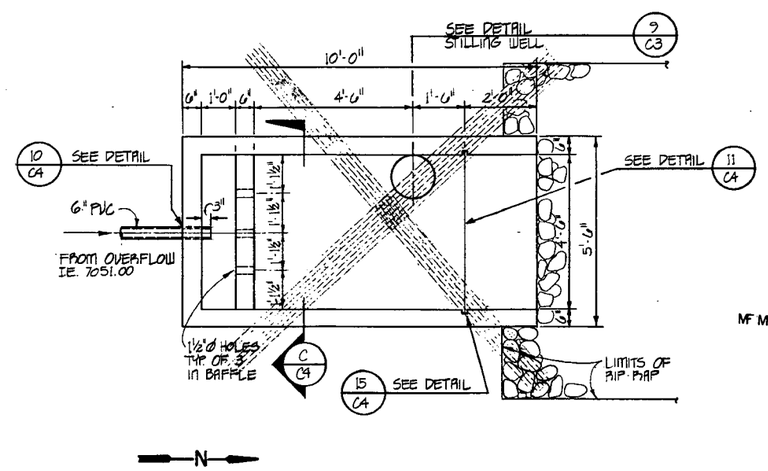

DRAIN & CONCRETE WEIR BOX PLAN 8/C1
SCALE: 1/2" = 1'-0"

NO.	DATE	CLASS REV.	REVISIONS	DWG.	DES.	CHKD.	REQ. GRP.	REQ. D.O.	ENG. GRP.	ENG. D.O.

Pan Am World Services, Inc.
LABORATORY SERVICES DIVISION

PONDS/LAGOONS CONVERSION

CIVIL DETAILS

DRAWN	M. SHUPTER
CHECKED	J. Lopez
DESIGN	S. DONAHUE
CHECKED	
RELEASED	D. VOLKMAN
DATE	6-26-87

BLDG. WA-158 TA-46
SUBMITTED M. E. Smith C.E. Butler RECOMMENDED APPROVED 8/14/87

Los Alamos — Los Alamos National Laboratory, Los Alamos, New Mexico 87545

SHEET C3 3 OF 6

CLASSIFICATION U REVIEWER J. D. Kiesler DATE 7-1-87

REQUESTING DIV. AT-7 J. Watson
REQUESTING GROUP J. Watson
LAB JOB NO. 9074-46
DRAWING NO. ENG-C 45310
REV.

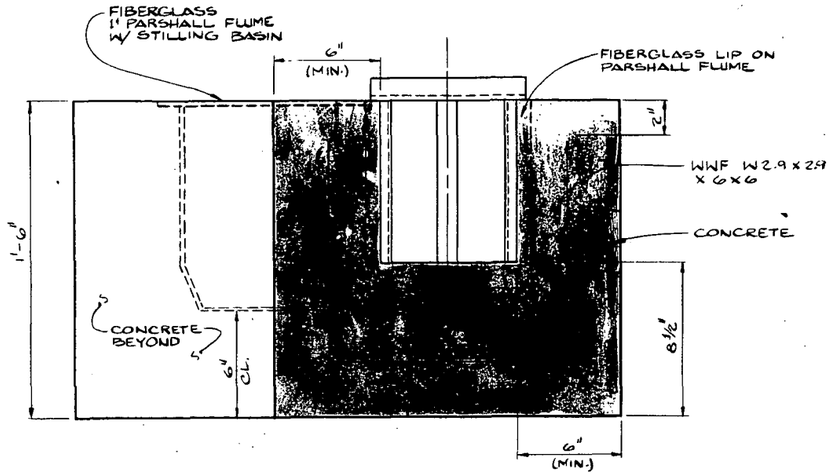

ELEVATION (F / C3)
SCALE: 3" = 1'-0"

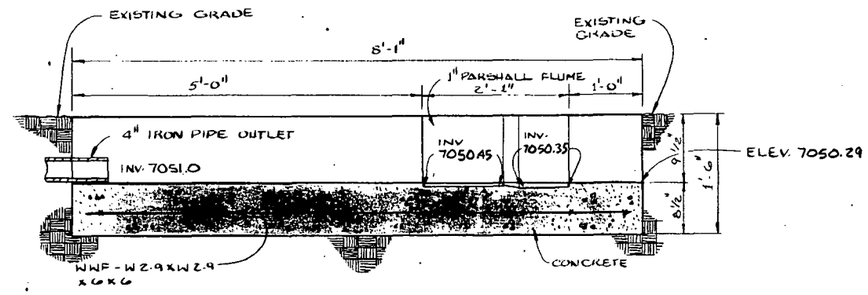

SECTION (C / C3)
SCALE: 1" = 1'-0"

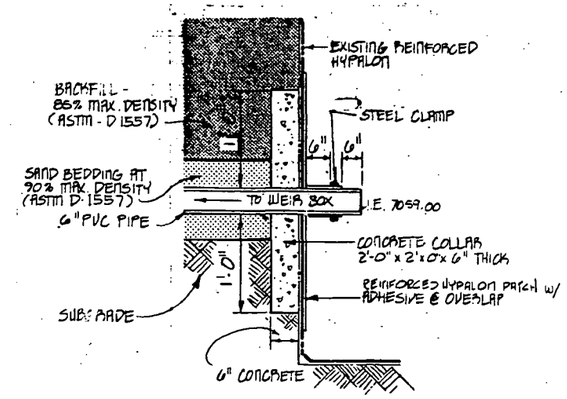

SECTION - OUTLET (D / C1)
NTS

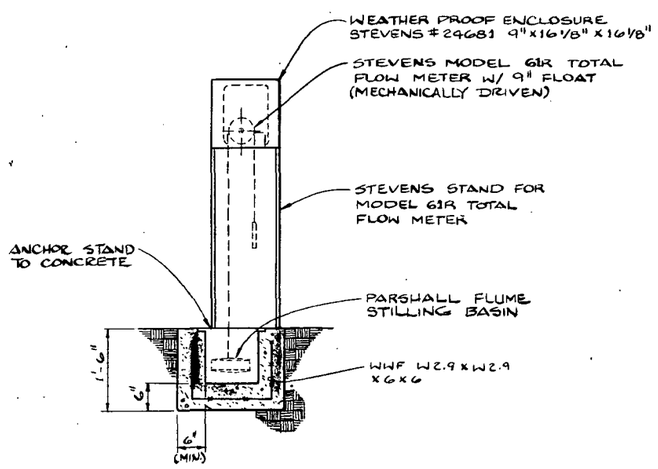

SECTION (E / C3)
SCALE: 3/4 = 1'-0"

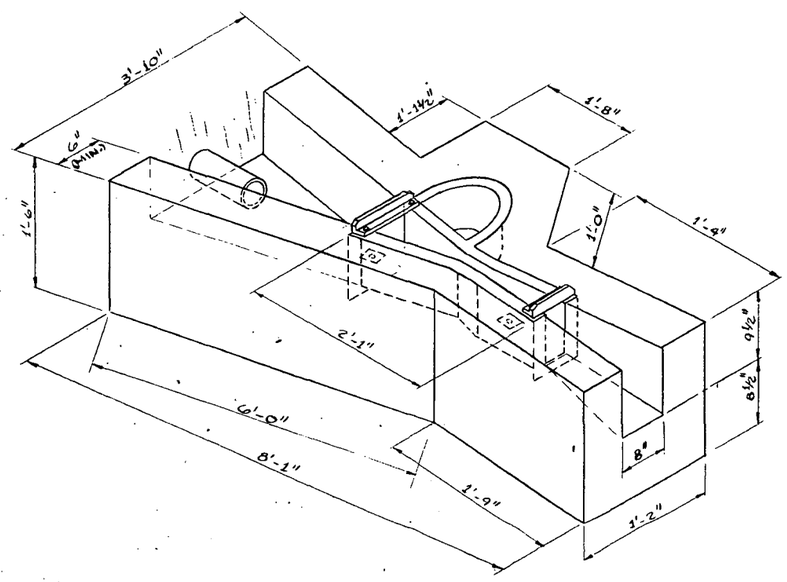

ISOMETRIC - FLUME & CONC.
N.T.S.

NO.	DATE	CLASS REV.	REVISIONS	DWG.	DES.	CHKD	REQ. GRP.	REQ. D.O.	ENG. GRP.	ENG. D.O.

MF MF MF

Pan Am World Services, Inc.
LABORATORY SERVICES DIVISION

PONDS/LAGOONS CONVERSION

CIVIL: DETAILS

BLDG. WA-158 TA-46

DRAWN	M. SHUSTER
CHECKED	J. LOPEZ
DESIGN	S. DONAHUE
CHECKED	[signature]
RELEASED	D. VOLKMAN
DATE	6-26-87

SUBMITTED M. E. Smith C E Baxter
RECOMMENDED [signature]
APPROVED [signature] 8/1/88

Los Alamos — Los Alamos National Laboratory, Los Alamos, New Mexico 87545

SHEET C4 — 4 OF 6

CLASSIFICATION U — REVIEWER [signature] — DATE 7-1-89

REQUESTING DIV. AT-7 J. Watson
REQUESTING GROUP AT-DO J. Watson
LAB JOB NO. 9074-46
DRAWING NO. ENG-C 45310
REV.

CIVIL GENERAL NOTES

A. GENERAL:

1. DO NOT SCALE DRAWINGS FOR CONSTRUCTION DIMENSIONS.

2. FIELD VERIFY DIMENSIONS PRIOR TO FABRICATION.

3. LAYOUT OF WORK: THE INITIAL CONTROL STAKES WILL BE ESTABLISHED BY THE GOVERNMENT AND INDICATED ON THE DRAWINGS. IT SHALL BE THE RESPONSIBILITY OF THE CONTRACTOR TO PROTECT THESE CONTROL STAKES. THE CONTRACTOR SHALL FURNISH, AT HIS OWN EXPENSE, ALL STAKES, TEMPLATES, PLATFORMS, EQUIPMENT, TOOLS, MATERIALS AND LABOR TO LAYOUT ANY AND ALL PARTS OF THE WORK TO THE LINES AND GRADES AS INDICATED.

4. VERIFY UNDERGROUND UTILITY LOCATIONS BEFORE EXCAVATING. OBTAIN AND SUBMIT EXCAVATION PERMIT BEFORE STARTING CONSTRUCTION.

5. REPAIR ALL AREAS DAMAGED DURING CONSTRUCTION TO MATCH EXISTING ADJACENT AREAS.

6. KEEP WORK SITE IN AN ORDERLY CONDITION AND AT PROJECT COMPLETION, REMOVE ALL WASTE. LEAVE WORK SITE IN A NEAT AND ORDERLY CONDITION. DISPOSE OF REMOVED MATERIALS AS DIRECTED BY THE CONTRACTING OFFICER, UNLESS NOTED.

7. ~~FREE DRY CLEANED CONTENTS OF EXISTING PONDS AND DISPOSE OF AS DIRECTED BY THE CONTRACTING OFFICER.~~

8. REMOVE ALL DEBRIS FROM EXISTING PONDS AND SURROUNDING AREA. CARE SHOULD BE TAKEN WHEN REMOVING DEBRIS FROM THE PONDS IN ORDER NOT TO TEAR THE HYPALON LINER. DISPOSE OF REMOVED MATERIALS AS DIRECTED BY THE CONTRACTING OFFICER.

9. WHERE PENETRATIONS INTO THE LINER ARE NECESSARY, CARE SHOULD BE USED IN CUTTING THE HYPALON LINER AND PATCH AROUND THE PENETRATION FOR A WATERTIGHT SEAL.

10. CHECK HYPALON LINER AT EACH POND FOR POSSIBLE TEARS. REPAIR IF TORN TO COMPLY WITH ENVIRONMENTAL IMPROVEMENT DIVISION REQUIREMENTS FOR WATER TIGHTNESS.

B. EARTHWORK AND GRADING:

1. THE CONTRACTING OFFICER SHALL APPROVE THE SOILS AND THE METHODS OF PLACEMENT AND COMPACTION. EARTHWORK SHALL NOT BE DONE IN FROZEN OR WET GROUND.

2. FILL MATERIAL SHALL BE CLEAN MATERIAL FREE OF ORGANIC MATTER FROZEN MATERIAL, TRASH, ROCKS OVER 3 INCHES IN DIAMETER, CLAY AND OTHER DELETERIOUS SUBSTANCES.

3. COMPACT FILL MATERIAL IN 8 INCH MAXIMUM LIFTS TO THE FOLLOWING PERCENTAGES OF MAXIMUM DENSITY. THE LABORATORY COMPACTION STANDARD TO DETERMINE MAXIMUM DENSITY AND OPTIMUM MOISTURE SHALL BE ASTM D1557.

   % OF MAXIMUM DENSITY SHALL BE AS FOLLOWS;

   95% SUBGRADE, FILL AND BACKFILL UNDER FOUNDATIONS, SLABS, AND PAVED AREAS.

   90% STRUCTURE BACKFILL.

   85% GENERAL AREA GRADING NOT INCLUDED ABOVE.

4. SUBGRADE SHALL BE SCARIFIED PRIOR TO FILLING OPERATION. WATER SHALL BE ADDED TO THE SOILS, OR THEY SHALL BE DRIED, UNTIL THEY CONTAIN (+ OR 2 2%) OPTIMUM MOISTURE. MOISTURE SHALL BE DISTRIBUTED UNIFORMLY THROUGHOUT EACH LAYER. LABORATORY TEST MAXIMUM DENSITY AND FIELD DENSITY OF ALL FILL MATERIAL. FREQUENCY OF TESTS: ONE PER 250 CY OF 8 INCH MAXIMUM LIFTS OR LESS AS DETERMINED BY THE CONTRACTING OFFICER. DETERMINE FIELD DENSITY PER ASTM D2922; FIELD MOISTURE PER ASTM D3017.

5. OVER EXCAVATION OF IN-SITU MATERIAL WILL NOT BE PERMITTED. IN THE EVENT OVER EXCAVATION OCCURS, BACKFILL AND COMPACTION, AND/OR THE MATERIAL USED TO CORRECT THE OVER EXCAVATION, SHALL BE AT THE DISCRETION OF THE CONTRACTING OFFICER, AND AT NO ADDITIONAL COST TO THE GOVERNMENT.

6. REMOVE EXCESS EXCAVATED MATERIAL FROM JOB SITE TO AN AREA APPROVED BY THE CONTRACTING OFFICER.

C. BASE COURSE:

1. BASE COURSE SHALL MEET THE REQUIREMENTS OF CLASS I MATERIALS AS SPECIFIED FOR BASE MATERIAL STOCK NO. 2700-00-0003.

2. BASE COURSE SHALL BE COMPACTED TO 95% OF MAXIMUM DENSITY IN ACCORDANCE WITH ASTM D1557. FIELD CONTROL OF IN-PLACE MATERIAL, DENSITY WILL BE DETERMINED IN ACCORDANCE WITH THE NUCLEAR METHOD (ASTM D2922), THE RUBBER BALLOON METHOD (ASTM D2167), OR THE SAND CONE METHOD (ASTM D1556). FIELD CONTROL OF MOISTURE CONTENT WILL BE DETERMINED BY THE NUCLEAR METHOD (ASTM D3017) OR THE LABORATORY METHOD (ASTM D2216).

D. ASPHALT PAVEMENT:

1. WEED KILLER USED SHALL BE "PRINCEP 80W" (SIMAZINE) OR VELPAR (HEXAZINANE) APPLIED AS PER LOS ALAMOS NATIONAL LABORATORY PEST CONTROL POLICY.

2. ASPHALT PRIME COAT SHALL CONFORM TO FEDERAL SPECIFICATIONS SS-A-671, DESIGNATED MC-70, WITH ADDITIONAL REQUIREMENT THAT THE RESIDUE FROM DISTILLATION TO 680 DEGREES F. SHALL SHOW A NEGATIVE SPOT WHEN SUBMITTED TO AASHTO STANDARD METHOD T 102, USING THE STANDARD NAPTHA SPECIFIED IN PARAGRAPH 3 THEREOF. BITUMINOUS MATERIAL FOR THE PRIME COAT SHALL BE APPLIED IN QUANTITIES OF NOT LESS THAN 0.25 GALLON PER SQUARE YARD OF SUBGRADE. ANY PRESCRIBED APPLICATION SHALL BE DIVIDED, IF NECESSARY, INTO TWO APPLICATIONS TO AVOID FLOWING OFF THE SURFACE.

3. ASPHALT PETROLEUM FOR ROAD AND PAVEMENT CONSTRUCTION SHALL CONFORM TO FEDERAL SPECIFICATION SS-A-706D, GRADE AC-10, 85-100 PENETRATION WITH 1% ANTI-STRIPPING AGENT.

4. ASPHALTIC CONCRETE WEARING SURFACE SHALL CONFORM TO PAN AM SPECIFICATION FOR ASPHALTIC CONCRETE AGGREGATES FY. 87 STOCK NO. 2700-00-0027 ASPHALTIC PAVEMENT SHALL BE CONSTRUCTED ON APPROVED BASE COURSE. CONSTRUCTION SHALL BE PERFORMED WHEN ATMOSPHERIC AND SURFACE CONDITIONS ARE DRY WITH BOTH TEMPERATURES ABOVE 40 DEGREES F.

5. WHERE NEW ASPHALTIC CONCRETE MEETS EXISTING PAVEMENT, THE EXISTING PAVEMENT SHALL BE SHAPED TO PROVIDE A SQUARE SHOULDER. COMPACTED BASE COURSE SHALL BE BROUGHT UP TO THE APPROPRIATE ELEVATION AND THE MATCH AREA SHALL BE PRIMED WITH EMULSION OR LIGHT CUTBACK ASPHALT. THE ASPHALT CONCRETE WEARING SURFACE SHALL THEN BE APPLIED AND COMPACTED BY ROLLING OR OTHER APPROVED METHOD.

6. ASPHALTIC CONCRETE SHALL BE COMPACTED TO AT LEAST 96% OF MAXIMUM MARSHALL DENSITY.

E. SEWER PIPING

1. WHERE A GRAVITY FLOW SEWER LINE MUST CROSS ABOVE A WATER LINE OR IS LESS THAN 2 FEET BELOW THE WATERLINE, THE SEWER SHALL BE CLASS 50 DUCTILE IRON FOR A DISTANCE OF 10 FEET ON EACH SIDE OF THE WATERLINE. JOINTS IN THE SEWER LINE IMMEDIATELY BELOW OR ABOVE THE WATERLINE SHOULD BE AVOIDED. DUCTILE IRON PIPE SHALL CONFORM TO AWWA C150 AND C151. FITTINGS AND JOINTS SHALL CONFORM TO AWWA C110 AND C111.

2. GRAVITY SEWER AND APPURTENANCES SHALL CONFORM TO ASTM D3034, TYPE PSM POLYVINYLCHLORIDE (PVC), SDR-35 UNLESS NOTED.

3. CLEANOUT COVER AND RING: CAST IRON, ASTM A48, FACTORY APPLIED HOT ASPHALTUM FINISH.

4. SANITARY SEWER LINE SHALL BE PRESSURE TESTED UNDER A 10 FT. HEAD OF WATER FOR ONE HOUR WITH NO DROP ALLOWED.

5. INSTALL PLASTIC IDENTIFICATION TAPE IN THE TRENCH ABOVE ALL UTILITY LINES. THE TAPE SHALL BE INSTALLED ONE FOOT BELOW FINISHED GRADE. MARKING RIBBON SHALL BE PLASTIC TAPE AS MANUFACTURED BY REEF INDUSTRIES DIVISION OF GRIFFOLYN COMPANY, INC. OR APPROVED EQUAL. COLOR AND MARKING SHALL BE AS FOLLOWS:

   A. SEWER: GREEN "CAUTION - SANITARY SEWER LINE BELOW:

6. WHEN NON-METALLIC UTILITY LINES ARE INSTALLED A TRACER WIRE WILL BE PLACED IN THE SAME TRENCH WITH THE UTILITY LINE. THE WIRE IS TO BE UNBROKEN AND CONTINUOUS OVER ENTIRE LENGTH OF UTILITY LINE AND INSTALLED A MINIMUM OF ONE FOOT ABOVE THE LIEN, BUT BELOW PLASTIC IDENTIFICATION TAPE. A LOOP OF WIRE SHALL BE STUBBED TO ABOVE FINISHED GRADE AT EACH MANHOLE, CLEANOUT, VALVE BOX OR UTILITY RISER. WIRE SHALL BE A MINIMUM NO. 6 AWG, STRANDED COPPER, BARE OR WITH THW INSULATION. OMIT TRACER WIRE IF A GROUND/CONTINUITY IS FURNISHED.

F. PIPE TRENCHING

1. THE WIDTH OF TRENCHES FOR PIPE AND CONDUITS SHALL NOT BE GREATER THAN NECESSARY TO PERMIT SATISFACTORY JOINTING AND THOROUGH TAMPING OF THE BEDDING. SAND SHALL BE USED FOR BEDDING. BACKFILL SHALL BE SELECTED MATERIAL FROM THE EXCAVATION. SHEETING AND BRACING SHALL BE SUCH AS TO PREVENT CAVING IN AND TO SAFEGUARD WORKMEN. TRENCHES EXCAVATED IN ROCK SHALL BE EXCAVATED 6 INCHES BELOW INVERT OF PIPE AND BACKFILLED TO GRADE WITH SELECTED EARTH OR SAND FREE OF ROCK, RUBBLE, AND ORGANIC MATTER.

2. WHERE PIPE WILL BE PLACED ON FILL, THE CONTRACTOR SHALL FIRST CONSTRUCT THE FILL OR EMBANKMENT AS SPECIFIED HEREIN. COMPACT FILL MATERIAL TO A MINIMUM ELEVATION OF 18 INCHES ABOVE THE TOP OF THE PIPE. THE CONTRACTOR SHALL THEN CONSTRUCT THE TRENCHES AS REQUIRED FOR THE PIPE.

3. AFTER THE PIPE HAS BEEN INSTALLED AND ALL TESTING IS COMPLETED, THE CONTRACTOR SHALL BACKFILL AROUND THE PIPE WITH SAND AND THEN WITH SELECTED FILL MATERIAL, AT OPTIMUM MOISTURE CONTENT AND IN LAYERS NOT TO EXCEED 6 INCHES IN DEPTH. CARE SHALL BE TAKEN SO AS TO INSURE THOROUGH COMPACTION OF THE SAND UNDER AND AROUND THE FULL LENGTH OF PIPE. EACH LAYER OF BACKFILL SHALL BE COMPACTED BY MECHANICAL RAMMERS AND/OR TAMPERS UNTIL THE FILL HAS REACHED AN ELEVATION OF 18 INCHES ABOVE THE TOP OF THE PIPE. THE REMAINDER OF THE TRENCH MAY BE FILLED AND COMPACTED WITH HEAVY EQUIPMENT, PROVIDED THAT THEIR OPERATION SHALL BE CONDUCTED SO THAT NO DAMAGE TO THE PIPE RESULTS.

4. SAND BEDDING SHALL BE COMPACTED BY VIBRATORY METHODS. SAND SHALL BE COMPACTED TO 90% OF MAXIMUM DENSITY, TESTED IN ACCORDANCE WITH THE REQUIREMENTS OF ASTM D1557.

5. WHERE NEW TRENCHES CROSS EXISTING UTILITY LINES HAND EXCAVATE WITHIN 5 FEET OF EXISTING LINE.

6. INSTALL BURIED UTILITY WARNING TAPE ABOVE THE INSTALLED UTILITY AT APPROXIMATELY ONE FOOT BELOW FINISHED GRADE.

7. UTILITY BURY DEPTHS SHALL BE AS FOLLOWS:

   SEWER LINE . . . . . 4'-0" MINIMUM

G. CORRUGATED STEEL DRAINAGE PIPE (CSP)

1. CSP SHALL BE PLACED IN ACCORDANCE WITH THE LINES AND GRADES SHOWN ON THE GRADING PLAN, PAVING PLAN AND DETAILS. THE PIPE SHALL BE PLACED ON A CONSTANT SLOPE.

2. CSP SHALL BE CONSTRUCTED OF CORRUGATED METAL PIPE IN ACCORDANCE WITH AASHTO M-36, ROUND SHAPE; 16 GAUGE GALVANIZED STEEL. JOINTS, IF REQUIRED, SHALL BE MADE WITH BANDS OF THE SAME MATERIAL AND THICKNESS AS THAT OF THE PIPE. BANDS SHALL BE A MINIMUM 7 INCHES WIDE AND LAP AND EQUAL PORTION OF THE CONNECTING PIPES. GALVANIZED STEEL ANGLES AND 1/2 INCH BOLTS SHALL BE USED TO CONNECT THE BAND ENDS.

3. METAL PIPE END SECTIONS SHALL BE AS PER AASHTO M-36. END SECTIONS SHALL PROTRUDE OUT A MINIMUM OF 18 INCHES FROM THE SLOPE SO LOCALIZED SLOUGHING WILL NOT BLOCK THE END SECTION AFTER BEING INSTALLED.

H. CAST-IN-PLACE CONCRETE

1. UNLESS OTHERWISE SPECIFIED, MATERIALS SHALL CONFORM TO THE FOLLOWING STANDARDS:

   PORTLAND CEMENT -

   CONFORM TO ASTM C150.

   CEMENT SHALL BE TYPE 1 OR TYPE II.

   ADMIXTURES -

   AIR-ENTRAINING AGENT SHALL CONFORM TO ASTM C260.

   NO ADMIXTURE EXCEPT AIR ENTRAINING AGENT MAY BE USED WITHOUT THE WRITTEN APPROVAL OF THE CONTRACT ADMINISTRATOR.

   ADMIXTURES USED IN THE WORK SHALL BE OF THE SAME COMPOSITION AS USED IN ESTABLISHING THE REQUIRED CONCRETE MIX DESIGN.

   IN NO CASE WILL ADMIXTURES CONTAINING CHLORIDE SALTS BE ALLOWED TO BE USED IN CONJUNCTION WITH GALVANIZED METAL DECK, OR POST-TENSIONED/PRE-STRESSED CONCRETE.

   WATER -

   MIXING WATER FOR CONCRETE SHALL CONFORM TO THE REQUIREMENTS FOR WATER SPECIFIED IN ASTM C94.

   FINE AND COARSE AGGREGATE-

   CONFORM TO ASTM C33.

   STANDARD WEIGHT AGGREGATE SHALL BE USED FOR ALL CONCRETE.

   USE LARGEST PRACTICAL AGGREGATE SIZED FOR EACH CONDITION.

   MAXIMUM SIZE SHALL NOT EXCEED-

   3/4 THE CLEAR DISTANCE BETWEEN REINFORCING BARS.

   1/5 THE NARROWEST DIMENSION BETWEEN SIDES OF FORMS.

   1/3 THE DEPTH OF SLABS.

   CURING MATERIALS -

   PLASTIC FILM: MEET REQUIREMENTS OF C171, MINIMUM THICKNESS OF 0.0040 IN. (.10MM).

   REINFORCED PAPER: MEET REQUIREMENTS OF ASTM C171.

   LIQUID MEMBRANE-FORMING CURING COMPOUND: MEET REQUIREMENTS OF ASTM C309 WHEN TESTED AT THE RATE OF COVERAGE TO BE USED ON THE JOB.

   CONTROL JOINT MATERIAL: PREFORMED PLASTIC OR METAL.

   CONSTRUCTION JOINT MATERIAL: PREFORMED METAL KEYED JOINT.

   REINFORCEMENT-

   COMPLY WITH THE FOLLOWING AS MINIMUMS:

   A. BARS: ASTM A615, GRADE 60 (SI) UNLESS OTHERWISE SHOWN ON THE DRAWINGS, USING DEFORMED BARS FOR NUMBER 3 AND LARGER;

   B. WELDED WIRE FABRIC: ASTM A185.

   C. BENDING: ACI 318.

   CONCRETE -

   READY-MIXED CONCRETE SHALL BE MIXED AND DELIVERED IN ACCORDANCE WITH ASTM C94.

   PROVIDE CONCRETE FOR FLOOR SLABS ON GRADE WITH A 28-DAY COMPRESSIVE STRENGTH: 5,000 PSI.

   PROVIDE CONCRETE FOR ALL APPLICATIONS EXCEPT FLOOR SLABS ON GRADE WITH A 28 DAY COMPRESSIVE STRENGTH: 4,000 PSI.

   CONCRETE TO BE USED IN UNHEATED OR EXTERIOR APPLICATIONS SHALL BE AIR-ENTRAINED TO CONFORM WITH THE REQUIREMENTS OF TABLE 4.6.1, ACI 318.

   CONSISTENCY:

   WATER CONTENT: NOT TO EXCEED AMOUNT SPECIFIED BY MIX DESIGN.

   MAXIMUM SLUMP: UNLESS OTHERWISE PERMITTED OR SPECIFIED, THE CONCRETE SHALL BE PROPORTIONED AND PRODUCED TO HAVE A SLUMP OF 4 INCHES OR LESS.

2. UNLESS OTHERWISE SPECIFIED INSTALLATION SHALL CONFORM TO THE FOLLOWING STANDARDS:

   CONVEYING AND PLACING CONCRETE -

   CONFORM TO ACI 304.

   CONSOLIDATING CONCRETE -

   CONFORM TO ACI 304 AND ACI 309.

   COMPACT ALL CONCRETE BY MEANS OF VIBRATION, SPADING, RODDING OR FORKING.

   SLABS -

   CONFORM TO ACI 302.1.

   PLACE AND CONSOLIDATE CONCRETE AS SPECIFIED IN SECTIONS 3.02 AND 3.03, RESPECTIVELY.

   PLACE ISOLATION AND CONTRACTION (CONTROL) JOINTS WHERE INDICATED ON THE PLANS.

   CONCRETE CURING -

   CONFORM TO THE REQUIREMENTS OF ACI 308.

   WATER CURING:

   PONDING OR IMMERSION.

   FOG SPRAY OR SPRINKLING.

   USE OF SEALING MATERIALS:

   PLASTIC FILM.

   WATERPROOF PAPER.

   LIQUID MEMBRANE FORMING CURING COMPOUNDS.

   DURATION OF CURING -

   CURING PROCESS SHALL CONTINUE FOR SEVEN DAYS, MINIMUM, OR AS OTHERWISE STATED BY THE CONTRACT DOCUMENTS.

   FOLLOW SPECIFIC REQUIREMENTS FOR THE CURING OF DIFFERENT TYPES OF CONSTRUCTION, AS OUTLINED IN ACI 308.

3. UNLESS OTHERWISE SPECIFIED, TESTING SHALL CONFORM TO THE FOLLOWING STANDARDS:

   SAMPLING -

   SAMPLES OF FRESH CONCRETE SHALL BE TAKEN IN ACCORDANCE WITH ASTM C172.

   TWO SETS OF 3 TEST SPECIMEN EACH SHALL BE TAKEN FOR EACH 50 CU. YD. OR FRACTION THEREOF FOR EACH DAY'S CONCRETE PLACEMENT, WHICHEVER IS LESS. SPECIMEN SHALL BE TAKEN FROM EACH SAMPLE IN ACCORDANCE WITH ASTM C31.

   STRENGTH TEST -

   PERFORM IN ACCORDANCE WITH ASTM C39.

   BREAK ONE SET OF CYLINDERS AT 7 DAYS AND THE REMAINING SET AT 28 DAYS.

   SLUMP TEST -

   IN ACCORDANCE WITH ASTM C143.

   ON EACH TRUCKLOAD OF CONCRETE.

   AIR CONTENT -

   DETERMINE AIR CONTENT IN ACCORDANCE WITH EITHER:

   ASTM C231 (PRESSURE METHOD).

   ASTM C173 (VOLUMETRIC METHOD).

   ASTM C138 (GRAVIMETRIC METHOD).

NO.	DATE	CLASS REV.	REVISIONS	DWG.	DES.	CHKD.	REQ. GRP.	REQ. D.O.	ENG. GRP.	ENG. D.O.

Pan Am World Services, Inc.
LABORATORY SERVICES DIVISION

PONDS/LAGOONS CONVERSION

CIVIL: NOTES

BLDG. WA-158 TA-46

DRAWN	M. SHUMATE
CHECKED	J. LOPEZ
DESIGN	S. DONAHUE
CHECKED	
RELEASED	
DATE	6-26-87

SUBMITTED M. E. Smith RECOMMENDED APPROVED

Los Alamos — Los Alamos National Laboratory, Los Alamos, New Mexico 87545

SHEET C5 OF 6

CLASSIFICATION U REVIEWER DATE 7-1-87

REQUESTING DIV. AT-7 LAB JOB NO. 9074-46 DRAWING NO. ENG-C 45310 REV.

REQUESTING GROUP

THE STRENGTH OF THE CONCRETE SHALL BE ACCEPTABLE PROVIDED THE FOLLOWING CRITERIA ARE MET-

THE AVERAGE OF ALL SETS OF THREE CONSECUTIVE STRENGTH TESTS SHALL BE EQUAL TO OR EXCEED THE SPECIFIED 28-DAY COMPRESSIVE STRENGTH.

NO INDIVIDUAL TEST RESULT FALLS BELOW THE SPECIFIED 28-DAY COMPRESSIVE STRENGTH BY MORE THAN 500 PSI.

CONCRETE CONTAINING THE FOLLOWING DEFECTS SHALL BE REPAIRED OR REPLACED BY THE CONTRACTOR

NOT MEETING MINIMUM STRENGTH REQUIREMENTS.

NOT FORMED PROPERLY.

NOT TRUE, PLUMB, OR LEVEL.

CRACKS DETRIMENTAL TO PERFORMANCE OR APPEARANCE.

I. MANHOLES:

1. MANHOLES SHALL BE CIRCULAR REINFORCED CONCRETE PRE-CAST MANHOLE SECTIONS CONSTRUCTED ACCORDING TO ASTM C478. THEY SHALL HAVE CONCENTRIC PRE-CAST TOP WITH FACTORY CAST-IN MEANS FOR LIFTING AND SETTING. RUBBER JOINT GASKET COMPLYING WITH ASTMC 443 SHALL BE PROVIDED.

2. SHAPE THE INVERT CHANNELS TO BE SMOOTH AND SEMICIRCULAR, CONFORMING TO THE INSIDE OF THE ADJACENT SEWER SECTION.

3. MAKE CHANGES IN DIRECTION OF FLOW WITH A SMOOTH CURVE OF AS LARGE A RADIUS AS THE SIZE OF THE MANHOLE WILL PERMIT.

4. MAKE CHANGES IN SIZE AND GRADE OF CHANNELS SMOOTHLY AND EVENLY.

5. FORM THE INVERT CHANNELS DIRECTLY IN THE CONCRETE OF THE MANHOLE BASE, WITH MORTAR, OR LAYING FULL SECTION SEWER PIPE THROUGH THE MANHOLE AND BREAKING OUT THE TOP HALF AFTER SURROUNDING CONCRETE HAS HARDENED.

6. SMOOTH THE FLOOR OF THE MANHOLE OUTSIDE THE CHANNELS, AND SLOPE TOWARD THE CHANNELS AT NOT LESS THAN 1" PER FOOT NOT MORE THAN 2" PER FOOT.

7. MANHOLE RUNGS SHALL BE INDIVIDUAL WALL-MOUNTED RUNG FABRICATED OF ALUMINUM, PLASTIC-COVERED STEEL, OR GALVANIZED STEEL. LADDER RUNGS TO MEET OSHA REQUIREMENTS 29 CFR, PART 1010.27. RUNGS SHALL BE SPACED AT 12" O.C. AND 16" WIDE COMPLYING WITH OSHA STANDARD 1910.

8. COMPLETELY FILL MORTAR JOINTS, AND LEAVE SMOOTH AND FREE FROM SURPLUS MORTAR ON THE INSIDE OF THE MANHOLE. MORTAR SHALL COMPLY WITH ASTM C270, TYPE M.

9. MANHOLE FRAMES AND COVER SHALL BE GRAY IRON CASTING, ASTM A48, CLASS WITH HOT ASPHALT VARNISH, FACTORY APPLIED COATING.

10. MANHOLE FRAMES AND COVERS SHALL BE SET 2" HIGHER THAN FINISHED GRADE.

11. COMPACTION AROUND FINISHED MANHOLE WILL COMPLY WITH SECTION 9, EARTHWORK AND GRADING.

J. PARSHALL FLUME:

1. USE 1" PARSHALL FLUME SUPPLIED BY CHARLIE NYLANDER, HSE-8, 665-0453.

2. USE CARE IN PLACING CONCRETE AROUND PARSHALL FLUME IN ORDER NOT TO DISTORT FLUME FROM ORIGINAL SHAPE.

3. THE FLUME CREST MUST BE LEVEL IN BOTH THE LONGITUDINAL AND TRANSVERSE DIRECTION.

4. THE FLOW METER SHALL BE SUPPLIED BY UWGW 667-6191 AND INSTALLED BY UTILITIES.

NO.	DATE	CLASS REV.	REVISIONS	DWG.	DES.	CHKD.	REQ. GRP.	REQ. D.O.	ENG. GRP.	ENG. D.O.

Pan Am World Services, Inc.
LABORATORY SERVICES DIVISION

PONDS/LAGOONS CONVERSION

CIVIL: NOTES

BLDG. TA -

DRAWN	M. SHUPTER
CHECKED	A. Lopez
DESIGN	S. DONAHUE
CHECKED	
RELEASED	D. VOLKMAN
DATE	6-26-87

SUBMITTED M. E. Smith
RECOMMENDED
APPROVED 8/1/88

Los Alamos — Los Alamos National Laboratory, Los Alamos, New Mexico 87545

SHEET C6 OF 6

CLASSIFICATION U REVIEWER DATE 7-1-87

REQUESTING DIV. AT-7 REQUESTING GROUP AT-DO

LAB JOB NO. 9074-46

DRAWING NO. ENG-C 45310

REV.