General

ENTERED

Los Alamos
NATIONAL LABORATORY
EST. 1943

Environmental Programs
P.O. Box 1663, MS M991
Los Alamos, New Mexico 87545
(505) 606-2337/FAX (505) 665-1812

National Nuclear Security Administration
Los Alamos Site Office, MS A316
Environmental Restoration Program
Los Alamos, New Mexico 87544
(505) 667-4255/FAX (505) 606-2132

Date: OCT 12 2012
Refer To: EP2012-0225

John Kieling, Bureau Chief
Hazardous Waste Bureau
New Mexico Environment Department
2905 Rodeo Park Drive East, Building 1
Santa Fe, NM 87505-6303

Subject: Submittal of the ECORISK Database, Release 3.1

Dear Mr. Kieling:

Enclosed please find two compact discs (CDs) containing the updates to Los Alamos National Laboratory's (the Laboratory's) ECORISK Database. The Environmental Program maintains and updates the database to ensure that the ecological screening levels (ESLs) used to assess potential ecological risk at sites is representative and current.

It should be noted that the database and the associated files are now available for download online at http://www.lanl.gov/community-environment/environmental-stewardship/protection/eco-risk-assessment.php on the external Laboratory web. Please be aware that to open the database, the user must download it from CD to a computer. Trying to open the database directly from CD will not work. Downloading from the web is not an issue. Also, all files must be in the same directory for the links between documents to work. The reports submitted to the New Mexico Environment Department Hazardous Waste Bureau by the Laboratory will use the ESLs presented in this release starting in October 2012.

If you have any questions, please contact Richard Mirenda at (505) 665-6953 or rmirenda@lanl.gov or David Rhodes at (505) 665-5325 (david.rhodes@nnsa.doe.gov).

Sincerely,

Jeff Mousseau, Associate Director
Environmental Programs
Los Alamos National Laboratory

Sincerely,

Peter Maggiore, Assistant Manager
Environmental Projects Office
Los Alamos Site Office

35535

JM/PM/DN/RM:sm

Enclosures: Two CDs containing ECORISK Database, Release 3.1 (LA-UR-12-24548)

Cy: Laurie King, EPA Region 6, Dallas, TX
Steven Rydeen, San Ildefonso Pueblo
Joe Chavarria, Santa Clara Pueblo
Steve Yanicak, NMED-DOE-OB, MS M894
Tom Skibitski, NMED-OB (date-stamped letter emailed)
Annette Russell, DOE-LASO (date-stamped letter emailed)
David Rhodes, DOE-LASO (date-stamped letter emailed)
Rich Mirenda, EP-ET (date-stamped letter emailed)
Debbie Nevergold, EP-ET (date-stamped letter emailed)
Jeff Mousseau, ADEP (date-stamped letter emailed)
Wendy Swanson, EP-BPS, MS M992
Public Reading Room, MS M992 (hard copy)
RPF (electronic copy)

Environmental Programs
Engineering and Technology Division
P.O. Box 1663, MS M992
Los Alamos, New Mexico 87545
505-605-0607/Fax 505-606-0503

October 1, 2012

To Whom It May Concern:

You have downloaded files for one of the three file options for the Los Alamos National Laboratory (LANL) ECORISK Database Release 3.1 (October 2012). If you received a CD copy of the database, you automatically have the contents in Option 1, and you need to copy the files to your computer and uncheck the read only property of the database file for the application to work.

Option 1 – Cover Letter, Database, Linked Files and TRV Methods
Option 2 – Cover Letter and Database
Option 3 – Cover Letter, Linked Files and TRV Methods

This letter provides file descriptions, data issues, interface issues, other issues, and contact information for the current release of the database.

Database Files:

- **CoverLetterR3.1.pdf**: The cover letter you are currently reading.
- **ECORISK_R3.1a.MDB**: A Microsoft Office Access file that is the ECORISK Database Release 3.1. If you received a CD copy of the database, make sure the read only property of this file is not checked for the application to work. Also, if you open the file with the 2003 or previous version of Microsoft Office Access, you will encounter the error message in the screen snapshot presented below. Press “OK” and continue. Functionality of the database will remain intact. The database runs optimally in Microsoft Office Access 2007 or 2010.

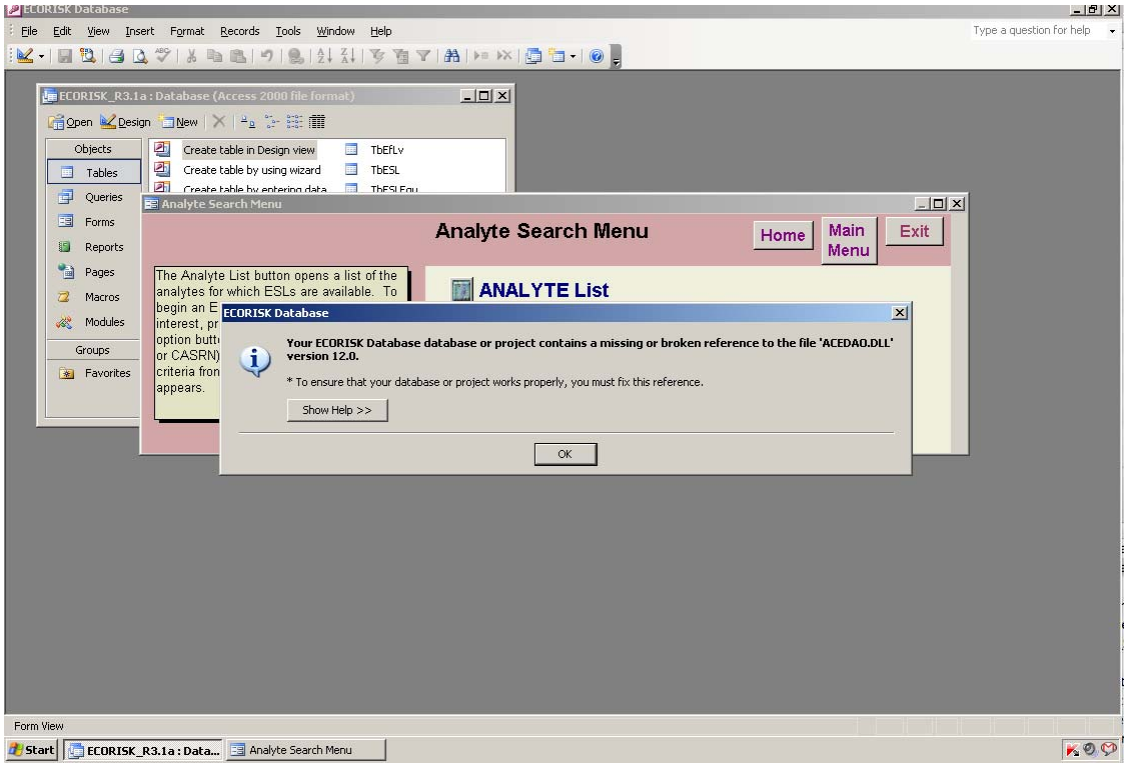

Linked Files and TRV Methods:

- **CoverLetterR3.1.pdf**: The cover letter you are currently reading.
- **ESLHistorySummary2012.pdf**: A document describing all LANL Ecological Screening Level (ESL) changes since the beta release of the ECORISK Database to the latest release. This file can be accessed from within the database on the 'Main Menu' screen under the 'Supplemental Reports' section. *Note: the functionality of hyperlinks in this document to external files was lost when converted from Microsoft Word to pdf. The external documents are included with this download/CD and can be opened individually. External website links can be accessed by copying and pasting the link into your browser.*
- **ESLs_R3.1.xlsx**: A document containing all ESLs from the ECORISK Database Release 3.1. This file can be accessed from within the database on the 'Main Menu' screen under the 'Supplemental Reports' section.
- **GMMTRVDerivationMethods090104b.pdf**: A document with explanations of the content of Toxicity Reference Value (TRV) Summary Reports associated with Geometric Mean (GMM) TRVs derived by LANL based on reviews of primary toxicity studies. This file can be accessed from within the database on the 'Main Menu' screen under the 'Supplemental Reports' section.
- **TRVs_Methods_LANL&EcoSSLData.pdf**: A document that explains the methods used to derive TRVs for PAHs and DDT and metabolites using both US Environmental Protection Agency (EPA) Ecological Soil Screening Level (Eco-SSL) and LANL data. This file can be accessed from within the database on the 'Main Menu' screen under the 'Supplemental Reports' section.
- **TRV_Dev_Methods_091710a.pdf:** A document that explains the methods used to identify/derive TRVs at LANL. This file can be accessed from within the database on the 'Main Menu' screen under the 'Supplemental Reports' section. This file can also be accessed externally from the download/CD folder.
- **AppA_TRV_Dev_Methods_091710a.pdf:** A document that is the appendix to TRV_Dev_Methods_090910a.pdf. This file can be accessed from within the database on the 'Main Menu' screen under the 'Supplemental Reports' section. This file can also be accessed externally from the download/CD folder.

Data Issues:
In this release of the database, LOAEL/LOEC-based water and sediment TRVs and ESLs were added for all chemicals for all receptors in the database where toxicity data was available to do so. NOAEL/NOEC-based TRV/ESL updates for water and sediment for birds and mammals were also made as necessary based on a quality assurance review of the data. In addition to the quality assurance review of the data, a literature search was performed for the aquatic community organism toxicity data for water and sediment ESLs for all chemicals, in order to identify more suitable data. LANL's Screening Level Ecological Risk Assessment (SLERA) methods, revision 3 (LA-UR-12-24152, ER ID 226715), which is forthcoming (in October) presents the details of the data sources utilized to update the aquatic ESLs.

Please refer to the ESL History Summary Report (ESLHistorySummary2012.pdf) for a synopsis of the changes made to the ECORISK Database since the last release and over the years. This file can be accessed from within the database on the 'Main Menu' screen under the 'Supplemental Reports' section. Please refer to the 'What's New' screen in the database for specific details on value changes.

Interface Updates/Issues:

- Updated water and sediment ESL derivation screens to be current with revision 3 of the SLERA.

Other Issues:
This database is a work in progress and although the data within it have been extensively reviewed, it is advised that you verify the data before use by referring to the actual references cited.

Contact Information:
Please contact Richard Mirenda at rmirenda@lanl.gov if you have any trouble with your copy of the database or if you have any questions and/or comments about the database. In addition, if you require or prefer a CD of the database, please contact Dr. Mirenda and a CD will be mailed to you.

Thank you for your interest in the database.

The ECORISK Database Team

Los Alamos National Laboratory

ECORISK Database Release 3.1 (October 2012)

ESL History Summary by ECORISK Database Release*

**** If you have a specific question(s) that this document does not address adequately, you may contact the database manager for additional help answering your question(s).***

Table 1. ESL Changes by ECORISK Database Release
- **October 1998 – Beta Release**
- **June 1999 – Release 1.0**
- **April 2000 – Release 1.1**
- **September 2000 – Release 1.2**
- **September 2001 – Release 1.3**
- **March 2002 – Release 1.4**
- **September 2002 – Release 1.5**
- **November 2003 – Release 2.0**
- **September 2004 – Release 2.1**
- **September 2005 – Release 2.2**
- **October 2008 – Release 2.3**
- **December 2009 – Release 2.4**
- **October 2010 – Release 2.5**
- **October 2011 – Release 3.0**
- **October 2012 – Release 3.1**

Table 2. Beta Release (October 1998) List of Soil ESLs for Bird Receptors
Table 3. Beta Release (October 1998) List of Soil ESLs for Mammalian Receptors
Table 4. Beta Release (October 1998) List of Soil ESLs for Earthworm Receptor
Table 5. Beta Release (October 1998) List of Soil ESLs for Generic Plant Receptor
Table 6. Beta Release (October 1998) List of Sediment and Water ESLs for Aquatic Community Organism Receptors
References

Tables

Table 1. ESL Changes by Ecorisk Database Release

Ecorisk Database Release	ESL Changes

Table 1. ESL Changes by Ecorisk Database Release

Ecorisk Database Release	ESL Changes
October 1998 – Beta Release	Original ESL models were as follows: Soil ESLs for Bird Receptors: American kestrel (Avian intermediate carnivore), American kestrel (Avian top carnivore), American robin (Avian insectivore) for 46 non-radionuclides and 18 radionuclides (See Table 2). Soil ESLs for Mammalian Receptors: Deer mouse (Mammalian omnivore), Desert cottontail (Mammalian herbivore), Red fox (Mammalian top carnivore), Vagrant shrew (Mammalian insectivore) for 102 non-radionuclides and 18 radionuclides (See Table 3). Soil ESLs for Invertebrate Receptor: Earthworm (Soil-dwelling invertebrate) for 37 non-radionuclides and 18 radionuclides (See Table 4). Soil ESLs for Plant Receptor: Generic plant (Terrestrial autotroph - producer) for 41 non-radionuclides and 18 radionuclides (See Table 5). Sediment and Water ESLs for 12 radionuclides for Aquatic Community Organism Receptors: Aquatic snails (Aquatic herbivore - grazer), Daphnids (Aquatic omnivore/ herbivore), Fish (Aquatic intermediate carnivore), and Algae (Aquatic autotroph – producer). (See Table 6). BACK TO TOP
June 1999 – Release 1.0	Addition of sediment ESLs for 19 radionuclides and or 49 non-radionuclides for the new bird receptor, Violet-green Swallow (Avian aerial insectivore). Addition of sediment ESLs for 19 radionuclides and or 106 non-radionuclides for the new Mammal receptor, Occult little brown myotis bat (Mammalian aerial insectivore). Addition of 85 sediment ESLs for non-radionuclides ESLs for the new aquatic community organism receptor. Addition of 7 radionuclides (Cesium-134, Cobalt-60, Europium-152, Radium-228, Sodium-22, Thorium-228, Thorium-230) for sediment and water for aquatic community organism receptors. Addition of non-radionuclide and radionuclide ESLs (19 rad, 48 non-rad) for soil for the new Bird receptors, American robin (Avian omnivore) and American robin

Table 1. ESL Changes by Ecorisk Database Release

Ecorisk Database Release	ESL Changes
	(Avian herbivore). Addition of non-radionuclide and radionuclide ESLs for water for all bird (19 rad, 48 non-rad) and mammal (19 rad, 106 non-rad) receptors. Addition of 3 ESLs for soil for Boron, Fluoride and Radium-228 for all applicable bird receptors. Addition of 3 ESLs for soil for Boron, Fluoride, Strontium (stable), Dichlorobenzene[1,4-], and Radium-228 for all applicable mammal receptors. Addition of 2 ESLs for soil for Trinitrotoluene[2,4,6-], and Radium-228 for the earthworm receptor. Addition of 3 ESLs for soil for Amino-2, 6-dinitrotoluene[4-], Boron, and Radium-228 for the generic plant receptor. Numerous ESL updates. Documentation of specific reasons for updates not available at this time. General documentation of reasons for ESL updates indicated that the radionuclide ESL models underwent extensive revisions and the non-radionuclide ESLs were multiplied by a factor of 0.3 per the recommendation of NMED. BACK TO TOP

Table 1. ESL Changes by Ecorisk Database Release

Ecorisk Database Release	ESL Changes
April 2000 – Release 1.1	Addition of 5 ESLs for water for Tetrachlorodibenzodioxin[2,3,7,8-], Dinitrotoluene[2,6-], Fluoride, Pentachloronitrobenzene, and Dichloroethene[1,1-] for the aquatic community organism receptor. Addition of soil and water ESLs for Dinitrobenzene[1,3-] for all applicable bird receptors. Addition of a soil ESL for Dibenzofuran for the desert cottontail receptor. Deletion of sediment ESLs for Butanone[2-], Chloroform, Dichloroethane[1,2-], Dichloroethene[cis-1,2-], Dinitrotoluene[2,6-], and Nitrobenzene for the aquatic community organism receptor. The Chloroform ESL was deleted because the toxicity data it was based on was deemed unsuitable. Reasons for other deletions not available at this time. Deletion of water ESL for Dichloroethene[cis-1,2-] for the aquatic community organism. Reason for deletion not available at this time. Numerous ESL updates. Documentation of specific reasons for ESL updates is not available at his time. General reasons for ESL updates are described below. Some ESLs were updated based on reasons documented in the December 1999 Interim ESLs memorandum (Ref ID 1484) and included: 1) the 0.3 factor was removed from the non-radionuclide ESL equations, 2) a correction to the water ESLs to account for a units conversion problem was made (values were multiplied by 1000), 3) all ESL values were rounded down to two significant figures and 4) the aquatic community organism receptor ESL for chlordane was revised. Some ESLs were updated due to the availability of new PTSE derived CS TRVs to replace secondary data source TRVs in ESL calculations. PTSE CS TRVs derived included Amino-2,6-dinitrotoluene[4-]/ Plant, Amino-4,6-dinitrotoluene[2-]/ Plant, Boron/ Bird, /Mammal and /Plant; Chromium (total)/ Bird and /Mammal, Fluoride/ Bird and / Mammal, Manganese/ Bird, / Mammal and / Plant; Nitroglycerine/ Mammal, Strontium (stable)/ Mammal, Trinitrotoluene[2,4,6-]/ Earthworm, /Mammal and /Plant; Uranium/ Bird, / Mammal and / Plant; and Vanadium/ Bird and / Mammal. Some ESLs were updated due to quality assurance issues including correction of errors in ESL calculations/parameters, rounding of values or reporting of data.

Table 1. ESL Changes by Ecorisk Database Release

Ecorisk Database Release	ESL Changes
	BACK TO TOP

Table 1. ESL Changes by Ecorisk Database Release

Ecorisk Database Release	ESL Changes
September 2000 – Release 1.2	Addition of soil, sediment and water ESLs for Dichloroethane[1,2-] for all applicable bird and mammal receptors because new PTSE derived TRVs were available. Addition of soil, sediment and water ESLs for Lead-210, Neptunium-237, Thorium-229, Uranium-233, and Uranium-236 for all applicable bird, mammal, earthworm, generic plant and aquatic community organism receptors. Addition of soil ESLs for HMX and RDX for the earthworm receptor. Reason for addition not available at this time. Addition of a water ESL for Dinitrobenzene[1,3-] for the aquatic community organism receptor. Reason for addition not available at this time. Deletion of soil, sediment and water ESLs for Chloro-3-methylphenol[4-] for all applicable bird, mammal, and aquatic community organism receptors. Reasons for deletions not available at this time. Deletion of soil, sediment and water ESLs for Tetrachloroethane[1,1,2,2-] for all applicable mammal, and aquatic community organism receptors. Reasons for deletions not available at this time. Deletion of sediment ESLs for Dinitrobenzene[1,3-], Iron, Polychlorinated Biphenyls, Dimethyl Phthalate, and Phenol for the aquatic community organism receptor. Deletion of water ESLs for Calcium, Nitrate (expressed as NO3), and Dichloroethene[1,1-] for the aquatic community organism receptor. Reasons for deletions not available at this time. Deletion of the soil ESL or Dibenzofuran for the desert cottontail receptor. Reason for deletion not available at this time. Numerous ESL updates. Some ESLs were updated because new PTSE derived CS TRVs were available to replace secondary data source TRVs. PTSE CS TRVs available included Acetone/Bird, Barium Bird, Barium/Mammal, Barium/Plant, HMX/Invertebrate, HMX/Mammal, Lead/Mammal, Lead/Bird, Lead/Invertebrate, Lead/Plant, RDX/Invertebrate, RDX/Mammal, Silver/Bird, Silver/Plant,1,3,5-Trinitrobenzene/ Mammal, Thallium/Plant, Zinc/Bird, Zinc Invertebrate.

Table 1. ESL Changes by Ecorisk Database Release

Ecorisk Database Release	ESL Changes
	Other ESLs were updated for quality assurance issues including correction of errors in ESL calculations/parameters, rounding of values or reporting of data. BACK TO TOP

Table 1. ESL Changes by Ecorisk Database Release

Ecorisk Database Release	ESL Changes
September 2001 – Release 1.3	Addition of soil ESL for Chromium (total) for the earthworm receptor due to the availability of a new internally approved secondary data source TRV. Addition of soil ESL for DDT[4,4'-] for the generic plant receptor due to the availability of a new internally approved secondary data source TRV. Addition of water ESL for Dichloroethene[1,1-] for the aquatic community organism receptor due to the availability of a new internally approved secondary data source TRV. Numerous ESL updates. Some ESLs were updated because new PTSE derived CS TRVs were available to replace secondary data source TRVs. PTSE CS TRVs available included DDE[4,4'-]/Bird, DDE[4,4'-]/Mammal, DDT[4,4'-]/Bird, DDT[4,4'-]/Mammal, DDT[4,4'-]/Plant, Aroclor-1016, Aroclor-1242, Aroclor-1248, Aroclor-1254 and Aroclor-1260/Mammal; Aroclor-1242, Aroclor-1248, Aroclor-1254 and Aroclor-1260/Bird; and Aroclor-1254/Plant. Other ESLs were updated for quality assurance issues including correction of errors in ESL calculations/parameters, rounding of values or reporting of data. BACK TO TOP
March 2002 – Release 1.4	Numerous ESL updates. Radionuclide ESLs, except Tritium, were updated due to revision of TF_plant and TF_invert from a dry weight basis to a fresh weight basis assuming 85% and 61% moisture content of plant and invertebrate diets, respectively (Ref ID 0561). This revision was required for units to cancel correctly in the ESL model equations. Radionuclide ESLs for Tritium were updated due to revision of TF_plant and TF_invert to assume equilibrium between the tritium in soil moisture and tissue waters. The value is calculated by dividing the moisture in tissues by the moisture in soil where 61% moisture content of invertebrates is based on beetles (Ref ID 0561, Table 4-1, p. 4-13) and 85% moisture content of plant material is based on leaves (Ref ID 0561, Table 4-2, p.4-14) and soil moisture of 10% is based on an average soil moisture found in the Los Alamos area. This revision was required for units to cancel correctly in the ESL model equations.

Table 1. ESL Changes by Ecorisk Database Release

Ecorisk Database Release	ESL Changes
	Radionuclide ESLs were also updated due to the revision of TF_flesh, which was revised because it is calculated from TF_plant and TF_invert, which were revised as explained above. This revision was required for units to cancel correctly in the ESL model equations. Radionuclide ESLs were also update due to the revision of all receptor intake rates from a dry weight basis to a fresh weight basis where the moisture content of invertebrates is assumed to be 61% (beetles (Ref ID 0561, Table 4-1, p. 4-13)), of plant materials is assumed to be 85% (leaves (Ref ID 0561, Table 4-2, p.4-14)), and flesh is assumed to be 68% (mammals - mice, voles, rabbits (Ref ID 0561,Table 4-1, p. 4-13). This revision was required for units to cancel correctly in the ESL model equations. Radionuclide ESLs were also updated due to the replacement of TF_beef with TF_blood in ESL models. TF(blood) is calculated by multiplying TF(beef) by I(food) or in the case of water intake, I(water). TF(blood) is required in all radionuclide ESL models for wildlife, and TF(beef) was used as a surrogate measure to estimate body burdens for internal dose calculations. TF(beef) has been replaced by TF(blood) in all these models so that the units in these models cancel properly. Internal dose calculations require a TF that models the transfer of radionuclides from food to blood. Other reasons for ESL updates include the rounding of ESL model parameters to 3 significant digits for reporting consistency as well addressing quality assurance issues. BACK TO TOP

Table 1. ESL Changes by Ecorisk Database Release

Ecorisk Database Release	ESL Changes
September 2002 – Release 1.5	Addition of soil, sediment and water ESLs for Trinitrotoluene[2,4,6-] for all applicable bird receptors due to the availability of a new PTSE derived CS TRV. Addition of soil ESL for Tetrachloroethene for the generic plant receptor due to the availability of a new PTSE derived CS TRV. Numerous ESL updates. Some ESLs were updated due to the availability of new PTSE derived CS TRVs to replace secondary data source TRVs in ESL calculations. Applicable PTSE TRVs derived included Tetrachlorodibenzodioxin[2,3,7,8-]/Bird, Mammal, and Plant; Antimony/Mammal, Cadmium/Bird, Mammal and Invertebrate; Copper/Bird and Mammal; Mercury (inorganic) /Bird, Mammal and Invertebrate; Nickel /Bird, Mammal and Invertebrate; Selenim/Invertebrate, Zinc/Mammal and Plant; Tetrachloroethene/Mammal, Trichloroethane[1,1,1-]/Mammal, Trichloroethene/Mammal, and Xylene (total)/Bird. Some ESLs were updated due to quality assurance issues for TRVs. Specific details of issues are not available at this time. BACK TO TOP
November 2003 – Release 2.0	Addition of soil ESLs for Antimony, Barium, and Beryllium for the earthworm receptor due to the availability of EPA Eco-SSL TRVs. Deletion of the soil ESL for Trinitrotoluene[2,4,6-] for the earthworm receptor because the toxicity data it was based on was deemed unsuitable. Deletion of soil ESLs for Aluminum for all applicable bird, mammal and generic plant receptors because EPA Eco-SSL uses a soil pH of less than 5.5 as an indicator of toxicity instead of an Aluminum soil concentration. Numerous ESL updates. Some ESLs were updated due to the availability of new PTSE derived GMM TRVs to replace PTSE derived CS TRVs or secondary data source TRVs in ESL calculations. Applicable PTSE GMM TRVs included, Aroclor-1016, Aroclor-1242, Aroclor-1254, Aroclor-1260, DDT[4,4'-], Di-n-Butyl Phthalate, Nickel, RDX, and Tetrachlorodibenzodioxin[2,3,7,8-] for food exposure for Mammals; Antimony, Cadmium, and Lead for drinking water exposure for Mammals; Aroclor-1260,

Table 1. ESL Changes by Ecorisk Database Release

Ecorisk Database Release	ESL Changes
	Barium, Boron, Copper, DDE[4,4'-], Nickel, and Zinc for food exposure for Birds; Aroclor-1254, Boron, and Di-n-Butyl Phthalate for soil exposure for Plants; and Zinc for soil exposure for Invertebrates. Some ESLs were updated due to the availability of EPA Eco-SSL TRVs to replace PTSE or secondary data source TRVs in ESL calculations. Applicable EPA Eco-SSL TRVs available included Antimony, Barium, Beryllium, Cadmium, Cobalt, Lead, and Dieldrin for food exposure for Mammals; Cadmium, Cobalt, Lead, and Dieldrin for food exposures for Birds; Antimony, Barium, Beryllium, Cadmium, and Lead for soil exposure for Invertebrates; and Cadmium, Cobalt, and Lead for soil exposure for Plants. Some ESLs were updated due to the availability of EPA NRWQC CCC TRVs to replace other secondary data source TRVs. Applicable EPA NRWQC CCC TRVs available included Selenium and Mercury (inorganic) for water exposure for the aquatic community organism receptor. Other ESLs were updated due to addressing data quality assurance issues or because the previously used toxicity data the ESLs were based on was deemed unsuitable and was revised appropriately to make it suitable. Specific details of issues are not available at this time. BACK TO TOP

Table 1. ESL Changes by Ecorisk Database Release

Ecorisk Database Release	ESL Changes
September 2004 – Release 2.1	A mammalian screening receptor used in soil and water ESL models for a mammalian insectivore in the database has changed. The vagrant shrew (*Sorex vagrans*) in New Mexico has been reclassified as the montane shrew, also known as the dusky shrew, (*Sorex monticolus*) by Eastern New Mexico University (see http://fwie.fw.vt.edu/states/nmex_main/species/050725.htm for more information). However, this the ESLs for the vagrant shrew are applicable to the montane shrew because the short-tailed shrew data that was used as surrogates for parameters in the vagrant shrew ESL models are applicable for the montane shrew as a mammalian insectivore. As a result, only the ESL screening receptor common and scientific name has changed. Addition of soil ESL for HMX for the generic plant receptor due to the availability of a new Tier 2 TRV (PTSE GMM TRV). Addition of soil ESL for Trinitrotoluene[2,4,6-] for the earthworm receptor due to the availability of a new Tier 3 TRV (PTSE CS TRV). Addition of sediment and soil ESLs for RDX for all applicable bird receptors due to the availability of a new Tier 2 TRV (PTSE GMM TRV). Addition of sediment, soil and water ESLs for Thallium for all applicable bird receptors due to the availability of a newly approved Tier 4 TRV (secondary data source CS TRV). Addition of 16 air ESLs for Acetone, Benzene, Carbon, Tetrachloride, Chloroform, Chloromethane, Dichlorodifluoromethane, Dichloroethane[1,1-], Dichloroethane[1,2-], Dichloroethene[1,1-], Methylene Chloride, Tetrachloroethene, Toluene, Trichloroethane[1,1,1-], Trichloroethene, Trichlorofluoromethane, and Xylene (Total) for the new Mammal receptor, Botta's Pocket Gopher (Burrowing mammal). These ESL were added due to the availability of new Tier 2 TRVs (PTSE GMM TRVs). Deletion of sediment, soil and water ESLs for Tetrachlorodibenzodioxin[2,3,7,8-] for all applicable bird receptors due to discontinued use of previous Tier 3 (CS) TRV that was deemed unsuitable because it was based on an non-oral exposure (i.p. injection). Numerous ESL updates. Naphthalene soil and sediment ESLs for all applicable bird receptors updated due to the previous Tier 4 TRV (secondary data source CS TRV) being replaced by a new Tier 2 TRV (PTSE GMM TRV).

Table 1. ESL Changes by Ecorisk Database Release

Ecorisk Database Release	ESL Changes
	Chromium (+6) soil, sediment and water ESLs for all applicable bird receptors updated due to the previous Tier 4 (CS) TRV being replaced by a new Tier 3 TRV (PTSE CS TRV). Chromium (total) soil, sediment and water ESLs are based on Chromium (+6) toxicity data and because the oral chromium (+6) TRV for birds was updated (see previous paragraph), the corresponding chromium (total) ESLs for birds were updated accordingly based on the new chromium (+6) data. HMX soil ESL for the earthworm receptor updated due to the previous Tier 3 TRV (PTSE CS TRV) being replaced by a new Tier 2 TRV (PTSE GMM TRV). RDX soil ESL for the earthworm receptor updated due to the previous Tier 3 TRV (PTSE CS TRV) being replaced by a new Tier 3 TRV (PTSE CS TRV). Trinitrotoluene[2,4,6-] soil ESL for the generic plant receptor updated due to the Tier 3 TRV (PTSE CS TRV) being replaced by a new Tier 2 TRV (PTSE GMM TRV). Plutonium-241 water ESL for the vagrant shrew receptor updated due to the revision of the ESL model parameter, TF_blood, which was corrected for a previous rounding error. All ESL for radionuclides in sediment for aquatic receptors were revised based on the guidance of DOE-STD-1153-2002 to not include internal dose for aquatic organisms exposed to radionuclides in sediment. The ESL model parameter, DCF_int_fw, was set to 0 to incorporate this guidance. BACK TO TOP

Table 1. ESL Changes by Ecorisk Database Release

Ecorisk Database Release	ESL Changes
September 2005 – Release 2.2	**New ESLs** Sediment and water ESLs for iron for aquatic community organisms due to this analyte being added as a new LANL exposure concern. Water ESLs for perchlorate ion for mammalian and avian receptors due to development of a New Tier 2 (GMM) TRV and New Tier 3 (CS) TRV, respectively. Soil and sediment ESLs for mammalian receptors for BHC[alpha-] due to the development of a New Tier 3 (CS) TRV. Soil ESLs for the earthworm for fluoranthene, phenanthrene and pyrene due to the development of New Tier 3 (CS) TRVs. Soil ESL for the generic plant for naphthalene due to the development of a New Tier 3 (CS) TRV. **ESL Updates** Revision of various Transfer Factors (TF) for soil-to-plant and soil-to invertebrate for both inorganic and organic analytes based on the most current EPA EcoSSL bioaccumulation data or models (Ref ID 1401), which resulted in the revision of the calculated soil-to-flesh TF and as well as numerous ESL updates. Inorganic TFs were replaced with more comprehensive empirical values, median values from the empirical data set. Organic TFs for soil-to-invertebrates were revised based on a more appropriate bioaccumulation model (BAFww = (Kww/Kd)/0.16 where logKww = 0.87*logKow-2.0 and Kd = foc*Koc where foc is 1%, or 0.01.) cited in the 2005 EPA EcoSSL bioaccumulation data report (REF ID1401, Table 5 and dry to fresh weight ratio (0.16) for earthworms from Ref ID 1574), except for Dieldrin, DDT[4,4'-], and DDE[4,4'-], which were based on the median of comprehensive empirical data sets. Organic TFs for soil-to-plants were revised based on a more appropriate bioaccumulation model (BAF=10^(-0.4057LogKow+1.781) r2 =0.3226, n=228,p<0.0001) cited in the 2005 EPA EcoSSL bioaccumulation data report (REF ID1401). Furthermore, various TRVs were also updated and this contributed to the ESL updates. TRV updates include replacement of: Tier 1 TRVs with new Tier 1 TRVs from EPA from EcoSSL 2005 data Tier 3 or 4 TRVs with new Tier 1 TRVs from EPA EcoSSL 2005 data Tier 3 or 4 TRVs with new Tier 2 TRVs Tier 3 TRVs with a more appropriate Tier 3 TRVs Below is a list of the 99 analytes updated grouped based on type of revisions* A.) TF

Table 1. ESL Changes by Ecorisk Database Release

Ecorisk Database Release	ESL Changes
	revisions only, B.) TF and TRV revisions, and C.) TRV revisions only. **Detailed information on changes available from the "What's New In this Release" screen in the Ecorisk Database - section Change Type, ESLs, Update).* **A.) TF REVISONS ONLY** **HIGH EXPLOSIVES/ Sediment and Soil ESLs** Amino-2,6-dinitrotoluene[4-] Amino-4,6-dinitrotoluene[2-] Dinitrobenzene[1,3-] Dinitrotoluene[2,4-] Dinitrotoluene[2,6-] HMX Nitroglycerine Nitrotoluene[2-] Nitrotoluene[3-] Nitrotoluene[4-] PETN RDX Tetryl Trinitrobenzene[1,3,5-] Trinitrotoluene[2,4,6-] **INORGANICS/ Sediment and Soil ESLs** Aluminum (sediment) Arsenic Barium Cadmium Chromium (total) Copper Manganese Mercury (inorganic) Nickel Selenium (soil) Silver Strontium (stable) Uranium Zinc **POLYAROMATIC HYDROCARBONS/ Sediment and Soil ESLs** Acenaphthene Acenaphthylene Anthracene Benzo(a)anthracene (soil) Benzo(a)pyrene (soil) Benzo(b)fluoranthene (soil) Benzo(g,h,i)perylene Benzo(k)fluoranthene (soil) Chrysene (soil) Dibenzo(a,h)anthracene (soil)

Table 1. ESL Changes by Ecorisk Database Release

Ecorisk Database Release	ESL Changes
	Fluoranthene
	Fluorene
	Indeno(1,2,3-cd)pyrene (soil)
	Methylnaphthalene[2-]
	Naphthalene
	Phenanthrene (soil)
	Pyrene
	POLYCHLORINATED BIPHENYLS/ Soil ESLs
	Aroclor-1016
	Aroclor-1242
	Aroclor-1248
	Aroclor-1254
	Aroclor-1260
	PESTICIDES/ Sediment and Soil ESLs
	BHC[beta-]
	BHC[gamma-]
	Chlordane[alpha-]
	Chlordane[gamma-]
	DDE[4,4'-]
	DDT[4,4'-]
	Dieldrin
	Endosulfan
	Endrin
	Heptachlor (soil)
	Kepone
	Methoxychlor[4,4'-]
	Toxaphene (Technical Grade)
	SEMI-VOLATILE ORGANIC COMPOUNDS/ Sediment and Soil ESLs
	Benzoic Acid
	Bis(2-ethylhexyl)phthalate
	Butyl Benzyl Phthalate
	Chlorobenzene
	Chlorophenol[2-]
	Dimethyl Phthalate
	Di-n-Butyl Phthalate
	Di-n-octylphthalate
	Nitrobenzene
	Pentachloronitrobenzene
	Phenol
	VOLATILE ORGANIC COMPOUNDS/ Sediment and Soil ESLs
	Acetone
	Benzene
	Butanone[2-]
	Chloroform
	Dichlorobenzene[1,4-]
	Dichloroethane[1,1-]
	Dichloroethane[1,2-]
	Dichloroethene[1,1-]
	Dichloroethene[cis/trans-1,2-]

Table 1. ESL Changes by Ecorisk Database Release

Ecorisk Database Release	ESL Changes
	Methylene Chloride Tetrachloroethene Toluene Trichlorobenzene[1,2,4-] Trichloroethane[1,1,1-] Trichloroethene Xylene (Total) **B.) TF REVISIONS & TRV REVISIONS** **INORGANICS/ Sediment and Soil ESLs** Antimony (sediment) Barium Beryllium Cadmium Chromium (total) Cobalt Lead Vanadium **PESTICIDES/ Sediment and Soil ESLs** DDT[4,4'-] Dieldrin **SEMI-VOLATILE ORGANIC COMPOUNDS/ Sediment and Soil ESLs** Pentachlorophenol **C.) TRV REVISIONS ONLY** **DIOXIN/FURANS/ Soil ESLs** Tetrachlorodibenzodioxin[2,3,7,8-] **INORGANICS/ Sediment, Soil and Water ESLs** Antimony (soil) Arsenic (soil) Barium (soil) Cadmium (soil) Chromium (total) (soil and water) Chromium(+6) Lead (soil) Vanadium (soil) **POLYAROMATIC HYDROCARBONS/ Sediment and Soil ESLs** Fluorene (soil) **SEMI-VOLATILE ORGANIC COMPOUNDS/ Sediment and Soil ESLs** Pentachlorophenol Other Changes: Documentation and value for DCF_int_fw for aquatic receptors (algae, aquatic snail, daphnid and generic fish) for water Rad ESL model. This change did not affect ESLs, it was only a documentation error after from the previous release that was made after ESLs had been calculated. Added TF_beef_fw for BHC[alpha-]. Needed to calculate ESL for this new

Table 1. ESL Changes by Ecorisk Database Release

Ecorisk Database Release	ESL Changes
	exposure concern. BACK TO TOP

Table 1. ESL Changes by Ecorisk Database Release

Ecorisk Database Release	ESL Changes
October 2008 – Release 2.3	**New ESLs** Soil and Sediment ESLs for DDD[4,4'-] [a], Diethyl Phthalate, Methyl-2-pentanone[4-], Methylphenol[2-], and Aldrin due to these analytes being added as a new LANL exposure concerns. Soil ESLs for Manganese and Anthracene [a] for the earthworm due to availability of New Tier 1 TRV and New Tier 2 (GMM) TRV, respectively. **ESL Updates** Revision of the equation used to calculate the Transfer Factor (TF) for soil-to-flesh for both inorganic and organic analytes, which resulted in the revision of the calculated soil-to-flesh TF and as well as numerous ESL updates. The equation is now: TF_flesh_dw equals TF_beef_fw * [I_foodcomposite_fw * MAX(TF_plant_dw * {1 - MC_plant}, TF_invert_dw * {1 - MC_invert}) + I_soilcomposite_dw]/ (1-MC_flesh) Previous equation: TF_flesh_dw equals TF_beef_fw * [I_foodcomposite_fw * If(TF_invert_dw > TF_plant_dw, TF_invert_dw * {1 - MC_invert}, TF_plant_dw * (1-MC_plant)) + I_soilcomposite_dw]/ (1-MC_flesh) Where: I_soilcomposite_dw is the maximum dry weight intake of soil (0.00281 kg-dry soil/d) for prey species (American robin, deer mouse, desert cottontail and shrew) of the red fox and American kestrel MAX is maximum MC_plant is the moisture content of plant matter, which is assumed to be 85% (leaves (Ref ID 0561, Table 4-2, p.4-14)) MC_invert is the moisture content of invertebrates, which is assumed to be 61% (beetles (Ref ID 0561, Table 4-1, p. 4-13)) MC_flesh is the moisture content of flesh, which is assumed to be 68% (mammals - mice, voles, rabbits and birds – passerines (Ref ID 0561, Table 4-1, p. 4-13) TF_beef_fw is the food to beef transfer factor (mg-COPC/kg-fresh beef per mg-COPC/d) Furthermore, various TRVs were also updated and this contributed to the ESL updates. TRV updates include replacement of: Tier 1 TRVs with new Tier 1 TRVs from EPA from EcoSSL 2005 data Tier 3 or 4 TRVs with new Tier 1 TRVs from EPA EcoSSL 2005 data Tier 3 or 4 TRVs with new Tier 2 TRVs

Table 1. ESL Changes by Ecorisk Database Release

Ecorisk Database Release	ESL Changes
	Tier 3 TRVs with a more appropriate Tier 3 TRVs Below is a list of the analytes updated grouped based on type of revisions* A.) TF revisions only, B.) TF and TRV revisions and C.) TRV revisions only. **Detailed information on changes available from the "What's New In this Release" screen in the Ecorisk Database - section Change Type, ESLs, Update).* **A.) TF REVISONS ONLY** **HIGH EXPLOSIVES** Nitrotoluene[3-] (soil) RDX (soil) **INORGANICSs** Barium (soil) Cyanide (total) (soil) **POLYAROMATIC HYDROCARBONS** Benzo(a)anthracene (soil) Chrysene (soil) **SEMI-VOLATILE ORGANIC COMPOUNDS** Carbazole (soil) **VOLATILE ORGANIC COMPOUNDS** Chloroform (soil) Dichloroethane[1,1-] (soil) **B.) TF REVISIONS & TRV REVISIONS** **NONE** **C.) TRV REVISIONS ONLY** **INORGANICS** Chromium(+6) (sediment, soil) Copper (sediment, soil) Manganese (sediment, soil) Nickel (sediment, soil) Selenium (sediment, soil) Silver (sediment, soil) Zinc (sediment, soil) **POLYAROMATIC HYDROCARBONS** [a] Benzo(a)pyrene (sediment, soil) Fluoranthene (soil) Fluorene (soil) Naphthalene (sediment, soil) Phenanthrene soil) Pyrene (soil) **PESTICIDES** [a] DDE[4,4'-] (sediment, soil) DDT[4,4'-] (sediment, soil)

Table 1. ESL Changes by Ecorisk Database Release

Ecorisk Database Release	ESL Changes
	[a] TRVs developed for PAHs and DDT and metabolites DDE and DDD were done according to the following methods: TRVs_Methods_LANL&EcoSSLData Other Changes: Updated documentation for Aluminum ESL for soil by removing an ESL value of > 5 and indicating in notes "pH dependent. Aluminum is identified as a COPC only at sites where the soil pH is less than 5.5. Added TF_plant_dw, TF_invert_dw, TF_beef_fw and TF_flesh_dw for DDD[4,4'-], Diethyl Phthalate, Methyl-2-pentanone[4-], Methylphenol[2-], and Aldrin. Needed to calculate ESLs for these new LANL exposure concerns. Updated interface screens:
	Brand new Anayte Search menu screen with concise instructions that shows menu for searching for ESLs by analyte and accessed via the updated Main Menu screen. Contains the same buttons that were originally on old Main Menu screen and leads to the same Analyte Search Result screens.
	Brand new Contact Information screen that shows point of contact information for Ecorisk Db. Accessed via a button on the updated Home screen.
	Updated Home screen to reduce clutter of information. Contains button to access contact information, ESL search menus and report menus, what's new in this release information, and a button to exit the Db.
	Updated Main Menu screen to reduce clutter of information. Contains button to new screens that show ESL search menus (by analyte or by screening receptor), and summary and custom report menus. Also contains buttons to see the existing screens for ESL radionuclide and non-radionuclide model information.
	Updated Custom Report Menu screen that now has a design similar to the other search menus (e.g., Screening Receptor Search menu) and concise instructions. Contains the same buttons that were on Old Main Menu screen. Accessed via the updated Main Menu screen.
	Updated Primary Toxicty Study (PTS) Description screen that now shows vertical scroll bars that were missing in some fields. Recommended update.
	Updated Primary Toxicity Value (PTV) Evaluation screen that now shows more information to aid in understanding better how the PTV confidence ratings are determined. More specifically, this form now shows Maximum weighted scores for the different exposure scenarios (i.e., bird or mammal, oral ingestion; mammal, inhalation; and plant or invertebrate). Recommended update.
	Brand new Screening Receptor Search menu screen with concise instructions that shows menu for searching for ESLs by screening receptor and accessed via the updated Main Menu screen. Contains the same buttons that were originally on old main Menu screen and leads to the same Receptor Search Result screens.
	Brand new Summary Reports Menu screen with concise instructions that shows menu for summary reports and accessed via the updated Main Menu Screen. Contains the same buttons that were originally on old main Menu screen but improved in presentation.

Table 1. ESL Changes by Ecorisk Database Release

Ecorisk Database Release	ESL Changes
	Updated Select TRV Summary Report Criteria screen in which redundancy was removed (the same sentence was repeated twice). Recommended update.
	Updated Weighting Factor Description screen that now explains in more detail what is done with the weighting factors and why. Recommended update.
	BACK TO TOP

Table 1. ESL Changes by Ecorisk Database Release

Ecorisk Database Release	ESL Changes
December 2009 – Release 2.4	In this release of the database, ESLs/TRVs were added for chemicals for which no toxicity data was previously available. Online toxicity databases were searched for relevant existing TRVs or for primary toxicity data and/or references from which TRVs could be derived for these chemicals (see EcoriskDbR2.4_ToxicityData_ResourceSummary_SoilESLs_112409.xls for details of search results). Of those 40 chemicals of concern, 11 chemicals now have LANL peer reviewed/ approved TRVs/ESLs incorporated into this release of the database, 5 chemicals have interim ESLs/ TRVs because LANL peer reviewed/ approved values could not be obtained in time for this release of the database (see Interim_SoilESLs_R2.4_111309.xls), 13 chemicals have surrogate ESLs/TRVs (see Interim_SoilESLs_R2.4_111309.xls) based on chemicals already in the database, and the remaining 12 chemicals still have no ESL at this time. Note – The sum of the numbers adds up to 41 instead of 40 because Hexanone[2-] has both an incorporated ESL (for birds) and an interim ESL (for mammals). Below is a summary of the ESLs/ TRVs incorporated into Release 2.4 of the Ecorisk Database, as well as other relevant data or interface changes. **New ESLs** Soil and Sediment ESLs for birds due to availability of new TRVs: • Molybdenum • Hexachlorobenzene • Hexanone[2-] Soil and Sediment ESLs for mammals due to availability of new TRVs: • Lithium • Carbon Disulfide • Hexachlorobenzene • Dichlorobenzene[1,2-] • Dichlorobenzene[1,3-] • Vinyl Chloride Soil ESL for earthworm due to availability of new TRVs: • Chloroaniline[4-] • Hexachlorobenzene • Styrene Soil ESL for plant due to availability of new TRVs: • Chloroaniline[4-] • Hexachlorobenzene • Styrene Alternative screening approach for Iron for plant based on EPA EcoSSL's report • See http://www.epa.gov/ecotox/ecossl/pdf/eco-ssl_iron.pdf Sediement ESL for aquatic community organism due to availability of a new

Table 1. ESL Changes by Ecorisk Database Release

Ecorisk Database Release	ESL Changes
	TRVs: • Molybdenum **ESL Updates** Soil ESLs for deer mouse, desert cottontail and red fox due to TF updates: • Methylphenol[2-] **New TRVs** Tier 2 (Geometric Mean) oral diet TRVs from LANL were developed with the PTSE Process for the following chemicals and receptor groups: • Lithium/ mammal Tier 3 (Critical Study) oral diet TRVs from LANL were developed with the PTSE Process for the following chemicals and receptor groups: • Hexanone[2-]/ bird Tier 4 (based on secondary data) oral diet TRVs from ORNL were identified for the following chemicals and receptor groups: • Lithium/ plant • Molybdenum/ plant • Molybdenum/ bird • Styrene/ earthworm • Vinyl Chloride/ mammal Tier 4 (based on secondary data) oral diet TRVs from EPA ECOTOX were identified for the following chemicals and receptor groups: • Carbon Disulfide/ mammal • Chloroaniline[4-]/ earthworm • Chloroaniline[4-]/ plant • Dichlorobenzene[1,2-]/ mammal • Dichlorobenzene[1,3-]/ mammal • Hexachlorobenzene/ bird • Hexachlorobenzene/ mammal • Hexachlorobenzene/ earthworm • Hexachlorobenzene/ plant • Styrene/ plant **TRV Updates** The use status of various TRVs changed for the following reasons: • Vinyl chloride/ mammal oral diet TRV records deleted due to availability of updated toxicity information for oral diet TRV from same data source (ORNL).

Table 1. ESL Changes by Ecorisk Database Release

Ecorisk Database Release	ESL Changes
	• Vinyl chloride/ mammal drinking water TRV no longer used because primary toxicity data is for oral diet exposure, which is no longer considered an appropriate TRV surrogate for a drinking water exposure. • Carbon Tetrachloride/ mammal oral TRVs no longer used because currently not an exposure concern for this exposure pathway. • Molybdenum/ aquatic community organism sediment TRV selected for use because this chemical is now a chemical of concern. **New TFs** All New TFs (except where noted otherwise) were acquired for the following chemicals because these chemicals are new exposure concerns: • Carbon Disulfide • Chloroaniline[4-] • Dichlorobenzene[1,2-] • Dichlorobenzene[1,3-] • Hexachlorobenzene • Hexanone[2-] • Styrene • Vinyl Chloride • Lithium (only TF_invert and TF_flesh) • Molybdenum (only TF_invert and TF_flesh) **TF Updates** TFs for the following chemicals were updated: • Methylphenol[2-] – all TFs updated due to availability of more appropriate data • Molybdenum – TF_beef and TF_plant updated due to availability of more appropriate data **Interface Updates** • Added “Other Reports” links to the “Menu” screen to allow access to other files on the Ecorisk Db from within the database interface including;

Table 1. ESL Changes by Ecorisk Database Release

Ecorisk Database Release	ESL Changes
October 2010 – Release 2.5	In this release of the database, ESLs/TRVs were added for chemicals for which no toxicity data was previously available. Online toxicity databases were searched for relevant existing TRVs or for primary toxicity data and/or references from which TRVs could be derived for x chemicals (see EcoriskDbR2.5_ToxicityData_ResourceSummary_SoilESLs_101310.xls for details of search results). In this release of the database, an additional 11 new chemicals now have LANL peer reviewed/ approved TRVs/ESLs incorporated into this release of the database, no chemicals have interim ESLs/ TRVs at this time, 13 chemicals have surrogate ESLs/TRVs (see Interim_SoilESLs_R2.5_101310.xls) based on chemicals already in the database, and the remaining 8 chemicals from the original data gap list still have no ESLs at this time. **New ESLs** Soil and Sediment ESLs for birds due to availability of new TRVs: • Benz(a)anthracene • Diphenylamine • Iodomethane • Pyrene Soil and Sediment ESLs for mammals due to availability of new TRVs: • Carbazole • Nitroaniline[2-] • Benzyl alcohol • Hexanone[2-] • Trichlorofluoromethane Soil ESL for plant due to availability of new TRVs: • Methylphenol[2-] • Methylphenol[3-] **ESL Updates** Water ESL for aquatic community organism due to retraction of previous TRV and replacement with available alternative TRV: • Beryllium **New TRVs** Tier 2 (Geometric Mean) oral diet TRVs from LANL were developed with the PTSE Process for the following chemicals and receptor groups: • Hexanone[2-]/Mammal • Trichlorofluoromethane/Mammal Tier 3 (Critical Study) oral diet TRVs from LANL were developed with the PTSE Process for the following chemicals and receptor groups:

Table 1. ESL Changes by Ecorisk Database Release

Ecorisk Database Release	ESL Changes
	• Benzyl alcohol/Mammal • Carbazole/Mammal • Nitroaniline[2-]/Mammal Tier 4 (based on secondary data) oral diet TRVs from identified for the following chemicals and receptor groups: • Diphenylamine/Bird • Iodomethane/Bird • Benz(a)anthracene/Bird • Pyrene/Bird • Methylphenol[2-]/Plant • Methylphenol[3-]/Plant **TRV Updates** The use status of various TRVs changed for the following reasons: • Beryllium/Aquatic community organism water TRV deleted due to retraction of value by publishing data source. TRV replaced with available alternative value. **New TFs** All New TFs (except where noted otherwise) were acquired for the following chemicals because these chemicals are new exposure concerns: • Benzyl alcohol • Diphenylamine • Iodomethane • Nitroanilin[2-] **TF Updates** TFs for the following chemicals were updated: • Carbazole – TF_beef updated due to availability of more appropriate data • Trichlorofluoromethane – TF_plant updated due to availability of more appropriate data **Interface Updates** None.

Table 1. ESL Changes by Ecorisk Database Release

Ecorisk Database Release	ESL Changes
October 2011 – Release 3.0	BACK TO TOP In this release of the database, LOAEL/LOEC-based food TRVs and soil ESLs were added for all chemicals in the database where toxicity data was available to do so. NOAEL/NOEC-based TRV/ESL updates were also made as necessary based on a quality assurance review of the data. **New NOAEL/NOEC-based ESLs** • No new values **NOAEL/NOEC-based ESL Updates** • Deletion of soil ESLs for plants due to retraction of previous TRV because toxicity data is under review: o Aldrin o Rdx o Tetryl o Lithium o Molybdenum • Deletion of soil ESLs for plants and earthworms due to retraction of previous TRV because toxicity data is under review: o Chromium (total) • Deletion of water ESLs for aquatic community organisms due to retraction of previous TRV because toxicity data is under review: o Chromium (+6) • Updates to soil, sediment and water ESLs for mammals due to the availability of a more relevant TRV: o Amino-2,6-dinitrotoluene[4-] o Amino-4,6-dinitrotoluene[2-] o Dimethyl Phthalate o Di-n-octylphthalate o Dinitrotoluene[2,4-] o Dinitrotoluene[2,6-] o Nitrobenzene o Nitrotoluene[2-] o Nitrotoluene[3-] o Nitrotoluene[4-] o Methylnaphthalene[2-] o PETN • Updates to soil and sediment ESLs for chromium (total) for birds and mammals because the TRV is now based on chromium (+3) toxicity data instead of chromium (+6) TRV multiplied by 7 because the former is the

Table 1. ESL Changes by Ecorisk Database Release

Ecorisk Database Release	ESL Changes

	predominant form in the environment for these two media.
	• Updates to water ESLs for chromium (total) for birds, mammals and aquatic community organisms because the TRV is now based on chromium (+6) toxicity data instead of chromium (+6) TRV multiplied by 7 because the former is the predominant form in the environment for these two media.
	• Update to sediment ESL for aquatic community organisms due to correction of existing TRV:
	  o Iron
	• Updates to soil and sediment ESLs for birds due to correction of existing TRV:
	  o Benzo(a)anthracene
	• Updates to soil and sediment ESLs for mammals due to correction of existing TRV:
	  o Carbazole
	• Updates to soil ESL for plants due to correction of existing TRV:
	  o Styrene
	Minimum ESL Updates
	• Lithium/soil due to retraction of plant TRV, which was the receptor with the minimum ESL in the previous release of the database. Montane shrew has the new minimum ESL.
	New NOAEL/NOEC-based TRVs
	• Bird and mammals/ food (Tier 1):
	  o Chromium (total)
	• Mammals/ food and water (Tier 4):
	  o Amino-2,6-dinitrotoluene[4-]
	  o Amino-4,6-dinitrotoluene[2-]
	  o Dimethyl Phthalate
	  o Di-n-octylphthalate
	  o Dinitrotoluene[2,4-]
	  o Dinitrotoluene[2,6-]
	  o Nitrobenzene
	  o Nitrotoluene[2-]
	  o Nitrotoluene[3-]
	  o Nitrotoluene[4-]
	  o Methylnaphthalene[2-]
	  o PETN
	• Aquatic community organisms/ water (Tier 4):
	  o Chromium (total)
	New NOAEL/NOEC-based TRV Updates
	• The use status of food and water TRVs for mammals changed from YES to

Table 1. ESL Changes by Ecorisk Database Release

Ecorisk Database Release	ESL Changes
	NO due to replacement by a more relevant TRV: o Amino-2,6-dinitrotoluene[4-] o Amino-4,6-dinitrotoluene[2-] o Dimethyl Phthalate o Di-n-octylphthalate o Dinitrotoluene[2,4-] o Dinitrotoluene[2,6-] o Nitrobenzene o Nitrotoluene[2-] o Nitrotoluene[3-] o Nitrotoluene[4-] o Methylnaphthalene[2-] o PETN • The use status of food and water TRVs for birds changed from YES to NO due to replacement by a more relevant TRV: o Chromium (total) • The use status of the soil TRV for plants changed from YES to NO due to replacement by a more relevant TRV: o Styrene • The following TRVs were updated due to data entry or calculation corrections: o Benzo(a)anthracene/Food/Bird o Carbazol/Food/Mammal o Styrene/Soil/Plant o Iron/Sediment/Aquatic community organism • The following TRVs were deleted or use status was changed from YES to NO due to toxicity data being under review: o Aldrin/Soil/Plant (deleted) o RDX/Soil/Plant o Tetryl/Soil/Plant o Chromium (total)/Soil/Plant and Invertebrate o Chromium (+6)/Sediment/Aquatic community organism • The use status of food TRVs for mammals changed from YES to NO due to replacement by a more relevant TRV and the TRV was updated due to a calculation correction: o Chromium (total) • The soil TRVs for plants were updated due to a calculation correction and their use status was also changed from YES to NO due to the toxicity data set being under review: o Lithium

Table 1. ESL Changes by Ecorisk Database Release

Ecorisk Database Release	ESL Changes
	o Molybdenum **New TFs** • No new values **TF Updates** • No updated values **Interface Updates** • New and updated summary report designs that allow easier access to toxicity data for export to other applications for data mining or analysis purposes. • Addition of LOAEL/LOEC-based TRV/soil ESL fields to interface screens and reports.

Table 1. ESL Changes by Ecorisk Database Release

Ecorisk Database Release	ESL Changes

October 2012 – Release 3.1	In this release of the database, LOAEL/LOEC-based water and sediment TRVs and ESLs were added for all chemicals for all receptors in the database where toxicity data was available to do so. NOAEL/NOEC-based TRV/ESL updates for water and sediment for birds and mammals were also made as necessary based on a quality assurance review of the data. In addition to the quality assurance review of the data, a literature search was performed for the aquatic community organism toxicity data for water and sediment ESLs for all chemicals, in order to identify more suitable data. LANL's Screening Level Ecological Risk Assessment (SLERA) methods, revision 3 (LA-UR-12-24152, ER ID 226715), which is forthcoming (in October) presents the details of the data sources utilized to update the aquatic ESLs.
	
	New NOAEL/NOEC-based ESLs
	• Recent literature review for toxicity data for sediment for aquatic community organisms filled data gap.
	  o Uranium
	NOAEL/NOEC-based ESL Updates
	• Deletion of sediment ESLs for aquatic community organisms due to retraction of previous TRV because toxicity data was found to be unsuitable because it represents a marine environment:
	  o Antimony
	  o Benzoic acid
	• Updates to sediment ESLs for aquatic community organisms due to the availability of a more relevant TRV:
	  • Acenaphthene
	  • Acenaphthylene
	  • Aluminum
	  • Anthracene
	  • Aroclor-1016
	  • Aroclor-1242
	  • Aroclor-1248
	  • Aroclor-1254
	  • Aroclor-1260
	  • Arsenic
	  • Barium
	  • Benzene
	  • Benzo(a)anthracene
	  • Benzo(a)pyrene

Table 1. ESL Changes by Ecorisk Database Release

Ecorisk Database Release	ESL Changes
	• Benzo(b)fluoranthene • Benzo(g,h,i)perylene • BHC[beta-] • BHC[gamma-] • Butyl Benzyl Phthalate • Cadmium • Chlordane[alpha-] • Chlordane[gamma-] • Chlorobenzene • Chlorophenol[2-] • Chromium (total) • Chrysene • Copper • DDE[4,4'-] • DDT[4,4'-] • Dibenzo(a,h)anthracene • Dibenzofuran • Dichlorobenzene[1,4-] • Dichloroethane[1,1-] • Dichloroethene[1,1-] • Dichloroethene[cis/trans-1,2-] • Dieldrin • Di-n-Butyl Phthalate • Endosulfan • Endrin • Fluoranthene • Fluorene • Heptachlor • Indeno(1,2,3-cd)pyrene • Lead • Manganese • Mercury (inorganic) • Methylene Chloride • Methylnaphthalene[2-] • Naphthalene

Table 1. ESL Changes by Ecorisk Database Release

Ecorisk Database Release	ESL Changes
	• Nickel • Pentachlorophenol • Phenanthrene • Pyrene • Selenium • Silver • Tetrachlorodibenzodioxin[2,3,7,8-] • Tetrachloroethene • Toluene • Toxaphene (Technical Grade) • Trichlorobenzene[1,2,4-] • Trichloroethane[1,1,1-] • Trichloroethene • Xylene (Total) • Zinc • Updates to sediment ESLs for birds and mammals for aluminum due to the availability of a more relevant ESL based on the pH ESL reported by EPA EcoSSL. • Updates to water ESLs for aquatic community organisms due to the availability of a more relevant TRV: • Acenaphthene • Acenaphthylene • Acetone • Aluminum • Anthracene • Antimony • Aroclor-1242 • Aroclor-1248 • Aroclor-1254 • Aroclor-1260 • Barium • Benzene • Benzo(b)fluoranthene • Benzo(g,h,i)perylene • Benzo(k)fluoranthene

Table 1. ESL Changes by Ecorisk Database Release

Ecorisk Database Release	ESL Changes
	• Benzoic Acid • Beryllium • BHC[beta-] • BHC[gamma-] • Boron • Butanone[2-] • Butyl Benzyl Phthalate • Cadmium • Chloride • Chlorobenzene • Chloroform • Chlorophenol[2-] • Chrysene • DDE[4,4'-] • DDT[4,4'-] • Dibenzo(a,h)anthracene • Dibenzofuran • Dichloroethane[1,1-] • Dichloroethane[1,2-] • Dichloroethene[1,1-] • Dichloroethene[cis/trans-1,2-] • Dimethyl Phthalate • Di-n-Butyl Phthalate • Dinitrobenzene[1,3-] • Dinitrotoluene[2,4-] • Dinitrotoluene[2,6-] • Di-n-octylphthalate • Fluoranthene • Fluoride • Heptachlor • Indeno(1,2,3-cd)pyrene • Lead • Manganese • Methylene Chloride • Methylnaphthalene[2-]

Table 1. ESL Changes by Ecorisk Database Release

Ecorisk Database Release	ESL Changes
	• Molybdenum • Naphthalene • Nickel • Nitrobenzene • Pentachlorophenol • Phenol • Pyrene • Silver • Strontium (stable) • Tetrachlorodibenzodioxin[2,3,7,8-] • Tetrachloroethene • Thallium • Toluene • Trichlorobenzene[1,2,4-] • Trichloroethane[1,1,1-] • Trichloroethene • Uranium • Xylene (Total) • Zinc • Updates to water ESLs for the red fox and the occult little brown myotis bat due to correction of data entry error: o Di-n-Butyl Phthalate **Minimum ESL Updates** • None. **New NOAEL/NOEC-based TRVs** • Filled data gap for Aquatic Community Organism: o Uranium • Recent literature review identified new sediment TRVs for Aquatic Community Organisms: • Acenaphthene • Acenaphthylene • Aluminum • Anthracene • Antimony • Aroclor-1016 • Aroclor-1242

Table 1. ESL Changes by Ecorisk Database Release

Ecorisk Database Release	ESL Changes
	• Aroclor-1248 • Aroclor-1254 • Aroclor-1260 • Arsenic • Barium • Benzene • Benzo(a)anthracene • Benzo(a)pyrene • Benzo(b)fluoranthene • Benzo(g,h,i)perylene • Benzo(k)fluoranthene • BHC[beta-] • BHC[gamma-] • Butyl Benzyl Phthalate • Cadmium • Chlordane[alpha-] • Chlordane[gamma-] • Chlorobenzene • Chlorophenol[2-] • Chromium (total) • Chrysene • Copper • Cyanide (total) • DDE[4,4'-] • DDT[4,4'-] • Dibenzo(a,h)anthracene • Dichlorobenzene[1,4-] • Dichloroethane[1,1-] • Dichloroethene[1,1-] • Dichloroethene[cis/trans-1,2-] • Dieldrin • Di-n-Butyl Phthalate • Endosulfan • Endrin • Fluoranthene

Table 1. ESL Changes by Ecorisk Database Release

Ecorisk Database Release	ESL Changes
	• Fluorene • Heptachlor • Indeno(1,2,3-cd)pyrene • Iron • Lead • Manganese • Mercury (inorganic) • Methylene Chloride • Methylnaphthalene[2-] • Naphthalene • Nickel • Pentachlorophenol • Phenanthrene • Pyrene • Selenium • Silver • Tetrachlorodibenzodioxin[2,3,7,8-] • Tetrachloroethene • Toluene • Toxaphene (Technical Grade) • Trichlorobenzene[1,2,4-] • Trichloroethane[1,1,1-] • Trichloroethene • Uranium • Xylene (Total) • Zinc • Recent literature review identified new water TRVs for Aquatic Community Organisms: • Acenaphthene • Acenaphthylene • Acetone • Aluminum • Anthracene • Antimony • Aroclor-1016

Table 1. ESL Changes by Ecorisk Database Release

Ecorisk Database Release	ESL Changes
	• Aroclor-1242 • Aroclor-1248 • Aroclor-1254 • Aroclor-1260 • Arsenic • Barium • Benzene • Benzo(a)anthracene • Benzo(a)pyrene • Benzo(b)fluoranthene • Benzo(g,h,i)perylene • Benzo(k)fluoranthene • Benzoic Acid • Beryllium • BHC[beta-] • BHC[gamma-] • Bis(2-ethylhexyl)phthalate • Boron • Butanone[2-] • Butyl Benzyl Phthalate • Cadmium • Chlordane[alpha-] • Chlordane[gamma-] • Chloride • Chlorobenzene • Chloroform • Chlorophenol[2-] • Chromium (total) • Chromium(+6) • Chrysene • Cobalt • Copper • Cyanide (total) • DDE[4,4'-] • DDT[4,4'-]

Table 1. ESL Changes by Ecorisk Database Release

Ecorisk Database Release	ESL Changes
	• Dibenzo(a,h)anthracene • Dibenzofuran • Dichlorobenzene[1,4-] • Dichloroethane[1,1-] • Dichloroethane[1,2-] • Dichloroethene[1,1-] • Dichloroethene[cis/trans-1,2-] • Dieldrin • Dimethyl Phthalate • Di-n-Butyl Phthalate • Dinitrobenzene[1,3-] • Dinitrotoluene[2,4-] • Dinitrotoluene[2,6-] • Di-n-octylphthalate • Endosulfan • Endrin • Fluoranthene • Fluorene • Fluoride • Heptachlor • Indeno(1,2,3-cd)pyrene • Iron • Lead • Manganese • Mercury (inorganic) • Mercury (methyl) • Methoxychlor[4,4'-] • Methylene Chloride • Methylnaphthalene[2-] • Molybdenum • Naphthalene • Nickel • Nitrobenzene • Pentachloronitrobenzene • Pentachlorophenol

Table 1. ESL Changes by Ecorisk Database Release

Ecorisk Database Release	ESL Changes
	• Phenanthrene • Phenol • Pyrene • Selenium • Silver • Strontium (stable) • Tetrachlorodibenzodioxin[2,3,7,8-] • Tetrachloroethene • Thallium • Toluene • Toxaphene (Technical Grade) • Trichlorobenzene[1,2,4-] • Trichloroethane[1,1,1-] • Trichloroethene • Uranium • Vanadium • Xylene (Total) • Zinc **New NOAEL/NOEC-based TRV Updates** • The use status of sediment TRVs for Aquatic Community Organisms changed from YES to NO due to replacement by a more relevant TRV: • Acenaphthene • Acenaphthylene • Aluminum • Anthracene • Antimony • Aroclor-1016 • Aroclor-1242 • Aroclor-1248 • Aroclor-1254 • Aroclor-1260 • Arsenic • Barium • Benzene • Benzo(a)anthracene

Table 1. ESL Changes by Ecorisk Database Release

Ecorisk Database Release	ESL Changes
	• Benzo(a)pyrene • Benzo(b)fluoranthene • Benzo(g,h,i)perylene • Benzo(k)fluoranthene • Benzoic Acid • BHC[beta-] • BHC[gamma-] • Butyl Benzyl Phthalate • Cadmium • Chlordane[alpha-] • Chlordane[gamma-] • Chlorobenzene • Chlorophenol[2-] • Chromium (total) • Chrysene • Copper • Cyanide (total) • DDE[4,4'-] • DDT[4,4'-] • Dibenzo(a,h)anthracene • Dichlorobenzene[1,4-] • Dichloroethane[1,1-] • Dichloroethene[1,1-] • Dichloroethene[cis/trans-1,2-] • Dieldrin • Di-n-Butyl Phthalate • Endosulfan • Endrin • Fluoranthene • Fluorene • Heptachlor • Indeno(1,2,3-cd)pyrene • Iron • Lead • Manganese

Table 1. ESL Changes by Ecorisk Database Release

Ecorisk Database Release	ESL Changes
	• Mercury (inorganic) • Methylene Chloride • Methylnaphthalene[2-] • Naphthalene • Nickel • Pentachlorophenol • Phenanthrene • Pyrene • Selenium • Silver • Tetrachlorodibenzodioxin[2,3,7,8-] • Tetrachloroethene • Toluene • Toxaphene (Technical Grade) • Trichlorobenzene[1,2,4-] • Trichloroethane[1,1,1-] • Trichloroethene • Xylene (Total) • Zinc • The use status of water TRVs for Aquatic Community Organisms changed from YES to NO due to replacement by a more relevant TRV: • Acenaphthene • Acenaphthylene • Acetone • Aluminum • Anthracene • Antimony • Aroclor-1016 • Aroclor-1242 • Aroclor-1248 • Aroclor-1254 • Aroclor-1260 • Arsenic • Barium • Benzene

Table 1. ESL Changes by Ecorisk Database Release

Ecorisk Database Release	ESL Changes
	• Benzo(a)anthracene • Benzo(a)pyrene • Benzo(b)fluoranthene • Benzo(g,h,i)perylene • Benzo(k)fluoranthene • Benzoic Acid (previous value was also corrected) • Beryllium • BHC[beta-] • BHC[gamma-] • Bis(2-ethylhexyl)phthalate • Boron • Butanone[2-] • Butyl Benzyl Phthalate • Cadmium • Calcium • Chlordane[alpha-] • Chlordane[gamma-] • Chloride • Chloro-3-methylphenol[4-] • Chlorobenzene • Chloroform • Chlorophenol[2-] • Chromium (total) • Chromium(+6) • Chrysene • Cobalt • Copper • Cyanide (total) • DDE[4,4'-] • DDT[4,4'-] • Dibenzo(a,h)anthracene • Dibenzofuran • Dichlorobenzene[1,4-] • Dichloroethane[1,1-] • Dichloroethane[1,2-]

Table 1. ESL Changes by Ecorisk Database Release

Ecorisk Database Release	ESL Changes
	• Dichloroethene[1,1-] • Dichloroethene[cis/trans-1,2-] • Dichloroethene[cis-1,2-] • Dieldrin • Dimethyl Phthalate • Di-n-Butyl Phthalate • Dinitrobenzene[1,3-] • Dinitrotoluene[2,4-] • Dinitrotoluene[2,6-] • Di-n-octylphthalate • Endosulfan • Endrin • Fluoranthene • Fluorene • Fluoride • Heptachlor • Indeno(1,2,3-cd)pyrene • Iron • Lead • Manganese • Mercury (inorganic) • Mercury (methyl) • Methoxychlor[4,4'-] • Methylene Chloride • Methylnaphthalene[2-] • Molybdenum • Naphthalene • Nickel • Nitrobenzene • Pentachloronitrobenzene • Pentachlorophenol • Phenanthrene • Phenol • Pyrene • Selenium

Table 1. ESL Changes by Ecorisk Database Release

Ecorisk Database Release	ESL Changes
	• Silver • Strontium (stable) • Tetrachlorodibenzodioxin[2,3,7,8-] • Tetrachloroethane[1,1,2,2-] • Tetrachloroethene • Thallium • Toluene • Toxaphene (Technical Grade) • Trichlorobenzene[1,2,4-] • Trichloroethane[1,1,1-] • Trichloroethene • Uranium • Vanadium • Xylene (Total) • Zinc • The use status of the sediment TRV for Aluminum bird and mammal receptors changed from YES to NO due to replacement by a more relevant TRV; TRV/ESL based on pH as is the case for soil. **New TFs** • No new values. **TF Updates** • No updated values. **Interface Updates** • Updated water and sediment ESL derivation screens to be current with revision 3 of the SLERA.
	BACK TO TOP

Table 2. Beta Release (October 1998) List of Soil ESLs for Bird Receptors

Analyte Class	Analyte Group	Analyte Name	Analyte Code	ESL Medium	Receptor Group
NONRAD	D/F	Tetrachlorodibenzodioxin[2,3,7,8-]	1746-01-6	SOIL	Bird
NONRAD	INORG	Aluminum	AL	SOIL	Bird
NONRAD	INORG	Arsenic	AS	SOIL	Bird
NONRAD	INORG	Barium	BA	SOIL	Bird
NONRAD	INORG	Cadmium	CD	SOIL	Bird
NONRAD	INORG	Chromium (total)	CR	SOIL	Bird
NONRAD	INORG	Chromium(+6)	CR(+6)	SOIL	Bird
NONRAD	INORG	Cobalt	CO	SOIL	Bird
NONRAD	INORG	Copper	CU	SOIL	Bird
NONRAD	INORG	Cyanide (total)	CN(-1)	SOIL	Bird
NONRAD	INORG	Lead	PB	SOIL	Bird
NONRAD	INORG	Manganese	MN	SOIL	Bird
NONRAD	INORG	Mercury (inorganic)	HGI	SOIL	Bird
NONRAD	INORG	Mercury (methyl)	HGM	SOIL	Bird
NONRAD	INORG	Nickel	NI	SOIL	Bird
NONRAD	INORG	Selenium	SE	SOIL	Bird
NONRAD	INORG	Silver	AG	SOIL	Bird
NONRAD	INORG	Uranium	U	SOIL	Bird
NONRAD	INORG	Vanadium	V	SOIL	Bird
NONRAD	INORG	Zinc	ZN	SOIL	Bird
NONRAD	PAH	Naphthalene	91-20-3	SOIL	Bird
NONRAD	PCB	Aroclor-1242	53469-21-9	SOIL	Bird
NONRAD	PCB	Aroclor-1248	12672-29-6	SOIL	Bird
NONRAD	PCB	Aroclor-1254	11097-69-1	SOIL	Bird
NONRAD	PCB	Aroclor-1260	11096-82-5	SOIL	Bird
NONRAD	PEST	BHC[beta-]	319-85-7	SOIL	Bird
NONRAD	PEST	BHC[gamma-]	58-89-9	SOIL	Bird
NONRAD	PEST	Chlordane[alpha-]	5103-71-9	SOIL	Bird
NONRAD	PEST	Chlordane[gamma-]	5103-74-2	SOIL	Bird
NONRAD	PEST	DDE[4,4'-]	72-55-9	SOIL	Bird
NONRAD	PEST	DDT[4,4'-]	50-29-3	SOIL	Bird
NONRAD	PEST	Dieldrin	60-57-1	SOIL	Bird
NONRAD	PEST	Endosulfan	115-29-7	SOIL	Bird
NONRAD	PEST	Endrin	72-20-8	SOIL	Bird
NONRAD	PEST	Heptachlor	76-44-8	SOIL	Bird
NONRAD	PEST	Kepone	143-50-0	SOIL	Bird
NONRAD	PEST	Methoxychlor[4,4'-]	72-43-5	SOIL	Bird
NONRAD	PEST	Toxaphene (Technical Grade)	8001-35-2	SOIL	Bird
NONRAD	SVOC	Bis(2-ethylhexyl)phthalate	117-81-7	SOIL	Bird

Table 2. Beta Release (October 1998) List of Soil ESLs for Bird Receptors

Analyte Class	Analyte Group	Analyte Name	Analyte Code	ESL Medium	Receptor Group
NONRAD	SVOC	Chloro-3-methylphenol[4-]	59-50-7	SOIL	Bird
NONRAD	SVOC	Chlorophenol[2-]	95-57-8	SOIL	Bird
NONRAD	SVOC	Di-n-Butyl Phthalate	84-74-2	SOIL	Bird
NONRAD	SVOC	Pentachloronitrobenzene	82-68-8	SOIL	Bird
NONRAD	SVOC	Pentachlorophenol	87-86-5	SOIL	Bird
NONRAD	VOC	Acetone	67-64-1	SOIL	Bird
NONRAD	VOC	Xylene (Total)	1330-20-7	SOIL	Bird
RAD	RAD	Americium-241	AM-241	SOIL	Bird
RAD	RAD	Cesium-134	CS-134	SOIL	Bird
RAD	RAD	Cesium-137 + Barium-137	CS-137/ BA-137	SOIL	Bird
RAD	RAD	Cobalt-60	CO-60	SOIL	Bird
RAD	RAD	Europium-152	EU-152	SOIL	Bird
RAD	RAD	Plutonium-238	PU-238	SOIL	Bird
RAD	RAD	Plutonium-239, 240	PU-239/240	SOIL	Bird
RAD	RAD	Plutonium-241	PU-241	SOIL	Bird
RAD	RAD	Radium-226	RA-226	SOIL	Bird
RAD	RAD	Sodium-22	NA-22	SOIL	Bird
RAD	RAD	Strontium-90 + Yittrium-90	SR-90/ Y-90	SOIL	Bird
RAD	RAD	Thorium-228	TH-228	SOIL	Bird
RAD	RAD	Thorium-230	TH-230	SOIL	Bird
RAD	RAD	Thorium-232	TH-232	SOIL	Bird
RAD	RAD	Tritium	H-3	SOIL	Bird
RAD	RAD	Uranium-234	U-234	SOIL	Bird
RAD	RAD	Uranium-235	U-235	SOIL	Bird
RAD	RAD	Uranium-238	U-238	SOIL	Bird

BACK TO TOP

Table 3. Beta Release (October 1998) List of Soil ESLs for Mammalian Receptors

Analyte Class	Analyte Group	Analyte Name	Analyte Code	ESL Medium	Receptor Group
NONRAD	D/F	Tetrachlorodibenzodioxin[2,3,7,8-]	1746-01-6	SOIL	Mammal
NONRAD	HE	Amino-2,6-dinitrotoluene[4-]	19406-51-0	SOIL	Mammal
NONRAD	HE	Amino-4,6-dinitrotoluene[2-]	35572-78-2	SOIL	Mammal
NONRAD	HE	Dinitrobenzene[1,3-]	99-65-0	SOIL	Mammal
NONRAD	HE	Dinitrotoluene[2,4-]	121-14-2	SOIL	Mammal
NONRAD	HE	Dinitrotoluene[2,6-]	606-20-2	SOIL	Mammal
NONRAD	HE	HMX	2691-41-0	SOIL	Mammal
NONRAD	HE	Nitroglycerine	55-63-0	SOIL	Mammal
NONRAD	HE	Nitrotoluene[2-]	88-72-2	SOIL	Mammal
NONRAD	HE	Nitrotoluene[3-]	99-08-1	SOIL	Mammal

Table 3. Beta Release (October 1998) List of Soil ESLs for Mammalian Receptors

Analyte Class	Analyte Group	Analyte Name	Analyte Code	ESL Medium	Receptor Group
NONRAD	HE	Nitrotoluene[4-]	99-99-0	SOIL	Mammal
NONRAD	HE	PETN	78-11-5	SOIL	Mammal
NONRAD	HE	RDX	121-82-4	SOIL	Mammal
NONRAD	HE	Tetryl	479-45-8	SOIL	Mammal
NONRAD	HE	Trinitrobenzene[1,3,5-]	99-35-4	SOIL	Mammal
NONRAD	HE	Trinitrotoluene[2,4,6-]	118-96-7	SOIL	Mammal
NONRAD	INORG	Aluminum	AL	SOIL	Mammal
NONRAD	INORG	Antimony	SB	SOIL	Mammal
NONRAD	INORG	Arsenic	AS	SOIL	Mammal
NONRAD	INORG	Barium	BA	SOIL	Mammal
NONRAD	INORG	Beryllium	BE	SOIL	Mammal
NONRAD	INORG	Cadmium	CD	SOIL	Mammal
NONRAD	INORG	Chromium (total)	CR	SOIL	Mammal
NONRAD	INORG	Chromium(+6)	CR(+6)	SOIL	Mammal
NONRAD	INORG	Cobalt	CO	SOIL	Mammal
NONRAD	INORG	Copper	CU	SOIL	Mammal
NONRAD	INORG	Cyanide (total)	CN(-1)	SOIL	Mammal
NONRAD	INORG	Lead	PB	SOIL	Mammal
NONRAD	INORG	Manganese	MN	SOIL	Mammal
NONRAD	INORG	Mercury (inorganic)	HGI	SOIL	Mammal
NONRAD	INORG	Mercury (methyl)	HGM	SOIL	Mammal
NONRAD	INORG	Nickel	NI	SOIL	Mammal
NONRAD	INORG	Selenium	SE	SOIL	Mammal
NONRAD	INORG	Silver	AG	SOIL	Mammal
NONRAD	INORG	Thallium	TL	SOIL	Mammal
NONRAD	INORG	Titanium	TI	SOIL	Mammal
NONRAD	INORG	Uranium	U	SOIL	Mammal
NONRAD	INORG	Vanadium	V	SOIL	Mammal
NONRAD	INORG	Zinc	ZN	SOIL	Mammal
NONRAD	PAH	Acenaphthene	83-32-9	SOIL	Mammal
NONRAD	PAH	Acenaphthylene	208-96-8	SOIL	Mammal
NONRAD	PAH	Anthracene	120-12-7	SOIL	Mammal
NONRAD	PAH	Benzo(a)anthracene	56-55-3	SOIL	Mammal
NONRAD	PAH	Benzo(a)pyrene	50-32-8	SOIL	Mammal
NONRAD	PAH	Benzo(b)fluoranthene	205-99-2	SOIL	Mammal
NONRAD	PAH	Benzo(g,h,i)perylene	191-24-2	SOIL	Mammal
NONRAD	PAH	Benzo(k)fluoranthene	207-08-9	SOIL	Mammal
NONRAD	PAH	Chrysene	218-01-9	SOIL	Mammal
NONRAD	PAH	Dibenzo(a,h)anthracene	53-70-3	SOIL	Mammal
NONRAD	PAH	Fluoranthene	206-44-0	SOIL	Mammal

Table 3. Beta Release (October 1998) List of Soil ESLs for Mammalian Receptors

Analyte Class	Analyte Group	Analyte Name	Analyte Code	ESL Medium	Receptor Group
NONRAD	PAH	Fluorene	86-73-7	SOIL	Mammal
NONRAD	PAH	Indeno(1,2,3-cd)pyrene	193-39-5	SOIL	Mammal
NONRAD	PAH	Methylnaphthalene[2-]	91-57-6	SOIL	Mammal
NONRAD	PAH	Naphthalene	91-20-3	SOIL	Mammal
NONRAD	PAH	Phenanthrene	85-01-8	SOIL	Mammal
NONRAD	PAH	Pyrene	129-00-0	SOIL	Mammal
NONRAD	PCB	Aroclor-1016	12674-11-2	SOIL	Mammal
NONRAD	PCB	Aroclor-1242	53469-21-9	SOIL	Mammal
NONRAD	PCB	Aroclor-1248	12672-29-6	SOIL	Mammal
NONRAD	PCB	Aroclor-1254	11097-69-1	SOIL	Mammal
NONRAD	PCB	Aroclor-1260	11096-82-5	SOIL	Mammal
NONRAD	PEST	BHC[beta-]	319-85-7	SOIL	Mammal
NONRAD	PEST	BHC[gamma-]	58-89-9	SOIL	Mammal
NONRAD	PEST	Chlordane[alpha-]	5103-71-9	SOIL	Mammal
NONRAD	PEST	Chlordane[gamma-]	5103-74-2	SOIL	Mammal
NONRAD	PEST	DDE[4,4'-]	72-55-9	SOIL	Mammal
NONRAD	PEST	DDT[4,4'-]	50-29-3	SOIL	Mammal
NONRAD	PEST	Dieldrin	60-57-1	SOIL	Mammal
NONRAD	PEST	Endosulfan	115-29-7	SOIL	Mammal
NONRAD	PEST	Endrin	72-20-8	SOIL	Mammal
NONRAD	PEST	Heptachlor	76-44-8	SOIL	Mammal
NONRAD	PEST	Kepone	143-50-0	SOIL	Mammal
NONRAD	PEST	Methoxychlor[4,4'-]	72-43-5	SOIL	Mammal
NONRAD	PEST	Toxaphene (Technical Grade)	8001-35-2	SOIL	Mammal
NONRAD	SVOC	Benzoic Acid	65-85-0	SOIL	Mammal
NONRAD	SVOC	Bis(2-ethylhexyl)phthalate	117-81-7	SOIL	Mammal
NONRAD	SVOC	Butyl Benzyl Phthalate	85-68-7	SOIL	Mammal
NONRAD	SVOC	Chloro-3-methylphenol[4-]	59-50-7	SOIL	Mammal
NONRAD	SVOC	Chlorobenzene	108-90-7	SOIL	Mammal
NONRAD	SVOC	Chlorophenol[2-]	95-57-8	SOIL	Mammal
NONRAD	SVOC	Dimethyl Phthalate	131-11-3	SOIL	Mammal
NONRAD	SVOC	Di-n-Butyl Phthalate	84-74-2	SOIL	Mammal
NONRAD	SVOC	Di-n-octylphthalate	117-84-0	SOIL	Mammal
NONRAD	SVOC	Nitrobenzene	98-95-3	SOIL	Mammal
NONRAD	SVOC	Pentachloronitrobenzene	82-68-8	SOIL	Mammal
NONRAD	SVOC	Pentachlorophenol	87-86-5	SOIL	Mammal
NONRAD	SVOC	Phenol	108-95-2	SOIL	Mammal
NONRAD	VOC	Acetone	67-64-1	SOIL	Mammal
NONRAD	VOC	Benzene	71-43-2	SOIL	Mammal
NONRAD	VOC	Butanone[2-]	78-93-3	SOIL	Mammal

Table 3. Beta Release (October 1998) List of Soil ESLs for Mammalian Receptors					
Analyte Class	**Analyte Group**	**Analyte Name**	**Analyte Code**	**ESL Medium**	**Receptor Group**
NONRAD	VOC	Chloroform	67-66-3	SOIL	Mammal
NONRAD	VOC	Dichloroethane[1,1-]	75-34-3	SOIL	Mammal
NONRAD	VOC	Dichloroethene[1,1-]	75-35-4	SOIL	Mammal
NONRAD	VOC	Dichloroethene[cis/trans-1,2-]	540-59-0	SOIL	Mammal
NONRAD	VOC	Methylene Chloride	75-09-2	SOIL	Mammal
NONRAD	VOC	Tetrachloroethane[1,1,2,2-]	79-34-5	SOIL	Mammal
NONRAD	VOC	Tetrachloroethene	127-18-4	SOIL	Mammal
NONRAD	VOC	Toluene	108-88-3	SOIL	Mammal
NONRAD	VOC	Trichlorobenzene[1,2,4-]	120-82-1	SOIL	Mammal
NONRAD	VOC	Trichloroethane[1,1,1-]	71-55-6	SOIL	Mammal
NONRAD	VOC	Trichloroethene	79-01-6	SOIL	Mammal
NONRAD	VOC	Xylene (Total)	1330-20-7	SOIL	Mammal
RAD	RAD	Americium-241	AM-241	SOIL	Mammal
RAD	RAD	Cesium-134	CS-134	SOIL	Mammal
RAD	RAD	Cesium-137 + Barium-137	CS-137/ BA-137	SOIL	Mammal
RAD	RAD	Cobalt-60	CO-60	SOIL	Mammal
RAD	RAD	Europium-152	EU-152	SOIL	Mammal
RAD	RAD	Plutonium-238	PU-238	SOIL	Mammal
RAD	RAD	Plutonium-239, 240	PU-239/240	SOIL	Mammal
RAD	RAD	Plutonium-241	PU-241	SOIL	Mammal
RAD	RAD	Radium-226	RA-226	SOIL	Mammal
RAD	RAD	Sodium-22	NA-22	SOIL	Mammal
RAD	RAD	Strontium-90 + Yittrium-90	SR-90/ Y-90	SOIL	Mammal
RAD	RAD	Thorium-228	TH-228	SOIL	Mammal
RAD	RAD	Thorium-230	TH-230	SOIL	Mammal
RAD	RAD	Thorium-232	TH-232	SOIL	Mammal
RAD	RAD	Tritium	H-3	SOIL	Mammal
RAD	RAD	Uranium-234	U-234	SOIL	Mammal
RAD	RAD	Uranium-235	U-235	SOIL	Mammal
RAD	RAD	Uranium-238	U-238	SOIL	Mammal

BACK TO TOP

Table 4. Beta Release (October 1998) List of Soil ESLs for Earthworm Receptor					
Analyte Class	**Analyte Class**	**Analyte Class**	**Analyte Class**	**Analyte Class**	**Analyte Class**
NONRAD	D/F	Tetrachlorodibenzodioxin[2,3,7,8-]	1746-01-6	SOIL	Invertebrate
NONRAD	INORG	Arsenic	AS	SOIL	Invertebrate
NONRAD	INORG	Cadmium	CD	SOIL	Invertebrate
NONRAD	INORG	Chromium(+6)	CR(+6)	SOIL	Invertebrate
NONRAD	INORG	Copper	CU	SOIL	Invertebrate

Table 4. Beta Release (October 1998) List of Soil ESLs for Earthworm Receptor					
Analyte Class	**Analyte Class**	**Analyte Class**	**Analyte Class**	**Analyte Class**	**Analyte Class**
NONRAD	INORG	Lead	PB	SOIL	Invertebrate
NONRAD	INORG	Mercury (inorganic)	HGI	SOIL	Invertebrate
NONRAD	INORG	Mercury (methyl)	HGM	SOIL	Invertebrate
NONRAD	INORG	Nickel	NI	SOIL	Invertebrate
NONRAD	INORG	Selenium	SE	SOIL	Invertebrate
NONRAD	INORG	Zinc	ZN	SOIL	Invertebrate
NONRAD	PAH	Fluorene	86-73-7	SOIL	Invertebrate
NONRAD	SVOC	Chlorobenzene	108-90-7	SOIL	Invertebrate
NONRAD	SVOC	Dimethyl Phthalate	131-11-3	SOIL	Invertebrate
NONRAD	SVOC	Nitrobenzene	98-95-3	SOIL	Invertebrate
NONRAD	SVOC	Pentachlorophenol	87-86-5	SOIL	Invertebrate
NONRAD	SVOC	Phenol	108-95-2	SOIL	Invertebrate
NONRAD	VOC	Dichlorobenzene[1,4-]	106-46-7	SOIL	Invertebrate
NONRAD	VOC	Trichlorobenzene[1,2,4-]	120-82-1	SOIL	Invertebrate
RAD	RAD	Americium-241	AM-241	SOIL	Invertebrate
RAD	RAD	Cesium-134	CS-134	SOIL	Invertebrate
RAD	RAD	Cesium-137 + Barium-137	CS-137/ BA-137	SOIL	Invertebrate
RAD	RAD	Cobalt-60	CO-60	SOIL	Invertebrate
RAD	RAD	Europium-152	EU-152	SOIL	Invertebrate
RAD	RAD	Plutonium-238	PU-238	SOIL	Invertebrate
RAD	RAD	Plutonium-239, 240	PU-239/240	SOIL	Invertebrate
RAD	RAD	Plutonium-241	PU-241	SOIL	Invertebrate
RAD	RAD	Radium-226	RA-226	SOIL	Invertebrate
RAD	RAD	Sodium-22	NA-22	SOIL	Invertebrate
RAD	RAD	Strontium-90 + Yittrium-90	SR-90/ Y-90	SOIL	Invertebrate
RAD	RAD	Thorium-228	TH-228	SOIL	Invertebrate
RAD	RAD	Thorium-230	TH-230	SOIL	Invertebrate
RAD	RAD	Thorium-232	TH-232	SOIL	Invertebrate
RAD	RAD	Tritium	H-3	SOIL	Invertebrate
RAD	RAD	Uranium-234	U-234	SOIL	Invertebrate
RAD	RAD	Uranium-235	U-235	SOIL	Invertebrate
RAD	RAD	Uranium-238	U-238	SOIL	Invertebrate

BACK TO TOP

Table 5. Beta Release (October 1998) List of Soil ESLs for Generic Plant Receptor					
Analyte Class	**Analyte Class**	**Analyte Class**	**Analyte Class**	**Analyte Class**	**Analyte Class**
NONRAD	HE	Amino-4,6-dinitrotoluene[2-]	35572-78-2	SOIL	Plant
NONRAD	HE	RDX	121-82-4	SOIL	Plant
NONRAD	HE	Tetryl	479-45-8	SOIL	Plant

Table 5. Beta Release (October 1998) List of Soil ESLs for Generic Plant Receptor					
Analyte Class	**Analyte Class**	**Analyte Class**	**Analyte Class**	**Analyte Class**	**Analyte Class**
NONRAD	HE	Trinitrotoluene[2,4,6-]	118-96-7	SOIL	Plant
NONRAD	INORG	Aluminum	AL	SOIL	Plant
NONRAD	INORG	Antimony	SB	SOIL	Plant
NONRAD	INORG	Arsenic	AS	SOIL	Plant
NONRAD	INORG	Barium	BA	SOIL	Plant
NONRAD	INORG	Beryllium	BE	SOIL	Plant
NONRAD	INORG	Cadmium	CD	SOIL	Plant
NONRAD	INORG	Chromium (total)	CR	SOIL	Plant
NONRAD	INORG	Chromium(+6)	CR(+6)	SOIL	Plant
NONRAD	INORG	Cobalt	CO	SOIL	Plant
NONRAD	INORG	Copper	CU	SOIL	Plant
NONRAD	INORG	Lead	PB	SOIL	Plant
NONRAD	INORG	Manganese	MN	SOIL	Plant
NONRAD	INORG	Mercury (inorganic)	HGI	SOIL	Plant
NONRAD	INORG	Nickel	NI	SOIL	Plant
NONRAD	INORG	Selenium	SE	SOIL	Plant
NONRAD	INORG	Silver	AG	SOIL	Plant
NONRAD	INORG	Thallium	TL	SOIL	Plant
NONRAD	INORG	Uranium	U	SOIL	Plant
NONRAD	INORG	Vanadium	V	SOIL	Plant
NONRAD	INORG	Zinc	ZN	SOIL	Plant
NONRAD	PAH	Acenaphthene	83-32-9	SOIL	Plant
NONRAD	PAH	Benzo(a)anthracene	56-55-3	SOIL	Plant
NONRAD	PAH	Benzo(b)fluoranthene	205-99-2	SOIL	Plant
NONRAD	PCB	Aroclor-1254	11097-69-1	SOIL	Plant
NONRAD	PEST	BHC[gamma-]	58-89-9	SOIL	Plant
NONRAD	PEST	Chlordane[alpha-]	5103-71-9	SOIL	Plant
NONRAD	PEST	Chlordane[gamma-]	5103-74-2	SOIL	Plant
NONRAD	PEST	Dieldrin	60-57-1	SOIL	Plant
NONRAD	PEST	Endrin	72-20-8	SOIL	Plant
NONRAD	PEST	Heptachlor	76-44-8	SOIL	Plant
NONRAD	SVOC	Dibenzofuran	132-64-9	SOIL	Plant
NONRAD	SVOC	Di-n-Butyl Phthalate	84-74-2	SOIL	Plant
NONRAD	SVOC	Pentachlorophenol	87-86-5	SOIL	Plant
NONRAD	SVOC	Phenol	108-95-2	SOIL	Plant
NONRAD	VOC	Methylene Chloride	75-09-2	SOIL	Plant
NONRAD	VOC	Toluene	108-88-3	SOIL	Plant
NONRAD	VOC	Xylene (Total)	1330-20-7	SOIL	Plant
RAD	RAD	Americium-241	AM-241	SOIL	Plant
RAD	RAD	Cesium-134	CS-134	SOIL	Plant

Table 5. Beta Release (October 1998) List of Soil ESLs for Generic Plant Receptor					
Analyte Class	**Analyte Class**	**Analyte Class**	**Analyte Class**	**Analyte Class**	**Analyte Class**
RAD	RAD	Cesium-137 + Barium-137	CS-137/ BA-137	SOIL	Plant
RAD	RAD	Cobalt-60	CO-60	SOIL	Plant
RAD	RAD	Europium-152	EU-152	SOIL	Plant
RAD	RAD	Plutonium-238	PU-238	SOIL	Plant
RAD	RAD	Plutonium-239, 240	PU-239/240	SOIL	Plant
RAD	RAD	Plutonium-241	PU-241	SOIL	Plant
RAD	RAD	Radium-226	RA-226	SOIL	Plant
RAD	RAD	Sodium-22	NA-22	SOIL	Plant
RAD	RAD	Strontium-90 + Yittrium-90	SR-90/ Y-90	SOIL	Plant
RAD	RAD	Thorium-228	TH-228	SOIL	Plant
RAD	RAD	Thorium-230	TH-230	SOIL	Plant
RAD	RAD	Thorium-232	TH-232	SOIL	Plant
RAD	RAD	Tritium	H-3	SOIL	Plant
RAD	RAD	Uranium-234	U-234	SOIL	Plant
RAD	RAD	Uranium-235	U-235	SOIL	Plant
RAD	RAD	Uranium-238	U-238	SOIL	Plant

BACK TO TOP

Table 6. Beta Release (October 1998) List of Sediment and Water ESLs for Aquatic Community Organism Receptors					
Analyte Class	**Analyte Class**	**Analyte Class**	**Analyte Class**	**Analyte Class**	**Analyte Class**
RAD	RAD	Americium-241	AM-241	WATER and SEDIMENT	Aquatic
RAD	RAD	Cesium-137 + Barium-137	CS-137/ BA-137	WATER and SEDIMENT	Aquatic
RAD	RAD	Plutonium-238	PU-238	WATER and SEDIMENT	Aquatic
RAD	RAD	Plutonium-239, 240	PU-239/240	WATER and SEDIMENT	Aquatic
RAD	RAD	Plutonium-241	PU-241	WATER and SEDIMENT	Aquatic
RAD	RAD	Radium-226	RA-226	WATER and SEDIMENT	Aquatic
RAD	RAD	Strontium-90 + Yittrium-90	SR-90/ Y-90	WATER and SEDIMENT	Aquatic
RAD	RAD	Thorium-232	TH-232	WATER and SEDIMENT	Aquatic
RAD	RAD	Tritium	H-3	WATER and SEDIMENT	Aquatic
RAD	RAD	Uranium-234	U-234	WATER and	Aquatic

Table 6. Beta Release (October 1998) List of Sediment and Water ESLs for Aquatic Community Organism Receptors					
Analyte Class	**Analyte Class**	**Analyte Class**	**Analyte Class**	**Analyte Class**	**Analyte Class**
				SEDIMENT	
RAD	RAD	Uranium-235	U-235	WATER and SEDIMENT	Aquatic
RAD	RAD	Uranium-238	U-238	WATER and SEDIMENT	Aquatic

BACK TO TOP

References

Ecorisk Database REF ID 0561
United States Environmental Protection Agency (USEPA). 1993h. Wildlife Exposure Factors Handbook, Vol. I and II. EPA/600/R-93/187. United States Environmental Protection Agency.

Ecorisk Database REF ID 1484
Newell, PG. 1999 (Dec.). Revisions to Ecorisk Database R.1 ESLs. Los Alamos National Laboratory, Environmental Restoration Project, Los Alamos National Laboratory, Los Alamos, NM.

BACK TO TOP

Los Alamos National Laboratory

Environmental Stewardship Division

Environmental Remediation and Surveillance Program

Ecorisk Database Release 2.2 (September 2005)

TRV DEVELOPMENT METHODS:

USING THE GEOMETRIC MEAN

DRAFT

September 1, 2004

TABLE OF CONTENTS

Introduction 4

Deriving chronic NOAEL (NOEC)-based ELs 4

Assessing the distribution of the GMM TRV data set 4

Types of Distributions 5

Geometric Standard Deviations and Outliers 5

Comparing the GMM TRV to the LOAEL (LOEC)-based ELs 6

Deriving chronic LOAEL (LOEC)-based ELs 6

Explanation of LOAEL (LOEC)/NOAEL (NOEC) Ratios 6

Comparing the GMM TRV to other Published TRVs 7

Scoring Criteria and Confidence Ratings 7

Confidence Rating System Structure 7

Justification for Scoring and Weighting Factor Levels 9

Number of Experiments 9

Type of Exposure Medium 10

Number of Test Organism Orders 10

Number of Unique Measurements (Endpoints) 11

Type of Endpoint Category 11

Number and Type of Effect Levels of PTVs Associated with the Individual NOAEL (NOEC)-based ELs in the GMM TRV Data Set 12

Confidence Rating of PTVs Associated with the Individual NOAEL (NOEC)-based ELs in GMM TRV Data Set 12

Outliers(s) in the Chronic NOAEL (NOEC)-based EL Distribution 13

Chronic NOAEL (NOEC)-based EL Distribution is Bimodal 13

Relationship of GMM TRV to chronic LOAEL (LOEC)-based ELs 14

Relationship of GMM TRV to other published TRVs 14

Tables and Graphs for GMM TRV Data Set Information 15

LIST OF TABLES

Table 1. Weighting Factor Levels. 8

Table 2. Weighting Factor Levels Assigned to Evaluation Categories. 8

Table 3. Confidence Ratings. 9

Table 4. UF Descriptions. 15

Table 5. Acronyms. 15

Introduction

The ideal GMM TRV* for ecological risk screening assessments is one that is based on a data set representing the most ecologically relevant endpoints (reproduction/development), exposure routes (birds and mammals: oral ingestion via food or drinking water; mammals: inhalation; plants: uptake via seed coat and/or roots; or invertebrates: oral and dermal exposure), exposure media (birds and mammals: food, drinking water, air; plants and invertebrates: soil), exposure period (chronic), and effect levels (NOAEL for birds and mammals or NOEC for plants and invertebrates). A GMM TRV based on these characteristics is protective of wildlife, plant, and invertebrate populations and sensitive individuals because it represents an exposure that is not associated with adverse impacts of low-level, long-term chemical effects (i.e., adverse effects on ability of individuals to develop into viable organisms, search for mates, breed successfully, and produce live and equally viable offspring).

The GMM TRV is derived from a data set of chronic NOAEL (NOEC)-based ELs (see the **Deriving chronic NOAEL (NOEC)-based ELs** section). The suitability of the GMM TRV for the chemical and ecological screening receptor of concern is determined by the following assessments (1) examining the distribution of its data set (see the **Assessing the distribution of the GMM TRV data set** section), (2) comparing it to the lowest chronic LOAEL (LOEC)-based EL derived from the GMM TRV data set (see the **Comparing the GMM TRV to the LOAEL (LOEC)-based ELs** section), and (3) comparing it to TRVs derived by other organizations, if available (see the **Comparing the GMM TRV to other Published TRVs** section). The information gathered from the assessments is used to assign the GMM TRV a confidence rating by scoring various aspects of each of the assessments on how well they meet the ideal GMM TRV criteria (see the **Scoring Criteria and Confidence Ratings** section). Summary tables and graphs are provided in the specific GMM TRV Summary reports for easier distillation of information contained within the GMM TRV data set (see the **Tables and Graphs for GMM TRV Data Set Information** section).

*See the **Acronyms** table (Table 5) for definitions of all acronyms and abbreviations.

Deriving chronic NOAEL (NOEC)-based ELs

The data set used to calculate the GMM TRV (see the **Calculations** section in the specific GMM TRV Summary Report) contains a variety of effect levels (PTVs derived from the PTSE Process as described in Ref ID 1487) ranging from chronic NOAEL (NOEC)/LOAEL (LOEC) pairs to acute, other effect levels such as LC50s or EC20s. The GMM TRV is calculated using chronic NOAEL (NOEC)-based ELs that are either chronic NOAELs (NOECs) or derived from other effect levels. If the effect level (PTV) is an acute or subchronic NOAEL (NOEC), it is extrapolated to a chronic NOAEL (NOEC)-based EL with the application of a UF. If the PTV is a LOAEL (LOEC) or other EL (LC50), it is first extrapolated to a NOAEL with the application of a UF, and then it is extrapolated to a chronic exposure duration if needed. See the **UFs Description** table (Table 4).

Assessing the distribution of the GMM TRV data set

The data set of chronic NOAEL (NOEC)-based ELs is evaluated to determine the type of distribution (e.g., normal, positively skewed, negatively skewed, bimodal) and the variance of the distribution based on the number of GSDs from the GMM. Also, any ELs that may appear to be outliers are discussed (see the *Geometric Standard Deviations and Outliers* section). The

distribution is also evaluated for patterns or trends based on test organisms, exposure durations, original effect level types, or endpoint categories. The distribution and patterns of the ELs in the GMM TRV data set are discussed in the **Data Set Distribution Comments** section and presented in the **Graph of NOAEL-based ELs**, both which can be found in the specific GMM TRV Summary Report**.** The experiment details such as exposure duration, test organism, and original effect level are presented in the **PTVs Considered** table in the specific GMM TRV Summary Report.

Types of Distributions

If the distribution is negatively skewed, there are a larger number of higher values which most likely represent chronic or C-CL NOAELs (NOECs) for ecologically relevant endpoints; therefore, the GMM TRV is influenced by them and more likely to approximate a true NOAEL (NOEC). A negatively skewed distribution, in the purpose of a GMM TRV, is preferred because of this. On the other hand, if the GMM TRV belongs to a positively skewed distribution, this means it is usually biased towards the lower values of the distribution and is therefore protective of the higher ones which are usually associated with chronic or C-CL NOAELs (NOECs). For this reason, a positively skewed distribution is also acceptable because the GMM TRV is overly conservative due to the large number of lower values extrapolated from original effect levels other than chronic NOAELs (NOECs). If the distribution shows a bimodal pattern, this indicates there are two clusters of values according to test organisms, original effect levels, exposure durations, and/or endpoint categories. For example, there may be a large group of ELs associated with acute and subchronic values and another large group of ELs associated with chronic and C-CL values. It becomes difficult to determine if the GMM TRV is appropriate in this case. Revision of the GMM TRV to a subset GMM TRV may be preferred in order to represent the group of values that is more ecologically relevant (e.g., the chronic and C-CL values, which are more likely to represent more ecologically relevant endpoints such as R/D effects).

Geometric Standard Deviations and Outliers

Because the TRV is based on a geometric mean, the spread of data is assessed by calculating the GSD of the GMM TRV. GSDs and outliers are discussed in the assessment of data set distributions in order to 1) describe the variability of the data set, 2) outline any patterns associated with extreme values vs. those within 2 GSDs (e.g., outliers with high values may be associated with chronic durations while those values closer to the GMM are values extrapolated from original PTVs), and 3) provide support to the confidence rating of the GMM TRV where distributions with lower variance have higher confidence (i.e., GMM TRV is a better estimate of the no observed adverse effect level) vs. distributions having higher variance have lower confidence. Some researchers consider any values beyond 2 standard deviations extreme values, or outliers (Ref ID 1486). However, while outliers are described to be observations that do not exist within the characteristic distribution of the data, the decision to keep or remove an outlier often relies on professional judgment based on knowledge of the parameter being studied (Ref IDs 1485 and 1486). Therefore, in GMM TRV data sets, outliers are usable because they have been evaluated and screened in the same rigorous process as all other values derived via the PTSE process (Ref ID 1487). All ELs are based on PTVs derived from the PTSE Process and if a PTV was associated with a low confidence based on lack of or little supporting data, it was eliminated prior to the formulation of the data set used for the calculation of the GMM TRV.

Furthermore, ELs allowed in the data set that have larger values are often associated with chronic or C-CL PTVs whereas the lower ELs allowed in the data set were extrapolated from PTVs that were subchronic or acute NOAELs (NOECs), LOAELs (LOECs), or Other ELs (e.g., LD50s) with the use of UFs. The lower, extrapolated values are accepted in the GMM TRV data set because in screening level ecological risk assessments the use of a TRV that is overly protective, rather than under protective is preferred.

Comparing the GMM TRV to the LOAEL (LOEC)-based ELs

The GMM TRV is compared to the lowest chronic LOAEL (LOEC)-based EL derived from the GMM TRV data set (see the *Deriving chronic LOAEL (LOEC)-based ELs* section) in order to determine whether it may or may not be protective of the most sensitive endpoint in the data set. If it is below the lowest LOAEL (LOEC)-based EL, it is protective of all possible effects in the data set. However, it may be too far below the LOAEL (LOEC)-based EL and some consideration must be taken into account to determine whether or not it is overly protective. On the other hand, if the GMM TRV is above the LOAEL (LOEC)-based EL, further investigation is needed to determine if the GMM TRV may not be protective enough. Examples of information to examine include what endpoint the LOAEL (LOEC) or LOAEL (LOEC)-based EL represents, whether it is more or less ecologically relevant than other endpoints in the data set, if there are other similar endpoints available and how their ELs compare to the GMM TRV, and what original effect level was used to approximate the LOAEL (LOEC)-based EL. The application of UFs may have made the chronic LOAEL (LOEC)-based EL overly conservative; therefore, the GMM TRV may still be protective even though it is above the LOAEL (LOEC)-based EL. This is further strengthened if it can be shown that the GMM TRV includes more ecologically relevant endpoints and chronic exposure durations. The comparison is discussed in the **Lowest LOAEL (LOEC) Comparison** section and presented in the **Graph of LOAEL (LOEC)-based ELs**, both which can be found in the specific GMM TRV Summary Report. Experiment details such as exposure duration, test organism, and original effect level are presented in the **PTVs Considered** table in the specific GMM TRV Summary Report.

Deriving chronic LOAEL (LOEC)-based ELs

The data set may contain a variety of effect levels (PTVs derived from the PTSE Process as described in Ref ID 1487) ranging from chronic NOAEL (NOEC)/LOAEL (LOEC) pairs to acute, other effect levels such as LC50s or EC20s. The extrapolation of NOAELs (NOECs) and other effect levels to chronic LOAEL (LOEC)-based ELs is done to maximize the number of data points that can be compared to the GMM TRV. If the original effect level (PTV) is not a chronic LOAEL (LOEC), it is extrapolated to a chronic LOAEL (LOEC)-based EL by applying standard UFs (see Table 4) or NOAEL (NOEC) to LOAEL (LOEC) ratios that are specific to the exposure scenario of concern (i.e., exposure route, exposure medium, and ecological receptor) See *Explanation of LOAEL (LOEC)/NOAEL (NOEC) Ratios*

Explanation of LOAEL (LOEC)/NOAEL (NOEC) Ratios

If only a chronic NOAEL (NOEC) or chronic NOAEL (NOEC)-based EL extrapolated from an acute or subchronic NOAEL (NOEC) is available, a factor must be applied to derive a LOAEL (LOEC)-based EL from this value. Based on Dourson and Stara (1983; Ref ID 1379), 96% of the ratios between NOAELs (NOECs) and LOAELs (LOECs) for mammals in oral ingestion experiments have values of 5 or less (page 232 and figure 4). However, because this data is only

applicable to oral ingestion exposure in mammals, ratios for the remaining exposure pathways (oral ingestion in birds, oral ingestion and dermal contact in earthworms, uptake via seed coats and/or roots, and inhalation in mammals) were determined from NOAEL (NOEC)/LOAEL (LOEC) pairs specific to each of the exposure pathways. The data used to develop the ratios is from the Ecorisk Database. The smallest and largest ratios developed for each exposure pathway were used to approximate a minimum and maximum LOAEL (LOEC)-based EL, in order to bracket a range of concentrations at which the adverse effects may first be observed. The **PTVs Considered** table in the specific GMM TRV Summary Report presents this data.

Comparing the GMM TRV to other Published TRVs

The GMM TRV is compared to TRVs from other organizations in order to present all available data and to ensure the validity of the GMM TRV in light of this other data. See **LANL CS TRV, ORNL CS TRV, USEPA R6 CS TRV,** and **SNL CS TRV Comparison** sections in the specific GMM TRV Summary Report.

Scoring Criteria and Confidence Ratings

A confidence rating for the GMM TRV indicates how well the GMM TRV represents the ideal GMM TRV, which is representative of the true TRV. The true TRV is the dose rate or concentration that is equivalent to a no adverse effect level for population level effects (i.e., decreased population size) for a particular receptor under a specific exposure scenario to a particular chemical in the real world. The confidence rating for the GMM TRV is based on how well the GMM TRV meets various criteria within specific evaluation categories. A weighted scoring system based on the degree of influence each evaluation category has on the GMM TRV is used to assess the validity of the GMM TRV for estimating the true TRV. The following sections describe the structure of the confidence rating system including descriptions and justifications for the evaluation processes used to assign the confidence ratings.

Confidence Rating System Structure

The first step in assigning a confidence rating to a GMM TRV is to assign a score for each evaluation category listed below. Each evaluation category contains individual criterion associated with ranked scores that reflect how well the GMM TRV data set being evaluated represents the characteristics of the ideal GMM TRV. The higher the score, the better the GMM TRV represents the ideal GMM TRV and thus the true TRV. The possible scores for each evaluation category are presented in *GMM TRV Scoring Criteria_R6b.xls* and the justifications for the scores are presented in the *Justification for Scoring and Weighting Factor Levels* section.

Data Set Evaluation Categories:

1) Number of Experiments
2) Type of Exposure Medium
3) Number of Test Organism Orders
4) Number of Unique Measurements (Endpoints)
5) Type of Endpoint Category
6) Number and Type of Effect Levels
7) Confidence Rating of PTVs Associated with Individual NOAEL (NOEC)-based ELs in GMM TRV Data Set
8) Outlier(s) in Chronic NOAEL (NOEC)-based EL Distribution

9) Chronic NOAEL (NOEC)-based EL Distribution is Bimodal
10) Relationship of GMM TRV to Chronic LOAEL (LOEC)-based ELs
11) Relationship of GMM TRV to Other Published TRVs.

The second step in assigning a confidence rating to a GMM TRV is to calculate a weighted score for each evaluation category by multiplying the individual scores of each evaluation category by the weighting factor of the evaluation category. The weighted score for each evaluation category is based on the weighting factor level assigned to the evaluation category. The weighting factor level is based on the degree of influence the evaluation category has on setting the GMM TRV. The higher the weighting factor, the greater the influence the evaluation category has on setting the GMM TRV. The possible weighting factor levels are presented in Table 1.

Table 1. Weighting Factor Levels.

Weighting Factor Level	Definition	Weighting Factor Applied
Critical	A low score for a critical evaluation category triggers re-investigation of the GMM TRV and possible revision or decision not to use.	2
Non-critical	A high score for a non-critical evaluation category indicates the GMM TRV data set is very robust, highly relevant to the scenario for which the TRV is being developed, or is based primarily on ELs that were not derived by applying UFs to PTVs. A low score rarely influences revision of GMM TRV because it is an added benefit if the evaluation category scores high, but not a requirement.	1

The third step in assigning a confidence rating to a GMM TRV is to calculate a total weighted score for the GMM TRV being evaluated. The total weighted score is equal to the sum of weighted scores of all 11 evaluation categories. The weighting factor levels assigned to each evaluation category are presented in Table 2 and the justifications for them are presented in the *Justification for Scoring and Weighting Factor Levels* section.

Table 2. Weighting Factor Levels Assigned to Evaluation Categories.

Evaluation Category	Weighting Factor Level
Number of Experiments	Non-critical
Type of Exposure Medium	Non-critical
Number of Test Organisms Orders	Non-critical
Number of Unique Measurements (Endpoints)	Non-critical
Type of Endpoint Category	Non-critical
Number and Type of Effect Levels	Non-critical

Confidence Rating of PTVs Associated with Individual NOAEL (NOEC)-based ELs in GMM TRV Data Set	Non-critical
Outlier(s) in Chronic NOAEL (NOEC)-based EL Distribution	Critical
Chronic NOAEL (NOEC)-based EL Distribution is Bimodal	Critical
Relationship of GMM TRV to Chronic LOAEL (LOEC)-based ELs	Critical
Relationship of GMM TRV to Other Published TRVs.	Critical

The fourth step in assigning a confidence rating to a GMM TRV is to determine the percentage the total weighted score is of the maximum total weighted score for the evaluation (i.e., 36.5 points based on summing the highest scores from each evaluation category). The percentage the total weighted score is of the maximum total weighted score is the ultimate basis for assigning the confidence rating of a GMM TRV. Table 3 presents the possible confidence ratings and the corresponding percentage of the maximum total weighted score and the equivalent total weighted score.

Table 3. Confidence Ratings.

Confidence Rating	**% of Maximum Total Weighted Score (%MTWS)**	**Equivalent Total Weighted Score (ETWS)**
High	%MWTS ≥ 75%	27.375 ≤ ETWS ≤ 36.5
Medium	50% ≤ %MTWS < 75%	18.25 ≤ ETWS < 27.375
Low	25% ≤ %MTWS < 50%	9.125 ≤ ETWS < 18.25
Unacceptable	%MTWS ≤ 25%	ETWS ≤ 9.125

Justification for Scoring and Weighting Factor Levels
The following sections provide the justification for the scoring criteria and weighting factor levels of each evaluation category.

Number of Experiments

Justification for Scoring:
The preference is to have a high number of experiments because this reduces the potential for the data set to be biased toward a particular study design. Based on best professional judgment, 10 experiments are considered to provide a more than adequate representation of the toxicity of a chemical for the test organism group of concern. Four to 9 experiments are considered to provide an adequate representation while 3 or fewer experiments are considered to provide a minimal representation of the toxicity of a chemical for the test organism group of concern.

Justification for Weighting Factor Level:
This evaluation category is given a **Non-critical** weighting factor level. This evaluation category has a strong relationship to the robustness of the data set and its ability to represent the ideal GMM TRV; thus the true TRV is estimated. The higher the number of experiments, the more robust the data set. This evaluation category is not, however, a

primary factor for determining whether or not the GMM TRV should be used because a high number of experiments in the data set is not a requirement, but rather an additional benefit for assessing confidence in the TRV.

Type of Exposure Medium

Justification for Scoring:
The preference is for all the ELs in the data set to be associated with an exposure medium that is equivalent to the exposure medium of concern. However, if the data set is limited (i.e., less than 3 ELs for a particular exposure medium), ELs that have an appropriate surrogate exposure medium (i.e., exposure medium that has the same exposure route as the exposure route of concern) may be used to supplement the data set so that a GMM TRV can be derived. For example, for an oral ingestion via food TRV only food ELs should be used, but if the data set is limited, oral ingestion via drinking water ELs may be used to supplement the data set so that a GMM TRV may be calculated.

Justification for Weighting Factor Level:
This category is given a **Non-critical** weighting factor level. This evaluation category indicates the degree of relevance the data set has to the TRV that is being developed. The higher the degree of relevance, the more closely the GMM TRV represents the ideal GMM TRV; thus the true TRV is estimated. This evaluation category is not, however, a primary factor for determining whether or not the GMM TRV should be used because an exact match on the exposure medium for which the TRV is being developed is not a requirement, but rather an additional benefit for assessing confidence in the TRV. Only the exposure route must match the exposure for which the TRV is being developed. However, the toxicity can vary greatly in different exposure media due to the differences in bioavailability of the chemical in one compared to the other. Therefore, a complete match on the exposure medium is preferred to be able to more accurately estimate the true TRV.

Number of Test Organism Orders

Justification for Scoring:
The preference is to have a high number of test organism orders because this reduces the potential for the data set to be biased toward one order of test organisms. The scoring criteria are based upon the USACHPPM guidance that states that having at least 2 different taxonomic orders in a TRV data set helps define the quality of the data set (Ref ID 1481).

Justification for Weighting Factor Level:
This category is given a **Non-critical** weighting factor level. This evaluation category has a strong relationship to the robustness of the data set and its ability to represent the ideal GMM TRV; thus the true TRV is estimated. The higher the number of test organism orders, the more robust the data set. This evaluation category is not, however, a primary factor for determining whether or not the GMM TRV should be used because a high number of test organism orders in the data set is not a requirement, but rather an additional benefit for assessing confidence in the TRV.

Number of Unique Measurements (Endpoints)

Justification for Scoring:
The preference is to have a high number of unique measurements (endpoints) because this reduces the potential for the data set to be biased toward one type of toxicological effect. Unique measurements are those that represent different parameters of measurement for an endpoint category. For example, the endpoints of "Mortality" and "LC50" may both be categorized as S endpoints because they are both measurements of survival/mortality, but they are each considered a unique measurement because they measure different aspects of survival/mortality. Based on best professional judgment, more than 3 unique measurements are considered to provide a more than adequate representation of the toxicity of a chemical for the test organism group of concern. Three unique measurements are considered to provide an adequate representation while fewer than 3 unique measurements are considered to provide a minimal representation of the toxicity of a chemical for the test organism group of concern.

Justification for Weighting Factor Level:
This category is given a **Non-critical** weighting factor level. This evaluation category is related to the robustness of the data set and its ability to represent the ideal GMM TRV; thus the true TRV is estimated. The higher the number of unique measurements, the more robust the data set. This evaluation category is not, however, a primary factor for determining whether or not the GMM TRV should be used because a high number of unique measurements in the data set is not a requirement, but rather an additional benefit for assessing the validity of the GMM to estimate the true TRV. Furthermore, all the unique measurements that are allowed in the data set are by definition relevant to the TRV being developed for population effects. The relevance of the endpoint category of each unique measurement is scored separately under *Type of Endpoint Category*.

Type of Endpoint Category

Justification for Scoring:
The preference is to have more reproduction and development endpoints followed by survival endpoints and then by adult body weight or size change endpoints because the first category of endpoints is the most ecologically relevant group for determining long-term effects on populations followed by the second and third category.

Justification for Weighting Factor Level
This category is given a **Non-critical** weighting factor level. This evaluation category indicates the degree of relevance the data set has to the effects of concern, population level effects, for which the GMM TRV is being developed. The higher the degree of relevance, the more closely the GMM TRV represents the ideal GMM TRV; thus the true TRV is estimated. This evaluation category is not, however, a primary factor for determining whether or not the GMM TRV should be used because all the endpoint categories considered are ecologically relevant by definition. However, reproduction or development endpoints can more closely approximate population level effects, so having more endpoints in this

category is an added benefit for assessing the validity of the GMM TRV for estimating the true TRV.

Number and Type of Effect Levels of PTVs Associated with the Individual NOAEL (NOEC)-based ELs in the GMM TRV Data Set

Justification for Scoring:
The preference is to have chronic NOAELs (NOECs) with LOAELs (LOECs), followed by chronic NOAELs (NOECs) without LOAELs (LOECs), then by subchronic NOAELs (NOECs) with LOAELs (LOECs), then by subchronic NOAELs (NOECs) without LOAELs (LOECs) and finally by all other ELs. This hierarchy is based on two factors. One factor is whether or not UFs have to be applied to a PTV to extrapolate to a chronic NOAEL (NOEC). Extrapolated values are less preferred because they may be overly conservative, thus less representative of the actual chronic NOAEL (NOEC). The second factor is whether or not there are any NOAELs (NOECs) with accompanying LOAELs (LOECs). NOAELs (NOECs) with LOAEALs (LOECs) are most preferred because these values bracket the range of possible effects better than just a NOAEL (NOEC) or just a LOAEL (LOEC) alone.

Justification for Weighting Factor Level:
This category is given a **Non-critical** weighting factor level. This evaluation category is directly related to the certainty in the GMM TRV. The more ELs in the GMM TRV data set that were extrapolated to chronic NOAEL (NOEC)-based ELs by applying UFs, the greater the level of conservatism that is built into the GMM TRV. Even though being overly conservative is acceptable for screening level ecological risk assessments, it is preferred that TRVs not be overly conservative if more certain data is available. On the other hand, the higher the number of original ELs that are chronic NOAELs (NOECs) in the GMM TRV data set, the higher the confidence that the GMM TRV represents the ideal GMM TRV and thus estimates the true TRV (chronic no observed adverse effect level). A high score in this evaluation category is not required, but is an additional benefit for assessing confidence in the TRV.

Confidence Rating of PTVs Associated with the Individual NOAEL (NOEC)-based ELs in GMM TRV Data Set

Justification for Scoring:
The preference is to have more effect levels (PTVs) with high confidence ratings, followed by those with medium and then by low. A PTV confidence rating indicates to what degree the PTV is ecologically relevant, defensible and well documented based on the PTSE Part 2 Study Evaluation criteria (See Ref ID 1487). Effect levels associated with a low confidence rating are not included in the data set unless the data set is limited (i.e., less than 3 ELs based on PTVs with either a High or Medium confidence rating.).

Justification for Weighting Factor Level:
This category is given a **Non-critical** weighting factor level. This evaluation category indicates the degree of relevance the data set has to the TRV that is being developed. The higher the degree of relevance, the more closely the GMM TRV represents the ideal GMM

TRV; thus the true TRV is estimated. The PTV confidence rating is based upon scoring various study elements that are considered to be relevant for developing a scientifically defensible and ecologically relevant TRV. A high PTV confidence rating indicates the value is highly relevant for deriving a TRV and more likely to accurately estimate the true TRV.

Outliers(s) in the Chronic NOAEL (NOEC)-based EL Distribution

Justification for Scoring:
The data set cannot have invalid outliers (i.e., values associated with error or study designs that do not meet the minimum requirements for deriving a TRV). Invalid outliers must be removed from the data set prior to calculation of the GMM TRV. An invalid outlier is determined by a low confidence rating of a PTV associated with an EL in the data set. However, valid outliers, or extreme values, are allowed (e.g. sensitive species) as long as the data set is not bimodal (see *the Chronic NOAEL (NOEC)-based EL Distribution is Bimodal* section). The GSD is used to determine the variance of the GMM TRV. A lower variance (smaller GSD) indicates that the GMM TRV is more likely to represent the ideal GMM TRV and thus more accurately estimate the true TRV while a high variance (higher GSD) indicates that the GMM TRV is less likely to represent the ideal GMM TRV and thus less accurately estimate the true TRV. In most cases of high variance, the GMM TRV may be overly conservative because the large variance in the values is a result of the averaging of ELs that are based on PTVs other than chronic NOAELs (NOECs) and the application of UFs to extrapolate these values to chronic NOAEL (NOEC)-based ELs. A data set that contains both the smaller, extrapolated values and the non-extrapolated values (i.e., original effect levels that were already chronic NOAELs (NOECs)), leads to a high variance.

Justification for Weighting Factor Level:
This category is given a **Critical** weighting factor level. This evaluation category represents the variance of the GMM TRV dataset, which is important because it indicates how well the GMM TRV represents the ideal GMM TRV; thus how well the GMM TRV estimates the true TRV, which is directly related to the confidence in the GMM TRV. Low variance equals high confidence. High variance equals low confidence and may require reconsideration of the GMM TRV.

Chronic NOAEL (NOEC)-based EL Distribution is Bimodal

Justification for Scoring:
The preference is for the GMM TRV data set not to have a bimodal distribution. A bimodal distribution is determined based on 2 distinct clusters of values associated with different test species, original exposure durations, original effect levels or endpoint categories of each EL in the data set. If a data set is bimodal, best professional judgment must be used to determine if a subset GMM TRV(s) needs to be calculated or if the GMM TRV can be used as is.

Justification for Weighting Factor Level:
This category is given a **Critical** weighting factor level. This evaluation category has a large influence on whether or not the GMM TRV will be used. If the GMM TRV data set is found

to have a bimodal distribution, the GMM TRV may need to be revised in order to represent the most sensitive and/or ecologically relevant distribution (E.g., One distinct cluster is rodent (omnivore) data while the other is mink (carnivore) data. A TRV calculated from rodent data is more appropriate for the omnivorous deer mouse ESL receptors, while a TRV calculated from the mink is more appropriate for carnivorous red fox ESL receptor.)

Relationship of GMM TRV to chronic LOAEL (LOEC)-based ELs

Justification for Scoring:
The preference is that the GMM TRV be below the lowest chronic LOAEL (LOEC)-based EL because that indicates that it is protective of the most sensitive adverse effect in the data set. If the GMM TRV is not below the lowest chronic LOAEL (LOEC)-based EL, the next preference is for it to be no more than 3 times higher than a chronic LOAEL (LOEC)-based EL based on a chronic or C-CL LOAEL (LOEC) for an R/D or less ecologically relevant endpoint. Next preference is that the GMM TRV is not more than 3 times higher than a chronic LOAEL (LOEC)-based EL extrapolated from an original effect level other than a LOAEL. Because some of the chronic LOAEL (LOEC)-based ELs are extrapolated from NOAELs (NOECs) or other effect levels by applying UFs, they may be overly conservative and not represent the true chronic LOAELs (LOECs) for particular endpoints. In such cases, the GMM TRV is considered adequately protective due to the conservatism built into the extrapolated chronic LOAEL (LOEC)-based ELs. Furthermore, the GMM TRV may be considered adequately protective, if it is below the chronic LOAEL (LOEC)-based ELs for the most ecologically relevant endpoints (reproduction and development) even though it may exceed the lowest chronic LOAEL (LOEC)-based EL for an adult body weight or size change endpoint or for a survival endpoint. Another consideration is to determine based on best professional judgment whether or not the GMM TRV is unacceptably higher or lower than the lowest chronic LOAEL (LOEC)-based EL. If the difference is unacceptable, further investigation is warranted to determine if the GMM TRV is inappropriate (i.e., unacceptably over or under conservative). If it is found to be unacceptable, then the GMM TRV may need to be revised.

Justification for Weighting Factor Level:
This category is given a **Critical** weighting factor level. This evaluation category has a large influence on whether or not the GMM TRV will be used. If the difference between the GMM TRV and the lowest chronic LOAEL (LOEC)-based EL is unacceptable, the GMM TRV is unacceptable and an alternative (e.g., a subset GMM TRV, CS TRV) must be sought.

Relationship of GMM TRV to other published TRVs

Justification for Scoring:
It is preferred that any differences between the GMM TRV and other published TRVs be explainable on the basis of the experiments, endpoints, test organisms, and test chemical forms, etc., considered. It is also important that the explanation provide support for or against the use of the GMM TRV. Also to be verified is that the GMM TRV has considered all relevant data. If relevant data has not been considered, the GMM TRV data set may need

to be expanded to include the missing data. If no published TRVs are available for comparison, the GMM TRV is considered to be acceptable.

Justification for Weighting Factor Level:
This category is given a **Critical** weighting factor level. This evaluation category has a large influence on whether or not the GMM TRV will be used. If differences between the GMM TRV and other published TRVs are unacceptable (i.e., unexplainable, error based or lack of data based), the GMM TRV is unacceptable and an alternative (e.g., subset GMM TRV, CS TRV) needs to be considered

Tables and Graphs for GMM TRV Data Set Information
For easier presentation of the data in support of the GMM TRV, the following tables are included in the specific GMM TRV Summary Report: **PTVs Considered**, **Test Organisms**, and **Original Effect Level Types**. The **Graph of NOAEL-based ELs** and **Graph of LOAEL-based ELs** are also included for illustration of the data. In the graphs, the x-axis labels contain coding that indicates the original exposure durations, effect levels, endpoint categories, and test organisms from which the NOAEL (NOEC)- or LOAEL (LOEC)-based ELs are approximated. For example, if a data point is associated with the label "SC L WC Rat" in a NOAEL-based ELs graph, this label indicates that the value is a NOAEL-based EL approximated from a subchronic (SC) LOAEL (L) for weight change (WC) in the rat. Finally, it should be noted that when minimum and maximum LOAEL-based ELs are approximated, the minimum LOAEL-based ELs are used in the graph for LOAEL (LOEC)-based ELs.

Table 4. UF Descriptions.

	UF applied to derive a TRV that is:	
Type of effect level available	Chronic NOAEL-based	Chronic LOAEL-based
C-CL or chronic NOAEL	1	N/A
C-CL or chronic LOAEL	10	1
C-CL or chronic LD50 (or LC50)	100	10
C-CL or chronic ED50 (or EC50)	100	10
Subchronic NOAEL	10	N/A
Subchronic LOAEL	100	10
Subchronic LD50 (or LC50)	100	100
Subchronic ED50 (or EC50)	100	100
Acute or single dose NOAEL	100	N/A
Acute or single dose LOAEL	100	100
Acute or single dose LD50 (or LC50)	100	100
Acute or single dose ED50 (or EC50)	100	100

Table 5. Acronyms.

Acronym	**Word/Phrase**
A	Acute

Acronym	Word/Phrase
AIR	Air
ALL	All
B	Bird
C	Chronic
C-CL	Chronic - Critical Lifestage
CS	Critical Study
D/F	Dioxin/ Furan
DW	Drinking Water exposure medium
DW+F	Drinking water exposure medium plus additional exposure to background in food
EC10	Effective Concentration for 10% of population
EC20	Effective Concentration for 20% of population
EC50	Median Effective Concentration (for 50% of population)
EL	Effect Level
ESL	Ecological Screening Level
F	Food exposure medium
F&DW	Food and drinking water exposure media
F&DW&O	Food and drinking water and other exposure media
F+DW	Food exposure medium plus additional exposure to background in drinking water
GMM	Geometric Mean
GP	Generic plant (Terrestrial autotroph - producer)
GSD	Geometric Standard Deviation
HE	High Explosive
I	Invertebrate
INH	Inhalation exposure route
INORG	Inorganic Compound
L	LOAEL or LOEC
LANL	Los Alamos National Laboratory
LC10	Lethal Concentration for 10% of population
LC20	Lethal Concentration for 20% of population
LC50	Median Lethal Concentration (for 50% of population)
LOAEL	Lowest Observed Adverse Effect Level
LOEC	Lowest Observed Effect Concentration
LOEL	Lowest Observed Effect Level
M	Mammal
N	NOAEL or NOEC
N/A	Not Applicable
NL	NOAEL (or NOEC) and LOAEL (or LOEC)
NLOTH	NOAEL (or NOEC), LOAEL (or LOEC), and other effect level (e.g., LC50, EC50)
NMED	New Mexico Environment Department, inter- and intrastate stream standards
NOAEL	No Observed Adverse Effect Level
NOEC	No Observed Effect Concentration

Acronym	Word/Phrase
NOEL	No Observed Effect Level
NOTH	NOAEL (or NOEC) and other effect level (e.g., LC50, EC50)
NR	Not Reported
OIL	Oil exposure medium
OIL_ACHS	Arachis oil exposure medium
OIL_CORN	Corn oil exposure medium
OIL_O	Other oil exposure medium
OIL_PNT	Peanut oil exposure medium
ORNL	Oak Ridge National Laboratory
OTH	Other
P	Plant
PCB	Polychlorinated Biphenyl
PEST	Pesticide
PTSE	Primary Toxicity Study Evaluation
PTV	Primary Toxicity Value
R/D	Reproduction and Development
R6	Region 6
Ref	Reference
RRES-R	Risk Reduction and Environmental Stewardship - Remediation program
S	Survival
SAND&OM	Sand and Organic Matter mixture exposure medium
SAND_CLTR	Sand culture exposure medium (Solution is washed through silver sand daily)
SC	Subchronic
SD	Single Dose
SLE	Soil and Litter Earthworm
SLERA	Screening Level Ecological Risk Assessment
SNL	Sandia National Laboratory
SOIL&MNU	Soil and Manure mixture exposure medium
SOIL&SAND	Soil and Sand mixture exposure medium
SOIL&SLDG	Soil and Sludge mixture exposure medium
SOLN_O	Other solution exposure medium (assumed)
SOLN_OIL	Oil solution exposure medium (assumed)
SVOC	Semivolatile Organic compound
SzC	Size Change
T&E	Threatened and Endangered (Species)
TB	Terrestrial bird
TM	Terrestrial mammal
TP	Terrestrial plant
TRV	Toxicity Reference Value
UF	Uncertainty Factor
UNK	Unknown
USEPA	United States Environmental Protection Agency
VOC	Volatile Organic Compound
W	Water

Acronym	Word/Phrase
WC	Weight Change

Derivation of chemical-specific TRVs for PAHs and DDT & metabolites

Objective

The objective of this process is to develop toxicity reference values (TRVs) for individual polycyclic aromatic hydrocarbons (PAHs) and DDT and metabolites utilizing the toxicity data published in 2007 by the Environmental Protection Agency's (EPA) Ecological Soil Screening Level (EcoSSL) workgroup. These TRVs are used to calculate Los Alamos National Laboratory (LANL)-specific receptor ecological screening levels (ESLs).

Background

The EPA EcoSSL workgroup reviewed the primary literature to develop TRVs and EcoSSLs for high and low molecular weight PAHs (Table 1). This class of organic compounds is grouped into two condensed aromatic ring structures with low molecular weight compounds composed of fewer than four rings and high molecular weight compounds composed of four or more rings. They also developed TRVs and EcoSSLs for DDT and metabolites as a group (Table 2).

In accordance with LANL SLERA methods, LANL generates TRVs for individual chemicals to be used to calculate LANL-specific receptor ecological screening levels (ESLs). Therefore, to remain consistent with the LANL screening level ecological risk assessment (SLERA) methods, the chemical-group TRVs/ ESLs derived by EPA were not adopted. LANL is, however, using the primary toxicity values for birds, mammals, plants and invertebrates (earthworms) for reproduction/ development, growth and survival endpoints that the EPA compiled with EcoSSL methodology to derive LANL TRVs and ESLs per LANL methods.

The EPA generates nationally-accepted EcoSSLs/TRVs through EcoSSL methodology and these toxicity values are considered to have high confidence compared to other sources. Therefore, the EcoSSL dataset is appropriate for use in the LANL Primary Toxicity Study Evaluation (PTSE) method, which is similar in many respects to the EcoSSL method. One notable exception is that LANL uses acute/ subacute and subchronic data by applying exposure duration uncertainty factors to extrapolate to a chronic effect level while EPA excludes these data, even if they have an expectable evaluation score otherwise, in order to focus their efforts on establishing a dose protective of most species from adverse effects associated with long term exposures and sublethal reproductive and growth effects. Another notable exception is that LANL utilizes reproduction/ development, growth and survival endpoints to calculate a TRV while EPA only uses the reproduction/ development and growth endpoints to calculate the TRV and then uses the survival endpoints in a comparative manner to evaluate the protectiveness of the TRV for lethality.

LANL has chosen to include along with chronic studies those of acute, subacute and subchronic duration and to utilize reproduction/ development, growth and survival endpoints to minimize data gaps for toxicological information for chemicals of potential ecological concern (COPECs) in the SLERA process.

The EPA primary toxicity values are used to augment existing LANL primary toxicity values compiled using the LANL PTSE method or to fill data gaps using the LANL PTSE method for LANL COPECs.

Methods

Data Acquisition:

- Primary toxicity values reported in the EPA EcoSSL reports for PAHs (USEPA, 2007a) and DDT and metabolites (USEPA, 2007b) were reviewed.

Data Coding – Effect Levels and Endpoints:

- Selected No effect levels (NOAELs/ NOECs), low effect levels (LOAELs/LOECs), median effect levels (ED50s/ EC50s) and median lethality effect levels (LD50s/LC50s) data for individual PAHs and DDT and metabolites that are LANL COPECs (Table 3) that represented reproduction/ development, growth, or survival endpoints were selected for use in the LANL TRV data set. See Table 4 for a description of endpoint group coding.

Data Coding - Handling of Repetitive Values:

- In the cases where LANL and EPA derived toxicity values from the same reference, the LANL derived value(s) is used. The exception to this rule is if the LANL value is associated with LANL tier 4 TRV data (Table 5). Tier 4 TRV data are not included because this type of toxicity data was taken from secondary data sources other than the nationally accepted EPA EcoSSL documents and is not considered appropriate for deriving higher tier LANL TRVs due to differences in the level of detail in documentation of the TRV derivation process compared to the LANL PTSE Method. Only tier 1, 2 and 3 TRV data are included in the LANL TRV data sets. Table 5 defines the LANL TRV tiers and their hierarchy for use in calculating TRVs/ ESLs.

- Only one effect type per reference per receptor/ COPEC pair is included in the data set. Best professional judgment is used to select the most ecologically relevant and/or sensitive value per ecologically relevant endpoint category per study/ reference. For example, if one experiment had 3 reproduction/development endpoints, 1 survival endpoint, and 1 adult growth endpoint, the most ecologically relevant and/or sensitive reproduction/development endpoint of the 3 available would be included in the data set along with the single survival and single growth change endpoints. This exclusion process minimizes the possibility of a TRV being skewed to the results of any particular study as a result of repetitive values for the same endpoint category within a study.

Normalization of toxicity values to chronic No Effect Levels:

- All toxicity values were normalized to chronic no effect levels (NOAELs/NOECs) using uncertainty factors (UFs) for differences in exposure duration (Table 6) and or effect level per LANL PTSE Methods. Table 7 indicates the UFs applied for various exposure durations and effect level combinations.

- One exposure duration classification that is used that is not necessarily based on the actual chemical administration period is the chronic – critical life stage (C-CL) designation. A C-CL endpoint is equivalent to a chronic exposure endpoint regardless of the actual chemical exposure duration associated with the endpoint because it is more likely to capture effects that reflect critical life stages that are relevant to population success. For the purpose of deriving TRVs, a critical life stage is defined as a life stage associated with a chemical exposure occurring during the reproductive cycle of the test organism and/or during the development of the immature test organism. For an endpoint to be considered development, it has to fall into one of two scenarios in which measurements must reflect either the development of immature organisms that were exposed via parents or the development of immature organisms directly exposed to the chemical.

Calculation of TRV:

- A Tier 2 geometric mean (GMM) TRV was calculated per LANL PTSE methods (Equation 1) when there were 3 or more primary toxicity values for a particular COPEC and receptor group. A critical study (CS) TRV was derived per LANL PTSE methods when there were less than 3 primary toxicity values for a particular COPEC and receptor group.

  Equation 1:
  GMM TRV = nth root of (EL1 x EL2 x EL3 x …ELn)
  where n is greater than or equal to 3 and each EL represents a chronic NOAEL-based EL for an oral ingestion exposure for an ecologically relevant effect (i.e., reproduction or development, survival or adult body weight or size changes)

Results (See individual TRV Summary Reports and supporting PTSE documentation nthe Ecorisk Database)
Table 8 contains TRVs generated through this process.

Summary
Based on the primary toxicity data available in the the EPA EcoSSL 2007 reports for PAHs (USEPA, 2007a) and DDT and metabolites (USEPA, 2007b), LANL was able to augment existing PTSE method derived data sets or fill LANL COPEC TRV data gaps for 10 COPEC/ receptor group pairs. GMM TRVs were derived for 2 high MW PAHs [benzo(a)pyrene/ mammal and pyrene/ invertebrate (earthworm)], 2 low MW PAHs [fluorene/ invertebrate (earthworm), naphthalene/ bird, and naphthalene/ mammal), DDD/ bird, DDD/ mammal, DDE/ bird, DDE/ mammal, DDT/ bird and DDT/ mammal.

References
United States Environmental Protection Agency (USEPA), 2007a (Jun.). Ecological Soil Screening Levels for Polycyclic Aromatic Hydrocarbons (PAHs), Interim Final. OSWER Directive 9285.7-78. US Environmental Protection Agency, Office of Solid Waste and Emergency Response, Washington, D.C.

United States Environmental Protection Agency (USEPA), 2007b (Apr.). Ecological Soil Screening Levels for DDT and Metabolites. OSWER Directive 9285.7-78. US Environmental Protection Agency, Office of Solid Waste and Emergency Response, Washington, D.C.

TABLES

Table 1. EPA EcoSSL TRVs for PAHs

Receptor	Low Molecular Weight TRV	High Molecular Weight TRV
Soil Invertebrate	29 mg/kg soil dry wt.	18 mg/kg soil dry wt.
Mammals	170 mg/kg/day	0.615 mg/kg/day
Birds	Not Available	Not Available
Plants	Not Available	Not Available

Table 2. EPA EcoSSL TRVs for DDT and Metabolites

Receptor	DDT& Metabolite TRV
Birds	0.227 mg/kg/day
Mammals	0.147 mg/kg/d
Soil Invertebrate	Not Available
Plants	Not Available

Table 3. EPA EcoSSL toxicity data for PAHs and DDT and metabolites that are LANL COPECs

MW	COPEC	Receptor Group
LMW	Anthracene	P
HMW	Benzo(a)pyrene	M
LMW	Fluoranthene	I
LMW	Fluorene	I
LMW	Naphthalene	M
LMW	Phenanthrene	I
HMW	Pyrene	I
NA	DDT[4,4'-]	B, M
NA	DDE[4,4'-]	B, M
NA	DDD[4,4'-]	B, M
B = bird, H= high, I = invertebrate, L = Low, M = mammal, MW = molecular weight, P = plant		

Table 4. LANL endpoint groups

Endpoint Group	Description
Reproduction/ development (R/D)	Development or mortality measured in juvenile organisms or immature plants that were exposed to the chemical through

	parental exposure because it is considered to be a measurement of the ability of the parents to produce offspring that can develop into reproductive adults. Also, growth of a juvenile organism or immature plant that was directly exposed to the chemical because it reflects the potential for the juvenile or immature plant to develop normally into a reproductive adult.
Survival (S)	Mortality in an adult organism or in a juvenile organism or immature plant directly exposed to the chemical because it is considered a measurement of the ability of the organism to survive to reproductive maturity.
Growth (G)	Weight change (WC) for mature organisms is measured or a change occurs in size (WSz) of a mature organism (e.g., height or root length of plants).

Table 5. LANL TRV tiers and hierarchy for use calculating ESLs

TRV Tier	Description	Hierarchy for Use
1	Nationally accepted TRV (e.g., EPA EcoSSL TRV)	First
2	Geometric Mean (GMM) TRV derived through the primary toxicity evaluation (PTSE) process	Second
3	Critical Study (CS) TRV derived through the primary toxicity evaluation (PTSE) process	Third
4	Secondary source TRV (e.g., ORNL, SNL)	Fourth

Table 6. Exposure Duration Categories and IDs for Birds, Mammals, Earthworms, and Plants

Duration	**Duration ID**	**Birds and Mammals**	**Earthworms and Plants**
Chronic	C	91 days or more	7 days or more
Chronic- critical life stage	C-CL	All R/D endpoints	
Subchronic	SC	14 to 90 days	3 to 6 days
Acute	A	13 days or less	2 days or less
Single dose	SD	One time administration	One time administration

Duration	Duration ID	Birds and Mammals	Earthworms and Plants
Not Reported	NR	Not applicable	Not applicable
R/D = reproduction/ development			

Table 7. Uncertainty Factors Applied to Derive Chronic NOAEL- or NOEC-based Effect Levels

Type of effect level available	UF applied to derive a TRV that is a Chronic NOAEL (NOEC)-based EL:
C-CL or C NOAEL (NOEC)	1
C-CL or C LOAEL (LOEC)	10
C-CL or C LD50 (LC50), ED50 (EC50)	100
SC NOAEL (NOEC)	10
SC LOAEL (LOEC), LD50 (LC50), ED50 (EC50)	100
A or SD NOAEL (NOEC)	100
A or SD LOAEL (LOEC), LD50 (LC50), ED50 (EC50)	100
A = Acute, C = chronic, C-CL = chronic – critical life stage, EC50 = median effective concentration (for 50% of the population), ED50 = median effective dose (for 50% of the population), LC50 = median lethal concentration (for 50% of the population), ED50 = median lethal dose (for 50% of the population), LOAEL = low observed adverse effect level, LOEC = low observed effect concentration, NOAEL = no observed adverse effect level, NOEC = no observed effect concentration, SC = subchronic, SD -= single dose	

Table 8. TRVs

MW	COPEC	Receptor Group	GMM TRV*	CS TRV*
LMW	Anthracene	P	6.88	-
HMW	Benzo(a)pyrene	M	5.58	-
LMW	Fluoranthene	I	10.2	-
LMW	Fluorene	I	3.7	-
LMW	Naphthalene	M	14.3	-
LMW	Phenanthrene	I	5.5	-
HMW	Pyrene	I	10.6	-
NA	DDD	B	0.016	-
NA	DDD	M	5.83	-
NA	DDE	B	0.48	-
NA	DDE	M	9.02	-
NA	DDT	B	2.01	-
NA	DDT	M	-	0.139
B = bird, COPEC = chemical of potential ecological concern, CS = critical study, GMM = geometric mean, H= high, I = invertebrate, L = Low, M =				

mammal, MW = molecular weight, N = number of toxicity values in data set, NA = not applicable, P = plant, TRV = toxicity, * units are mg/kg for receptor groups I and P and mg/kg/d for receptor groups B and M

LA-UR-10-4922
September 2010
EP2010-0279

Toxicity Reference Value Development Methods for the Los Alamos National Laboratory

Los Alamos
NATIONAL LABORATORY
EST. 1943

Prepared by the Environmental Programs Directorate

Los Alamos National Laboratory (LANL), operated by Los Alamos National Security (LANS), LLC, for the U.S. Department of Energy under Contract No. DE-AC52-06NA25396, has prepared this document. The public may copy and use this document without charge, provided that this notice and any statement of authorship are reproduced on all copies.

CONTENTS

1.0 INTRODUCTION 1

2.0 SUMMARY OF ESL DEVELOPMENT AND USE 1

2.1 Goals of the Risk Assessment Process at the Laboratory 2
2.2 The Screening Level Ecological Risk Assessment Process 2
2.3 Description of Ecological Screening Levels 2
2.4 Description of the Ecorisk Database 3
2.5 Annual Review and Update of ESLs and the Ecorisk Database 3
2.6 Interim and Surrogate ESLs/TRVs 3

3.0 SUMMARY OF TRV DEVELOPMENT 3

3.1 TRV 3
3.2 Definitionss 4
3.2.1 Ecologically Relevant Effects 4
3.2.2 Ecologically Relevant Media and Exposure Routes 4
3.2.3 Ecologically Relevant Test Organisms (species) 5
3.2.4 Exposure Duration Categories 5
3.2.5 Selection of Dose Calculation 5
3.2.6 Dose Calculation 6
3.2.7 Uncertainty Factors 6

4.0 TIERED TRV APPROACH 6

5.0 CONVERSION OF TRVs TO ESLs 7

6.0 OVERVIEW OF APPENDIX A 7

7.0 REFERENCES 8

Appendix

Appendix A Primary Toxicity Study Evaluation Methods Used to Develop Los Alamos National Laboratory Toxicity Reference Values

Acronyms and Abbreviations

COPC	chemical of potential concern
COPEC	chemical of potential ecological concern
CS	critical study
EP	Environmental Programs (Directorate)
EPA	U.S. Environmental Protection Agency
ESL	ecological screening level
HI	hazard index
HQ	hazard quotient
LANL or the Laboratory	Los Alamos National Laboratory

LC_{50}	lethal median concentration
LD_{50}	lethal median dose
LOAEL	lowest observed adverse effect level
LOEC	lowest observed effect concentration
NOAEL	no observed adverse effect level
NOEC	no observed effect concentration
PTSE	primary toxicity study evaluation
PTV	primary toxicity value
SLERA	screening-level ecological risk assessment
TRV	toxicity reference value

1.0 INTRODUCTION

This document details the process used to develop toxicity reference values (TRVs) for various chemical exposure pathways for selected wildlife at the Los Alamos National Laboratory (LANL or the Laboratory). These TRVs are used in ecological screening level (ESL) models representing the following exposure media for various chemicals to receptors.

- *Air.* Inhalation exposure pathway for burrowing mammals (volatile organic compounds only)
- *Soil and sediment.* Direct and food chain exposure pathways to birds and mammals
- *Water.* Drinking water ingestion to birds and mammals
- *Soil.* Direct exposure pathways to invertebrates (e.g., earthworms) and plants
- *Water and sediment.* Direct exposure pathways to aquatic community organisms

ESLs are used in screening-level ecological risk assessments (SLERAs) at the Laboratory. The TRVs, ESLs, model parameters, and all supporting documentation are archived in the Laboratory's Ecorisk Database (LANL 2005, 090032). The SLERA methodology is documented in "Screening-Level Ecological Risk Assessment Methods, Revision 2" (LANL 2004, 087630).

This document serves as guidance for risk assessors, risk managers, and others who wish to understand the logic behind the literature, evaluations, and documentation that leads to the development of TRVs used to calculate ESLs for SLERAs at the Laboratory.

Section 2 of this document provides a summary of ESL development and use.

Section 3 provides a summary of TRV development. It includes the working definition of a TRV at the Laboratory, an overview of the tiered TRV development process applied by the Laboratory, and a detailed description of each of the four tiers: Tier 1 (national value), Tier 2 (Laboratory-derived geometric mean TRV), Tier 3 (Laboratory-derived critical study TRV), and Tier 4 (non–Laboratory-derived critical study TRV).

Appendix A contains the primary toxicity study evaluation (PTSE) methods used to develop Laboratory TRVs. The PTSE process is used to develop the Laboratory's Tier 2 and Tier 3 TRVs from the primary toxicity literature. Appendix A contains data sources and a detailed step-by-step process for data entry for the PTSE databases created in Microsoft Access for documentation purposes.

Please note that this document best describes the PTSE process for Ecorisk Database Release 2.4 (LANL 2009, 107524). Any updates/revisions to the methods can be obtained from the current Risk Assessment Team Leader for the Laboratory's Environmental Programs (EP) Directorate.

2.0 SUMMARY OF ESL DEVELOPMENT AND USE

ESLs are used to evaluate potential hazards associated with chemicals and radionuclides found at the Laboratory. The Laboratory has developed chemical-, media-, and receptor-specific ESLs using a tiered TRV development approach, as described in section 3 of this document. ESLs are developed and maintained by the Laboratory as part of the Ecorisk Database, which archives the ESLs, TRVs, associated exposure parameters, and all supporting documentation. The Ecorisk Database was initially developed in 1998, with the most current release (2.4) provided in December 2009.

The development of an ESL is a two-step process. The first step involves identifying or developing a TRV. In the second step, the TRV and exposure parameters are used to calculate ESLs for chemicals and ecological receptors representative of the ecosystems at the Laboratory. Eleven different receptors were selected to be representative of mammals, birds, plants, and invertebrates inhabiting terrestrial and aquatic ecosystems at the Laboratory. At the time of this publication, 182 analytes, including inorganic chemicals, organic chemicals, and radionuclides, have ESLs documented in the database.

2.1 Goals of the Risk Assessment Process at the Laboratory

The goals of the risk assessment process are two-fold: (1) to quantify hazards to the environment and associated exposure to radioactive and chemical wastes from past treatment, storage, and disposal practices; and (2) to facilitate meeting the environmental cleanup requirements of the Laboratory's permit to operate hazardous waste facilities.

In accordance with these goals, the SLERA is used to determine whether there is a potential ecological risk that needs to be more fully considered in a baseline ecological risk assessment.

2.2 The Screening Level Ecological Risk Assessment Process

The purpose of the screening assessment is to provide information to risk managers so that informed risk management decisions can be made. The SLERA process follows the U.S. Environmental Protection Agency's (EPA's) "Ecological Risk Assessment Guidance for Superfund: Process for Designing and Conducting Ecological Risk Assessments" (EPA 1997, 059370) and the "Guidelines for Ecological Risk Assessment" (EPA 1998, 062809). The SLERA process uses information on the environmental setting, contaminant fate and transport, exposure pathways, and functional food webs to establish a conceptual site model that can be assessed for impacts using assessment endpoints and a select group of screening receptors. The SLERA process then uses ESLs as threshold values to aid in determining whether a chemical is of potential ecological concern and requires further investigation. The ESLs are developed for individual chemicals and are medium and receptor specific. If a site has levels of a chemical above the ESL in any medium, then this site may pose a potential risk to ecological receptors. To evaluate the potential risk for each chemical of potential concern (COPC), the ESL and the representative site concentration are used to calculate the hazard quotient (HQ). If the HQ for a COPC is greater than 1.0 at a site with only a single COPC, or the HQ for a COPC is greater than 0.3 for a site with multiple COPCs, then that chemical is identified as a chemical of potential ecological concern (COPEC) and evaluated further.

ESLs are specific to each medium (air, soil, sediment, and water) and do not account for exposure to multiple media. A method to account for wildlife exposure to multiple media includes a multimedia exposure calculation that results in a hazard index (HI) value for each wildlife receptor. The HI is a sum of HQ values. HQs are calculated for each screening receptor and each contaminant and may be thought of as a ratio of a receptor's exposure at the site to an acceptable effect level. If the HI is greater than 1.0, then the site may pose an ecological risk. An uncertainty analysis follows COPEC identification and can result in adding chemicals to, or removing them from, the list of COPECs. The SLERA process is described in detail in "Screening-Level Ecological Risk Assessment Methods, Revision 2" (LANL 2004, 087630).

2.3 Description of Ecological Screening Levels

ESLs are media- and receptor-specific values. Air, soil, sediment, and water ESLs are calculated for ecological screening receptors in various functional feeding guilds (e.g., carnivores, herbivores,

insectivores). The ESLs are calculated using ecological exposure parameters (e.g., ingestion rate and bioconcentration factors) and the TRV. The ESL calculations are described in detail in “Screening-Level Ecological Risk Assessment Methods, Revision 2” (LANL 2004, 087630), and ESL values are archived in the Ecorisk Database along with the models and model parameter values including the TRVs.

2.4 Description of the Ecorisk Database

The Ecorisk Database was created in 1998 as a user-friendly database application to document and archive information for the ESLs and associated parameters including TRVs. The Ecorisk Database also provides detailed documentation for justifying the type of information collected and used and illustrates how values are calculated. The database can be searched by chemical or screening receptor and generates on-screen and printable reports for all ESLs, TRVs, and exposure parameters. The database is a Microsoft Access file that is distributed to all project risk assessors and is provided upon request to federal and state agencies and other contractors, both nationally and internationally.

2.5 Update of ESLs and the Ecorisk Database

The selection of the specific chemicals for which ESLs are derived is primarily dependent upon project needs. ESLs are updated based on changes to the ESL equations, the calculation or source of ESL parameters, and more recent or updated TRVs. The need for ESLs is reviewed to determine priorities for TRV development. If new ESLs are not needed, then existing TRVs are reviewed to determine priorities for retrieving and reviewing new literature to supplement information in the database.

A new release of the database is provided as necessary. All new/updated ESL parameters and TRVs are recorded in the database, and the new ESLs are calculated. All ESLs, TRVs, and calculations undergo quality assurance checks. Each database release contains an ESL history report that documents any changes made to data or the database interface since the last release.

2.6 Interim and Surrogate ESLs/TRVs

Interim and surrogate ESLs/TRVs are also included along with the most recent release of the Ecorisk Database. Interim values are those that have not been formally peer reviewed by the EP Directorate’s Risk Assessment Team. Interim values are provided to risk assessors as needed between database releases.

Surrogate ESLs/TRVs are used for chemicals lacking toxicity data but are structurally similar to, or a degradation product of, chemicals with an ESL/TRV.

3.0 SUMMARY OF TRV DEVELOPMENT

3.1 TRV

A TRV represents an exposure rate associated with an acceptable risk from chronic exposure of an ecological receptor to a specific contaminant via a specific exposure pathway. In other words, exposures exceeding the TRV may pose adverse effects to wildlife species, while exposures below the TRV are not expected to result in adverse effects (EPA 2005, 089448).

TRVs are important parameters in ESL calculations because “they represent the component of the model that determines whether or not a contaminant in a media may present potential harm to ecological receptors in the area” (Podolsky et al. 2001, 072586). For any given chemical, TRV values vary among

government agencies and private sectors because the methods used to develop them vary according to the site-specific concerns of the organization that developed them (i.e., receptor species, chemical, type of exposure pathway, type and magnitude of uncertainty factors applied).

The ideal TRV for ecological risk screening assessments at the Laboratory is one that is based on literature representing the most ecologically relevant effects (reproduction/development, survival and/or adult weight/size change), exposure routes (oral ingestion via food or drinking water for birds and mammals, inhalation for mammals, uptake via seed coat and/or roots for plants, and direct contact exposure for invertebrates and aquatic community organisms), exposure media (food and drinking water for birds and mammals, air for mammals, soil for plants and invertebrates, and water and sediment for aquatic community organisms), exposure period (chronic), and effect levels (no observed adverse effect level [NOAEL] for vertebrates or no observed effect concentration [NOEC] for plants and invertebrates). A TRV based on these characteristics is considered protective of the wildlife; aquatic community organism, plant, and invertebrate populations; and sensitive individuals because it represents an exposure that is not associated with adverse impacts of low-level, long-term chemical effects (i.e., adverse effects on ability of individuals to develop into viable organisms, search for mates, breed successfully, and produce live and equally viable offspring).

3.2 Definitions

3.2.1 Ecologically Relevant Effects

An ecologically relevant toxicity study effect is defined as a measurement that is considered most closely related to population effects, i.e., an effect that directly influences reproductive success and survival. Reproduction, development, survival, and weight/size change measurements are considered to be more ecologically relevant than biochemical, physiological, or cancer measurements because they more closely reflect effects on population health/size (EPA 2005, 089448); thus, the former are selected for use in developing TRVs at the Laboratory.

3.2.2 Ecologically Relevant Media and Exposure Routes

An ecologically relevant toxicity study exposure medium/route is defined as one that is most closely related to that which is found in the natural environment of concern.

Wildlife receptors are exposed to chemicals in their natural environment primarily through their diet, so ingestion of food or food-like substances is considered the most ecologically relevant toxicity study exposure medium/route for developing TRVs at the Laboratory for wildlife. Oral exposure using capsules, gavage, or intubation is considered similar to ingestion of food and thus also ecologically relevant. Wildlife receptors are also exposed, although to a lesser degree, to chemicals through ingestion of drinking water and, under special circumstances, through the inhalation of air (e.g., burrowing mammal), so separate TRVs are developed with toxicity data for chemicals being ingested in drinking water, and separate TRVs are developed for chemicals inhaled in air. Because of differences in bioavailability of chemicals depending on the exposure media/routes, those that do not represent chemical exposure through the digestive system or through the lungs are not considered ecologically relevant, e.g., intraperitoneal, intravenous, or intramuscular. Wildlife receptors are also exposed dermally to chemicals, but this exposure route is not considered for TRV development because the contribution of dermal exposure to the overall exposure is considered minimal compared to the other exposure scenarios mentioned above (i.e., fur and feathers as barrier, dermal exposure less significant than oral exposure [EPA 2005, 089448]).

Terrestrial plants and worms are exposed to chemicals in their natural environment primarily through direct uptake from soil, which is the most ecologically relevant toxicity study exposure medium/route for developing TRVs for plants and worms at the Laboratory. Because of differences in the bioavailability of chemicals in different exposure media, exposure in solution or on filter paper is not considered ecologically relevant. Also, worms ingest chemicals in soil in their natural environment, but this exposure medium/route is not considered separately. The contribution to the overall exposure from ingestion is difficult to discern because the worm's alimentary tract is in contact with soil the majority of the time as well.

Aquatic community organisms are exposed to chemicals in their natural environment primarily through direct contact with water and sediment, which are the most ecologically relevant toxicity study exposure media/routes for developing TRVs at the Laboratory for aquatic community organisms. Also, some aquatic community organisms may ingest chemicals in water and/or sediment in their natural environment, but this exposure medium/route is not considered because the contribution to the overall exposure is considered minimal compared to the direct contact uptake since the organism's body is in complete contact with the water and/or sediment at all times.

3.2.3 Ecologically Relevant Test Organisms (species)

An ecologically relevant toxicity study test organism (species) is defined as one that represents the ecological receptor of concern at least at the taxonomic class level, e.g., mammal, bird, plant, or earthworm class. Although there are species differences within a class, the toxicity data are generally not robust enough to evaluate such differences, except qualitatively.

3.2.4 Exposure Duration Categories

To be ecologically relevant, the toxicity study exposure duration is defined as one with a chemical exposure encompassing the majority of the test organism's lifespan or the critical period / life stage of reproduction. The definition of chronic varies depending on the interpretation of lifespan data, and the definition of chronic critical life stage varies depending on the interpretation of life stage data. The Laboratory uses the definitions stated in EPA's "Screening Level Ecological Risk Assessment Protocol for Hazardous Waste Combustion Facilities" (EPA 1999, 070923).

Because not all toxicity studies are chronic or focused on a critical life stage, less than chronic data are used after the application of appropriate uncertainty factors to extrapolate data to a chronic value. Uncertainty factors for subchronic, acute, and single-dose exposures are described in more detail in section 3.2.7, Uncertainty Factors. Less than chronic data are deemed appropriate for use to increase the size of otherwise limited data sets.

3.2.5 Selection of Dose Calculation

To be ecologically relevant, a dose calculation parameter for wildlife exposure models such as body weight, ingestion, or inhalation rate is defined as one that best matches the age / life stage of the test organism, as well as best reflects the entire chemical administration period of the toxicity study. Furthermore, food ingestion rates in units of dry weight are preferred in order to normalize the rate for moisture content of different dietary items.

3.2.6 Dose Calculation

An ecologically relevant dose calculation for wildlife exposure models is defined as one that is continuous/daily because this best represents a chronic exposure, which is generally the exposure of concern in SLERAs. If a datum from an intermittent dosing design is used to develop a toxicity value, it is normalized to a continuous rate before calculating a toxicity value (e.g., normalizing an intermittent inhalation study design to a continuous/daily dose).

3.2.7 Uncertainty Factors

In order to best represent an ecologically relevant TRV, uncertainty factors are used to extrapolate toxicity values from studies with less than chronic exposure durations, as well as from toxicity values representing effect levels other than a NOAEL/NOEC, such as a lowest observed adverse effect level / lowest observed effect concentration (LOAEL/LOEC), lethal median dose (LD_{50}), or lethal median concentration (LC_{50}). Uncertainty factor application allows the use of more data to increase an otherwise limited data set available for developing a TRV. Uncertainty factors are generally based on the relationship identified between no effect and low or lethal effect levels as well as best risk management practices. The Laboratory uses uncertainty factors as defined in EPA's "Screening Level Ecological Risk Assessment Protocol for Hazardous Waste Combustion Facilities" (EPA 1999, 070923).

4.0 TIERED TRV APPROACH

TRVs are identified/developed in one of four ways. Depending on how it is developed, the TRV is assigned a tier of 1 to 4. A Tier 1 TRV has the most certainty in the toxicity data used to derive it, and a Tier 4 TRV has the least certainty in its derivation. This tiered process reduces data gaps by allowing for the maximal use of available toxicity data by considering a variety of sources, while at the same time communicating the degree of certainty in the data supporting the value.

Tiers are presented in the order of preference and confidence used to derive the TRVs and are as follows:

- *Tier 1.* A published, nationally accepted TRV such as an EPA ecological soil screening level TRV or International Atomic Energy Agency radionuclide dose limit of 0.1 rad per day for the protection of ecological receptors at the population level.
- *Tier 2.* A TRV equal to the geometric mean of ecologically relevant NOAEL- or NOEC-based effect levels derived from review of the primary toxicity literature by the Laboratory (three or more data points are available) using the PTSE process (see Appendix A).
- *Tier 3.* A critical study (CS) TRV, which is based on an ecologically relevant maximum NOAEL- or NOEC-based effect level that is lower than the lowest reported LOAEL- or LOEC-based effect level derived from review of the primary toxicity literature by the Laboratory using the PTSE process (see Appendix A).
- *Tier 4.* A CS TRV derived using ecologically relevant primary toxicity values (PTVs) or TRVs reported by a secondary data source such as Oak Ridge National Laboratory, Sandia National Laboratories, U.S. Army Center for Health Promotion and Preventive Medicine, or EPA Region 5 environmental data quality levels.

Tier 1 TRVs are considered to have the greatest certainty considering the rigorous national peer review they have undergone before publication. The certainty associated with the Tier 2 and Tier 3 TRVs is

based on the ecological relevance of available toxicity information based on the internal peer review by the Laboratory. Tier 2 TRVs have more certainty than Tier 3 TRVs because they are based on more toxicity information from the literature. Tier 4 TRVs are considered to have the most uncertainty because these secondary compilations of the literature do not provide as much documentation as is available for Tiers 1, 2, or 3.

5.0 CONVERSION OF TRVs TO ESLs

ESLs are chemical- and medium-specific screening levels pertaining to a given receptor (e.g., avian omnivore, earthworm) and medium (sediment, soil, water, and/or air). The TRV is used in the receptor-specific ESL calculation, which converts the toxicity value from a dose (mg-contaminant/kg body weight/d) to an environmental concentration (e.g., mg-contaminant/kg-soil) using factors to estimate the transfer of chemical from soil, sediment, or water to dietary media (e.g., soil-to-plant transfer factor) and receptor-specific exposure parameters (e.g., ingestion/inhalation rates and body weight). In the case of plants, earthworms, and aquatic organisms, the TRV is equal to the ESL because the toxicity value is already in environmental concentration units.

6.0 OVERVIEW OF APPENDIX A

The Laboratory's PTSE process is used to develop Tier 2 and Tier 3 TRVs. Because this process is detailed and the supporting documentation is contained in a standardized format within the Ecorisk Database, a document that explains the field names, standardized or explanatory data entries, and justification thereof is needed for risk assessors and managers to understand the foundation of the values being used in SLERAs.

Appendix A also provides detailed instructions for performing PTSEs of the literature on the toxicity of chemicals to terrestrial birds, mammals, invertebrates (earthworms), and plants. The data obtained through the PTSE process are used to calculate PTVs. A PTV or group of PTVs is used to derive a Tier 3 CS TRV or Tier 2 geometric mean TRV, respectively, depending on the size of the data set available.

In the case of birds or mammals, a PTV is a daily dose rate (mg chemical/kg body weight/d) derived from the experiment and based on up to three dose rate parameters: (1) the concentration of the chemical administered in the study, (2) the food or water ingestion rate or inhalation rate of the test organism, and (3) the body weight of the test organism. In the case of plants or invertebrates, a PTV is a soil concentration (mg chemical/kg soil) based on the concentration of the chemical administered in the study. A PTV can be designated as a certain effect level (e.g., NOAEL or LC_{50}), depending on whether and to what extent the daily dose rate potentially leads to adverse effects in the test organisms.

"Data" represents toxicity information from the scientific literature such as details of the study design, test organism, or toxicological effects.

The PTSE process consists of the following four main steps: (1) data extraction, (2) study evaluation and PTV calculation, (3) TRV development, and (4) TRV peer review and approval. Each of the first three steps has their own data-entry database to facilitate the evaluation and to document the process. The fourth step consists of having the EP Directorate's Risk Assessment Team peer review each TRV derived through the PTSE process. Once a TRV is approved, the new PTSE TRV and all supporting data are incorporated into the Ecorisk Database for calculating appropriate ESLs for specific chemicals, exposure pathways, and screening receptors. These ESLs are ultimately used in SLERAs. Although the TRVs are just one component of the Ecorisk

Database, they play a crucial role in the derivation of ESLs. Much consideration of the toxicological data takes place during TRV development to best estimate the exposure concentration in environmental media that will not harm key screening receptors and possibly other organisms in the Laboratory's environment.

In summary, Appendix A includes guidelines for the literature search and collection, data extraction, default value assignment, and exception ruling for various fields of data entry in customized PTSE databases, PTV calculation, and TRV derivation. Before performing a PTSE, the primary toxicity literature for the organism and for the exposure pathway and chemical scenario of concern must be identified and collected. As a result, the appendix begins with guidelines for literature searches and retrieval.

7.0 REFERENCES

The following list includes all documents cited in this report. Parenthetical information following each reference provides the author(s), publication date, and ER ID. This information is also included in text citations. ER IDs are assigned by the Environmental Programs Directorate's Records Processing Facility (RPF) and are used to locate the document at the RPF and, where applicable, in the master reference set.

EPA (U.S. Environmental Protection Agency), June 5, 1997. "Ecological Risk Assessment Guidance for Superfund: Process for Designing and Conducting Ecological Risk Assessments, Interim Final," Office of Emergency and Remedial Response, Washington, D.C. (EPA 1997, 059370)

EPA (U.S. Environmental Protection Agency), April 1998. "Guidelines for Ecological Risk Assessment," EPA/630/R-95/002F, Risk Assessment Forum, Washington, D.C. (EPA 1998, 062809)

EPA (U.S. Environmental Protection Agency), August 1999. "Screening Level Ecological Risk Assessment Protocol for Hazardous Waste Combustion Facilities," Volume One, peer review draft, EPA530-D-99-001A, Office of Solid Waste and Emergency Response, Washington, D.C. (EPA 1999, 070923)

EPA (U.S. Environmental Protection Agency), February 2005. "Guidance for Developing Ecological Soil Screening Levels," OSWER Directive No. 9285.7-55, Office of Solid Waste and Emergency Response, Washington, D.C. (EPA 2005, 089448)

LANL (Los Alamos National Laboratory), December 2004. "Screening-Level Ecological Risk Assessment Methods, Revision 2," Los Alamos National Laboratory document LA-UR-04-8246, Los Alamos, New Mexico. (LANL 2004, 087630)

LANL (Los Alamos National Laboratory), September 2005. "Ecorisk Database (Release 2.2)," on CD, LA-UR-05-7424, Los Alamos National Laboratory, Los Alamos, New Mexico. (LANL 2005, 090032)

LANL (Los Alamos National Laboratory), December 2009. "Ecorisk Database (Release 2.4)," on CD, LA-UR-09-7834, Los Alamos National Laboratory, Los Alamos, New Mexico. (LANL 2009, 107524)

Podolsky, J.S., P.G. Newell, and O.B. Myers, 2001. "A Comparison of Toxicity Reference Values and Their Derivation Methods: Implications for Ecological Risk Assessment," presentation, Los Alamos National Laboratory document LA-UR-01-6503, Los Alamos, New Mexico. (LANL 2001, 072586)

Appendix A

Primary Toxicity Study Evaluation Methods Used to Develop Los Alamos National Laboratory Toxicity Reference Values

CONTENTS

A-1.0 PRIMARY TOXICITY STUDY EVALUATION METHODS A-1
A-1.1 Primary Toxicity Literature Search and Retrieval A-1
A-1.2 Overview of PTSEs A-7
A-1.2.1 Part 1, Data Extraction A-7
A-1.2.2 Part 2, Study Evaluation and PTV Calculation A-7
A-1.2.3 Part 3, TRV Development A-7
A-1.2.4 Part 4, TRV Approval A-8

A-2.0 PTSE PART 1, DATA EXTRACTION A-8
A-2.1 Data Entry A-8
A-2.1.1 Reference and Reviewer Information A-8
A-2.1.2 Chemical Information A-10
A-2.1.3 Experiment Information A-10
A-2.1.4 Measurements and Results A-25

A-3.0 PTSE PART 2, STUDY EVALUATION AND PRIMARY TOXICITY VALUE CALCULATION .. A-32
A-3.1 Data Evaluation and Scoring Guidelines A-33
A-3.1.1 General PTSE Information A-33
A-3.1.2 Study Design and Documentation Score A-33
A-3.1.3 Test Organism Score A-36
A-3.1.4 Exposure Conditions Score A-37
A-3.1.5 Measurement(s) and Result(s) A-40
A-3.1.6 PTV Calculation A-41
A-3.2 PTV Calculation Guidelines A-42
A-3.2.1 Background Concentration Explanation A-43
A-3.2.2 Moisture Basis Explanation A-43
A-3.2.3 Obtaining Dose Rate Parameters for Use in PTV Calculations A-44
A-3.2.4 PTV Calculation for Oral Ingestion via Food (Birds and Mammals) A-45
A-3.2.5 PTV Calculation for Oral Ingestion via Drinking Water (Birds and Mammals) ... A-46
A-3.2.6 PTV Calculation for Continuous and Intermittent Air Exposure via Inhalation (Mammals) A-46
A-3.2.7 Significant Digits and Rounding Procedure A-51
A-3.2.8 PTV Confidence Rating Guidelines A-52

A-4.0 PTSE PART 3, TOXICITY REFERENCE VALUE DEVELOPMENT A-55
A-4.1 Creation of the GMM TRV Data Set A-56
A-4.1.1 Exclusion Criteria for Study Exposure Conditions A-56
A-4.1.2 Exclusion Criteria for Endpoints Measured in a Study A-57
A-4.1.3 Exclusion Criteria for Repetitive Values A-58
A-4.1.4 Deriving Chronic NOAEL- or NOEC-Based Effect Levels A-58
A-4.1.5 Deriving Chronic LOAEL- or LOEC-Based Effect Levels A-59
A-4.1.6 Calculation of the GMM TRV A-67
A-4.2 CS TRVs A-67
A-4.3 Organization and Presentation of TRV Data Set Information A-67
A-4.3.1 Organization of TRV Data in Tabular Format A-67
A-4.3.2 Presentation of TRV Data in Graphs A-68
A-4.3.3 Assigning Confidence Ratings to TRVs A-69

A-4.3.4 Drafting the TRV Summary Report and PTSE Part 3 Data Entry A-77

A-5.0 PTSE PART 4, TRV APPROVAL A-86

A-6.0 REFERENCES A-86

Figures

Figure A-1 Process for selecting the chronic LOAEL- or LOEC-based effect level for each endpoint in the GMM TRV data set A-60

Figure A-2 Example of a graph illustrating the GMM TRV for the inhalation of acetone in mammals and its corresponding NOAEL-based effect levels A-69

Tables

Table A-1 Online Databases and Search Engines to Search for Primary Toxicity Data Literature A-2

Table A-2 Examples of Secondary Toxicity Data Literature Bibliographies to Review for Primary Toxicity Data Literature Citations A-6

Table A-3 Age Categories, Codes, and Definitions A-13

Table A-4 Scenarios of Dose Rate Parameter Information Reported in Primary Toxicity Studies and How Body Weight Values are Reported in the PTSE Part 1 Data-Entry Database Field for Body Weight A-16

Table A-5 Codes and Descriptions for Exposure Media A-18

Table A-6 Codes and Descriptions for Exposure Routes A-19

Table A-7 Exposure Duration Categories and IDs for Birds, Mammals, Earthworms, and Plants A-20

Table A-8 Category Codes and Descriptions for Focus Measurements A-26

Table A-9 Exposure Durations A-39

Table A-10 Weighting Schemes for Criteria in Part 2 of the Data-Entry Database A-53

Table A-11 Percent Maximum Scores and Confidence Ratings A-55

Table A-12 Exclusion Criteria for Exposure Conditions Used in a Study A-57

Table A-13 Uncertainty Factors Applied to Derive Chronic NOAEL- or NOEC-Based Effect Levels A-58

Table A-14 Weighting Factor Levels A-70

Table A-15 Scores, Weighting Factors, and Weighted Scores for each Evaluation Category and Criterion A-70

Table A-16 Confidence Ratings for GMM TRVs A-73

Table A-17 Justifications for Scoring Criteria and Weighting Factor Levels for Each Evaluation Category A-73

Examples

Example A-1 Reference Summaries A-9
Example A-2 Experiment IDs A-10
Example A-3 Experiment Purposes A-11
Example A-4 Author's Reason for Studying this Particular Test Organism A-12
Example A-5 The Selection of Dose Rate Parameters to Provide the Most Protective PTV A-17
Example A-6 Soil Characteristics A-22
Example A-7 Growth Medium Types A-23
Example A-8 Measurements Not Evaluated and Why A-24
Example A-9 Experiment Effect IDs A-25
Example A-10 Exceptions to Coding for Critical Life Stages A-29
Example A-11 Focus Measurement Comments/Effect Levels A-30
Example A-12 Background Concentration Calculations A-43
Example A-13 Moisture Basis Calculations A-44
Example A-14 Unit Conversions A-45
Example A-15 PTV Calculation for a One-Phase Intermittent Inhalation Exposure A-49
Example A-16 PTV Calculation for a Two-Phase Intermittent Inhalation Exposure in which the Exposure Frequency is Different from One Phase to the Next A-50
Example A-17 PTV Calculation for a Two-Phase Intermittent Inhalation Exposure in which the Exposure Concentration is Different from One Phase to the Next A-51
Example A-18 Part 3 TRV Summary IDs A-77
Example A-19 GMM TRV Record IDs A-78
Example A-20 Graph Group IDs A-78

Attachments

Attachment A-1 GMM TRV Summary Report Example
Attachment A-2 CS TRV Summary Report Example

Acronyms and Abbreviations

ATSDR	Agency for Toxic Substances and Disease Registry
C-CL	chronic-critical life stage
Cal/Ecotox	California OHHEA Wildlife Biology, Exposure Factor, and Toxicity Database
CASRN	Chemical Abstracts Service Registry Number
CEC	cation exchange capacity
CL	critical life stage
CS	critical study

DART/ETIC	Development and Reproductive Toxicology/Environmental Teratology Information Center
EC_{xx}	effective concentration for xx% of the population
Eco-SSL	ecological soil screening level
ECOTOX	Ecotoxicology (database)
ED_{xx}	effective dose for xx% of the population
EP	Environmental Programs (Directorate)
EPA	U.S. Environmental Protection Agency
ERED	Environmental Residue-Effects Database
ESL	ecological screening level
ETWS	equivalent total weighted score
EXTOXNET	Extension Toxicology Network
Fm	female
GMM	geometric mean
GSD	geometric standard deviation
HMX	1,3,5,7-tetranitro-1,3,5,7-tetrazocine
IRIS	Integrated Risk Information System
ITER	International Toxicity Estimates for Risk
LANL	Los Alamos National Laboratory
LC_{xx}	lethal concentration for xx% of the population
LD_{xx}	lethal dose for xx% of the population
LOAEL	lowest observed adverse effect level
LOEC	lowest observed effect concentration
LOEL	lowest observed effect level
%MTWS	percent of maximum total weighted score
MF	male and female
Ml	male
N/A	not applicable
NLM	National Library of Medicine
NOAEL	no observed adverse effect level
NOEC	no observed effect concentration
NOEL	no observed effect level
NR	not reported
O	other

OC	organic carbon
OECD	Organisation for Economic Co-operation and Development
OHHEA	Office of Environmental Health Hazard Assessment (state of California)
OM	organic matter
ORNL	Oak Ridge National Laboratory
PAN	Pesticide Action Network
PTSE	primary toxicity study evaluation
PTV	primary toxicity value
R/D	reproduction/development
RDX	hexahydro-1,3,5-trinitro-1,3,5-triazine
Ref ID	reference identification
RfC	reference concentration
RfD	reference dose
S	survival
SNL	Sandia National Laboratories
SzC	size change (adult)
T&E	threatened and endangered
TOXLINE	Toxicology Literature Online
TOXNET	Toxicology Data Network
TRV	toxicity reference value
UF	uncertainty factor
USACHPPM	U.S. Army Center for Health Promotion and Preventive Medicine
USGS	U.S. Geological Society
WC	weight change (adult)

A-1.0 PRIMARY TOXICITY STUDY EVALUATION METHODS

A-1.1 Primary Toxicity Literature Search and Retrieval

Before a primary toxicity study evaluation (PTSE) can be started, the primary toxicity literature for the organism, exposure pathway, and chemical scenario of concern (e.g., plant root uptake of barium from soil) must be collected.

A literature search consists of the following two components: (1) an online search of databases that contain citations for primary toxicity literature (see Table A-1), and (2) a review of bibliographies of secondary toxicity data literature that has been identified either through online searches or the risk assessment community (see Table A-2). Each piece of literature (reference) identified is assigned a unique Ecorisk Database reference identification (Ref ID) number for identification, tracking, and citation during the literature search, review, and evaluation process. These numbers will be included throughout this document.[1]

Keyword searches are performed. For example, if the title of a reference in a bibliography (or an online literature search result) indicates that the reference contains the sought-after toxicity information, a paper copy of the reference is retrieved. The abstracts are then reviewed to verify that the reference contains applicable toxicity data for the derivation of a toxicity reference value (TRV). Verification of applicable contents requires scanning the reference for relevant measurement endpoints (including reproduction, development, survival, adult weight changes, and adult size changes) that are considered to have a direct link to the fitness of an organism and its contribution toward population health. Focusing on ecologically relevant endpoints ensures that all levels of ecological organization are considered in the screening process (LANL 2004, 087630, Ref ID 1554). If the reference contains ecologically relevant data, then a PTSE can be performed. In cases where ecologically relevant endpoints are not available for certain chemicals and organism groups, a PTSE may be performed on references with endpoints having a less direct link to the fitness of an organism and its contribution toward population health, such as endpoints associated with physiological functions, cancer, histopathology, clinical observations, and behavioral changes. Values based on endpoints other than reproduction/development, survival, or weight or size change are to be used with caution given the uncertainty surrounding their impact on population health (LANL 2004, 087630, Ref ID 1554).

[1] Initially, the construction of the Ecorisk Database took precedence over performing extensive toxicity data literature retrieval. The initial literature search for bird, mammal, invertebrate (earthworm), and plant toxicity data was limited to reviewing reference lists in secondary references and conducting minimal searches of online literature databases. As the Ecorisk Database underwent further development, literature searches became more comprehensive and included more extensive online literature searches and reviews of related bibliographies.

Table A-1
Online Databases and Search Engines to Search for Primary Toxicity Data Literature

Internet Source	Site Contents / Database Name	Web Address
Australian Government, Department of the Environment and Heritage	National Pollutant Inventory database	http://www.npi.gov.au/index.html
First Search	Literature search engine	http://www.oclc.org/firstsearch/
Google	Internet search engine	http://www.google.com
Los Alamos National Laboratory (LANL)	External and internal access to library catalogs	http://lib-www.lanl.gov/
National Library of Medicine (NLM)	MEDLINE/PubMed literature search engine	http://www.ncbi.nlm.nih.gov/PubMed/
	Toxicology Data Network (TOXNET) literature search engine (includes Toxicology Literature Online [TOXLINE], Integrated Risk Information System [IRIS], and several other databases)	http://toxnet.nlm.nih.gov/
TOXNET	TOXNET is a cluster of databases covering toxicology, hazardous chemicals, environmental health, and related areas. It is managed by the Toxicology and Environmental Health Information Program in the Division of Specialized Information Services of the NLM. International Toxicity Estimates for Risk (ITER) is a database that contains risk information for over 600 chemicals from authoritative groups worldwide.	http://toxnet.nlm.nih.gov/cgi-bin/sis/htmlgen?iter
	Development and Reproductive Toxicology/Environmental Teratology Information Center (DART/ETIC) is a bibliographic database covering literature on reproductive and developmental toxicology. DART is managed by NLM and funded by the U.S. Environmental Protection Agency (EPA), the National Institute of Environmental Health Sciences and NLM. DART/ETIC contains references to reproductive and developmental toxicology literature published since 1965.	http://toxnet.nlm.nih.gov/cgi-bin/sis/htmlgen?DARTETIC
	TOXLINE is a bibliographic database providing comprehensive coverage of the biochemical, pharmacological, physiological, and toxicological effects of drugs and other chemicals from 1965 to the present. TOXLINE contains over 3 million citations, almost all with abstracts and/or index terms and Chemical Abstracts Service Registry Numbers (CASRNs).	http://toxnet.nlm.nih.gov/cgi-bin/sis/htmlgen?TOXLINE

Table A-1 (continued)

Internet Source	Site Contents / Database Name	Web Address
Integrated Risk Information System	IRIS is an electronic database containing information on human health effects that may result from exposure to various substances in the environment. IRIS is prepared and maintained by the EPA's National Center for Environmental Assessment within the Office of Research and Development. *Noncancer effects:* Oral reference doses (RfDs) and inhalation reference concentrations (RfCs) for effects known or assumed to be produced through a nonlinear (possibly threshold) mode of action. In most instances, RfDs and RfCs are developed for the noncarcinogenic effects of substances. *Cancer effects:* Descriptors that characterize the weight of evidence for human carcinogenicity, oral slope factors, and oral and inhalation unit risks for carcinogenic effects. Where a nonlinear mode of action is established, RfD and RfC values may be used. Primary toxicity study references for mammalian test species are reported and include body weight and survival data.	http://www.epa.gov/ncea/iris/search_keyword.htm
National Technical Information Service	Source of government-funded information	http://www.ntis.gov/search/index.aspx
Pacific Northwest National Laboratory	External access to Pacific Northwest National Laboratory publication catalog	http://www.pnl.gov/main/publications/index.asp
Web of Science	Literature search engine (accessed via Colorado State University)	http://libguides.colostate.edu/content.php?pid=30095&sid=220274
U.S. Geological Society (USGS)	USGS Contaminant Exposure and Effects–Terrestrial Vertebrates database contains contaminant exposure and effects information for terrestrial vertebrates (birds, mammals, amphibians, and reptiles) that reside in estuarine and coastal habitats along the Atlantic, Gulf, and Pacific Coasts, including Alaska and Hawaii, and in the Great Lakes Region.	http://www.pwrc.usgs.gov/contaminants-online/pages/CEETV/CEETVintro.htm
U.S. Environmental Protection Agency (EPA) Office of Pesticide Programs	EPA Office of Pesticide Programs' Aquatic Life Benchmarks.	http://www.epa.gov/oppefed1/ecorisk_ders/aquatic_life_benchmark.htm

Table A-1 (continued)

Internet Source	Site Contents / Database Name	Web Address
Pesticide Action Network (PAN)	The PAN Pesticide Database is a one-stop location for toxicity and regulatory information for pesticides. The PAN Pesticide Database brings together a diverse array of information on pesticides from many different sources, providing human toxicity (chronic and acute), ecotoxicity, and regulatory information for about 6400 pesticide active ingredients and their transformation products, as well as adjuvants and solvents used in pesticide products. Only aquatic ecotoxicity data are reported.	http://www.pesticideinfo.org/Search_Ecotoxicity.jsp
EPA Ecotoxicology (ECOTOX) Database	The ECOTOX database provides single chemical toxicity information for aquatic and terrestrial life. Values reported include the lethal concentration for 50% of the population (LC_{50}), no observed effect concentration (NOEC), lowest observed effect concentration (LOEC), lowest observed effect level (LOEL), no observed effect level (NOEL), effective concentration for 50% of the population (ED_{50}), etc. Toxicity data for available substances are reported in worksheet "ECOTOX." Only terrestrial data for growth, mortality, reproduction, and population queried from database. Searched by CASRN.	http://cfpub.epa.gov/ecotox/
The American Bird Conservancy	The American Bird Conservancy Pesticide Toxicity Database contains acute pesticide toxicity data for birds.	http://www.abcbirds.org/abcprograms/policy/pesticides/aims/aims/toxicity.cfm
The California Office of Environmental Health Hazard Assessment (OHHEA) Wildlife Biology, Exposure Factor, and Toxicity Database (Cal/Ecotox)	Cal/Ecotox is a compilation of physiological and ecological parameters and toxicity data for a number of California fish and wildlife. Species, chemical, endpoint type, endpoint description, endpoint value, endpoint range, study description, and reference are reported. Data for chemicals of interest are reported in worksheet “CalEcotox.”	http://www.oehha.org/cal_ecotox/default.htm
The U.S. Army Corps of Engineers/EPA Environmental Residue-Effects Database (ERED)	The ERED is a compilation of data, taken from the literature, where biological effects (e.g., reduced survival, growth, etc.) and tissue contaminant concentrations were simultaneously measured in the same organism. Currently, the database is limited to those instances where biological effects observed in an organism are linked to a specific contaminant within its tissues.	http://el.erdc.usace.army.mil/ered/Index.cfm

Table A-1 (continued)

Internet Source	Site Contents / Database Name	Web Address
EPA National Information System of the Regional Integrated Pest Management Centers Office of Pesticide Programs Pesticide Ecotoxicity Database	The Ecological Fate and Effects Division of the EPA Office of Pesticide Programs is continuing efforts to update the database with all EPA-reviewed ecotoxicity endpoints for pesticides registered or previously registered in the U.S. Toxicity data on over 800 active ingredients, metabolites, and multi-ingredient formulations are presently included in the database. The toxicity data input into the database are compiled from actual studies reviewed by EPA in conjunction with pesticide registration or reregistration and studies performed by EPA, U.S. Department of Agriculture, and U.S. Fish and Wildlife Service laboratories, which have been reviewed by Agency biologists and judged acceptable for use in the ecological risk assessment process. The database presently contains over 21,000 records for acute and chronic toxicity endpoints on terrestrial and aquatic plants, aquatic invertebrates, terrestrial invertebrates, insects, amphibians, fish, birds, reptiles, and wild mammals. The database is presented in Microsoft Access and contains 35 fields per record entry. Each record entry summarizes one ecotoxicity study for a single species or one toxicity endpoint from a multiple-species study and includes EPA tracking information regarding that study submission.	http://www.ipmcenters.org/Ecotox/DataAccess.cfm
U.S. Army Center for Health Promotion and Preventive Medicine (USACHPPM)	The USACHPPM Wildlife Toxicity Assessment Program contains complete chemical toxicological assessments/profiles for wildlife with reference lists.	http://chppm-www.apgea.army.mil/erawg/tox/index.htm
Agency for Toxic Substances and Disease Registry (ATSDR)	The ATSDR website contains toxicological profiles for human health. These profiles succinctly characterize the toxicologic and adverse health effects information for a hazardous substance. Each peer-reviewed profile identifies and reviews the key literature that describes a hazardous substance's toxicologic properties. Other pertinent literature is also presented, but is described in less detail than the key studies. The references are generally for mammalian studies for all routes.	http://www.atsdr.cdc.gov/

Table A-2
Examples of Secondary Toxicity Data Literature
Bibliographies to Review for Primary Toxicity Data Literature Citations

Source	Author (Year, ER ID)	Description	Ecorisk Database Reference ID
Oak Ridge National Laboratory (ORNL)*	Efroymson et al. (1997, 059231)	Screening toxicity benchmarks for terrestrial plants	Ref ID 0094
	Efroymson et al. (1997, 059231)	Screening toxicity benchmarks for soil and litter invertebrates	Ref ID 0096
	Sample et al. (1996, 059306)	Screening toxicity benchmarks for wildlife	Ref ID 0344
	Maxwell and Opresko (1996, 059275)	Ecological criteria for HMX (1,3,5,7-tetranitro-1,3,5,7-tetrazocine)	Ref ID 0467
	Talmage and Opresko (1995, 059328)	Ecological criteria for 2,4,6-trinitrotoluene	Ref ID 0469
	Talmage and Opresko (1996, 059329)	Ecological criteria for RDX (hexahydro-1,3,5-trinitro-1,3,5-triazine)	Ref ID 0470
	Talmage et al. (1999, 063021)	Screening values for nitroaromatic munition compounds	Ref ID 0480
Sandia National Laboratories (SNL)	IT Corporation (1997, 057136) (Appendix A, Table A.1)	Ecological risk assessment methodology	Ref ID 0092
LANL threatened and endangered (T&E) species	Gallegos et al. (1997, 059790)	Risk assessment of peregrine falcon (includes toxicity benchmarks for avian species)	Ref ID 0427
U.S. Army	Layton et al. (1987, 014703)	Explosives information	Ref ID 0552
USACHPPM	Johnson and McAtee (2001, 110044)	Wildlife toxicity assessment for 2,4,6-trinitrotoluene	Ref ID 1195
	Johnson and Midgley (2001, 089453)	Wildlife toxicity assessment for nitroglycerine	Ref ID 1446
	Salice and Holdsworth (2001, 089452)	Wildlife toxicity assessment for 1,3,5-trinitrobenzene	Ref ID 1447
	Salice and Holdsworth (2001, 089451)	Wildlife toxicity assessment for dinitrobenzene	Ref ID 1448
	Johnson and Holdsworth (2001, 089454)	Wildlife toxicity assessment for 2-amino-4,6-dinitrotoluene and 4-amino-2,6-dinitrotoluene	Ref ID 1449
	Johnson and Holdsworth (2001, 073781)	Wildlife toxicity assessment for HMX	Ref ID 1450
	Johnson and Holdsworth (2001, 089455)	Wildlife toxicity assessment for pentaerythritol tetranitrate	Ref ID 1451
	Salice and Holdsworth (2002, 073780)	Wildlife toxicity assessment for RDX	Ref ID 1452
EPA Region 5 environmental data quality levels	PRC Environmental Management, Inc. (1996, 059989)	Ecological data quality levels	Ref ID 0574

*Reports are available online at http://www.esd.ornl.gov/programs/ecorisk/documents/tm85r3.pdf.

A-1.2 Overview of PTSEs

Once a set of references is compiled for an organism, exposure pathway, and chemical scenario of concern, each reference is subjected to the PTSE process. This process is broken down into four main parts:

1. data extraction,
2. study evaluation and primary toxicity value (PTV) calculation,
3. TRV development, and
4. TRV approval.

Data-entry databases were created for each of the first three parts of the PTSE process to guide the reviewer in extracting, scoring, and evaluating the necessary information. The database system also assists in maintaining consistency in the way the toxicity information are tabulated and peer reviewed as well as provides a mechanism for documentation of the PTSE process. Users of the Ecorisk Database can review the data reported and gain an understanding of the information supporting the TRV used to calculate a particular ecological screening level (ESL). A brief description of each part of the PTSE process is presented below, followed by a more detailed breakdown of the components of each part.

A-1.2.1 Part 1, Data Extraction

Data extraction involves reading each primary toxicity reference thoroughly, extracting pertinent pieces of information, and documenting them in the Part 1 PTSE data-entry database.

"Data" represents toxicity information from the scientific literature such as details of the study design, test organism, or toxicological effects.

A-1.2.2 Part 2, Study Evaluation and PTV Calculation

During the study evaluation process, information obtained from the data extraction process is reviewed and scored based on availability and character of information reported. The data are semiquantitatively scored in the Part 2 data-entry database in four areas: study design and documentation, taxonomic relationship of test organism to ESL screening receptors, exposure conditions, and measurements and results. Components of each of these areas are scored based on their relevancy toward deriving scientifically defensible TRVs. The score for each criterion is then weighted according to its ability to influence the development of a TRV with the least uncertainty. Uncertainty is the extent to which the TRV represents a dose rate or concentration in an exposure medium that is associated with no significant risk for adverse ecological effects for the LANL environmental exposure scenario of concern; therefore, uncertainty can be influenced by how well the data approximates the LANL exposure scenario. The last step in this part is to calculate the PTVs: no observed adverse effect levels (NOAELs) for birds and mammals or NOECs for earthworms and plants, lowest observed adverse effect levels (LOAELs) for birds and mammals or LOECs for earthworms and plants, and/or other effect levels (e.g., effective concentrations for xx% of the population [EC_{xx}s] or lethal doses for xx% of the population [LD_{xx}s]).

A-1.2.3 Part 3, TRV Development

In Part 3, the number of PTVs available for TRV development for an organism, exposure pathway, and chemical scenario of concern is determined by selecting one PTV per endpoint category (reproduction/development, survival, and adult weight/size changes) represented in an experiment. If

three or more PTVs exist, a geometric mean (GMM) TRV is calculated. If less than three PTVs are available, professional judgment is used to select the PTV associated with the most applicable study, measurement endpoint, and effect level to derive a critical study (CS) TRV. Uncertainty factors (UFs) are applied to achieve a TRV equivalent to a chronic NOAEL or NOEC where necessary. A summary describing the basis for the TRV is written. This discussion describes the importance of the TRV in protection of wildlife, invertebrate, or plant populations; the data set considered for the selection of the TRV; the justification to support this selection; and the aspects of the study or studies that relate it to the environmental concerns for LANL. Also, UF explanations and calculations are noted.

Professional judgment considers ecological relevance and is peer reviewed for greater consistency in selection of values.

A-1.2.4 Part 4, TRV Approval

Once a TRV is derived, whether it is a GMM or CS TRV, the value and its supporting documentation are peer reviewed by LANL's Environmental Programs (EP) Directorate's Risk Assessment Team to gain approval of the TRV for use in calculations of ESLs in the Ecorisk Database.

A-2.0 PTSE PART 1, DATA EXTRACTION

The PTSE Part 1 consists of four separate tables of data entry. Information is entered into these tables by way of Microsoft Access database forms. There are tables for reference, chemical, experiment, and effect detail information; therefore, the data entry follows this order to ensure the connection of the appropriate Ref IDs with the chemical, experiment, and experiment effect IDs. Also, for control purposes (i.e., maintaining the latest versions of object format and data), PTSE reviewer initials are entered more than once throughout the data entry process to ensure that each record in each table is tracked by reviewer and date.

Each specific field entry (e.g., codes selected from a drop-down list) is usually followed by a comments field to allow the reviewer to further elaborate on the selection and any relevant assumptions. The following sections focus on the specific fields, but will also discuss the types and examples of comments that may be entered in the corresponding comments field.

A-2.1 Data Entry

Data entry is broken down into four parts: reference and reviewer information, chemical information, experiment information, and measurements and results. Each of these parts has its own table in the Part 1 data-entry database where data are recorded. However, the data are typed into or presented in database forms for easier entry and editing of information.

A-2.1.1 Reference and Reviewer Information

Reference ID

The PTSE Ref ID is entered here (see section A-1.1 for a description of the Ref ID).

Reference Summary

A brief description of the reference and its experiments is written here. This description includes the test organism, chemical, route, medium of exposure, and length of chemical administration for each experiment and also summarizes key differences between experiments, if applicable. Also, the basis for not developing a TRV (e.g., the exposure route is injection, or one of multiple chemicals administered in the study is not a chemical of concern) is noted at the end of the reference description. In addition, the reference summary may describe why the focus of the review is placed on a particular experiment or experiments and not on others. See Example A-1.

Example A-1 Reference Summaries

(a) Barley (*Hordeum vulgare*) was the test organism used to evaluate the toxicity of copper (Cu+2) or chromium (Cr+6) in two types of soil: artificial and natural forest soil. The nominal exposure concentrations used were 0.1, 1, 10, 100, and 1000 µg/g dry soil for copper and chromium experiments. The endpoints evaluated include plant emergence and shoot and root growth (both 5- and 14-d). Additionally, the levels of copper or chromium in the plant tissues were assessed, but this will not be evaluated in this PTSE because there is not a clear connection between tissue burdens and adverse effects to population health. Additionally, only the 14-d plant emergence measurement will be considered in this evaluation because it is a more chronic measurement than 5-d plant emergence, considering it took place at the end of exposure. A reference toxicant, HgCl2, also contributed to another exposure group, but it and its effects will not be evaluated because the results do not give any additional information about the toxicity of copper or chromium.

(b) Fischer 344 rats were intermittently exposed to 0-, 150-, 475-, or 1500-ppm chloromethane by way of inhalation. In the first of two experiments, 40 males and 80 females were exposed to chloromethane for 6 h/d, 5 d/wk for 10 wk. After 10 wk, inhalation occurred for 6 h/d, 7 d/wk during the 2-wk mating season where one male was mated to two exposed females. The females were continued on the 6-h/d, 7-d/wk exposure regimen from the start of mating through postnatal day 28, except from gestation day 18 to postnatal day 4, while 10 males from each group were necropsied. Pups from this experiment were not directly exposed to the chemical until after weaning, and then they were put through the same exposure and mating regimen as their parents. In the second experiment, the remaining 30 males from each group in the first experiment were then mated to unexposed females for another 2 wk. Adult body weight, litter parameters (e.g., pup survival, pup weight), gross pathology, and histopathology were observed. The second experiment is not reviewed in this Part 1 in favor of the more chronic exposure period in the multigenerational experiment.

Reviewer Initials

The initials of the person responsible for completing the PTSE are selected from the drop-down list.

Review Start and Finish Date

The dates the review is started and finished are reported here. If a change is made in the reference summary, the date of the change supersedes the finish date. Dates are entered for each record in the tables of the data-entry database for purposes of data control and ensuring the latest information is present in the latest release of the Ecorisk Database.

A-2.1.2 Chemical Information

Chemical ID

The analyte code for the chemical of concern is selected from the drop-down list. Analyte codes follow Johnston (1997, 059791, Ref ID 0576). Generally, the Chemical Abstracts Service Registry Numbers are used for organic compounds (e.g., 11097-69-1 for Aroclor-1254) while element abbreviations are used for inorganic chemicals (e.g., CD for cadmium). Further identification occurs for forms of inorganic chemicals, such as hexavalent chromium vs. trivalent chromium, where the analyte code for these forms are CR(+6) and CR(+3), respectively. Also, chemicals with organic and inorganic forms are also coded differently to distinguish between them (e.g., HGI for inorganic mercury and HGM for methyl mercury).

Reviewer Initials

The initials of the person responsible for completing the chemical details in the PTSE are selected from the drop-down list.

Record Date

The date the chemical record was created is typed into this field.

A-2.1.3 Experiment Information

Experiment ID

The experiment ID consists of the Ecorisk Database Ref ID, chemical ID (analyte code), and experiment number in the format of Ref ID_analyte code_experiment number (see Example A-2).

Example A-2 Experiment IDs

0025_SE_1

0517_50-29-3_2

As mentioned previously, the Ref ID is a unique identifier assigned to each reference for tracking during the literature search, review, and evaluation process. The analyte code is a unique identifier assigned by the reviewer following guidelines set forth in Johnston (1997, 059791, Ref ID 0576) for each element and compound. The experiment number is based on the actual number of experiments reported in a reference. For the purposes of the PTSE process, an experiment is defined by a unique set of exposure parameters (i.e., one chemical administration period, one exposure frequency type, one test organism, one chemical, one exposure medium, one exposure route, and one set of exposure concentrations). The reviewer may have to use his or her own judgment in delineating unique experimental scenarios.

Experiment Purpose

The purpose(s) of the experiment is noted here. Also, since each experiment has its own record in the Part 1 database, a brief description of the test organism, exposure route and medium, and length of chemical administration is entered in this field in order for the reviewer and user of the database to distinguish between experiments (see Example A-3).

Example A-3 Experiment Purposes

(a) The purpose of the study was to see whether selenium levels similar to those found in raptor prey items from selenium-contaminated environments would affect reproduction in captive eastern screech-owls. The screech-owls were fed a diet containing 0, 4.4, or 13.2 ppm wet weight of selenium in the form of selenomethionine. Growth, reproduction, and liver biochemistry effects were studied.

(b) Authors emphasize the importance of earthworms as a biomonitoring tool for assessing the impact of chemicals in soil quality and fauna. In order to use them as a biomonitoring tool successfully, the effects of various chemicals on earthworms needs to be studied. The investigators determined the effect of zinc on the growth and reproduction of earthworms during a 20-wk study.

Reviewer

The initials of the person responsible for completing the experiment details in the PTSE are selected from the drop-down list.

Review Date

The date the experiment record is created is typed into this field.

Organism Type ID

The test organisms are classified into the following categories and coded accordingly:

SLE soil and/or litter earthworm

TB terrestrial bird

TM terrestrial mammal

TP terrestrial plant

The appropriate code for the test organism of concern in the PTSE is selected from the drop-down list.

Organism Name

At a minimum, the common name of the test organism is reported in the reference. In cases where the scientific name is not reported, various references are consulted to find it. This is done to later assess the taxonomic relationship of test species to ecological screening receptor species of concern, especially for bird and mammal receptors. The common name of the organism is selected from a drop-down list that is linked to the test species table. If the name is not found on the list, the name can be typed in. However, the information is still added to the test species table so that it appears on the drop-down list in the future.

Examples of sources consulted for scientific names include

- National Geographic Society, 1987. *Field Guide to the Birds of North America*, 2nd Ed., Washington, D.C., 464 pp. (Note: Later editions are available and may have more updated records on names as a result of merging or division of species.)
- Burt, W. H., and R. P. Grossenheider, 1980. *A Field Guide to the Mammals: North America North of Mexico*, Houghton Mifflin Company, New York, New York, 289 pp.
- BIOSIS. Index to Organism Names (http://www.organismnames.com/)
- New Mexico Game and Fish Biota System Information of New Mexico (BISON-M) http://www.bison-m.org/databasequery.aspx

Author's Reason for Studying this Particular Test Organism

If it is explicitly stated why the author(s) chose to use a particular species of test organism (e.g., Oldfield mouse, *Peromyscus polionotus*) in their research, the reasons are paraphrased. If it is not clearly stated, but the purpose can be deduced for the use of the general organism type (e.g., mouse or rodent), the reasons are noted. However, the reviewer clarifies that these reasons noted are assumptions. For example, if in the introduction of a paper, the authors discuss case histories describing the effects of trichloroethylene inhalation exposure in humans, and they also discuss previous studies of exposure of trichloroethylene to laboratory mammals, it can be reasonably assumed that their choice of the test organism is used as an experimental model to gauge potential effects that may occur in humans (see Example A-4).

Example A-4 Author's Reason for Studying this Particular Test Organism

(a) The investigators wished to use the same standard toxicity test organisms as described in the Organisation for Economic Co-operation and Development (OECD) contact and artificial soil testing procedures (OECD 1984, 109940, Ref ID 1235). This enabled them to focus on determining influences of contact tests and soil characteristics (pH and organic matter content) on toxicity in the earthworms and compare their data with others.

(b) It is unknown why the authors specifically chose mallards over other aquatic birds, but it is assumed they considered them to be representative of aquatic birds in order to study cadmium toxicity in waterfowl.

Age or Life Stage

The age or life stage of a test organism is coded because later in the Part 1 PTSE process, this information is needed to gauge whether or not measurements occurred during a critical life stage (see Focus Measurement Critical Life Stage Category in section A-2.1.4). Coding for age/life stage of the test organism adheres to the conventions presented in Table A-3.

Table A-3
Age Categories, Codes, and Definitions

Age Category ID	Age Category	Definition
BrA_Unk	Bird Adult	Bird is known to be in reproductive condition or is otherwise mature, but it is unknown if it is breeding for the first time or at later stages.
BrA1	Bird Adult 1	Bird reaches sexual maturity and breeds for the first time.
BrA2	Bird Adult 2	Bird survives to breed at older age.
BrE	Bird Embryo	Fertilization occurs and embryo develops inside an eggshell until hatched.
BrG	Bird Gamete	Unfertilized egg and sperm
BrJ_Unk	Bird Juvenile	Bird is said to be a juvenile but exact phase is unknown.
BrJ1	Bird Juvenile 1	Hatchling, chick, or nestling grows until flight feathers are developed.
BrJ2	Bird Juvenile 2	Sexually immature fledgling or poult that undergoes additional development prior to breeding condition
BrLC	Bird Life Cycle	All life stages
EwA_Unk	Earthworm Adult	Earthworm is known to be in reproductive condition or is otherwise mature, but it is unknown if it is breeding for the first time or at later stages.
EwA1	Earthworm Adult 1	Sexually mature worm (with clitellum) breeds for the first time.
EwA2	Earthworm Adult 2	Earthworm survives to breed at older age.
EwE	Earthworm Cocoon or Embryo	External fertilization, cocoon formation, embryo development, and worm emergence from cocoon
EwG	Earthworm Gamete	Unfertilized egg and sperm
EwJ1	Earthworm Juvenile	Small worm grows until it reaches reproductive condition.
EwLC	Earthworm Life Cycle	All life stages
MmA_Unk	Mammal Adult	Mammal is known to be in reproductive condition or is otherwise mature, but it is unknown if it is breeding for the first time or at later stages.
MmA1	Mammal Adult 1	Mammal reaches sexual maturity and breeds for the first time.
MmA2	Mammal Adult 2	Mammal survives to breed at older age.
MmE	Mammal Embryo or Fetus	*In utero* organism developing from fertilized egg to birth
MmG	Mammal Gamete	Unfertilized egg and sperm
MmJ_Unk	Mammal Juvenile	Mammal is said to be a juvenile but exact phase is unknown.
MmJ1	Mammal Juvenile 1	Newborn mammal obtaining all or most of its nutrition by nursing until weaning
MmJ2	Mammal Juvenile 2	Immature mammal growing from weaning to more or less adult size and appearance. The typical “juvenile” stage.
MmJ3	Mammal Juvenile 3	Period of additional development is required or time must pass until the organism may breed (next season). Often independent from parents, “subadult.”

Table A-3 (continued)

Age Category ID	Age Category	Definition
MmLC	Mammal Life Cycle	All life stages
Pa_Unk	Plant (Annual) Unknown Age/Stage	Not enough information was provided or found to determine what life stage this plant age represents.
PaA1	Plant (Annual) Flowering and Seed Set	Plant is fertilized and seeds develop and disperse.
PaE	Plant (Annual) Seed	Embryo inside seed
PaG	Plant (Annual) Gamete	Unfertilized ova and pollen
PaM	Plant (Annual) Mature	Plant is known to be at a mature stage but it is unknown how else to classify this stage.
PaS_Unk	Plant (Annual) Seedling	Plant is a seedling but it is uncertain/unknown with regards to whether seedling is closer to a sprouting stage or closer to reproductive stage.
PaS1	Plant (Annual) Seedling	Seed sprouts, grows to emerge from soil, and leaves open or some minimum size is attained.
PaS2	Plant (Annual) Seedling 2	Plant continues to grow until reproductive stage achieved.
Po_Unk	Plant (Other) Unknown Age/Stage	Not enough information was provided or found to determine what life stage this plant age represents.
PoA_Unk	Plant (Other)	Plant is in mature, reproductive condition but it is unknown if it is fertilized for the first time or if it is a larger individual producing seeds.
PoA1	Plant (Other) Flowering and Seed Set	Plant is fertilized and seeds develop and disperse.
PoA2	Plant (Other) Larger Reproducing Plant	Larger individuals producing seeds
PoE	Plant (Other) Seed	Embryo inside seed
PoG	Plant (Other) Gamete	Unfertilized ova and pollen
PoLC	Plant (Other) Life Cycle	All life stages
PoM	Plant (Other) Mature	Plant is known to be at a mature stage but it is unknown how else to classify this stage.
PoS_Unk	Plant (Other) Seedling/Sapling	Plant is a seedling but it is uncertain/unknown with regard to whether seedling is closer to a sprouting stage or closer to reproductive stage.
PoS1	Plant (Other) Seedling/Sapling 1	Seed sprouts, grows to emerge from soil, and leaves open or some minimum size is attained.
PoS2	Plant (Other) Seedling/Sapling 2	Plant continues to grow until reproductive stage achieved.

If the age or life stage of a bird or mammal test organism is not provided but body weight is, an age or life stage is estimated for the organism based on other reference sources containing similar organisms, body weights, and age information.

The age coding task becomes difficult when placing organisms in categories that are borderline juvenile/adult or seedling/adult. If more information is needed, related information is first sought in the toxicity references currently on hand for the Ecorisk Database. For example, if a primary toxicity reference states the mouse was 6 wk old at the time of exposure, and it is difficult to determine whether to code this

age as a juvenile or an adult, information in the database is reviewed to find similar records containing mice to see if a correlation can be made between ages and life stages. When information such as this cannot be found in the existing references, additional references specific to the test organism species or genera are consulted, and a note summarizing the information is recorded in the age or life stage comment field of the database.

Organism Sex

The genders of the test organisms that are directly exposed to the chemical are selected from the drop-down list (Ml for male, Fm for female, or MF for male and female). This field is not applicable (N/A) for invertebrates and plants. If the sex is not reported (NR), NR is selected.

If a situation arises where only the females were exposed to the chemical, and they were then bred with untreated males, the code Fm is entered for sex, and a note of this arrangement is made in the associated comment field. Likewise, if only males were exposed, Ml is entered, and any related notes are made in the comment field.

Organism Source/Origin

The location of where the test organism was obtained, bred, or collected is noted here. Any other relevant information about the organism (such as if the organism was pathogen-free) is also noted in this field.

Dose Rate Parameters

Dose rate parameters are selected to calculate the most reasonably conservative dose rate to represent the TRV; therefore, TRVs and ESLs are conservative, protective values.

Dose rate parameters other than exposure concentrations (i.e., body weights and ingestion or inhalation rates) reported in the study are recorded here for later use in calculating the PTV(s) (see section A-3.2). Exposure concentrations are recorded later in the Part 1 experiment details. For the dose rate parameters, the aim is to use values that will lead to the most conservative PTV in units of mg chemical/kg body weight/d for birds and mammals. Dose rate parameters are not needed for invertebrates or plants because the dose concentration (in mg/kg) is used for the TRV itself. Note: Default values of 999, N/A, and N/A are entered into the value, units, and comment fields, respectively, for invertebrate and plant studies.[2]

Author-Reported Daily Dose Rates for Bird and Mammal Studies

If the exposure concentrations presented in the study are already in, or can be easily converted to, units of mg chemical/kg body weight/d, dose parameters and calculations for a daily dose rate are not needed, and this is indicated in the appropriate fields. However, if dose rate parameters are provided in the study, information is still recorded with the expectation that they may be used for other studies where the parameters are not available but are needed for similar test organisms.

[2] In the early developmental stages of the Ecorisk Database, dose rate parameters may have been considered inapplicable, and the default value of 999 was used. The dose rate parameter may have not been reported if the authors already provided daily dose rates or if the ingestion rates were already normalized to body weight. In these cases, the dose rate parameter was, and still is, not needed for PTV calculation, but it is now reported for possible future use in other areas of the database.

Author-Reported Exposure Concentrations Other than Daily Dose Rates for Bird and Mammal Studies

If the exposure levels are presented as concentrations of chemical in the exposure medium (such as mg/kg food, mg/mL water, or mg air/m^3), the body weight (in kg) and food or water ingestion rate (in kg food/d or L/d, respectively) or inhalation rate (in m^3/d) dose rate parameters are needed to calculate the PTV in mg chemical/kg body weight/d.

Reporting Dose Rate Parameters

Table A-4 provides scenarios of how dose rate parameters may be reported in the primary toxicity study and how the parameter is reported in the dose rate parameter field in the database.

Table A-4
Scenarios of Dose Rate Parameter Information Reported in Primary Toxicity Studies and How Body Weight Values are Reported in the PTSE Part 1 Data-Entry Database Field for Body Weight

Scenario	Report
Dose rate parameter for controls was measured at intervals throughout the study	Average of all values throughout study[a]
	If values are grouped according to male and female organisms, the average of the male or female values that will lead to a more conservative PTV is used.[b]
Dose rate parameter for controls were measured at beginning and at end of study	Average of the two values[a]
	If values are grouped according to male and female organisms, the average of the male or female values that will lead to a more conservative PTV is used.[b]
Dose rate parameter for controls was measured at beginning of study only.	Measured value
Range of dose rate parameters for controls or all organisms at beginning of study	Either end of this range, depending on which value will lead to a more conservative PTV[b]
	If body weights are grouped according to male and female organisms, the average weight that will produce a more conservative PTV is used.[b]
No dose rate parameter information for controls, only treated organisms	The average of the beginning value of treated organisms, before chemical exposure began[c]
No dose rate parameters reported at all	Default value of 999

[a] In situations where dose rate parameters are measured and provided throughout the study, an average is calculated from those measurements to provide an estimate that is representative of the organism at all stages throughout the study.

[b] The general rule is that if there are dose rate parameters reported for male and female groups, or if a range of dose rate parameters is reported, either the lower or higher average value is used because this value, when used in the PTV calculation, will lead to a more conservative PTV. For example, a larger value for the body weight leads to a lower PTV (see Example A-5a), thus the PTV is more protective. On the other hand, a lower value for an oral ingestion rate leads to a higher PTV (see Example A-5b).

[c] The average of the beginning weight of the organisms in a treatment group before exposure begins is used, rather than the average of the weights throughout the study, because the weights throughout the study may be affected by chemical exposure. Therefore, the daily dose calculation may be influenced if the affected body weights are used, and it may not be representative of a daily dose that would affect a healthy individual.

Example A-5 The Selection of Dose Rate Parameters to Provide the Most Protective PTV

Note: Explanations of PTV calculations are more detailed in section A-3.0, PTSE Part 2, Study Evaluation and Primary Toxicity Value Calculation.

(a) Higher vs. lower body weight: A higher body weight leads to a lower PTV when used in the denominator. The following calculations demonstrate the difference by holding the concentration (100 mg/kg) and food ingestion rate (0.0055 kg/d) constant and using body weights of 0.03 and 0.09 kg.

Lower weight:

$$\text{PTV (mg/kg/d)} = \frac{100\ \text{mg/kg} * 0.0055\ \text{kg/d}}{0.03\ \text{kg}} = 18.3\ \text{mg/kg/d}$$

Higher weight:

$$\text{PTV (mg/kg/d)} = \frac{100\ \text{mg/kg} * 0.0055\ \text{kg/d}}{0.09\ \text{kg}} = 6.1\ \text{mg/kg/d}$$

(b) Higher vs. lower ingestion rate or inhalation rate: A lower ingestion or inhalation rate leads to a lower PTV. Since these parameters take the same location in the equation and therefore have the same type of influence on the PTV, only the use of water ingestion will be used to demonstrate the difference. The following calculations hold the concentration of 5 mg/L and body weight of 0.03 kg constant, while using the water ingestion rates of 0.0075 and 0.009 L/d.

Lower ingestion rate:

$$\text{PTV (mg/kg/d)} = \frac{5\ \text{mg/L} * 0.0075\ \text{L/d}}{0.03\ \text{kg}} = 1.25\ \text{mg/kg/d}$$

Higher ingestion rate:

$$\text{PTV (mg/kg/d)} = \frac{5\ \text{mg/L} * 0.009\ \text{L/d}}{0.03\ \text{kg}} = 1.5\ \text{mg/kg/d}$$

Exposure Environment

If the study was conducted in a laboratory, a greenhouse, or some other controlled environment, it is marked as a laboratory study. Lab is selected from the drop-down list. If the study was a field study conducted under uncontrolled environmental variables, it is noted as a field study and Fld is selected from the drop-down list. Physical descriptions of the laboratory or greenhouse environment, what the test organisms were housed in, controlled variables (such as temperature and humidity), and other relevant information are noted in the corresponding comment field.

Test Chemical Form (for Inorganic Chemicals Only)

If the chemical administered is inorganic, the compound as it is administered in the study is selected from a master pull-down list of chemicals maintained in a separate analyte table. If the compound cannot be found, it must be added to the master list of analytes in the Ecorisk Database before this field can be filled. If the chemical is organic, the default value of N/A is left in the field.

Test Chemical Description/Source

The purity of the chemical and the company it was purchased from are noted in this field. If the chemical was synthesized by the researchers of the study itself, a brief summary of the process is described.

Exposure Medium

The medium in which the chemical was administered is noted here. A brief description of any relevant information pertaining to the incorporation of the chemical into the medium and properties of the exposure medium is noted in the comment field. In inhalation exposure studies, a brief description of how the vapors were generated is reported in the comment field as well. Exposure medium codes and descriptions are presented in Table A-5.

Table A-5
Codes and Descriptions for Exposure Media

Code	Description
AIR	Air. Used in inhalation exposure studies.
AQS	Aqueous solution. Used in plant studies or as an injection vehicle in bird and mammal studies.
CHM	Chemical only. Used if only the chemical is administered. The chemical is not dissolved in solution, oil, or any other media.
DW	Drinking water
DW+F	Drinking water plus food. Drinking water is the primary exposure medium while a background concentration is reported in the food.
F	Food
F+DW	Food plus drinking water. Food is the primary exposure medium while a background concentration is reported in the drinking water.
FLPP	Filter paper. Used in contact tests with earthworms.
MNU	Manure. Used in earthworm studies.
NR	Not reported
NSOLN	Nutrient solution. Used in plant studies.
OIL	Oil. Used if the exposure medium is known to be an oil solution but type is not specified
OIL_ACHS	Arachis oil. Often used as a vehicle in oral gavage or injection studies.
OIL_CORN	Corn oil. Often used as a vehicle in oral gavage or injection studies.
OIL_O	Other oil. Used if the exposure medium is known to be an oil solution but is a mixture of different types or other types not listed.
OIL_PNT	Peanut oil. Often used as a vehicle in oral gavage or injection studies.
OTH	Other. Exposure medium not listed. Specifics are noted in the corresponding comment field.
SAND	Sand
SAND&OM	Sand and organic matter mixture
SAND_CLTR	Sand culture. A solution is washed through silver sand daily.
SOIL	Soil
SOIL&MNU	Soil and manure mixture. Manure is usually used as a food source for earthworms.
SOIL&SAND	1:1 soil and sand mixture

Table A-5 (continued)

Code	Description
SOIL&SLDG	Soil and sludge mixture
SOLN	Solution. Exposure medium is assumed to be a solution but type is unknown.
SOLN_AQS	Aqueous solution. Used if the chemical was inorganic, and it was assumed the chemical is dissolved in an aqueous solution.
SOLN_O	Other solution. Used only if the exposure medium is assumed to be a solution of mixed composition or one not listed.
SOLN_OIL	Oil solution. Assumed.
W	Water

Exposure Medium Background Data

Any background concentrations of chemicals that have the potential to impact the toxicity of the chemical of concern in soil, water, food, or air are noted here. In cases where the authors provide verified concentrations of the chemical in the control medium, this concentration is entered as background data. Compositions of fertilizer added to soil and any other supplemental substances are also noted here.

Exposure Route ID

The exposure route code is selected from the drop-down list. Any further information relevant to the exposure route is noted in the comment field. For inhalation exposure studies, this comment field describes the inhalation chamber conditions (e.g., temperature, air flow). Exposure route codes and descriptions are presented in Table A-6.

Table A-6
Codes and Descriptions for Exposure Routes

Code	Description
ALL	All exposure routes are used for chemical administration.
DC_SED	Direct contact in sediment
DC_W	Direct contact in water
DERM	Dermal contact (filter paper)
INH	Inhalation
INJ_EGG	Injection (egg)
INJ_IP	Injection (intraperitoneal)
INJ_IV	Injection (intravenous)
NR	Not reported
O	Oral
O/D	Oral and dermal
OC	Oral (capsule)
OD	Oral (diet)
OD+W	Oral (diet) plus exposure in drinking water

Table A-6 (continued)

Code	Description
OG	Oral (gavage)
OI	Oral (intubation)
OTH	Other
OW	Oral (water)
OW+D	Oral (water) plus exposure in food
U	Uptake (unknown whether through roots, seed coat, or both)
U_R	Uptake via roots
U_SC	Uptake via seed coat
U_SC+R	Uptake via seed coat and roots

Length of Chemical Administration

The length of the chemical administration is briefly described here. If the exposure was intermittent (e.g., 4 h/d, 5 d/wk, for 7 wk), the total length of time over which the chemical was administered is reported (e.g., 7 wk). The chemical administration period for purposes of the Ecorisk Database is synonymous with the term exposure duration or period. The terms “chemical administration period” or “length of chemical administration” are used to clarify the difference between exposure duration and test period; test period includes both chemical administration and any periods during the study in which the organisms are acclimatized before exposure or further observed after exposure has ceased.

Chemical Administration ID

The exposure duration code is selected from a drop-down list. The definitions and coding for exposure duration categories are shown in Table A-7. The exposure duration categories follow EPA (1999, 070923, Ref ID 0716).

Table A-7
Exposure Duration Categories and IDs for Birds, Mammals, Earthworms, and Plants

Duration	ID	Birds and Mammals	Earthworms and Plants
Chronic	C	91 d or more	7 d or more
Subchronic	SC	14 to 91 d	3 to 6 d
Acute	A	13 d or less	2 d or less
Single dose	SD	One-time administration	One-time administration

Exposure Frequency

The frequency of the chemical administration is noted here. For food and drinking water studies, it is often a continuous exposure where the exposure medium was provided throughout (also called *ad libitum*) the study. In inhalation exposure studies, the exposure frequency is either continuous or intermittent. In intermittent exposures, test organisms inhaled the chemical vapors for a certain number of hours per day

and number of days per week for a certain study length (e.g., 4 h/d, 5 d/wk, for 10 wk). In continuous exposures, the test organisms are exposed for 24 h/d, 7 d/wk.

Control Group Exposure Concentration(s) and Comment

If a background concentration of the chemical of concern was reported in the primary exposure medium in addition to the administered amount, this concentration and its units are reported here. If no background concentrations were reported, a value of 0 mg/kg for soil or food, 0 mg/L for water, or 0 ppm for air is assumed.

Exposure Group Exposure Concentration(s) and Comment

The concentrations of the treatment groups are noted here along with their units. If a background concentration was present in the primary exposure medium, this concentration is added to the basal concentration. If nominal (target) and empirical (verified or measured) concentrations are both provided, the verified concentrations are reported in the value field, and the target concentrations are noted in the comment field.

Nominal (Target) or Empirical (Verified or Measured) Concentration

If it was not explicitly stated whether the concentration was nominal (target) or empirical (verified or measured), the concentration is assumed to be nominal (Nom). Otherwise, Nom or empirical (Emp) is noted based upon the information provided in the reference. If both nominal and empirical values were present, the empirical values are preferred over the nominal values, and the field is marked with Emp. Empirical values are preferred because they represent concentrations in the exposure medium that were analyzed and thus measured or verified; therefore, the empirical concentrations more accurately represent the concentrations that are available to the test organisms via the exposure medium. The nominal (target) concentrations are noted in the associated comment field. There are two fields for this data entry, one each for control and exposure groups, along with associated comment fields.

Dry or Wet Weight

If the moisture basis of the concentration in the medium is not explicitly stated, NR is entered into the field. If the exposure route is oral by way of inhalation or by drinking water, gavage, intubation, or capsule, N/A is the entry. Otherwise, the moisture basis of the food or soil exposure medium is noted as WW for wet weight or DWt for dry weight. If both dry weights and wet weights are available from a study, dry weights are preferred. Dry weights are preferred because they eliminate variations in the PTV as a result of the wide variation of moisture contents of exposure media; the weights of the media are more easily compared when reported in dry weight. Furthermore, dry weight is the moisture basis of the TRV required for ESL calculations. There are two fields for this data entry, one each for control and exposure groups.[3]

[3] During the early developmental stages of the Ecorisk Database, studies using exposure media of filter paper, aqueous solutions, and nutrient solutions for invertebrates and plants were evaluated. The moisture basis for these media was N/A. However, as more attention was placed on how well certain types of exposure media approximated the environmental exposure medium of concern (soil), these studies were not considered representative. Now, experiments containing these types of media are not evaluated.

Number of Individuals per Group

The number of test organisms in each control and exposure group is noted. There are two fields for this data entry, one each for control and exposure groups.

Number of Sex per Group

The number of females and/or males in each control and exposure group is noted. There are two fields for this data entry, one each for control and exposure groups.

Number of Replicates per Group

If the number of replicates per control or exposure group was not clearly identified in a study, usually the number of individual organisms or sexual pairs that were caged separately is a suitable substitute. There are two fields for this data entry, one each for control and exposure groups.

Soil Characteristics (for Plant Studies Only)

When the study is not a plant study, N/A is the default entry.

Soil Type

The soil type and content are reported. Any other information not presented in the other fields of the soil characteristics section is also noted. See Example A-6.

Example A-6 Soil Characteristics

(a) Phaeosem, 3.85% sand, 74.90% silt, and 21.25% loam, water-holding capacity of 55.5%

(b) Ap horizon

(c) Sterilized shredded peat moss passed through 2-mm soil sieve and white silica sand. Base saturation of 93.9.

Soil Organic Matter

If provided, the percent of organic matter (%OM) content in the soil medium is noted. If percent total organic carbon (OC), particulate OC, or just OC was reported, it is converted to OM as follows:

$$\%OM = 1.72 * \%OC$$

The notes regarding the conversion, including the source reference (EPA 2003, 85643; Ref ID 1400), are placed in the soil %OM field. If the percent of OM was not provided in the study but the percent content of sphagnum peat moss was, the percent content of the moss is considered to be equivalent to the percent of OM and is reported as so.

Soil Cation Exchange Capacity

If provided in the study, the cation exchange capacity (CEC) in meq/100 g of soil is reported. If the CEC is not provided, NR is entered.

Soil pH

If provided, the soil pH is reported here. If the soil pH is not provided, NR is entered.

Growth Medium Characteristics (for Invertebrate Studies Only)

When the study is not an invertebrate study, N/A is the default entry.

Growth Medium Type

The soil type and content are reported. Any other information not presented in the remaining soil characteristics section is also noted. See Example A-7.

Example A-7 Growth Medium Types

(a) Petri dish with 30 g (dry mass) of screened soil mixed with aged horse manure (75% moisture)

(b) Sand (0.2- to 2-mm particle size) from C horizon mixed with well-decomposed cattle dung (1:2, vol:vol)

(c) Sandy loam soil with 17% clay, 5.5% $CaCO_3$

Growth Medium Organic Carbon

If provided, the percent of organic carbon (%OC) content in the soil medium is noted. It is converted from %OM using the following equation:

$$\%OC = \frac{\%OM}{1.72}$$

The conversion is noted along with the source reference of EPA (2003, 085643, Ref ID 1400) in the exposure medium field.

Growth Medium pH

If provided, the growth medium pH is reported here. If it is not provided, NR is entered.

Growth Medium Percent Moisture

If provided, the moisture content of the growth medium is reported. If it is not provided, NR is entered.

Food

If food for the earthworm was also provided in the soil, and it was explicitly noted as such or reasonably deduced, it is reported here. Examples are manure and litter.

Organic Matter ID (for both Plant and Invertebrate Studies)

If the %OM content in the soil or growth medium was 10% or less, it is coded as low. If the %OM was greater than 10%, it is coded as high. The high and low IDs are based on EPA (2003, 085643,

Ref ID 1400), where studies are rejected if the soil exposure medium contains greater than 10% OM because OM may affect the bioavailability of the test chemical to the organism. If OM is not reported, NR is entered and the study is excluded from the rest of the PTSE process. Otherwise, the entry is N/A for bird and mammal studies.

If %OC was reported, it is converted to %OM for the determination of the OM ID. If both the %OC and the percent content of sphagnum peat moss were reported, the content of the peat moss is used to set the OM ID.

All Measurements Reported

All measurement endpoints in the study are listed, regardless of whether they are ecologically relevant or not. The purpose of this field is to provide a complete listing of the various measurements applied in the experiment so that users of the database know what was measured, and if they feel a measurement is ecologically relevant but is not evaluated in the PTSE, they can obtain the reference and further supplement their information.

Measurements Not Evaluated and Why

The measurement endpoints that are not evaluated in the PTSE are listed here. These include “other” effects, such as physiological functions, histopathology, cancer, and behavior (see Focus Measurement Category in section A-2.1.4), as well as any ecologically relevant measurements that are accounted for within measurements that are evaluated. If a plant study reported measurements of both fresh and dry weight values of leaves, only the dry weight information would be evaluated. The fresh weight information would not be evaluated and the reason why (i.e., dry weight is a more accurate measurement of the true mass of the plant because it eliminates the additional weight that is dependent upon varying moisture content of individual plants) is noted in this field. Another example would be to evaluate the percent mortality of juveniles but not the number of juveniles that died because the number of juveniles that died is incorporated as a percentage of the total number of juveniles in the experiment. The number of juveniles died would be reported in the measurements not evaluated and why field along with the explanation of why it was not evaluated. See Example A-8.

Example A-8 Measurements Not Evaluated and Why

(a) Food consumption, organ weights, hematocrits, hemoglobin concentrations, gross pathology, and organ, blood, and egg residues will not be evaluated in this Part 1 review because their relationships to adverse effects on population health are not clear.

(b) Food consumption, testes weight, liver weight, liver manganese, serum T, and general locomotor activities are not evaluated in this Part 1 because their relationships to population health are not clear. Body weight is not considered in this Part 1 because it is part of the growth rate measurement, which is already accounted for in this Part 1 review.

Author-Reported Effect Levels

If the authors calculated their own effect levels, these are reported in this field. The LC_{50} (or LD_{50}) or EC_{50} (or median effective dose, or ED_{50}) are most often the effect levels reported. NOAELs/NOECs and LOAELs/LOECs are also reported. The endpoints that the reported effect levels represent are also specified.

Experiment Comments/Author Conclusions

An overall summary of the data is presented for the reference, along with mention of any other factors that may have contributed to or confounded the results of the focus measurements in the experiment (e.g., mortality attributed to an infection outbreak and not the chemical exposure). Also, any further general observations on focus measurements not carried forth to Part 2 reviews may be reported here. Page numbers and table or figure designators from the reference should be included to support the comments.

A-2.1.4 Measurements and Results

Focus measurements (endpoints) that are evaluated in the Part 1 PTSE are limited to reproduction, development, survival, weight changes of adult or mature organism, and size changes of adult or mature organism. Only these categories are evaluated because they are ecologically relevant. In other words, these types of measurements are more directly linked with population health. Adverse effects observed in "other" endpoints, such as seminiferous tubule diameter, require too much speculation as to the degree of their impact on population health and are thus not evaluated in the PTSE process.

Focus Measurement Effect ID

Experiment effect IDs are created by simply adding an alphabetic identifier to the end of the experiment ID for each focus measurement (see Example A-9).

Example A-9	**Experiment Effect IDs**
0025_SE_1A	
0025_SE_1B	
0025_SE_2A	
0517_50-29-3_2A	

Focus Measurement

A focus measurement label is provided in the focus measurement field. The label should follow the labeling present in the study, but exceptions occur where symbols such as # are replaced with the word "number" or phrase "number of," where % is replaced with the word "percent" or "percentage," or where / (slash) is replaced with the word "per" for clarification and for data consistency.

Focus Measurement Category

The category of the focus measurement is then coded and entered in this field (see Table A-8).

Table A-8
Category Codes and Descriptions for Focus Measurements

Code	Description
WC	Weight change (adult)
NR	Not reported
O	Other
R/D	Reproduction/development
S	Survival
SzC	Size change (adult)

Reproduction/Development

If development or mortality was measured in juvenile organisms or immature plants and they were exposed to the chemical through parental exposure, the measurement is coded as reproduction/development (R/D) because it is considered to be a measurement of the ability of the parents to produce offspring that can develop into reproductive adults, and exposure reflects the reproductive cycle. Growth of a juvenile organism or immature plant that was directly exposed to the chemical is coded as R/D because it reflects the potential for the juvenile or immature plant to develop normally into a reproductive adult.

Adult Weight or Size Changes

If weight change for mature organisms is measured, it is considered a weight change and not development. Likewise, if a change occurs in size of a mature organism (e.g., height or root length of plants), it is noted as a size change.

Survival

If a juvenile organism or immature plant was directly exposed to the chemical, mortality is coded as S (survival) because it is considered a measurement of the ability of the organism to survive to reproductive maturity, and the exposure did not occur during the reproductive cycle.

Other

Other measurements are those that are considered to be less directly linked to effects on populations (e.g., tumors, tissue residues, cholesterol level, and behavioral changes) and are generally not reviewed unless the author(s) provides a clear correlation with the measurement and its effect(s) on population health (e.g., behavioral effects that impact reproduction, such as number of mounts in mice) or the data set is very limited.[4]

[4] There were cases where the measurement was associated with reproduction, but the relationship of the parameter to effects on population health is not clear; therefore, these types of measurements are also coded as O. Examples include sperm motility, seminiferous tubule diameter, and testicular enzyme activities. During the development of the database, these measurements were evaluated but later excluded from consideration for TRVs. Currently, these measurements are no longer evaluated unless a clear relationship to population numbers is described.

Focus Measurement Frequency

The number of times the measurement was recorded is noted here (e.g., once per week, or 4 h/d, 5 d/wk).

Focus Measurement Duration

If the observation of the focus measurement lasted more than just an instant (e.g., behavioral observations that may take 10 min of observation), the length is noted in this field.

Focus Measurement Critical Life Stage Category

A life stage of an organism is considered to be a critical life stage if exposure to a chemical during this life stage is expected to result in a negative impact on the population health of that organism. For the purpose of deriving TRVs, a critical life stage is defined as a life stage associated with a chemical exposure that occurs during the reproductive cycle of the test organism and/or during the development of the immature test organism. For an endpoint to be considered development, it has to fall into one of two scenarios in which measurements must reflect either the development of immature organisms that were exposed via parents or the development of immature organisms directly exposed to the chemical. Reproduction and development endpoints directly reflect effects on the size and character of the next generation of the population. Note that not all endpoints associated with seemingly reproductive/development functions are coded as R/D (see Focus Measurement Category above).

Chronic – Critical Life Stage

If an endpoint reflects a critical life stage, the associated effect level may be considered to be equivalent to a chronic exposure endpoint regardless of the actual chemical exposure duration associated with this endpoint. The reasoning behind this assumption is as follows: a chronic study is preferred over a single-dose, acute, or subchronic chemical exposure study because it is more likely to capture effects that reflect critical life stages that are relevant to population success. Therefore, it is assumed that any duration of chemical exposure that is associated with a critical life stage endpoint captures potential effects on population success as a chronic study does. This effect is then considered to be equivalent to a chronic exposure effect regardless of the actual chemical administration period. Ultimately, if an endpoint is categorized as chronic because of a critical life stage, our certainty of this effect predicting the impact of a particular chemical on population success increases. Such endpoints are categorized as chronic-critical life stage (C-CL).

Critical Life Stage Only

If the critical life stage endpoint is a type that does not directly reflect effects on the size or character of the next generation of the population, certainty in predicting the impact of a particular chemical on population success is not increased. There are nonreproductive and nondevelopmental endpoints that reflect critical life stages because chemical administration occurred during the reproductive cycle of adults, during the development phase of juveniles, or during an embryo stage. Examples of such endpoints include survival for juvenile organisms (who are still undergoing development, a critical life stage), body weight measured for adult organisms in the reproductive cycle, clinical signs during reproductive cycle, or egg length. However, a measurement of these types of endpoints is not a direct-measurement of a critical life stage reproductive/development endpoint; thus, less certainty is associated with the effect level assigned to it. The actual exposure length remains (i.e., single dose remains single dose) when determining the application of UFs in the TRV derivation process. Using juvenile mortality as

an example to further illustrate the logic, it is difficult to assess the extent to which the critical life stage of development of juveniles impacts their mortality rate. Therefore, by not classifying this juvenile mortality endpoint as C-CL, the PTV that results will be lower, thus more protective, in cases where the exposure duration is acute or subchronic because of UFs that must be applied to extrapolate to a chronic effect level. Such endpoints are categorized as just critical life stage (CL).

Coding

In application, coding for critical life stage generally follows the guidelines below:

- All reproduction/development endpoints are coded as C-CL, regardless of actual chemical exposure duration.
- Other endpoints (such as adult or juvenile survival, adult weight or size change, or other characteristics [S, WC, SzC, and O, respectively]) in which chemical administration occurred during a critical life stage are coded as CL.
- Endpoints in which chemical administration did not occur during a critical life stage are coded as non-CL.
- Endpoints in which it is unknown whether or not chemical administration or measurements were taken during critical life stages are coded as NR.

Further exceptions occur where professional judgment deems the coding that would follow the guidelines to be inappropriate. Examples include the following:

- A study where chemical administration occurred for a lengthy amount of time, but measurements of the effects occurred only for part of the chemical administration period. See Example A-10a.
- A study where a critical life stage occurred, but organisms of a certain treatment group died before the critical life stage began. See Example A-10b.
- A study where a survival endpoint can be classified as chronic as a result of a critical life stage because the immature organism was directly exposed to the chemical, and chemical exposure encompassed this immature life stage. See Example A-10c.

Example A-10 Exceptions to Coding for Critical Life Stages

(a) Ivankovic and Preussman (1975, 059251, Ref ID 0010), Experiment 1: Adult rats were exposed to a chemical 90 d before mating and through reproduction for at least another 30 d, and body weight measurements took place only up until the mating period began. This endpoint would be characterized as non-CL. The body weight measurements had not taken place while the rats were subjected to additional stress of reproduction; therefore, they were not expected to be more susceptible to adverse weight change effects.

(b) Aulerich et al. (1974, 059794, Ref ID 0016): Adult mink were exposed to 5 ppm of methylmercury or 10 ppm of mercuric chloride. Authors wished to obtain information on adult body weights, kit body weights, adult mortality, reproductive measurements such as number of females mating and number of kits born alive vs. dead, and clinical signs. All organisms fed 5 ppm of methylmercury in the diet died before breeding season. Adult body weights and critical life stage codes for the mink in the 10-ppm mercuric chloride group would be WC and CL, respectively. However, for mink in the 5-ppm methylmercury group, the codes would be WC and non-CL, respectively, because the body weight measurements did not continue through reproduction as the mink died before breeding season.

(c) In Brunström et al. (1991, 070812, Ref ID 0666) and Gogal et al. (2002, 089461, Ref ID 1216), bird eggs received injections and embryo mortality was measured. This measurement would receive an endpoint coding of S and a critical life stage coding of C-CL. This scenario is also evident where germination of seeds (considered survival, from seed to seedling) was measured.

When considering the use of PTVs in TRV derivation, an endpoint associated with a C-CL category is preferred over one with a CL or non-CL life stage effect. All critical life stage designations are considered to provide support of PTV eliminations or selections for use in TRV development.

Test Period Duration and Category

The chemical administration plus any additional time before and/or after the exposure is noted here. If the test organisms were quarantined and/or acclimatized for a period of time before exposure started, or if measurements continued to be recorded after exposure ceased, this length of time is counted in the test period. Results observed after exposure ceased are not usually considered because they are not considered relevant for predicting effects of continuous chemical exposures (such as those that may be found in the environment).

Focus Measurement Dose Response

First, the table and/or page number from which the results were taken is noted. Notes on which exposure levels resulted in adverse effects for the focus measurement follow. General observations on dose-response trends are also reported. If no statistics were used, a summary of the results suffices. Basically, entry in this field provides an insight into the results observed by the researchers of the study at various exposure levels and compares them to results for controls.

Focus Measurement Statistical Test and Confidence Level

If provided, the statistical test and/or alpha level used to determine significant adverse effects for the measurement are noted here.

Focus Measurement Comments/Effect Levels

The effect level(s) are assigned (if not already provided by the authors) and documented in this field. Discussion of whether they are author-reported or reviewer-assigned effect levels and whether the assignment was based on statistics that were provided or not is also presented here as well as in Example A-11. Furthermore, any evidence of dose-response trends, post-exposure related effects, insufficient data, or other conditions that may affect the assignment of the effect levels is also discussed in detail (see Example A-11).

Example A-11 Focus Measurement Comments/Effect Levels

(a) Author-reported effect levels

(i) The authors reported effect levels for 5-day emergence: NOEC = 312 mg/kg, and LOEC = 1040 mg/kg. The EC_{10} is 307.5 mg/kg dry soil, the EC_{20} is 3112.6 mg/kg dry soil, and the EC_{50} is > 3120 mg/kg dry soil.

(ii) The researchers reported an LD_{50} of 2690 mg/kg with 95% confidence limits of 1571 to 57,063 mg/kg. The researchers did not provide a NOAEL or LOAEL, and statistics were not provided; however, sufficient mortality data were available, so the Dunnett's multiple comparison test was applied by the reviewer in order to determine statistical significance at $p = 0.05$. Based on this, statistical significance was determined at 1350 mg/kg and higher. Therefore, the 810-mg/kg level will be used in the NOAEL calculation while the 1350-mg/kg level will be used in the LOAEL calculation.

(b) Reviewer-assigned effect levels

A NOAEL can be inferred. Since no effects were observed at the highest level of 32 ppm of mercury, this is designated as the NOAEL.

No significant differences at $p < 0.05$ were found; however, the decreases in fertilization at 2 and 8 ppm were approaching significance ($0.05 < p < 0.10$), and differences between the 2- and 8-ppm and 4- and 0-ppm groups were at least 22%. Note that the 4-ppm group had a higher fertility rate than, or similar fertility rate as, the 0-ppm group. The author discusses possible reasons for the enhancement at 4 ppm, including bacteriostatic or fungicidal activity or stimulation. Based on these results and a conservative approach, the 2-ppm level is used for the LOAEL because adverse effects were seen at this lowest dose level (22% reduction in fertility) compared to control.

(c) Dose-response trends

There were no clear dose-related trends in any of the three 10-d groups, but there was a pattern of 4-ppm groups having the highest hatchability of the three exposure groups. This effect (hatchability) will not be carried further because it is difficult to determine a NOAEL and LOAEL based on three different age groups and varying responses.

(d) Post-exposure related trends

There were significantly lower body weights in the 30-, 100-, and 300-ppm groups compared to controls on day 13 of gestation. However, only the 100- and 300-ppm groups continued to have significantly lower body weights on day 21 of gestation, after exposure ceased on day 15. The possibility exists that the absence of a significant difference at the 30-ppm level was a result of the rats having had time to recover following the cessation of exposure on day 15 of gestation. Therefore, the assignment of effect levels is based on significant effects that occurred during exposure rather than effects that were present after 6 days of recovery in order to be protective. Based on this, the 30-ppm level is used for the LOAEL calculation.

Example A-11 (continued) Focus Measurement Comments/Effect Levels

(e) No reported statistics

Because it is not clear in the text or statistics which treatment level showed a significantly lower percentage of hens laying compared to controls, the treatment that shows a decrease of 20% or greater compared to controls will be considered significant (Suter et al. 1995, 089449, Ref ID 1088). Based on this, the 210-ppm wet-weight level (target concentration of 200 ppm) had 25% fewer hens laying and will be used for the LOAEL. The 15.2-ppm wet-weight level (target concentration of 20 ppm) will be used for the NOAEL.

(f) Data insufficient for TRV development

An increase in mean egg production associated with increasing mercury exposure does not appear to be an adverse effect and will not be evaluated further.

As noted, phencyclidine at the highest concentration tested (60 mg/kg) stimulated growth, as opposed to depressing it; thus, this is considered not detrimental to the organism and not suitable for deriving a TRV. This focus measurement will not be evaluated further.

Author-Reported Effect Levels

If the authors reported their own effect level(s) for the focus measurement (e.g., NOAEL for average number of live fetuses) or its category (e.g., NOAEL for reproduction), the effect level(s) and what it represents is entered into this comment field. It is then decided if each effect level accurately represents the results of the focus measurement. For example, if the authors reported a NOEC that was interpolated based on reproductive toxicity data for four plant species in a study, this NOEC, while reported in the Part 1 database, may not be considered appropriate for use as a NOEC for one species in particular. If the author-provided effect level is not considered appropriate, the reviewer must further assess the validity of the reported results for use in Part 2 (see Reviewer-Assigned Effect Levels below).

Reviewer-Assigned Effect Levels

If there is no author-reported effect level(s) or the level(s) reported is found to not be suitable for use (see Author-Reported Effect Levels above), the reviewer must assign an effect level or effect levels to the focus measurement based on the reported data using best professional judgment. Dose-response trends, post-exposure related effects, and availability of statistics are considered in whether to continue to assign effect levels or to determine that the data are insufficient for TRV development.

Dose-Response Trends

If a clear dose-response trend and an exposure concentration can be noted at which no adverse effects and/or at which adverse effects were first observed, the exposure concentration that produced no observed adverse effects is used for the NOAEL/NOEC, while the exposure concentration at which adverse effects were first observed is used for the LOAEL/LOEC. Where statistics were used by the researchers of the study, the first exposure concentration to show a statistical significance compared to controls is considered to produce an adverse effect and is used in the LOAEL/LOEC calculation. The next lower exposure concentration is then considered for the NOAEL/NOEC calculation.

Post-Exposure Related Effects

If observations continued after exposure ceased, the results for this period are not usually included in the assignment of effect levels because it is assumed the organisms of concern are continuously exposed to contaminants and thus no time for recovery is allowed. That is, the adverse effects that occur during exposure are most relevant for predicting effects of continuous chemical exposure. The assignment of a NOAEL/NOEC to a concentration at which adverse effects were observed during exposure but not afterwards may not be protective enough, so the concentration is considered a LOAEL/LOEC. However, results that occurred after exposure ceased are still noted and considered to lend support to the effect level assignment.

No Reported Statistics

If statistics were not reported by the author, the reviewer either applies his or her own statistics or, more often, considers the exposure concentration with a difference of 20% or greater effect compared to control groups to be significant. If this guideline for using a difference of 20% or greater effect is followed, Suter et al. (1995, 089449, Ref ID 1088) is cited. The guideline for using a difference of 20% or greater effect is followed by ORNL (Suter et al. 1995, 089449, Ref ID 1088) in its selection of effect levels, and it is based on EPA regulatory practices. This method for determining biological significance comes from the inference that the LOEC derived from studies in which terrestrial birds are exposed to contaminants in the diet usually corresponds to a 20% effect on individual response parameters (Suter et al. 1995, 089449, Ref ID 1088). Any difference of 20% or greater is considered a biological significance rather than a statistical significance. For purposes of assigning effect levels, biological significance is considered to be equivalent to statistical significance.

Statistics are often used when the appropriate amounts and types of data are clearly presented for each treatment group and control group in tables in the paper. Best professional judgment is used to determine which statistical test would be appropriate for the data presented.

Data Insufficient for TRV Development

If the reviewer determines that the data for the focus measurement being evaluated are insufficient for TRV derivation, it is noted that a Part 2 evaluation will not be completed for this measurement. Also, "_NoPTSEP2" is attached to the end of the experiment effect ID (e.g., 0025_CD_1A_NoPTSEP2).

Conditions in which the data are not sufficient for TRV derivation:

- Only trends are mentioned in the text by the investigators, and they do not clearly illustrate the point at which exposure level adverse effects began.
- Numerical data are available, and authors only hint at results.
- Results of the study are too varied (no clear dose-response or time-related trend), and no statistics are applied.

A-3.0 PTSE PART 2, STUDY EVALUATION AND PRIMARY TOXICITY VALUE CALCULATION

The Part 2 review process is based on evaluating and then scoring the data obtained from the reference in the Part 1 and then calculating a PTV and assigning it a confidence rating. Section A-3.1, Data Evaluation and Scoring Guidelines, provides instruction for evaluating the study and documenting the evaluation. Section A-3.2, PTV Calculation Guidelines, provides instruction for calculating the PTV and

documenting the derivation. Section A-3.2.8, PTV Confidence Rating Guidelines, provides instruction for assigning a confidence rating to each PTV.

A-3.1 Data Evaluation and Scoring Guidelines

A-3.1.1 General PTSE Information

The data in the following fields are imported from the Part 1 data-entry database:

- Reference ID
- Chemical ID
- Experiment ID
- Experiment purpose
- Effect ID
- Focus measurement label

Review Date

The date the review is started is entered here. It can be superseded by the date the record was updated (edited).

Reviewer Initials

The initials are entered or selected from a drop-down list of current reviewers. Initially, the original reviewer of the record is entered. This can be superseded by the initials of the reviewer who updated (edited) the record.

A-3.1.2 Study Design and Documentation Score

Control

Was a suitable control present? Was it a negative (no toxicant applied, but similar to treatments in all other aspects), positive (standard such as dieldrin used for comparisons of relative toxicities), or solvent control? An example of a solvent control is illustrated in an invertebrate toxicity study in which HMX was first dissolved in a solvent (acetonitrile) before application to the soil medium. The solvent control would consist of the invertebrates exposed to a soil medium containing only acetonitrile.

If a control group is not included in the experiment, but effect levels are provided by the authors, the scoring is based on whether or not the absence of the control group affects the ability of the reviewer to verify these effect levels or assign effect levels. If only an effect level of other (e.g., LC_{50}, EC_{20}) is provided by the authors, the score is not penalized because usually in these situations it is reasonably assumed that multiple concentrations were administered to extrapolate the lethal or effective concentrations. Also, a published method is often used by the authors to determine these effect levels. Therefore, it can be assumed that at least one control group was built into the study design or that control groups were not needed as long as an appropriate dose-response curve was produced to extrapolate the other effect level.

If a NOAEL/NOEC and/or LOAEL/LOEC was provided by the authors, but the absence of controls makes it difficult for the reviewer to verify the effect levels, the score will be penalized. This indicates that while the effect levels are still used, caution should be exercised in the interpretation of these values within the TRV data set because the reviewers could not ascertain that the effect levels were determined appropriately.

There are situations where control groups and effect levels are not reported, but a NOAEL/NOEC and LOAEL/LOEC, and/or NOAEL/NOEC and LOAEL/LOEC pair is assigned by the reviewer nonetheless. The score is not penalized in this scenario. This can happen for mortality endpoints where only one exposure level was administered, and it is reported that 0% mortality was observed at this concentration. This exposure concentration is used for the NOAEL/NOEC. On the other hand, if a reasonable percentage of mortality occurred (e.g., more than 50% for birds or mammals is considered adverse), this exposure concentration is used for the LOAEL/LOEC. Furthermore, two exposure concentrations in a mortality study can also lead toward the assignment of a NOAEL/NOEC and LOAEL/LOEC pair without controls if the lower concentration resulted in no mortalities while the higher concentration resulted in greater than 50% mortality.

Control group score:

1 A control group was included, or a control group was not included or reported but was not needed to verify or assign effect levels.

0 A control group was not included, and effect levels provided by the authors could not be verified.

Exposure Groups

Was more than one exposure group present? Exposure concentrations are listed. It is also noted whether these concentrations are nominal or measured.

Exposure group score:

1 More than one exposure group was used.

0 Only one exposure group was used.

Test Organism Details

The test organism name, age or life stage, sex, and origin/source are listed, if provided.

Organism Details Score

Up to four pieces of information can be provided for birds and mammals: name (common and/or scientific), age, sex, and source/origin. Up to three pieces of information are available for invertebrates and plants: name (common and/or scientific), age, and source/origin. Scoring is as follows:

4 All information is provided.

3 Three pieces of information are provided.

2 Two pieces of information are provided.

1 One piece of information is provided.

0 No information was available.

Dose Rate Parameters

In bird and mammal studies, are the exposure concentrations reported in daily dose rates of mg/kg/d, or are body weight, food ingestion rate, and/or water ingestion rate parameters available to convert the provided dose units to mg/kg/d?

For earthworm and plant studies, the entry is N/A because the concentrations are already normalized to the amount of chemical in soil (e.g., mg chemical/kg soil), which is what the PTV is based on.

Dose Rate Parameter Score

Dose rates can be calculated using two dose rate parameters: body weight and either an ingestion rate (for water or food) or an inhalation rate.

2 Both dose rate parameters were provided, the ingestion or inhalation rate was already normalized to body weight, or none of the dose rates are applicable (N/A) because the daily dose rate was reported by the authors.

1 One dose rate parameter was provided.

0 No dose rate parameters were provided.

Exposure Dose Concentration

Are the exposure concentrations nominal (target) or empirical (i.e., verified or measured) concentrations, and what is their moisture basis? If the exposure medium is not food or soil (e.g., vapors in an inhalation study, oil vehicle used in an oral gavage administration), moisture basis is N/A. If chemical administration was already provided as daily dose rates, moisture basis is canceled out and this aspect becomes N/A as well.

Dose concentration basis score:

2 Measured, dry weight or N/A.

1.75 Measured, wet (fresh) weight

1.5 Nominal, dry weight or N/A

1.25 Nominal, wet (fresh) weight

1 Measured, unknown

0.75 Nominal, unknown

0.5 Unknown, dry weight or N/A

0.25 Unknown, wet (fresh) weight

0 Unknown, unknown

Statistics

Are statistics provided, and if so, what are the test and p-value or confidence limit? If statistics were not provided, was data presented in tables in such a way that the reviewer was to apply his/her own statistics or analysis? Did the measurement show no effects that could be analyzed by statistics (e.g., zero mortality)?

Statistics score:

1 Both the statistical test and confidence level are reported.

0.5 The statistical test or the confidence level is missing, or if neither is reported, data are available for reviewer to run analysis.

0 Neither the statistical test nor confidence level are reported, and data are not adequate for reviewer to run analysis.

A-3.1.3 Test Organism Score

Taxonomic Relationship of Test Organism

The screening receptor is a species that represents a functional food group and exposure pathway (e.g., intermediate carnivore [50% flesh/50% invertebrate], burrowing mammal [inhalation]) in an area of concern. The screening receptor group (i.e., bird, mammal, invertebrate, or plant) that the test organism best represents is noted. It is followed by a description of how closely the test organism is related to the screening receptor taxonomically.

Taxonomic relationship score:

2 The test organism is related to at least one screening receptor at the order, family, genus, or species level. (Not applicable to plant or invertebrate test organisms)

1 The test organism is related to at least one screening receptor at the class level. (Not applicable to plant or invertebrate test organisms)

0 The test organism is not related to a screening receptor at the class or more specific level or is a plant or invertebrate.

Basis for Use of Test Organism

Did the investigators of the study provide a reason for using the test organism?

Test organism basis score:

1 The researchers indicated, or it can be reasonably assumed, why the particular test organism was chosen.

0 It is not known why the test organism was chosen.

A-3.1.4 Exposure Conditions Score

Test Environment

Was the study conducted in a laboratory or other controlled environment with exposure only to a single chemical?

Exposure environment score:

1 The study is based on a field or laboratory study from which a single chemical exposure can be discerned.

0 The study is not based on a field or laboratory study from which a single chemical exposure can be discerned.

Test Exposure Chemical

The chemical of potential ecological concern (e.g., cadmium), not the chemical form (e.g., cadmium chloride), is noted here. Scoring is not applicable to this field.

Test Exposure Medium (to Represent Food and Drinking Water TRVs)

For bird and mammal studies,

- the test exposure medium is noted, and
- the exposure media for TRVs and ESLs are noted as follows:
    - for food media studies, “TRVs: food; ESLs: sediment and soil,” and
    - for drinking water media studies, “TRV: drinking water; ESL: water.”

These fields are not applicable for earthworm and plant studies or mammal inhalation studies (i.e., N/A is entered).

Food equivalency score:

1 The test exposure medium is equivalent to food.

0.5 The test exposure medium is similar to food (capsule, oil, or solid bolus).

0 The test exposure medium is not equivalent or similar to food (drinking water or other).

Drinking water equivalency score:

1 The test exposure medium is equivalent to drinking water.

0.5 The test exposure medium is similar to drinking water (aqueous solution or chemical).

0 The test exposure medium is not equivalent or similar to drinking water (food or other).

Test Exposure Medium (to Represent Soil TRV)

For earthworm and plant studies,

- the test exposure medium is noted, and
- the exposure media for the TRV and ESL are noted (e.g., “TRV: soil; ESL: soil”).

This field is not applicable for bird and mammal studies (i.e., N/A is entered).

Soil equivalency score:

1 The test exposure medium is equivalent or similar to soil.

0 The test exposure medium is not equivalent or similar to soil.

Test Exposure Chemical Interactions

Even if there are chemicals in the exposure medium besides the chemical of concern, they may be naturally occurring and are not considered an interaction. Only when chemical or physical properties change during the course of the experiment are they considered an interaction. If an interaction is not reported by the author, it is noted that none is expected.

Chemical interaction score:

1 Chemicals and properties that could potentially affect the toxicological impact of the test exposure chemical on the test organism are not present in the test exposure medium.

0 Chemicals and properties are present and could potentially affect the toxicological impact of the test exposure chemical on the test organism.

Test Exposure Route

The test exposure route and whether it is similar to the exposure route of concern are described. For example, uptake via seed coat and/or roots is the exposure route of concern for plants. If in a study, plants were exposed to the chemical through spraying on the leaves, this is not considered similar to the exposure route of concern.

Exposure route score:

1 The test exposure route is equivalent to the ESL exposure route of concern (for birds and mammals, food, drinking water, or inhalation; for invertebrates, oral/dermal; and for plants, uptake).

0.5 The test exposure route is similar to the ESL exposure route of concern (for birds and mammals only, oral intubation or gavage).

0 The test exposure route is not equivalent or similar to the ESL exposure route of concern.

Test Period (Including Chemical Administration)

The test period duration, which includes any period of acclimatization before exposure and the time period for additional observations after exposure, is noted here. The percent of the test period during which chemical administration occurs is also described. For example, “The test period was 90 d, and

chemical administration occurred the entire time (100%)," or "The test period was 120 d, and chemical administration occurred during the first 90 d and composed 75% of the total test period."

Test and exposure period score (based on chemical administration period):

3 Chronic

2 Subchronic

1 Acute

0 Not reported

Exposure durations are defined in Table A-9.

Table A-9
Exposure Durations

Test	Bird or Mammal	Invertebrate or Plant
Chronic	>90 d	>6 d
Subchronic	14 to 90 d	3 to 6 d
Acute	<14 d	<3 d

Critical Life Stage

If the chemical administration occurred during the reproduction or development period of the test organism, it is noted as a critical life stage in this field.

Critical life stage score:

1 Chemical administration occurs during a critical life stage.

0 Chemical administration does not occur during a critical life stage.

Test Exposure Frequency

The frequency of exposure to which the test organisms were exposed to the test chemical is noted here (e.g., continuous or intermittent, 7 h/d, 5 d/wk). For bird and mammal oral ingestion studies, an exposure that is at least once daily or *ad libitum* is considered frequent. For mammal intermittent inhalation studies, an exposure that constitutes 70% of the chemical administration period is considered frequent (based on most studies exposing animals 5 d/wk). Earthworm and plant soil studies typically have an exposure regimen where the test organism is exposed continuously to the chemical in soil. If this is not the case, the frequency score follows the guideline for bird and mammal oral ingestion studies.

Exposure frequency score:

1 The test exposure frequency is continuous or frequent enough to represent the chemical administration period.

0 The test exposure frequency is not continuous or frequent enough to represent the chemical administration period.

A-3.1.5 Measurement(s) and Result(s)

Focus Measurement Effect Category

The focus measurement label (i.e., the measurement endpoint) as the author(s) reported it (e.g., number of pups per dam, shoot length) is noted. The endpoint category in which the focus measurement belongs is also sometimes noted for clarification (e.g., development [body weight vs. adult body weight change] or survival [juvenile mortality vs. development, juvenile mortality for those organisms exposed to the chemical via parents]).

Endpoint category score:

4 Reproduction or development

3 Survival

2 Adult weight or size change

1 Other

Measurement of Focus Measurement

If measurements took place at appropriate times during and after exposure to reflect effects and trends that can be attributed to exposure, YES is entered.

Focus measurement length score:

1 The focus measurement reflects the entire chemical administration period.

0 The focus measurement does not reflect the entire chemical administration period.

Focus Measurement Effect Level

The effect levels are noted here. If a NOAEL/NOEC and LOAEL/LOEC are both available, the magnitude of difference is calculated and reported.

Effect level score:

6 NOAEL and LOAEL, NOEL and LOEL, or NOEC, LOEC, and values are within a factor of 3.

5 NOAEL and LOAEL, NOEL and LOEL, or NOEC, LOEC, and values are within a factor of 10.

4 NOAEL and LOAEL, NOEL and LOEL, or NOEC, LOEC, and values are not within a factor of 10.

3 NOAEL, NOEL, or NOEC only

2 LOAEL, LOEL, or LOEC only

1 Other effect level (e.g., LD_{50}, LC_{50}, or EC_{50}) only

Effect Level ID

The appropriate code is selected from a drop-down list. Options are the following:

- NLOTH = NOAEL/NOEC, LOAEL/LOEC, and other effect level, such as LC_{50}
- NL = NOAEL/NOEC and LOAEL/LOEC

- N = NOAEL/NOEC
- NOTH = NOAEL/NOEC and other effect level
- L = LOAEL/LOEC
- LOTH = LOAEL/LOEC and other effect level
- OTH = Other effect level

Scoring is not applicable in this field.

A-3.1.6 PTV Calculation

Below are brief descriptions of the data entry fields for this section. See section A-3.2 for detailed instructions on how to complete these calculations.

Value, Units

The calculated or author-reported daily dose rate value (PTV) is recorded here along with its units. The units are mg/kg/d for birds and mammals and mg/kg for invertebrates and plants.

Duration

The chemical administration period is noted here. However, if the chemical administration period is acute, subchronic, or chronic, and the measurement is categorized as chronic-critical life stage, “Chronic-Critical Life Stage” replaces the chemical administration period.

Calculation

The daily dose rate and unit conversion calculations are detailed here.

Notes

Notes about where moisture content is obtained, any assumptions about daily dose rates and other calculations (e.g., moisture conversions, determining amount of individual element from compound), and/or notes about how the PTV calculations are derived (e.g., conversion of mg/m^3 to ppm are based on the ideal gas law, use of fraction of time in intermittent inhalation exposure studies) are described here.

Parameters

There is one comment and one Ref ID field for each dose rate parameter: body weight, food ingestion rate, water ingestion rate, and inhalation rate. Values, units, and an explanation of each parameter relevant to calculating the PTV (e.g., body weight and food ingestion rate for an oral via food ingestion PTV) are entered in the comment fields. If the appropriate parameters were not provided in the study, the most representative value for each parameter is located (see section A-3.2.3), a short description of what each value represents is provided, and an allometric equation, if applicable, is detailed. The source of the parameter is entered in the Ref ID field that corresponds with this parameter. Otherwise, N/A is the default in the comment field, and 0001 is the default in the Ref ID field.

A-3.2 PTV Calculation Guidelines

In deriving PTVs, the default is to use the effect levels or critical levels provided by the author(s) of the study. If provided, the information is reported in the author-reported effect levels field of the PTSE Part 1. The use of the author-reported value(s) is based upon the assumption that the authors have accounted for background concentrations of the primary exposure medium and/or concentrations in other exposure media for the chemical of concern (see section A-3.2.1). It is also assumed that the authors took care in measuring food ingestion rates and body weights for the test organisms in their study and applied the appropriate software and/or calculations to interpolate the desired effect level. If the authors did not provide effect levels in mg/kg/d for birds and mammals or mg/kg for invertebrates and plants, adjustments are made before calculating the daily dose rate, if necessary. Adjustments are not made if any of the following occur.

- Primary exposure medium concentration is empirical and in dry weight (background concentration is assumed to be included in the empirical concentration), and additional exposure from other media was not reported.
- PTV calculations are normalized for moisture content of exposure medium, and no background or other media concentrations are reported. For example, if cadmium was administered as a concentration of 30 mg Cd/kg food wet weight, and the food ingestion rate for rats was 0.03 mg food wet weight/d, the units are canceled out (normalized) when determining the amount of chemical ingested per day as follows:

$$30\,\frac{\text{mg Cd}}{\text{kg food wet weight}} * 0.03\,\frac{\text{kg food wet weight}}{\text{day}} = 0.9\,\frac{\text{mg Cd}}{\text{day}}$$

- Primary exposure medium concentration is a nominal concentration, moisture basis is unknown, and background concentration and/or additional exposure from other media was not present or reported. (The moisture basis is assumed to be dry weight in order to produce a conservative PTV. See section A-3.2.2.)
- Primary exposure medium concentration is empirical and the moisture basis is unknown. (The moisture basis is assumed to be dry weight in order to produce a conservative PTV. See section A-3.2.2.)
- Exposure concentration is provided in units of mg/kg for earthworms and plants or mg/kg/d for birds and mammals.

If the reported concentrations do not fill the above criteria, various types of adjustments may be made. They may include

- wet weight to dry weight conversions (for concentrations in the exposure medium and for food ingestion rates for birds and mammals),
- unit conversions,
- additions of verified background concentrations in the exposure medium/diet of the test animals to target (nominal) exposure concentrations,
- additions of background exposure concentrations from a medium other than the primary exposure medium to the primary exposure concentrations, or
- a combination of the above.

A-3.2.1 Background Concentration Explanation

If it was noted that background concentrations were present, but the exact concentration could not be determined from the data provided in the study without introducing more uncertainty, this is noted in the Part 2 notes field. The PTV is based upon only the concentration of the chemical added to the exposure medium, and it is still more conservative than one based on the supplemental concentration plus the concentration in the basal medium. The basis for this is that in using only the concentration added to the exposure medium, it is assumed the test organisms ingest less chemical and thus, assuming all other parameters (e.g., body weight, food ingestion rate) remain equal, the PTV is lower. If the test organisms had actually ingested a larger amount of chemical because of a background concentration in the exposure medium that was not reported, the lower PTV calculated based on only the supplemental concentration of chemical is still protective of any possible adverse effects that may result from exposure to the larger amount of chemical. Example A-12 illustrates the differences in the PTVs.

Example A-12 Background Concentration Calculations

Japanese quail were administered 5000 ppm of manganese via food. Although manganese is often present in the basal diet, the background concentration of the basal diet used in this study is not reported. A PTV is calculated based on just the supplemental concentration of 5000 ppm and a food ingestion rate of 115 g/kg body weight/d for the quail.

$$\text{PTV (mg/kg/d)} = \text{Concentration (mg/kg)} * \text{Food ingestion rate (kg/kg/d)}$$

5000 mg/kg * 0.115 kg/kg/d = 575 mg/kg/d

If it had been reported that the background concentration of manganese in the basal diet was 56 ppm, this is added to the supplemental concentration of 5000 ppm, and the calculations are carried out as above.

5056 mg/kg * 0.115 kg/kg/d = 581.44 mg/kg/d

It can be seen in Example A-12 that the PTV for the concentration added to the medium without knowing the background concentration is lower than the supplemental amount plus background concentration. If a background concentration had been assumed to be present, and a concentration was obtained from other sources, it would have provided a higher PTV. The higher PTV may not be protective enough of adverse effects that may occur at concentrations lower than the supplemental concentration plus the background concentration but higher than the supplemental concentration alone. Therefore, it is safe to use just the supplemental amount in PTV calculations if a background concentration is not reported.

A-3.2.2 Moisture Basis Explanation

If the moisture basis of the concentration in the exposure medium of the food is not reported, it is assumed to be based on dry weight. The reasoning is that if the true moisture basis is indeed wet weight, the PTV calculated based on the assumed dry weight would be lower than if the wet weight concentration of the medium had been converted to dry weight. Example A-13 shows two scenarios: in the first one, moisture basis is unknown and therefore assumed to be dry weight, and in the second, the moisture basis is known to be wet weight.

Example A-13 Moisture Basis Calculations

Scenario 1: An experiment reports administering to chicks a concentration of 30 mg/kg of hexavalent chromium via food. The moisture basis of the food is unknown and therefore assumed to be dry weight. The body weight and food ingestion rate of the chicks are 0.0874 kg and 0.0096 kg/d, respectively. The PTV is calculated as follows:

$$\text{PTV (mg/kg/d)} = \frac{30\ \text{mg/kg} * 0.0096\ \text{kg/d}}{0.0874\ \text{kg}} = 3.3\ \text{mg/kg/d}$$

Scenario 2: In the same experiment as above, it is reported that the moisture basis of the concentration is wet weight, and the moisture content of the food is 25%. The wet weight concentration must first be converted to a dry weight concentration before calculating the PTV.

$$30\frac{\text{mg Cr(VI)}}{\text{kg wet food}} * \frac{1\ \text{kg wet food}}{0.75\ \text{kg dry food}} = 40\frac{\text{mg Cr(VI)}}{\text{kg dry food}}$$

$$\text{PTV (mg/kg/d)} = \frac{40\ \text{mg/kg} * 0.0096\ \text{kg/d}}{0.0874\ \text{kg}} = 4.4\ \text{mg/kg/d}$$

Scenario 2 in Example A-13 shows that because the dry weight concentration resulting from the conversion of a wet weight concentration to dry weight is always higher, the associated PTV value will be higher as well. Therefore, assuming the concentration is based on dry weight when the moisture basis is unknown, the derived PTV is lower than and protective of the actual PTV that would have been calculated based on wet weight converted to dry weight. In this way, the estimate errs on the conservative side.

A-3.2.3 Obtaining Dose Rate Parameters for Use in PTV Calculations

Using dose rate parameters reported in the study leads to a more certain PTV than one that is based on estimated values obtained from another source; reported parameters represent direct measurements of the organisms used in the study and thus give a more accurate dose rate.

If dose rate parameters (i.e., body weight, food or water ingestion rate, and inhalation rate) were not provided in the study, they are obtained from other sources, such as

- Wildlife Exposure Factors Handbook (EPA 1993, 059384, Ref ID 0561) and
- Body Weights of 686 North American Birds (Dunning 1984, 089463, Ref ID 0086).

Often, in cases where dose rate parameters are not provided in the primary toxicity study, the body weight is obtained from another source and then the food or water ingestion rate or inhalation rate is allometrically calculated using equations from the Wildlife Exposure Factors Handbook (EPA 1993, 059384, Ref ID 0561) or Recommendations for and Documentation of Biological Values for Use in Risk Assessment (EPA 1988, 089464, Ref ID 0084). The reverse happens occasionally where the food ingestion rate is provided, and the body weight needs to be allometrically calculated. If the dose rate parameters are not in units of kg body weight, kg food/d, kg water/d, or m^3 air/d, the appropriate conversions are made before using the values in the PTV calculation. See Example A-14.

Example A-14 Unit Conversions

For example, converting $\frac{\mu g\ chemical}{mL\ water}$ to $\frac{mg\ chemical}{kg\ water}$ would be as follows:

$$\frac{\mu g\ chemical}{mL\ water} * \frac{1000\ mL\ water}{1\ L\ water} * \frac{1\ mg\ chemical}{1000\ \mu g\ chemical} * \frac{1\ L\ water}{1\ kg\ water} = \frac{mg\ chemical}{kg\ water}$$

The following hierarchy for obtaining dose rate parameters is adhered to.

1. Empirical data from the reference being reviewed.
2. Empirical data from *Wildlife Exposure Factors Handbook* (EPA 1993, 059384, Ref ID 0561) or from *Recommendations for and Documentation of Biological Values for Use in Risk Assessment* (EPA 1988, 089464, Ref ID 0084), if available.
3. Empirical data from other references.
4. Allometrically derived values from equations available in the *Wildlife Exposure Factors Handbook* (EPA 1993, 059384, Ref ID 0561) or *Recommendations for and Documentation of Biological Values for Use in Risk Assessment* (EPA 1988, 089464, Ref ID 0084).

A-3.2.4 PTV Calculation for Oral Ingestion via Food (Birds and Mammals)

If the body weight was provided or obtained from another source (and converted to kg, if required), the food ingestion rate was provided in kg food/d or similar, and exposure concentrations were provided and converted to mg chemical/kg food, the following equation is used:

$$PTVi, j = \frac{Ci * FIj}{BWj},$$

Where $PTV_{i,j}$ is the primary toxicity value (mg/kg/d) for chemical i in organism j

C_i is the concentration (mg/kg) of chemical i in food

FI_j is the food intake rate (kg food/d) for organism j

BW_j is the body weight (kg) of organism j

If a body weight was provided and converted to kilograms, and the exposure concentration was provided in terms of mg chemical/organism/d, the following equation is used:

$$PTVi, j = \frac{Cij}{BWj},$$

Where $PTV_{i,j}$ is the primary toxicity value (mg/kg/d) for chemical i in organism j

C_{ij} is the concentration (mg/organism/d) of chemical i in food for organism j

BW_j is the body weight (kg) of organism j

A-3.2.5 PTV Calculation for Oral Ingestion via Drinking Water (Birds and Mammals)

If the body weight was provided or obtained from another source (and converted to kg if required), water ingestion rate was provided in L water/d or similar, and exposure concentrations were provided and converted to mg chemical/L water, the following equation is used:

$$PTVi, j = \frac{Ci * WIj}{BWj},$$

Where $PTV_{i,j}$ is the primary toxicity value (mg/kg/d) for chemical i in organism j

C_i is the concentration (mg/L) of chemical i in water

WI_j is the water intake rate (L water/d) for organism j

BW_j is the body weight (kg) of organism j

If a body weight was provided and converted to kilograms, and the exposure concentration was provided in terms of mg/organism/d, the following equation is used:

$$PTVi, j = \frac{Cij}{BWj},$$

Where $PTV_{i,j}$ is the primary toxicity value (mg/kg/d) for chemical i in organism j

C_{ij} is the concentration (mg/organism/d) of chemical i in food for organism j

BW_j is the body weight (kg) of organism j

As explained previously, in the Dose Rate Parameters subsection of section A-2.1.3, Experiment Information, a heavier body weight leads to a more conservative PTV. Assuming the concentration and food ingestion rate remain the same, a heavier body weight leads to a lower PTV, which is more protective of possible effects produced by the exposure concentration to the organism of concern. Likewise, assuming the concentration and body weight remain the same, a lower food or water ingestion rate produces a lower PTV. Therefore, when presented with more than one option for the dose rate parameters, the value that leads to a more conservative PTV is usually chosen in order to be over-conservative rather than under-conservative.

A-3.2.6 PTV Calculation for Continuous and Intermittent Air Exposure via Inhalation (Mammals)

A continuous inhalation exposure indicates that the test organism was exposed to air containing chemical vapors for 24 h/d, 7 d/wk, for the duration of the chemical administration period. In an intermittent inhalation exposure study, the organism is exposed to air containing chemical vapors for a set amount of time each day or during a certain number of days per week. Because of the differences in the exposure frequency between continuous and intermittent exposures, and therefore the different amounts of chemical the organisms receive over similar chemical administration periods, the actual amount of time exposed to the chemical over the total length of the study must be determined for intermittent studies to determine the actual dose rate.

For both continuous and intermittent studies, the general equation used to calculate a PTV for continuous or intermittent inhalation exposure is as follows:

$$PTVi, j = \frac{Ci * IRj}{BWj} * T_f ,$$

Where $PTV_{i,j}$ is the primary toxicity value (mg/kg/d) for chemical i in organism j

C_i is the concentration (mg/m^3) of chemical i in air

IR_j is the inhalation rate (m^3/d) for organism j

BW_j is the body weight (kg) of organism j

T_f is the fraction of time organism j was exposed

Two parameters in this equation must be converted to the units necessary to derive the PTV before the PTV is calculated. The first is the concentration; it often needs to be converted from ppm to mg/m^3. The second parameter is the inhalation rate; if it is not provided in the paper, it is obtained from another source or calculated using an allometric equation, usually from EPA (1993, 059384, Ref ID 0561; 1988, 089464, Ref ID 0084), and the body weight, whether it is one reported from the study or obtained from another source. One additional parameter needs to be determined for intermittent studies: the fraction of time. In continuous studies, the fraction of time equals 1.

Converting Concentration from ppm to mg/m^3

The conversion of a concentration in ppm to mg/m^3 is conveyed by the following equation:

$$\text{Conc } (mg/m^3) = ppm(v) * \frac{MW}{24.45}$$

Where Conc (mg/m^3) is the concentration of the chemical in mg/m^3

ppm(v) is the concentration of the chemical administered in the study, by volume

MW is the molecular weight of the chemical in grams

24.45 is the constant molar volume at standard temperature and pressure

The gram molecular weight for the chemical of concern is obtained from the ChemBioFinder.Com website (http://chemfinder.cambridgesoft.com) or any other appropriate source containing chemical property information. The value in grams is then multiplied by 1000 to achieve the amount in milligrams, and this value is then used with the units of mg/m^3 in the PTV calculation along with an inhalation rate either provided in the study or obtained from another source. Often, the inhalation rate is calculated using an allometric equation from EPA (1993, 059384, Ref ID 0561) and a body weight that was provided in the study or obtained elsewhere.

Determining the Inhalation Rate

Unless already provided in the paper, the inhalation rate for a mammal is obtained from another source if the information supporting it closely matches the information for the test organism of concern (e.g., similar organism type, body weight of organism, and age/life stage of organism). Otherwise, the inhalation rate is usually derived using allometric equations from EPA (1993, 059384, Ref ID 0561, which cites Stahl 1967, 063119, Ref ID 1522), dependent on whether the body weight is presented in grams or kilograms:

$$IR = 0.002173(BW^{0.80}),$$

Where IR is the inhalation rate in m^3/d

BW is body weight in grams

OR

$$IR = 0.5458(BW^{0.80}),$$

Where IR is the inhalation rate in m^3/d

BW is body weight in kilograms

Determining the Fraction of Time for One-Phase Intermittent Inhalation Exposure Scenarios

After the concentrations are converted from units of ppm to mg/m^3, the actual exposure period is determined as a percentage of the chemical administration period and used as the fraction of time the test organisms are exposed to vapors. Often, in intermittent inhalation toxicity studies, the chemical administration regimen is presented as a rate of number of hours per day and number of days per week. To determine the fraction of time, these numbers must be converted into one total number, in days, to represent the total amount of time the test organisms were actually exposed to the chemical in air. This total number represents the actual exposure period and is divided by the chemical administration period, which should also be converted to days. The following equation is used:

$$T_f = \frac{H * D * W/24}{Pd},$$

Where T_f is the fraction of time (unitless)

H is the number of hours per day

D is the number of days per week

W is the number of weeks in the chemical administration period

Pd is the chemical administration period, in days

See Example A-15.

Example A-15 PTV Calculation for a One-Phase Intermittent Inhalation Exposure

In Goldberg et al. (1964, 089460, Ref ID 1348), rats were exposed to 300 ppm trichloroethene at a rate of 4 h/d, 5 d/wk, for 5 wk.

Step 1: Converting ppm to mg/m^3:

$$mg/m^3 = 300\ ppm * \frac{131.3824}{24.45} = 1600$$

Step 2: Determining the fraction of time:

$$T_f = \frac{(4\ h/d * 5\ d/wk * 5\ wk)/24\ h/d}{35\ d} = 0.1190\ .$$

Step 3: Determining daily inhalation rate of test organism:

The higher end of the body weight range of the rats at the beginning of the study (450 g) was used in an allometric equation for all mammals (EPA 1993, 059384, Ref ID 0561) to determine the daily inhalation rate for rats (0.29 m^3/d).

$$IR = 0.002173(Wt^{0.80}) = 0.002173(450^{0.80}) = 0.29\ m^3/d.$$

Step 4: Calculating the PTV:

$$PTV = \frac{1600\ mg/m^3 * 0.29\ m^3/d}{0.45\ kg} * 0.1190 = 122.7\ mg/kg/d$$

The PTV is rounded to 120 mg/kg/d.

Determining the Fraction of Time for Two-Phase Intermittent Exposure Scenarios

In studies where the same group of organisms is exposed to the same exposure concentration of the same chemical in two different exposure regimens (e.g., 4 h/d, 5 d/wk for the first 2 wk, and then 6 h/d, 7 d/wk in the last 5 wk), the actual exposure period for each exposure scenario is determined separately, and then the exposure periods are added together before determining the fraction of the chemical administration period they represent. See Example A-16.

Example A-16 PTV Calculation for a Two-Phase Intermittent Inhalation Exposure in which the Exposure Frequency is Different from One Phase to the Next

In York et al. (1982, 089462, Ref ID 1359), female rats were exposed to 2100 ppm 1,1,1-trichloroethane at a rate of 6 h/d, 5 d/wk during the first 2 wk (including premating and mating periods), and then for 6 h/d, 7 d/wk from day 1 to 20 of gestation.

Step 1: Converting ppm to mg/m^3:

$$\text{mg/m}^3 = 2100\ \text{ppm} * \frac{133.4033}{24.45}\ \text{g} = 11500$$

Step 2: Determining the fraction of time:

$$T_f = \frac{((6\ \text{h/d} * 5\ \text{d/wk} * 2\ \text{wk}) + (6\ \text{h/d} * 7\ \text{d/wk} * 20\ \text{d/7 d/wk}))/24\ \text{h/d}}{34\ \text{d}} = 0.2206$$

Step 3: Determining daily inhalation rate of test organism:

The average body weight range of the control rats and rats in the treatment group before exposure was 252.6 g. This body weight is used in an allometric equation to derive an inhalation rate.

$$IR = 0.002173(Wt^{0.80}) = 0.002173(252.6^{0.80}) = 0.18\ m^3/d.$$

Step 4: Calculating the PTV:

$$PTV = \frac{11500\ \text{mg/m}^3 * 0.18\ \text{m}^3/\text{d}}{0.2526\ \text{kg}} * 0.2206 = 8194.77\ \text{mg/kg/d}$$

The PTV is rounded to 8200 mg/kg/d.

In studies where the same group of organisms is exposed to two different exposure concentrations under the same exposure conditions (e.g., inhalation of 2000 ppm for the first week and then 500 ppm in the remaining 3 wk), the steps are as follows:

1. The actual exposure period, in days, for each concentration is determined separately.
2. Each concentration of the chemical is converted from ppm to mg/m^3, if needed.
3. Each concentration of the chemical in mg/m^3 is multiplied by the daily inhalation rate (obtained from reference or calculated allometrically using body weight) and the actual exposure period associated with that concentration to determine the amount of chemical received by the test organism from each exposure concentration.
4. The amounts of chemical from each exposure concentration are added to determine the total amount of chemical received by the test organism throughout the entire chemical administration period.
5. The PTV is calculated by dividing this total amount of chemical by body weight in kilograms and by the total number of days in the chemical administration period.

See Example A-17 for a two-phase intermittent study in which concentrations differ from one phase to the next.

Example A-17 PTV Calculation for a Two-Phase Intermittent Inhalation Exposure in which the Exposure Concentration is Different from One Phase to the Next

In Quast et al. (1986, 109942, Ref ID 1360), male and female rats were exposed to 35.8 ppm 1,1-dichloroethene at a rate of 6 h/d, 5 d/wk, during the first 6 wk, then to 72.6 ppm at the same rate for the remaining 66 wk of the 72-wk exposure period.

Step 1a: Determining actual exposure period (in days) for the 35.8-ppm dose regimen:

$$Pd = \frac{6\ h/d * 5\ d/wk * 6\ wk}{24\ h/d} = 7.5\ d$$

Step 1b: Determining actual exposure period (in days) for the 72.6-ppm dose regimen:

$$Pd = \frac{6\ h/d * 5\ d/wk * 66\ wk}{24\ h/d} = 82.5\ d$$

Step 2a: Converting ppm to mg/m^3 for the 35.8-ppm dose regimen:

$$mg/m^3 = 35.8\ ppm * \frac{96.9427\ g}{24.45} = 140$$

Step 2b: Converting ppm to mg/m^3 for the 72.6-ppm dose regimen:

$$mg/m^3 = 72.6\ ppm * \frac{96.9427\ g}{24.45} = 290$$

Step 3: Determining daily inhalation rate of test organism:

The average body weight range of 10 male control rats throughout 24 mo of the study was 542.2 g. This average body weight is used in an allometric equation to derive an inhalation rate.

$$IR = 0.002173(Wt^{0.80}) = 0.002173(542.2^{0.80}) = 0.33\ m^3/d.$$

Step 4a: Determining the amount of chemical received by the rats during the first 6 wk (35.8-ppm dose regimen) using the concentration in mg/m^3, daily inhalation rate, and actual exposure period.

$$140\ mg/m^3 * 0.33\ m^3/d * 7.5\ d = 346.5\ mg$$

Step 4b: Determining the amount of chemical received by the rats during the last 66 wk (72.6 ppm dose regimen) using the concentration in mg/m^3, daily inhalation rate, and actual exposure period.

Step 5: Calculating the total amount of chemical received by the rats during the entire exposure period:

346.5 mg + 7895 mg = 8242 mg

Step 6: Calculating the PTV by dividing the total amount of chemical by body weight (0.5422 kg) and by the total number of days in the chemical administration period (72 wk, or 504 d).

PTV = 8242 mg/ 0.5422 kg/504 d = 30 mg/kg/d.

A-3.2.7 Significant Digits and Rounding Procedure

The rules for significant digits in computations are generally followed in the PTV calculations. In multiplication and division, the product or quotient contains as many significant digits as the number in the

operation with the least number of significant digits. In addition and subtraction, the sum or difference is no more precise than the least precise number involved in the operation. When it comes to rounding off nonessential digits, if the last reported digit was followed by a number less than 5, the reported digit is kept as is. If it was followed by a number greater than 5, it is rounded up. Finally, if the last reported digit was followed by a 5, and that 5 is in turn followed by no other digits or zeroes, then the last reported digit is kept as is. On the other hand, if the 5 is followed by an odd number, the reported digit is rounded up one, and if the 5 is followed by an even number, the reported digit is left as is. Sometimes, significant digit rules are difficult to apply because although numbers are reported, they are often not reported in scientific format. It is difficult to tell whether a zero is significant or not in a number such as 2500. In such situations where the use of significant digits becomes vague, best professional judgment is used. The number is often rounded to a minimum of two significant digits. For example, 1247 is rounded to 1200 and 1.464 is rounded to 1.5.

In inhalation exposure studies, when the concentration in ppm is used to calculate V_analyte, all numbers resulting in the V_analyte value are then used in the conversion of ppm to mg/m^3 (e.g., 3800 ppm leads to 3.8 L, which is used in calculation of mg). Furthermore, when rounding grams to milligrams, two integers are used (e.g., 15.37 to 15 or 1.611 to 1.6) so that the mg/m^3 value then has two foremost numbers followed by zeroes (e.g., 1600 or 15000). Two decimal places are used for the inhalation rate (e.g., 0.29 m^3/d). Four decimal places are usually used in the formula weights (e.g., 131.3842 g/mol) and the fraction of time (e.g., 0.2917). The PTV is then rounded to two significant digits (e.g., 122.7 to 120).

The general guideline is to be consistent in the application of significant digit rules where possible, followed by consistent rounding procedures. After the rules for significant digits and rounding procedures are applied, the number that is entered into the PTV field is automatically rendered to scientific notation with two decimal points. This does not denote three significant digits but is rather a truncated way of reporting the values.

A-3.2.8 PTV Confidence Rating Guidelines

The abundance or lack of information provided by the study associated with a PTV is reflected in the scoring of Part 2, and these scores are then weighted according to the ability of each criterion to influence the magnitude of the TRV and the uncertainty associated with it. The following is a list of multipliers and the situations in which they are applied.

1 There is little to no influence on the TRV. Most studies have already been eliminated based on nonfulfillment of these fields (e.g., a bird study is not going to be used for a mammal study).

2 There is more influence on the TRV as to deciding whether or not to keep the PTV in the TRV data set, but little influence on the actual TRV.

3 There is a medium influence on the TRV. This weighting scheme can also be used for criteria in which TRVs are defined (e.g., oral in diet or drinking water) or it can be used for those areas where if data are not provided, other means by the reviewer can be employed (e.g., statistics).

4 There is a medium-high influence on the TRV. If the original score is low, this leads to more uncertainty. This weighting scheme is also used for those criteria defining TRVs (e.g., reproduction/development, chronic, NOAEL or NOEC).

5 There is a high influence on the TRV where a low original score leads to the most uncertainty and greatest difference in TRVs compared to those criteria derived from extra detail provided in the study (e.g., chronic vs. acute).

Table A-10 illustrates each criterion, its multiplier, and the justification for use of that multiplier.

Table A-10
Weighting Schemes for Criteria in Part 2 of the Data-Entry Database

Field that is Scored	Multiplier	Justification
Study Design and Documentation Score		
Control group included	3	While controls are needed for a stronger assessment of effect levels, unbounded NOAELs/NOECs or LOAELs/LOECs (i.e., NOAELs/NOECs without accompanying LOAELs/LOECs or vice versa) can also be derived. Therefore, the magnitude of the influence on the TRV is medium; that is, the TRV is not solely reliant on controls being available.
Multiple exposure groups	3	While multiple exposure groups are needed for a stronger assessment of effect levels, unbounded NOAELs/NOECs and LOAELs/LOECs can also be derived. Therefore, the magnitude of the influence on the TRV is medium; that is, the TRV is not solely reliant on there being more than one exposure group.
Test organism details	1	There is little influence of test organism details on the TRV. The details help to gauge the rigorousness of the study.
Dose rate parameters	4	Those parameters that are specifically related to the organism and study at hand are best suited for deriving the PTV. Parameters can also be obtained elsewhere but their use increases uncertainty, although the difference in the TRV vs. a TRV that would be derived from the use of study-specific dose rate parameters is small.
Exposure dose concentration	3	Measured concentrations in dry weight are preferred. However, if the information is not reported, nominal concentrations based on dry weight are assumed and can result in overly conservative TRVs. Also, uncertainty may be introduced if the moisture basis is in wet weight and conversion to dry weight is needed. If the moisture basis is not reported in the study, a surrogate value must be used. The TRV is not solely reliant on moisture basis; therefore, a medium degree of influence is given.
Statistics	3	Statistics provided in the study are preferred and lead to determination of dose-response trends and assignment of effect levels. However, if not provided, data may be analyzed by the reviewer. The influence on the TRV receives medium weight because of this and because if no statistics or data are provided, the assignment of an effect level is more difficult.
Test Organism Score		
Taxonomic relationship of test organism	2	Less weight is afforded for the taxonomic relationship of test organisms because studies that are not related to a screening receptor by at least the class level are not evaluated. However, more certainty results when the test organism is more closely related to screening receptor.
Basis for use of test organism	1	There is little influence of the authors' basis for the test organism on the TRV. This detail helps in consideration if the study is more attuned to the test organism itself rather than as a model for human exposure or other types of organisms.

Table A-10 (continued)

Field that is Scored	Multiplier	Justification
Exposure Conditions Score		
Test environment	1	There is little influence of the test environment on the TRV because only those studies with appropriate experimental conditions are evaluated in the PTSE. This detail helps gauge the degree of control in a study (laboratory vs. field). Uncontrolled studies are usually eliminated up front.
Test exposure medium similar to food	3	There is little influence of the test exposure medium similar to food on the value of the TRV because the exposure medium in the studies selected for oral exposures is bound to be similar or related to one of the exposure media present here. However, the test exposure medium is one of the more critical parameters evaluated in the study with respect to determining ecological relevance of the experimental conditions.
Test exposure medium similar to drinking water	3	There is little influence of the test exposure medium similar to drinking water on the value of the TRV because the exposure medium in the studies selected for oral exposures is bound to be similar or related to one of the exposure media present here. However, the test exposure medium is one of the more critical parameters evaluated in the study with respect to determining ecological relevance of the experimental conditions.
Test exposure medium similar to soil	3	There is little influence of the test exposure medium similar to soil on the value of the TRV because the exposure medium in the studies selected for oral uptake and dermal exposures or root and/or seed coat uptake is bound to be similar or related to one of the exposure media present here. However, the test exposure medium is one of the more critical parameters evaluated in the study with respect to determining ecological relevance of the experimental conditions.
Chemical interactions	2	Chemical interactions do not influence the value of the TRV much because any study that has chemical interaction is automatically eliminated from the data set before Part 1 is started. If other influences are present, they are likely to be of natural conditions.
Test exposure route	3	There is little influence of the test exposure route on the value of the TRV. However, the test exposure medium is one of the more critical parameters evaluated in the study with respect to determining ecological relevance of the experimental conditions.
Test period and chemical administration period	5	The influence of the test and chemical administration periods on the TRV is high because the assignment of chronic vs. subchronic vs. acute leads to application of UFs, which are the leading factor in TRV differences.
Critical life stage	4	The influence of the critical life stage on the TRV is high because the assignment of chronic to subchronic or acute studies leads to elimination of the use of UFs, which are the leading factor in TRV differences.
Test exposure frequency	2	The value of the TRV is influenced slightly by accounting for actual exposure time in the daily dose rate in intermittent exposure regimens.
Measurement(s) and Result(s)		
Focus measurement category	4	The focus measurement category may not influence TRVs as much because studies with “other” endpoints are eliminated before TRV consideration. However, the type of endpoint is a strong consideration with reproduction/development being the preferred endpoint, followed by survival, and then growth. High weight is given because a wider spread of the score results in clearer distinction between these endpoints.
Measurement length	1	The TRV is influenced slightly by the consideration of whether or not the measurement actually reflects the entire exposure period.

Table A-10 (continued)

Field that is Scored	Multiplier	Justification
Effect level category	5	Effect level category receives the highest weight because assignment of NOAEL/NOEC vs. LOAEL/LOEC vs. other effect level leads to the application of UFs, which are the leading factor in TRV differences.

The percent maximum score is achieved by dividing the weighted score of the study by the maximum weighted score possible for the type of study (bird or mammal oral ingestion study, mammal inhalation study, or earthworm or plant study). Bird and mammal oral ingestion studies will have a higher maximum score because the test exposure medium similar to food or drinking water category is not scored in mammal inhalation studies, whereas only the test exposure medium similar to soil is used in plant and invertebrate studies. The percent maximum score determines whether the PTV is assigned a low, medium, or high confidence according to Table A-11.

Table A-11
Percent Maximum Scores and Confidence Ratings

Confidence Rating	Percent of Maximum Total Weighted Score (%MTWS)*
High	%MTWS≥76%
Medium	51%≤%MTWS<76%
Low	26%≤%MTWS<51%
Unacceptable	%MTWS<26%

* Percent of maximum total weighted score (%MTWS) = (total score/maximum weighted score for appropriate receptor)*100.

A-4.0 PTSE PART 3, TOXICITY REFERENCE VALUE DEVELOPMENT

A PTSE Part 3 is used to develop a TRV following the completion of the PTSE Part 1 and Part 2 for all references in the data set for a particular screening receptor group (i.e., bird, invertebrate, mammal, plant), chemical, and exposure route scenario of concern. Either a GMM or CS TRV can be developed; a GMM TRV is preferred. The determination of which TRV is developed is dependent on the characteristics of the data set under consideration. Furthermore, if a GMM TRV is developed but not deemed to be appropriate for protection of ecologically relevant endpoints in the data set or of sensitive species, a subset GMM TRV can be calculated where a portion of the original GMM TRV is used to calculate a new GMM TRV. If a subset GMM TRV cannot be calculated or is still not considered protective enough, a LANL CS TRV is developed. However, the GMM TRV and subset GMM TRVs that were calculated but not used in ESL models (or were replaced with a more preferred TRV in ESL models) are still kept on record in the Ecorisk Database to allow risk assessors, risk managers, and regulators to assess for themselves the appropriateness of the values, if needed. Furthermore, keeping these unused values in the database also tracks the history of TRV development and why these values were replaced or not used. Details for the Part 3 process for GMM and CS TRVs are presented below, starting with section A-4.1.

A-4.1 Creation of the GMM TRV Data Set

A geometric mean is used instead of an arithmetic mean because it better represents the central tendency of toxicological data sets that tend to be skewed. Selecting the geometric mean as a representative effect level limits the influence of valid data points that are far removed from the general cluster of data points. The ideal GMM TRV for screening-level ecological risk assessments is one that is based on a data set representing the most ecologically relevant endpoints (i.e., reproduction/development), exposure routes (i.e., oral ingestion via food or drinking water in birds or mammals, inhalation in mammals, uptake via seed coat and/or roots in plants, or oral and dermal contact in invertebrates), exposure media (i.e., food or drinking water in birds and mammals, air for mammals, or soil for plants and invertebrates), exposure period (chronic), and effect levels (NOAEL for birds and mammals or NOEC for plants and invertebrates). A GMM TRV based on these characteristics is protective of wildlife, plant, or invertebrate populations because it represents a central tendency of the no adverse effect levels for ecologically relevant effects (i.e., adverse effects on ability of individuals to develop into viable organisms, search for mates, breed successfully, and produce live and equally viable offspring).

The data set for the GMM TRV is developed by including only ecologically relevant records for the receptor group, chemical, and exposure route scenario of concern (e.g., Aroclor-1260 in mammals for food ingestion). PTVs derived from PTSE Part 2 are included in the data set only if they are associated with exposure conditions similar to that of the exposure environment of concern. To create this data set of ecologically relevant PTVs, the PTVs must be evaluated against a set of exclusion criteria, and if they meet any of the criteria, they are excluded from the data set. The three categories of exclusion criteria are (1) exposure conditions, (2) measured endpoints, and (3) repetitive values. All are described below. After the exclusion criteria have been applied and the final GMM TRV data set has been created, there must be three or more PTVs available for a GMM TRV to be developed. If less than three PTVs exist, a CS TRV is developed instead (see section A-4.2). Before the calculation of the GMM TRV, the PTVs are extrapolated to chronic NOAEL- or NOEC-based effect levels. The GMM TRV and its data set are then graphed, and details are documented in the PTSE Part 3 data-entry database for later incorporation into the most current version of the Ecorisk Database.

A-4.1.1 Exclusion Criteria for Study Exposure Conditions

The PTVs included in the GMM TRV data set for the receptor group, chemical, and exposure route scenario of concern (e.g., Aroclor-1260 in mammals for food ingestion) are those associated with ecologically relevant studies (experiments). An ecologically relevant study is a study that uses exposure conditions and measured endpoints that are considered to be predictive of population level effects in a real world ecosystem. Table A-12 lists the exclusion criteria for exposure conditions used in a study. First, each study is evaluated against the exposure conditions exclusion criteria, and if one of the exclusion criteria is met, any PTVs associated with this study are excluded from the GMM TRV data set. If the exclusion criteria for exposure conditions are not met, then the endpoints measured in the study are evaluated against the measured endpoint exclusion criteria described in the next section.

Table A-12
Exclusion Criteria for Exposure Conditions Used in a Study

Organism Group	TRV Type	Exposure Condition	Exclusion Criteria
Bird or mammal	Food	Exposure medium	Drinking water
			Aqueous solution
			Unknown
		Exposure route	Injections
			Unknown
	Drinking water	Exposure medium	Food
			Peanut oil
			Corn oil
			Other types of oil or oil mixtures
		Exposure route	Injections
Invertebrate	Soil	Exposure medium	Manure
			Soil and manure
			Unknown
		Exposure route	Filter paper
		Soil property	OM greater than 10% or not reported
Plant	Soil	Exposure medium	Nutrient or aqueous solution
		Exposure route	Filter paper
		Soil property	OM greater than 10% or not reported

A-4.1.2 Exclusion Criteria for Endpoints Measured in a Study

For all organism groups, the endpoints excluded are those that do not fall into the reproduction/development, survival, adult weight change, or adult size change categories. Examples of these endpoints are

- tumors,
- histopathology,
- nonreproductive organ toxicity,
- biochemistry,
- hematology,
- serum chemistry, and
- nonreproductive behavior.

If one of the measured endpoint exclusion criteria is met, the PTV associated with the measured endpoint is excluded from the GMM TRV data set. If the exclusion criteria for measured endpoints are not met, then the measured endpoints for each study are evaluated against the repetitive values exclusion criteria described in the next section.

A-4.1.3 Exclusion Criteria for Repetitive Values

An exclusion procedure is performed to remove repetitive endpoints within a study, which entails making sure that there is only one PTV per ecologically relevant endpoint category (reproduction/development, survival, and adult weight or size changes) per study. Best professional judgment is used to select the most ecologically relevant and/or sensitive PTV per ecologically relevant endpoint category per study. For example, if one experiment had three reproduction/development endpoints, one survival endpoint, and one adult weight change endpoint, the most ecologically relevant and/or sensitive reproduction/development endpoint of the three available would be included in the GMM TRV data set along with the single survival and single weight change endpoints. This exclusion process minimizes the possibility of a GMM TRV being skewed to the results of any particular study as a result of repetitive values for the same endpoint category within a study. Those PTVs whose measured endpoints do not meet the repetitive values exclusion criteria are included in the GMM TRV data set.

A-4.1.4 Deriving Chronic NOAEL- or NOEC-Based Effect Levels

After the exclusion criteria have been applied, the GMM TRV data set now contains a variety of original effect levels (PTVs) derived from the PTSE process ranging from chronic NOAEL/NOEC or LOAEL/LOEC pairs to acute, other effect levels such as LC_{50}s or EC_{20}s. Effect levels other than chronic NOAELs/NOECs must first be extrapolated to chronic NOAEL- or NOEC-based effect levels before the calculation of the GMM TRV can take place. If the PTV is an acute or subchronic NOAEL/NOEC, it is extrapolated to a chronic NOAEL- or NOEC-based effect level with the application of a UF. If the PTV is a LOAEL/LOEC or other effect level (LC_{50}), it is first extrapolated to a NOAEL with the application of a UF, and then it is extrapolated to chronic exposure duration if needed. See Table A-13 for a description of UFs.

Table A-13
Uncertainty Factors Applied to Derive
Chronic NOAEL- or NOEC-Based Effect Levels

Type of Effect Level Available	UF Applied to Derive a TRV that is a Chronic NOAEL- or NOEC-Based Effect Level
C-CL or chronic NOAEL/NOEC	1
C-CL or chronic LOAEL/LOEC	10
C-CL or chronic LD_{50}/LC_{50}	100
C-CL or chronic ED_{50}/EC_{50}	100
Subchronic NOAEL/NOEC	10
Subchronic LOAEL/LOEC	100
Subchronic LD_{50}/LC_{50}	100
Subchronic ED_{50}/EC_{50}	100
Acute or single-dose NOAEL/NOEC	100
Acute or single-dose LOAEL/LOEC	100
Acute or single-dose LD_{50}/LC_{50}	100
Acute or single-dose ED_{50}/EC_{50}	100

A-4.1.5 Deriving Chronic LOAEL- or LOEC-Based Effect Levels

If a chronic LOAEL/LOEC effect level does not already exist for an endpoint from a particular study, a LOAEL- or LOEC-based effect level is approximated from an effect level (NOAEL, NOEC, LC_{xx}, LD_{xx}, EC_{xx}, or ED_{xx}). If the effect level is an acute or subchronic LOAEL/LOEC, a UF of 100 or 10 is applied to extrapolate to a chronic LOAEL/LOEC. On the other hand, if the effect level is a chronic NOAEL/NOEC or chronic NOAEL- or NOEC-based effect level extrapolated from an acute or subchronic NOAEL/NOEC, a test organism–specific LOAEL/LOEC or NOAEL/NOEC factor must be applied to derive a LOAEL- or LOEC-based effect level. Based on Dourson and Stara (1983, 073474, Ref ID 1379), 96% of the ratios between NOAELs and LOAELs for mammals in oral ingestion experiments have values of 5 or less (Dourson and Stara [1983, 073474, Ref ID 1379, p. 232 and Figure 4]). However, because these data are only applicable to oral ingestion exposure in mammals, ratios for the remaining exposure pathways (oral ingestion in birds, oral ingestion and dermal contact in earthworms, uptake via seed coats and/or roots in plants, and inhalation in mammals) were determined from NOAEL/NOEC or LOAEL/LOEC pairs specific to each of the exposure pathways. The data used to develop the ratios are from the Ecorisk Database. The smallest and largest ratios developed for each exposure pathway were used to approximate a minimum and maximum LOAEL- or LOEC-based effect level to bracket a range of concentrations at which the adverse effects may first be observed. Figure A-1 offers a step-by-step process for determining how to derive the LOAEL- or LOEC-based effect levels.

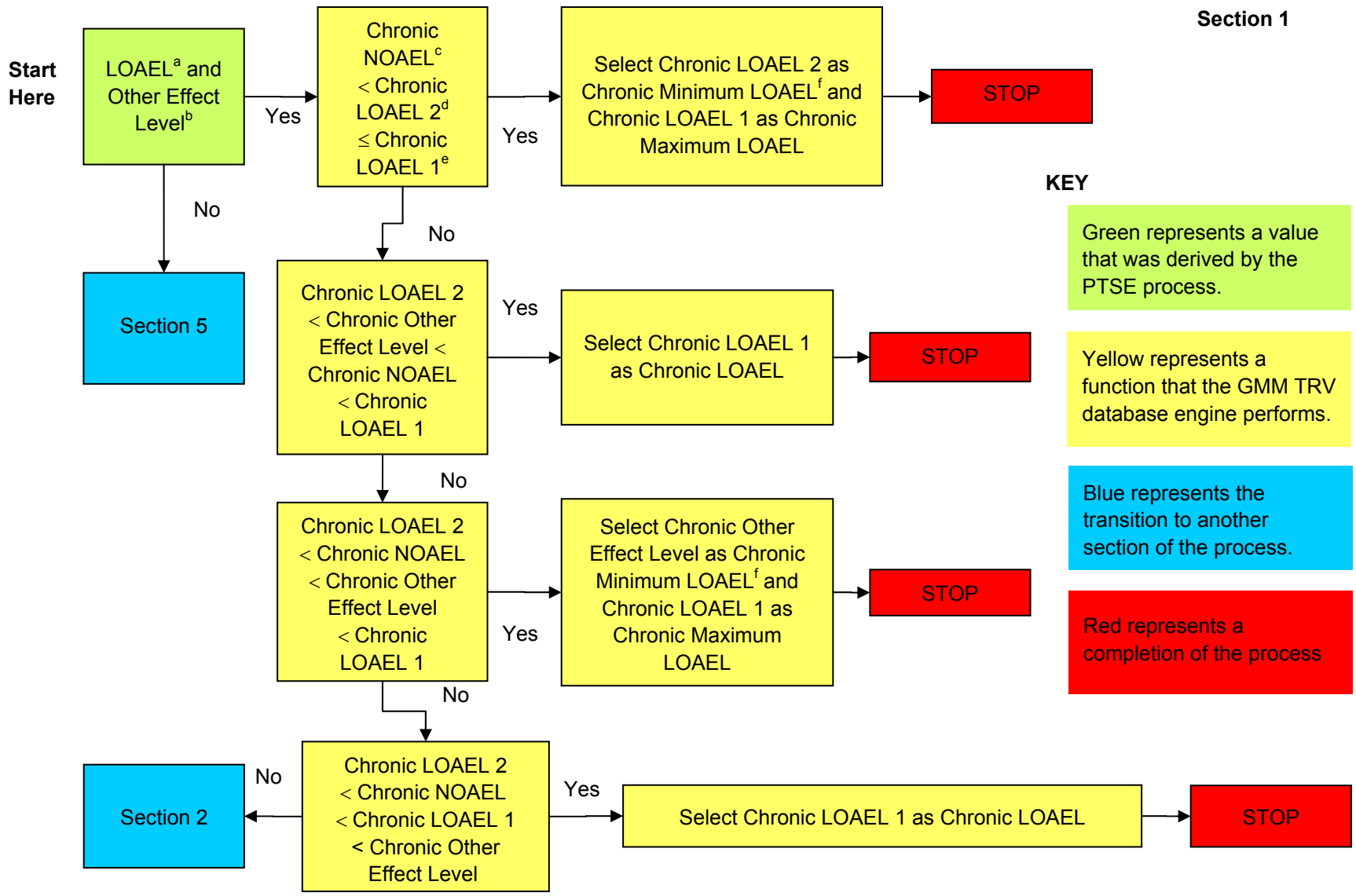

Figure A-1 Process for selecting the chronic LOAEL- or LOEC-based effect level for each endpoint in the GMM TRV data set

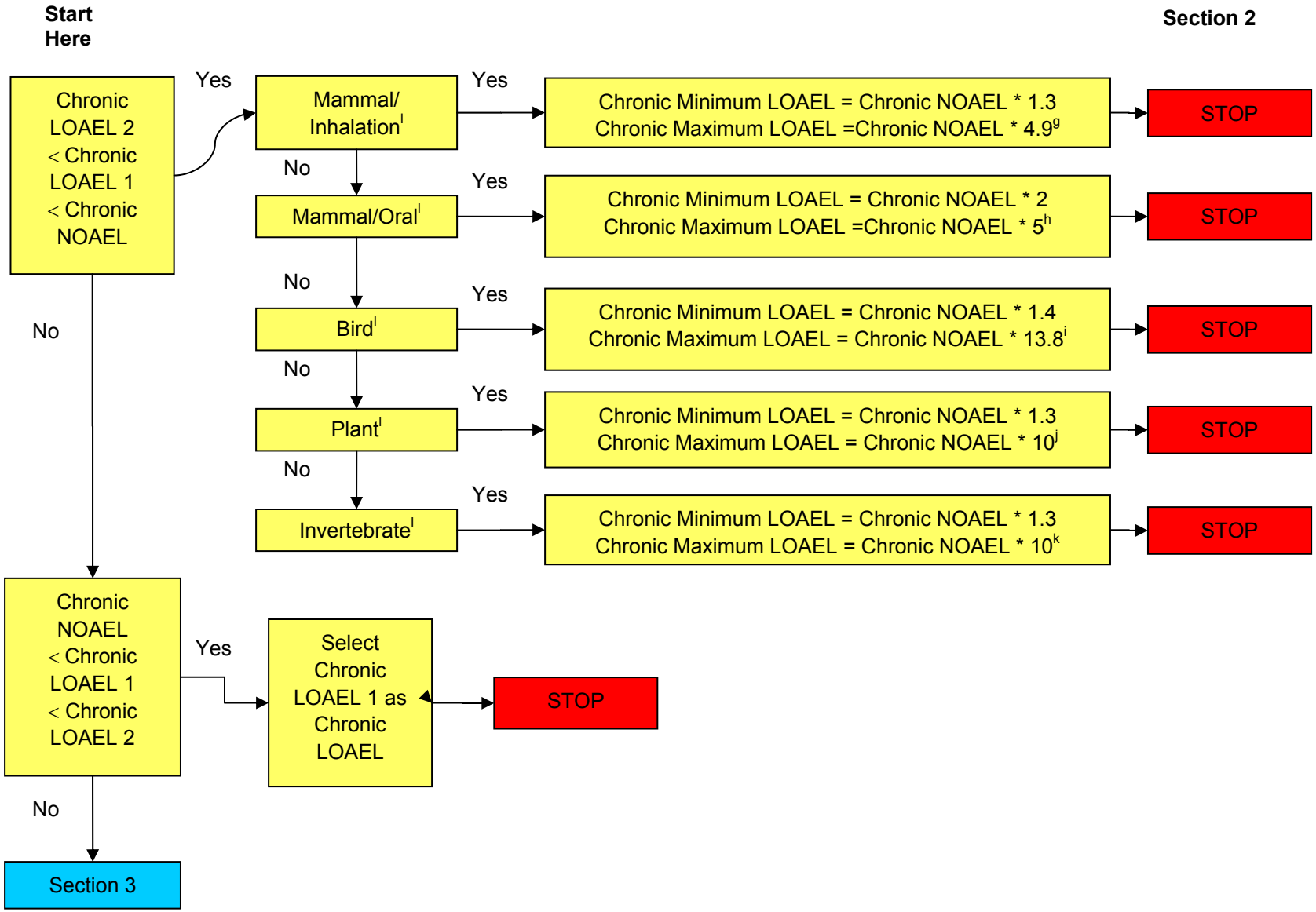

Figure A-1 (continued) Process for selecting the chronic LOAEL- or LOEC-based effect level for each endpoint in the GMM TRV data set

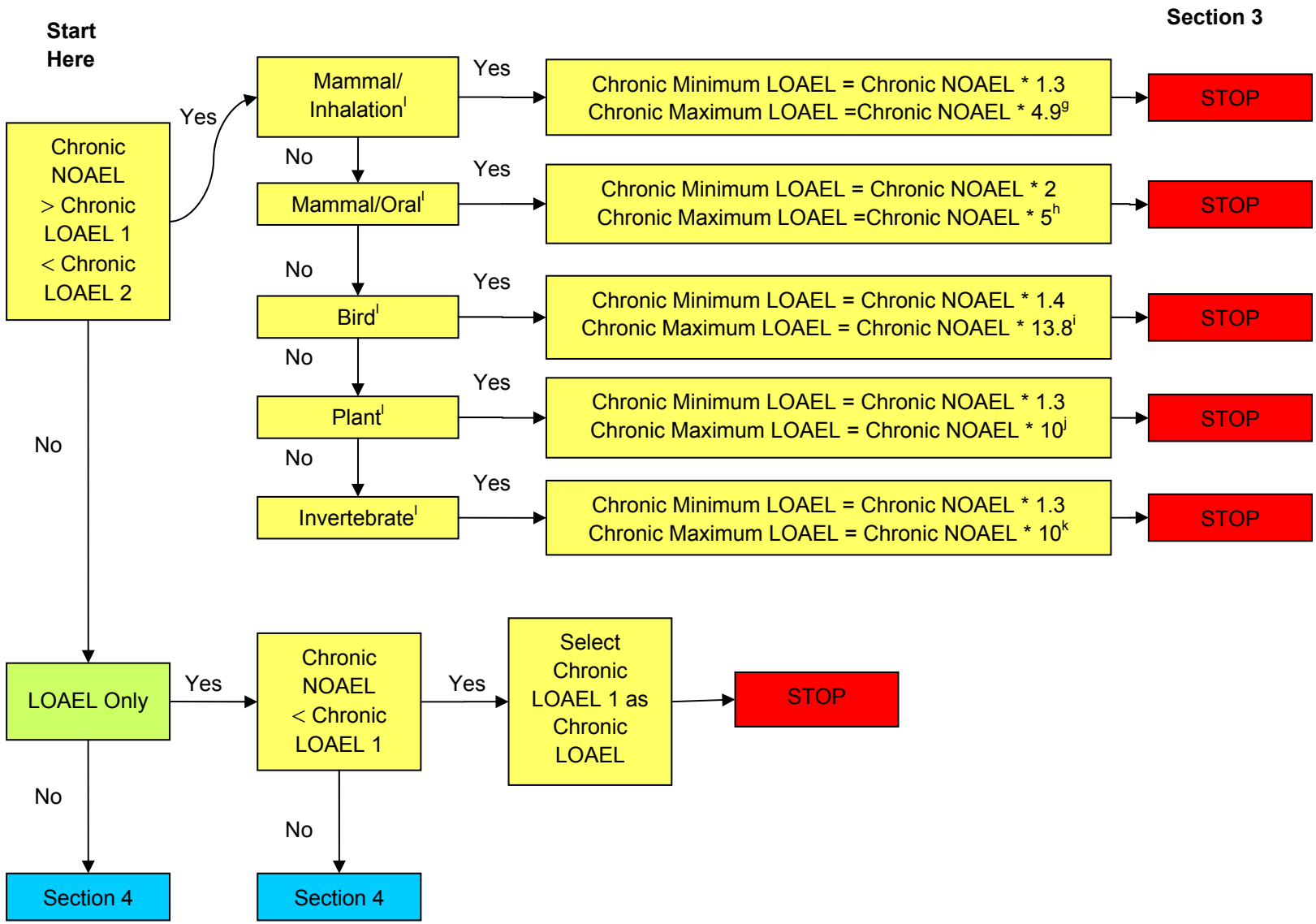

Figure A-1 (continued) Process for selecting the chronic LOAEL- or LOEC-based effect level for each endpoint in the GMM TRV data set

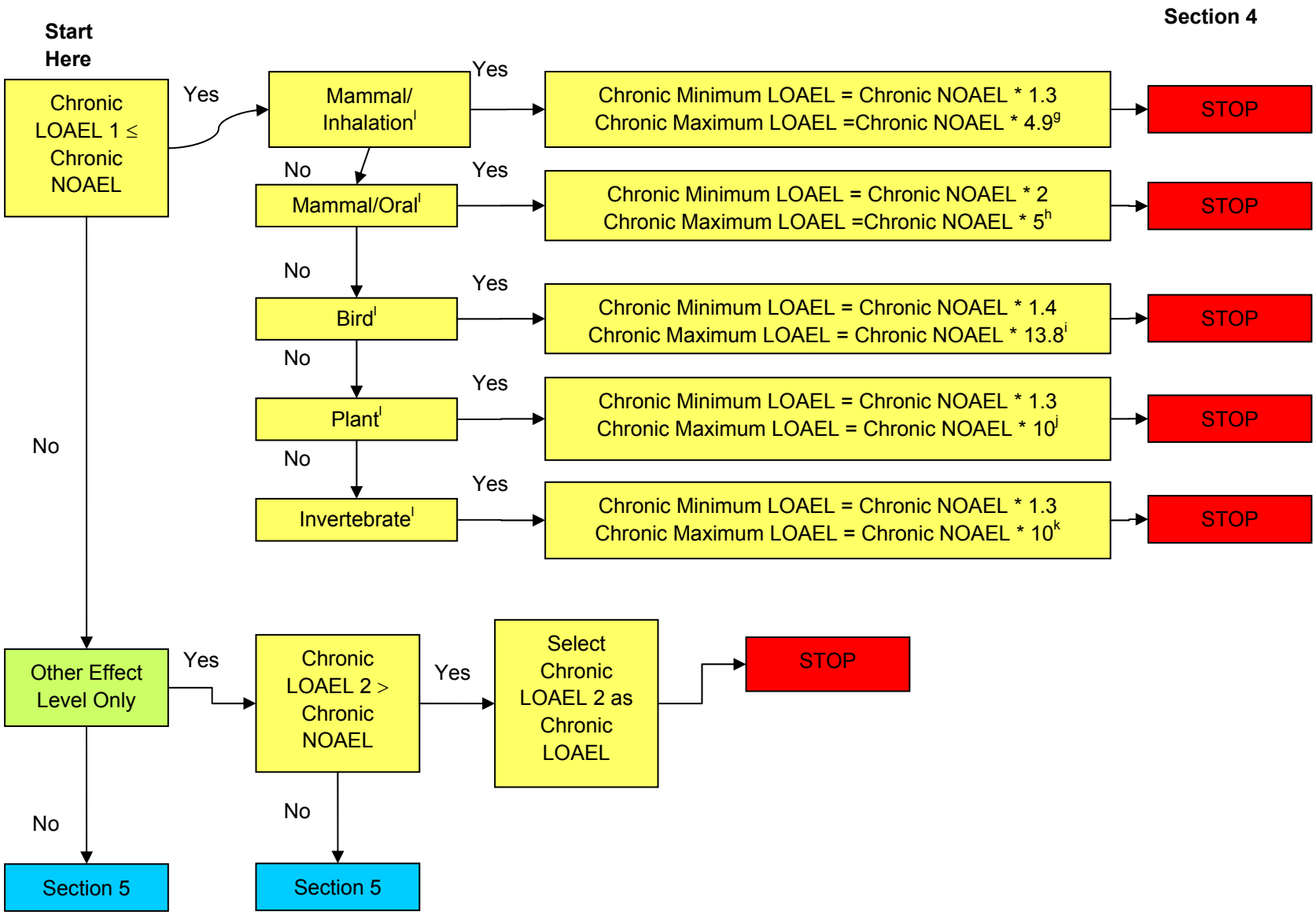

Figure A-1 (continued) Process for selecting the chronic LOAEL- or LOEC-based effect level for each endpoint in the GMM TRV data set

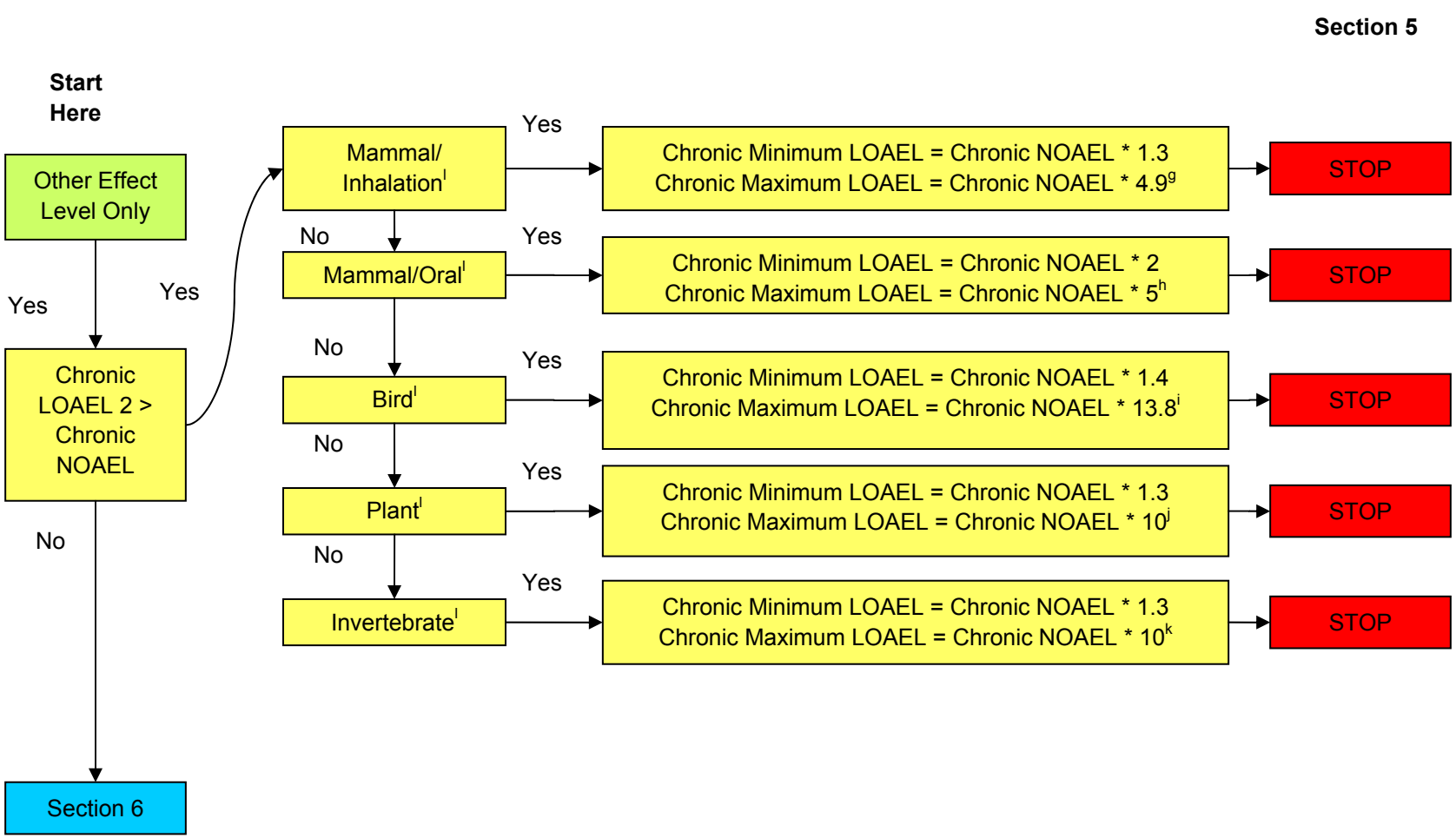

Figure A-1 (continued) Process for selecting the chronic LOAEL- or LOEC-based effect level for each endpoint in the GMM TRV data set

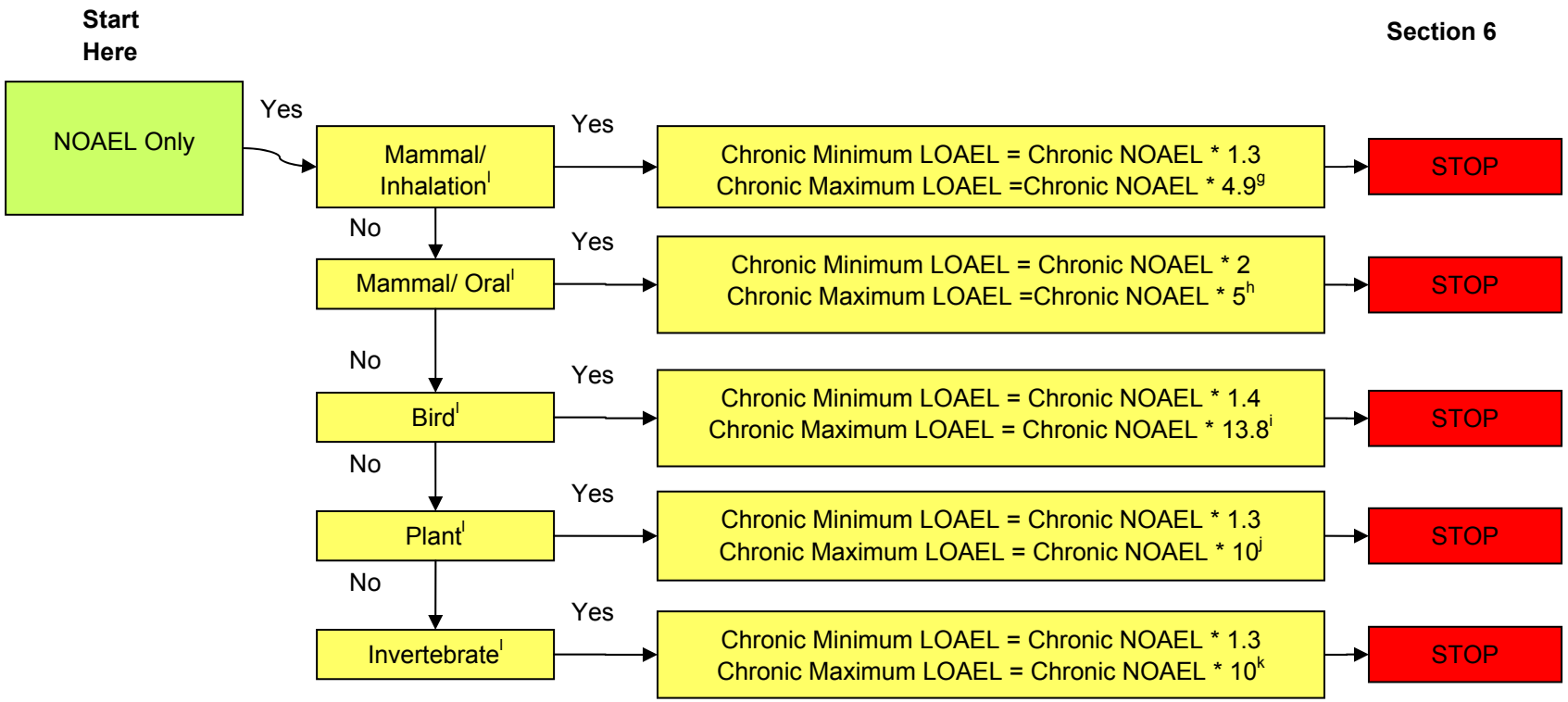

Figure A-1 (continued) Process for selecting the chronic LOAEL- or LOEC-based effect level for each endpoint in the GMM TRV data set

Notes for Figure A-1:

[a] Refers to the reported LOAEL/LOEC.

[b] Refers to the reported other effect level (e.g., LD_{50}, LC_{50}, ED_{50}, EC_{50}).

[c] Chronic NOAEL/NOEC represents either a reported chronic NOAEL, or it was derived by extrapolating from another reported effect level (e.g., LOAEL, LD_{50}) using UFs.

[d] Refers to the chronic LOAEL/LOEC estimated from a reported other effect level.

[e] Refers to the chronic LOAEL/LOEC estimated from a reported LOAEL/LOEC.

[f] Maximum and minimum chronic LOAELs/LOECs are estimated to bound the actual chronic LOAEL/LOEC when the chronic LOAEL/LOEC estimated from a reported LOAEL/LOEC is less than the chronic LOAEL/LOEC estimated from a reported other effect level.

[g] These factors are obtained from the minimum and maximum of a range of ratios determined using NOAEL and LOAEL pairs in the Ecorisk Database (LANL 2004, 087386, Ref ID 1442). These NOAEL and LOAEL pairs represent ecologically relevant data for inhalation of volatile organic compounds by terrestrial mammals.

[h] Factors are obtained from Dourson and Stara (1983, 073474, Ref ID 1379).

Notes for Figure A-1 (continued):

[i] Factors are obtained from the minimum and maximum of a range of ratios determined using NOAEL and LOAEL pairs based on ecologically relevant bird data in the Ecorisk Database (LANL 2003, 080117, Ref ID 1294).

[j] Factors are obtained from the minimum and maximum of a range of ratios determined using NOEC and LOEC pairs based on ecologically relevant plant data in the Ecorisk Database (LANL 2003, 080117, Ref ID 1294).

[k] Factors are obtained from the minimum and maximum of a range of ratios determined using NOEC and LOEC pairs based on ecologically relevant invertebrate data in the Ecorisk Database (LANL 2003, 080117, Ref ID 1294).

[l] Maximum and minimum chronic LOAELs/LOECs are estimated to bound the actual chronic LOAEL/LOEC when only a reported NOAEL/NOEC is available. First, the reported NOAEL/NOEC is used to estimate a chronic NOAEL/NOEC from which the maximum and minimum chronic LOAELs/LOECs are sometimes estimated by using extrapolation factors specific to the receptor data set being processed.

A-4.1.6 Calculation of the GMM TRV

Next, if three or more ecologically relevant chronic NOAEL- or NOEC-based effect levels are available, the GMM TRV is calculated as follows:

$$\text{GMM TRV} = \sqrt[n]{EL_1 * EL_2 * EL_3 * \ldots EL_n}$$

Where n is greater than 3 and each effect level (EL) represents a chronic NOAEL- or NOEC-based effect level for an ecologically relevant effect (i.e., reproduction, development, survival, adult weight change, or adult size change). The GMM TRV and effect levels are in units of mg/kg/d for birds and mammals and mg/kg for invertebrates and plants.

A-4.2 CS TRVs

If there are two or less ecologically relevant PTVs available in a GMM TRV data set for a chemical, receptor, and exposure medium scenario of concern, a CS TRV is developed instead. However, because there are two or less ecologically relevant PTVs available, the data set becomes limited. As a result, PTVs that were eliminated from the GMM TRV data set because of their lesser ecological relevance are added back into the CS TRV data set for consideration.

The ideal CS TRV for ecological risk screening assessments is one that is conservative in protecting the most sensitive ecologically relevant endpoint (i.e., reproduction/development), exposure route (i.e., oral ingestion via food or drinking water in birds or mammals, inhalation in mammals, uptake via seed coat and/or roots in plants, or oral and dermal contact in invertebrates), exposure medium (i.e., food or drinking water in birds and mammals, air for mammals, or soil for plants and invertebrates), exposure period (chronic), and effect level (NOAEL for birds and mammals or NOEC for plants and invertebrates). Before consideration for the TRV, each PTV is extrapolated to a chronic NOAEL- or NOEC-based effect level, if needed, using UFs (see Table A-13). Next, the information for each PTV is reviewed in detail and then the PTV that best represents the most sensitive ecological exposure scenario of concern (e.g., chronic, low-level exposure via food ingestion) is selected as the CS TRV. Typically, the most chronic, highest NOAEL/NOEC under the lowest LOAEL/LOEC for similar endpoints is selected. If there is a LOAEL/LOEC lower than the lowest NOAEL/NOEC, this effect level is usually selected and extrapolated to a chronic NOAEL- or NOEC-based effect level. Usually, if NOAELs/NOECs and/or LOAELs/LOECs are available, LC_{xx}s or LD_{xx}s, and EC_{xx}s or ED_{xx}s are eliminated early in the consideration process. The CS TRV and the data set from which it was selected are graphed and documented in detail in the PTSE Part 3 data-entry database.

A-4.3 Organization and Presentation of TRV Data Set Information

A-4.3.1 Organization of TRV Data in Tabular Format

Before data entry in the PTSE Part 3 database begins, all information is first organized and documented in Microsoft Word, Excel, and Access applications. This facilitates the gathering of information into organized formats for drafting, reviewing, and editing the TRV summary report before it is entered into numerous fields of the database. First, an output of the TRV data set in Excel is generated and exported from the Access database that runs the exclusion criteria for GMM TRV data sets, or if a GMM TRV cannot be developed, the output includes all values in the data set to be considered for the CS TRV. This output contains basic, crucial information for the PTVs considered in the data set, such as the chemical, test organism name and order, types of original effect levels, chronic NOAEL- or NOEC-based effect levels, chronic LOAEL- or LOEC-based effect levels, and UFs applied. Information from this table is used

to create two other tables for GMM TRVs: test organism orders and original effect level types. An additional worksheet in the Excel file for the GMM TRV is also created to calculate the geometric standard deviation (GSD) and any outliers (values greater than 2 GSDs from the GMM TRV) that result. The outliers are not eliminated from the data set; therefore, the GMM TRV is not recalculated (see section A-4.3.3, Table A-15 for further explanation of outliers). Finally, the NOAEL- or NOEC-based effect level and LOAEL- or LOEC-based effect level graphs are created. Only graphs for CS TRVs are created from this output.

A-4.3.2 Presentation of TRV Data in Graphs

Before the TRV summary report is drafted in Word, a graph of the GMM or CS TRV and the chronic NOAEL- or NOEC-based effect levels in its data set is created in Microsoft Excel. The GMM TRV data set is defined as all of the PTVs for a particular receptor group/chemical/exposure route scenario of concern that have passed the exclusion criteria and that have been extrapolated to chronic NOAEL- or NOEC-based effect levels. Similarly, the graph for the CS TRV data set also includes the TRV as well the chronic NOAEL- or NOEC-based effect levels in the data set. However, the graph for CS TRVs can also include other data values that were originally eliminated from the GMM TRV data set.

Regardless of the type of TRV, in larger data sets, the y-axis on the graph is sometimes set to logarithmic scale to show the numerous values clearly. Each NOAEL- or NOEC-based effect level data point on the graph has a shape that represents the PTV confidence rating (diamond, triangle, and circle for high, medium, and low confidence, respectively). Dark blue data points (diamonds, triangles, or circles) represent chronic NOAEL- or NOEC-based effect levels, while the pink data square represents the TRV. An example of a GMM TRV graph is seen in Figure A-2. Graphs presented in the Ecorisk Database will usually not show low confidence PTVs because they will have been eliminated from the data set. They are eliminated at this early stage because insufficient data preclude producing effect levels that can be used in confidently predicting toxicity.

A graph is also created, in a similar manner as the one for NOAEL- or NOEC-based effect levels, for chronic LOAEL- or LOEC-based effect levels in the TRV data set. However, confidence ratings are not highlighted in this graph, and the LOAEL- or LOEC-based effect level data points are represented by dark blue diamonds.

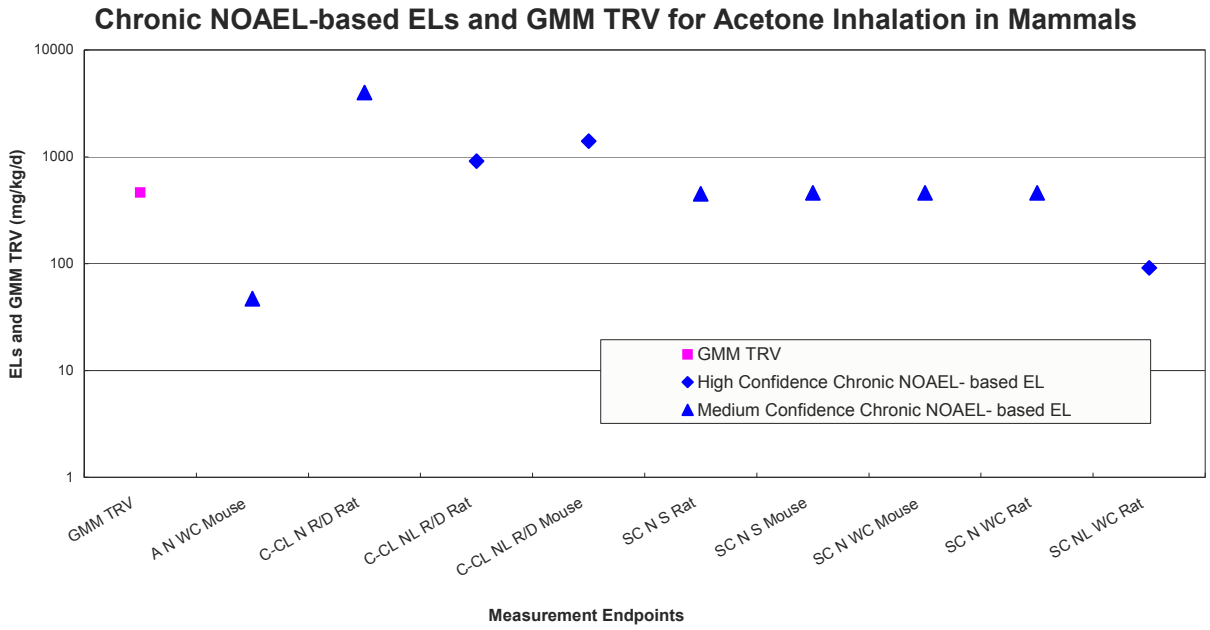

Figure A-2 Example of a graph illustrating the GMM TRV for the inhalation of acetone in mammals and its corresponding NOAEL-based effect levels

A-4.3.3 Assigning Confidence Ratings to TRVs

For GMM TRVs, a second Excel file is created for scoring criteria and confidence ratings. This type of file is not needed for CS TRVs because the confidence rating of the CS TRV is the PTV confidence rating (see section A-3.2.8) for the value upon which the CS TRV is based. The confidence ratings for GMM TRVs are based on a different set of criteria with the purpose of determining how well the GMM TRV represents the ideal GMM TRV, which represents the true TRV. The true TRV is the dose rate or concentration that is equivalent to a no adverse effect level for population level effects (i.e., decreased population size) for a particular receptor under a specific exposure scenario for a particular chemical in the real world. The confidence rating for the GMM TRV is based on how well the GMM TRV meets various criteria within specific evaluation categories. A weighted scoring system based on the degree of influence each evaluation category has on the GMM TRV is used to assess the validity of the GMM TRV for estimating the true TRV. The following sections describe the structure of the confidence rating system for GMM TRVs, including descriptions and justifications for the evaluation processes used to assign the confidence ratings.

GMM TRV Confidence Rating System Structure

The first step in assigning a confidence rating to a GMM TRV is to assign a score for each of 11 evaluation categories. Each evaluation category contains individual criteria associated with ranked scores that reflect how well the GMM TRV data set being evaluated represents the characteristics of the ideal GMM TRV. The higher the score, the better the GMM TRV represents the ideal GMM TRV and thus the true TRV.

The second step in assigning a confidence rating to a GMM TRV is to calculate a weighted score for each evaluation category by multiplying the individual scores of each evaluation category by the weighting factor of the evaluation category. The weighted score for each evaluation category is based on the

weighting factor level assigned to the evaluation category. The weighting factor level is based on the degree of influence the evaluation category has on setting the GMM TRV. The higher the weighting factor, the greater the influence the evaluation category has on setting the GMM TRV. The possible weighting factor levels are presented in Table A-14.

Table A-14
Weighting Factor Levels

Weighting Factor Level	Definition	Weighting Factor Applied
Critical	A low score for a critical evaluation category triggers reinvestigation of the GMM TRV and possible revision or decision not to use.	2
Noncritical	A high score for a noncritical evaluation category indicates the GMM TRV data set is very robust, highly relevant to the scenario for which the TRV is being developed, or is based primarily on effect levels that were not derived by applying UFs to PTVs. A low score rarely influences revision of the GMM TRV because it is an added benefit if the evaluation category scores high, but not a requirement.	1

The third step in assigning a confidence rating to a GMM TRV is to calculate a total weighted score for the GMM TRV being evaluated. The total weighted score is equal to the sum of weighted scores of all 11 evaluation categories. Table A-15 presents the scores, weighting factors, weighting factor levels, and weighted scores for each evaluation category. The justifications for the scores and weighting factor levels are presented in the Justification for Scoring Criteria and Weighting Factor Levels subsection of section A-4.3.

Table A-15
Scores, Weighting Factors, and Weighted Scores for each Evaluation Category and Criterion

Evaluation Category	Evaluation Criterion	Score	Weighting Factor	Weighted Score
Number of experiments	Equal to 10 or more	1.5	1	1.5
	Between 4 and 9	1	1	1
	Less than or equal to 3	0.5	1	0.5
Type of exposure medium	Test exposure medium matches that of concern	1	1	1
	Test exposure medium partially matches that of concern	0.5	1	0.5
Number of test organism orders	Equal to 3 or more	1.5	1	1.5
	Equal to 2	1	1	1
	Equal to 1	0.5	1	0.5
Number of unique measurements (endpoints)	More than 3	1.5	1	1.5
	Equal to 3	1	1	1
	Less than 3	0.5	1	0.5

Table A-15 (continued)

Evaluation Category	Evaluation Criterion	Score	Weighting Factor	Weighted Score
Type of endpoint category	R/D	3.5	1	3.5
	Combination of R/D and S	3	1	3
	Combination of R/D, S, and WC or SzC	2.5	1	2.5
	Combination of R/D and WC or SzC	2	1	2
	S	1.5	1	1.5
	Combination of S and WC or SzC	1	1	1
	WC or SzC	0.5	1	0.5
Number and type of effect levels of PTVs associated with the individual NOAEL- or NOEC-based effect levels in GMM TRV data set	2 or more chronic (or C-CL) NOAELs/NOECs with LOAELs/LOECs	3.5	1	3.5
	1 chronic (or C-CL) NOAELs with LOAELs	3	1	3
	1 or more chronic (or C-CL) NOAELs without LOAELs	2.5	1	2.5
	1 or more chronic (C-CL) LOAELs	2	1	2
	1 or more subchronic NOAEL with LOAEL	1.5	1	1.5
	1 or more subchronic NOAEL without LOAEL	1	1	1
	1 or more subchronic LOAEL or other effect level or acute NOAEL, LOAEL, or other effect level	0.5	1	0.5
Confidence rating of PTVs associated with the individual NOAEL- or NOEC-based effect levels in GMM TRV data set	100% of the effect levels have high confidence ratings	2	1	2
	Effect levels have a mixture of high and medium confidence ratings	1.5	1	1.5
	100% of the effect levels have medium confidence ratings	1	1	1
	Effect levels have a mixture of high, medium, and low confidence ratings	0.5	1	0.5
Outlier(s) in chronic NOAEL- or NOEC-based effect level distribution	100% of data are within a GSD less than or equal to 2	4	2	8
	75%–99% of data are within a GSD less than or equal to 2	3	2	6
	75% or more of data are within a GSD of 6	2	2	4
	75% or more of data are within a GSD of 10	1	2	2
	None of the above	0	2	0
Chronic NOAEL- or NOEC-based effect level distribution is bimodal*	No	2	2	4
	N/A - Evaluation is not possible because data set is too limited	1	2	2
	Yes	0	2	0

Table A-15 (continued)

Evaluation Category	Evaluation Criterion	Score	Weighting Factor	Weighted Score
Relationship of GMM TRV to chronic LOAEL- or LOEC-based effect levels	The GMM TRV is less than the lowest LOAEL- or LOEC-based effect level	3	2	6
	The GMM TRV is higher than the lowest chronic LOAEL- or LOEC-based effect level by a factor of 3 or less and is protective of the majority of R/D endpoints. Furthermore, the lowest chronic LOAEL- or LOEC-based effect level represents a chronic or C-CL LOAEL or other effect level for an R/D endpoint.	2	2	4
	The GMM TRV is higher than the lowest chronic LOAEL- or LOEC-based effect level by a factor of 3 or less, and the lowest chronic LOAEL- or LOEC-based effect level represents a chronic LOAEL or other effect level for an S, WC, or SzC endpoint.	1.5	2	3
	The GMM TRV is higher than the lowest chronic LOAEL- or LOEC-based effect level by a factor of 3 or less, and the lowest chronic LOAEL-based effect level is extrapolated from a subchronic or acute LOAEL or other effect level (e.g., EC_{20}, LD_{50}) for an R/D, S, WC, or SzC endpoint.	1	2	2
	The GMM TRV is higher than the lowest chronic LOAEL- or LOEC-based effect level by a factor of 3 or less, and the lowest LOAEL-based effect level is derived from a subchronic or acute NOAEL for an R/D, S, WC, or SzC endpoint.	0.5	2	1
	None of the above	0	2	0
Relationship of GMM TRV to other published TRVs	Acceptable	2	2	4
	No comparison available	1.5	2	3
	Not acceptable	0	2	0

*Bimodality can only be evaluated for data sets with 10 or more chronic NOAEL- or NOEC-based effect levels.

The fourth step in assigning a confidence rating to a GMM TRV is to determine the percentage the total weighted score is of the maximum total weighted score for the evaluation (i.e., 36.5 points based on summing the highest scores from each evaluation category). The total weighted score percentage of the maximum total weighted score is the ultimate basis for assigning the confidence rating of a GMM TRV. Table A-16 presents the confidence ratings and the corresponding percentage of the maximum total weighted score and the equivalent total weighted score.

Table A-16
Confidence Ratings for GMM TRVs

Confidence Rating	Percent of Maximum Total Weighted Score (%MTWS)	Equivalent Total Weighted Score (ETWS)
High	%MWTS ≥ 75%	27.375 ≤ ETWS ≤ 36.5
Medium	50% ≤ %MTWS < 75%	18.25 ≤ ETWS < 27.375
Low	25% < %MTWS < 50%	9.125 < ETWS < 18.25
Unacceptable	%MTWS ≤ 25%	ETWS ≤ 9.125

Justification for Scoring Criteria and Weighting Factor Levels

Table A-17 provides the justification for the scoring criteria and weighting factor levels of each evaluation category.

Table A-17
Justifications for Scoring Criteria and Weighting Factor Levels for Each Evaluation Category

Evaluation Category	
Justification for Scoring Criteria	**Justification for Weighting Factor Level**
Number of Experiments	
The preference is to have a high number of experiments because this reduces the potential for the data set to be biased toward a particular study design. Based on best professional judgment, having 10 experiments is considered to provide a more than adequate representation of the toxicity of a chemical for the test organism group of concern. Having 4 to 9 experiments is considered to provide an adequate representation, while having 3 or fewer experiments is considered to provide a minimal representation of the toxicity of a chemical for the test organism group of concern.	This category is given a noncritical weighting factor level. This evaluation category has a strong relationship to the robustness of the data set and its ability to represent the ideal GMM TRV; thus, the true TRV is estimated. The higher the number of experiments, the more robust the data set. This evaluation category is not, however, a primary factor for determining whether or not the GMM TRV should be used because a high number of experiments in the data set is not a requirement, but rather an additional benefit for assessing confidence in the TRV.
Type of Exposure Medium	
The preference is for all the effect levels in the data set to be associated with an exposure medium that is equivalent to the exposure medium of concern. However, if the data set is limited (i.e., less than four effect levels for a particular exposure medium), effect levels that have an appropriate surrogate exposure medium (i.e., exposure medium that has the same exposure route as the exposure route of concern) may be used to supplement the data set so that a GMM TRV can be derived. For example, for an oral ingestion via food TRV, only food effect levels should be used, but if the data set is limited, oral ingestion via drinking water effect levels may be used to supplement the data set so that a GMM TRV may be calculated.	This category is given a noncritical weighting factor level. This evaluation category indicates the degree of relevance the data set has to the TRV that is being developed. The higher the degree of relevance, the more closely the GMM TRV represents the ideal GMM TRV; thus, the true TRV is estimated. This evaluation category is not, however, a primary factor for determining whether or not the GMM TRV should be used because an exact match of the exposure medium for which the TRV is being developed is not a requirement, but rather an additional benefit for assessing confidence in the TRV. Only the exposure route must match the exposure for which the TRV is being developed. However, the toxicity can vary greatly in different exposure media as a result of the differences in bioavailability of the chemical in one compared to the other. Therefore, a complete match of the exposure medium is preferred to more accurately estimate the true TRV.

Table A-17 (continued)

Evaluation Category	
Justification for Scoring Criteria	**Justification for Weighting Factor Level**
Number of Test Organism Orders	
The preference is to have a high number of test organism orders because this reduces the potential for the data set to be biased toward one order of test organisms. The scoring criteria are based upon the USACHPPM guidance that states that having at least two different taxonomic orders in a TRV data set helps define the quality of the data set (Ryti et al. 2004, 076074, Ref ID 1481).	This category is given a noncritical weighting factor level. This evaluation category has a strong relationship to the robustness of the data set and its ability to represent the ideal GMM TRV; thus, the true TRV is estimated. The higher the number of test organism orders, the more robust the data set. This evaluation category is not, however, a primary factor for determining whether or not the GMM TRV should be used because a high number of test organism orders in the data set is not a requirement, but rather an additional benefit for assessing confidence in the TRV.
Number of Unique Measurements (Endpoints)	
The preference is to have a high number of unique measurements (endpoints) because this helps ensure the robustness of the GMM TRV by including multiple toxicological effects. Unique measurements are those that represent different parameters of measurement for an endpoint category. For example, the endpoints of "mortality" and "LC_{50}" may both be categorized as S endpoints because they are both measurements of survival/mortality, but they are each considered a unique measurement because they measure different aspects of survival/mortality. Based on best professional judgment, having more than three unique measurements is considered to provide a more than adequate representation of the toxicity of a chemical for the test organism group of concern. Having three unique measurements is considered to provide an adequate representation while having fewer than three unique measurements is considered to provide a minimal representation of the toxicity of a chemical for the test organism group of concern.	This category is given a noncritical weighting factor level. This evaluation category is related to the robustness of the data set and its ability to represent the ideal GMM TRV; thus, the true TRV is estimated. The higher the number of unique measurements, the more robust the data set. This evaluation category is not, however, a primary factor for determining whether or not the GMM TRV should be used because a high number of unique measurements in the data set is not a requirement, but rather an additional benefit for assessing the validity of the GMM to estimate the true TRV. Furthermore, all the unique measurements that are allowed in the data set are, by definition, relevant to the TRV being developed for population effects. The relevance of the endpoint category of each unique measurement is scored separately under the Type of Endpoint Category evaluation category below.
Type of Endpoint Category	
The preference is to have more reproduction and development endpoints followed by survival endpoints and then by adult body weight or size change endpoints because the first category of endpoints is the most ecologically relevant group for determining long-term effects on populations, followed by the second and third categories.	This category is given a noncritical weighting factor level. This evaluation category indicates the degree of relevance the data set has to the effects of concern, population level effects, for which the GMM TRV is being developed. The higher the degree of relevance, the more closely the GMM TRV represents the ideal GMM TRV; thus, the true TRV is estimated. This evaluation category is not, however, a primary factor for determining whether or not the GMM TRV should be used because all the endpoint categories considered are ecologically relevant by definition. However, reproduction or development endpoints can more closely approximate population level effects, so having more endpoints in this category is an added benefit for assessing the validity of the GMM TRV for estimating the true TRV.

Number and Type of Effect Levels of PTVs Associated with the Individual NOAEL- or NOEC-Based Effect Levels in the GMM TRV Data Set	
The preference is to have chronic NOAELs/NOECs with LOAELs/LOECs, followed by chronic NOAELs/NOECs without LOAELs/LOECs, then by subchronic NOAELs/NOECs with LOAELs/LOECs, then by subchronic NOAELs/NOECs without LOAELs/LOECs and finally by all other effect levels. This hierarchy is based on two factors. One factor is whether or not UFs have to be applied to a PTV to extrapolate to a chronic NOAEL/NOEC. Extrapolated values are less preferred because they may be overly conservative and thus less representative of the actual chronic NOAEL/NOEC. The second factor is whether or not there are any NOAELs/NOECs with accompanying LOAELs/LOECs. NOAELs/NOECs with LOAELs/LOECs are most preferred because these values bracket the range of possible effects better than just a NOAEL/NOEC or just a LOAEL/LOEC alone.	This category is given a noncritical weighting factor level. This evaluation category is directly related to the certainty in the GMM TRV. The more effect levels in the GMM TRV data set that were extrapolated to chronic NOAEL- or NOEC-based effect levels by applying UFs, the greater the level of conservatism that is built into the GMM TRV. Even though being overly conservative is acceptable for screening-level ecological risk assessments, it is preferred that TRVs not be overly conservative if more certain data are available. On the other hand, the higher the number of original effect levels that are chronic NOAELs/NOECs in the GMM TRV data set, the higher the confidence that the GMM TRV represents the ideal GMM TRV and thus estimates the true TRV (chronic NOAEL). A high score in this evaluation category is not required, but is an additional benefit for assessing confidence in the TRV.
Confidence Rating of PTVs Associated with the Individual NOAEL- or NOEC-Based Effect Levels in GMM TRV Data Set	
The preference is to have more effect levels (PTVs) with high confidence ratings, followed by those with medium ratings and then by those with low ratings. A PTV confidence rating indicates to what degree the PTV is ecologically relevant, defensible, and well documented based on the PTSE Part 2 study evaluation criteria. Effect levels associated with a low confidence rating are not included in the data set unless the data set is limited (i.e., less than three effect levels based on PTVs with either a high or medium confidence rating.).	This category is given a noncritical weighting factor level. This evaluation category indicates the degree of relevance the data set has to the TRV that is being developed. The higher the degree of relevance, the more closely the GMM TRV represents the ideal GMM TRV; thus, the true TRV is estimated. The PTV confidence rating is based upon scoring various study elements that are considered to be relevant for developing a scientifically defensible and ecologically relevant TRV. A high PTV confidence rating indicates the value is highly relevant for deriving a TRV and more likely to accurately estimate the true TRV.
Outliers(s) in the Chronic NOAEL- or NOEC-Based Effect Level Distribution	
The data set cannot have invalid outliers (i.e., values associated with error or study designs that do not meet the minimum requirements for deriving a TRV). Invalid outliers must be removed from the data set before calculation of the GMM TRV. An invalid outlier is determined by a low confidence rating of a PTV associated with an effect level in the data set. However, valid outliers, or extreme values, are allowed (e.g., sensitive species) as long as the data set is not bimodal (see the Chronic NOAEL- or NOEC-based Effect Level Distribution is Bimodal evaluation category below). The GSD is used to determine the variance of the GMM TRV. A lower variance (smaller GSD) indicates that the GMM TRV is more likely to represent the ideal GMM TRV and thus more accurately estimate the true TRV while a high variance (higher GSD) indicates that the GMM TRV is less likely to represent the ideal GMM TRV and thus less accurately estimate the true TRV. In most cases of high variance, the GMM TRV may be overly conservative because the large variance in the values is a result of the averaging of effect levels that are based on PTVs other than chronic NOAELs/NOECs and the application of UFs to extrapolate these values to chronic NOAEL- or NOEC-based effect levels. A data set that contains both the smaller, extrapolated values and the nonextrapolated values (i.e., original effect levels that were already chronic NOAELs/NOECs) leads to a high variance.	This category is given a critical weighting factor level. This evaluation category represents the variance of the GMM TRV dataset, which is important because it indicates how well the GMM TRV represents the ideal GMM TRV. Thus, this evaluation category indicates how well the GMM TRV estimates the true TRV, which is directly related to the confidence in the GMM TRV. Low variance equals high confidence. High variance equals low confidence and may require reconsideration of the GMM TRV.

Chronic NOAEL- or NOEC-Based Effect Level Distribution is Bimodal	
The preference is for the GMM TRV data set to not have a bimodal distribution. A bimodal distribution is determined based on two distinct clusters of values associated with different test species, original exposure durations, original effect levels, or endpoint categories of each effect level in the data set. If a data set is bimodal, best professional judgment must be used to determine if a subset GMM TRV(s) (i.e., a TRV calculated from a data set smaller than the original) needs to be calculated or if the GMM TRV can be used as is.	This category is given a critical weighting factor level. This evaluation category has a high influence on whether or not the GMM TRV will be used. If the GMM TRV data set is found to have a bimodal distribution, the GMM TRV may need to be revised to represent the most sensitive and/or ecologically relevant distribution (e.g., one distinct cluster is rodent [omnivore] data while the other is mink [carnivore] data. A TRV calculated from rodent data is more appropriate for the omnivorous deer mouse ESL receptors, while a TRV calculated from the mink is more appropriate for carnivorous red fox ESL receptor.)
Relationship of GMM TRV to Chronic LOAEL- LOEC-Based Effect Levels	
The preference is to have the GMM TRV below the lowest chronic LOAEL- or LOEC-based effect level because that indicates it is protective of the most sensitive adverse effect in the data set. If the GMM TRV is not below the lowest chronic LOAEL- or LOEC-based effect level, the next preference is for it to be no more than 3 times higher than a chronic LOAEL- or LOEC-based effect level based on a chronic or C-CL LOAEL/LOEC for an R/D or less ecologically relevant endpoint. The next preference is to have the GMM TRV at no more than 3 times higher than a chronic LOAEL- or LOEC-based effect level extrapolated from an original effect level other than a LOAEL. Because some of the chronic LOAEL- LOEC-based effect levels are extrapolated from NOAELs/NOECs or other effect levels by applying UFs, they may be overly conservative and not represent the true chronic LOAELs/LOECs for particular endpoints. In such cases, the GMM TRV is considered adequately protective as a result of the conservatism built into the extrapolated chronic LOAEL- or LOEC-based effect levels. Furthermore, the GMM TRV may be considered adequately protective if it is below the chronic LOAEL- or LOEC-based effect levels for the most ecologically relevant endpoints (reproduction and development) even though it may exceed the lowest chronic LOAEL- or LOEC-based effect level for an adult body weight or size change endpoint or for a survival endpoint. Another consideration is to determine, based on best professional judgment, whether or not the GMM TRV is unacceptably higher or lower than the lowest chronic LOAEL- or LOEC-based effect level. If the difference is unacceptable, further investigation is warranted to determine if the GMM TRV is inappropriate (i.e., unacceptably over- or under-conservative). If it is found to be unacceptable, then the GMM TRV may need to be revised.	This category is given a critical weighting factor level. This evaluation category has a high influence on whether or not the GMM TRV will be used. If the difference between the GMM TRV and the lowest chronic LOAEL- or LOEC-based effect level is unacceptable, the GMM TRV is unacceptable and an alternative (e.g., a subset GMM TRV, CS TRV) needs to be considered.
Relationship of GMM TRV to other Published TRVs	
The preference is that any differences between the GMM TRV and other published TRVs be explained based on the experiments, endpoints, test organisms, and test chemical forms, etc., considered. It is also important that the explanation provide support for or against the use of the GMM TRV. It should be verified that the GMM TRV has considered all relevant data. If relevant data have not been considered, the GMM TRV data set may need to be expanded to include the missing data. If no published TRVs are available for comparison, the GMM TRV is considered to be acceptable.	This category is given a critical weighting factor level. This evaluation category has a high influence on whether or not the GMM TRV will be used. If differences between the GMM TRV and other published TRVs are unacceptable (i.e., unexplainable, error based, or lack of data based), the GMM TRV is unacceptable and an alternative (e.g., subset GMM TRV, CS TRV) needs to be considered.

A-4.3.4 Drafting the TRV Summary Report and PTSE Part 3 Data Entry

The information organized in the Excel file(s) and presented in the graphs is used as reference and supporting documentation for the TRV summary report as it is drafted in a Microsoft Word format that contains the fields in the PTSE Part 3 data-entry database. The report is created in Word for ease of drafting, peer reviewing, and revising. The final report is then entered into the PTSE Part 3 data-entry database by copying and pasting sections one at a time into Access data fields. The graphs are copied and pasted into fields as well. However, the information in the test organism orders and original effect levels tables and the GSDs worksheet is not entered because these data are automatically generated and presented by the Ecorisk Database. Rather, this information has been created in Excel for reference while working on the TRV summary report.

The PTSE Part 3 data-entry fields are detailed below, and Attachments A-1 and A-2 contain examples of user-printable TRV summary reports for GMM and CS TRVs, respectively. Note that some fields such as reviewer initials and date are not included in the printable reports because they are for quality assurance documentation purposes only.

Reviewer Initials

The initials of the person entering the information in the PTSE Part 3 record are entered here. If significant changes are made to a record at a later time, the initials of the new reviewer replace the original reviewer initials.

Date

The date the PTSE Part 3 record is created or modified is entered here.

Last Updated

If any changes are made to the TRV in the record, the version date of the Ecorisk Database that these changes will appear in is entered in the last updated field.

Part 3 TRV Summary ID

A unique ID for the record is entered in this field (see Example A-18). The format, in one continuous string with each parameter separated by an underscore symbol, is as follows:

Analyte Code_ESL Medium_ESL Screening Receptor Group ID_Test Organism Group ID_Test Organism Common Name_Test Exposure Medium_TRV Type_TRV Ref ID_Primary Toxicity Study Ref ID

Example A-18 Part 3 TRV Summary IDs

107-06-2_AIR_M_TM_Mammal_Air_ChronicGMMNOAEL_1442_0001

HGI_SEDIMENT_B_TB_QuailJapanese_Diet_ChronicCSNOAEL_1230_0017

GMM TRV Record ID

The ID for GMM TRVs provides the following information in a continuous string with no spaces or underscores: Analyte Code, Test Organism Type, the acronym GMM, and Test Exposure Medium. This field is left blank for CS TRV records. See Example A-19.

Example A-19 GMM TRV Record IDs

107-06-2MGMMA

11096-82-5MGMMF

Graph Group ID

This field helps to identify all graphs belonging to a particular TRV and its data set. The format, in one continuous string with each parameter separated by an underscore symbol, is Analyte Code_Test Organism Type_TRV Type (see Example A-20).

Example A-20 Graph Group IDs

1746-01-6_TM_CS

11096-82-5_TM_GMM

TRV Type

The final TRV type is noted here. For birds and mammals, Chronic GMM NOAEL or Chronic CS TRV is entered. TRV type for earthworms and plants is entered as Chronic GMM NOEC or Chronic CS NOEC. In cases where a subset GMM TRV is created (i.e., a TRV calculated from a data set smaller than the original GMM TRV data set), the type is entered as Chronic subset GMM NOAEL or Chronic subset GMM NOEC.

TRV Final Value

The value of the GMM TRV, subset GMM TRV, or CS TRV is entered here. This is the value after all calculations have been completed. Calculations include those for daily dose rates, moisture conversions, and any others from Part 2 records plus any contributions from UFs to be accounted for in this Part 3 record.

TRV Units

For birds and mammals, the GMM or CS TRV is presented in units of mg/kg/d (representing mg chemical/kg body weight/d), while earthworms and plants have units of mg/kg (mg chemical/kg soil).

Selected TRV

In this field, YES or NO is entered for each LANL GMM or CS TRV depending on whether or not it will be used in the ESL models for the Ecorisk Database. According to the tiered TRV development approach for the Ecorisk Database, the most preferred TRV is an EPA ecological soil screening level (Eco-SSL) TRV.

If one does not exist, the LANL GMM TRV is used, followed by the LANL CS TRV, then a secondary source TRV from another published source. Based on this hierarchy, it is likely that if a GMM TRV is developed, an EPA Eco-SSL TRV does not exist; therefore, YES is almost always entered for GMM TRVs. However, if the GMM TRV is not considered suitable, NO will be placed in its corresponding field, and YES will be entered for an alternative TRV (i.e., subset GMM TRV, CS TRV, or secondary source TRV), whichever of the more preferred TRVs is available and most suitable. This field can later be updated should an EPA Eco-SSL become available to replace a GMM TRV or should a GMM TRV or CS TRV be developed to replace a CS TRV or secondary source TRV, respectively.[5]

ESL Media

For birds and mammals, the ESL media are soil, sediment, or water. For plants and earthworms, only one ESL medium of soil is used. If the GMM TRV data set or CS TRV represents food exposure for birds and mammals, two records are created: one each for soil and sediment ESLs. If the GMM TRV data set or CS TRV represents drinking water exposure for birds and mammals, only one record for water is created. Only one record (soil) is needed for each earthworm or plant and chemical combination.

Functional Group

The code A, for all functional groups relevant to the test organism group (bird, invertebrate, mammal, or plant), is entered for GMM or CS TRVs unless it has been determined that the TRV is protective of certain functional groups only. An example is Aroclor-1260, where it was decided that the GMM TRV was not protective enough of the carnivore functional group because according to the data set, the TRV was not protective of mustelids, in which the reproductive effects of polychlorinated biphenyl exposure is well-documented. Instead, the LANL CS TRV for Aroclor-1260 was used. The GMM TRV for Aroclor-1260, however, was used for all other functional groups (all noncarnivores). The coding for the Aroclor-1260 GMM TRV record was N-C for noncarnivores while the coding for the Aroclor-1260 CS TRV was C for carnivores.

TRV Confidence Rating

High, medium, or low is typed in this field for GMM or CS TRVs. Low is rarely, if ever, seen because data receiving a low confidence rating results in the primary toxicity study being rereviewed and eliminated from the data set for GMM or CS TRVs. For CS TRVs, a brief description of the number and type of experiments, confidence ratings, and endpoint categories also follows (e.g., “Medium. Data set consists of 1 experiment, 1 medium confidence PTV, and 1 survival endpoint.”). This extra information helps Ecorisk Database users to see the breadth of the data set from which the CS TRV was chosen in addition to the confidence rating of the single value, which is based on the type and degree of detail of information of the study from which it was obtained.

[5] In the early developmental stages of the Ecorisk Database, before GMM TRVs were developed, CS TRVs representing food exposure were used in soil, sediment, and water ESL models. Likewise, CS TRVs representing drinking water exposures were used in all ESL models as well. Notes regarding bioavailability of the chemical in one medium versus the other were made in the report. Currently, GMM and CS TRVs for food are limited to soil and sediment ESL models only, while TRVs representing drinking water exposures are used only in water ESL models.

Primary Toxicity Paper Reference ID

Because the GMM TRV is usually based on more than one primary toxicity reference, this field is not applicable. Ref ID 0001, which represents not applicable, is entered. For CS TRVs, this field contains the Ref ID of the reference containing the information from which the TRV originated.

TRV Reference ID

The Ref ID for the version of the Ecorisk Database in which this new record (GMM or CS TRV) will appear is entered.

Description of TRV Source

There are various options in the list, but for new Part 3 records that result in the addition of a new LANL GMM or CS TRV to the Ecorisk Database, the selection should be “LANL derived value based on reviewed primary data.”

Exposure Medium

The exposure medium that the GMM or CS TRV represents is selected from the drop-down list.

Exposure Route

The primary exposure route that the GMM or CS TRV represents is selected from the drop-down list.

Organism Name

The organism group representing the organisms in the GMM TRV data set (i.e., bird, mammal, invertebrate, or plant) is selected from the drop-down list. For CS TRVs, the organism name is the common name of the organism represented (e.g., “Rat, Sprague-Dawley”). This is selected from the drop-down list as well.

Organism ID

The code for the organism categories represented by the GMM or CS TRV (as seen in PTSE Part 1, Data Entry) is selected from the drop-down list. The four choices usually selected in new Part 3 records are SLE for earthworms, TB for terrestrial bird, TM for terrestrial mammals, and TP for terrestrial plants. Note that sometimes a bird that is considered an aquatic species is represented in the terrestrial data set (e.g., mallard duck). The TB code is still used for these organisms because they are considered to toxicologically represent a surrogate for terrestrial species. Other aquatic species for mammals, invertebrates, or plants are rejected from the literature set used for review, so they should not be encountered this far into the PTSE process.

Screening Receptor Group ID

The code for the organism group represented by the GMM or CS TRV is selected from the drop-down list. The four choices usually selected in new Part 3 records are B for bird, I for invertebrates (earthworms), M for mammals, and P for plants.

Chemical ID

The analyte code that the GMM or CS TRV represents is selected from the drop-down list.

Surrogate Chemical ID

If a surrogate chemical is used, the analyte code for the surrogate chemical is selected. Otherwise, the analyte code the GMM or CS TRV represents is selected from the drop down list; it matches the Chemical ID.

Discussion

GMM TRVs

For GMM TRVs, this field holds two paragraphs, the first discusses an overview of the data set used to derive the TRV, and the second is a conclusion summary. The first paragraph includes the following information:

- type of TRV (GMM),
- exposure medium,
- chemical and organism group of concern,
- value of GMM TRV and its units,
- number of chronic NOAEL- and NOEC-based effect levels (PTVs) used to calculate the GMM TRV,
- number of references in the data set,
- number of experiments in the data set,
- number of unique measurements (endpoints) in the data set,
- number of phylogenetic test organism orders,
- endpoint categories represented in the data set,
- number or percent of high, medium, and low PTV confidence ratings,
- exposure routes, and
- relevance or relationship between test exposure route and exposure route of concern for the particular ESL of concern (i.e., sediment, soil, water).

The conclusion paragraph for GMM TRVs summarizes the suitability of the GMM TRV for use in ESL models. The suitability of the GMM TRV is based on further evaluation of the distribution of chronic NOAEL- or NOEC-based effect levels, comparison of the GMM TRV to the lowest chronic LOAEL- or LOEC-based effect level, and comparison of the GMM TRV to other published TRVs. Although this general discussion field is the first of the discussion fields, this field is usually completed last in the data entry process for Part 3. Each of the other discussion fields is explained in detail below. The conclusion paragraph for GMM TRVs includes

- the GMM TRV confidence rating;
- a numbered list of scoring criteria in support of this confidence rating;

- a statement of whether the comparison of the GMM TRV to other published TRVs is acceptable;
- a statement of why bimodality of the data set distribution could not be assessed, if needed;
- another numbered list of criteria, not listed above, that lowered or do not support the confidence rating;
- brief explanation(s) of why criteria did not score well or did not strongly support confidence rating;
- explanation of whether GMM TRV is suitable or not; and
- suggested alternatives for TRVs, if needed.

CS TRVs

The discussion for CS TRVs usually consists of four paragraphs. The first offers a summary of what the ideal TRV represents (i.e., the most protective value that best represents an ecologically relevant endpoint, exposure route and medium, exposure period, and effect level). The second paragraph is titled, "Data Set Considered for Selection of Value," and describes the contents of the data set from which the CS TRV was selected. The following information is presented in the second paragraph:

- number of references,
- number of experiments,
- number of endpoint types,
- types of measurement endpoint categories,
- test organisms represented,
- types of exposure media and routes,
- types of exposure duration categories, and
- types of effect levels.

The third paragraph in the discussion for CS TRVs is "Justification for Selection of Value." The value and effect level type of the PTV selected for use in development of the CS TRV are entered here as well as an explanation of why the PTV was selected over others in the data set. Usually, the highest NOAEL below the lowest LOAEL is selected for use, and this statement is entered. However, if this is not the case, an explanation is needed with further support as to why the TRV is still considered suitable. Some examples of further discussion supporting the selection of the PTV include the following: a comparison of the measurement endpoint the PTV represents to other measurement endpoints available in the data set, an explanation of the sensitivity of certain test organisms over others, and/or a comparison of the exposure conditions (e.g., length of exposure durations, exposures that occurred during critical life stages, *ad libitum* oral ingestion vs. scheduled feedings).

The fourth and final paragraph, "Description of Critical Study," provides more detail of the specific study from which the PTV was selected. The following information is provided:

- exposure length,
- whether exposure occurred during a critical life stage,
- chemical,
- chemical form,

- exposure medium,
- exposure route,
- test organism,
- dose or range of doses and units,
- whether doses were nominal (target) or empirical (verified/measured) concentrations,
- relationship of test exposure route to exposure route of concern,
- whether dose rate parameters (e.g., body weight, ingestion or inhalation rates) were provided or obtained from another source, and
- whether exposure concentrations were in dry or wet weight, and if in wet weight, the moisture basis and an explanation of the conversion to dry weight.

Uncertainty Factor(s)

This field is left blank for GMM TRVs because UFs should already have been applied to PTVs to approximate chronic NOAEL- or NOEC-based effect levels used in the calculation. Rather, the statement "Prior to the calculation of the GMM TRV, the PTVs in the data set were extrapolated to chronic NOAEL-based effect levels by applying UFs." is entered, and a table of applied UFs is provided in the Ecorisk Database. For CS TRVs, a brief explanation of whether UFs are needed or not is provided here. If UFs are needed, a brief description outlines the type (e.g., "A UF of 100 for extrapolation from an acute to a chronic exposure duration was applied."). Table A-13 shows the UFs applied to approximate chronic NOAEL- or NOEC-based effect levels, or TRVs, from PTVs.

Calculations

Essentially, the calculation for the GMM TRV ($\text{GMM TRV} = \sqrt[n]{EL_1 * EL_2 * EL_3 * ... EL_n}$) should be entered here. However, because this exact equation cannot be entered in an Access field, the following description is entered instead, "GMM TRV = nth root of (EL1 x EL2 x EL3 x …ELn) where n is greater than or equal to 3, and each effect level represents a chronic NOAEL-based effect level for an oral ingestion exposure for an ecologically relevant effect (i.e., reproduction or development, survival or adult body weight or size changes)."

For CS TRVs, if a UF is applied to the PTV to derive the TRV, this calculation is entered here [e.g., Chronic NOAEL = Chronic LOAEL(0.1)].

Data Set Distribution

This field is not applicable for CS TRVs; N/A is entered. For GMM TRVs, the data set of chronic NOAEL- or NOEC-based effect levels is evaluated to determine the type of distribution (e.g., normal, positively skewed, negatively skewed, bimodal) and the variance of the distribution based on the number of GSDs from the GMM TRV. Also, any effect levels that may appear to be outliers are discussed (see the Geometric Standard Deviations and Outliers section below). Furthermore, the distribution is also evaluated for patterns or trends based on test organisms, exposure durations, original effect level types, or endpoint categories. Any observed trends are discussed.

Types of Distributions

If the distribution is negatively skewed, there are a larger number of higher values that most likely represent chronic or C-CL NOAELs/NOECs for ecologically relevant endpoints because no UFs are applied for exposure duration or effect level type; therefore, the GMM TRV is influenced by these higher values and is more likely to approximate a true NOAEL/NOEC. A negatively skewed distribution, in the context of a GMM TRV, is preferred because of this. On the other hand, if the GMM TRV is based on a positively skewed distribution, this means it is usually biased towards the lower values of the distribution and is therefore protective of the higher ones, which are usually associated with chronic or C-CL NOAELs/NOECs. For this reason, a positively skewed distribution is also acceptable because the GMM TRV is overly conservative as a result of the large number of lower values extrapolated from original effect levels other than chronic NOAELs/NOECs. If the distribution shows a bimodal pattern, this indicates there are two clusters of values according to test organisms, original effect levels, exposure durations, and/or endpoint categories. For example, there may be a large group of effect levels associated with acute and subchronic values and another large group of effect levels associated with chronic and C-CL values. It becomes difficult to determine if the GMM TRV is appropriate in this case. Revision of the GMM TRV to a subset GMM TRV may be preferred to represent the group of values that is more ecologically relevant (e.g., the chronic and C-CL values, which are more likely to represent more ecologically relevant endpoints such as reproduction/development effects).

Geometric Standard Deviations and Outliers

Because the TRV is based on a GMM of a minimum of three NOAEL/NOEC-based effect levels, the spread of data is assessed by calculating the GSD of the GMM TRV. GSDs and outliers are discussed in the assessment of data set distributions in order to (1) describe the variability of the data set, (2) outline any patterns associated with extreme values vs. those within 2 GSDs (e.g., outliers with high values may be associated with chronic durations because no UFs were applied, while values closer to the GMM were extrapolated from exposure durations and/or effect levels other than chronic NOAELs/NOECs with the application of UFs), and (3) provide support to the confidence rating of the GMM TRV where distributions with lower variance have higher confidence (i.e., GMM TRV is a better estimate of the NOAEL) vs. where distributions with higher variance have lower confidence. Some researchers consider any values beyond 2 standard deviations extreme values, or outliers (StatSoft Inc. 2005, 089447, Ref ID 1486). However, while outliers are described to be observations that do not exist within the characteristic distribution of the data, the decision to keep or remove an outlier often relies on professional judgment based on knowledge of the parameter being studied (Samuels 1989, 089450, Ref ID 1485; StatSoft Inc. 2005, 089447, Ref ID 1486). Therefore, in GMM TRV data sets, outliers are usable because they have been evaluated and screened using the same rigorous process as all other values derived using the PTSE process. All effect levels are based on PTVs derived from the PTSE process, and if a PTV was associated with a low confidence based on little or no supporting data, it was eliminated before the formulation of the data set used for the calculation of the GMM TRV. Furthermore, effect levels allowed in the data set that have larger values are often associated with chronic or C-CL PTVs, whereas the lower effect levels allowed in the data set were extrapolated from PTVs that were subchronic or acute NOAELs/NOECs, LOAELs/LOECs, or other effect levels (e.g., LD_{50}s) with the use of UFs. The lower, extrapolated values are accepted in the GMM TRV data set because in screening-level ecological risk assessments, the use of a TRV that is conservative, rather than under-protective, is preferred (LANL 2004, 087630, Ref ID 1554). It is important to note that the nature of the data set distribution such as bimodality is evaluated for data sets with 10 or more chronic NOAEL (NOEC)-based effect levels, so for smaller data sets the reasonability of assessing true outliers is less.

Lowest LOAEL or LOEC

This field is not applicable for CS TRVs; N/A is entered. The GMM TRV is compared to the lowest chronic LOAEL- or LOEC-based effect level derived from the GMM TRV data set (see section A-4.1.5) to determine whether it is protective of the most sensitive endpoint in the data set. If the GMM TRV is below the lowest LOAEL- or LOEC-based effect level, it is protective of all possible effects in the data set. However, the GMM TRV may be much less than the LOAEL- or LOEC-based effect level, and some consideration must be taken into account to determine whether it is overly protective. On the other hand, if the GMM TRV is greater than the LOAEL- or LOEC-based effect level, further investigation is needed to determine if the GMM TRV may not be protective enough. Examples of information to examine include what endpoint the LOAEL/LOEC or LOAEL- or LOEC-based effect level represents, whether it is more or less ecologically relevant than other endpoints in the data set, if there are other similar endpoints available and how their effect levels compare to the GMM TRV, and what original effect level was used to approximate the LOAEL- or LOEC-based effect level. The application of UFs may have made the chronic LOAEL- or (LOEC)-based effect level overly conservative; therefore, the GMM TRV may still be protective even though it is above the LOAEL (LOEC)-based effect level. This is further strengthened if it can be shown that the GMM TRV includes more ecologically relevant endpoints and chronic exposure durations.

LANL CS TRV Comparison

This field is not applicable for CS TRVs; N/A is entered. The GMM TRV is compared to the LANL CS TRV if one is available for the same chemical, organism, and exposure route/medium scenario of concern. It is noted whether it is above or below the LANL CS TRV and by how much. Justification is provided for the continued use of the GMM TRV if it is deemed reasonable. If not, justification is provided for using the LANL CS TRV or an alternative TRV.

ORNL CS TRV Comparison

This field is not applicable for CS TRVs; N/A is entered. The GMM TRV is compared to the ORNL CS TRV. It is noted whether it is above or below the ORNL CS TRV and by how much. Justification is provided for the continued use of the GMM TRV if it is deemed reasonable. If not, justification is provided for using the LANL CS TRV or an alternative TRV.

USEPA R6 CS TRV Comparison

This field is not applicable for CS TRVs; N/A is entered. The GMM TRV is compared to the USEPA R6 CS TRV. It is noted whether it is above or below the USEPA R6 CS TRV and by how much. Justification is provided for the continued use of the GMM TRV if it is deemed reasonable. If not, justification is provided for using the LANL CS TRV or an alternative TRV.

SNL CS TRV Comparison

This field is not applicable for CS TRVs; N/A is entered. The GMM TRV is compared to the SNL CS TRV. It is noted whether it is above or below the SNL CS TRV and by how much. Justification is provided for the continued use of the GMM TRV if it is deemed reasonable. If not, justification is provided for using the LANL CS TRV or an alternative TRV.

LANL T&E CS TRV Comparison

This field is not applicable for CS TRVs; N/A is entered. The GMM TRV is compared to the LANL T&E CS TRV. It is noted whether it is above or below the LANL T&E CS TRV and by how much. Justification is provided for the continued use of the GMM TRV if it is deemed reasonable. If not, justification is provided for using the LANL CS TRV or an alternative TRV.

Note: More comparisons of the LANL TRV to other published TRVs may become necessary if a LANL TRV is developed and there exists a TRV from another organization not mentioned above (e.g., USACHPPM TRVs). Comparison fields will be added should this situation arise.

Associated References

A button is clicked to bring up a pop-up form for entry of Ref IDs cited in any of the fields above. First, the Part 3 Record ID is copied from the main data entry form and pasted into the Part 3 Record ID field of this new pop-up form. If references other than the primary toxicity study noted in the Primary Toxicity Paper Reference ID field are noted in the Discussion, Uncertainty Factor(s), Calculations, Data Set Distribution, Lowest LOAEL (LOEC) Comparison, or Other Published TRV Comparison fields, the Ref IDs for these are listed in the appropriate spaces. If no other references were mentioned, the default Ref ID is 0001.

A-5.0 PTSE PART 4, TRV APPROVAL

After new GMM or CS TRVs are developed, the summary report Excel files containing the tables and graphs are sent to the EP Directorate's Risk Assessment Team for review. Based on their areas of knowledge and expertise, Risk Team members return comments, usually done in tracked-changes mode in the TRV summary report in Word, on TRV derivation methods, approximations of effect levels, chemical bioavailability, biological test organism or screening receptor information, etc. Sometimes their judgment may lead to an exception where a CS TRV may be used in spite of the availability of a GMM TRV. This may be done if the GMM TRV is judged to be under-protective of sensitive organisms to a particular chemical. Other times, Risk Team members may suggest a change from a GMM TRV to a subset GMM TRV, which is based on a subset of the original data set for a particular chemical, receptor group, and exposure scenario of concern, based on their knowledge of the behavior of that chemical with organisms in the wild under certain conditions. The PTSE reviewers consider the Risk Team comments and revise the information as appropriate. Documentation of any deviations is provided in the appropriate places in the PTSE Part 3 process (TRV summary report), especially in the discussion field.

A-6.0 REFERENCES

The following list includes all documents cited in this appendix. Parenthetical information following each reference provides the author(s), publication date, and ER ID. This information is also included in text citations. ER IDs are assigned by the Environmental Programs Directorate's Records Processing Facility (RPF) and are used to locate the document at the RPF and, where applicable, in the master reference set.

Aulerich, R.J., R.K. Ringer, and S. Iwamoto, March 1974. "Effects of Dietary Mercury on Mink," *Archives of Environmental Contamination and Toxicology*, Vol. 2, No. 1, pp. 43–51. (Aulerich et al. 1974, 059794, Ref ID 0016)

Brunström, B., D. Broman, and C. Näf, August 1991. "Toxicity and EROD-Inducing Potency of 24 Polycyclic Aromatic Hydrocarbons (PAHs) in Chick Embryos," *Archives of Toxicology*, Vol. 65, No. 6, pp. 485–489. (Brunström et al. 1991, 070812, Ref ID 0666)

Dourson, M.L., and J.F. Stara, 1983. "Regulatory History and Experimental Support of Uncertainty (Safety) Factors," *Regulatory Toxicology and Pharmacology*, Vol. 3, pp. 224–238. (Dourson and Stara 1983, 073474, Ref ID 1379)

Dunning, J.B., Jr., May 1984. *Body Weights of 686 Species of North American Birds*, Western Bird Banding Association Monograph No. 1, Eldon Publishing, Cave Creek, Arizona. (Dunning 1984, 089463, Ref ID 0086)

Efroymson, R.A., M.E. Will, G.W. Suter II, and A.C. Wooten, November 1997. "Toxicological Benchmarks for Screening Contaminants of Potential Concern for Effects on Terrestrial Plants: 1997 Revision," Report No. ES/ER/TM-85/R3, Oak Ridge National Laboratory, Oak Ridge, Tennessee. (Efroymson et al. 1997, 059231, Ref ID 0094)

EPA (U.S. Environmental Protection Agency), February 1988. "Recommendations for and Documentation of Biological Values for Use in Risk Assessment," EPA/600/6-87/008, Environmental Criteria and Assessment Office, Office of Health and Environmental Assessment, Office of Research and Development, U.S. Environmental Protection Agency, Cincinatti, Ohio. (EPA 1988, 089464, Ref ID 0084)

EPA (U.S. Environmental Protection Agency), December 1993. "Wildlife Exposure Factors Handbook," Vol. I of II, EPA/600/R-93/187a, Office of Research and Development, Washington, D.C. (EPA 1993, 059384, Ref ID 0561)

EPA (U.S. Environmental Protection Agency), August 1999. "Screening Level Ecological Risk Assessment Protocol for Hazardous Waste Combustion Facilities," Volume One, peer review draft, EPA530-D-99-001A, Office of Solid Waste and Emergency Response, Washington, D.C. (EPA 1999, 070923, Ref ID 0716)

EPA (U.S. Environmental Protection Agency), November 2003. "Guidance for Developing Ecological Soil Screening Levels," OSWER Directive No. 92857-55, Office of Solid Waste and Emergency Response, Washington, D.C. (EPA 2003, 085643, Ref ID 1400)

Gallegos, A.F., G.J. Gonzales, K.D. Bennett, L.E. Pratt, and D.S. Cram, June 1997. "A Spatially Dynamic Preliminary Risk Assessment of the American Peregrine Falcon at the Los Alamos National Laboratory," Version 1.0, Los Alamos National Laboratory report LA-13321-MS, Los Alamos, New Mexico. (Gallegos et al. 1997, 059790, Ref ID 0016, Ref ID 0427)

Gogal, R.M., Jr., M.S. Johnson, C.T. Larsen, M.R. Prater, R.B. Duncan, D.L. Ward, and S.D. Holladay, January 2002. "Influence of Dietary 2,4,6-Trinitrotoluene Exposure in the Northern Bobwhite (*Colinus virginianus*)," *Environmental Toxicology and Chemistry*, Vol. 21, No. 1, pp. 81–86. (Gogal et al. 2002, 089461, Ref ID 1216)

Goldberg, M.E., H.E. Johnson, U.C. Pozzani, and H.F. Smyth, Jr., 1964. "Behavioural Response of Rats During Inhalation of Trichloroethylene and Carbon Disulphide Vapours," *Acta Pharmacologica et Toxicologica*, Vol. 21, No. 1, pp. 36–44. (Goldberg et al. 1964, 089460, Ref ID 1348)

IT Corporation (International Technology Corporation), November 10, 1997. "Predictive Ecological Risk Assessment Methodology–Environmental Restoration Program," IT Corporation, Albuquerque, New Mexico. (IT Corporation 1997, 057136, Ref ID 0092)

Ivankovic, S., and R. Preussmann, 1975. "Absence of Toxic and Carcinogenic Effects after Administration of High Doses and Chronic Oxide Pigment in Subacute and Long-Term Feeding Experiments in Rats," *Food and Cosmetic Toxicology*, Vol. 13, pp. 347-351. (Ivankovic and Preussmann 1975, 059251, Ref ID 0010)

Johnson, M.S., November 2001. "Wildlife Toxicity Assessment for 2,4,6-Trinitrotoluene (TNT)," Document No. 39-EJ1138-01B, U.S. Army Center for Health Promotion and Preventive Medicine, Aberdeen Proving Ground, Maryland. (Johnson 2001, 110044, Ref ID 1195)

Johnson, M.S., and G. Holdsworth, November 2001. "Wildlife Toxicity Assessment for Pentaerythritol Tetranitrate (PETN)," Document No. 37-EJ1138-01G, U.S. Army Center for Health Promotion and Preventive Medicine, Aberdeen Proving Ground, Maryland. (Johnson and Holdsworth 2001, 089455, Ref ID 1451)

Johnson, M.S., and G. Holdsworth, November 2001. "Wildlife Toxicity Assessment for High Melting Explosive (HMX)," Document No. 39-EJ1138-01E, U.S. Army Center for Health Promotion and Preventive Medicine, Aberdeen Proving Ground, Maryland. (Johnson and Holdsworth 2001, 073781, Ref ID 1450)

Johnson, M.S., and G. Holdsworth, December 2001. "Wildlife Toxicity Assessment for 2-Amino-4,6-Dinitrotoluene and 4-Amino-2,6-Dinitrotoluene," Document No. 39-EJ1138-01D, U.S. Army Center for Health Promotion and Preventive Medicine, Aberdeen Proving Ground, Maryland. (Johnson and Holdsworth 2001, 089454, Ref ID 1449)

Johnson, M.S., and L.P. Midgley, November 2001. "Wildlife Toxicity Assessment for Nitroglycerin (NG)," Document No. 37-EJ1138-01F, U.S. Army Center for Health Promotion and Preventive Medicine, Aberdeen Proving Ground, Maryland. (Johnson and Midgley 2001, 089453, Ref ID 1446)

Johnston, T., July 1997. "Nomenclature Rules for: EDD_ANALYTE_CODE_LIST Table Data Fields, Revision 1," Los Alamos National Laboratory, Los Alamos, New Mexico. (Johnston 1997, 059791, Ref ID 0576)

LANL (Los Alamos National Laboratory), November 2003. "Ecorisk Database (Release 2.0)," on CD, Los Alamos National Laboratory, Los Alamos, New Mexico. (LANL 2003, 080117, Ref ID 0016, Ref ID 1294)

LANL (Los Alamos National Laboratory), September 2004. "Ecorisk Database (Release 2.1)," on CD, LA-UR-04-7304, Los Alamos National Laboratory, Los Alamos, New Mexico. (LANL 2004, 087386, Ref ID 1442)

LANL (Los Alamos National Laboratory), December 2004. "Screening-Level Ecological Risk Assessment Methods, Revision 2," Los Alamos National Laboratory document LA-UR-04-8246, Los Alamos, New Mexico. (LANL 2004, 087630, Ref ID 1554)

Layton, D., B. Mallon, W. Mitchell, L. Hall, R. Fish, L. Perry, G. Snyder, K. Bogen, W. Malloch, C. Ham, and P. Dowd, December 1987. "Conventional Weapons Demilitarization: Health and Environmental Effects Data-Base Assessment, Explosives and Their Co-contaminants, Final Report, Phase II," Technical Report No. UCRL-21109, Environmental Sciences Division, Lawrence Livermore National Laboratory, Livermore, California. (Layton et al. 1987, 014703, Ref ID 0552)

Maxwell, C.J., May 1996. "Ecological Criteria Document for Octahydro-1,3,5,7-tetranitro-1,3,5,7-tetrazocine (HMX)," draft, Oak Ridge National Laboratory, Oak Ridge, Tennessee. (Maxwell 1996, 059275, Ref ID 0467)

OECD (Organisation for Economic Co-operation and Development), April 4, 1984. "Earthworm, Acute Toxicity Tests," OECD Guideline for Testing of Chemicals, Guideline No. 207, Organisation for Economic Co-operation and Development, Paris, France. (OECD 1984, 109940, Ref ID 1235)

PRC Environmental Management Inc., August 26, 1996. "Region 5 Ecological Data Quality Levels," Final Report, prepared for the U.S. Environmental Protection Agency, Chicago, Illinois. (PRC Environmental Management Inc. 1996, 059989, Ref ID 0574)

Quast, J.F., M.J. McKenna, L.W. Rampy, and J.M. Norris, January 1983. "Chronic Toxicity and Oncogenicity Study on Inhaled Vinylidene Chloride in Rats," *Fundamental and Applied Toxicology*, Vol. 6, No. 1, pp. 105–144. (Quast et al. 1986, 109942, Ref ID 1360)

Ryti, R.T., J. Markwiese, R. Mirenda, and L. Soholt, April 2004. "Preliminary Remediation Goals for Terrestrial Wildlife," *Human and Ecological Risk Assessment*, Vol. 10, No. 2, pp. 437–450. (Ryti et al. 2004, 076074, Ref ID 1481)

Salice, C.J., and G. Holdsworth, November 2001. "Wildlife Toxicity Assessment for 1,3,5-Trinitrobenzene (1,3,5-TNB)," Document No. 39-EJ1138-01B, U.S. Army Center for Health Promotion and Preventive Medicine (USACHPPM), Aberdeen Proving Ground, Maryland. (Salice and Holdsworth 2001, 089452, Ref ID 1447)

Salice, C.J., and G. Holdsworth, December 2001. "Wildlife Toxicity Assessment for 1,3-Dinitrobenzene (m-DNB)," Document No. 39-EJ1138-01A, U.S. Army Center for Health Promotion and Preventive Medicine (USACHPPM), Aberdeen Proving Ground, Maryland. (Salice and Holdsworth 2001, 089451, Ref ID 1448)

Salice, C.J., and G. Holdsworth, July 2002. "Wildlife Toxicity Assessment for 1,3,5-Trinitrohexahydro-1,3,5-Triazine (RDX)," Document No. 37-EJ1138-01H, U.S. Army Center for Health Promotion and Preventive Medicine (USACHPPM), Aberdeen Proving Ground, Maryland. (Salice and Holdsworth 2002, 073780, Ref ID 1452)

Sample, B.E., D.M. Opresko, and G.W. Suter, II, 1996. "Toxicological Benchmarks for Wildlife: 1996 Revision," ES/ER/TM-86/R3, Oak Ridge National Laboratory, Oak Ridge, Tennessee. (Sample et al. 1996, 059306, Ref ID 0344)

Samuels, M.L., 1989. Excerpted page from *Statistics for the Life Sciences*, Dellen Publishing Company, San Francisco, California. (Samuels 1989, 089450, Ref ID 1485)

Stahl, W.R., March 1967. "Scaling of Respiratory Variables in Mammals," *Journal of Applied Physiology*, Vol. 22, No. 3, pp. 453–460. (Stahl 1967, 063119, Ref ID 1522)

StatSoft Inc., August 1, 2005. "Electronic Textbook StatSoft," Elementary Concepts in Statistics section, Outliers subsection, StatSoft, Inc., Tulsa, Oklahoma, http://www.statsoft.com/textbook/. (StatSoft Inc., 2005, 089447, Ref ID 1486)

Suter, G.W., II, B.E. Sample, D.S. Jones, T.L. Ashwood, and J.M. Loar, September 1995. "Approach and Strategy for Performing Ecological Risk Assessments for the U.S. Department of Energy's Oak Ridge Reservation: 1995 Revision," Report No. ES/ER/TM-33/R2, Oak Ridge National Laboratory, Oak Ridge, Tennessee. (Suter et al. 1995, 089449, Ref ID 1088)

Talmage, S.S., and D.M. Opresko, May 1995. "Ecological Criteria Document for 2,4,6-Trinitrotoluene (CAS No. 118-96-7)," draft, Oak Ridge National Laboratory, Oak Ridge, Tennessee. (Talmage and Opresko 1995, 059328, Ref ID 0469)

Talmage, S.S., and D.M. Opresko, May 1996. "Ecological Criteria Document for Hexahydro-1,3,5-trinitro-1,3,5-triazine (RDX) (CAS No. 121-82-4)," draft, Oak Ridge National Laboratory, Oak Ridge, Tennessee. (Talmage and Opresko 1996, 059329, Ref ID 0470)

Talmage, S.S., D.M. Opresko, C.J. Maxwell, C.J.E. Welsh, F.M. Cretella, P.S. Hovatter, and F.B. Daniel, 1999. "Nitroaromatic Munition Compounds: Environmental Effects and Screening Values," *Reviews of Environmental Contamination and Toxicology*, Vol. 161, pp. 1-156. (Talmage et al. 1999, 063021, Ref ID 0480)

York, R.G., B.M. Sowry, L. Hastings, and J.M. Manson, February 1982. "Evaluation of Teratogenicity and Neurotoxicity with Maternal Inhalation Exposure to Methyl Chloroform," *Journal of Toxicology and Environmental Health*, Vol. 9, No. 2, pp. 251–266. (York et al. 1982, 089462, Ref ID 1359)

Attachment A-1

GMM TRV Summary Report Example

TRV Summary Report

Ecorisk Database Release 2.1 (September 2004)

***TRV Summary ID:** 118-96-7_SOIL_P_TP_Plant_Soil_ChronicGMMNOEC_1442_0001

GMM TRV ID: 118-96-7PGMM

LANL TRV: YES **Data Source:** LANL derived value based on reviewed primary data

Analyte Name: Trinitrotoluene[2,4,6-] **Analyte Code:** 118-96-7 **Analyte Group:** High Explosive

ESL Receptor Group: P **Functional Group:** A **ESL Media:** SOIL

Test Chemical Code: 118-96-7

Test Organism ID: TP **Test Organism Common Name:** Plant

Final TRV: Chronic GMM NOEC 62.1 mg/kg **Exposure Route** U_SC+R

Derivation Notes: The GMM TRV for 2, 4, 6- trinitrotoluene in soil of plants is equal to a chronic NOEC of 62.1 mg/kg. This GMM TRV is derived from a data set of 12 PTVs representing 3 references, 12 experiments, 6 unique measurements, and 3 phylogenetic test organism orders. Endpoint categories included in the data set are reproduction and development. Six of 12 PTVs (50%) are associated with high confidence while the rest are associated with medium confidence. Only uptake via seed coat and/or roots exposure route studies were included in the GMM TRV data set; therefore, the test exposure route matches the exposure route of concern for soil ESLs for plants. See the PTVs Considered, Test Organisms, and Original Effect Level Types tables for more details of the data set.

Conclusion:
Based on the evaluation of the GMM TRV data set distribution and trends (see Data Set Distribution Comments section) and the comparison of the GMM TRV to the lowest chronic LOEC-based EL (see the Lowest LOEC Comparison section) and other published TRVs (see the Comparison of GMM TRV to other Published TRVs section), the confidence in the GMM TRV is medium because the data set contains: 1) 10 or more experiments, 2) only uptake via seed coat and/or roots which match the exposure route of concern for plant, soil-ESLs, 3) 3 or more test organism orders, 4) more than 3 unique measurements, 5) only R/D endpoints, 6) 2 or more chronic or C-CL NOEC/LOEC pairs, 7) ELs associated with a mixture of high and medium confidence ratings, and 8) no bimodality or other pattern that negatively biases the GMM TRV. Also, the comparison of the GMM TRV to other published TRVs (LANL CS TRV and SNL CS TRV) is acceptable because it is lower than the LANL CS TRV, higher than the SNL CS TRV by only a factor of 2.1, and represents more supporting data than both CS TRVs. The confidence rating was lowered from high to medium because: 1) the GMM TRV is higher than the lowest chronic LOEC-based EL by a factor of 3 or more, and 2) greater than 75% of the ELs were more than 10 GSDs from the GMM TRV, indicating a moderately high variance for the distribution. The lowest chronic-LOEC based EL represents a study in which barley was exposed to TNT in forest soil, which may hold different soil properties than soil exposure media in other studies of this data set (e.g., artificial soil, soil collected from experimental field in Germany). The forest soil has a pH of 7.6, which is within the range of soil values at LANL (5.2 to 8.2; Ref ID 1380). Furthermore, the GMM TRV for different soil properties minimizes the chance that the value can be over or under conservative. Also, the moderately high variance is overridden by the fact that the GMM TRV is protective of the majority (8 of 12) of R/D endpoints in the data set. See the GMM TRV Confidence Rating table for details. In conclusion, the GMM TRV is considered protective of plant populations and the more sensitive individuals of threatened and endangered species because it considers multiple ecologically relevant endpoints and thus provides a more comprehensive TRV than a single CS TRV.

Uncertainty: Prior to the calculation of the GMM TRV, the PTVs in the data set were extrapolated to chronic NOEC-based ELs by applying UFs.

Calculations: GMM TRV = nth root of (EL1 x EL2 x EL3 x ...ELn) where n is greater than or equal to 3 and each EL represents a chronic NOEC-based EL for a seed coat and/or root uptake via soil exposure for an ecologically relevant effect (i.e., reproduction or development, survival, or mature plant weight or size changes).

Log Kow: **KocVu:** **Foc:**

Text Last Updated On: 10-Sep-04 **Value Last Updated On:** 20-Aug-04

Confidence Rating: Medium **NMED Concurrence Date:**

** Further details on the study/ effects/ toxicity values reviewed for this TRV are provided in the PTSE Part 1 (Study Details) and 2s (Study Evaluations) and in the Part 3 (TRV Summary) graph.*

Page 1 of 4

TRV Summary Report *Ecorisk Database Release 2.1 (September 2004)*

***TRV Summary ID:** 118-96-7_SOIL_P_TP_Plant_Soil_ChronicGMMNOEC_1442_0001

GMM TRV ID: 118-96-7PGMM

LANL TRV: YES **Data Source:** LANL derived value based on reviewed primary data

Data Set Distribution Comments:

The distribution of chronic NOEC-based ELs ranging from 5.59 to 355 mg/kg is positively skewed. One of the 12 ELs (8%) is within 2 GSDs, 3 (25%) are between 2 and 6 GSDs, 2 (17%) are between 6 and 10 GSDs, and the rest extend out to 71 GSDs from the GMM TRV, indicating moderately high variance. All but one of the chronic NOEC-based ELs are considered to be outliers (extreme values, or values beyond 2 GSDs), yet they are still usable because the high GSDs indicate a larger spread of data rather than errors in the values. The moderately high variance indicates that the GMM TRV may not as closely approximate the true TRV as one with a lower variability in its data set would. No bimodality was present in the data set distribution. It was observed that the test species in the Order Capparales (cress and turnip) had a narrow range in their chronic NOEC-based values (24-49 mg/kg) compared to Order Cyperales (barley, oat, wheat, yellow nutsedge) values which ranged from 5.59 to 355 mg/kg. Lettuce was the only test species present for Order Asterales. Original effect level types may have also played a role in the 2 lowest chronic NOEC-based values in Order Cyperales (and the data set) because UFs of 10 were applied to C-CL LOECs to extrapolate them to NOEC-based ELs. Patterns could not be evaluated for endpoint category or exposure duration because all chronic NOEC-based ELs represent C-CL values for R/D endpoints. The GMM TRV is below 42% of NOEC-based ELs. However, it's below 67% LOEC-based ELs (see the Lowest LOEC Comparison section), so it is still protective of the majority of endpoints.

Based on the evaluation of the distribution of the GMM TRV data set of chronic NOEC-based ELs, the GMM TRV is suitable because 1) it is based on a positively skewed distribution, and 2) and 3) it represents a variety of test species with different sensitivities and is protective of the majority of the data set because it is lower than 67% of the LOEC-based ELs. See the Graph of NOEC-based ELs for details.

Lowest LOAEL (LOEC) Comparison:

The range of chronic LOEC-based ELs is 13.66 to 461.5 mg/kg. The GMM TRV is above the lowest chronic LOEC-based EL (13.66 mg/kg) by a factor of 4.5. The lowest chronic LOEC-based EL is based on a C-CL LOEC for an R/D endpoint. The lowest chronic LOEC-based EL is based on barley exposure in forest soil, whereas in the other barley study, barley is exposed to TNT in artificial soil. The chronic LOEC-based EL for the barley exposure in artificial soil is also below the GMM TRV but by a factor of only 1.1, indicating that barley may be less sensitive in artificial soil. The GMM TRV is also above 2 other chronic LOEC-based ELs representing C-CL LOECs for R/D endpoints. These chronic LOEC-based ELs represent exposure to cress and turnip test species via soil collected from an experimental field at a biological station in Berlin, Germany. There are two other studies using the cress and turnip species as well, but they use a different type of soil that was provided by a Germany company. Therefore, the lower sensitivities the cress and turnip in the soil collected from the biological station may be due to the soil properties (e.g., pH, organic matter content). These 2 types of Germany soils were also used in studies for oat and wheat test species, but these plants were less sensitive; 3 of 4 chronic LOEC-based ELs were derived from C-CL NOECs for R/D endpoints, indicating that no adverse effects were observed at the highest concentration administered in the study and that the chronic LOEC-based ELs may be overly conservative due to the application of test organism specific LOEC/NOEC factors (Ref ID 1487) to extrapolate the LOECs from the NOECs. Still, the GMM TRV is protective of these 3 chronic LOEC-based ELs as well as the 4th one which is based on a C-CL LOEC for an R/D endpoint. The GMM TRV is also below the remaining 4 chronic LOEC-based ELs which are based on C-CL NOECs (1) and LOECs (3) for R/D endpoints. Although the GMM TRV is below 4 chronic LOEC-based ELs, it is protective of the majority of the data set (67%) which contains a variety of test species and soil types. See the Graph of LOEC-based ELs for details.

LANL CS TRV Comparison:

The GMM TRV is lower than the LANL CS TRV (80 mg/kg) by a factor of 4. This CS TRV is based on a chronic NOEC for a WC endpoint (PTV ID 0379_118-96-7_1A) and is included in the data set for the GMM TRV. The LANL CS TRV represents effects on yield (as above-ground plant material) of yellow nutsedge. This endpoint was selected for the CS TRV because at the time, it was the only endpoint available in a data set of 1 reference and 1 experiment. More data was obtained, leading to the derivation of a GMM

TRV Summary Report *Ecorisk Database Release 2.1 (September 2004)*

***TRV Summary ID:** 118-96-7_SOIL_P_TP_Plant_Soil_ChronicGMMNOEC_1442_0001

GMM TRV ID: 118-96-7PGMM

LANL TRV: YES **Data Source:** LANL derived value based on reviewed primary data

TRV.

ORNL CS TRV Comparison: ORNL does not have a CS TRV available for comparison.

USEPA R6 CS TRV Comparison: USEPA R6 does not have a CS TRV available for comparison.

SNL CS TRV Comparison: The GMM TRV is higher than the SNL CS TRV (30 mg/kg) by a factor of only 2.1. This CS TRV is based on a LOAEL for growth effects on blando brome grass in soil. No UFs were applied. The endpoint that the SNL CS TRV represents is not included in the GMM TRV data set because a hard copy of the reference (Ref ID 0463) could not be located at the time.

Page 3 of 4

TRV Summary Report *Ecorisk Database Release 2.1 (September 2004)*

***TRV Summary ID:** 118-96-7_SOIL_P_TP_Plant_Soil_ChronicGMMNOEC_1442_0001

GMM TRV ID: 118-96-7PGMM

LANL TRV: YES **Data Source:** LANL derived value based on reviewed primary data

REFERENCE LIST	Ref ID	Citation
Primary Toxicity Study Reference CS TRV:	0001	NOT APPLICABLE
Primary Toxicity Study Reference(s) GMM TRV:	**(NOT APPLICABLE, if no references are listed in this section)**	
	0379	Pennington, JC. 1988. Soil Sorption and Plant Uptake of 2,4,6-Trinitrotoluene. AD A200 502. Technical Report EL-88-12. US Army Biomedical Research and Development Laboratory, Fort Detrick, Frederick, MD.
	1455	Robidoux, PY, G Bardai, L Paquet, G Ampleman, S Thiboutot, J Hawari, and GI Sunahara. 2003. Phytotoxicity of 2,4,6-Trinitrotoluene (TNT) and Octahydro-1,3,5,7-Tetranitro-1,3,5,7-Tetrazocine (HMX) in Spiked Artificial and Natural Forest Soils. Arch. Environ. Contam. Toxicol., 44: 198-209.
	1459	Gong, P, B-M Wilke, and S Fleischmann. 1999. Soil-Based Phytoxicity of 2,4,6-Trinitrotoluene (TNT) to Terrestrial Higher Plants. Arch. Environ. Contam. Toxicol., 36: 152-157.
TRV reference:	1442	Los Alamos National Laboratory (LANL), 2004 (Sept.). ECORISK Database (Release 2.1). LA-UR-04-7304. RRES-R package #186, ER ID 87386. Risk Reduction and Environmental Stewardship Remediation Service Program, Los Alamos National Laboratory, Los Alamos, NM.
Additional References:	0463	Cataldo, DA, SD Harvey, RJ Fellows, et al. 1989. An evaluation of environmental fate behavior of munitions material (TNT, RDX) in soil and plant systems. PNL-7370: AD-A223 5446. US Army Medical Research and Development Command, Fort Detrick, Frederick, MD.
	1380	Longmire, PA, SL Reneau, PM Watt, LD McFadden, JN Gardner, CJ Duffy, and RT Ryti. 1996 (May). Natural Background Geochemistry, Geomorphology, and Pedogenesis of Selected Soil Profiles and Bandelier Tuff, Los Alamos, New Mexico. Los Alamos National Laboratory Report LA-12913-MS. Los Alamos, New Mexico. Pages 21-33
	1487	Newell, PG, and JS Podolsky. 2004. PTSE Methods (Draft). Risk Reduction and Environmental Stewardship Remediation Services, Los Alamos National Laboratory, Los Alamos, New Mexico.
	0001	NOT APPLICABLE
	0001	NOT APPLICABLE

*** Citations for up to 5 additional references associated with this TRV are listed. If the Ref ID for one or more additional references is 0001 that indicates that there are not any or anymore references associated with the TRV.*

Page 4 of 4

Attachment B-1

CS TRV Summary Report Example

TRV Summary Report

Ecorisk Database Release 2.1 (September 2004)

***TRV Summary ID:** 11097-69-1_SOIL_B_TB_ChickenWhiteLeghorn_Diet_ChronicNOAEL_1105_0756

GMM TRV ID:

LANL TRV: YES **Data Source:** LANL derived value based on reviewed primary data

Analyte Name: Aroclor-1254 **Analyte Code:** 11097-69-1 **Analyte Group:** Polychlorinated Biphenyl

ESL Receptor Group: B **Functional Group:** A **ESL Media:** SOIL

Test Chemical Code: 11097-69-1

Test Organism ID: TB **Test Organism Common Name:** Chicken, White Leghorn

Final TRV: Chronic CS NOAEL 0.1 mg/kg/d **Exposure Route** OD

Derivation Notes: The chronic NOAEL of 0.1 with an accompanying chronic LOAEL of 1 was derived from a primary toxicity value (PTV) selected from a data set of 3 references and 8 effects (4 reproduction/development, 2 survival, and 1 growth). Effects considered in the selection included adult and chick mortality, adult and chick body weight, egg production, and hatchability. The PTV chosen for the derivation of the toxicity reference value (TRV) is from Ref ID 0756 and is based on hatchability (Experiment Effect ID (0756_11097-69-1_1A). Mortality in Ref ID 0707 was eliminated from consideration because it was from a study in which only high-dose, relatively short-term (5 day) exposures were evaluated. The other study (Ref ID 0758) reported adverse results (LOAEL) at 2.63 mg/kg/d, and with conversion to NOAEL, this would produce a value of 0.263 mg/kg/d which is close to the value selected for the TRV. The 0.1 mg/kg/d TRV is considered protective of wildlife populations because hatchability is an indicator of the ability of the species to successfully reproduce. Poor reproduction leads to lower success of breeding and less individuals to maintain a viable population. The NOAEL and LOAEL were based on two concentrations (unknown whether they were nominal or empirical) administered.

In this chronic (9 weeks and during a critical life stage) study, Aroclor 1242 was administered orally through food to white leghorn chicken. This test exposure route is related to the exposure route of concern for soil ESLs (food web transfer through consumption of contaminated plants and/or animals and incidental ingestion of soil) because both are oral through the diet. Dose rates were not reported in mg/kg/d, and body weight and food intake data were not available in the primary study; therefore, these parameters had to be obtained from other sources. The moisture basis of the dose is unknown, but will be considered dry weight for conservativism.

Uncertainty: Because the exposure was chronic during a critical life stage and the TRV is based on a no observed adverse effects level, the application of an Uncertainty Factor is unnecessary.

Calculations: N/A

Log Kow: **KocVu:** **Foc:**

Text Last Updated On: 10-Sep-04 **Value Last Updated On:** 28-Sep-01

Confidence Rating: **NMED Concurrence Date:**

** Further details on the study/ effects/ toxicity values reviewed for this TRV are provided in the PTSE Part 1 (Study Details) and 2s (Study Evaluations) and in the Part 3 (TRV Summary) graph.*

Page 1 of 3

TRV Summary Report ***Ecorisk Database Release 2.1 (September 2004)***

***TRV Summary ID:** 11097-69-1_SOIL_B_TB_ChickenWhiteLeghorn_Diet_ChronicNOAEL_1105_0756

GMM TRV ID:

LANL TRV: YES **Data Source:** LANL derived value based on reviewed primary data

Data Set Distribution Comments:

Lowest LOAEL (LOEC) Comparison:

LANL CS TRV Comparison:

ORNL CS TRV Comparison:

USEPA R6 CS TRV Comparison:

SNL CS TRV Comparison:

Page 2 of 3

TRV Summary Report

Ecorisk Database Release 2.1 (September 2004)

***TRV Summary ID:** 11097-69-1_SOIL_B_TB_ChickenWhiteLeghorn_Diet_ChronicNOAEL_1105_0756

GMM TRV ID:

LANL TRV: YES **Data Source:** LANL derived value based on reviewed primary data

REFERENCE LIST	Ref ID	Citation
Primary Toxicity Study Reference CS TRV:	0756	Cecil, HC, J Bitman, RJ Lilie, GF Fries and J Verrett. 1974. Embryotoxic and Teratogenic Effects in Unhatched Fertile Eggs for Hens Fed PCBs. Bull Environ Contam Toxicol 11(6):489-495.
Primary Toxicity Study Reference(s) GMM TRV:	**(NOT APPLICABLE, if no references are listed in this section)**	
TRV reference:	1105	Los Alamos National Laboratory (LANL), 2001 (Sept). ECORISK Database (Release 1.3), ER package #186. Environmental Restoration Project, Los Alamos National Laboratory, Los Alamos, NM.
Additional References:	0707	Hill, EF and MB Camardese. 1986. Lethal Dietary Toxicities of Environmental Contaminants and Pesticides to Coturnix. United States Fish And Wildlife Service: Fish and Wildlife Tech Rep 2 (NTIS PB86-176914). Laurel, MD. 154 pp.
	0758	Dahlgren, RB, RL Linder, and CW Carlson. 1972. Polychlorinated Biphenyls: Their Effects on Penned Pheasants. Environ Health Perspec 1:89-101.
	0001	NOT APPLICABLE
	0001	NOT APPLICABLE
	0001	NOT APPLICABLE

*** Citations for up to 5 additional references associated with this TRV are listed. If the Ref ID for one or more additional references is 0001 that indicates that there are not any or anymore references associated with the TRV.*

Page 3 of 3

Analyte Group	Analyte Name	Analyte Code
Dioxin/ Furan	Tetrachlorodibenzodioxin[2,3,7,8-]	1746-01-6
Dioxin/ Furan	Tetrachlorodibenzodioxin[2,3,7,8-]	1746-01-6
Dioxin/ Furan	Tetrachlorodibenzodioxin[2,3,7,8-]	1746-01-6
Dioxin/ Furan	Tetrachlorodibenzodioxin[2,3,7,8-]	1746-01-6
Dioxin/ Furan	Tetrachlorodibenzodioxin[2,3,7,8-]	1746-01-6
Dioxin/ Furan	Tetrachlorodibenzodioxin[2,3,7,8-]	1746-01-6
Dioxin/ Furan	Tetrachlorodibenzodioxin[2,3,7,8-]	1746-01-6
Dioxin/ Furan	Tetrachlorodibenzodioxin[2,3,7,8-]	1746-01-6
Dioxin/ Furan	Tetrachlorodibenzodioxin[2,3,7,8-]	1746-01-6
Dioxin/ Furan	Tetrachlorodibenzodioxin[2,3,7,8-]	1746-01-6
Dioxin/ Furan	Tetrachlorodibenzodioxin[2,3,7,8-]	1746-01-6
Dioxin/ Furan	Tetrachlorodibenzodioxin[2,3,7,8-]	1746-01-6
Dioxin/ Furan	Tetrachlorodibenzodioxin[2,3,7,8-]	1746-01-6
High Explosive	Amino-2,6-dinitrotoluene[4-]	19406-51-0
High Explosive	Amino-2,6-dinitrotoluene[4-]	19406-51-0
High Explosive	Amino-2,6-dinitrotoluene[4-]	19406-51-0
High Explosive	Amino-2,6-dinitrotoluene[4-]	19406-51-0
High Explosive	Amino-2,6-dinitrotoluene[4-]	19406-51-0
High Explosive	Amino-2,6-dinitrotoluene[4-]	19406-51-0
High Explosive	Amino-2,6-dinitrotoluene[4-]	19406-51-0
High Explosive	Amino-2,6-dinitrotoluene[4-]	19406-51-0
High Explosive	Amino-2,6-dinitrotoluene[4-]	19406-51-0
High Explosive	Amino-2,6-dinitrotoluene[4-]	19406-51-0
High Explosive	Amino-2,6-dinitrotoluene[4-]	19406-51-0
High Explosive	Amino-4,6-dinitrotoluene[2-]	35572-78-2
High Explosive	Amino-4,6-dinitrotoluene[2-]	35572-78-2
High Explosive	Amino-4,6-dinitrotoluene[2-]	35572-78-2
High Explosive	Amino-4,6-dinitrotoluene[2-]	35572-78-2
High Explosive	Amino-4,6-dinitrotoluene[2-]	35572-78-2
High Explosive	Amino-4,6-dinitrotoluene[2-]	35572-78-2
High Explosive	Amino-4,6-dinitrotoluene[2-]	35572-78-2
High Explosive	Amino-4,6-dinitrotoluene[2-]	35572-78-2
High Explosive	Amino-4,6-dinitrotoluene[2-]	35572-78-2
High Explosive	Amino-4,6-dinitrotoluene[2-]	35572-78-2
High Explosive	Amino-4,6-dinitrotoluene[2-]	35572-78-2
High Explosive	Dinitrobenzene[1,3-]	99-65-0
High Explosive	Dinitrobenzene[1,3-]	99-65-0
High Explosive	Dinitrobenzene[1,3-]	99-65-0
High Explosive	Dinitrobenzene[1,3-]	99-65-0
High Explosive	Dinitrobenzene[1,3-]	99-65-0
High Explosive	Dinitrobenzene[1,3-]	99-65-0
High Explosive	Dinitrobenzene[1,3-]	99-65-0
High Explosive	Dinitrobenzene[1,3-]	99-65-0
High Explosive	Dinitrobenzene[1,3-]	99-65-0

High Explosive	Dinitrobenzene[1,3-]	99-65-0
High Explosive	Dinitrobenzene[1,3-]	99-65-0
High Explosive	Dinitrobenzene[1,3-]	99-65-0
High Explosive	Dinitrobenzene[1,3-]	99-65-0
High Explosive	Dinitrobenzene[1,3-]	99-65-0
High Explosive	Dinitrobenzene[1,3-]	99-65-0
High Explosive	Dinitrobenzene[1,3-]	99-65-0
High Explosive	Dinitrobenzene[1,3-]	99-65-0
High Explosive	Dinitrobenzene[1,3-]	99-65-0
High Explosive	Dinitrobenzene[1,3-]	99-65-0
High Explosive	Dinitrobenzene[1,3-]	99-65-0
High Explosive	Dinitrotoluene[2,4-]	121-14-2
High Explosive	Dinitrotoluene[2,4-]	121-14-2
High Explosive	Dinitrotoluene[2,4-]	121-14-2
High Explosive	Dinitrotoluene[2,4-]	121-14-2
High Explosive	Dinitrotoluene[2,4-]	121-14-2
High Explosive	Dinitrotoluene[2,4-]	121-14-2
High Explosive	Dinitrotoluene[2,4-]	121-14-2
High Explosive	Dinitrotoluene[2,4-]	121-14-2
High Explosive	Dinitrotoluene[2,4-]	121-14-2
High Explosive	Dinitrotoluene[2,4-]	121-14-2
High Explosive	Dinitrotoluene[2,4-]	121-14-2
High Explosive	Dinitrotoluene[2,4-]	121-14-2
High Explosive	Dinitrotoluene[2,6-]	606-20-2
High Explosive	Dinitrotoluene[2,6-]	606-20-2
High Explosive	Dinitrotoluene[2,6-]	606-20-2
High Explosive	Dinitrotoluene[2,6-]	606-20-2
High Explosive	Dinitrotoluene[2,6-]	606-20-2
High Explosive	Dinitrotoluene[2,6-]	606-20-2
High Explosive	Dinitrotoluene[2,6-]	606-20-2
High Explosive	Dinitrotoluene[2,6-]	606-20-2
High Explosive	Dinitrotoluene[2,6-]	606-20-2
High Explosive	Dinitrotoluene[2,6-]	606-20-2
High Explosive	Dinitrotoluene[2,6-]	606-20-2
High Explosive	HMX	2691-41-0
High Explosive	HMX	2691-41-0
High Explosive	HMX	2691-41-0
High Explosive	HMX	2691-41-0
High Explosive	HMX	2691-41-0
High Explosive	HMX	2691-41-0
High Explosive	HMX	2691-41-0
High Explosive	HMX	2691-41-0
High Explosive	HMX	2691-41-0
High Explosive	HMX	2691-41-0
High Explosive	HMX	2691-41-0
High Explosive	HMX	2691-41-0
High Explosive	Nitroglycerine	55-63-0

High Explosive	Nitroglycerine	55-63-0
High Explosive	Nitroglycerine	55-63-0
High Explosive	Nitroglycerine	55-63-0
High Explosive	Nitroglycerine	55-63-0
High Explosive	Nitroglycerine	55-63-0
High Explosive	Nitroglycerine	55-63-0
High Explosive	Nitroglycerine	55-63-0
High Explosive	Nitroglycerine	55-63-0
High Explosive	Nitroglycerine	55-63-0
High Explosive	Nitrotoluene[2-]	88-72-2
High Explosive	Nitrotoluene[2-]	88-72-2
High Explosive	Nitrotoluene[2-]	88-72-2
High Explosive	Nitrotoluene[2-]	88-72-2
High Explosive	Nitrotoluene[2-]	88-72-2
High Explosive	Nitrotoluene[2-]	88-72-2
High Explosive	Nitrotoluene[2-]	88-72-2
High Explosive	Nitrotoluene[2-]	88-72-2
High Explosive	Nitrotoluene[2-]	88-72-2
High Explosive	Nitrotoluene[2-]	88-72-2
High Explosive	Nitrotoluene[3-]	99-08-1
High Explosive	Nitrotoluene[3-]	99-08-1
High Explosive	Nitrotoluene[3-]	99-08-1
High Explosive	Nitrotoluene[3-]	99-08-1
High Explosive	Nitrotoluene[3-]	99-08-1
High Explosive	Nitrotoluene[3-]	99-08-1
High Explosive	Nitrotoluene[3-]	99-08-1
High Explosive	Nitrotoluene[3-]	99-08-1
High Explosive	Nitrotoluene[3-]	99-08-1
High Explosive	Nitrotoluene[3-]	99-08-1
High Explosive	Nitrotoluene[4-]	99-99-0
High Explosive	Nitrotoluene[4-]	99-99-0
High Explosive	Nitrotoluene[4-]	99-99-0
High Explosive	Nitrotoluene[4-]	99-99-0
High Explosive	Nitrotoluene[4-]	99-99-0
High Explosive	Nitrotoluene[4-]	99-99-0
High Explosive	Nitrotoluene[4-]	99-99-0
High Explosive	Nitrotoluene[4-]	99-99-0
High Explosive	Nitrotoluene[4-]	99-99-0
High Explosive	Nitrotoluene[4-]	99-99-0
High Explosive	PETN	78-11-5
High Explosive	PETN	78-11-5
High Explosive	PETN	78-11-5
High Explosive	PETN	78-11-5
High Explosive	PETN	78-11-5
High Explosive	PETN	78-11-5
High Explosive	PETN	78-11-5
High Explosive	PETN	78-11-5

High Explosive	PETN	78-11-5
High Explosive	PETN	78-11-5
High Explosive	RDX	121-82-4
High Explosive	RDX	121-82-4
High Explosive	RDX	121-82-4
High Explosive	RDX	121-82-4
High Explosive	RDX	121-82-4
High Explosive	RDX	121-82-4
High Explosive	RDX	121-82-4
High Explosive	RDX	121-82-4
High Explosive	RDX	121-82-4
High Explosive	RDX	121-82-4
High Explosive	RDX	121-82-4
High Explosive	RDX	121-82-4
High Explosive	RDX	121-82-4
High Explosive	RDX	121-82-4
High Explosive	RDX	121-82-4
High Explosive	RDX	121-82-4
High Explosive	RDX	121-82-4
High Explosive	Tetryl	479-45-8
High Explosive	Tetryl	479-45-8
High Explosive	Tetryl	479-45-8
High Explosive	Tetryl	479-45-8
High Explosive	Tetryl	479-45-8
High Explosive	Tetryl	479-45-8
High Explosive	Tetryl	479-45-8
High Explosive	Tetryl	479-45-8
High Explosive	Tetryl	479-45-8
High Explosive	Tetryl	479-45-8
High Explosive	Trinitrobenzene[1,3,5-]	99-35-4
High Explosive	Trinitrobenzene[1,3,5-]	99-35-4
High Explosive	Trinitrobenzene[1,3,5-]	99-35-4
High Explosive	Trinitrobenzene[1,3,5-]	99-35-4
High Explosive	Trinitrobenzene[1,3,5-]	99-35-4
High Explosive	Trinitrobenzene[1,3,5-]	99-35-4
High Explosive	Trinitrobenzene[1,3,5-]	99-35-4
High Explosive	Trinitrobenzene[1,3,5-]	99-35-4
High Explosive	Trinitrobenzene[1,3,5-]	99-35-4
High Explosive	Trinitrotoluene[2,4,6-]	118-96-7
High Explosive	Trinitrotoluene[2,4,6-]	118-96-7
High Explosive	Trinitrotoluene[2,4,6-]	118-96-7
High Explosive	Trinitrotoluene[2,4,6-]	118-96-7
High Explosive	Trinitrotoluene[2,4,6-]	118-96-7
High Explosive	Trinitrotoluene[2,4,6-]	118-96-7
High Explosive	Trinitrotoluene[2,4,6-]	118-96-7
High Explosive	Trinitrotoluene[2,4,6-]	118-96-7

High Explosive	Trinitrotoluene[2,4,6-]	118-96-7
High Explosive	Trinitrotoluene[2,4,6-]	118-96-7
High Explosive	Trinitrotoluene[2,4,6-]	118-96-7
High Explosive	Trinitrotoluene[2,4,6-]	118-96-7
High Explosive	Trinitrotoluene[2,4,6-]	118-96-7
High Explosive	Trinitrotoluene[2,4,6-]	118-96-7
High Explosive	Trinitrotoluene[2,4,6-]	118-96-7
High Explosive	Trinitrotoluene[2,4,6-]	118-96-7
High Explosive	Trinitrotoluene[2,4,6-]	118-96-7
High Explosive	Trinitrotoluene[2,4,6-]	118-96-7
High Explosive	Trinitrotoluene[2,4,6-]	118-96-7
High Explosive	Trinitrotoluene[2,4,6-]	118-96-7
High Explosive	Trinitrotoluene[2,4,6-]	118-96-7
Inorganic Compound	Aluminum	AL
Inorganic Compound	Aluminum	AL
Inorganic Compound	Aluminum	AL
Inorganic Compound	Aluminum	AL
Inorganic Compound	Aluminum	AL
Inorganic Compound	Aluminum	AL
Inorganic Compound	Aluminum	AL
Inorganic Compound	Aluminum	AL
Inorganic Compound	Aluminum	AL
Inorganic Compound	Aluminum	AL
Inorganic Compound	Aluminum	AL
Inorganic Compound	Aluminum	AL
Inorganic Compound	Aluminum	AL
Inorganic Compound	Aluminum	AL
Inorganic Compound	Aluminum	AL
Inorganic Compound	Aluminum	AL
Inorganic Compound	Aluminum	AL
Inorganic Compound	Aluminum	AL
Inorganic Compound	Aluminum	AL
Inorganic Compound	Aluminum	AL

Inorganic Compound	Aluminum	AL
Inorganic Compound	Aluminum	AL
Inorganic Compound	Antimony	SB
Inorganic Compound	Antimony	SB
Inorganic Compound	Antimony	SB
Inorganic Compound	Antimony	SB
Inorganic Compound	Antimony	SB
Inorganic Compound	Antimony	SB
Inorganic Compound	Antimony	SB
Inorganic Compound	Antimony	SB
Inorganic Compound	Antimony	SB
Inorganic Compound	Antimony	SB
Inorganic Compound	Antimony	SB
Inorganic Compound	Antimony	SB
Inorganic Compound	Antimony	SB
Inorganic Compound	Arsenic	AS
Inorganic Compound	Arsenic	AS
Inorganic Compound	Arsenic	AS
Inorganic Compound	Arsenic	AS
Inorganic Compound	Arsenic	AS
Inorganic Compound	Arsenic	AS
Inorganic Compound	Arsenic	AS
Inorganic Compound	Arsenic	AS
Inorganic Compound	Arsenic	AS
Inorganic Compound	Arsenic	AS
Inorganic Compound	Arsenic	AS
Inorganic Compound	Arsenic	AS
Inorganic Compound	Arsenic	AS
Inorganic Compound	Arsenic	AS
Inorganic Compound	Arsenic	AS
Inorganic Compound	Arsenic	AS
Inorganic Compound	Arsenic	AS
Inorganic Compound	Arsenic	AS
Inorganic Compound	Arsenic	AS
Inorganic Compound	Arsenic	AS
Inorganic Compound	Arsenic	AS
Inorganic Compound	Arsenic	AS
Inorganic Compound	Barium	BA
Inorganic Compound	Barium	BA
Inorganic Compound	Barium	BA
Inorganic Compound	Barium	BA
Inorganic Compound	Barium	BA
Inorganic Compound	Barium	BA
Inorganic Compound	Barium	BA
Inorganic Compound	Barium	BA

Inorganic Compound	Barium	BA
Inorganic Compound	Barium	BA
Inorganic Compound	Barium	BA
Inorganic Compound	Barium	BA
Inorganic Compound	Barium	BA
Inorganic Compound	Barium	BA
Inorganic Compound	Barium	BA
Inorganic Compound	Barium	BA
Inorganic Compound	Barium	BA
Inorganic Compound	Barium	BA
Inorganic Compound	Barium	BA
Inorganic Compound	Barium	BA
Inorganic Compound	Barium	BA
Inorganic Compound	Barium	BA
Inorganic Compound	Barium	BA
Inorganic Compound	Beryllium	BE
Inorganic Compound	Beryllium	BE
Inorganic Compound	Beryllium	BE
Inorganic Compound	Beryllium	BE
Inorganic Compound	Beryllium	BE
Inorganic Compound	Beryllium	BE
Inorganic Compound	Beryllium	BE
Inorganic Compound	Beryllium	BE
Inorganic Compound	Beryllium	BE
Inorganic Compound	Beryllium	BE
Inorganic Compound	Beryllium	BE
Inorganic Compound	Beryllium	BE
Inorganic Compound	Boron	B
Inorganic Compound	Boron	B
Inorganic Compound	Boron	B
Inorganic Compound	Boron	B
Inorganic Compound	Boron	B
Inorganic Compound	Boron	B
Inorganic Compound	Boron	B
Inorganic Compound	Boron	B
Inorganic Compound	Boron	B
Inorganic Compound	Boron	B
Inorganic Compound	Boron	B
Inorganic Compound	Boron	B
Inorganic Compound	Boron	B
Inorganic Compound	Boron	B
Inorganic Compound	Boron	B
Inorganic Compound	Boron	B
Inorganic Compound	Boron	B
Inorganic Compound	Boron	B
Inorganic Compound	Boron	B

Inorganic Compound	Boron	B
Inorganic Compound	Boron	B
Inorganic Compound	Cadmium	CD
Inorganic Compound	Cadmium	CD
Inorganic Compound	Cadmium	CD
Inorganic Compound	Cadmium	CD
Inorganic Compound	Cadmium	CD
Inorganic Compound	Cadmium	CD
Inorganic Compound	Cadmium	CD
Inorganic Compound	Cadmium	CD
Inorganic Compound	Cadmium	CD
Inorganic Compound	Cadmium	CD
Inorganic Compound	Cadmium	CD
Inorganic Compound	Cadmium	CD
Inorganic Compound	Cadmium	CD
Inorganic Compound	Cadmium	CD
Inorganic Compound	Cadmium	CD
Inorganic Compound	Cadmium	CD
Inorganic Compound	Cadmium	CD
Inorganic Compound	Cadmium	CD
Inorganic Compound	Cadmium	CD
Inorganic Compound	Cadmium	CD
Inorganic Compound	Cadmium	CD
Inorganic Compound	Cadmium	CD
Inorganic Compound	Chloride	CL(-1)
Inorganic Compound	Chromium (total)	CR
Inorganic Compound	Chromium (total)	CR
Inorganic Compound	Chromium (total)	CR
Inorganic Compound	Chromium (total)	CR
Inorganic Compound	Chromium (total)	CR
Inorganic Compound	Chromium (total)	CR
Inorganic Compound	Chromium (total)	CR
Inorganic Compound	Chromium (total)	CR
Inorganic Compound	Chromium (total)	CR
Inorganic Compound	Chromium (total)	CR
Inorganic Compound	Chromium (total)	CR
Inorganic Compound	Chromium (total)	CR
Inorganic Compound	Chromium (total)	CR
Inorganic Compound	Chromium (total)	CR
Inorganic Compound	Chromium (total)	CR
Inorganic Compound	Chromium (total)	CR
Inorganic Compound	Chromium (total)	CR
Inorganic Compound	Chromium (total)	CR
Inorganic Compound	Chromium (total)	CR
Inorganic Compound	Chromium (total)	CR
Inorganic Compound	Chromium (total)	CR

Inorganic Compound	Chromium(+6)	CR(+6)
Inorganic Compound	Chromium(+6)	CR(+6)
Inorganic Compound	Chromium(+6)	CR(+6)
Inorganic Compound	Chromium(+6)	CR(+6)
Inorganic Compound	Chromium(+6)	CR(+6)
Inorganic Compound	Chromium(+6)	CR(+6)
Inorganic Compound	Chromium(+6)	CR(+6)
Inorganic Compound	Chromium(+6)	CR(+6)
Inorganic Compound	Chromium(+6)	CR(+6)
Inorganic Compound	Chromium(+6)	CR(+6)
Inorganic Compound	Chromium(+6)	CR(+6)
Inorganic Compound	Chromium(+6)	CR(+6)
Inorganic Compound	Chromium(+6)	CR(+6)
Inorganic Compound	Chromium(+6)	CR(+6)
Inorganic Compound	Chromium(+6)	CR(+6)
Inorganic Compound	Chromium(+6)	CR(+6)
Inorganic Compound	Chromium(+6)	CR(+6)
Inorganic Compound	Chromium(+6)	CR(+6)
Inorganic Compound	Chromium(+6)	CR(+6)
Inorganic Compound	Chromium(+6)	CR(+6)
Inorganic Compound	Chromium(+6)	CR(+6)
Inorganic Compound	Chromium(+6)	CR(+6)
Inorganic Compound	Cobalt	CO
Inorganic Compound	Cobalt	CO
Inorganic Compound	Cobalt	CO
Inorganic Compound	Cobalt	CO
Inorganic Compound	Cobalt	CO
Inorganic Compound	Cobalt	CO
Inorganic Compound	Cobalt	CO
Inorganic Compound	Cobalt	CO
Inorganic Compound	Cobalt	CO
Inorganic Compound	Cobalt	CO
Inorganic Compound	Cobalt	CO
Inorganic Compound	Cobalt	CO
Inorganic Compound	Cobalt	CO
Inorganic Compound	Cobalt	CO
Inorganic Compound	Cobalt	CO
Inorganic Compound	Cobalt	CO
Inorganic Compound	Cobalt	CO
Inorganic Compound	Cobalt	CO
Inorganic Compound	Cobalt	CO
Inorganic Compound	Cobalt	CO
Inorganic Compound	Copper	CU
Inorganic Compound	Copper	CU
Inorganic Compound	Copper	CU
Inorganic Compound	Copper	CU

Inorganic Compound	Copper	CU
Inorganic Compound	Copper	CU
Inorganic Compound	Copper	CU
Inorganic Compound	Copper	CU
Inorganic Compound	Copper	CU
Inorganic Compound	Copper	CU
Inorganic Compound	Copper	CU
Inorganic Compound	Copper	CU
Inorganic Compound	Copper	CU
Inorganic Compound	Copper	CU
Inorganic Compound	Copper	CU
Inorganic Compound	Copper	CU
Inorganic Compound	Copper	CU
Inorganic Compound	Copper	CU
Inorganic Compound	Copper	CU
Inorganic Compound	Copper	CU
Inorganic Compound	Copper	CU
Inorganic Compound	Copper	CU
Inorganic Compound	Cyanide (total)	CN(-1)
Inorganic Compound	Cyanide (total)	CN(-1)
Inorganic Compound	Cyanide (total)	CN(-1)
Inorganic Compound	Cyanide (total)	CN(-1)
Inorganic Compound	Cyanide (total)	CN(-1)
Inorganic Compound	Cyanide (total)	CN(-1)
Inorganic Compound	Cyanide (total)	CN(-1)
Inorganic Compound	Cyanide (total)	CN(-1)
Inorganic Compound	Cyanide (total)	CN(-1)
Inorganic Compound	Cyanide (total)	CN(-1)
Inorganic Compound	Cyanide (total)	CN(-1)
Inorganic Compound	Cyanide (total)	CN(-1)
Inorganic Compound	Cyanide (total)	CN(-1)
Inorganic Compound	Cyanide (total)	CN(-1)
Inorganic Compound	Cyanide (total)	CN(-1)
Inorganic Compound	Cyanide (total)	CN(-1)
Inorganic Compound	Cyanide (total)	CN(-1)
Inorganic Compound	Cyanide (total)	CN(-1)
Inorganic Compound	Cyanide (total)	CN(-1)
Inorganic Compound	Fluoride	F(-1)
Inorganic Compound	Fluoride	F(-1)
Inorganic Compound	Fluoride	F(-1)
Inorganic Compound	Fluoride	F(-1)
Inorganic Compound	Fluoride	F(-1)
Inorganic Compound	Fluoride	F(-1)
Inorganic Compound	Fluoride	F(-1)

Inorganic Compound	Fluoride	F(-1)
Inorganic Compound	Fluoride	F(-1)
Inorganic Compound	Fluoride	F(-1)
Inorganic Compound	Fluoride	F(-1)
Inorganic Compound	Fluoride	F(-1)
Inorganic Compound	Fluoride	F(-1)
Inorganic Compound	Fluoride	F(-1)
Inorganic Compound	Fluoride	F(-1)
Inorganic Compound	Fluoride	F(-1)
Inorganic Compound	Fluoride	F(-1)
Inorganic Compound	Fluoride	F(-1)
Inorganic Compound	Fluoride	F(-1)
Inorganic Compound	Fluoride	F(-1)
Inorganic Compound	Iron	FE
Inorganic Compound	Iron	FE
Inorganic Compound	Lead	PB
Inorganic Compound	Lead	PB
Inorganic Compound	Lead	PB
Inorganic Compound	Lead	PB
Inorganic Compound	Lead	PB
Inorganic Compound	Lead	PB
Inorganic Compound	Lead	PB
Inorganic Compound	Lead	PB
Inorganic Compound	Lead	PB
Inorganic Compound	Lead	PB
Inorganic Compound	Lead	PB
Inorganic Compound	Lead	PB
Inorganic Compound	Lead	PB
Inorganic Compound	Lead	PB
Inorganic Compound	Lead	PB
Inorganic Compound	Lead	PB
Inorganic Compound	Lead	PB
Inorganic Compound	Lead	PB
Inorganic Compound	Lead	PB
Inorganic Compound	Lead	PB
Inorganic Compound	Lead	PB
Inorganic Compound	Lithium	LI
Inorganic Compound	Lithium	LI
Inorganic Compound	Lithium	LI
Inorganic Compound	Lithium	LI
Inorganic Compound	Lithium	LI
Inorganic Compound	Manganese	MN
Inorganic Compound	Manganese	MN
Inorganic Compound	Manganese	MN
Inorganic Compound	Manganese	MN

Inorganic Compound	Manganese	MN
Inorganic Compound	Manganese	MN
Inorganic Compound	Manganese	MN
Inorganic Compound	Manganese	MN
Inorganic Compound	Manganese	MN
Inorganic Compound	Manganese	MN
Inorganic Compound	Manganese	MN
Inorganic Compound	Manganese	MN
Inorganic Compound	Manganese	MN
Inorganic Compound	Manganese	MN
Inorganic Compound	Manganese	MN
Inorganic Compound	Manganese	MN
Inorganic Compound	Manganese	MN
Inorganic Compound	Manganese	MN
Inorganic Compound	Manganese	MN
Inorganic Compound	Manganese	MN
Inorganic Compound	Manganese	MN
Inorganic Compound	Manganese	MN
Inorganic Compound	Mercury (inorganic)	HGI
Inorganic Compound	Mercury (inorganic)	HGI
Inorganic Compound	Mercury (inorganic)	HGI
Inorganic Compound	Mercury (inorganic)	HGI
Inorganic Compound	Mercury (inorganic)	HGI
Inorganic Compound	Mercury (inorganic)	HGI
Inorganic Compound	Mercury (inorganic)	HGI
Inorganic Compound	Mercury (inorganic)	HGI
Inorganic Compound	Mercury (inorganic)	HGI
Inorganic Compound	Mercury (inorganic)	HGI
Inorganic Compound	Mercury (inorganic)	HGI
Inorganic Compound	Mercury (inorganic)	HGI
Inorganic Compound	Mercury (inorganic)	HGI
Inorganic Compound	Mercury (inorganic)	HGI
Inorganic Compound	Mercury (inorganic)	HGI
Inorganic Compound	Mercury (inorganic)	HGI
Inorganic Compound	Mercury (inorganic)	HGI
Inorganic Compound	Mercury (inorganic)	HGI
Inorganic Compound	Mercury (inorganic)	HGI
Inorganic Compound	Mercury (inorganic)	HGI
Inorganic Compound	Mercury (inorganic)	HGI
Inorganic Compound	Mercury (inorganic)	HGI
Inorganic Compound	Mercury (inorganic)	HGI
Inorganic Compound	Mercury (methyl)	HGM
Inorganic Compound	Mercury (methyl)	HGM
Inorganic Compound	Mercury (methyl)	HGM
Inorganic Compound	Mercury (methyl)	HGM
Inorganic Compound	Mercury (methyl)	HGM

Inorganic Compound	Mercury (methyl)	HGM
Inorganic Compound	Mercury (methyl)	HGM
Inorganic Compound	Mercury (methyl)	HGM
Inorganic Compound	Mercury (methyl)	HGM
Inorganic Compound	Mercury (methyl)	HGM
Inorganic Compound	Mercury (methyl)	HGM
Inorganic Compound	Mercury (methyl)	HGM
Inorganic Compound	Mercury (methyl)	HGM
Inorganic Compound	Mercury (methyl)	HGM
Inorganic Compound	Mercury (methyl)	HGM
Inorganic Compound	Mercury (methyl)	HGM
Inorganic Compound	Mercury (methyl)	HGM
Inorganic Compound	Mercury (methyl)	HGM
Inorganic Compound	Mercury (methyl)	HGM
Inorganic Compound	Mercury (methyl)	HGM
Inorganic Compound	Mercury (methyl)	HGM
Inorganic Compound	Molybdenum	MO
Inorganic Compound	Molybdenum	MO
Inorganic Compound	Molybdenum	MO
Inorganic Compound	Molybdenum	MO
Inorganic Compound	Molybdenum	MO
Inorganic Compound	Molybdenum	MO
Inorganic Compound	Molybdenum	MO
Inorganic Compound	Nickel	NI
Inorganic Compound	Nickel	NI
Inorganic Compound	Nickel	NI
Inorganic Compound	Nickel	NI
Inorganic Compound	Nickel	NI
Inorganic Compound	Nickel	NI
Inorganic Compound	Nickel	NI
Inorganic Compound	Nickel	NI
Inorganic Compound	Nickel	NI
Inorganic Compound	Nickel	NI
Inorganic Compound	Nickel	NI
Inorganic Compound	Nickel	NI
Inorganic Compound	Nickel	NI
Inorganic Compound	Nickel	NI
Inorganic Compound	Nickel	NI
Inorganic Compound	Nickel	NI
Inorganic Compound	Nickel	NI
Inorganic Compound	Nickel	NI
Inorganic Compound	Nickel	NI
Inorganic Compound	Nickel	NI
Inorganic Compound	Nickel	NI
Inorganic Compound	Nickel	NI
Inorganic Compound	Perchlorate Ion	ClO4(-1)

Inorganic Compound	Perchlorate Ion	ClO4(-1)
Inorganic Compound	Perchlorate Ion	ClO4(-1)
Inorganic Compound	Perchlorate Ion	ClO4(-1)
Inorganic Compound	Perchlorate Ion	ClO4(-1)
Inorganic Compound	Perchlorate Ion	ClO4(-1)
Inorganic Compound	Perchlorate Ion	ClO4(-1)
Inorganic Compound	Perchlorate Ion	ClO4(-1)
Inorganic Compound	Selenium	SE
Inorganic Compound	Selenium	SE
Inorganic Compound	Selenium	SE
Inorganic Compound	Selenium	SE
Inorganic Compound	Selenium	SE
Inorganic Compound	Selenium	SE
Inorganic Compound	Selenium	SE
Inorganic Compound	Selenium	SE
Inorganic Compound	Selenium	SE
Inorganic Compound	Selenium	SE
Inorganic Compound	Selenium	SE
Inorganic Compound	Selenium	SE
Inorganic Compound	Selenium	SE
Inorganic Compound	Selenium	SE
Inorganic Compound	Selenium	SE
Inorganic Compound	Selenium	SE
Inorganic Compound	Selenium	SE
Inorganic Compound	Selenium	SE
Inorganic Compound	Selenium	SE
Inorganic Compound	Selenium	SE
Inorganic Compound	Selenium	SE
Inorganic Compound	Selenium	SE
Inorganic Compound	Silver	AG
Inorganic Compound	Silver	AG
Inorganic Compound	Silver	AG
Inorganic Compound	Silver	AG
Inorganic Compound	Silver	AG
Inorganic Compound	Silver	AG
Inorganic Compound	Silver	AG
Inorganic Compound	Silver	AG
Inorganic Compound	Silver	AG
Inorganic Compound	Silver	AG
Inorganic Compound	Silver	AG
Inorganic Compound	Silver	AG
Inorganic Compound	Silver	AG
Inorganic Compound	Silver	AG
Inorganic Compound	Silver	AG
Inorganic Compound	Silver	AG
Inorganic Compound	Silver	AG

Inorganic Compound	Silver	AG
Inorganic Compound	Silver	AG
Inorganic Compound	Silver	AG
Inorganic Compound	Silver	AG
Inorganic Compound	Silver	AG
Inorganic Compound	Strontium (stable)	SR
Inorganic Compound	Strontium (stable)	SR
Inorganic Compound	Strontium (stable)	SR
Inorganic Compound	Strontium (stable)	SR
Inorganic Compound	Strontium (stable)	SR
Inorganic Compound	Strontium (stable)	SR
Inorganic Compound	Strontium (stable)	SR
Inorganic Compound	Strontium (stable)	SR
Inorganic Compound	Strontium (stable)	SR
Inorganic Compound	Strontium (stable)	SR
Inorganic Compound	Strontium (stable)	SR
Inorganic Compound	Thallium	TL
Inorganic Compound	Thallium	TL
Inorganic Compound	Thallium	TL
Inorganic Compound	Thallium	TL
Inorganic Compound	Thallium	TL
Inorganic Compound	Thallium	TL
Inorganic Compound	Thallium	TL
Inorganic Compound	Thallium	TL
Inorganic Compound	Thallium	TL
Inorganic Compound	Thallium	TL
Inorganic Compound	Thallium	TL
Inorganic Compound	Thallium	TL
Inorganic Compound	Thallium	TL
Inorganic Compound	Thallium	TL
Inorganic Compound	Thallium	TL
Inorganic Compound	Thallium	TL
Inorganic Compound	Thallium	TL
Inorganic Compound	Thallium	TL
Inorganic Compound	Thallium	TL
Inorganic Compound	Thallium	TL
Inorganic Compound	Thallium	TL
Inorganic Compound	Titanium	TI
Inorganic Compound	Titanium	TI
Inorganic Compound	Titanium	TI
Inorganic Compound	Titanium	TI
Inorganic Compound	Titanium	TI
Inorganic Compound	Titanium	TI
Inorganic Compound	Titanium	TI
Inorganic Compound	Titanium	TI
Inorganic Compound	Titanium	TI
Inorganic Compound	Titanium	TI

Inorganic Compound	Uranium	U
Inorganic Compound	Uranium	U
Inorganic Compound	Uranium	U
Inorganic Compound	Uranium	U
Inorganic Compound	Uranium	U
Inorganic Compound	Uranium	U
Inorganic Compound	Uranium	U
Inorganic Compound	Uranium	U
Inorganic Compound	Uranium	U
Inorganic Compound	Uranium	U
Inorganic Compound	Uranium	U
Inorganic Compound	Uranium	U
Inorganic Compound	Uranium	U
Inorganic Compound	Uranium	U
Inorganic Compound	Uranium	U
Inorganic Compound	Uranium	U
Inorganic Compound	Uranium	U
Inorganic Compound	Uranium	U
Inorganic Compound	Uranium	U
Inorganic Compound	Uranium	U
Inorganic Compound	Uranium	U
Inorganic Compound	Uranium	U
Inorganic Compound	Vanadium	V
Inorganic Compound	Vanadium	V
Inorganic Compound	Vanadium	V
Inorganic Compound	Vanadium	V
Inorganic Compound	Vanadium	V
Inorganic Compound	Vanadium	V
Inorganic Compound	Vanadium	V
Inorganic Compound	Vanadium	V
Inorganic Compound	Vanadium	V
Inorganic Compound	Vanadium	V
Inorganic Compound	Vanadium	V
Inorganic Compound	Vanadium	V
Inorganic Compound	Vanadium	V
Inorganic Compound	Vanadium	V
Inorganic Compound	Vanadium	V
Inorganic Compound	Vanadium	V
Inorganic Compound	Vanadium	V
Inorganic Compound	Vanadium	V
Inorganic Compound	Vanadium	V
Inorganic Compound	Vanadium	V
Inorganic Compound	Vanadium	V
Inorganic Compound	Zinc	ZN
Inorganic Compound	Zinc	ZN
Inorganic Compound	Zinc	ZN
Inorganic Compound	Zinc	ZN

Inorganic Compound	Zinc	ZN
Inorganic Compound	Zinc	ZN
Inorganic Compound	Zinc	ZN
Inorganic Compound	Zinc	ZN
Inorganic Compound	Zinc	ZN
Inorganic Compound	Zinc	ZN
Inorganic Compound	Zinc	ZN
Inorganic Compound	Zinc	ZN
Inorganic Compound	Zinc	ZN
Inorganic Compound	Zinc	ZN
Inorganic Compound	Zinc	ZN
Inorganic Compound	Zinc	ZN
Inorganic Compound	Zinc	ZN
Inorganic Compound	Zinc	ZN
Inorganic Compound	Zinc	ZN
Inorganic Compound	Zinc	ZN
Inorganic Compound	Zinc	ZN
Inorganic Compound	Zinc	ZN
Inorganic Compound	Zinc	ZN
Pesticide	Aldrin	309-00-2
Pesticide	Aldrin	309-00-2
Pesticide	Aldrin	309-00-2
Pesticide	Aldrin	309-00-2
Pesticide	Aldrin	309-00-2
Pesticide	BHC[alpha-]	319-84-6
Pesticide	BHC[alpha-]	319-84-6
Pesticide	BHC[alpha-]	319-84-6
Pesticide	BHC[alpha-]	319-84-6
Pesticide	BHC[alpha-]	319-84-6
Pesticide	BHC[beta-]	319-85-7
Pesticide	BHC[beta-]	319-85-7
Pesticide	BHC[beta-]	319-85-7
Pesticide	BHC[beta-]	319-85-7
Pesticide	BHC[beta-]	319-85-7
Pesticide	BHC[beta-]	319-85-7
Pesticide	BHC[beta-]	319-85-7
Pesticide	BHC[beta-]	319-85-7
Pesticide	BHC[beta-]	319-85-7
Pesticide	BHC[beta-]	319-85-7
Pesticide	BHC[beta-]	319-85-7
Pesticide	BHC[beta-]	319-85-7
Pesticide	BHC[beta-]	319-85-7
Pesticide	BHC[beta-]	319-85-7
Pesticide	BHC[beta-]	319-85-7
Pesticide	BHC[beta-]	319-85-7
Pesticide	BHC[beta-]	319-85-7
Pesticide	BHC[beta-]	319-85-7

Pesticide	BHC[beta-]	319-85-7
Pesticide	BHC[beta-]	319-85-7
Pesticide	BHC[beta-]	319-85-7
Pesticide	BHC[gamma-]	58-89-9
Pesticide	BHC[gamma-]	58-89-9
Pesticide	BHC[gamma-]	58-89-9
Pesticide	BHC[gamma-]	58-89-9
Pesticide	BHC[gamma-]	58-89-9
Pesticide	BHC[gamma-]	58-89-9
Pesticide	BHC[gamma-]	58-89-9
Pesticide	BHC[gamma-]	58-89-9
Pesticide	BHC[gamma-]	58-89-9
Pesticide	BHC[gamma-]	58-89-9
Pesticide	BHC[gamma-]	58-89-9
Pesticide	BHC[gamma-]	58-89-9
Pesticide	BHC[gamma-]	58-89-9
Pesticide	BHC[gamma-]	58-89-9
Pesticide	BHC[gamma-]	58-89-9
Pesticide	BHC[gamma-]	58-89-9
Pesticide	BHC[gamma-]	58-89-9
Pesticide	BHC[gamma-]	58-89-9
Pesticide	BHC[gamma-]	58-89-9
Pesticide	BHC[gamma-]	58-89-9
Pesticide	BHC[gamma-]	58-89-9
Pesticide	Chlordane[alpha-]	5103-71-9
Pesticide	Chlordane[alpha-]	5103-71-9
Pesticide	Chlordane[alpha-]	5103-71-9
Pesticide	Chlordane[alpha-]	5103-71-9
Pesticide	Chlordane[alpha-]	5103-71-9
Pesticide	Chlordane[alpha-]	5103-71-9
Pesticide	Chlordane[alpha-]	5103-71-9
Pesticide	Chlordane[alpha-]	5103-71-9
Pesticide	Chlordane[alpha-]	5103-71-9
Pesticide	Chlordane[alpha-]	5103-71-9
Pesticide	Chlordane[alpha-]	5103-71-9
Pesticide	Chlordane[alpha-]	5103-71-9
Pesticide	Chlordane[alpha-]	5103-71-9
Pesticide	Chlordane[alpha-]	5103-71-9
Pesticide	Chlordane[alpha-]	5103-71-9
Pesticide	Chlordane[alpha-]	5103-71-9
Pesticide	Chlordane[alpha-]	5103-71-9
Pesticide	Chlordane[alpha-]	5103-71-9
Pesticide	Chlordane[alpha-]	5103-71-9
Pesticide	Chlordane[alpha-]	5103-71-9
Pesticide	Chlordane[alpha-]	5103-71-9
Pesticide	Chlordane[alpha-]	5103-71-9

Pesticide	Chlordane[gamma-]	5103-74-2
Pesticide	Chlordane[gamma-]	5103-74-2
Pesticide	Chlordane[gamma-]	5103-74-2
Pesticide	Chlordane[gamma-]	5103-74-2
Pesticide	Chlordane[gamma-]	5103-74-2
Pesticide	Chlordane[gamma-]	5103-74-2
Pesticide	Chlordane[gamma-]	5103-74-2
Pesticide	Chlordane[gamma-]	5103-74-2
Pesticide	Chlordane[gamma-]	5103-74-2
Pesticide	Chlordane[gamma-]	5103-74-2
Pesticide	Chlordane[gamma-]	5103-74-2
Pesticide	Chlordane[gamma-]	5103-74-2
Pesticide	Chlordane[gamma-]	5103-74-2
Pesticide	Chlordane[gamma-]	5103-74-2
Pesticide	Chlordane[gamma-]	5103-74-2
Pesticide	Chlordane[gamma-]	5103-74-2
Pesticide	Chlordane[gamma-]	5103-74-2
Pesticide	Chlordane[gamma-]	5103-74-2
Pesticide	Chlordane[gamma-]	5103-74-2
Pesticide	Chlordane[gamma-]	5103-74-2
Pesticide	DDD[4,4'-]	72-54-8
Pesticide	DDD[4,4'-]	72-54-8
Pesticide	DDD[4,4'-]	72-54-8
Pesticide	DDD[4,4'-]	72-54-8
Pesticide	DDD[4,4'-]	72-54-8
Pesticide	DDD[4,4'-]	72-54-8
Pesticide	DDD[4,4'-]	72-54-8
Pesticide	DDD[4,4'-]	72-54-8
Pesticide	DDD[4,4'-]	72-54-8
Pesticide	DDD[4,4'-]	72-54-8
Pesticide	DDD[4,4'-]	72-54-8
Pesticide	DDE[4,4'-]	72-55-9
Pesticide	DDE[4,4'-]	72-55-9
Pesticide	DDE[4,4'-]	72-55-9
Pesticide	DDE[4,4'-]	72-55-9
Pesticide	DDE[4,4'-]	72-55-9
Pesticide	DDE[4,4'-]	72-55-9
Pesticide	DDE[4,4'-]	72-55-9
Pesticide	DDE[4,4'-]	72-55-9
Pesticide	DDE[4,4'-]	72-55-9
Pesticide	DDE[4,4'-]	72-55-9
Pesticide	DDE[4,4'-]	72-55-9
Pesticide	DDE[4,4'-]	72-55-9
Pesticide	DDE[4,4'-]	72-55-9
Pesticide	DDE[4,4'-]	72-55-9

Pesticide	DDE[4,4'-]	72-55-9
Pesticide	DDE[4,4'-]	72-55-9
Pesticide	DDE[4,4'-]	72-55-9
Pesticide	DDE[4,4'-]	72-55-9
Pesticide	DDE[4,4'-]	72-55-9
Pesticide	DDE[4,4'-]	72-55-9
Pesticide	DDE[4,4'-]	72-55-9
Pesticide	DDT[4,4'-]	50-29-3
Pesticide	DDT[4,4'-]	50-29-3
Pesticide	DDT[4,4'-]	50-29-3
Pesticide	DDT[4,4'-]	50-29-3
Pesticide	DDT[4,4'-]	50-29-3
Pesticide	DDT[4,4'-]	50-29-3
Pesticide	DDT[4,4'-]	50-29-3
Pesticide	DDT[4,4'-]	50-29-3
Pesticide	DDT[4,4'-]	50-29-3
Pesticide	DDT[4,4'-]	50-29-3
Pesticide	DDT[4,4'-]	50-29-3
Pesticide	DDT[4,4'-]	50-29-3
Pesticide	DDT[4,4'-]	50-29-3
Pesticide	DDT[4,4'-]	50-29-3
Pesticide	DDT[4,4'-]	50-29-3
Pesticide	DDT[4,4'-]	50-29-3
Pesticide	DDT[4,4'-]	50-29-3
Pesticide	DDT[4,4'-]	50-29-3
Pesticide	DDT[4,4'-]	50-29-3
Pesticide	DDT[4,4'-]	50-29-3
Pesticide	DDT[4,4'-]	50-29-3
Pesticide	Dieldrin	60-57-1
Pesticide	Dieldrin	60-57-1
Pesticide	Dieldrin	60-57-1
Pesticide	Dieldrin	60-57-1
Pesticide	Dieldrin	60-57-1
Pesticide	Dieldrin	60-57-1
Pesticide	Dieldrin	60-57-1
Pesticide	Dieldrin	60-57-1
Pesticide	Dieldrin	60-57-1
Pesticide	Dieldrin	60-57-1
Pesticide	Dieldrin	60-57-1
Pesticide	Dieldrin	60-57-1
Pesticide	Dieldrin	60-57-1
Pesticide	Dieldrin	60-57-1
Pesticide	Dieldrin	60-57-1
Pesticide	Dieldrin	60-57-1
Pesticide	Dieldrin	60-57-1
Pesticide	Dieldrin	60-57-1

Pesticide	Dieldrin	60-57-1
Pesticide	Dieldrin	60-57-1
Pesticide	Dieldrin	60-57-1
Pesticide	Dieldrin	60-57-1
Pesticide	Endosulfan	115-29-7
Pesticide	Endosulfan	115-29-7
Pesticide	Endosulfan	115-29-7
Pesticide	Endosulfan	115-29-7
Pesticide	Endosulfan	115-29-7
Pesticide	Endosulfan	115-29-7
Pesticide	Endosulfan	115-29-7
Pesticide	Endosulfan	115-29-7
Pesticide	Endosulfan	115-29-7
Pesticide	Endosulfan	115-29-7
Pesticide	Endosulfan	115-29-7
Pesticide	Endosulfan	115-29-7
Pesticide	Endosulfan	115-29-7
Pesticide	Endosulfan	115-29-7
Pesticide	Endosulfan	115-29-7
Pesticide	Endosulfan	115-29-7
Pesticide	Endosulfan	115-29-7
Pesticide	Endosulfan	115-29-7
Pesticide	Endosulfan	115-29-7
Pesticide	Endosulfan	115-29-7
Pesticide	Endrin	72-20-8
Pesticide	Endrin	72-20-8
Pesticide	Endrin	72-20-8
Pesticide	Endrin	72-20-8
Pesticide	Endrin	72-20-8
Pesticide	Endrin	72-20-8
Pesticide	Endrin	72-20-8
Pesticide	Endrin	72-20-8
Pesticide	Endrin	72-20-8
Pesticide	Endrin	72-20-8
Pesticide	Endrin	72-20-8
Pesticide	Endrin	72-20-8
Pesticide	Endrin	72-20-8
Pesticide	Endrin	72-20-8
Pesticide	Endrin	72-20-8
Pesticide	Endrin	72-20-8
Pesticide	Endrin	72-20-8
Pesticide	Endrin	72-20-8
Pesticide	Endrin	72-20-8
Pesticide	Endrin	72-20-8
Pesticide	Endrin	72-20-8

Pesticide	Heptachlor	76-44-8
Pesticide	Heptachlor	76-44-8
Pesticide	Heptachlor	76-44-8
Pesticide	Heptachlor	76-44-8
Pesticide	Heptachlor	76-44-8
Pesticide	Heptachlor	76-44-8
Pesticide	Heptachlor	76-44-8
Pesticide	Heptachlor	76-44-8
Pesticide	Heptachlor	76-44-8
Pesticide	Heptachlor	76-44-8
Pesticide	Heptachlor	76-44-8
Pesticide	Heptachlor	76-44-8
Pesticide	Heptachlor	76-44-8
Pesticide	Heptachlor	76-44-8
Pesticide	Heptachlor	76-44-8
Pesticide	Heptachlor	76-44-8
Pesticide	Heptachlor	76-44-8
Pesticide	Heptachlor	76-44-8
Pesticide	Heptachlor	76-44-8
Pesticide	Heptachlor	76-44-8
Pesticide	Heptachlor	76-44-8
Pesticide	Kepone	143-50-0
Pesticide	Kepone	143-50-0
Pesticide	Kepone	143-50-0
Pesticide	Kepone	143-50-0
Pesticide	Kepone	143-50-0
Pesticide	Kepone	143-50-0
Pesticide	Kepone	143-50-0
Pesticide	Kepone	143-50-0
Pesticide	Kepone	143-50-0
Pesticide	Kepone	143-50-0
Pesticide	Kepone	143-50-0
Pesticide	Kepone	143-50-0
Pesticide	Kepone	143-50-0
Pesticide	Kepone	143-50-0
Pesticide	Kepone	143-50-0
Pesticide	Kepone	143-50-0
Pesticide	Kepone	143-50-0
Pesticide	Kepone	143-50-0
Pesticide	Methoxychlor[4,4'-]	72-43-5
Pesticide	Methoxychlor[4,4'-]	72-43-5
Pesticide	Methoxychlor[4,4'-]	72-43-5
Pesticide	Methoxychlor[4,4'-]	72-43-5
Pesticide	Methoxychlor[4,4'-]	72-43-5
Pesticide	Methoxychlor[4,4'-]	72-43-5

Pesticide	Methoxychlor[4,4'-]	72-43-5
Pesticide	Methoxychlor[4,4'-]	72-43-5
Pesticide	Methoxychlor[4,4'-]	72-43-5
Pesticide	Methoxychlor[4,4'-]	72-43-5
Pesticide	Methoxychlor[4,4'-]	72-43-5
Pesticide	Methoxychlor[4,4'-]	72-43-5
Pesticide	Methoxychlor[4,4'-]	72-43-5
Pesticide	Methoxychlor[4,4'-]	72-43-5
Pesticide	Methoxychlor[4,4'-]	72-43-5
Pesticide	Methoxychlor[4,4'-]	72-43-5
Pesticide	Methoxychlor[4,4'-]	72-43-5
Pesticide	Methoxychlor[4,4'-]	72-43-5
Pesticide	Methoxychlor[4,4'-]	72-43-5
Pesticide	Methoxychlor[4,4'-]	72-43-5
Pesticide	Methoxychlor[4,4'-]	72-43-5
Pesticide	Toxaphene (Technical Grade)	8001-35-2
Pesticide	Toxaphene (Technical Grade)	8001-35-2
Pesticide	Toxaphene (Technical Grade)	8001-35-2
Pesticide	Toxaphene (Technical Grade)	8001-35-2
Pesticide	Toxaphene (Technical Grade)	8001-35-2
Pesticide	Toxaphene (Technical Grade)	8001-35-2
Pesticide	Toxaphene (Technical Grade)	8001-35-2
Pesticide	Toxaphene (Technical Grade)	8001-35-2
Pesticide	Toxaphene (Technical Grade)	8001-35-2
Pesticide	Toxaphene (Technical Grade)	8001-35-2
Pesticide	Toxaphene (Technical Grade)	8001-35-2
Pesticide	Toxaphene (Technical Grade)	8001-35-2
Pesticide	Toxaphene (Technical Grade)	8001-35-2
Pesticide	Toxaphene (Technical Grade)	8001-35-2
Pesticide	Toxaphene (Technical Grade)	8001-35-2
Pesticide	Toxaphene (Technical Grade)	8001-35-2
Pesticide	Toxaphene (Technical Grade)	8001-35-2
Pesticide	Toxaphene (Technical Grade)	8001-35-2
Pesticide	Toxaphene (Technical Grade)	8001-35-2
Pesticide	Toxaphene (Technical Grade)	8001-35-2
Polyaromatic Hydrocarbon	Acenaphthene	83-32-9
Polyaromatic Hydrocarbon	Acenaphthene	83-32-9
Polyaromatic Hydrocarbon	Acenaphthene	83-32-9
Polyaromatic Hydrocarbon	Acenaphthene	83-32-9
Polyaromatic Hydrocarbon	Acenaphthene	83-32-9
Polyaromatic Hydrocarbon	Acenaphthene	83-32-9
Polyaromatic Hydrocarbon	Acenaphthene	83-32-9
Polyaromatic Hydrocarbon	Acenaphthene	83-32-9
Polyaromatic Hydrocarbon	Acenaphthene	83-32-9
Polyaromatic Hydrocarbon	Acenaphthene	83-32-9
Polyaromatic Hydrocarbon	Acenaphthene	83-32-9

Polyaromatic Hydrocarbon	Acenaphthene	83-32-9
Polyaromatic Hydrocarbon	Acenaphthene	83-32-9
Polyaromatic Hydrocarbon	Acenaphthylene	208-96-8
Polyaromatic Hydrocarbon	Acenaphthylene	208-96-8
Polyaromatic Hydrocarbon	Acenaphthylene	208-96-8
Polyaromatic Hydrocarbon	Acenaphthylene	208-96-8
Polyaromatic Hydrocarbon	Acenaphthylene	208-96-8
Polyaromatic Hydrocarbon	Acenaphthylene	208-96-8
Polyaromatic Hydrocarbon	Acenaphthylene	208-96-8
Polyaromatic Hydrocarbon	Acenaphthylene	208-96-8
Polyaromatic Hydrocarbon	Acenaphthylene	208-96-8
Polyaromatic Hydrocarbon	Acenaphthylene	208-96-8
Polyaromatic Hydrocarbon	Acenaphthylene	208-96-8
Polyaromatic Hydrocarbon	Acenaphthylene	208-96-8
Polyaromatic Hydrocarbon	Anthracene	120-12-7
Polyaromatic Hydrocarbon	Anthracene	120-12-7
Polyaromatic Hydrocarbon	Anthracene	120-12-7
Polyaromatic Hydrocarbon	Anthracene	120-12-7
Polyaromatic Hydrocarbon	Anthracene	120-12-7
Polyaromatic Hydrocarbon	Anthracene	120-12-7
Polyaromatic Hydrocarbon	Anthracene	120-12-7
Polyaromatic Hydrocarbon	Anthracene	120-12-7
Polyaromatic Hydrocarbon	Anthracene	120-12-7
Polyaromatic Hydrocarbon	Anthracene	120-12-7
Polyaromatic Hydrocarbon	Anthracene	120-12-7
Polyaromatic Hydrocarbon	Anthracene	120-12-7
Polyaromatic Hydrocarbon	Benzo(a)anthracene	56-55-3
Polyaromatic Hydrocarbon	Benzo(a)anthracene	56-55-3
Polyaromatic Hydrocarbon	Benzo(a)anthracene	56-55-3
Polyaromatic Hydrocarbon	Benzo(a)anthracene	56-55-3
Polyaromatic Hydrocarbon	Benzo(a)anthracene	56-55-3
Polyaromatic Hydrocarbon	Benzo(a)anthracene	56-55-3
Polyaromatic Hydrocarbon	Benzo(a)anthracene	56-55-3
Polyaromatic Hydrocarbon	Benzo(a)anthracene	56-55-3
Polyaromatic Hydrocarbon	Benzo(a)anthracene	56-55-3
Polyaromatic Hydrocarbon	Benzo(a)anthracene	56-55-3
Polyaromatic Hydrocarbon	Benzo(a)anthracene	56-55-3
Polyaromatic Hydrocarbon	Benzo(a)anthracene	56-55-3
Polyaromatic Hydrocarbon	Benzo(a)anthracene	56-55-3
Polyaromatic Hydrocarbon	Benzo(a)anthracene	56-55-3
Polyaromatic Hydrocarbon	Benzo(a)anthracene	56-55-3
Polyaromatic Hydrocarbon	Benzo(a)anthracene	56-55-3
Polyaromatic Hydrocarbon	Benzo(a)anthracene	56-55-3
Polyaromatic Hydrocarbon	Benzo(a)anthracene	56-55-3
Polyaromatic Hydrocarbon	Benzo(a)pyrene	50-32-8

Polyaromatic Hydrocarbon	Benzo(a)pyrene	50-32-8
Polyaromatic Hydrocarbon	Benzo(a)pyrene	50-32-8
Polyaromatic Hydrocarbon	Benzo(a)pyrene	50-32-8
Polyaromatic Hydrocarbon	Benzo(a)pyrene	50-32-8
Polyaromatic Hydrocarbon	Benzo(a)pyrene	50-32-8
Polyaromatic Hydrocarbon	Benzo(a)pyrene	50-32-8
Polyaromatic Hydrocarbon	Benzo(a)pyrene	50-32-8
Polyaromatic Hydrocarbon	Benzo(a)pyrene	50-32-8
Polyaromatic Hydrocarbon	Benzo(a)pyrene	50-32-8
Polyaromatic Hydrocarbon	Benzo(a)pyrene	50-32-8
Polyaromatic Hydrocarbon	Benzo(a)pyrene	50-32-8
Polyaromatic Hydrocarbon	Benzo(b)fluoranthene	205-99-2
Polyaromatic Hydrocarbon	Benzo(b)fluoranthene	205-99-2
Polyaromatic Hydrocarbon	Benzo(b)fluoranthene	205-99-2
Polyaromatic Hydrocarbon	Benzo(b)fluoranthene	205-99-2
Polyaromatic Hydrocarbon	Benzo(b)fluoranthene	205-99-2
Polyaromatic Hydrocarbon	Benzo(b)fluoranthene	205-99-2
Polyaromatic Hydrocarbon	Benzo(b)fluoranthene	205-99-2
Polyaromatic Hydrocarbon	Benzo(b)fluoranthene	205-99-2
Polyaromatic Hydrocarbon	Benzo(b)fluoranthene	205-99-2
Polyaromatic Hydrocarbon	Benzo(b)fluoranthene	205-99-2
Polyaromatic Hydrocarbon	Benzo(b)fluoranthene	205-99-2
Polyaromatic Hydrocarbon	Benzo(b)fluoranthene	205-99-2
Polyaromatic Hydrocarbon	Benzo(g,h,i)perylene	191-24-2
Polyaromatic Hydrocarbon	Benzo(g,h,i)perylene	191-24-2
Polyaromatic Hydrocarbon	Benzo(g,h,i)perylene	191-24-2
Polyaromatic Hydrocarbon	Benzo(g,h,i)perylene	191-24-2
Polyaromatic Hydrocarbon	Benzo(g,h,i)perylene	191-24-2
Polyaromatic Hydrocarbon	Benzo(g,h,i)perylene	191-24-2
Polyaromatic Hydrocarbon	Benzo(g,h,i)perylene	191-24-2
Polyaromatic Hydrocarbon	Benzo(g,h,i)perylene	191-24-2
Polyaromatic Hydrocarbon	Benzo(g,h,i)perylene	191-24-2
Polyaromatic Hydrocarbon	Benzo(g,h,i)perylene	191-24-2
Polyaromatic Hydrocarbon	Benzo(g,h,i)perylene	191-24-2
Polyaromatic Hydrocarbon	Benzo(g,h,i)perylene	191-24-2
Polyaromatic Hydrocarbon	Benzo(k)fluoranthene	207-08-9
Polyaromatic Hydrocarbon	Benzo(k)fluoranthene	207-08-9
Polyaromatic Hydrocarbon	Benzo(k)fluoranthene	207-08-9
Polyaromatic Hydrocarbon	Benzo(k)fluoranthene	207-08-9
Polyaromatic Hydrocarbon	Benzo(k)fluoranthene	207-08-9
Polyaromatic Hydrocarbon	Benzo(k)fluoranthene	207-08-9
Polyaromatic Hydrocarbon	Benzo(k)fluoranthene	207-08-9
Polyaromatic Hydrocarbon	Benzo(k)fluoranthene	207-08-9
Polyaromatic Hydrocarbon	Benzo(k)fluoranthene	207-08-9
Polyaromatic Hydrocarbon	Benzo(k)fluoranthene	207-08-9

Polyaromatic Hydrocarbon	Benzo(k)fluoranthene	207-08-9
Polyaromatic Hydrocarbon	Chrysene	218-01-9
Polyaromatic Hydrocarbon	Chrysene	218-01-9
Polyaromatic Hydrocarbon	Chrysene	218-01-9
Polyaromatic Hydrocarbon	Chrysene	218-01-9
Polyaromatic Hydrocarbon	Chrysene	218-01-9
Polyaromatic Hydrocarbon	Chrysene	218-01-9
Polyaromatic Hydrocarbon	Chrysene	218-01-9
Polyaromatic Hydrocarbon	Chrysene	218-01-9
Polyaromatic Hydrocarbon	Chrysene	218-01-9
Polyaromatic Hydrocarbon	Chrysene	218-01-9
Polyaromatic Hydrocarbon	Chrysene	218-01-9
Polyaromatic Hydrocarbon	Chrysene	218-01-9
Polyaromatic Hydrocarbon	Dibenzo(a,h)anthracene	53-70-3
Polyaromatic Hydrocarbon	Dibenzo(a,h)anthracene	53-70-3
Polyaromatic Hydrocarbon	Dibenzo(a,h)anthracene	53-70-3
Polyaromatic Hydrocarbon	Dibenzo(a,h)anthracene	53-70-3
Polyaromatic Hydrocarbon	Dibenzo(a,h)anthracene	53-70-3
Polyaromatic Hydrocarbon	Dibenzo(a,h)anthracene	53-70-3
Polyaromatic Hydrocarbon	Dibenzo(a,h)anthracene	53-70-3
Polyaromatic Hydrocarbon	Dibenzo(a,h)anthracene	53-70-3
Polyaromatic Hydrocarbon	Dibenzo(a,h)anthracene	53-70-3
Polyaromatic Hydrocarbon	Dibenzo(a,h)anthracene	53-70-3
Polyaromatic Hydrocarbon	Dibenzo(a,h)anthracene	53-70-3
Polyaromatic Hydrocarbon	Fluoranthene	206-44-0
Polyaromatic Hydrocarbon	Fluoranthene	206-44-0
Polyaromatic Hydrocarbon	Fluoranthene	206-44-0
Polyaromatic Hydrocarbon	Fluoranthene	206-44-0
Polyaromatic Hydrocarbon	Fluoranthene	206-44-0
Polyaromatic Hydrocarbon	Fluoranthene	206-44-0
Polyaromatic Hydrocarbon	Fluoranthene	206-44-0
Polyaromatic Hydrocarbon	Fluoranthene	206-44-0
Polyaromatic Hydrocarbon	Fluoranthene	206-44-0
Polyaromatic Hydrocarbon	Fluoranthene	206-44-0
Polyaromatic Hydrocarbon	Fluoranthene	206-44-0
Polyaromatic Hydrocarbon	Fluoranthene	206-44-0
Polyaromatic Hydrocarbon	Fluorene	86-73-7
Polyaromatic Hydrocarbon	Fluorene	86-73-7
Polyaromatic Hydrocarbon	Fluorene	86-73-7
Polyaromatic Hydrocarbon	Fluorene	86-73-7
Polyaromatic Hydrocarbon	Fluorene	86-73-7
Polyaromatic Hydrocarbon	Fluorene	86-73-7
Polyaromatic Hydrocarbon	Fluorene	86-73-7
Polyaromatic Hydrocarbon	Fluorene	86-73-7
Polyaromatic Hydrocarbon	Fluorene	86-73-7

Polyaromatic Hydrocarbon	Fluorene	86-73-7
Polyaromatic Hydrocarbon	Fluorene	86-73-7
Polyaromatic Hydrocarbon	Fluorene	86-73-7
Polyaromatic Hydrocarbon	Fluorene	86-73-7
Polyaromatic Hydrocarbon	Indeno(1,2,3-cd)pyrene	193-39-5
Polyaromatic Hydrocarbon	Indeno(1,2,3-cd)pyrene	193-39-5
Polyaromatic Hydrocarbon	Indeno(1,2,3-cd)pyrene	193-39-5
Polyaromatic Hydrocarbon	Indeno(1,2,3-cd)pyrene	193-39-5
Polyaromatic Hydrocarbon	Indeno(1,2,3-cd)pyrene	193-39-5
Polyaromatic Hydrocarbon	Indeno(1,2,3-cd)pyrene	193-39-5
Polyaromatic Hydrocarbon	Indeno(1,2,3-cd)pyrene	193-39-5
Polyaromatic Hydrocarbon	Indeno(1,2,3-cd)pyrene	193-39-5
Polyaromatic Hydrocarbon	Indeno(1,2,3-cd)pyrene	193-39-5
Polyaromatic Hydrocarbon	Indeno(1,2,3-cd)pyrene	193-39-5
Polyaromatic Hydrocarbon	Indeno(1,2,3-cd)pyrene	193-39-5
Polyaromatic Hydrocarbon	Indeno(1,2,3-cd)pyrene	193-39-5
Polyaromatic Hydrocarbon	Methylnaphthalene[2-]	91-57-6
Polyaromatic Hydrocarbon	Methylnaphthalene[2-]	91-57-6
Polyaromatic Hydrocarbon	Methylnaphthalene[2-]	91-57-6
Polyaromatic Hydrocarbon	Methylnaphthalene[2-]	91-57-6
Polyaromatic Hydrocarbon	Methylnaphthalene[2-]	91-57-6
Polyaromatic Hydrocarbon	Methylnaphthalene[2-]	91-57-6
Polyaromatic Hydrocarbon	Methylnaphthalene[2-]	91-57-6
Polyaromatic Hydrocarbon	Methylnaphthalene[2-]	91-57-6
Polyaromatic Hydrocarbon	Methylnaphthalene[2-]	91-57-6
Polyaromatic Hydrocarbon	Methylnaphthalene[2-]	91-57-6
Polyaromatic Hydrocarbon	Methylnaphthalene[2-]	91-57-6
Polyaromatic Hydrocarbon	Naphthalene	91-20-3
Polyaromatic Hydrocarbon	Naphthalene	91-20-3
Polyaromatic Hydrocarbon	Naphthalene	91-20-3
Polyaromatic Hydrocarbon	Naphthalene	91-20-3
Polyaromatic Hydrocarbon	Naphthalene	91-20-3
Polyaromatic Hydrocarbon	Naphthalene	91-20-3
Polyaromatic Hydrocarbon	Naphthalene	91-20-3
Polyaromatic Hydrocarbon	Naphthalene	91-20-3
Polyaromatic Hydrocarbon	Naphthalene	91-20-3
Polyaromatic Hydrocarbon	Naphthalene	91-20-3
Polyaromatic Hydrocarbon	Naphthalene	91-20-3
Polyaromatic Hydrocarbon	Naphthalene	91-20-3
Polyaromatic Hydrocarbon	Naphthalene	91-20-3
Polyaromatic Hydrocarbon	Naphthalene	91-20-3
Polyaromatic Hydrocarbon	Naphthalene	91-20-3
Polyaromatic Hydrocarbon	Naphthalene	91-20-3
Polyaromatic Hydrocarbon	Naphthalene	91-20-3
Polyaromatic Hydrocarbon	Naphthalene	91-20-3

Polyaromatic Hydrocarbon	Naphthalene	91-20-3
Polyaromatic Hydrocarbon	Naphthalene	91-20-3
Polyaromatic Hydrocarbon	Naphthalene	91-20-3
Polyaromatic Hydrocarbon	Phenanthrene	85-01-8
Polyaromatic Hydrocarbon	Phenanthrene	85-01-8
Polyaromatic Hydrocarbon	Phenanthrene	85-01-8
Polyaromatic Hydrocarbon	Phenanthrene	85-01-8
Polyaromatic Hydrocarbon	Phenanthrene	85-01-8
Polyaromatic Hydrocarbon	Phenanthrene	85-01-8
Polyaromatic Hydrocarbon	Phenanthrene	85-01-8
Polyaromatic Hydrocarbon	Phenanthrene	85-01-8
Polyaromatic Hydrocarbon	Phenanthrene	85-01-8
Polyaromatic Hydrocarbon	Phenanthrene	85-01-8
Polyaromatic Hydrocarbon	Phenanthrene	85-01-8
Polyaromatic Hydrocarbon	Phenanthrene	85-01-8
Polyaromatic Hydrocarbon	Phenanthrene	85-01-8
Polyaromatic Hydrocarbon	Pyrene	129-00-0
Polyaromatic Hydrocarbon	Pyrene	129-00-0
Polyaromatic Hydrocarbon	Pyrene	129-00-0
Polyaromatic Hydrocarbon	Pyrene	129-00-0
Polyaromatic Hydrocarbon	Pyrene	129-00-0
Polyaromatic Hydrocarbon	Pyrene	129-00-0
Polyaromatic Hydrocarbon	Pyrene	129-00-0
Polyaromatic Hydrocarbon	Pyrene	129-00-0
Polyaromatic Hydrocarbon	Pyrene	129-00-0
Polyaromatic Hydrocarbon	Pyrene	129-00-0
Polyaromatic Hydrocarbon	Pyrene	129-00-0
Polyaromatic Hydrocarbon	Pyrene	129-00-0
Polyaromatic Hydrocarbon	Pyrene	129-00-0
Polyaromatic Hydrocarbon	Pyrene	129-00-0
Polyaromatic Hydrocarbon	Pyrene	129-00-0
Polyaromatic Hydrocarbon	Pyrene	129-00-0
Polychlorinated Biphenyl	Aroclor-1016	12674-11-2
Polychlorinated Biphenyl	Aroclor-1016	12674-11-2
Polychlorinated Biphenyl	Aroclor-1016	12674-11-2
Polychlorinated Biphenyl	Aroclor-1016	12674-11-2
Polychlorinated Biphenyl	Aroclor-1016	12674-11-2
Polychlorinated Biphenyl	Aroclor-1016	12674-11-2
Polychlorinated Biphenyl	Aroclor-1016	12674-11-2
Polychlorinated Biphenyl	Aroclor-1016	12674-11-2
Polychlorinated Biphenyl	Aroclor-1016	12674-11-2
Polychlorinated Biphenyl	Aroclor-1016	12674-11-2
Polychlorinated Biphenyl	Aroclor-1016	12674-11-2

Polychlorinated Biphenyl	Aroclor-1242	53469-21-9
Polychlorinated Biphenyl	Aroclor-1242	53469-21-9
Polychlorinated Biphenyl	Aroclor-1242	53469-21-9
Polychlorinated Biphenyl	Aroclor-1242	53469-21-9
Polychlorinated Biphenyl	Aroclor-1242	53469-21-9
Polychlorinated Biphenyl	Aroclor-1242	53469-21-9
Polychlorinated Biphenyl	Aroclor-1242	53469-21-9
Polychlorinated Biphenyl	Aroclor-1242	53469-21-9
Polychlorinated Biphenyl	Aroclor-1242	53469-21-9
Polychlorinated Biphenyl	Aroclor-1242	53469-21-9
Polychlorinated Biphenyl	Aroclor-1242	53469-21-9
Polychlorinated Biphenyl	Aroclor-1242	53469-21-9
Polychlorinated Biphenyl	Aroclor-1242	53469-21-9
Polychlorinated Biphenyl	Aroclor-1242	53469-21-9
Polychlorinated Biphenyl	Aroclor-1242	53469-21-9
Polychlorinated Biphenyl	Aroclor-1242	53469-21-9
Polychlorinated Biphenyl	Aroclor-1242	53469-21-9
Polychlorinated Biphenyl	Aroclor-1242	53469-21-9
Polychlorinated Biphenyl	Aroclor-1242	53469-21-9
Polychlorinated Biphenyl	Aroclor-1242	53469-21-9
Polychlorinated Biphenyl	Aroclor-1248	12672-29-6
Polychlorinated Biphenyl	Aroclor-1248	12672-29-6
Polychlorinated Biphenyl	Aroclor-1248	12672-29-6
Polychlorinated Biphenyl	Aroclor-1248	12672-29-6
Polychlorinated Biphenyl	Aroclor-1248	12672-29-6
Polychlorinated Biphenyl	Aroclor-1248	12672-29-6
Polychlorinated Biphenyl	Aroclor-1248	12672-29-6
Polychlorinated Biphenyl	Aroclor-1248	12672-29-6
Polychlorinated Biphenyl	Aroclor-1248	12672-29-6
Polychlorinated Biphenyl	Aroclor-1248	12672-29-6
Polychlorinated Biphenyl	Aroclor-1248	12672-29-6
Polychlorinated Biphenyl	Aroclor-1248	12672-29-6
Polychlorinated Biphenyl	Aroclor-1248	12672-29-6
Polychlorinated Biphenyl	Aroclor-1248	12672-29-6
Polychlorinated Biphenyl	Aroclor-1248	12672-29-6
Polychlorinated Biphenyl	Aroclor-1248	12672-29-6
Polychlorinated Biphenyl	Aroclor-1248	12672-29-6
Polychlorinated Biphenyl	Aroclor-1248	12672-29-6
Polychlorinated Biphenyl	Aroclor-1254	11097-69-1
Polychlorinated Biphenyl	Aroclor-1254	11097-69-1
Polychlorinated Biphenyl	Aroclor-1254	11097-69-1
Polychlorinated Biphenyl	Aroclor-1254	11097-69-1
Polychlorinated Biphenyl	Aroclor-1254	11097-69-1

Polychlorinated Biphenyl	Aroclor-1254	11097-69-1
Polychlorinated Biphenyl	Aroclor-1254	11097-69-1
Polychlorinated Biphenyl	Aroclor-1254	11097-69-1
Polychlorinated Biphenyl	Aroclor-1254	11097-69-1
Polychlorinated Biphenyl	Aroclor-1254	11097-69-1
Polychlorinated Biphenyl	Aroclor-1254	11097-69-1
Polychlorinated Biphenyl	Aroclor-1254	11097-69-1
Polychlorinated Biphenyl	Aroclor-1254	11097-69-1
Polychlorinated Biphenyl	Aroclor-1254	11097-69-1
Polychlorinated Biphenyl	Aroclor-1254	11097-69-1
Polychlorinated Biphenyl	Aroclor-1254	11097-69-1
Polychlorinated Biphenyl	Aroclor-1254	11097-69-1
Polychlorinated Biphenyl	Aroclor-1254	11097-69-1
Polychlorinated Biphenyl	Aroclor-1254	11097-69-1
Polychlorinated Biphenyl	Aroclor-1254	11097-69-1
Polychlorinated Biphenyl	Aroclor-1254	11097-69-1
Polychlorinated Biphenyl	Aroclor-1260	11096-82-5
Polychlorinated Biphenyl	Aroclor-1260	11096-82-5
Polychlorinated Biphenyl	Aroclor-1260	11096-82-5
Polychlorinated Biphenyl	Aroclor-1260	11096-82-5
Polychlorinated Biphenyl	Aroclor-1260	11096-82-5
Polychlorinated Biphenyl	Aroclor-1260	11096-82-5
Polychlorinated Biphenyl	Aroclor-1260	11096-82-5
Polychlorinated Biphenyl	Aroclor-1260	11096-82-5
Polychlorinated Biphenyl	Aroclor-1260	11096-82-5
Polychlorinated Biphenyl	Aroclor-1260	11096-82-5
Polychlorinated Biphenyl	Aroclor-1260	11096-82-5
Polychlorinated Biphenyl	Aroclor-1260	11096-82-5
Polychlorinated Biphenyl	Aroclor-1260	11096-82-5
Polychlorinated Biphenyl	Aroclor-1260	11096-82-5
Polychlorinated Biphenyl	Aroclor-1260	11096-82-5
Polychlorinated Biphenyl	Aroclor-1260	11096-82-5
Polychlorinated Biphenyl	Aroclor-1260	11096-82-5
Polychlorinated Biphenyl	Aroclor-1260	11096-82-5
Polychlorinated Biphenyl	Aroclor-1260	11096-82-5
Radionuclide	Americium-241	AM-241
Radionuclide	Americium-241	AM-241
Radionuclide	Americium-241	AM-241
Radionuclide	Americium-241	AM-241
Radionuclide	Americium-241	AM-241
Radionuclide	Americium-241	AM-241
Radionuclide	Americium-241	AM-241
Radionuclide	Americium-241	AM-241
Radionuclide	Americium-241	AM-241

Radionuclide	Americium-241	AM-241
Radionuclide	Americium-241	AM-241
Radionuclide	Americium-241	AM-241
Radionuclide	Americium-241	AM-241
Radionuclide	Americium-241	AM-241
Radionuclide	Americium-241	AM-241
Radionuclide	Americium-241	AM-241
Radionuclide	Americium-241	AM-241
Radionuclide	Americium-241	AM-241
Radionuclide	Americium-241	AM-241
Radionuclide	Americium-241	AM-241
Radionuclide	Americium-241	AM-241
Radionuclide	Americium-241	AM-241
Radionuclide	Americium-241	AM-241
Radionuclide	Americium-241	AM-241
Radionuclide	Americium-241	AM-241
Radionuclide	Americium-241	AM-241
Radionuclide	Americium-241	AM-241
Radionuclide	Americium-241	AM-241
Radionuclide	Cesium-134	CS-134
Radionuclide	Cesium-134	CS-134
Radionuclide	Cesium-134	CS-134
Radionuclide	Cesium-134	CS-134
Radionuclide	Cesium-134	CS-134
Radionuclide	Cesium-134	CS-134
Radionuclide	Cesium-134	CS-134
Radionuclide	Cesium-134	CS-134
Radionuclide	Cesium-134	CS-134
Radionuclide	Cesium-134	CS-134
Radionuclide	Cesium-134	CS-134
Radionuclide	Cesium-134	CS-134
Radionuclide	Cesium-134	CS-134
Radionuclide	Cesium-134	CS-134
Radionuclide	Cesium-134	CS-134
Radionuclide	Cesium-134	CS-134
Radionuclide	Cesium-134	CS-134
Radionuclide	Cesium-134	CS-134
Radionuclide	Cesium-134	CS-134
Radionuclide	Cesium-134	CS-134
Radionuclide	Cesium-134	CS-134
Radionuclide	Cesium-134	CS-134
Radionuclide	Cesium-134	CS-134
Radionuclide	Cesium-134	CS-134
Radionuclide	Cesium-134	CS-134

Radionuclide	Cesium-134	CS-134
Radionuclide	Cesium-134	CS-134
Radionuclide	Cesium-137 + Barium-137	CS-137/ BA-137
Radionuclide	Cesium-137 + Barium-137	CS-137/ BA-137
Radionuclide	Cesium-137 + Barium-137	CS-137/ BA-137
Radionuclide	Cesium-137 + Barium-137	CS-137/ BA-137
Radionuclide	Cesium-137 + Barium-137	CS-137/ BA-137
Radionuclide	Cesium-137 + Barium-137	CS-137/ BA-137
Radionuclide	Cesium-137 + Barium-137	CS-137/ BA-137
Radionuclide	Cesium-137 + Barium-137	CS-137/ BA-137
Radionuclide	Cesium-137 + Barium-137	CS-137/ BA-137
Radionuclide	Cesium-137 + Barium-137	CS-137/ BA-137
Radionuclide	Cesium-137 + Barium-137	CS-137/ BA-137
Radionuclide	Cesium-137 + Barium-137	CS-137/ BA-137
Radionuclide	Cesium-137 + Barium-137	CS-137/ BA-137
Radionuclide	Cesium-137 + Barium-137	CS-137/ BA-137
Radionuclide	Cesium-137 + Barium-137	CS-137/ BA-137
Radionuclide	Cesium-137 + Barium-137	CS-137/ BA-137
Radionuclide	Cesium-137 + Barium-137	CS-137/ BA-137
Radionuclide	Cesium-137 + Barium-137	CS-137/ BA-137
Radionuclide	Cesium-137 + Barium-137	CS-137/ BA-137
Radionuclide	Cesium-137 + Barium-137	CS-137/ BA-137
Radionuclide	Cesium-137 + Barium-137	CS-137/ BA-137
Radionuclide	Cesium-137 + Barium-137	CS-137/ BA-137
Radionuclide	Cesium-137 + Barium-137	CS-137/ BA-137
Radionuclide	Cesium-137 + Barium-137	CS-137/ BA-137
Radionuclide	Cesium-137 + Barium-137	CS-137/ BA-137

Radionuclide	Cobalt-60	CO-60
Radionuclide	Cobalt-60	CO-60
Radionuclide	Cobalt-60	CO-60
Radionuclide	Cobalt-60	CO-60
Radionuclide	Cobalt-60	CO-60
Radionuclide	Cobalt-60	CO-60
Radionuclide	Cobalt-60	CO-60
Radionuclide	Cobalt-60	CO-60
Radionuclide	Cobalt-60	CO-60
Radionuclide	Cobalt-60	CO-60
Radionuclide	Cobalt-60	CO-60
Radionuclide	Cobalt-60	CO-60
Radionuclide	Cobalt-60	CO-60
Radionuclide	Cobalt-60	CO-60
Radionuclide	Cobalt-60	CO-60
Radionuclide	Cobalt-60	CO-60
Radionuclide	Cobalt-60	CO-60
Radionuclide	Cobalt-60	CO-60
Radionuclide	Cobalt-60	CO-60
Radionuclide	Cobalt-60	CO-60
Radionuclide	Cobalt-60	CO-60
Radionuclide	Cobalt-60	CO-60
Radionuclide	Cobalt-60	CO-60
Radionuclide	Cobalt-60	CO-60
Radionuclide	Cobalt-60	CO-60
Radionuclide	Cobalt-60	CO-60
Radionuclide	Cobalt-60	CO-60
Radionuclide	Cobalt-60	CO-60
Radionuclide	Europium-152	EU-152
Radionuclide	Europium-152	EU-152
Radionuclide	Europium-152	EU-152
Radionuclide	Europium-152	EU-152
Radionuclide	Europium-152	EU-152
Radionuclide	Europium-152	EU-152
Radionuclide	Europium-152	EU-152
Radionuclide	Europium-152	EU-152
Radionuclide	Europium-152	EU-152
Radionuclide	Europium-152	EU-152
Radionuclide	Europium-152	EU-152
Radionuclide	Europium-152	EU-152
Radionuclide	Europium-152	EU-152
Radionuclide	Europium-152	EU-152
Radionuclide	Europium-152	EU-152
Radionuclide	Europium-152	EU-152
Radionuclide	Europium-152	EU-152

Radionuclide	Europium-152	EU-152
Radionuclide	Europium-152	EU-152
Radionuclide	Europium-152	EU-152
Radionuclide	Europium-152	EU-152
Radionuclide	Europium-152	EU-152
Radionuclide	Europium-152	EU-152
Radionuclide	Europium-152	EU-152
Radionuclide	Europium-152	EU-152
Radionuclide	Europium-152	EU-152
Radionuclide	Europium-152	EU-152
Radionuclide	Europium-152	EU-152
Radionuclide	Lead-210	PB-210
Radionuclide	Lead-210	PB-210
Radionuclide	Lead-210	PB-210
Radionuclide	Lead-210	PB-210
Radionuclide	Lead-210	PB-210
Radionuclide	Lead-210	PB-210
Radionuclide	Lead-210	PB-210
Radionuclide	Lead-210	PB-210
Radionuclide	Lead-210	PB-210
Radionuclide	Lead-210	PB-210
Radionuclide	Lead-210	PB-210
Radionuclide	Lead-210	PB-210
Radionuclide	Lead-210	PB-210
Radionuclide	Lead-210	PB-210
Radionuclide	Lead-210	PB-210
Radionuclide	Lead-210	PB-210
Radionuclide	Lead-210	PB-210
Radionuclide	Lead-210	PB-210
Radionuclide	Lead-210	PB-210
Radionuclide	Lead-210	PB-210
Radionuclide	Lead-210	PB-210
Radionuclide	Lead-210	PB-210
Radionuclide	Lead-210	PB-210
Radionuclide	Lead-210	PB-210
Radionuclide	Lead-210	PB-210
Radionuclide	Lead-210	PB-210
Radionuclide	Lead-210	PB-210
Radionuclide	Neptunium-237	NP-237
Radionuclide	Neptunium-237	NP-237
Radionuclide	Neptunium-237	NP-237
Radionuclide	Neptunium-237	NP-237
Radionuclide	Neptunium-237	NP-237
Radionuclide	Neptunium-237	NP-237
Radionuclide	Neptunium-237	NP-237

Radionuclide	Neptunium-237	NP-237
Radionuclide	Neptunium-237	NP-237
Radionuclide	Neptunium-237	NP-237
Radionuclide	Neptunium-237	NP-237
Radionuclide	Neptunium-237	NP-237
Radionuclide	Neptunium-237	NP-237
Radionuclide	Neptunium-237	NP-237
Radionuclide	Neptunium-237	NP-237
Radionuclide	Neptunium-237	NP-237
Radionuclide	Neptunium-237	NP-237
Radionuclide	Neptunium-237	NP-237
Radionuclide	Neptunium-237	NP-237
Radionuclide	Neptunium-237	NP-237
Radionuclide	Neptunium-237	NP-237
Radionuclide	Neptunium-237	NP-237
Radionuclide	Neptunium-237	NP-237
Radionuclide	Neptunium-237	NP-237
Radionuclide	Neptunium-237	NP-237
Radionuclide	Neptunium-237	NP-237
Radionuclide	Neptunium-237	NP-237
Radionuclide	Neptunium-237	NP-237
Radionuclide	Neptunium-237	NP-237
Radionuclide	Plutonium-238	PU-238
Radionuclide	Plutonium-238	PU-238
Radionuclide	Plutonium-238	PU-238
Radionuclide	Plutonium-238	PU-238
Radionuclide	Plutonium-238	PU-238
Radionuclide	Plutonium-238	PU-238
Radionuclide	Plutonium-238	PU-238
Radionuclide	Plutonium-238	PU-238
Radionuclide	Plutonium-238	PU-238
Radionuclide	Plutonium-238	PU-238
Radionuclide	Plutonium-238	PU-238
Radionuclide	Plutonium-238	PU-238
Radionuclide	Plutonium-238	PU-238
Radionuclide	Plutonium-238	PU-238
Radionuclide	Plutonium-238	PU-238
Radionuclide	Plutonium-238	PU-238
Radionuclide	Plutonium-238	PU-238
Radionuclide	Plutonium-238	PU-238
Radionuclide	Plutonium-238	PU-238
Radionuclide	Plutonium-238	PU-238
Radionuclide	Plutonium-238	PU-238
Radionuclide	Plutonium-238	PU-238
Radionuclide	Plutonium-238	PU-238

Radionuclide	Plutonium-238	PU-238
Radionuclide	Plutonium-238	PU-238
Radionuclide	Plutonium-238	PU-238
Radionuclide	Plutonium-238	PU-238
Radionuclide	Plutonium-239, 240	PU-239/240
Radionuclide	Plutonium-239, 240	PU-239/240
Radionuclide	Plutonium-239, 240	PU-239/240
Radionuclide	Plutonium-239, 240	PU-239/240
Radionuclide	Plutonium-239, 240	PU-239/240
Radionuclide	Plutonium-239, 240	PU-239/240
Radionuclide	Plutonium-239, 240	PU-239/240
Radionuclide	Plutonium-239, 240	PU-239/240
Radionuclide	Plutonium-239, 240	PU-239/240
Radionuclide	Plutonium-239, 240	PU-239/240
Radionuclide	Plutonium-239, 240	PU-239/240
Radionuclide	Plutonium-239, 240	PU-239/240
Radionuclide	Plutonium-239, 240	PU-239/240
Radionuclide	Plutonium-239, 240	PU-239/240
Radionuclide	Plutonium-239, 240	PU-239/240
Radionuclide	Plutonium-239, 240	PU-239/240
Radionuclide	Plutonium-239, 240	PU-239/240
Radionuclide	Plutonium-239, 240	PU-239/240
Radionuclide	Plutonium-239, 240	PU-239/240
Radionuclide	Plutonium-239, 240	PU-239/240
Radionuclide	Plutonium-239, 240	PU-239/240
Radionuclide	Plutonium-239, 240	PU-239/240
Radionuclide	Plutonium-239, 240	PU-239/240
Radionuclide	Plutonium-239, 240	PU-239/240
Radionuclide	Plutonium-241	PU-241
Radionuclide	Plutonium-241	PU-241
Radionuclide	Plutonium-241	PU-241
Radionuclide	Plutonium-241	PU-241
Radionuclide	Plutonium-241	PU-241
Radionuclide	Plutonium-241	PU-241
Radionuclide	Plutonium-241	PU-241
Radionuclide	Plutonium-241	PU-241
Radionuclide	Plutonium-241	PU-241
Radionuclide	Plutonium-241	PU-241
Radionuclide	Plutonium-241	PU-241
Radionuclide	Plutonium-241	PU-241

Radionuclide	Plutonium-241	PU-241
Radionuclide	Plutonium-241	PU-241
Radionuclide	Plutonium-241	PU-241
Radionuclide	Plutonium-241	PU-241
Radionuclide	Plutonium-241	PU-241
Radionuclide	Plutonium-241	PU-241
Radionuclide	Plutonium-241	PU-241
Radionuclide	Plutonium-241	PU-241
Radionuclide	Plutonium-241	PU-241
Radionuclide	Plutonium-241	PU-241
Radionuclide	Plutonium-241	PU-241
Radionuclide	Plutonium-241	PU-241
Radionuclide	Plutonium-241	PU-241
Radionuclide	Plutonium-241	PU-241
Radionuclide	Plutonium-241	PU-241
Radionuclide	Plutonium-241	PU-241
Radionuclide	Radium-226	RA-226
Radionuclide	Radium-226	RA-226
Radionuclide	Radium-226	RA-226
Radionuclide	Radium-226	RA-226
Radionuclide	Radium-226	RA-226
Radionuclide	Radium-226	RA-226
Radionuclide	Radium-226	RA-226
Radionuclide	Radium-226	RA-226
Radionuclide	Radium-226	RA-226
Radionuclide	Radium-226	RA-226
Radionuclide	Radium-226	RA-226
Radionuclide	Radium-226	RA-226
Radionuclide	Radium-226	RA-226
Radionuclide	Radium-226	RA-226
Radionuclide	Radium-226	RA-226
Radionuclide	Radium-226	RA-226
Radionuclide	Radium-226	RA-226
Radionuclide	Radium-226	RA-226
Radionuclide	Radium-226	RA-226
Radionuclide	Radium-226	RA-226
Radionuclide	Radium-226	RA-226
Radionuclide	Radium-226	RA-226
Radionuclide	Radium-226	RA-226
Radionuclide	Radium-226	RA-226
Radionuclide	Radium-226	RA-226
Radionuclide	Radium-226	RA-226
Radionuclide	Radium-226	RA-226
Radionuclide	Radium-228	RA-228
Radionuclide	Radium-228	RA-228

Radionuclide	Radium-228	RA-228
Radionuclide	Radium-228	RA-228
Radionuclide	Radium-228	RA-228
Radionuclide	Radium-228	RA-228
Radionuclide	Radium-228	RA-228
Radionuclide	Radium-228	RA-228
Radionuclide	Radium-228	RA-228
Radionuclide	Radium-228	RA-228
Radionuclide	Radium-228	RA-228
Radionuclide	Radium-228	RA-228
Radionuclide	Radium-228	RA-228
Radionuclide	Radium-228	RA-228
Radionuclide	Radium-228	RA-228
Radionuclide	Radium-228	RA-228
Radionuclide	Radium-228	RA-228
Radionuclide	Radium-228	RA-228
Radionuclide	Radium-228	RA-228
Radionuclide	Radium-228	RA-228
Radionuclide	Radium-228	RA-228
Radionuclide	Radium-228	RA-228
Radionuclide	Radium-228	RA-228
Radionuclide	Radium-228	RA-228
Radionuclide	Radium-228	RA-228
Radionuclide	Radium-228	RA-228
Radionuclide	Radium-228	RA-228
Radionuclide	Radium-228	RA-228
Radionuclide	Radium-228	RA-228
Radionuclide	Sodium-22	NA-22
Radionuclide	Sodium-22	NA-22
Radionuclide	Sodium-22	NA-22
Radionuclide	Sodium-22	NA-22
Radionuclide	Sodium-22	NA-22
Radionuclide	Sodium-22	NA-22
Radionuclide	Sodium-22	NA-22
Radionuclide	Sodium-22	NA-22
Radionuclide	Sodium-22	NA-22
Radionuclide	Sodium-22	NA-22
Radionuclide	Sodium-22	NA-22
Radionuclide	Sodium-22	NA-22
Radionuclide	Sodium-22	NA-22
Radionuclide	Sodium-22	NA-22
Radionuclide	Sodium-22	NA-22
Radionuclide	Sodium-22	NA-22
Radionuclide	Sodium-22	NA-22
Radionuclide	Sodium-22	NA-22
Radionuclide	Sodium-22	NA-22

Radionuclide	Sodium-22	NA-22
Radionuclide	Sodium-22	NA-22
Radionuclide	Sodium-22	NA-22
Radionuclide	Sodium-22	NA-22
Radionuclide	Sodium-22	NA-22
Radionuclide	Sodium-22	NA-22
Radionuclide	Sodium-22	NA-22
Radionuclide	Sodium-22	NA-22
Radionuclide	Sodium-22	NA-22
Radionuclide	Strontium-90 + Yittrium-90	SR-90/ Y-90
Radionuclide	Strontium-90 + Yittrium-90	SR-90/ Y-90
Radionuclide	Strontium-90 + Yittrium-90	SR-90/ Y-90
Radionuclide	Strontium-90 + Yittrium-90	SR-90/ Y-90
Radionuclide	Strontium-90 + Yittrium-90	SR-90/ Y-90
Radionuclide	Strontium-90 + Yittrium-90	SR-90/ Y-90
Radionuclide	Strontium-90 + Yittrium-90	SR-90/ Y-90
Radionuclide	Strontium-90 + Yittrium-90	SR-90/ Y-90
Radionuclide	Strontium-90 + Yittrium-90	SR-90/ Y-90
Radionuclide	Strontium-90 + Yittrium-90	SR-90/ Y-90
Radionuclide	Strontium-90 + Yittrium-90	SR-90/ Y-90
Radionuclide	Strontium-90 + Yittrium-90	SR-90/ Y-90
Radionuclide	Strontium-90 + Yittrium-90	SR-90/ Y-90
Radionuclide	Strontium-90 + Yittrium-90	SR-90/ Y-90
Radionuclide	Strontium-90 + Yittrium-90	SR-90/ Y-90
Radionuclide	Strontium-90 + Yittrium-90	SR-90/ Y-90
Radionuclide	Strontium-90 + Yittrium-90	SR-90/ Y-90
Radionuclide	Strontium-90 + Yittrium-90	SR-90/ Y-90
Radionuclide	Strontium-90 + Yittrium-90	SR-90/ Y-90
Radionuclide	Strontium-90 + Yittrium-90	SR-90/ Y-90
Radionuclide	Strontium-90 + Yittrium-90	SR-90/ Y-90
Radionuclide	Strontium-90 + Yittrium-90	SR-90/ Y-90
Radionuclide	Strontium-90 + Yittrium-90	SR-90/ Y-90
Radionuclide	Strontium-90 + Yittrium-90	SR-90/ Y-90
Radionuclide	Strontium-90 + Yittrium-90	SR-90/ Y-90
Radionuclide	Thorium-228	TH-228
Radionuclide	Thorium-228	TH-228
Radionuclide	Thorium-228	TH-228
Radionuclide	Thorium-228	TH-228
Radionuclide	Thorium-228	TH-228
Radionuclide	Thorium-228	TH-228
Radionuclide	Thorium-228	TH-228
Radionuclide	Thorium-228	TH-228
Radionuclide	Thorium-228	TH-228

Radionuclide	Thorium-228	TH-228
Radionuclide	Thorium-228	TH-228
Radionuclide	Thorium-228	TH-228
Radionuclide	Thorium-228	TH-228
Radionuclide	Thorium-228	TH-228
Radionuclide	Thorium-228	TH-228
Radionuclide	Thorium-228	TH-228
Radionuclide	Thorium-228	TH-228
Radionuclide	Thorium-228	TH-228
Radionuclide	Thorium-228	TH-228
Radionuclide	Thorium-228	TH-228
Radionuclide	Thorium-228	TH-228
Radionuclide	Thorium-228	TH-228
Radionuclide	Thorium-228	TH-228
Radionuclide	Thorium-228	TH-228
Radionuclide	Thorium-228	TH-228
Radionuclide	Thorium-228	TH-228
Radionuclide	Thorium-228	TH-228
Radionuclide	Thorium-228	TH-228
Radionuclide	Thorium-228	TH-228
Radionuclide	Thorium-229	TH-229
Radionuclide	Thorium-229	TH-229
Radionuclide	Thorium-229	TH-229
Radionuclide	Thorium-229	TH-229
Radionuclide	Thorium-229	TH-229
Radionuclide	Thorium-229	TH-229
Radionuclide	Thorium-229	TH-229
Radionuclide	Thorium-229	TH-229
Radionuclide	Thorium-229	TH-229
Radionuclide	Thorium-229	TH-229
Radionuclide	Thorium-229	TH-229
Radionuclide	Thorium-229	TH-229
Radionuclide	Thorium-229	TH-229
Radionuclide	Thorium-229	TH-229
Radionuclide	Thorium-229	TH-229
Radionuclide	Thorium-229	TH-229
Radionuclide	Thorium-229	TH-229
Radionuclide	Thorium-229	TH-229
Radionuclide	Thorium-229	TH-229
Radionuclide	Thorium-229	TH-229
Radionuclide	Thorium-229	TH-229
Radionuclide	Thorium-229	TH-229
Radionuclide	Thorium-229	TH-229
Radionuclide	Thorium-229	TH-229
Radionuclide	Thorium-229	TH-229
Radionuclide	Thorium-229	TH-229
Radionuclide	Thorium-229	TH-229

Radionuclide	Thorium-229	TH-229
Radionuclide	Thorium-229	TH-229
Radionuclide	Thorium-230	TH-230
Radionuclide	Thorium-230	TH-230
Radionuclide	Thorium-230	TH-230
Radionuclide	Thorium-230	TH-230
Radionuclide	Thorium-230	TH-230
Radionuclide	Thorium-230	TH-230
Radionuclide	Thorium-230	TH-230
Radionuclide	Thorium-230	TH-230
Radionuclide	Thorium-230	TH-230
Radionuclide	Thorium-230	TH-230
Radionuclide	Thorium-230	TH-230
Radionuclide	Thorium-230	TH-230
Radionuclide	Thorium-230	TH-230
Radionuclide	Thorium-230	TH-230
Radionuclide	Thorium-230	TH-230
Radionuclide	Thorium-230	TH-230
Radionuclide	Thorium-230	TH-230
Radionuclide	Thorium-230	TH-230
Radionuclide	Thorium-230	TH-230
Radionuclide	Thorium-230	TH-230
Radionuclide	Thorium-230	TH-230
Radionuclide	Thorium-230	TH-230
Radionuclide	Thorium-230	TH-230
Radionuclide	Thorium-230	TH-230
Radionuclide	Thorium-230	TH-230
Radionuclide	Thorium-230	TH-230
Radionuclide	Thorium-232	TH-232
Radionuclide	Thorium-232	TH-232
Radionuclide	Thorium-232	TH-232
Radionuclide	Thorium-232	TH-232
Radionuclide	Thorium-232	TH-232
Radionuclide	Thorium-232	TH-232
Radionuclide	Thorium-232	TH-232
Radionuclide	Thorium-232	TH-232
Radionuclide	Thorium-232	TH-232
Radionuclide	Thorium-232	TH-232
Radionuclide	Thorium-232	TH-232
Radionuclide	Thorium-232	TH-232
Radionuclide	Thorium-232	TH-232
Radionuclide	Thorium-232	TH-232
Radionuclide	Thorium-232	TH-232

Radionuclide	Thorium-232	TH-232
Radionuclide	Thorium-232	TH-232
Radionuclide	Thorium-232	TH-232
Radionuclide	Thorium-232	TH-232
Radionuclide	Thorium-232	TH-232
Radionuclide	Thorium-232	TH-232
Radionuclide	Thorium-232	TH-232
Radionuclide	Thorium-232	TH-232
Radionuclide	Thorium-232	TH-232
Radionuclide	Thorium-232	TH-232
Radionuclide	Thorium-232	TH-232
Radionuclide	Thorium-232	TH-232
Radionuclide	Thorium-232	TH-232
Radionuclide	Tritium	H-3
Radionuclide	Tritium	H-3
Radionuclide	Tritium	H-3
Radionuclide	Tritium	H-3
Radionuclide	Tritium	H-3
Radionuclide	Tritium	H-3
Radionuclide	Tritium	H-3
Radionuclide	Tritium	H-3
Radionuclide	Tritium	H-3
Radionuclide	Tritium	H-3
Radionuclide	Tritium	H-3
Radionuclide	Tritium	H-3
Radionuclide	Tritium	H-3
Radionuclide	Tritium	H-3
Radionuclide	Tritium	H-3
Radionuclide	Tritium	H-3
Radionuclide	Tritium	H-3
Radionuclide	Tritium	H-3
Radionuclide	Tritium	H-3
Radionuclide	Tritium	H-3
Radionuclide	Tritium	H-3
Radionuclide	Tritium	H-3
Radionuclide	Tritium	H-3
Radionuclide	Tritium	H-3
Radionuclide	Tritium	H-3
Radionuclide	Tritium	H-3
Radionuclide	Tritium	H-3
Radionuclide	Tritium	H-3
Radionuclide	Uranium-233	U-233
Radionuclide	Uranium-233	U-233
Radionuclide	Uranium-233	U-233
Radionuclide	Uranium-233	U-233
Radionuclide	Uranium-233	U-233

Radionuclide	Uranium-233	U-233
Radionuclide	Uranium-233	U-233
Radionuclide	Uranium-233	U-233

Radionuclide	Uranium-234	U-234
Radionuclide	Uranium-234	U-234
Radionuclide	Uranium-234	U-234
Radionuclide	Uranium-234	U-234
Radionuclide	Uranium-234	U-234
Radionuclide	Uranium-234	U-234
Radionuclide	Uranium-235	U-235
Radionuclide	Uranium-235	U-235
Radionuclide	Uranium-235	U-235
Radionuclide	Uranium-235	U-235
Radionuclide	Uranium-235	U-235
Radionuclide	Uranium-235	U-235
Radionuclide	Uranium-235	U-235
Radionuclide	Uranium-235	U-235
Radionuclide	Uranium-235	U-235
Radionuclide	Uranium-235	U-235
Radionuclide	Uranium-235	U-235
Radionuclide	Uranium-235	U-235
Radionuclide	Uranium-235	U-235
Radionuclide	Uranium-235	U-235
Radionuclide	Uranium-235	U-235
Radionuclide	Uranium-235	U-235
Radionuclide	Uranium-235	U-235
Radionuclide	Uranium-235	U-235
Radionuclide	Uranium-235	U-235
Radionuclide	Uranium-235	U-235
Radionuclide	Uranium-235	U-235
Radionuclide	Uranium-235	U-235
Radionuclide	Uranium-235	U-235
Radionuclide	Uranium-235	U-235
Radionuclide	Uranium-235	U-235
Radionuclide	Uranium-235	U-235
Radionuclide	Uranium-235	U-235
Radionuclide	Uranium-236	U-236
Radionuclide	Uranium-236	U-236
Radionuclide	Uranium-236	U-236
Radionuclide	Uranium-236	U-236
Radionuclide	Uranium-236	U-236
Radionuclide	Uranium-236	U-236
Radionuclide	Uranium-236	U-236
Radionuclide	Uranium-236	U-236

Radionuclide	Uranium-236	U-236
Radionuclide	Uranium-236	U-236
Radionuclide	Uranium-236	U-236

Radionuclide	Uranium-238	U-238
Radionuclide	Uranium-238	U-238
Radionuclide	Uranium-238	U-238
Semivolatile Organic compound	Benzoic Acid	65-85-0
Semivolatile Organic compound	Benzoic Acid	65-85-0
Semivolatile Organic compound	Benzoic Acid	65-85-0
Semivolatile Organic compound	Benzoic Acid	65-85-0
Semivolatile Organic compound	Benzoic Acid	65-85-0
Semivolatile Organic compound	Benzoic Acid	65-85-0
Semivolatile Organic compound	Benzoic Acid	65-85-0
Semivolatile Organic compound	Benzoic Acid	65-85-0
Semivolatile Organic compound	Benzoic Acid	65-85-0
Semivolatile Organic compound	Benzoic Acid	65-85-0
Semivolatile Organic compound	Benzoic Acid	65-85-0
Semivolatile Organic compound	Bis(2-ethylhexyl)phthalate	117-81-7
Semivolatile Organic compound	Bis(2-ethylhexyl)phthalate	117-81-7
Semivolatile Organic compound	Bis(2-ethylhexyl)phthalate	117-81-7
Semivolatile Organic compound	Bis(2-ethylhexyl)phthalate	117-81-7
Semivolatile Organic compound	Bis(2-ethylhexyl)phthalate	117-81-7
Semivolatile Organic compound	Bis(2-ethylhexyl)phthalate	117-81-7
Semivolatile Organic compound	Bis(2-ethylhexyl)phthalate	117-81-7
Semivolatile Organic compound	Bis(2-ethylhexyl)phthalate	117-81-7
Semivolatile Organic compound	Bis(2-ethylhexyl)phthalate	117-81-7
Semivolatile Organic compound	Bis(2-ethylhexyl)phthalate	117-81-7
Semivolatile Organic compound	Bis(2-ethylhexyl)phthalate	117-81-7
Semivolatile Organic compound	Bis(2-ethylhexyl)phthalate	117-81-7
Semivolatile Organic compound	Bis(2-ethylhexyl)phthalate	117-81-7
Semivolatile Organic compound	Bis(2-ethylhexyl)phthalate	117-81-7
Semivolatile Organic compound	Bis(2-ethylhexyl)phthalate	117-81-7
Semivolatile Organic compound	Bis(2-ethylhexyl)phthalate	117-81-7
Semivolatile Organic compound	Bis(2-ethylhexyl)phthalate	117-81-7
Semivolatile Organic compound	Bis(2-ethylhexyl)phthalate	117-81-7
Semivolatile Organic compound	Butyl Benzyl Phthalate	85-68-7
Semivolatile Organic compound	Butyl Benzyl Phthalate	85-68-7
Semivolatile Organic compound	Butyl Benzyl Phthalate	85-68-7
Semivolatile Organic compound	Butyl Benzyl Phthalate	85-68-7
Semivolatile Organic compound	Butyl Benzyl Phthalate	85-68-7
Semivolatile Organic compound	Butyl Benzyl Phthalate	85-68-7
Semivolatile Organic compound	Butyl Benzyl Phthalate	85-68-7
Semivolatile Organic compound	Butyl Benzyl Phthalate	85-68-7
Semivolatile Organic compound	Butyl Benzyl Phthalate	85-68-7
Semivolatile Organic compound	Butyl Benzyl Phthalate	85-68-7
Semivolatile Organic compound	Butyl Benzyl Phthalate	85-68-7
Semivolatile Organic compound	Butyl Benzyl Phthalate	85-68-7

Semivolatile Organic compound	Carbazole	86-74-8
Semivolatile Organic compound	Carbazole	86-74-8
Semivolatile Organic compound	Carbazole	86-74-8
Semivolatile Organic compound	Carbazole	86-74-8
Semivolatile Organic compound	Carbazole	86-74-8
Semivolatile Organic compound	Chlorobenzene	108-90-7
Semivolatile Organic compound	Chlorobenzene	108-90-7
Semivolatile Organic compound	Chlorobenzene	108-90-7
Semivolatile Organic compound	Chlorobenzene	108-90-7
Semivolatile Organic compound	Chlorobenzene	108-90-7
Semivolatile Organic compound	Chlorobenzene	108-90-7
Semivolatile Organic compound	Chlorobenzene	108-90-7
Semivolatile Organic compound	Chlorobenzene	108-90-7
Semivolatile Organic compound	Chlorobenzene	108-90-7
Semivolatile Organic compound	Chlorobenzene	108-90-7
Semivolatile Organic compound	Chlorobenzene	108-90-7
Semivolatile Organic compound	Chlorobenzene	108-90-7
Semivolatile Organic compound	Chlorophenol[2-]	95-57-8
Semivolatile Organic compound	Chlorophenol[2-]	95-57-8
Semivolatile Organic compound	Chlorophenol[2-]	95-57-8
Semivolatile Organic compound	Chlorophenol[2-]	95-57-8
Semivolatile Organic compound	Chlorophenol[2-]	95-57-8
Semivolatile Organic compound	Chlorophenol[2-]	95-57-8
Semivolatile Organic compound	Chlorophenol[2-]	95-57-8
Semivolatile Organic compound	Chlorophenol[2-]	95-57-8
Semivolatile Organic compound	Chlorophenol[2-]	95-57-8
Semivolatile Organic compound	Chlorophenol[2-]	95-57-8
Semivolatile Organic compound	Chlorophenol[2-]	95-57-8
Semivolatile Organic compound	Chlorophenol[2-]	95-57-8
Semivolatile Organic compound	Chlorophenol[2-]	95-57-8
Semivolatile Organic compound	Chlorophenol[2-]	95-57-8
Semivolatile Organic compound	Chlorophenol[2-]	95-57-8
Semivolatile Organic compound	Chlorophenol[2-]	95-57-8
Semivolatile Organic compound	Chlorophenol[2-]	95-57-8
Semivolatile Organic compound	Chlorophenol[2-]	95-57-8
Semivolatile Organic compound	Chlorophenol[2-]	95-57-8
Semivolatile Organic compound	Dibenzofuran	132-64-9
Semivolatile Organic compound	Dibenzofuran	132-64-9
Semivolatile Organic compound	Dibenzofuran	132-64-9
Semivolatile Organic compound	Diethyl Phthalate	84-66-2
Semivolatile Organic compound	Diethyl Phthalate	84-66-2
Semivolatile Organic compound	Diethyl Phthalate	84-66-2
Semivolatile Organic compound	Diethyl Phthalate	84-66-2
Semivolatile Organic compound	Diethyl Phthalate	84-66-2

Semivolatile Organic compound	Diethyl Phthalate	84-66-2
Semivolatile Organic compound	Dimethyl Phthalate	131-11-3
Semivolatile Organic compound	Dimethyl Phthalate	131-11-3
Semivolatile Organic compound	Dimethyl Phthalate	131-11-3
Semivolatile Organic compound	Dimethyl Phthalate	131-11-3
Semivolatile Organic compound	Dimethyl Phthalate	131-11-3
Semivolatile Organic compound	Dimethyl Phthalate	131-11-3
Semivolatile Organic compound	Dimethyl Phthalate	131-11-3
Semivolatile Organic compound	Dimethyl Phthalate	131-11-3
Semivolatile Organic compound	Dimethyl Phthalate	131-11-3
Semivolatile Organic compound	Dimethyl Phthalate	131-11-3
Semivolatile Organic compound	Dimethyl Phthalate	131-11-3
Semivolatile Organic compound	Di-n-Butyl Phthalate	84-74-2
Semivolatile Organic compound	Di-n-Butyl Phthalate	84-74-2
Semivolatile Organic compound	Di-n-Butyl Phthalate	84-74-2
Semivolatile Organic compound	Di-n-Butyl Phthalate	84-74-2
Semivolatile Organic compound	Di-n-Butyl Phthalate	84-74-2
Semivolatile Organic compound	Di-n-Butyl Phthalate	84-74-2
Semivolatile Organic compound	Di-n-Butyl Phthalate	84-74-2
Semivolatile Organic compound	Di-n-Butyl Phthalate	84-74-2
Semivolatile Organic compound	Di-n-Butyl Phthalate	84-74-2
Semivolatile Organic compound	Di-n-Butyl Phthalate	84-74-2
Semivolatile Organic compound	Di-n-Butyl Phthalate	84-74-2
Semivolatile Organic compound	Di-n-Butyl Phthalate	84-74-2
Semivolatile Organic compound	Di-n-Butyl Phthalate	84-74-2
Semivolatile Organic compound	Di-n-Butyl Phthalate	84-74-2
Semivolatile Organic compound	Di-n-Butyl Phthalate	84-74-2
Semivolatile Organic compound	Di-n-Butyl Phthalate	84-74-2
Semivolatile Organic compound	Di-n-Butyl Phthalate	84-74-2
Semivolatile Organic compound	Di-n-Butyl Phthalate	84-74-2
Semivolatile Organic compound	Di-n-Butyl Phthalate	84-74-2
Semivolatile Organic compound	Di-n-Butyl Phthalate	84-74-2
Semivolatile Organic compound	Di-n-Butyl Phthalate	84-74-2
Semivolatile Organic compound	Di-n-octylphthalate	117-84-0
Semivolatile Organic compound	Di-n-octylphthalate	117-84-0
Semivolatile Organic compound	Di-n-octylphthalate	117-84-0
Semivolatile Organic compound	Di-n-octylphthalate	117-84-0
Semivolatile Organic compound	Di-n-octylphthalate	117-84-0
Semivolatile Organic compound	Di-n-octylphthalate	117-84-0
Semivolatile Organic compound	Di-n-octylphthalate	117-84-0
Semivolatile Organic compound	Di-n-octylphthalate	117-84-0
Semivolatile Organic compound	Di-n-octylphthalate	117-84-0
Semivolatile Organic compound	Di-n-octylphthalate	117-84-0
Semivolatile Organic compound	Di-n-octylphthalate	117-84-0
Semivolatile Organic compound	Methylphenol[2-]	95-48-7

Semivolatile Organic compound	Methylphenol[2-]	95-48-7
Semivolatile Organic compound	Methylphenol[2-]	95-48-7
Semivolatile Organic compound	Methylphenol[2-]	95-48-7
Semivolatile Organic compound	Methylphenol[2-]	95-48-7
Semivolatile Organic compound	Methylphenol[2-]	95-48-7
Semivolatile Organic compound	Methylphenol[3-]	108-39-4
Semivolatile Organic compound	Nitroaniline[2-]	88-74-4
Semivolatile Organic compound	Nitroaniline[2-]	88-74-4
Semivolatile Organic compound	Nitroaniline[2-]	88-74-4
Semivolatile Organic compound	Nitroaniline[2-]	88-74-4
Semivolatile Organic compound	Nitroaniline[2-]	88-74-4
Semivolatile Organic compound	Nitrobenzene	98-95-3
Semivolatile Organic compound	Nitrobenzene	98-95-3
Semivolatile Organic compound	Nitrobenzene	98-95-3
Semivolatile Organic compound	Nitrobenzene	98-95-3
Semivolatile Organic compound	Nitrobenzene	98-95-3
Semivolatile Organic compound	Nitrobenzene	98-95-3
Semivolatile Organic compound	Nitrobenzene	98-95-3
Semivolatile Organic compound	Nitrobenzene	98-95-3
Semivolatile Organic compound	Nitrobenzene	98-95-3
Semivolatile Organic compound	Nitrobenzene	98-95-3
Semivolatile Organic compound	Nitrobenzene	98-95-3
Semivolatile Organic compound	Nitrobenzene	98-95-3
Semivolatile Organic compound	Pentachloronitrobenzene	82-68-8
Semivolatile Organic compound	Pentachloronitrobenzene	82-68-8
Semivolatile Organic compound	Pentachloronitrobenzene	82-68-8
Semivolatile Organic compound	Pentachloronitrobenzene	82-68-8
Semivolatile Organic compound	Pentachloronitrobenzene	82-68-8
Semivolatile Organic compound	Pentachloronitrobenzene	82-68-8
Semivolatile Organic compound	Pentachloronitrobenzene	82-68-8
Semivolatile Organic compound	Pentachloronitrobenzene	82-68-8
Semivolatile Organic compound	Pentachloronitrobenzene	82-68-8
Semivolatile Organic compound	Pentachloronitrobenzene	82-68-8
Semivolatile Organic compound	Pentachloronitrobenzene	82-68-8
Semivolatile Organic compound	Pentachloronitrobenzene	82-68-8
Semivolatile Organic compound	Pentachloronitrobenzene	82-68-8
Semivolatile Organic compound	Pentachloronitrobenzene	82-68-8
Semivolatile Organic compound	Pentachloronitrobenzene	82-68-8
Semivolatile Organic compound	Pentachloronitrobenzene	82-68-8
Semivolatile Organic compound	Pentachloronitrobenzene	82-68-8
Semivolatile Organic compound	Pentachloronitrobenzene	82-68-8
Semivolatile Organic compound	Pentachloronitrobenzene	82-68-8
Semivolatile Organic compound	Pentachloronitrobenzene	82-68-8
Semivolatile Organic compound	Pentachlorophenol	87-86-5
Semivolatile Organic compound	Pentachlorophenol	87-86-5
Semivolatile Organic compound	Pentachlorophenol	87-86-5

Semivolatile Organic compound	Pentachlorophenol	87-86-5
Semivolatile Organic compound	Pentachlorophenol	87-86-5
Semivolatile Organic compound	Pentachlorophenol	87-86-5
Semivolatile Organic compound	Pentachlorophenol	87-86-5
Semivolatile Organic compound	Pentachlorophenol	87-86-5
Semivolatile Organic compound	Pentachlorophenol	87-86-5
Semivolatile Organic compound	Pentachlorophenol	87-86-5
Semivolatile Organic compound	Pentachlorophenol	87-86-5
Semivolatile Organic compound	Pentachlorophenol	87-86-5
Semivolatile Organic compound	Pentachlorophenol	87-86-5
Semivolatile Organic compound	Pentachlorophenol	87-86-5
Semivolatile Organic compound	Pentachlorophenol	87-86-5
Semivolatile Organic compound	Pentachlorophenol	87-86-5
Semivolatile Organic compound	Pentachlorophenol	87-86-5
Semivolatile Organic compound	Pentachlorophenol	87-86-5
Semivolatile Organic compound	Pentachlorophenol	87-86-5
Semivolatile Organic compound	Pentachlorophenol	87-86-5
Semivolatile Organic compound	Pentachlorophenol	87-86-5
Semivolatile Organic compound	Phenol	108-95-2
Semivolatile Organic compound	Phenol	108-95-2
Semivolatile Organic compound	Phenol	108-95-2
Semivolatile Organic compound	Phenol	108-95-2
Semivolatile Organic compound	Phenol	108-95-2
Semivolatile Organic compound	Phenol	108-95-2
Semivolatile Organic compound	Phenol	108-95-2
Semivolatile Organic compound	Phenol	108-95-2
Semivolatile Organic compound	Phenol	108-95-2
Semivolatile Organic compound	Phenol	108-95-2
Semivolatile Organic compound	Phenol	108-95-2
Semivolatile Organic compound	Phenol	108-95-2
Volatile Organic Compound	Acetone	67-64-1
Volatile Organic Compound	Acetone	67-64-1
Volatile Organic Compound	Acetone	67-64-1
Volatile Organic Compound	Acetone	67-64-1
Volatile Organic Compound	Acetone	67-64-1
Volatile Organic Compound	Acetone	67-64-1
Volatile Organic Compound	Acetone	67-64-1
Volatile Organic Compound	Acetone	67-64-1
Volatile Organic Compound	Acetone	67-64-1
Volatile Organic Compound	Acetone	67-64-1
Volatile Organic Compound	Acetone	67-64-1
Volatile Organic Compound	Acetone	67-64-1
Volatile Organic Compound	Acetone	67-64-1

Volatile Organic Compound	Acetone	67-64-1
Volatile Organic Compound	Acetone	67-64-1
Volatile Organic Compound	Acetone	67-64-1
Volatile Organic Compound	Acetone	67-64-1
Volatile Organic Compound	Acetone	67-64-1
Volatile Organic Compound	Acetone	67-64-1
Volatile Organic Compound	Acetone	67-64-1
Volatile Organic Compound	Acetone	67-64-1
Volatile Organic Compound	Benzene	71-43-2
Volatile Organic Compound	Benzene	71-43-2
Volatile Organic Compound	Benzene	71-43-2
Volatile Organic Compound	Benzene	71-43-2
Volatile Organic Compound	Benzene	71-43-2
Volatile Organic Compound	Benzene	71-43-2
Volatile Organic Compound	Benzene	71-43-2
Volatile Organic Compound	Benzene	71-43-2
Volatile Organic Compound	Benzene	71-43-2
Volatile Organic Compound	Benzene	71-43-2
Volatile Organic Compound	Benzene	71-43-2
Volatile Organic Compound	Benzene	71-43-2
Volatile Organic Compound	Benzene	71-43-2
Volatile Organic Compound	Benzyl Alcohol	100-51-6
Volatile Organic Compound	Benzyl Alcohol	100-51-6
Volatile Organic Compound	Benzyl Alcohol	100-51-6
Volatile Organic Compound	Benzyl Alcohol	100-51-6
Volatile Organic Compound	Benzyl Alcohol	100-51-6
Volatile Organic Compound	Butanone[2-]	78-93-3
Volatile Organic Compound	Butanone[2-]	78-93-3
Volatile Organic Compound	Butanone[2-]	78-93-3
Volatile Organic Compound	Butanone[2-]	78-93-3
Volatile Organic Compound	Butanone[2-]	78-93-3
Volatile Organic Compound	Butanone[2-]	78-93-3
Volatile Organic Compound	Butanone[2-]	78-93-3
Volatile Organic Compound	Butanone[2-]	78-93-3
Volatile Organic Compound	Butanone[2-]	78-93-3
Volatile Organic Compound	Butanone[2-]	78-93-3
Volatile Organic Compound	Carbon Disulfide	75-15-0
Volatile Organic Compound	Carbon Disulfide	75-15-0
Volatile Organic Compound	Carbon Disulfide	75-15-0
Volatile Organic Compound	Carbon Disulfide	75-15-0
Volatile Organic Compound	Carbon Disulfide	75-15-0
Volatile Organic Compound	Carbon Tetrachloride	56-23-5
Volatile Organic Compound	Chloroaniline[4-]	106-47-8
Volatile Organic Compound	Chloroaniline[4-]	106-47-8
Volatile Organic Compound	Chloroform	67-66-3
Volatile Organic Compound	Chloroform	67-66-3

Volatile Organic Compound	Chloroform	67-66-3
Volatile Organic Compound	Chloroform	67-66-3
Volatile Organic Compound	Chloroform	67-66-3
Volatile Organic Compound	Chloroform	67-66-3
Volatile Organic Compound	Chloroform	67-66-3
Volatile Organic Compound	Chloroform	67-66-3
Volatile Organic Compound	Chloroform	67-66-3
Volatile Organic Compound	Chloroform	67-66-3
Volatile Organic Compound	Chloroform	67-66-3
Volatile Organic Compound	Chloroform	67-66-3
Volatile Organic Compound	Chloromethane	74-87-3
Volatile Organic Compound	Dichlorobenzene[1,2-]	95-50-1
Volatile Organic Compound	Dichlorobenzene[1,2-]	95-50-1
Volatile Organic Compound	Dichlorobenzene[1,2-]	95-50-1
Volatile Organic Compound	Dichlorobenzene[1,2-]	95-50-1
Volatile Organic Compound	Dichlorobenzene[1,2-]	95-50-1
Volatile Organic Compound	Dichlorobenzene[1,3-]	541-73-1
Volatile Organic Compound	Dichlorobenzene[1,3-]	541-73-1
Volatile Organic Compound	Dichlorobenzene[1,3-]	541-73-1
Volatile Organic Compound	Dichlorobenzene[1,3-]	541-73-1
Volatile Organic Compound	Dichlorobenzene[1,3-]	541-73-1
Volatile Organic Compound	Dichlorobenzene[1,4-]	106-46-7
Volatile Organic Compound	Dichlorobenzene[1,4-]	106-46-7
Volatile Organic Compound	Dichlorobenzene[1,4-]	106-46-7
Volatile Organic Compound	Dichlorobenzene[1,4-]	106-46-7
Volatile Organic Compound	Dichlorobenzene[1,4-]	106-46-7
Volatile Organic Compound	Dichlorobenzene[1,4-]	106-46-7
Volatile Organic Compound	Dichlorobenzene[1,4-]	106-46-7
Volatile Organic Compound	Dichlorobenzene[1,4-]	106-46-7
Volatile Organic Compound	Dichlorobenzene[1,4-]	106-46-7
Volatile Organic Compound	Dichlorobenzene[1,4-]	106-46-7
Volatile Organic Compound	Dichlorobenzene[1,4-]	106-46-7
Volatile Organic Compound	Dichlorobenzene[1,4-]	106-46-7
Volatile Organic Compound	Dichlorodifluoromethane	75-71-8
Volatile Organic Compound	Dichloroethane[1,1-]	75-34-3
Volatile Organic Compound	Dichloroethane[1,1-]	75-34-3
Volatile Organic Compound	Dichloroethane[1,1-]	75-34-3
Volatile Organic Compound	Dichloroethane[1,1-]	75-34-3
Volatile Organic Compound	Dichloroethane[1,1-]	75-34-3
Volatile Organic Compound	Dichloroethane[1,1-]	75-34-3
Volatile Organic Compound	Dichloroethane[1,1-]	75-34-3
Volatile Organic Compound	Dichloroethane[1,1-]	75-34-3
Volatile Organic Compound	Dichloroethane[1,1-]	75-34-3
Volatile Organic Compound	Dichloroethane[1,1-]	75-34-3
Volatile Organic Compound	Dichloroethane[1,1-]	75-34-3
Volatile Organic Compound	Dichloroethane[1,1-]	75-34-3

Volatile Organic Compound	Dichloroethane[1,1-]	75-34-3
Volatile Organic Compound	Dichloroethane[1,2-]	107-06-2
Volatile Organic Compound	Dichloroethane[1,2-]	107-06-2
Volatile Organic Compound	Dichloroethane[1,2-]	107-06-2
Volatile Organic Compound	Dichloroethane[1,2-]	107-06-2
Volatile Organic Compound	Dichloroethane[1,2-]	107-06-2
Volatile Organic Compound	Dichloroethane[1,2-]	107-06-2
Volatile Organic Compound	Dichloroethane[1,2-]	107-06-2
Volatile Organic Compound	Dichloroethane[1,2-]	107-06-2
Volatile Organic Compound	Dichloroethane[1,2-]	107-06-2
Volatile Organic Compound	Dichloroethane[1,2-]	107-06-2
Volatile Organic Compound	Dichloroethane[1,2-]	107-06-2
Volatile Organic Compound	Dichloroethane[1,2-]	107-06-2
Volatile Organic Compound	Dichloroethane[1,2-]	107-06-2
Volatile Organic Compound	Dichloroethane[1,2-]	107-06-2
Volatile Organic Compound	Dichloroethane[1,2-]	107-06-2
Volatile Organic Compound	Dichloroethane[1,2-]	107-06-2
Volatile Organic Compound	Dichloroethane[1,2-]	107-06-2
Volatile Organic Compound	Dichloroethane[1,2-]	107-06-2
Volatile Organic Compound	Dichloroethane[1,2-]	107-06-2
Volatile Organic Compound	Dichloroethane[1,2-]	107-06-2
Volatile Organic Compound	Dichloroethane[1,2-]	107-06-2
Volatile Organic Compound	Dichloroethene[1,1-]	75-35-4
Volatile Organic Compound	Dichloroethene[1,1-]	75-35-4
Volatile Organic Compound	Dichloroethene[1,1-]	75-35-4
Volatile Organic Compound	Dichloroethene[1,1-]	75-35-4
Volatile Organic Compound	Dichloroethene[1,1-]	75-35-4
Volatile Organic Compound	Dichloroethene[1,1-]	75-35-4
Volatile Organic Compound	Dichloroethene[1,1-]	75-35-4
Volatile Organic Compound	Dichloroethene[1,1-]	75-35-4
Volatile Organic Compound	Dichloroethene[1,1-]	75-35-4
Volatile Organic Compound	Dichloroethene[1,1-]	75-35-4
Volatile Organic Compound	Dichloroethene[1,1-]	75-35-4
Volatile Organic Compound	Dichloroethene[1,1-]	75-35-4
Volatile Organic Compound	Dichloroethene[1,1-]	75-35-4
Volatile Organic Compound	Dichloroethene[cis/trans-1,2-]	540-59-0
Volatile Organic Compound	Dichloroethene[cis/trans-1,2-]	540-59-0
Volatile Organic Compound	Dichloroethene[cis/trans-1,2-]	540-59-0
Volatile Organic Compound	Dichloroethene[cis/trans-1,2-]	540-59-0
Volatile Organic Compound	Dichloroethene[cis/trans-1,2-]	540-59-0
Volatile Organic Compound	Dichloroethene[cis/trans-1,2-]	540-59-0
Volatile Organic Compound	Dichloroethene[cis/trans-1,2-]	540-59-0
Volatile Organic Compound	Dichloroethene[cis/trans-1,2-]	540-59-0
Volatile Organic Compound	Dichloroethene[cis/trans-1,2-]	540-59-0
Volatile Organic Compound	Dichloroethene[cis/trans-1,2-]	540-59-0
Volatile Organic Compound	Dichloroethene[cis/trans-1,2-]	540-59-0

Volatile Organic Compound	Diphenylamine	122-39-4
Volatile Organic Compound	Diphenylamine	122-39-4
Volatile Organic Compound	Diphenylamine	122-39-4
Volatile Organic Compound	Diphenylamine	122-39-4
Volatile Organic Compound	Diphenylamine	122-39-4
Volatile Organic Compound	Diphenylamine	122-39-4
Volatile Organic Compound	Hexachlorobenzene	118-74-1
Volatile Organic Compound	Hexachlorobenzene	118-74-1
Volatile Organic Compound	Hexachlorobenzene	118-74-1
Volatile Organic Compound	Hexachlorobenzene	118-74-1
Volatile Organic Compound	Hexachlorobenzene	118-74-1
Volatile Organic Compound	Hexachlorobenzene	118-74-1
Volatile Organic Compound	Hexachlorobenzene	118-74-1
Volatile Organic Compound	Hexachlorobenzene	118-74-1
Volatile Organic Compound	Hexachlorobenzene	118-74-1
Volatile Organic Compound	Hexachlorobenzene	118-74-1
Volatile Organic Compound	Hexachlorobenzene	118-74-1
Volatile Organic Compound	Hexachlorobenzene	118-74-1
Volatile Organic Compound	Hexachlorobenzene	118-74-1
Volatile Organic Compound	Hexanone[2-]	591-78-6
Volatile Organic Compound	Hexanone[2-]	591-78-6
Volatile Organic Compound	Hexanone[2-]	591-78-6
Volatile Organic Compound	Hexanone[2-]	591-78-6
Volatile Organic Compound	Hexanone[2-]	591-78-6
Volatile Organic Compound	Hexanone[2-]	591-78-6
Volatile Organic Compound	Hexanone[2-]	591-78-6
Volatile Organic Compound	Hexanone[2-]	591-78-6
Volatile Organic Compound	Hexanone[2-]	591-78-6
Volatile Organic Compound	Hexanone[2-]	591-78-6
Volatile Organic Compound	Hexanone[2-]	591-78-6
Volatile Organic Compound	Iodomethane	74-88-4
Volatile Organic Compound	Iodomethane	74-88-4
Volatile Organic Compound	Iodomethane	74-88-4
Volatile Organic Compound	Iodomethane	74-88-4
Volatile Organic Compound	Iodomethane	74-88-4
Volatile Organic Compound	Iodomethane	74-88-4
Volatile Organic Compound	Methyl-2-pentanone[4-]	108-10-1
Volatile Organic Compound	Methyl-2-pentanone[4-]	108-10-1
Volatile Organic Compound	Methyl-2-pentanone[4-]	108-10-1
Volatile Organic Compound	Methyl-2-pentanone[4-]	108-10-1
Volatile Organic Compound	Methyl-2-pentanone[4-]	108-10-1
Volatile Organic Compound	Methylene Chloride	75-09-2
Volatile Organic Compound	Methylene Chloride	75-09-2
Volatile Organic Compound	Methylene Chloride	75-09-2
Volatile Organic Compound	Methylene Chloride	75-09-2
Volatile Organic Compound	Methylene Chloride	75-09-2
Volatile Organic Compound	Methylene Chloride	75-09-2

Volatile Organic Compound	Methylene Chloride	75-09-2
Volatile Organic Compound	Methylene Chloride	75-09-2
Volatile Organic Compound	Methylene Chloride	75-09-2
Volatile Organic Compound	Methylene Chloride	75-09-2
Volatile Organic Compound	Methylene Chloride	75-09-2
Volatile Organic Compound	Methylene Chloride	75-09-2
Volatile Organic Compound	Methylene Chloride	75-09-2
Volatile Organic Compound	Methylene Chloride	75-09-2
Volatile Organic Compound	Styrene	100-42-5
Volatile Organic Compound	Styrene	100-42-5
Volatile Organic Compound	Tetrachloroethene	127-18-4
Volatile Organic Compound	Tetrachloroethene	127-18-4
Volatile Organic Compound	Tetrachloroethene	127-18-4
Volatile Organic Compound	Tetrachloroethene	127-18-4
Volatile Organic Compound	Tetrachloroethene	127-18-4
Volatile Organic Compound	Tetrachloroethene	127-18-4
Volatile Organic Compound	Tetrachloroethene	127-18-4
Volatile Organic Compound	Tetrachloroethene	127-18-4
Volatile Organic Compound	Tetrachloroethene	127-18-4
Volatile Organic Compound	Tetrachloroethene	127-18-4
Volatile Organic Compound	Tetrachloroethene	127-18-4
Volatile Organic Compound	Tetrachloroethene	127-18-4
Volatile Organic Compound	Tetrachloroethene	127-18-4
Volatile Organic Compound	Toluene	108-88-3
Volatile Organic Compound	Toluene	108-88-3
Volatile Organic Compound	Toluene	108-88-3
Volatile Organic Compound	Toluene	108-88-3
Volatile Organic Compound	Toluene	108-88-3
Volatile Organic Compound	Toluene	108-88-3
Volatile Organic Compound	Toluene	108-88-3
Volatile Organic Compound	Toluene	108-88-3
Volatile Organic Compound	Toluene	108-88-3
Volatile Organic Compound	Toluene	108-88-3
Volatile Organic Compound	Toluene	108-88-3
Volatile Organic Compound	Toluene	108-88-3
Volatile Organic Compound	Toluene	108-88-3
Volatile Organic Compound	Trichlorobenzene[1,2,4-]	120-82-1
Volatile Organic Compound	Trichlorobenzene[1,2,4-]	120-82-1
Volatile Organic Compound	Trichlorobenzene[1,2,4-]	120-82-1
Volatile Organic Compound	Trichlorobenzene[1,2,4-]	120-82-1
Volatile Organic Compound	Trichlorobenzene[1,2,4-]	120-82-1
Volatile Organic Compound	Trichlorobenzene[1,2,4-]	120-82-1
Volatile Organic Compound	Trichlorobenzene[1,2,4-]	120-82-1
Volatile Organic Compound	Trichlorobenzene[1,2,4-]	120-82-1
Volatile Organic Compound	Trichlorobenzene[1,2,4-]	120-82-1

Volatile Organic Compound	Trichlorobenzene[1,2,4-]	120-82-1
Volatile Organic Compound	Trichlorobenzene[1,2,4-]	120-82-1
Volatile Organic Compound	Trichlorobenzene[1,2,4-]	120-82-1
Volatile Organic Compound	Trichlorobenzene[1,2,4-]	120-82-1
Volatile Organic Compound	Trichloroethane[1,1,1-]	71-55-6

Volatile Organic Compound	Xylene (Total)	1330-20-7
Volatile Organic Compound	Xylene (Total)	1330-20-7
Volatile Organic Compound	Xylene (Total)	1330-20-7
Volatile Organic Compound	Xylene (Total)	1330-20-7
Volatile Organic Compound	Xylene (Total)	1330-20-7
Volatile Organic Compound	Xylene (Total)	1330-20-7
Volatile Organic Compound	Xylene (Total)	1330-20-7
Volatile Organic Compound	Xylene (Total)	1330-20-7
Volatile Organic Compound	Xylene (Total)	1330-20-7
Volatile Organic Compound	Xylene (Total)	1330-20-7
Volatile Organic Compound	Xylene (Total)	1330-20-7
Volatile Organic Compound	Xylene (Total)	1330-20-7
Volatile Organic Compound	Xylene (Total)	1330-20-7
Volatile Organic Compound	Xylene (Total)	1330-20-7
Volatile Organic Compound	Xylene (Total)	1330-20-7
Volatile Organic Compound	Xylene (Total)	1330-20-7
Volatile Organic Compound	Xylene (Total)	1330-20-7

ESL Medium	ESL Receptor	No Effect ESL
SEDIMENT	Aquatic community organisms - sediment	0.00000085
SEDIMENT	Occult little brown myotis bat (Mammalian aerial insectivore)	0.00000036
SOIL	Deer mouse (Mammalian omnivore)	0.00000058
SOIL	Desert cottontail (Mammalian herbivore)	0.000048
SOIL	Earthworm (Soil-dwelling invertebrate)	5
SOIL	Montane shrew (Mammalian insectivore)	0.00000029
SOIL	Red fox (Mammalian top carnivore)	0.0000012
WATER	Aquatic community organisms - water	0.000002
WATER	Deer mouse (water)	0.0052
WATER	Desert cottontail (water)	0.01
WATER	Montane shrew (water)	0.0044
WATER	Occult little brown myotis bat (water)	0.0062
WATER	Red fox (water)	0.011
SEDIMENT	Occult little brown myotis bat (Mammalian aerial insectivore)	9.5
SOIL	Deer mouse (Mammalian omnivore)	3.6
SOIL	Desert cottontail (Mammalian herbivore)	5.2
SOIL	Generic plant (Terrestrial autotroph - producer)	80
SOIL	Montane shrew (Mammalian insectivore)	7.6
SOIL	Red fox (Mammalian top carnivore)	1600
WATER	Deer mouse (water)	50000
WATER	Desert cottontail (water)	98000
WATER	Montane shrew (water)	43000
WATER	Occult little brown myotis bat (water)	60000
WATER	Red fox (water)	110000
SEDIMENT	Occult little brown myotis bat (Mammalian aerial insectivore)	34
SOIL	Deer mouse (Mammalian omnivore)	10
SOIL	Desert cottontail (Mammalian herbivore)	14
SOIL	Generic plant (Terrestrial autotroph - producer)	80
SOIL	Montane shrew (Mammalian insectivore)	27
SOIL	Red fox (Mammalian top carnivore)	3700
WATER	Deer mouse (water)	73000
WATER	Desert cottontail (water)	140000
WATER	Montane shrew (water)	62000
WATER	Occult little brown myotis bat (water)	87000
WATER	Red fox (water)	160000
SEDIMENT	Occult little brown myotis bat (Mammalian aerial insectivore)	1.2
SEDIMENT	Violet-green Swallow (Avian aerial insectivore)	2.7
SOIL	American kestrel (Avian intermediate carnivore)	12
SOIL	American kestrel (Avian top carnivore)	62
SOIL	American robin (Avian herbivore)	0.079
SOIL	American robin (Avian insectivore)	1.7
SOIL	American robin (Avian omnivore)	0.15
SOIL	Deer mouse (Mammalian omnivore)	0.073
SOIL	Desert cottontail (Mammalian herbivore)	0.083

SOIL	Montane shrew (Mammalian insectivore)	0.84
SOIL	Red fox (Mammalian top carnivore)	32
WATER	American kestrel (water)	3500
WATER	American robin (water)	3000
WATER	Aquatic community organisms - water	16
WATER	Deer mouse (water)	590
WATER	Desert cottontail (water)	1100
WATER	Montane shrew (water)	500
WATER	Occult little brown myotis bat (water)	710
WATER	Red fox (water)	1300
WATER	Violet-green Swallow (water)	1700
SEDIMENT	Aquatic community organisms - sediment	0.29
SEDIMENT	Occult little brown myotis bat (Mammalian aerial insectivore)	18
SOIL	Deer mouse (Mammalian omnivore)	2.5
SOIL	Desert cottontail (Mammalian herbivore)	3.1
SOIL	Montane shrew (Mammalian insectivore)	13
SOIL	Red fox (Mammalian top carnivore)	760
WATER	Aquatic community organisms - water	65
WATER	Deer mouse (water)	14000
WATER	Desert cottontail (water)	27000
WATER	Montane shrew (water)	12000
WATER	Occult little brown myotis bat (water)	16000
WATER	Red fox (water)	31000
SEDIMENT	Occult little brown myotis bat (Mammalian aerial insectivore)	9.7
SOIL	Deer mouse (Mammalian omnivore)	1.8
SOIL	Desert cottontail (Mammalian herbivore)	2.3
SOIL	Montane shrew (Mammalian insectivore)	7.1
SOIL	Red fox (Mammalian top carnivore)	580
WATER	Aquatic community organisms - water	230
WATER	Deer mouse (water)	9300
WATER	Desert cottontail (water)	18000
WATER	Montane shrew (water)	7900
WATER	Occult little brown myotis bat (water)	11000
WATER	Red fox (water)	20000
SEDIMENT	Occult little brown myotis bat (Mammalian aerial insectivore)	27000
SOIL	Deer mouse (Mammalian omnivore)	27
SOIL	Desert cottontail (Mammalian herbivore)	29
SOIL	Earthworm (Soil-dwelling invertebrate)	140
SOIL	Generic plant (Terrestrial autotroph - producer)	2700
SOIL	Montane shrew (Mammalian insectivore)	3100
SOIL	Red fox (Mammalian top carnivore)	29000
WATER	Deer mouse (water)	390000
WATER	Desert cottontail (water)	770000
WATER	Montane shrew (water)	330000
WATER	Occult little brown myotis bat (water)	470000
WATER	Red fox (water)	870000
SEDIMENT	Occult little brown myotis bat (Mammalian aerial insectivore)	1700

SOIL	Deer mouse (Mammalian omnivore)	71
SOIL	Desert cottontail (Mammalian herbivore)	80
SOIL	Montane shrew (Mammalian insectivore)	1000
SOIL	Red fox (Mammalian top carnivore)	28000
WATER	Deer mouse (water)	500000
WATER	Desert cottontail (water)	990000
WATER	Montane shrew (water)	430000
WATER	Occult little brown myotis bat (water)	600000
WATER	Red fox (water)	1100000
SEDIMENT	Occult little brown myotis bat (Mammalian aerial insectivore)	28
SOIL	Deer mouse (Mammalian omnivore)	9.9
SOIL	Desert cottontail (Mammalian herbivore)	14
SOIL	Montane shrew (Mammalian insectivore)	21
SOIL	Red fox (Mammalian top carnivore)	2500
WATER	Deer mouse (water)	46000
WATER	Desert cottontail (water)	91000
WATER	Montane shrew (water)	39000
WATER	Occult little brown myotis bat (water)	56000
WATER	Red fox (water)	100000
SEDIMENT	Occult little brown myotis bat (Mammalian aerial insectivore)	24
SOIL	Deer mouse (Mammalian omnivore)	12
SOIL	Desert cottontail (Mammalian herbivore)	19
SOIL	Montane shrew (Mammalian insectivore)	19
SOIL	Red fox (Mammalian top carnivore)	2700
WATER	Deer mouse (water)	56000
WATER	Desert cottontail (water)	110000
WATER	Montane shrew (water)	47000
WATER	Occult little brown myotis bat (water)	67000
WATER	Red fox (water)	120000
SEDIMENT	Occult little brown myotis bat (Mammalian aerial insectivore)	52
SOIL	Deer mouse (Mammalian omnivore)	22
SOIL	Desert cottontail (Mammalian herbivore)	32
SOIL	Montane shrew (Mammalian insectivore)	40
SOIL	Red fox (Mammalian top carnivore)	5600
WATER	Deer mouse (water)	100000
WATER	Desert cottontail (water)	200000
WATER	Montane shrew (water)	87000
WATER	Occult little brown myotis bat (water)	120000
WATER	Red fox (water)	220000
SEDIMENT	Occult little brown myotis bat (Mammalian aerial insectivore)	1400
SOIL	Deer mouse (Mammalian omnivore)	100
SOIL	Desert cottontail (Mammalian herbivore)	110
SOIL	Montane shrew (Mammalian insectivore)	870
SOIL	Red fox (Mammalian top carnivore)	7600
WATER	Deer mouse (water)	360000
WATER	Desert cottontail (water)	720000
WATER	Montane shrew (water)	310000

WATER	Occult little brown myotis bat (water)	440000
WATER	Red fox (water)	810000
SEDIMENT	Occult little brown myotis bat (Mammalian aerial insectivore)	290
SEDIMENT	Violet-green Swallow (Avian aerial insectivore)	45
SOIL	American kestrel (Avian intermediate carnivore)	200
SOIL	American kestrel (Avian top carnivore)	1100
SOIL	American robin (Avian herbivore)	12
SOIL	American robin (Avian insectivore)	22
SOIL	American robin (Avian omnivore)	16
SOIL	Deer mouse (Mammalian omnivore)	130
SOIL	Desert cottontail (Mammalian herbivore)	210
SOIL	Earthworm (Soil-dwelling invertebrate)	7.5
SOIL	Montane shrew (Mammalian insectivore)	150
SOIL	Red fox (Mammalian top carnivore)	6800
WATER	Deer mouse (water)	52000
WATER	Desert cottontail (water)	100000
WATER	Montane shrew (water)	44000
WATER	Occult little brown myotis bat (water)	62000
WATER	Red fox (water)	110000
SEDIMENT	Occult little brown myotis bat (Mammalian aerial insectivore)	100
SOIL	Deer mouse (Mammalian omnivore)	0.99
SOIL	Desert cottontail (Mammalian herbivore)	1.1
SOIL	Montane shrew (Mammalian insectivore)	35
SOIL	Red fox (Mammalian top carnivore)	370
WATER	Deer mouse (water)	6800
WATER	Desert cottontail (water)	13000
WATER	Montane shrew (water)	5800
WATER	Occult little brown myotis bat (water)	8100
WATER	Red fox (water)	15000
SEDIMENT	Occult little brown myotis bat (Mammalian aerial insectivore)	1300
SOIL	Deer mouse (Mammalian omnivore)	6.6
SOIL	Desert cottontail (Mammalian herbivore)	7.3
SOIL	Montane shrew (Mammalian insectivore)	400
SOIL	Red fox (Mammalian top carnivore)	3900
WATER	Deer mouse (water)	70000
WATER	Desert cottontail (water)	130000
WATER	Montane shrew (water)	60000
WATER	Occult little brown myotis bat (water)	84000
WATER	Red fox (water)	150000
SEDIMENT	Occult little brown myotis bat (Mammalian aerial insectivore)	2500
SEDIMENT	Violet-green Swallow (Avian aerial insectivore)	420
SOIL	American kestrel (Avian intermediate carnivore)	1400
SOIL	American kestrel (Avian top carnivore)	2700
SOIL	American robin (Avian herbivore)	6.4
SOIL	American robin (Avian insectivore)	140
SOIL	American robin (Avian omnivore)	12
SOIL	Deer mouse (Mammalian omnivore)	80

SOIL	Desert cottontail (Mammalian herbivore)	90
SOIL	Earthworm (Soil-dwelling invertebrate)	32
SOIL	Generic plant (Terrestrial autotroph - producer)	62
SOIL	Montane shrew (Mammalian insectivore)	920
SOIL	Red fox (Mammalian top carnivore)	17000
WATER	American kestrel (water)	81000
WATER	American robin (water)	69000
WATER	Deer mouse (water)	180000
WATER	Desert cottontail (water)	350000
WATER	Montane shrew (water)	150000
WATER	Occult little brown myotis bat (water)	210000
WATER	Red fox (water)	400000
WATER	Violet-green Swallow (water)	40000
SEDIMENT	Aquatic community organisms - sediment	25000
SEDIMENT	Occult little brown myotis bat (Mammalian aerial insectivore)	
SEDIMENT	Violet-green Swallow (Avian aerial insectivore)	
SOIL	American kestrel (Avian intermediate carnivore)	
SOIL	American kestrel (Avian top carnivore)	
SOIL	American robin (Avian herbivore)	
SOIL	American robin (Avian insectivore)	
SOIL	American robin (Avian omnivore)	
SOIL	Deer mouse (Mammalian omnivore)	
SOIL	Desert cottontail (Mammalian herbivore)	
SOIL	Earthworm (Soil-dwelling invertebrate)	
SOIL	Generic plant (Terrestrial autotroph - producer)	
SOIL	Montane shrew (Mammalian insectivore)	
SOIL	Red fox (Mammalian top carnivore)	
WATER	American kestrel (water)	910000
WATER	American robin (water)	780000
WATER	Aquatic community organisms - water	530
WATER	Deer mouse (water)	10000
WATER	Desert cottontail (water)	19000
WATER	Montane shrew (water)	8600
WATER	Occult little brown myotis bat (water)	12000

WATER	Red fox (water)	22000
WATER	Violet-green Swallow (water)	450000
SEDIMENT	Aquatic community organisms - sediment	
SEDIMENT	Occult little brown myotis bat (Mammalian aerial insectivore)	0.36
SOIL	Deer mouse (Mammalian omnivore)	0.48
SOIL	Desert cottontail (Mammalian herbivore)	2.9
SOIL	Earthworm (Soil-dwelling invertebrate)	78
SOIL	Generic plant (Terrestrial autotroph - producer)	0.05
SOIL	Montane shrew (Mammalian insectivore)	0.26
SOIL	Red fox (Mammalian top carnivore)	45
WATER	Aquatic community organisms - water	30
WATER	Deer mouse (water)	810
WATER	Desert cottontail (water)	1500
WATER	Montane shrew (water)	690
WATER	Occult little brown myotis bat (water)	960
WATER	Red fox (water)	1700
SEDIMENT	Aquatic community organisms - sediment	9.7
SEDIMENT	Occult little brown myotis bat (Mammalian aerial insectivore)	27
SEDIMENT	Violet-green Swallow (Avian aerial insectivore)	35
SOIL	American kestrel (Avian intermediate carnivore)	160
SOIL	American kestrel (Avian top carnivore)	1100
SOIL	American robin (Avian herbivore)	42
SOIL	American robin (Avian insectivore)	18
SOIL	American robin (Avian omnivore)	26
SOIL	Deer mouse (Mammalian omnivore)	32
SOIL	Desert cottontail (Mammalian herbivore)	160
SOIL	Earthworm (Soil-dwelling invertebrate)	6.8
SOIL	Generic plant (Terrestrial autotroph - producer)	18
SOIL	Montane shrew (Mammalian insectivore)	15
SOIL	Red fox (Mammalian top carnivore)	810
WATER	American kestrel (water)	42000
WATER	American robin (water)	36000
WATER	Aquatic community organisms - water	150
WATER	Deer mouse (water)	660
WATER	Desert cottontail (water)	1200
WATER	Montane shrew (water)	560
WATER	Occult little brown myotis bat (water)	790
WATER	Red fox (water)	1400
WATER	Violet-green Swallow (water)	21000
SEDIMENT	Aquatic community organisms - sediment	150
SEDIMENT	Occult little brown myotis bat (Mammalian aerial insectivore)	3500
SEDIMENT	Violet-green Swallow (Avian aerial insectivore)	3000
SOIL	American kestrel (Avian intermediate carnivore)	11000
SOIL	American kestrel (Avian top carnivore)	37000
SOIL	American robin (Avian herbivore)	820
SOIL	American robin (Avian insectivore)	1000
SOIL	American robin (Avian omnivore)	930

SOIL	Deer mouse (Mammalian omnivore)	1800
SOIL	Desert cottontail (Mammalian herbivore)	3300
SOIL	Earthworm (Soil-dwelling invertebrate)	330
SOIL	Generic plant (Terrestrial autotroph - producer)	110
SOIL	Montane shrew (Mammalian insectivore)	1300
SOIL	Red fox (Mammalian top carnivore)	41000
WATER	American kestrel (water)	760000
WATER	American robin (water)	650000
WATER	Aquatic community organisms - water	3.9
WATER	Deer mouse (water)	7200
WATER	Desert cottontail (water)	14000
WATER	Montane shrew (water)	6100
WATER	Occult little brown myotis bat (water)	8600
WATER	Red fox (water)	16000
WATER	Violet-green Swallow (water)	380000
SEDIMENT	Occult little brown myotis bat (Mammalian aerial insectivore)	73
SOIL	Deer mouse (Mammalian omnivore)	56
SOIL	Desert cottontail (Mammalian herbivore)	170
SOIL	Earthworm (Soil-dwelling invertebrate)	40
SOIL	Generic plant (Terrestrial autotroph - producer)	2.5
SOIL	Montane shrew (Mammalian insectivore)	18
SOIL	Red fox (Mammalian top carnivore)	420
WATER	Aquatic community organisms - water	0.66
WATER	Deer mouse (water)	3400
WATER	Desert cottontail (water)	6800
WATER	Montane shrew (water)	2900
WATER	Occult little brown myotis bat (water)	4100
WATER	Red fox (water)	7600
SEDIMENT	Occult little brown myotis bat (Mammalian aerial insectivore)	170
SEDIMENT	Violet-green Swallow (Avian aerial insectivore)	10
SOIL	American kestrel (Avian intermediate carnivore)	56
SOIL	American kestrel (Avian top carnivore)	1400
SOIL	American robin (Avian herbivore)	2
SOIL	American robin (Avian insectivore)	7.5
SOIL	American robin (Avian omnivore)	3.2
SOIL	Deer mouse (Mammalian omnivore)	56
SOIL	Desert cottontail (Mammalian herbivore)	77
SOIL	Generic plant (Terrestrial autotroph - producer)	36
SOIL	Montane shrew (Mammalian insectivore)	120
SOIL	Red fox (Mammalian top carnivore)	21000
WATER	American kestrel (water)	440000
WATER	American robin (water)	380000
WATER	Aquatic community organisms - water	1.6
WATER	Deer mouse (water)	140000
WATER	Desert cottontail (water)	280000
WATER	Montane shrew (water)	120000
WATER	Occult little brown myotis bat (water)	170000

WATER	Red fox (water)	320000
WATER	Violet-green Swallow (water)	220000
SEDIMENT	Aquatic community organisms - sediment	0.99
SEDIMENT	Occult little brown myotis bat (Mammalian aerial insectivore)	0.33
SEDIMENT	Violet-green Swallow (Avian aerial insectivore)	0.38
SOIL	American kestrel (Avian intermediate carnivore)	2
SOIL	American kestrel (Avian top carnivore)	580
SOIL	American robin (Avian herbivore)	4.4
SOIL	American robin (Avian insectivore)	0.29
SOIL	American robin (Avian omnivore)	0.54
SOIL	Deer mouse (Mammalian omnivore)	0.51
SOIL	Desert cottontail (Mammalian herbivore)	9.9
SOIL	Earthworm (Soil-dwelling invertebrate)	140
SOIL	Generic plant (Terrestrial autotroph - producer)	32
SOIL	Montane shrew (Mammalian insectivore)	0.27
SOIL	Red fox (Mammalian top carnivore)	510
WATER	American kestrel (water)	12000
WATER	American robin (water)	10000
WATER	Aquatic community organisms - water	0.28
WATER	Deer mouse (water)	5600
WATER	Desert cottontail (water)	11000
WATER	Montane shrew (water)	4800
WATER	Occult little brown myotis bat (water)	6700
WATER	Red fox (water)	12000
WATER	Violet-green Swallow (water)	5900
WATER	Aquatic community organisms - water	230
SEDIMENT	Aquatic community organisms - sediment	43
SEDIMENT	Occult little brown myotis bat (Mammalian aerial insectivore)	93
SEDIMENT	Violet-green Swallow (Avian aerial insectivore)	61
SOIL	American kestrel (Avian intermediate carnivore)	260
SOIL	American kestrel (Avian top carnivore)	1200
SOIL	American robin (Avian herbivore)	68
SOIL	American robin (Avian insectivore)	28
SOIL	American robin (Avian omnivore)	40
SOIL	Deer mouse (Mammalian omnivore)	110
SOIL	Desert cottontail (Mammalian herbivore)	840
SOIL	Montane shrew (Mammalian insectivore)	45
SOIL	Red fox (Mammalian top carnivore)	1800
WATER	American kestrel (water)	14000
WATER	American robin (water)	12000
WATER	Aquatic community organisms - water	11
WATER	Deer mouse (water)	190000
WATER	Desert cottontail (water)	380000
WATER	Montane shrew (water)	160000
WATER	Occult little brown myotis bat (water)	230000
WATER	Red fox (water)	430000
WATER	Violet-green Swallow (water)	7100

SEDIMENT	Occult little brown myotis bat (Mammalian aerial insectivore)	960
SEDIMENT	Violet-green Swallow (Avian aerial insectivore)	680
SOIL	American kestrel (Avian intermediate carnivore)	2200
SOIL	American kestrel (Avian top carnivore)	5400
SOIL	American robin (Avian herbivore)	280
SOIL	American robin (Avian insectivore)	190
SOIL	American robin (Avian omnivore)	220
SOIL	Deer mouse (Mammalian omnivore)	860
SOIL	Desert cottontail (Mammalian herbivore)	3200
SOIL	Earthworm (Soil-dwelling invertebrate)	0.34
SOIL	Generic plant (Terrestrial autotroph - producer)	0.35
SOIL	Montane shrew (Mammalian insectivore)	280
SOIL	Red fox (Mammalian top carnivore)	7200
WATER	American kestrel (water)	14000
WATER	American robin (water)	12000
WATER	Aquatic community organisms - water	11
WATER	Deer mouse (water)	190000
WATER	Desert cottontail (water)	380000
WATER	Montane shrew (water)	160000
WATER	Occult little brown myotis bat (water)	230000
WATER	Red fox (water)	430000
WATER	Violet-green Swallow (water)	7100
SEDIMENT	Occult little brown myotis bat (Mammalian aerial insectivore)	370
SEDIMENT	Violet-green Swallow (Avian aerial insectivore)	230
SOIL	American kestrel (Avian intermediate carnivore)	930
SOIL	American kestrel (Avian top carnivore)	3500
SOIL	American robin (Avian herbivore)	170
SOIL	American robin (Avian insectivore)	96
SOIL	American robin (Avian omnivore)	120
SOIL	Deer mouse (Mammalian omnivore)	400
SOIL	Desert cottontail (Mammalian herbivore)	1800
SOIL	Generic plant (Terrestrial autotroph - producer)	13
SOIL	Montane shrew (Mammalian insectivore)	160
SOIL	Red fox (Mammalian top carnivore)	5400
WATER	American kestrel (water)	160
WATER	American robin (water)	140
WATER	Aquatic community organisms - water	3
WATER	Deer mouse (water)	100
WATER	Desert cottontail (water)	200
WATER	Montane shrew (water)	89
WATER	Occult little brown myotis bat (water)	120
WATER	Red fox (water)	230
WATER	Violet-green Swallow (water)	82
SEDIMENT	Aquatic community organisms - sediment	31
SEDIMENT	Occult little brown myotis bat (Mammalian aerial insectivore)	54
SEDIMENT	Violet-green Swallow (Avian aerial insectivore)	23
SOIL	American kestrel (Avian intermediate carnivore)	110

SOIL	American kestrel (Avian top carnivore)	1600
SOIL	American robin (Avian herbivore)	38
SOIL	American robin (Avian insectivore)	15
SOIL	American robin (Avian omnivore)	22
SOIL	Deer mouse (Mammalian omnivore)	64
SOIL	Desert cottontail (Mammalian herbivore)	270
SOIL	Earthworm (Soil-dwelling invertebrate)	80
SOIL	Generic plant (Terrestrial autotroph - producer)	70
SOIL	Montane shrew (Mammalian insectivore)	38
SOIL	Red fox (Mammalian top carnivore)	3800
WATER	American kestrel (water)	25000
WATER	American robin (water)	21000
WATER	Aquatic community organisms - water	5
WATER	Deer mouse (water)	26000
WATER	Desert cottontail (water)	52000
WATER	Montane shrew (water)	22000
WATER	Occult little brown myotis bat (water)	32000
WATER	Red fox (water)	59000
WATER	Violet-green Swallow (water)	12000
SEDIMENT	Aquatic community organisms - sediment	0.1
SEDIMENT	Occult little brown myotis bat (Mammalian aerial insectivore)	420
SEDIMENT	Violet-green Swallow (Avian aerial insectivore)	0.14
SOIL	American kestrel (Avian intermediate carnivore)	0.47
SOIL	American kestrel (Avian top carnivore)	0.58
SOIL	American robin (Avian herbivore)	0.1
SOIL	American robin (Avian insectivore)	0.1
SOIL	American robin (Avian omnivore)	0.1
SOIL	Deer mouse (Mammalian omnivore)	340
SOIL	Desert cottontail (Mammalian herbivore)	740
SOIL	Montane shrew (Mammalian insectivore)	310
SOIL	Red fox (Mammalian top carnivore)	2200
WATER	American kestrel (water)	330
WATER	American robin (water)	280
WATER	Aquatic community organisms - water	5.2
WATER	Deer mouse (water)	360000
WATER	Desert cottontail (water)	700000
WATER	Montane shrew (water)	300000
WATER	Occult little brown myotis bat (water)	430000
WATER	Red fox (water)	790000
WATER	Violet-green Swallow (water)	160
SEDIMENT	Occult little brown myotis bat (Mammalian aerial insectivore)	160
SEDIMENT	Violet-green Swallow (Avian aerial insectivore)	45
SOIL	American kestrel (Avian intermediate carnivore)	210
SOIL	American kestrel (Avian top carnivore)	1000
SOIL	American robin (Avian herbivore)	210
SOIL	American robin (Avian insectivore)	31
SOIL	American robin (Avian omnivore)	54

SOIL	Deer mouse (Mammalian omnivore)	240
SOIL	Desert cottontail (Mammalian herbivore)	3500
SOIL	Montane shrew (Mammalian insectivore)	120
SOIL	Red fox (Mammalian top carnivore)	4600
WATER	American kestrel (water)	100000
WATER	American robin (water)	87000
WATER	Aquatic community organisms - water	20
WATER	Deer mouse (water)	140000
WATER	Desert cottontail (water)	270000
WATER	Montane shrew (water)	110000
WATER	Occult little brown myotis bat (water)	160000
WATER	Red fox (water)	300000
WATER	Violet-green Swallow (water)	50000
SEDIMENT	Aquatic community organisms - sediment	20000
WATER	Aquatic community organisms - water	1000
SEDIMENT	Aquatic community organisms - sediment	35
SEDIMENT	Occult little brown myotis bat (Mammalian aerial insectivore)	130
SEDIMENT	Violet-green Swallow (Avian aerial insectivore)	27
SOIL	American kestrel (Avian intermediate carnivore)	120
SOIL	American kestrel (Avian top carnivore)	810
SOIL	American robin (Avian herbivore)	21
SOIL	American robin (Avian insectivore)	14
SOIL	American robin (Avian omnivore)	16
SOIL	Deer mouse (Mammalian omnivore)	120
SOIL	Desert cottontail (Mammalian herbivore)	370
SOIL	Earthworm (Soil-dwelling invertebrate)	1700
SOIL	Generic plant (Terrestrial autotroph - producer)	120
SOIL	Montane shrew (Mammalian insectivore)	72
SOIL	Red fox (Mammalian top carnivore)	3700
WATER	American kestrel (water)	130000
WATER	American robin (water)	110000
WATER	Aquatic community organisms - water	1
WATER	Deer mouse (water)	5100
WATER	Desert cottontail (water)	10000
WATER	Montane shrew (water)	4300
WATER	Occult little brown myotis bat (water)	6100
WATER	Red fox (water)	11000
WATER	Violet-green Swallow (water)	64000
SEDIMENT	Occult little brown myotis bat (Mammalian aerial insectivore)	150
SOIL	Deer mouse (Mammalian omnivore)	100
SOIL	Desert cottontail (Mammalian herbivore)	250
SOIL	Montane shrew (Mammalian insectivore)	38
SOIL	Red fox (Mammalian top carnivore)	880
SEDIMENT	Aquatic community organisms - sediment	460
SEDIMENT	Occult little brown myotis bat (Mammalian aerial insectivore)	5300
SEDIMENT	Violet-green Swallow (Avian aerial insectivore)	11000
SOIL	American kestrel (Avian intermediate carnivore)	35000

SOIL	American kestrel (Avian top carnivore)	90000
SOIL	American robin (Avian herbivore)	1400
SOIL	American robin (Avian insectivore)	3100
SOIL	American robin (Avian omnivore)	1900
SOIL	Deer mouse (Mammalian omnivore)	1400
SOIL	Desert cottontail (Mammalian herbivore)	2000
SOIL	Earthworm (Soil-dwelling invertebrate)	450
SOIL	Generic plant (Terrestrial autotroph - producer)	220
SOIL	Montane shrew (Mammalian insectivore)	1500
SOIL	Red fox (Mammalian top carnivore)	41000
WATER	American kestrel (water)	4800000
WATER	American robin (water)	4100000
WATER	Aquatic community organisms - water	1300
WATER	Deer mouse (water)	230000
WATER	Desert cottontail (water)	450000
WATER	Montane shrew (water)	190000
WATER	Occult little brown myotis bat (water)	270000
WATER	Red fox (water)	510000
WATER	Violet-green Swallow (water)	2400000
SEDIMENT	Aquatic community organisms - sediment	0.18
SEDIMENT	Occult little brown myotis bat (Mammalian aerial insectivore)	2.2
SEDIMENT	Violet-green Swallow (Avian aerial insectivore)	0.018
SOIL	American kestrel (Avian intermediate carnivore)	0.082
SOIL	American kestrel (Avian top carnivore)	0.28
SOIL	American robin (Avian herbivore)	0.07
SOIL	American robin (Avian insectivore)	0.013
SOIL	American robin (Avian omnivore)	0.022
SOIL	Deer mouse (Mammalian omnivore)	3
SOIL	Desert cottontail (Mammalian herbivore)	22
SOIL	Earthworm (Soil-dwelling invertebrate)	0.05
SOIL	Generic plant (Terrestrial autotroph - producer)	34
SOIL	Montane shrew (Mammalian insectivore)	1.7
SOIL	Red fox (Mammalian top carnivore)	46
WATER	American kestrel (water)	150
WATER	American robin (water)	130
WATER	Aquatic community organisms - water	0.77
WATER	Deer mouse (water)	7400
WATER	Desert cottontail (water)	14000
WATER	Montane shrew (water)	6300
WATER	Occult little brown myotis bat (water)	8800
WATER	Red fox (water)	16000
WATER	Violet-green Swallow (water)	78
SEDIMENT	Occult little brown myotis bat (Mammalian aerial insectivore)	0.0039
SEDIMENT	Violet-green Swallow (Avian aerial insectivore)	0.00046
SOIL	American kestrel (Avian intermediate carnivore)	0.0021
SOIL	American kestrel (Avian top carnivore)	0.0076
SOIL	American robin (Avian herbivore)	0.075

SOIL	American robin (Avian insectivore)	0.00035
SOIL	American robin (Avian omnivore)	0.00071
SOIL	Deer mouse (Mammalian omnivore)	0.0063
SOIL	Desert cottontail (Mammalian herbivore)	2.2
SOIL	Earthworm (Soil-dwelling invertebrate)	2.5
SOIL	Montane shrew (Mammalian insectivore)	0.0031
SOIL	Red fox (Mammalian top carnivore)	0.084
WATER	American kestrel (water)	53
WATER	American robin (water)	45
WATER	Aquatic community organisms - water	0.0028
WATER	Deer mouse (water)	160
WATER	Desert cottontail (water)	320
WATER	Montane shrew (water)	140
WATER	Occult little brown myotis bat (water)	200
WATER	Red fox (water)	370
WATER	Violet-green Swallow (water)	26
SEDIMENT	Violet-green Swallow (Avian aerial insectivore)	27
SOIL	American kestrel (Avian intermediate carnivore)	130
SOIL	American kestrel (Avian top carnivore)	1700
SOIL	American robin (Avian herbivore)	19
SOIL	American robin (Avian insectivore)	17
SOIL	American robin (Avian omnivore)	18
WATER	Aquatic community organisms - water	1800
SEDIMENT	Aquatic community organisms - sediment	22
SEDIMENT	Occult little brown myotis bat (Mammalian aerial insectivore)	13
SEDIMENT	Violet-green Swallow (Avian aerial insectivore)	32
SOIL	American kestrel (Avian intermediate carnivore)	160
SOIL	American kestrel (Avian top carnivore)	2900
SOIL	American robin (Avian herbivore)	160
SOIL	American robin (Avian insectivore)	21
SOIL	American robin (Avian omnivore)	38
SOIL	Deer mouse (Mammalian omnivore)	20
SOIL	Desert cottontail (Mammalian herbivore)	500
SOIL	Earthworm (Soil-dwelling invertebrate)	280
SOIL	Generic plant (Terrestrial autotroph - producer)	38
SOIL	Montane shrew (Mammalian insectivore)	9.7
SOIL	Red fox (Mammalian top carnivore)	1200
WATER	American kestrel (water)	230000
WATER	American robin (water)	200000
WATER	Aquatic community organisms - water	29
WATER	Deer mouse (water)	360
WATER	Desert cottontail (water)	710
WATER	Montane shrew (water)	300
WATER	Occult little brown myotis bat (water)	430
WATER	Red fox (water)	800
WATER	Violet-green Swallow (water)	110000
WATER	American kestrel (water)	2100000

WATER	American robin (water)	1800000
WATER	Deer mouse (water)	41000
WATER	Desert cottontail (water)	80000
WATER	Montane shrew (water)	35000
WATER	Occult little brown myotis bat (water)	49000
WATER	Red fox (water)	91000
WATER	Violet-green Swallow (water)	1000000
SEDIMENT	Aquatic community organisms - sediment	0.72
SEDIMENT	Occult little brown myotis bat (Mammalian aerial insectivore)	0.9
SEDIMENT	Violet-green Swallow (Avian aerial insectivore)	1
SOIL	American kestrel (Avian intermediate carnivore)	5.6
SOIL	American kestrel (Avian top carnivore)	97
SOIL	American robin (Avian herbivore)	1
SOIL	American robin (Avian insectivore)	0.75
SOIL	American robin (Avian omnivore)	0.87
SOIL	Deer mouse (Mammalian omnivore)	0.83
SOIL	Desert cottontail (Mammalian herbivore)	2.1
SOIL	Earthworm (Soil-dwelling invertebrate)	4.1
SOIL	Generic plant (Terrestrial autotroph - producer)	0.52
SOIL	Montane shrew (Mammalian insectivore)	0.66
SOIL	Red fox (Mammalian top carnivore)	84
WATER	American kestrel (water)	3600
WATER	American robin (water)	3100
WATER	Aquatic community organisms - water	5
WATER	Deer mouse (water)	1000
WATER	Desert cottontail (water)	2000
WATER	Montane shrew (water)	890
WATER	Occult little brown myotis bat (water)	1200
WATER	Red fox (water)	2300
WATER	Violet-green Swallow (water)	1800
SEDIMENT	Aquatic community organisms - sediment	0.5
SEDIMENT	Occult little brown myotis bat (Mammalian aerial insectivore)	18
SEDIMENT	Violet-green Swallow (Avian aerial insectivore)	3.6
SOIL	American kestrel (Avian intermediate carnivore)	19
SOIL	American kestrel (Avian top carnivore)	840
SOIL	American robin (Avian herbivore)	11
SOIL	American robin (Avian insectivore)	2.6
SOIL	American robin (Avian omnivore)	4.3
SOIL	Deer mouse (Mammalian omnivore)	24
SOIL	Desert cottontail (Mammalian herbivore)	150
SOIL	Generic plant (Terrestrial autotroph - producer)	560
SOIL	Montane shrew (Mammalian insectivore)	14
SOIL	Red fox (Mammalian top carnivore)	4100
WATER	American kestrel (water)	45000
WATER	American robin (water)	38000
WATER	Aquatic community organisms - water	0.1
WATER	Deer mouse (water)	100000

WATER	Desert cottontail (water)	190000
WATER	Montane shrew (water)	85000
WATER	Occult little brown myotis bat (water)	110000
WATER	Red fox (water)	220000
WATER	Violet-green Swallow (water)	22000
SEDIMENT	Occult little brown myotis bat (Mammalian aerial insectivore)	1700
SOIL	Deer mouse (Mammalian omnivore)	96
SOIL	Desert cottontail (Mammalian herbivore)	110
SOIL	Montane shrew (Mammalian insectivore)	660
SOIL	Red fox (Mammalian top carnivore)	19000
WATER	Aquatic community organisms - water	1500
WATER	Deer mouse (water)	130000
WATER	Desert cottontail (water)	250000
WATER	Montane shrew (water)	110000
WATER	Occult little brown myotis bat (water)	150000
WATER	Red fox (water)	290000
SEDIMENT	Occult little brown myotis bat (Mammalian aerial insectivore)	0.044
SEDIMENT	Violet-green Swallow (Avian aerial insectivore)	1.3
SOIL	American kestrel (Avian intermediate carnivore)	6.6
SOIL	American kestrel (Avian top carnivore)	75
SOIL	American robin (Avian herbivore)	9.2
SOIL	American robin (Avian insectivore)	0.9
SOIL	American robin (Avian omnivore)	1.6
SOIL	Deer mouse (Mammalian omnivore)	0.068
SOIL	Desert cottontail (Mammalian herbivore)	2.8
SOIL	Generic plant (Terrestrial autotroph - producer)	0.1
SOIL	Montane shrew (Mammalian insectivore)	0.032
SOIL	Red fox (Mammalian top carnivore)	2.8
WATER	American kestrel (water)	2900
WATER	American robin (water)	2500
WATER	Aquatic community organisms - water	0.03
WATER	Deer mouse (water)	37
WATER	Desert cottontail (water)	73
WATER	Montane shrew (water)	31
WATER	Occult little brown myotis bat (water)	44
WATER	Red fox (water)	82
WATER	Violet-green Swallow (water)	1400
SEDIMENT	Occult little brown myotis bat (Mammalian aerial insectivore)	98
SOIL	Deer mouse (Mammalian omnivore)	150
SOIL	Desert cottontail (Mammalian herbivore)	5900
SOIL	Montane shrew (Mammalian insectivore)	72
SOIL	Red fox (Mammalian top carnivore)	7300
WATER	Deer mouse (water)	83000
WATER	Desert cottontail (water)	160000
WATER	Montane shrew (water)	70000
WATER	Occult little brown myotis bat (water)	99000
WATER	Red fox (water)	180000

SEDIMENT	Aquatic community organisms - sediment	100
SEDIMENT	Occult little brown myotis bat (Mammalian aerial insectivore)	1100
SEDIMENT	Violet-green Swallow (Avian aerial insectivore)	8800
SOIL	American kestrel (Avian intermediate carnivore)	21000
SOIL	American kestrel (Avian top carnivore)	39000
SOIL	American robin (Avian herbivore)	1900
SOIL	American robin (Avian insectivore)	1600
SOIL	American robin (Avian omnivore)	1700
SOIL	Deer mouse (Mammalian omnivore)	750
SOIL	Desert cottontail (Mammalian herbivore)	2000
SOIL	Generic plant (Terrestrial autotroph - producer)	25
SOIL	Montane shrew (Mammalian insectivore)	220
SOIL	Red fox (Mammalian top carnivore)	4800
WATER	American kestrel (water)	650000
WATER	American robin (water)	550000
WATER	Aquatic community organisms - water	5
WATER	Deer mouse (water)	32000
WATER	Desert cottontail (water)	62000
WATER	Montane shrew (water)	27000
WATER	Occult little brown myotis bat (water)	38000
WATER	Red fox (water)	70000
WATER	Violet-green Swallow (water)	320000
SEDIMENT	Occult little brown myotis bat (Mammalian aerial insectivore)	610
SEDIMENT	Violet-green Swallow (Avian aerial insectivore)	30
SOIL	American kestrel (Avian intermediate carnivore)	84
SOIL	American kestrel (Avian top carnivore)	170
SOIL	American robin (Avian herbivore)	8.9
SOIL	American robin (Avian insectivore)	6.7
SOIL	American robin (Avian omnivore)	7.6
SOIL	Deer mouse (Mammalian omnivore)	480
SOIL	Desert cottontail (Mammalian herbivore)	1500
SOIL	Generic plant (Terrestrial autotroph - producer)	0.025
SOIL	Montane shrew (Mammalian insectivore)	140
SOIL	Red fox (Mammalian top carnivore)	3300
WATER	American kestrel (water)	9100
WATER	American robin (water)	7800
WATER	Aquatic community organisms - water	19
WATER	Deer mouse (water)	11000
WATER	Desert cottontail (water)	21000
WATER	Montane shrew (water)	9400
WATER	Occult little brown myotis bat (water)	13000
WATER	Red fox (water)	24000
WATER	Violet-green Swallow (water)	4500
SEDIMENT	Aquatic community organisms - sediment	120
SEDIMENT	Occult little brown myotis bat (Mammalian aerial insectivore)	120
SEDIMENT	Violet-green Swallow (Avian aerial insectivore)	65
SOIL	American kestrel (Avian intermediate carnivore)	320

SOIL	American kestrel (Avian top carnivore)	2400
SOIL	American robin (Avian herbivore)	350
SOIL	American robin (Avian insectivore)	48
SOIL	American robin (Avian omnivore)	85
SOIL	Deer mouse (Mammalian omnivore)	170
SOIL	Desert cottontail (Mammalian herbivore)	1800
SOIL	Earthworm (Soil-dwelling invertebrate)	120
SOIL	Generic plant (Terrestrial autotroph - producer)	160
SOIL	Montane shrew (Mammalian insectivore)	98
SOIL	Red fox (Mammalian top carnivore)	6000
WATER	American kestrel (water)	1000000
WATER	American robin (water)	850000
WATER	Aquatic community organisms - water	65
WATER	Deer mouse (water)	660000
WATER	Desert cottontail (water)	1200000
WATER	Montane shrew (water)	560000
WATER	Occult little brown myotis bat (water)	790000
WATER	Red fox (water)	1400000
WATER	Violet-green Swallow (water)	490000
SEDIMENT	Occult little brown myotis bat (Mammalian aerial insectivore)	0.046
SOIL	Deer mouse (Mammalian omnivore)	0.075
SOIL	Desert cottontail (Mammalian herbivore)	13
SOIL	Montane shrew (Mammalian insectivore)	0.037
SOIL	Red fox (Mammalian top carnivore)	0.16
SEDIMENT	Occult little brown myotis bat (Mammalian aerial insectivore)	73
SOIL	Deer mouse (Mammalian omnivore)	100
SOIL	Desert cottontail (Mammalian herbivore)	750
SOIL	Montane shrew (Mammalian insectivore)	58
SOIL	Red fox (Mammalian top carnivore)	2400
SEDIMENT	Aquatic community organisms - sediment	0.005
SEDIMENT	Occult little brown myotis bat (Mammalian aerial insectivore)	0.33
SEDIMENT	Violet-green Swallow (Avian aerial insectivore)	19
SOIL	American kestrel (Avian intermediate carnivore)	96
SOIL	American kestrel (Avian top carnivore)	650
SOIL	American robin (Avian herbivore)	80
SOIL	American robin (Avian insectivore)	14
SOIL	American robin (Avian omnivore)	24
SOIL	Deer mouse (Mammalian omnivore)	0.46
SOIL	Desert cottontail (Mammalian herbivore)	3.4
SOIL	Montane shrew (Mammalian insectivore)	0.27
SOIL	Red fox (Mammalian top carnivore)	15
WATER	American kestrel (water)	310000
WATER	American robin (water)	270000
WATER	Aquatic community organisms - water	2.2
WATER	Deer mouse (water)	2100
WATER	Desert cottontail (water)	4100
WATER	Montane shrew (water)	1700

WATER	Occult little brown myotis bat (water)	2500
WATER	Red fox (water)	4600
WATER	Violet-green Swallow (water)	150000
SEDIMENT	Aquatic community organisms - sediment	0.0023
SEDIMENT	Occult little brown myotis bat (Mammalian aerial insectivore)	0.011
SEDIMENT	Violet-green Swallow (Avian aerial insectivore)	0.28
SOIL	American kestrel (Avian intermediate carnivore)	1.4
SOIL	American kestrel (Avian top carnivore)	10
SOIL	American robin (Avian herbivore)	1.1
SOIL	American robin (Avian insectivore)	0.21
SOIL	American robin (Avian omnivore)	0.36
SOIL	Deer mouse (Mammalian omnivore)	0.016
SOIL	Desert cottontail (Mammalian herbivore)	0.12
SOIL	Generic plant (Terrestrial autotroph - producer)	0.1
SOIL	Montane shrew (Mammalian insectivore)	0.0094
SOIL	Red fox (Mammalian top carnivore)	0.56
WATER	American kestrel (water)	4600
WATER	American robin (water)	4000
WATER	Aquatic community organisms - water	0.095
WATER	Deer mouse (water)	73
WATER	Desert cottontail (water)	140
WATER	Montane shrew (water)	62
WATER	Occult little brown myotis bat (water)	88
WATER	Red fox (water)	160
WATER	Violet-green Swallow (water)	2300
SEDIMENT	Aquatic community organisms - sediment	0.0032
SEDIMENT	Occult little brown myotis bat (Mammalian aerial insectivore)	0.33
SEDIMENT	Violet-green Swallow (Avian aerial insectivore)	0.36
SOIL	American kestrel (Avian intermediate carnivore)	1
SOIL	American kestrel (Avian top carnivore)	1.1
SOIL	American robin (Avian herbivore)	19
SOIL	American robin (Avian insectivore)	0.28
SOIL	American robin (Avian omnivore)	0.55
SOIL	Deer mouse (Mammalian omnivore)	0.54
SOIL	Desert cottontail (Mammalian herbivore)	57
SOIL	Generic plant (Terrestrial autotroph - producer)	2.2
SOIL	Montane shrew (Mammalian insectivore)	0.27
SOIL	Red fox (Mammalian top carnivore)	1.4
WATER	American kestrel (water)	17000
WATER	American robin (water)	15000
WATER	Aquatic community organisms - water	0.0043
WATER	Deer mouse (water)	6100
WATER	Desert cottontail (water)	12000
WATER	Montane shrew (water)	5200
WATER	Occult little brown myotis bat (water)	7300
WATER	Red fox (water)	13000
WATER	Violet-green Swallow (water)	8800

SEDIMENT	Aquatic community organisms - sediment	0.0032
SEDIMENT	Occult little brown myotis bat (Mammalian aerial insectivore)	2.9
SEDIMENT	Violet-green Swallow (Avian aerial insectivore)	3.1
SOIL	American kestrel (Avian intermediate carnivore)	9.2
SOIL	American kestrel (Avian top carnivore)	10
SOIL	American robin (Avian herbivore)	22
SOIL	American robin (Avian insectivore)	2.3
SOIL	American robin (Avian omnivore)	4.2
SOIL	Deer mouse (Mammalian omnivore)	4.3
SOIL	Desert cottontail (Mammalian herbivore)	69
SOIL	Generic plant (Terrestrial autotroph - producer)	2.2
SOIL	Montane shrew (Mammalian insectivore)	2.2
SOIL	Red fox (Mammalian top carnivore)	12
WATER	American kestrel (water)	17000
WATER	American robin (water)	15000
WATER	Aquatic community organisms - water	0.0043
WATER	Deer mouse (water)	6100
WATER	Desert cottontail (water)	12000
WATER	Montane shrew (water)	5200
WATER	Occult little brown myotis bat (water)	7300
WATER	Red fox (water)	13000
WATER	Violet-green Swallow (water)	8800
SEDIMENT	Occult little brown myotis bat (Mammalian aerial insectivore)	5.1
SEDIMENT	Violet-green Swallow (Avian aerial insectivore)	0.0084
SOIL	American kestrel (Avian intermediate carnivore)	0.027
SOIL	American kestrel (Avian top carnivore)	0.036
SOIL	American robin (Avian herbivore)	0.14
SOIL	American robin (Avian insectivore)	0.0063
SOIL	American robin (Avian omnivore)	0.012
SOIL	Deer mouse (Mammalian omnivore)	8
SOIL	Desert cottontail (Mammalian herbivore)	260
SOIL	Montane shrew (Mammalian insectivore)	4.1
SOIL	Red fox (Mammalian top carnivore)	28
SEDIMENT	Aquatic community organisms - sediment	0.0031
SEDIMENT	Occult little brown myotis bat (Mammalian aerial insectivore)	4.6
SEDIMENT	Violet-green Swallow (Avian aerial insectivore)	0.14
SOIL	American kestrel (Avian intermediate carnivore)	0.34
SOIL	American kestrel (Avian top carnivore)	0.3
SOIL	American robin (Avian herbivore)	5.6
SOIL	American robin (Avian insectivore)	0.11
SOIL	American robin (Avian omnivore)	0.21
SOIL	Deer mouse (Mammalian omnivore)	7.3
SOIL	Desert cottontail (Mammalian herbivore)	610
SOIL	Montane shrew (Mammalian insectivore)	3.7
SOIL	Red fox (Mammalian top carnivore)	12
WATER	American kestrel (water)	1000
WATER	American robin (water)	920

WATER	Aquatic community organisms - water	100
WATER	Deer mouse (water)	52000
WATER	Desert cottontail (water)	100000
WATER	Montane shrew (water)	44000
WATER	Occult little brown myotis bat (water)	62000
WATER	Red fox (water)	110000
WATER	Violet-green Swallow (water)	530
SEDIMENT	Aquatic community organisms - sediment	0.0041
SEDIMENT	Occult little brown myotis bat (Mammalian aerial insectivore)	0.055
SEDIMENT	Violet-green Swallow (Avian aerial insectivore)	0.48
SOIL	American kestrel (Avian intermediate carnivore)	1.2
SOIL	American kestrel (Avian top carnivore)	1.2
SOIL	American robin (Avian herbivore)	28
SOIL	American robin (Avian insectivore)	0.36
SOIL	American robin (Avian omnivore)	0.72
SOIL	Deer mouse (Mammalian omnivore)	0.089
SOIL	Desert cottontail (Mammalian herbivore)	12
SOIL	Generic plant (Terrestrial autotroph - producer)	4.1
SOIL	Montane shrew (Mammalian insectivore)	0.044
SOIL	Red fox (Mammalian top carnivore)	0.19
WATER	American kestrel (water)	2000
WATER	American robin (water)	1700
WATER	Aquatic community organisms - water	0.001
WATER	Deer mouse (water)	8400
WATER	Desert cottontail (water)	16000
WATER	Montane shrew (water)	7100
WATER	Occult little brown myotis bat (water)	10000
WATER	Red fox (water)	18000
WATER	Violet-green Swallow (water)	990
SEDIMENT	Aquatic community organisms - sediment	0.0019
SEDIMENT	Occult little brown myotis bat (Mammalian aerial insectivore)	0.0056
SEDIMENT	Violet-green Swallow (Avian aerial insectivore)	0.015
SOIL	American kestrel (Avian intermediate carnivore)	0.063
SOIL	American kestrel (Avian top carnivore)	0.12
SOIL	American robin (Avian herbivore)	0.35
SOIL	American robin (Avian insectivore)	0.012
SOIL	American robin (Avian omnivore)	0.023
SOIL	Deer mouse (Mammalian omnivore)	0.0088
SOIL	Desert cottontail (Mammalian herbivore)	0.33
SOIL	Generic plant (Terrestrial autotroph - producer)	10
SOIL	Montane shrew (Mammalian insectivore)	0.0045
SOIL	Red fox (Mammalian top carnivore)	0.058
WATER	American kestrel (water)	640
WATER	American robin (water)	550
WATER	Aquatic community organisms - water	0.056
WATER	Deer mouse (water)	100
WATER	Desert cottontail (water)	200

WATER	Montane shrew (water)	89
WATER	Occult little brown myotis bat (water)	120
WATER	Red fox (water)	230
WATER	Violet-green Swallow (water)	310
SEDIMENT	Aquatic community organisms - sediment	0.00001
SEDIMENT	Occult little brown myotis bat (Mammalian aerial insectivore)	1.5
SEDIMENT	Violet-green Swallow (Avian aerial insectivore)	61
SOIL	American kestrel (Avian intermediate carnivore)	280
SOIL	American kestrel (Avian top carnivore)	1100
SOIL	American robin (Avian herbivore)	15
SOIL	American robin (Avian insectivore)	40
SOIL	American robin (Avian omnivore)	22
SOIL	Deer mouse (Mammalian omnivore)	0.64
SOIL	Desert cottontail (Mammalian herbivore)	0.97
SOIL	Montane shrew (Mammalian insectivore)	1
SOIL	Red fox (Mammalian top carnivore)	35
WATER	American kestrel (water)	83000
WATER	American robin (water)	71000
WATER	Aquatic community organisms - water	0.056
WATER	Deer mouse (water)	780
WATER	Desert cottontail (water)	1500
WATER	Montane shrew (water)	670
WATER	Occult little brown myotis bat (water)	940
WATER	Red fox (water)	1700
WATER	Violet-green Swallow (water)	41000
SEDIMENT	Aquatic community organisms - sediment	0.0022
SEDIMENT	Occult little brown myotis bat (Mammalian aerial insectivore)	0.029
SEDIMENT	Violet-green Swallow (Avian aerial insectivore)	0.0019
SOIL	American kestrel (Avian intermediate carnivore)	0.0082
SOIL	American kestrel (Avian top carnivore)	0.02
SOIL	American robin (Avian herbivore)	0.049
SOIL	American robin (Avian insectivore)	0.0014
SOIL	American robin (Avian omnivore)	0.0028
SOIL	Deer mouse (Mammalian omnivore)	0.046
SOIL	Desert cottontail (Mammalian herbivore)	2
SOIL	Generic plant (Terrestrial autotroph - producer)	0.0034
SOIL	Montane shrew (Mammalian insectivore)	0.023
SOIL	Red fox (Mammalian top carnivore)	0.41
WATER	American kestrel (water)	83
WATER	American robin (water)	71
WATER	Aquatic community organisms - water	0.036
WATER	Deer mouse (water)	480
WATER	Desert cottontail (water)	940
WATER	Montane shrew (water)	410
WATER	Occult little brown myotis bat (water)	570
WATER	Red fox (water)	1000
WATER	Violet-green Swallow (water)	41

SEDIMENT	Aquatic community organisms - sediment	0.0024
SEDIMENT	Occult little brown myotis bat (Mammalian aerial insectivore)	0.074
SEDIMENT	Violet-green Swallow (Avian aerial insectivore)	0.4
SOIL	American kestrel (Avian intermediate carnivore)	1.2
SOIL	American kestrel (Avian top carnivore)	1.3
SOIL	American robin (Avian herbivore)	8.6
SOIL	American robin (Avian insectivore)	0.3
SOIL	American robin (Avian omnivore)	0.59
SOIL	Deer mouse (Mammalian omnivore)	0.11
SOIL	Desert cottontail (Mammalian herbivore)	4.9
SOIL	Generic plant (Terrestrial autotroph - producer)	0.4
SOIL	Montane shrew (Mammalian insectivore)	0.059
SOIL	Red fox (Mammalian top carnivore)	0.33
WATER	American kestrel (water)	7600
WATER	American robin (water)	6500
WATER	Aquatic community organisms - water	0.0038
WATER	Deer mouse (water)	520
WATER	Desert cottontail (water)	1000
WATER	Montane shrew (water)	440
WATER	Occult little brown myotis bat (water)	620
WATER	Red fox (water)	1100
WATER	Violet-green Swallow (water)	3800
SEDIMENT	Occult little brown myotis bat (Mammalian aerial insectivore)	0.027
SEDIMENT	Violet-green Swallow (Avian aerial insectivore)	1.7
SOIL	American kestrel (Avian intermediate carnivore)	7
SOIL	American kestrel (Avian top carnivore)	14
SOIL	American robin (Avian herbivore)	49
SOIL	American robin (Avian insectivore)	1.3
SOIL	American robin (Avian omnivore)	2.5
SOIL	Deer mouse (Mammalian omnivore)	0.043
SOIL	Desert cottontail (Mammalian herbivore)	2.1
SOIL	Montane shrew (Mammalian insectivore)	0.021
SOIL	Red fox (Mammalian top carnivore)	0.3
WATER	American kestrel (water)	70000
WATER	American robin (water)	60000
WATER	Deer mouse (water)	420
WATER	Desert cottontail (water)	820
WATER	Montane shrew (water)	350
WATER	Occult little brown myotis bat (water)	500
WATER	Red fox (water)	930
WATER	Violet-green Swallow (water)	35000
SEDIMENT	Aquatic community organisms - sediment	0.03
SEDIMENT	Occult little brown myotis bat (Mammalian aerial insectivore)	6.4
SEDIMENT	Violet-green Swallow (Avian aerial insectivore)	24
SOIL	American kestrel (Avian intermediate carnivore)	100
SOIL	American kestrel (Avian top carnivore)	250
SOIL	American robin (Avian herbivore)	110

SOIL	American robin (Avian insectivore)	18
SOIL	American robin (Avian omnivore)	32
SOIL	Deer mouse (Mammalian omnivore)	9.1
SOIL	Desert cottontail (Mammalian herbivore)	80
SOIL	Montane shrew (Mammalian insectivore)	5
SOIL	Red fox (Mammalian top carnivore)	87
WATER	American kestrel (water)	210000
WATER	American robin (water)	180000
WATER	Aquatic community organisms - water	0.03
WATER	Deer mouse (water)	21000
WATER	Desert cottontail (water)	41000
WATER	Montane shrew (water)	17000
WATER	Occult little brown myotis bat (water)	25000
WATER	Red fox (water)	46000
WATER	Violet-green Swallow (water)	100000
SEDIMENT	Aquatic community organisms - sediment	0.0001
SEDIMENT	Occult little brown myotis bat (Mammalian aerial insectivore)	7.4
SEDIMENT	Violet-green Swallow (Avian aerial insectivore)	5.5
SOIL	American kestrel (Avian intermediate carnivore)	21
SOIL	American kestrel (Avian top carnivore)	38
SOIL	American robin (Avian herbivore)	75
SOIL	American robin (Avian insectivore)	4.1
SOIL	American robin (Avian omnivore)	7.9
SOIL	Deer mouse (Mammalian omnivore)	11
SOIL	Desert cottontail (Mammalian herbivore)	290
SOIL	Montane shrew (Mammalian insectivore)	5.9
SOIL	Red fox (Mammalian top carnivore)	68
WATER	American kestrel (water)	83000
WATER	American robin (water)	71000
WATER	Aquatic community organisms - water	0.0002
WATER	Deer mouse (water)	42000
WATER	Desert cottontail (water)	82000
WATER	Montane shrew (water)	35000
WATER	Occult little brown myotis bat (water)	50000
WATER	Red fox (water)	93000
WATER	Violet-green Swallow (water)	41000
SEDIMENT	Aquatic community organisms - sediment	0.076
SEDIMENT	Occult little brown myotis bat (Mammalian aerial insectivore)	160
SOIL	Deer mouse (Mammalian omnivore)	160
SOIL	Desert cottontail (Mammalian herbivore)	490
SOIL	Generic plant (Terrestrial autotroph - producer)	0.25
SOIL	Montane shrew (Mammalian insectivore)	120
SOIL	Red fox (Mammalian top carnivore)	6200
WATER	Aquatic community organisms - water	5.8
WATER	Deer mouse (water)	360000
WATER	Desert cottontail (water)	720000
WATER	Montane shrew (water)	310000

WATER	Occult little brown myotis bat (water)	440000
WATER	Red fox (water)	810000
SEDIMENT	Aquatic community organisms - sediment	0.076
SEDIMENT	Occult little brown myotis bat (Mammalian aerial insectivore)	150
SOIL	Deer mouse (Mammalian omnivore)	160
SOIL	Desert cottontail (Mammalian herbivore)	500
SOIL	Montane shrew (Mammalian insectivore)	120
SOIL	Red fox (Mammalian top carnivore)	5200
WATER	Aquatic community organisms - water	4800
WATER	Deer mouse (water)	360000
WATER	Desert cottontail (water)	720000
WATER	Montane shrew (water)	310000
WATER	Occult little brown myotis bat (water)	440000
WATER	Red fox (water)	810000
SEDIMENT	Aquatic community organisms - sediment	0.057
SEDIMENT	Occult little brown myotis bat (Mammalian aerial insectivore)	270
SOIL	Deer mouse (Mammalian omnivore)	310
SOIL	Desert cottontail (Mammalian herbivore)	1100
SOIL	Generic plant (Terrestrial autotroph - producer)	6.8
SOIL	Montane shrew (Mammalian insectivore)	210
SOIL	Red fox (Mammalian top carnivore)	5800
WATER	Aquatic community organisms - water	0.73
WATER	Deer mouse (water)	520000
WATER	Desert cottontail (water)	1000000
WATER	Montane shrew (water)	440000
WATER	Occult little brown myotis bat (water)	620000
WATER	Red fox (water)	1100000
SEDIMENT	Aquatic community organisms - sediment	0.1
SEDIMENT	Occult little brown myotis bat (Mammalian aerial insectivore)	5.9
SEDIMENT	Violet-green Swallow (Avian aerial insectivore)	2.2
SOIL	American kestrel (Avian intermediate carnivore)	6.9
SOIL	American kestrel (Avian top carnivore)	9.8
SOIL	American robin (Avian herbivore)	0.8
SOIL	American robin (Avian insectivore)	1
SOIL	American robin (Avian omnivore)	0.91
SOIL	Deer mouse (Mammalian omnivore)	3.4
SOIL	Desert cottontail (Mammalian herbivore)	6.2
SOIL	Generic plant (Terrestrial autotroph - producer)	18
SOIL	Montane shrew (Mammalian insectivore)	3
SOIL	Red fox (Mammalian top carnivore)	32
WATER	Aquatic community organisms - water	0.027
WATER	Deer mouse (water)	890
WATER	Desert cottontail (water)	1700
WATER	Montane shrew (water)	760
WATER	Occult little brown myotis bat (water)	1000
WATER	Red fox (water)	1900
SEDIMENT	Aquatic community organisms - sediment	0.15

SEDIMENT	Occult little brown myotis bat (Mammalian aerial insectivore)	83
SOIL	Deer mouse (Mammalian omnivore)	85
SOIL	Desert cottontail (Mammalian herbivore)	280
SOIL	Montane shrew (Mammalian insectivore)	53
SOIL	Red fox (Mammalian top carnivore)	380
WATER	Aquatic community organisms - water	0.014
WATER	Deer mouse (water)	5200
WATER	Desert cottontail (water)	10000
WATER	Montane shrew (water)	4400
WATER	Occult little brown myotis bat (water)	6200
WATER	Red fox (water)	11000
SEDIMENT	Aquatic community organisms - sediment	0.19
SEDIMENT	Occult little brown myotis bat (Mammalian aerial insectivore)	59
SOIL	Deer mouse (Mammalian omnivore)	52
SOIL	Desert cottontail (Mammalian herbivore)	130
SOIL	Generic plant (Terrestrial autotroph - producer)	18
SOIL	Montane shrew (Mammalian insectivore)	38
SOIL	Red fox (Mammalian top carnivore)	250
WATER	Aquatic community organisms - water	9
WATER	Deer mouse (water)	21000
WATER	Desert cottontail (water)	41000
WATER	Montane shrew (water)	17000
WATER	Occult little brown myotis bat (water)	25000
WATER	Red fox (water)	46000
SEDIMENT	Aquatic community organisms - sediment	0.17
SEDIMENT	Occult little brown myotis bat (Mammalian aerial insectivore)	32
SOIL	Deer mouse (Mammalian omnivore)	47
SOIL	Desert cottontail (Mammalian herbivore)	540
SOIL	Montane shrew (Mammalian insectivore)	24
SOIL	Red fox (Mammalian top carnivore)	94
WATER	Aquatic community organisms - water	7.6
WATER	Deer mouse (water)	37000
WATER	Desert cottontail (water)	74000
WATER	Montane shrew (water)	32000
WATER	Occult little brown myotis bat (water)	45000
WATER	Red fox (water)	83000
SEDIMENT	Aquatic community organisms - sediment	0.24
SEDIMENT	Occult little brown myotis bat (Mammalian aerial insectivore)	93
SOIL	Deer mouse (Mammalian omnivore)	100
SOIL	Desert cottontail (Mammalian herbivore)	350
SOIL	Montane shrew (Mammalian insectivore)	62
SOIL	Red fox (Mammalian top carnivore)	400
WATER	Aquatic community organisms - water	0.0041
WATER	Deer mouse (water)	37000
WATER	Desert cottontail (water)	74000
WATER	Montane shrew (water)	32000
WATER	Occult little brown myotis bat (water)	45000

WATER	Red fox (water)	83000
SEDIMENT	Aquatic community organisms - sediment	0.16
SEDIMENT	Occult little brown myotis bat (Mammalian aerial insectivore)	4.4
SOIL	Deer mouse (Mammalian omnivore)	3.1
SOIL	Desert cottontail (Mammalian herbivore)	6.5
SOIL	Montane shrew (Mammalian insectivore)	2.4
SOIL	Red fox (Mammalian top carnivore)	25
WATER	Aquatic community organisms - water	0.0018
WATER	Deer mouse (water)	890
WATER	Desert cottontail (water)	1700
WATER	Montane shrew (water)	760
WATER	Occult little brown myotis bat (water)	1000
WATER	Red fox (water)	1900
SEDIMENT	Aquatic community organisms - sediment	0.033
SEDIMENT	Occult little brown myotis bat (Mammalian aerial insectivore)	19
SOIL	Deer mouse (Mammalian omnivore)	22
SOIL	Desert cottontail (Mammalian herbivore)	95
SOIL	Montane shrew (Mammalian insectivore)	12
SOIL	Red fox (Mammalian top carnivore)	54
WATER	Aquatic community organisms - water	0.0034
WATER	Deer mouse (water)	7000
WATER	Desert cottontail (water)	13000
WATER	Montane shrew (water)	5900
WATER	Occult little brown myotis bat (water)	8300
WATER	Red fox (water)	15000
SEDIMENT	Aquatic community organisms - sediment	0.42
SEDIMENT	Occult little brown myotis bat (Mammalian aerial insectivore)	28
SOIL	Deer mouse (Mammalian omnivore)	38
SOIL	Desert cottontail (Mammalian herbivore)	260
SOIL	Earthworm (Soil-dwelling invertebrate)	10
SOIL	Montane shrew (Mammalian insectivore)	22
SOIL	Red fox (Mammalian top carnivore)	360
WATER	Aquatic community organisms - water	0.04
WATER	Deer mouse (water)	65000
WATER	Desert cottontail (water)	120000
WATER	Montane shrew (water)	56000
WATER	Occult little brown myotis bat (water)	78000
WATER	Red fox (water)	140000
SEDIMENT	Aquatic community organisms - sediment	0.077
SEDIMENT	Occult little brown myotis bat (Mammalian aerial insectivore)	320
SOIL	Deer mouse (Mammalian omnivore)	340
SOIL	Desert cottontail (Mammalian herbivore)	1100
SOIL	Earthworm (Soil-dwelling invertebrate)	3.7
SOIL	Montane shrew (Mammalian insectivore)	250
SOIL	Red fox (Mammalian top carnivore)	9300
WATER	Aquatic community organisms - water	3.9
WATER	Deer mouse (water)	650000

WATER	Desert cottontail (water)	1200000
WATER	Montane shrew (water)	560000
WATER	Occult little brown myotis bat (water)	780000
WATER	Red fox (water)	1400000
SEDIMENT	Aquatic community organisms - sediment	0.2
SEDIMENT	Occult little brown myotis bat (Mammalian aerial insectivore)	93
SOIL	Deer mouse (Mammalian omnivore)	110
SOIL	Desert cottontail (Mammalian herbivore)	590
SOIL	Montane shrew (Mammalian insectivore)	62
SOIL	Red fox (Mammalian top carnivore)	270
WATER	Aquatic community organisms - water	4.3
WATER	Deer mouse (water)	37000
WATER	Desert cottontail (water)	74000
WATER	Montane shrew (water)	32000
WATER	Occult little brown myotis bat (water)	45000
WATER	Red fox (water)	83000
SEDIMENT	Aquatic community organisms - sediment	0.076
SEDIMENT	Occult little brown myotis bat (Mammalian aerial insectivore)	20
SOIL	Deer mouse (Mammalian omnivore)	24
SOIL	Desert cottontail (Mammalian herbivore)	100
SOIL	Montane shrew (Mammalian insectivore)	16
SOIL	Red fox (Mammalian top carnivore)	850
WATER	Aquatic community organisms - water	330
WATER	Deer mouse (water)	84000
WATER	Desert cottontail (water)	160000
WATER	Montane shrew (water)	71000
WATER	Occult little brown myotis bat (water)	100000
WATER	Red fox (water)	180000
SEDIMENT	Aquatic community organisms - sediment	0.17
SEDIMENT	Occult little brown myotis bat (Mammalian aerial insectivore)	35
SEDIMENT	Violet-green Swallow (Avian aerial insectivore)	22
SOIL	American kestrel (Avian intermediate carnivore)	100
SOIL	American kestrel (Avian top carnivore)	590
SOIL	American robin (Avian herbivore)	3.4
SOIL	American robin (Avian insectivore)	16
SOIL	American robin (Avian omnivore)	5.7
SOIL	Deer mouse (Mammalian omnivore)	9.7
SOIL	Desert cottontail (Mammalian herbivore)	12
SOIL	Generic plant (Terrestrial autotroph - producer)	1
SOIL	Montane shrew (Mammalian insectivore)	27
SOIL	Red fox (Mammalian top carnivore)	1200
WATER	American kestrel (water)	110
WATER	American robin (water)	99
WATER	Aquatic community organisms - water	1.1
WATER	Deer mouse (water)	2600
WATER	Desert cottontail (water)	5100
WATER	Montane shrew (water)	2200

WATER	Occult little brown myotis bat (water)	3100
WATER	Red fox (water)	5800
WATER	Violet-green Swallow (water)	57
SEDIMENT	Aquatic community organisms - sediment	0.2
SEDIMENT	Occult little brown myotis bat (Mammalian aerial insectivore)	14
SOIL	Deer mouse (Mammalian omnivore)	15
SOIL	Desert cottontail (Mammalian herbivore)	59
SOIL	Earthworm (Soil-dwelling invertebrate)	5.5
SOIL	Montane shrew (Mammalian insectivore)	10
SOIL	Red fox (Mammalian top carnivore)	290
WATER	Aquatic community organisms - water	6.3
WATER	Deer mouse (water)	27000
WATER	Desert cottontail (water)	52000
WATER	Montane shrew (water)	23000
WATER	Occult little brown myotis bat (water)	32000
WATER	Red fox (water)	59000
SEDIMENT	Aquatic community organisms - sediment	0.19
SEDIMENT	Occult little brown myotis bat (Mammalian aerial insectivore)	29
SEDIMENT	Violet-green Swallow (Avian aerial insectivore)	47
SOIL	American kestrel (Avian intermediate carnivore)	190
SOIL	American kestrel (Avian top carnivore)	460
SOIL	American robin (Avian herbivore)	71
SOIL	American robin (Avian insectivore)	34
SOIL	American robin (Avian omnivore)	46
SOIL	Deer mouse (Mammalian omnivore)	32
SOIL	Desert cottontail (Mammalian herbivore)	110
SOIL	Earthworm (Soil-dwelling invertebrate)	10
SOIL	Montane shrew (Mammalian insectivore)	22
SOIL	Red fox (Mammalian top carnivore)	360
WATER	Aquatic community organisms - water	0.025
WATER	Deer mouse (water)	39000
WATER	Desert cottontail (water)	77000
WATER	Montane shrew (water)	33000
WATER	Occult little brown myotis bat (water)	47000
WATER	Red fox (water)	87000
SEDIMENT	Aquatic community organisms - sediment	0.059
SEDIMENT	Occult little brown myotis bat (Mammalian aerial insectivore)	1.3
SOIL	Deer mouse (Mammalian omnivore)	2.1
SOIL	Desert cottontail (Mammalian herbivore)	48
SOIL	Montane shrew (Mammalian insectivore)	1
SOIL	Red fox (Mammalian top carnivore)	46
WATER	Aquatic community organisms - water	0.014
WATER	Deer mouse (water)	180
WATER	Desert cottontail (water)	360
WATER	Montane shrew (water)	150
WATER	Occult little brown myotis bat (water)	220
WATER	Red fox (water)	400

SEDIMENT	Aquatic community organisms - sediment	0.059
SEDIMENT	Occult little brown myotis bat (Mammalian aerial insectivore)	0.48
SEDIMENT	Violet-green Swallow (Avian aerial insectivore)	0.054
SOIL	American kestrel (Avian intermediate carnivore)	0.26
SOIL	American kestrel (Avian top carnivore)	1.4
SOIL	American robin (Avian herbivore)	1
SOIL	American robin (Avian insectivore)	0.041
SOIL	American robin (Avian omnivore)	0.079
SOIL	Deer mouse (Mammalian omnivore)	0.76
SOIL	Desert cottontail (Mammalian herbivore)	30
SOIL	Montane shrew (Mammalian insectivore)	0.38
SOIL	Red fox (Mammalian top carnivore)	16
WATER	American kestrel (water)	830
WATER	American robin (water)	710
WATER	Aquatic community organisms - water	0.014
WATER	Deer mouse (water)	490
WATER	Desert cottontail (water)	960
WATER	Montane shrew (water)	420
WATER	Occult little brown myotis bat (water)	590
WATER	Red fox (water)	1000
WATER	Violet-green Swallow (water)	410
SEDIMENT	Aquatic community organisms - sediment	0.059
SEDIMENT	Occult little brown myotis bat (Mammalian aerial insectivore)	0.009
SEDIMENT	Violet-green Swallow (Avian aerial insectivore)	0.054
SOIL	American kestrel (Avian intermediate carnivore)	0.2
SOIL	American kestrel (Avian top carnivore)	0.34
SOIL	American robin (Avian herbivore)	1
SOIL	American robin (Avian insectivore)	0.041
SOIL	American robin (Avian omnivore)	0.079
SOIL	Deer mouse (Mammalian omnivore)	0.014
SOIL	Desert cottontail (Mammalian herbivore)	0.59
SOIL	Montane shrew (Mammalian insectivore)	0.0072
SOIL	Red fox (Mammalian top carnivore)	0.075
WATER	American kestrel (water)	830
WATER	American robin (water)	710
WATER	Aquatic community organisms - water	0.014
WATER	Deer mouse (water)	52
WATER	Desert cottontail (water)	100
WATER	Montane shrew (water)	44
WATER	Occult little brown myotis bat (water)	62
WATER	Red fox (water)	110
WATER	Violet-green Swallow (water)	410
SEDIMENT	Aquatic community organisms - sediment	0.06
SEDIMENT	Occult little brown myotis bat (Mammalian aerial insectivore)	0.56
SEDIMENT	Violet-green Swallow (Avian aerial insectivore)	0.054
SOIL	American kestrel (Avian intermediate carnivore)	0.17
SOIL	American kestrel (Avian top carnivore)	0.22

SOIL	American robin (Avian herbivore)	1.3
SOIL	American robin (Avian insectivore)	0.041
SOIL	American robin (Avian omnivore)	0.08
SOIL	Deer mouse (Mammalian omnivore)	0.88
SOIL	Desert cottontail (Mammalian herbivore)	52
SOIL	Generic plant (Terrestrial autotroph - producer)	160
SOIL	Montane shrew (Mammalian insectivore)	0.44
SOIL	Red fox (Mammalian top carnivore)	0.15
WATER	American kestrel (water)	830
WATER	American robin (water)	710
WATER	Aquatic community organisms - water	0.014
WATER	Deer mouse (water)	160
WATER	Desert cottontail (water)	310
WATER	Montane shrew (water)	130
WATER	Occult little brown myotis bat (water)	190
WATER	Red fox (water)	360
WATER	Violet-green Swallow (water)	410
SEDIMENT	Aquatic community organisms - sediment	0.059
SEDIMENT	Occult little brown myotis bat (Mammalian aerial insectivore)	12
SEDIMENT	Violet-green Swallow (Avian aerial insectivore)	1.1
SOIL	American kestrel (Avian intermediate carnivore)	3.7
SOIL	American kestrel (Avian top carnivore)	4.6
SOIL	American robin (Avian herbivore)	46
SOIL	American robin (Avian insectivore)	0.88
SOIL	American robin (Avian omnivore)	1.7
SOIL	Deer mouse (Mammalian omnivore)	20
SOIL	Desert cottontail (Mammalian herbivore)	3000
SOIL	Montane shrew (Mammalian insectivore)	10
SOIL	Red fox (Mammalian top carnivore)	0.14
WATER	American kestrel (water)	8900
WATER	American robin (water)	7600
WATER	Aquatic community organisms - water	0.014
WATER	Deer mouse (water)	160
WATER	Desert cottontail (water)	310
WATER	Montane shrew (water)	130
WATER	Occult little brown myotis bat (water)	190
WATER	Red fox (water)	360
WATER	Violet-green Swallow (water)	4400
SEDIMENT	Algae (Aquatic autotroph - producer) - sediment	66000
SEDIMENT	Aquatic snails (Aquatic herbivore - grazer) - sediment	66000
SEDIMENT	Daphnids (Aquatic omnivore/ herbivore) - sediment	66000
SEDIMENT	Fish (Aquatic intermediate carnivore) - sediment	66000
SEDIMENT	Occult little brown myotis bat (Mammalian aerial insectivore)	260
SEDIMENT	Violet-green Swallow (Avian aerial insectivore)	220
SOIL	American kestrel (Avian intermediate carnivore)	35000
SOIL	American kestrel (Avian top carnivore)	62000
SOIL	American robin (Avian herbivore)	13000

SOIL	American robin (Avian insectivore)	4000
SOIL	American robin (Avian omnivore)	4000
SOIL	Deer mouse (Mammalian omnivore)	32000
SOIL	Desert cottontail (Mammalian herbivore)	32000
SOIL	Earthworm (Soil-dwelling invertebrate)	44
SOIL	Generic plant (Terrestrial autotroph - producer)	21000
SOIL	Montane shrew (Mammalian insectivore)	31000
SOIL	Red fox (Mammalian top carnivore)	26000
WATER	Algae (Aquatic autotroph - producer) - water	5.8
WATER	American kestrel (water)	76000000
WATER	American robin (water)	75000000
WATER	Aquatic snails (Aquatic herbivore - grazer) - water	170
WATER	Daphnids (Aquatic omnivore/ herbivore) - water	170
WATER	Deer mouse (water)	1300000000
WATER	Desert cottontail (water)	91000000
WATER	Fish (Aquatic intermediate carnivore) - water	170
WATER	Montane shrew (water)	780000000
WATER	Occult little brown myotis bat (water)	170000000
WATER	Red fox (water)	5700000
WATER	Violet-green Swallow (water)	180000000
SEDIMENT	Algae (Aquatic autotroph - producer) - sediment	2200
SEDIMENT	Aquatic snails (Aquatic herbivore - grazer) - sediment	2200
SEDIMENT	Daphnids (Aquatic omnivore/ herbivore) - sediment	2200
SEDIMENT	Fish (Aquatic intermediate carnivore) - sediment	2200
SEDIMENT	Occult little brown myotis bat (Mammalian aerial insectivore)	1400
SEDIMENT	Violet-green Swallow (Avian aerial insectivore)	330
SOIL	American kestrel (Avian intermediate carnivore)	1700
SOIL	American kestrel (Avian top carnivore)	1300
SOIL	American robin (Avian herbivore)	1900
SOIL	American robin (Avian insectivore)	1700
SOIL	American robin (Avian omnivore)	1700
SOIL	Deer mouse (Mammalian omnivore)	1100
SOIL	Desert cottontail (Mammalian herbivore)	1000
SOIL	Earthworm (Soil-dwelling invertebrate)	770
SOIL	Generic plant (Terrestrial autotroph - producer)	1100
SOIL	Montane shrew (Mammalian insectivore)	1100
SOIL	Red fox (Mammalian top carnivore)	320
WATER	Algae (Aquatic autotroph - producer) - water	1900
WATER	American kestrel (water)	140000000
WATER	American robin (water)	140000000
WATER	Aquatic snails (Aquatic herbivore - grazer) - water	9400
WATER	Daphnids (Aquatic omnivore/ herbivore) - water	9400
WATER	Deer mouse (water)	330000000
WATER	Desert cottontail (water)	27000000
WATER	Fish (Aquatic intermediate carnivore) - water	470
WATER	Montane shrew (water)	300000000
WATER	Occult little brown myotis bat (water)	990000000

WATER	Red fox (water)	7500000
WATER	Violet-green Swallow (water)	270000000
SEDIMENT	Algae (Aquatic autotroph - producer) - sediment	5000
SEDIMENT	Aquatic snails (Aquatic herbivore - grazer) - sediment	5000
SEDIMENT	Daphnids (Aquatic omnivore/ herbivore) - sediment	5000
SEDIMENT	Fish (Aquatic intermediate carnivore) - sediment	5000
SEDIMENT	Occult little brown myotis bat (Mammalian aerial insectivore)	3200
SEDIMENT	Violet-green Swallow (Avian aerial insectivore)	720
SOIL	American kestrel (Avian intermediate carnivore)	3700
SOIL	American kestrel (Avian top carnivore)	2900
SOIL	American robin (Avian herbivore)	4200
SOIL	American robin (Avian insectivore)	3800
SOIL	American robin (Avian omnivore)	3700
SOIL	Deer mouse (Mammalian omnivore)	2400
SOIL	Desert cottontail (Mammalian herbivore)	2300
SOIL	Earthworm (Soil-dwelling invertebrate)	1700
SOIL	Generic plant (Terrestrial autotroph - producer)	2300
SOIL	Montane shrew (Mammalian insectivore)	2400
SOIL	Red fox (Mammalian top carnivore)	680
WATER	Algae (Aquatic autotroph - producer) - water	4600
WATER	American kestrel (water)	310000000
WATER	American robin (water)	310000000
WATER	Aquatic snails (Aquatic herbivore - grazer) - water	23000
WATER	Daphnids (Aquatic omnivore/ herbivore) - water	23000
WATER	Deer mouse (water)	730000000
WATER	Desert cottontail (water)	59000000
WATER	Fish (Aquatic intermediate carnivore) - water	1100
WATER	Montane shrew (water)	650000000
WATER	Occult little brown myotis bat (water)	2100000000
WATER	Red fox (water)	16000000
WATER	Violet-green Swallow (water)	580000000

SEDIMENT	Algae (Aquatic autotroph - producer) - sediment	1400
SEDIMENT	Aquatic snails (Aquatic herbivore - grazer) - sediment	1400
SEDIMENT	Daphnids (Aquatic omnivore/ herbivore) - sediment	1400
SEDIMENT	Fish (Aquatic intermediate carnivore) - sediment	1400
SEDIMENT	Occult little brown myotis bat (Mammalian aerial insectivore)	960
SEDIMENT	Violet-green Swallow (Avian aerial insectivore)	210
SOIL	American kestrel (Avian intermediate carnivore)	1500
SOIL	American kestrel (Avian top carnivore)	1500
SOIL	American robin (Avian herbivore)	1500
SOIL	American robin (Avian insectivore)	1500
SOIL	American robin (Avian omnivore)	1500
SOIL	Deer mouse (Mammalian omnivore)	760
SOIL	Desert cottontail (Mammalian herbivore)	760
SOIL	Earthworm (Soil-dwelling invertebrate)	550
SOIL	Generic plant (Terrestrial autotroph - producer)	750
SOIL	Montane shrew (Mammalian insectivore)	760
SOIL	Red fox (Mammalian top carnivore)	700
WATER	Algae (Aquatic autotroph - producer) - water	760
WATER	American kestrel (water)	1900000000
WATER	American robin (water)	1800000000
WATER	Aquatic snails (Aquatic herbivore - grazer) - water	380
WATER	Daphnids (Aquatic omnivore/ herbivore) - water	380
WATER	Deer mouse (water)	3900000000
WATER	Desert cottontail (water)	330000000
WATER	Fish (Aquatic intermediate carnivore) - water	2300
WATER	Montane shrew (water)	3700000000
WATER	Occult little brown myotis bat (water)	12000000000
WATER	Red fox (water)	97000000
WATER	Violet-green Swallow (water)	3400000000
SEDIMENT	Algae (Aquatic autotroph - producer) - sediment	1000
SEDIMENT	Aquatic snails (Aquatic herbivore - grazer) - sediment	1000
SEDIMENT	Daphnids (Aquatic omnivore/ herbivore) - sediment	1000
SEDIMENT	Fish (Aquatic intermediate carnivore) - sediment	1000
SEDIMENT	Occult little brown myotis bat (Mammalian aerial insectivore)	74
SEDIMENT	Violet-green Swallow (Avian aerial insectivore)	17
SOIL	American kestrel (Avian intermediate carnivore)	1000
SOIL	American kestrel (Avian top carnivore)	1000
SOIL	American robin (Avian herbivore)	1000
SOIL	American robin (Avian insectivore)	970
SOIL	American robin (Avian omnivore)	970
SOIL	Deer mouse (Mammalian omnivore)	530
SOIL	Desert cottontail (Mammalian herbivore)	530
SOIL	Earthworm (Soil-dwelling invertebrate)	380
SOIL	Generic plant (Terrestrial autotroph - producer)	520
SOIL	Montane shrew (Mammalian insectivore)	520
SOIL	Red fox (Mammalian top carnivore)	500
WATER	Algae (Aquatic autotroph - producer) - water	100

WATER	American kestrel (water)	220000000
WATER	American robin (water)	220000000
WATER	Aquatic snails (Aquatic herbivore - grazer) - water	170
WATER	Daphnids (Aquatic omnivore/ herbivore) - water	170
WATER	Deer mouse (water)	1200000000
WATER	Desert cottontail (water)	90000000
WATER	Fish (Aquatic intermediate carnivore) - water	1700
WATER	Montane shrew (water)	830000000
WATER	Occult little brown myotis bat (water)	1400000000
WATER	Red fox (water)	12000000
WATER	Violet-green Swallow (water)	420000000
SEDIMENT	Algae (Aquatic autotroph - producer) - sediment	9000
SEDIMENT	Aquatic snails (Aquatic herbivore - grazer) - sediment	9000
SEDIMENT	Daphnids (Aquatic omnivore/ herbivore) - sediment	9000
SEDIMENT	Fish (Aquatic intermediate carnivore) - sediment	9000
SEDIMENT	Occult little brown myotis bat (Mammalian aerial insectivore)	2500
SEDIMENT	Violet-green Swallow (Avian aerial insectivore)	740
SOIL	American kestrel (Avian intermediate carnivore)	9000
SOIL	American kestrel (Avian top carnivore)	9000
SOIL	American robin (Avian herbivore)	7600
SOIL	American robin (Avian insectivore)	7900
SOIL	American robin (Avian omnivore)	7500
SOIL	Deer mouse (Mammalian omnivore)	4500
SOIL	Desert cottontail (Mammalian herbivore)	4500
SOIL	Earthworm (Soil-dwelling invertebrate)	2800
SOIL	Generic plant (Terrestrial autotroph - producer)	4200
SOIL	Montane shrew (Mammalian insectivore)	4500
SOIL	Red fox (Mammalian top carnivore)	4400
WATER	Algae (Aquatic autotroph - producer) - water	250
WATER	American kestrel (water)	290000000
WATER	American robin (water)	280000000
WATER	Aquatic snails (Aquatic herbivore - grazer) - water	1000
WATER	Daphnids (Aquatic omnivore/ herbivore) - water	1000
WATER	Deer mouse (water)	2700000000
WATER	Desert cottontail (water)	190000000
WATER	Fish (Aquatic intermediate carnivore) - water	250
WATER	Montane shrew (water)	1600000000
WATER	Occult little brown myotis bat (water)	1600000000
WATER	Red fox (water)	17000000
WATER	Violet-green Swallow (water)	590000000
SEDIMENT	Algae (Aquatic autotroph - producer) - sediment	7600
SEDIMENT	Aquatic snails (Aquatic herbivore - grazer) - sediment	7600
SEDIMENT	Daphnids (Aquatic omnivore/ herbivore) - sediment	7600
SEDIMENT	Fish (Aquatic intermediate carnivore) - sediment	7600
SEDIMENT	Occult little brown myotis bat (Mammalian aerial insectivore)	13
SEDIMENT	Violet-green Swallow (Avian aerial insectivore)	12
SOIL	American kestrel (Avian intermediate carnivore)	1900

SOIL	American kestrel (Avian top carnivore)	2000
SOIL	American robin (Avian herbivore)	750
SOIL	American robin (Avian insectivore)	220
SOIL	American robin (Avian omnivore)	220
SOIL	Deer mouse (Mammalian omnivore)	3300
SOIL	Desert cottontail (Mammalian herbivore)	3300
SOIL	Earthworm (Soil-dwelling invertebrate)	50
SOIL	Generic plant (Terrestrial autotroph - producer)	2700
SOIL	Montane shrew (Mammalian insectivore)	3200
SOIL	Red fox (Mammalian top carnivore)	470
WATER	Algae (Aquatic autotroph - producer) - water	65
WATER	American kestrel (water)	4100000
WATER	American robin (water)	4000000
WATER	Aquatic snails (Aquatic herbivore - grazer) - water	650
WATER	Daphnids (Aquatic omnivore/ herbivore) - water	650
WATER	Deer mouse (water)	75000000
WATER	Desert cottontail (water)	5100000
WATER	Fish (Aquatic intermediate carnivore) - water	7.9
WATER	Montane shrew (water)	43000000
WATER	Occult little brown myotis bat (water)	8900000
WATER	Red fox (water)	310000
WATER	Violet-green Swallow (water)	9900000
SEDIMENT	Algae (Aquatic autotroph - producer) - sediment	400000
SEDIMENT	Aquatic snails (Aquatic herbivore - grazer) - sediment	400000
SEDIMENT	Daphnids (Aquatic omnivore/ herbivore) - sediment	400000
SEDIMENT	Fish (Aquatic intermediate carnivore) - sediment	400000
SEDIMENT	Occult little brown myotis bat (Mammalian aerial insectivore)	120
SEDIMENT	Violet-green Swallow (Avian aerial insectivore)	110
SOIL	American kestrel (Avian intermediate carnivore)	32000
SOIL	American kestrel (Avian top carnivore)	130000
SOIL	American robin (Avian herbivore)	8300
SOIL	American robin (Avian insectivore)	2000
SOIL	American robin (Avian omnivore)	2100
SOIL	Deer mouse (Mammalian omnivore)	110000
SOIL	Desert cottontail (Mammalian herbivore)	120000
SOIL	Earthworm (Soil-dwelling invertebrate)	44
SOIL	Generic plant (Terrestrial autotroph - producer)	110000
SOIL	Montane shrew (Mammalian insectivore)	92000
SOIL	Red fox (Mammalian top carnivore)	30000
WATER	Algae (Aquatic autotroph - producer) - water	19
WATER	American kestrel (water)	37000000
WATER	American robin (water)	37000000
WATER	Aquatic snails (Aquatic herbivore - grazer) - water	170
WATER	Daphnids (Aquatic omnivore/ herbivore) - water	170
WATER	Deer mouse (water)	660000000
WATER	Desert cottontail (water)	45000000
WATER	Fish (Aquatic intermediate carnivore) - water	69

WATER	Montane shrew (water)	380000000
WATER	Occult little brown myotis bat (water)	85000000
WATER	Red fox (water)	2800000
WATER	Violet-green Swallow (water)	89000000
SEDIMENT	Algae (Aquatic autotroph - producer) - sediment	710000
SEDIMENT	Aquatic snails (Aquatic herbivore - grazer) - sediment	710000
SEDIMENT	Daphnids (Aquatic omnivore/ herbivore) - sediment	710000
SEDIMENT	Fish (Aquatic intermediate carnivore) - sediment	710000
SEDIMENT	Occult little brown myotis bat (Mammalian aerial insectivore)	120
SEDIMENT	Violet-green Swallow (Avian aerial insectivore)	110
SOIL	American kestrel (Avian intermediate carnivore)	34000
SOIL	American kestrel (Avian top carnivore)	160000
SOIL	American robin (Avian herbivore)	8600
SOIL	American robin (Avian insectivore)	2100
SOIL	American robin (Avian omnivore)	2100
SOIL	Deer mouse (Mammalian omnivore)	150000
SOIL	Desert cottontail (Mammalian herbivore)	170000
SOIL	Earthworm (Soil-dwelling invertebrate)	47
SOIL	Generic plant (Terrestrial autotroph - producer)	160000
SOIL	Montane shrew (Mammalian insectivore)	110000
SOIL	Red fox (Mammalian top carnivore)	33000
WATER	Algae (Aquatic autotroph - producer) - water	20
WATER	American kestrel (water)	38000000
WATER	American robin (water)	37000000
WATER	Aquatic snails (Aquatic herbivore - grazer) - water	180
WATER	Daphnids (Aquatic omnivore/ herbivore) - water	180
WATER	Deer mouse (water)	700000000
WATER	Desert cottontail (water)	48000000
WATER	Fish (Aquatic intermediate carnivore) - water	74
WATER	Montane shrew (water)	400000000
WATER	Occult little brown myotis bat (water)	81000000
WATER	Red fox (water)	2900000
WATER	Violet-green Swallow (water)	92000000
SEDIMENT	Algae (Aquatic autotroph - producer) - sediment	760000
SEDIMENT	Aquatic snails (Aquatic herbivore - grazer) - sediment	760000
SEDIMENT	Daphnids (Aquatic omnivore/ herbivore) - sediment	760000
SEDIMENT	Fish (Aquatic intermediate carnivore) - sediment	760000
SEDIMENT	Occult little brown myotis bat (Mammalian aerial insectivore)	1200000
SEDIMENT	Violet-green Swallow (Avian aerial insectivore)	280000
SOIL	American kestrel (Avian intermediate carnivore)	730000
SOIL	American kestrel (Avian top carnivore)	730000
SOIL	American robin (Avian herbivore)	720000
SOIL	American robin (Avian insectivore)	660000
SOIL	American robin (Avian omnivore)	670000
SOIL	Deer mouse (Mammalian omnivore)	360000
SOIL	Desert cottontail (Mammalian herbivore)	360000

SOIL	Earthworm (Soil-dwelling invertebrate)	960
SOIL	Generic plant (Terrestrial autotroph - producer)	350000
SOIL	Montane shrew (Mammalian insectivore)	360000
SOIL	Red fox (Mammalian top carnivore)	360000
WATER	Algae (Aquatic autotroph - producer) - water	420
WATER	American kestrel (water)	1.2E+11
WATER	American robin (water)	1.2E+11
WATER	Aquatic snails (Aquatic herbivore - grazer) - water	3700
WATER	Daphnids (Aquatic omnivore/ herbivore) - water	3700
WATER	Deer mouse (water)	2.5E+11
WATER	Desert cottontail (water)	22000000000
WATER	Fish (Aquatic intermediate carnivore) - water	1500
WATER	Montane shrew (water)	2.4E+11
WATER	Occult little brown myotis bat (water)	8.4E+11
WATER	Red fox (water)	6400000000
WATER	Violet-green Swallow (water)	2.2E+11
SEDIMENT	Algae (Aquatic autotroph - producer) - sediment	1400
SEDIMENT	Aquatic snails (Aquatic herbivore - grazer) - sediment	1400
SEDIMENT	Daphnids (Aquatic omnivore/ herbivore) - sediment	1400
SEDIMENT	Fish (Aquatic intermediate carnivore) - sediment	1400
SEDIMENT	Occult little brown myotis bat (Mammalian aerial insectivore)	0.3
SEDIMENT	Violet-green Swallow (Avian aerial insectivore)	0.21
SOIL	American kestrel (Avian intermediate carnivore)	340
SOIL	American kestrel (Avian top carnivore)	380
SOIL	American robin (Avian herbivore)	93
SOIL	American robin (Avian insectivore)	40
SOIL	American robin (Avian omnivore)	39
SOIL	Deer mouse (Mammalian omnivore)	610
SOIL	Desert cottontail (Mammalian herbivore)	480
SOIL	Earthworm (Soil-dwelling invertebrate)	8.1
SOIL	Generic plant (Terrestrial autotroph - producer)	200
SOIL	Montane shrew (Mammalian insectivore)	580
SOIL	Red fox (Mammalian top carnivore)	83
WATER	Algae (Aquatic autotroph - producer) - water	0.1
WATER	American kestrel (water)	750000
WATER	American robin (water)	740000
WATER	Aquatic snails (Aquatic herbivore - grazer) - water	3.2
WATER	Daphnids (Aquatic omnivore/ herbivore) - water	3.2
WATER	Deer mouse (water)	12000000
WATER	Desert cottontail (water)	850000
WATER	Fish (Aquatic intermediate carnivore) - water	64
WATER	Montane shrew (water)	7200000
WATER	Occult little brown myotis bat (water)	2000000
WATER	Red fox (water)	55000
WATER	Violet-green Swallow (water)	1700000
SEDIMENT	Algae (Aquatic autotroph - producer) - sediment	2800
SEDIMENT	Aquatic snails (Aquatic herbivore - grazer) - sediment	2800

SEDIMENT	Daphnids (Aquatic omnivore/ herbivore) - sediment	2800
SEDIMENT	Fish (Aquatic intermediate carnivore) - sediment	2800
SEDIMENT	Occult little brown myotis bat (Mammalian aerial insectivore)	0.77
SEDIMENT	Violet-green Swallow (Avian aerial insectivore)	0.26
SOIL	American kestrel (Avian intermediate carnivore)	500
SOIL	American kestrel (Avian top carnivore)	550
SOIL	American robin (Avian herbivore)	120
SOIL	American robin (Avian insectivore)	55
SOIL	American robin (Avian omnivore)	52
SOIL	Deer mouse (Mammalian omnivore)	1000
SOIL	Desert cottontail (Mammalian herbivore)	690
SOIL	Earthworm (Soil-dwelling invertebrate)	6.8
SOIL	Generic plant (Terrestrial autotroph - producer)	200
SOIL	Montane shrew (Mammalian insectivore)	960
SOIL	Red fox (Mammalian top carnivore)	100
WATER	Algae (Aquatic autotroph - producer) - water	0.09
WATER	American kestrel (water)	1000000
WATER	American robin (water)	990000
WATER	Aquatic snails (Aquatic herbivore - grazer) - water	2.7
WATER	Daphnids (Aquatic omnivore/ herbivore) - water	2.7
WATER	Deer mouse (water)	11000000
WATER	Desert cottontail (water)	760000
WATER	Fish (Aquatic intermediate carnivore) - water	54
WATER	Montane shrew (water)	6700000
WATER	Occult little brown myotis bat (water)	5100000
WATER	Red fox (water)	64000
WATER	Violet-green Swallow (water)	2100000
SEDIMENT	Algae (Aquatic autotroph - producer) - sediment	18000
SEDIMENT	Aquatic snails (Aquatic herbivore - grazer) - sediment	18000
SEDIMENT	Daphnids (Aquatic omnivore/ herbivore) - sediment	18000
SEDIMENT	Fish (Aquatic intermediate carnivore) - sediment	18000
SEDIMENT	Occult little brown myotis bat (Mammalian aerial insectivore)	49000
SEDIMENT	Violet-green Swallow (Avian aerial insectivore)	11000
SOIL	American kestrel (Avian intermediate carnivore)	15000
SOIL	American kestrel (Avian top carnivore)	12000
SOIL	American robin (Avian herbivore)	17000
SOIL	American robin (Avian insectivore)	16000
SOIL	American robin (Avian omnivore)	16000
SOIL	Deer mouse (Mammalian omnivore)	9000
SOIL	Desert cottontail (Mammalian herbivore)	8900
SOIL	Earthworm (Soil-dwelling invertebrate)	6500
SOIL	Generic plant (Terrestrial autotroph - producer)	8900
SOIL	Montane shrew (Mammalian insectivore)	9000
SOIL	Red fox (Mammalian top carnivore)	3400
WATER	Algae (Aquatic autotroph - producer) - water	90000
WATER	American kestrel (water)	4800000000
WATER	American robin (water)	4700000000

WATER	Aquatic snails (Aquatic herbivore - grazer) - water	90000
WATER	Daphnids (Aquatic omnivore/ herbivore) - water	90000
WATER	Deer mouse (water)	10000000000
WATER	Desert cottontail (water)	850000000
WATER	Fish (Aquatic intermediate carnivore) - water	90000
WATER	Montane shrew (water)	9600000000
WATER	Occult little brown myotis bat (water)	32000000000
WATER	Red fox (water)	240000000
WATER	Violet-green Swallow (water)	8800000000
SEDIMENT	Algae (Aquatic autotroph - producer) - sediment	3400
SEDIMENT	Aquatic snails (Aquatic herbivore - grazer) - sediment	3400
SEDIMENT	Daphnids (Aquatic omnivore/ herbivore) - sediment	3400
SEDIMENT	Fish (Aquatic intermediate carnivore) - sediment	3400
SEDIMENT	Occult little brown myotis bat (Mammalian aerial insectivore)	230
SEDIMENT	Violet-green Swallow (Avian aerial insectivore)	150
SOIL	American kestrel (Avian intermediate carnivore)	2400
SOIL	American kestrel (Avian top carnivore)	1900
SOIL	American robin (Avian herbivore)	600
SOIL	American robin (Avian insectivore)	1500
SOIL	American robin (Avian omnivore)	930
SOIL	Deer mouse (Mammalian omnivore)	1700
SOIL	Desert cottontail (Mammalian herbivore)	1300
SOIL	Earthworm (Soil-dwelling invertebrate)	1200
SOIL	Generic plant (Terrestrial autotroph - producer)	1300
SOIL	Montane shrew (Mammalian insectivore)	1700
SOIL	Red fox (Mammalian top carnivore)	560
WATER	Algae (Aquatic autotroph - producer) - water	570
WATER	American kestrel (water)	52000000
WATER	American robin (water)	51000000
WATER	Aquatic snails (Aquatic herbivore - grazer) - water	17000
WATER	Daphnids (Aquatic omnivore/ herbivore) - water	17000
WATER	Deer mouse (water)	830000000
WATER	Desert cottontail (water)	57000000
WATER	Fish (Aquatic intermediate carnivore) - water	33000
WATER	Montane shrew (water)	480000000
WATER	Occult little brown myotis bat (water)	150000000
WATER	Red fox (water)	3800000
WATER	Violet-green Swallow (water)	120000000
SEDIMENT	Algae (Aquatic autotroph - producer) - sediment	1600
SEDIMENT	Aquatic snails (Aquatic herbivore - grazer) - sediment	1600
SEDIMENT	Daphnids (Aquatic omnivore/ herbivore) - sediment	1600
SEDIMENT	Fish (Aquatic intermediate carnivore) - sediment	1600
SEDIMENT	Occult little brown myotis bat (Mammalian aerial insectivore)	1200
SEDIMENT	Violet-green Swallow (Avian aerial insectivore)	290
SOIL	American kestrel (Avian intermediate carnivore)	1600
SOIL	American kestrel (Avian top carnivore)	1600
SOIL	American robin (Avian herbivore)	1500

SOIL	American robin (Avian insectivore)	1300
SOIL	American robin (Avian omnivore)	1300
SOIL	Deer mouse (Mammalian omnivore)	830
SOIL	Desert cottontail (Mammalian herbivore)	830
SOIL	Earthworm (Soil-dwelling invertebrate)	43
SOIL	Generic plant (Terrestrial autotroph - producer)	810
SOIL	Montane shrew (Mammalian insectivore)	830
SOIL	Red fox (Mammalian top carnivore)	820
WATER	Algae (Aquatic autotroph - producer) - water	5.9
WATER	American kestrel (water)	120000000
WATER	American robin (water)	120000000
WATER	Aquatic snails (Aquatic herbivore - grazer) - water	170
WATER	Daphnids (Aquatic omnivore/ herbivore) - water	170
WATER	Deer mouse (water)	800000000
WATER	Desert cottontail (water)	57000000
WATER	Fish (Aquatic intermediate carnivore) - water	170
WATER	Montane shrew (water)	520000000
WATER	Occult little brown myotis bat (water)	800000000
WATER	Red fox (water)	6800000
WATER	Violet-green Swallow (water)	230000000
SEDIMENT	Algae (Aquatic autotroph - producer) - sediment	3200
SEDIMENT	Aquatic snails (Aquatic herbivore - grazer) - sediment	3200
SEDIMENT	Daphnids (Aquatic omnivore/ herbivore) - sediment	3200
SEDIMENT	Fish (Aquatic intermediate carnivore) - sediment	3200
SEDIMENT	Occult little brown myotis bat (Mammalian aerial insectivore)	120
SEDIMENT	Violet-green Swallow (Avian aerial insectivore)	110
SOIL	American kestrel (Avian intermediate carnivore)	2900
SOIL	American kestrel (Avian top carnivore)	3100
SOIL	American robin (Avian herbivore)	2300
SOIL	American robin (Avian insectivore)	1300
SOIL	American robin (Avian omnivore)	1300
SOIL	Deer mouse (Mammalian omnivore)	1500
SOIL	Desert cottontail (Mammalian herbivore)	1500
SOIL	Earthworm (Soil-dwelling invertebrate)	47
SOIL	Generic plant (Terrestrial autotroph - producer)	1500
SOIL	Montane shrew (Mammalian insectivore)	1500
SOIL	Red fox (Mammalian top carnivore)	1500
WATER	Algae (Aquatic autotroph - producer) - water	6.3
WATER	American kestrel (water)	39000000
WATER	American robin (water)	39000000
WATER	Aquatic snails (Aquatic herbivore - grazer) - water	180
WATER	Daphnids (Aquatic omnivore/ herbivore) - water	180
WATER	Deer mouse (water)	720000000
WATER	Desert cottontail (water)	49000000
WATER	Fish (Aquatic intermediate carnivore) - water	180
WATER	Montane shrew (water)	410000000
WATER	Occult little brown myotis bat (water)	85000000

WATER	Red fox (water)	3000000
WATER	Violet-green Swallow (water)	95000000
SEDIMENT	Algae (Aquatic autotroph - producer) - sediment	270000
SEDIMENT	Aquatic snails (Aquatic herbivore - grazer) - sediment	270000
SEDIMENT	Daphnids (Aquatic omnivore/ herbivore) - sediment	270000
SEDIMENT	Fish (Aquatic intermediate carnivore) - sediment	270000
SEDIMENT	Occult little brown myotis bat (Mammalian aerial insectivore)	130
SEDIMENT	Violet-green Swallow (Avian aerial insectivore)	120
SOIL	American kestrel (Avian intermediate carnivore)	34000
SOIL	American kestrel (Avian top carnivore)	120000
SOIL	American robin (Avian herbivore)	9000
SOIL	American robin (Avian insectivore)	2300
SOIL	American robin (Avian omnivore)	2300
SOIL	Deer mouse (Mammalian omnivore)	93000
SOIL	Desert cottontail (Mammalian herbivore)	96000
SOIL	Earthworm (Soil-dwelling invertebrate)	52
SOIL	Generic plant (Terrestrial autotroph - producer)	27000
SOIL	Montane shrew (Mammalian insectivore)	81000
SOIL	Red fox (Mammalian top carnivore)	31000
WATER	Algae (Aquatic autotroph - producer) - water	6.8
WATER	American kestrel (water)	42000000
WATER	American robin (water)	42000000
WATER	Aquatic snails (Aquatic herbivore - grazer) - water	200
WATER	Daphnids (Aquatic omnivore/ herbivore) - water	200
WATER	Deer mouse (water)	780000000
WATER	Desert cottontail (water)	53000000
WATER	Fish (Aquatic intermediate carnivore) - water	200
WATER	Montane shrew (water)	450000000
WATER	Occult little brown myotis bat (water)	90000000
WATER	Red fox (water)	3200000
WATER	Violet-green Swallow (water)	100000000
SEDIMENT	Algae (Aquatic autotroph - producer) - sediment	320000
SEDIMENT	Aquatic snails (Aquatic herbivore - grazer) - sediment	320000
SEDIMENT	Daphnids (Aquatic omnivore/ herbivore) - sediment	320000
SEDIMENT	Fish (Aquatic intermediate carnivore) - sediment	320000
SEDIMENT	Occult little brown myotis bat (Mammalian aerial insectivore)	16
SEDIMENT	Violet-green Swallow (Avian aerial insectivore)	15
SOIL	American kestrel (Avian intermediate carnivore)	4600
SOIL	American kestrel (Avian top carnivore)	25000
SOIL	American robin (Avian herbivore)	1100
SOIL	American robin (Avian insectivore)	280
SOIL	American robin (Avian omnivore)	280
SOIL	Deer mouse (Mammalian omnivore)	29000
SOIL	Desert cottontail (Mammalian herbivore)	31000
SOIL	Earthworm (Soil-dwelling invertebrate)	6.2
SOIL	Generic plant (Terrestrial autotroph - producer)	3900
SOIL	Montane shrew (Mammalian insectivore)	20000

SOIL	Red fox (Mammalian top carnivore)	4600
WATER	Algae (Aquatic autotroph - producer) - water	0.81
WATER	American kestrel (water)	5000000
WATER	American robin (water)	5000000
WATER	Aquatic snails (Aquatic herbivore - grazer) - water	24
WATER	Daphnids (Aquatic omnivore/ herbivore) - water	24
WATER	Deer mouse (water)	92000000
WATER	Desert cottontail (water)	6300000
WATER	Fish (Aquatic intermediate carnivore) - water	24
WATER	Montane shrew (water)	53000000
WATER	Occult little brown myotis bat (water)	10000000
WATER	Red fox (water)	380000
WATER	Violet-green Swallow (water)	12000000
SEDIMENT	Algae (Aquatic autotroph - producer) - sediment	660000
SEDIMENT	Aquatic snails (Aquatic herbivore - grazer) - sediment	660000
SEDIMENT	Daphnids (Aquatic omnivore/ herbivore) - sediment	660000
SEDIMENT	Fish (Aquatic intermediate carnivore) - sediment	660000
SEDIMENT	Occult little brown myotis bat (Mammalian aerial insectivore)	1300000000
SEDIMENT	Violet-green Swallow (Avian aerial insectivore)	300000000
SOIL	American kestrel (Avian intermediate carnivore)	630000
SOIL	American kestrel (Avian top carnivore)	580000
SOIL	American robin (Avian herbivore)	300000
SOIL	American robin (Avian insectivore)	600000
SOIL	American robin (Avian omnivore)	440000
SOIL	Deer mouse (Mammalian omnivore)	330000
SOIL	Desert cottontail (Mammalian herbivore)	230000
SOIL	Earthworm (Soil-dwelling invertebrate)	48000
SOIL	Generic plant (Terrestrial autotroph - producer)	36000
SOIL	Montane shrew (Mammalian insectivore)	340000
SOIL	Red fox (Mammalian top carnivore)	190000
WATER	Algae (Aquatic autotroph - producer) - water	160000000
WATER	American kestrel (water)	1.3E+12
WATER	American robin (water)	1.3E+12
WATER	Aquatic snails (Aquatic herbivore - grazer) - water	160000000
WATER	Daphnids (Aquatic omnivore/ herbivore) - water	160000000
WATER	Deer mouse (water)	2.7E+12
WATER	Desert cottontail (water)	2.3E+11
WATER	Fish (Aquatic intermediate carnivore) - water	160000000
WATER	Montane shrew (water)	2.6E+12
WATER	Occult little brown myotis bat (water)	9E+12
WATER	Red fox (water)	68000000000
WATER	Violet-green Swallow (water)	2.4E+12
SEDIMENT	Algae (Aquatic autotroph - producer) - sediment	1000000
SEDIMENT	Aquatic snails (Aquatic herbivore - grazer) - sediment	1000000
SEDIMENT	Daphnids (Aquatic omnivore/ herbivore) - sediment	1000000
SEDIMENT	Fish (Aquatic intermediate carnivore) - sediment	1000000
SEDIMENT	Occult little brown myotis bat (Mammalian aerial insectivore)	2700

SEDIMENT	Violet-green Swallow (Avian aerial insectivore)	620
SOIL	American kestrel (Avian intermediate carnivore)	180000
SOIL	American kestrel (Avian top carnivore)	340000
SOIL	American robin (Avian herbivore)	54000
SOIL	American robin (Avian insectivore)	15000
SOIL	American robin (Avian omnivore)	15000
SOIL	Deer mouse (Mammalian omnivore)	160000
SOIL	Desert cottontail (Mammalian herbivore)	170000
SOIL	Earthworm (Soil-dwelling invertebrate)	51
SOIL	Generic plant (Terrestrial autotroph - producer)	15000
SOIL	Montane shrew (Mammalian insectivore)	160000
SOIL	Red fox (Mammalian top carnivore)	57000
WATER	Algae (Aquatic autotroph - producer) - water	22
WATER	American kestrel (water)	270000000
WATER	American robin (water)	260000000
WATER	Aquatic snails (Aquatic herbivore - grazer) - water	190
WATER	Daphnids (Aquatic omnivore/ herbivore) - water	190
WATER	Deer mouse (water)	610000000
WATER	Desert cottontail (water)	50000000
WATER	Fish (Aquatic intermediate carnivore) - water	39
WATER	Montane shrew (water)	550000000
WATER	Occult little brown myotis bat (water)	1800000000
WATER	Red fox (water)	14000000
WATER	Violet-green Swallow (water)	500000000
SEDIMENT	Algae (Aquatic autotroph - producer) - sediment	300000
SEDIMENT	Aquatic snails (Aquatic herbivore - grazer) - sediment	300000
SEDIMENT	Daphnids (Aquatic omnivore/ herbivore) - sediment	300000
SEDIMENT	Fish (Aquatic intermediate carnivore) - sediment	300000
SEDIMENT	Occult little brown myotis bat (Mammalian aerial insectivore)	2700
SEDIMENT	Violet-green Swallow (Avian aerial insectivore)	620
SOIL	American kestrel (Avian intermediate carnivore)	120000
SOIL	American kestrel (Avian top carnivore)	190000
SOIL	American robin (Avian herbivore)	48000
SOIL	American robin (Avian insectivore)	14000
SOIL	American robin (Avian omnivore)	14000
SOIL	Deer mouse (Mammalian omnivore)	91000
SOIL	Desert cottontail (Mammalian herbivore)	96000
SOIL	Earthworm (Soil-dwelling invertebrate)	51
SOIL	Generic plant (Terrestrial autotroph - producer)	14000
SOIL	Montane shrew (Mammalian insectivore)	94000
SOIL	Red fox (Mammalian top carnivore)	45000
WATER	Algae (Aquatic autotroph - producer) - water	22
WATER	American kestrel (water)	270000000
WATER	American robin (water)	260000000
WATER	Aquatic snails (Aquatic herbivore - grazer) - water	190
WATER	Daphnids (Aquatic omnivore/ herbivore) - water	190
WATER	Deer mouse (water)	610000000

WATER	Desert cottontail (water)	50000000
WATER	Fish (Aquatic intermediate carnivore) - water	39
WATER	Montane shrew (water)	550000000
WATER	Occult little brown myotis bat (water)	1800000000
WATER	Red fox (water)	14000000
WATER	Violet-green Swallow (water)	500000000
SEDIMENT	Algae (Aquatic autotroph - producer) - sediment	10000
SEDIMENT	Aquatic snails (Aquatic herbivore - grazer) - sediment	10000
SEDIMENT	Daphnids (Aquatic omnivore/ herbivore) - sediment	10000
SEDIMENT	Fish (Aquatic intermediate carnivore) - sediment	10000
SEDIMENT	Occult little brown myotis bat (Mammalian aerial insectivore)	3000
SEDIMENT	Violet-green Swallow (Avian aerial insectivore)	670
SOIL	American kestrel (Avian intermediate carnivore)	10000
SOIL	American kestrel (Avian top carnivore)	10000
SOIL	American robin (Avian herbivore)	9000
SOIL	American robin (Avian insectivore)	6400
SOIL	American robin (Avian omnivore)	6400
SOIL	Deer mouse (Mammalian omnivore)	5100
SOIL	Desert cottontail (Mammalian herbivore)	5100
SOIL	Earthworm (Soil-dwelling invertebrate)	55
SOIL	Generic plant (Terrestrial autotroph - producer)	4000
SOIL	Montane shrew (Mammalian insectivore)	5100
SOIL	Red fox (Mammalian top carnivore)	4800
WATER	Algae (Aquatic autotroph - producer) - water	24
WATER	American kestrel (water)	290000000
WATER	American robin (water)	290000000
WATER	Aquatic snails (Aquatic herbivore - grazer) - water	210
WATER	Daphnids (Aquatic omnivore/ herbivore) - water	210
WATER	Deer mouse (water)	660000000
WATER	Desert cottontail (water)	54000000
WATER	Fish (Aquatic intermediate carnivore) - water	43
WATER	Montane shrew (water)	600000000
WATER	Occult little brown myotis bat (water)	2000000000
WATER	Red fox (water)	15000000
WATER	Violet-green Swallow (water)	540000000
SEDIMENT	Algae (Aquatic autotroph - producer) - sediment	
SEDIMENT	Aquatic snails (Aquatic herbivore - grazer) - sediment	
SEDIMENT	Daphnids (Aquatic omnivore/ herbivore) - sediment	
SEDIMENT	Fish (Aquatic intermediate carnivore) - sediment	
SEDIMENT	Occult little brown myotis bat (Mammalian aerial insectivore)	2900
SEDIMENT	Violet-green Swallow (Avian aerial insectivore)	660
SOIL	American kestrel (Avian intermediate carnivore)	230000
SOIL	American kestrel (Avian top carnivore)	550000

SOIL	American robin (Avian herbivore)	61000
SOIL	American robin (Avian insectivore)	16000
SOIL	American robin (Avian omnivore)	16000
SOIL	Deer mouse (Mammalian omnivore)	240000
SOIL	Desert cottontail (Mammalian herbivore)	280000
SOIL	Earthworm (Soil-dwelling invertebrate)	54
SOIL	Generic plant (Terrestrial autotroph - producer)	16000
SOIL	Montane shrew (Mammalian insectivore)	260000
SOIL	Red fox (Mammalian top carnivore)	69000
WATER	Algae (Aquatic autotroph - producer) - water	23
WATER	American kestrel (water)	290000000
WATER	American robin (water)	280000000
WATER	Aquatic snails (Aquatic herbivore - grazer) - water	210
WATER	Daphnids (Aquatic omnivore/ herbivore) - water	210
WATER	Deer mouse (water)	650000000
WATER	Desert cottontail (water)	53000000
WATER	Fish (Aquatic intermediate carnivore) - water	42
WATER	Montane shrew (water)	590000000
WATER	Occult little brown myotis bat (water)	1900000000
WATER	Red fox (water)	15000000
WATER	Violet-green Swallow (water)	530000000
SEDIMENT	Algae (Aquatic autotroph - producer) - sediment	4300
SEDIMENT	Aquatic snails (Aquatic herbivore - grazer) - sediment	4300
SEDIMENT	Daphnids (Aquatic omnivore/ herbivore) - sediment	4300
SEDIMENT	Fish (Aquatic intermediate carnivore) - sediment	4300
SEDIMENT	Occult little brown myotis bat (Mammalian aerial insectivore)	3000
SEDIMENT	Violet-green Swallow (Avian aerial insectivore)	690
SOIL	American kestrel (Avian intermediate carnivore)	4100
SOIL	American kestrel (Avian top carnivore)	4200
SOIL	American robin (Avian herbivore)	3900
SOIL	American robin (Avian insectivore)	3400
SOIL	American robin (Avian omnivore)	3400
SOIL	Deer mouse (Mammalian omnivore)	2100
SOIL	Desert cottontail (Mammalian herbivore)	2100
SOIL	Earthworm (Soil-dwelling invertebrate)	55
SOIL	Generic plant (Terrestrial autotroph - producer)	1800
SOIL	Montane shrew (Mammalian insectivore)	2100
SOIL	Red fox (Mammalian top carnivore)	2000
WATER	Algae (Aquatic autotroph - producer) - water	24
WATER	American kestrel (water)	300000000
WATER	American robin (water)	290000000
WATER	Aquatic snails (Aquatic herbivore - grazer) - water	220
WATER	Daphnids (Aquatic omnivore/ herbivore) - water	220
WATER	Deer mouse (water)	680000000
WATER	Desert cottontail (water)	55000000
WATER	Fish (Aquatic intermediate carnivore) - water	44
WATER	Montane shrew (water)	610000000

WATER	Occult little brown myotis bat (water)	2000000000
WATER	Red fox (water)	15000000
WATER	Violet-green Swallow (water)	550000000
SEDIMENT	Aquatic community organisms - sediment	
SEDIMENT	Occult little brown myotis bat (Mammalian aerial insectivore)	1.3
SOIL	Deer mouse (Mammalian omnivore)	1.3
SOIL	Desert cottontail (Mammalian herbivore)	4.2
SOIL	Montane shrew (Mammalian insectivore)	1
SOIL	Red fox (Mammalian top carnivore)	350
WATER	Aquatic community organisms - water	42
WATER	Deer mouse (water)	21000
WATER	Desert cottontail (water)	41000
WATER	Montane shrew (water)	17000
WATER	Occult little brown myotis bat (water)	25000
WATER	Red fox (water)	46000
SEDIMENT	Occult little brown myotis bat (Mammalian aerial insectivore)	0.74
SEDIMENT	Violet-green Swallow (Avian aerial insectivore)	0.026
SOIL	American kestrel (Avian intermediate carnivore)	0.045
SOIL	American kestrel (Avian top carnivore)	0.033
SOIL	American robin (Avian herbivore)	20
SOIL	American robin (Avian insectivore)	0.02
SOIL	American robin (Avian omnivore)	0.04
SOIL	Deer mouse (Mammalian omnivore)	1.1
SOIL	Desert cottontail (Mammalian herbivore)	2700
SOIL	Montane shrew (Mammalian insectivore)	0.59
SOIL	Red fox (Mammalian top carnivore)	1.2
WATER	American kestrel (water)	9100
WATER	American robin (water)	7800
WATER	Aquatic community organisms - water	32
WATER	Deer mouse (water)	96000
WATER	Desert cottontail (water)	180000
WATER	Montane shrew (water)	82000
WATER	Occult little brown myotis bat (water)	110000
WATER	Red fox (water)	210000
WATER	Violet-green Swallow (water)	4500
SEDIMENT	Aquatic community organisms - sediment	0.1
SEDIMENT	Occult little brown myotis bat (Mammalian aerial insectivore)	110
SOIL	Deer mouse (Mammalian omnivore)	160
SOIL	Desert cottontail (Mammalian herbivore)	2300
SOIL	Montane shrew (Mammalian insectivore)	90
SOIL	Red fox (Mammalian top carnivore)	1900
WATER	Aquatic community organisms - water	19
WATER	Deer mouse (water)	830000
WATER	Desert cottontail (water)	1600000
WATER	Montane shrew (water)	710000
WATER	Occult little brown myotis bat (water)	1000000
WATER	Red fox (water)	1800000

SEDIMENT	Occult little brown myotis bat (Mammalian aerial insectivore)	140
SOIL	Deer mouse (Mammalian omnivore)	80
SOIL	Desert cottontail (Mammalian herbivore)	130
SOIL	Montane shrew (Mammalian insectivore)	100
SOIL	Red fox (Mammalian top carnivore)	5700
SEDIMENT	Aquatic community organisms - sediment	0.03
SEDIMENT	Occult little brown myotis bat (Mammalian aerial insectivore)	54
SOIL	Deer mouse (Mammalian omnivore)	54
SOIL	Desert cottontail (Mammalian herbivore)	150
SOIL	Earthworm (Soil-dwelling invertebrate)	2.4
SOIL	Montane shrew (Mammalian insectivore)	43
SOIL	Red fox (Mammalian top carnivore)	5500
WATER	Aquatic community organisms - water	130
WATER	Deer mouse (water)	310000
WATER	Desert cottontail (water)	610000
WATER	Montane shrew (water)	260000
WATER	Occult little brown myotis bat (water)	370000
WATER	Red fox (water)	690000
SEDIMENT	Aquatic community organisms - sediment	0.055
SEDIMENT	Occult little brown myotis bat (Mammalian aerial insectivore)	3
SEDIMENT	Violet-green Swallow (Avian aerial insectivore)	4
SOIL	American kestrel (Avian intermediate carnivore)	20
SOIL	American kestrel (Avian top carnivore)	160
SOIL	American robin (Avian herbivore)	0.39
SOIL	American robin (Avian insectivore)	2.8
SOIL	American robin (Avian omnivore)	0.69
SOIL	Deer mouse (Mammalian omnivore)	0.54
SOIL	Desert cottontail (Mammalian herbivore)	0.68
SOIL	Montane shrew (Mammalian insectivore)	2.2
SOIL	Red fox (Mammalian top carnivore)	140
WATER	American kestrel (water)	9400
WATER	American robin (water)	8000
WATER	Aquatic community organisms - water	490
WATER	Deer mouse (water)	2600
WATER	Desert cottontail (water)	5100
WATER	Montane shrew (water)	2200
WATER	Occult little brown myotis bat (water)	3100
WATER	Red fox (water)	5800
WATER	Violet-green Swallow (water)	4600
SEDIMENT	Aquatic community organisms - sediment	0.51
SOIL	Generic plant (Terrestrial autotroph - producer)	6.1
WATER	Aquatic community organisms - water	3.7
SEDIMENT	Occult little brown myotis bat (Mammalian aerial insectivore)	4500
SOIL	Deer mouse (Mammalian omnivore)	3600
SOIL	Desert cottontail (Mammalian herbivore)	8000
SOIL	Generic plant (Terrestrial autotroph - producer)	100
SOIL	Montane shrew (Mammalian insectivore)	3600

SOIL	Red fox (Mammalian top carnivore)	650000
SEDIMENT	Occult little brown myotis bat (Mammalian aerial insectivore)	100
SOIL	Deer mouse (Mammalian omnivore)	38
SOIL	Desert cottontail (Mammalian herbivore)	55
SOIL	Earthworm (Soil-dwelling invertebrate)	10
SOIL	Montane shrew (Mammalian insectivore)	79
SOIL	Red fox (Mammalian top carnivore)	19000
WATER	Aquatic community organisms - water	3
WATER	Deer mouse (water)	350000
WATER	Desert cottontail (water)	700000
WATER	Montane shrew (water)	300000
WATER	Occult little brown myotis bat (water)	420000
WATER	Red fox (water)	790000
SEDIMENT	Aquatic community organisms - sediment	0.011
SEDIMENT	Occult little brown myotis bat (Mammalian aerial insectivore)	230
SEDIMENT	Violet-green Swallow (Avian aerial insectivore)	0.014
SOIL	American kestrel (Avian intermediate carnivore)	0.068
SOIL	American kestrel (Avian top carnivore)	0.24
SOIL	American robin (Avian herbivore)	0.39
SOIL	American robin (Avian insectivore)	0.011
SOIL	American robin (Avian omnivore)	0.021
SOIL	Deer mouse (Mammalian omnivore)	370
SOIL	Desert cottontail (Mammalian herbivore)	16000
SOIL	Generic plant (Terrestrial autotroph - producer)	160
SOIL	Montane shrew (Mammalian insectivore)	180
SOIL	Red fox (Mammalian top carnivore)	5000
WATER	American kestrel (water)	1100
WATER	American robin (water)	1000
WATER	Aquatic community organisms - water	19
WATER	Deer mouse (water)	3100000
WATER	Desert cottontail (water)	6100000
WATER	Montane shrew (water)	2600000
WATER	Occult little brown myotis bat (water)	3700000
WATER	Red fox (water)	6900000
WATER	Violet-green Swallow (water)	570
SEDIMENT	Occult little brown myotis bat (Mammalian aerial insectivore)	1.1
SOIL	Deer mouse (Mammalian omnivore)	1.8
SOIL	Desert cottontail (Mammalian herbivore)	13000
SOIL	Montane shrew (Mammalian insectivore)	0.91
SOIL	Red fox (Mammalian top carnivore)	13
WATER	Aquatic community organisms - water	3
WATER	Deer mouse (water)	340000
WATER	Desert cottontail (water)	670000
WATER	Montane shrew (water)	290000
WATER	Occult little brown myotis bat (water)	400000
WATER	Red fox (water)	750000
SEDIMENT	Occult little brown myotis bat (Mammalian aerial insectivore)	1900

SOIL	Deer mouse (Mammalian omnivore)	590
SOIL	Desert cottontail (Mammalian herbivore)	800
SOIL	Generic plant (Terrestrial autotroph - producer)	0.67
SOIL	Montane shrew (Mammalian insectivore)	1300
SOIL	Red fox (Mammalian top carnivore)	170000
SOIL	Generic plant (Terrestrial autotroph - producer)	0.69
SEDIMENT	Occult little brown myotis bat (Mammalian aerial insectivore)	8.1
SOIL	Deer mouse (Mammalian omnivore)	5.4
SOIL	Desert cottontail (Mammalian herbivore)	10
SOIL	Montane shrew (Mammalian insectivore)	6.3
SOIL	Red fox (Mammalian top carnivore)	2300
SEDIMENT	Occult little brown myotis bat (Mammalian aerial insectivore)	27
SOIL	Deer mouse (Mammalian omnivore)	4.9
SOIL	Desert cottontail (Mammalian herbivore)	6.1
SOIL	Earthworm (Soil-dwelling invertebrate)	2.2
SOIL	Montane shrew (Mammalian insectivore)	20
SOIL	Red fox (Mammalian top carnivore)	1700
WATER	Aquatic community organisms - water	550
WATER	Deer mouse (water)	31000
WATER	Desert cottontail (water)	60000
WATER	Montane shrew (water)	26000
WATER	Occult little brown myotis bat (water)	37000
WATER	Red fox (water)	68000
SEDIMENT	Aquatic community organisms - sediment	3.6
SEDIMENT	Occult little brown myotis bat (Mammalian aerial insectivore)	14
SEDIMENT	Violet-green Swallow (Avian aerial insectivore)	0.92
SOIL	American kestrel (Avian intermediate carnivore)	4.2
SOIL	American kestrel (Avian top carnivore)	14
SOIL	American robin (Avian herbivore)	22
SOIL	American robin (Avian insectivore)	0.7
SOIL	American robin (Avian omnivore)	1.3
SOIL	Deer mouse (Mammalian omnivore)	22
SOIL	Desert cottontail (Mammalian herbivore)	880
SOIL	Montane shrew (Mammalian insectivore)	11
SOIL	Red fox (Mammalian top carnivore)	290
WATER	American kestrel (water)	58000
WATER	American robin (water)	50000
WATER	Aquatic community organisms - water	10
WATER	Deer mouse (water)	340000
WATER	Desert cottontail (water)	670000
WATER	Montane shrew (water)	290000
WATER	Occult little brown myotis bat (water)	400000
WATER	Red fox (water)	750000
WATER	Violet-green Swallow (water)	29000
SEDIMENT	Aquatic community organisms - sediment	0.01
SEDIMENT	Occult little brown myotis bat (Mammalian aerial insectivore)	1
SEDIMENT	Violet-green Swallow (Avian aerial insectivore)	0.48

SOIL	American kestrel (Avian intermediate carnivore)	2
SOIL	American kestrel (Avian top carnivore)	5
SOIL	American robin (Avian herbivore)	31
SOIL	American robin (Avian insectivore)	0.36
SOIL	American robin (Avian omnivore)	0.72
SOIL	Deer mouse (Mammalian omnivore)	1.6
SOIL	Desert cottontail (Mammalian herbivore)	170
SOIL	Earthworm (Soil-dwelling invertebrate)	31
SOIL	Generic plant (Terrestrial autotroph - producer)	5
SOIL	Montane shrew (Mammalian insectivore)	0.81
SOIL	Red fox (Mammalian top carnivore)	13
WATER	American kestrel (water)	27000
WATER	American robin (water)	23000
WATER	Aquatic community organisms - water	15
WATER	Deer mouse (water)	1200
WATER	Desert cottontail (water)	2400
WATER	Montane shrew (water)	1000
WATER	Occult little brown myotis bat (water)	1500
WATER	Red fox (water)	2700
WATER	Violet-green Swallow (water)	13000
SEDIMENT	Occult little brown myotis bat (Mammalian aerial insectivore)	840
SOIL	Deer mouse (Mammalian omnivore)	38
SOIL	Desert cottontail (Mammalian herbivore)	43
SOIL	Earthworm (Soil-dwelling invertebrate)	1.8
SOIL	Generic plant (Terrestrial autotroph - producer)	0.79
SOIL	Montane shrew (Mammalian insectivore)	550
SOIL	Red fox (Mammalian top carnivore)	17000
WATER	Aquatic community organisms - water	320
WATER	Deer mouse (water)	310000
WATER	Desert cottontail (water)	610000
WATER	Montane shrew (water)	260000
WATER	Occult little brown myotis bat (water)	370000
WATER	Red fox (water)	690000
AIR	Botta's Pocket Gopher (Burrowing mammal)	530
SEDIMENT	Aquatic community organisms - sediment	0.065
SEDIMENT	Occult little brown myotis bat (Mammalian aerial insectivore)	19
SEDIMENT	Violet-green Swallow (Avian aerial insectivore)	230
SOIL	American kestrel (Avian intermediate carnivore)	1200
SOIL	American kestrel (Avian top carnivore)	30000
SOIL	American robin (Avian herbivore)	7.5
SOIL	American robin (Avian insectivore)	170
SOIL	American robin (Avian omnivore)	14
SOIL	Deer mouse (Mammalian omnivore)	1.2
SOIL	Desert cottontail (Mammalian herbivore)	1.4
SOIL	Montane shrew (Mammalian insectivore)	15
SOIL	Red fox (Mammalian top carnivore)	2900
WATER	American kestrel (water)	1600000

WATER	American robin (water)	1400000
WATER	Aquatic community organisms - water	1500
WATER	Deer mouse (water)	52000
WATER	Desert cottontail (water)	100000
WATER	Montane shrew (water)	44000
WATER	Occult little brown myotis bat (water)	62000
WATER	Red fox (water)	110000
WATER	Violet-green Swallow (water)	830000
AIR	Botta's Pocket Gopher (Burrowing mammal)	25
SEDIMENT	Aquatic community organisms - sediment	0.01
SEDIMENT	Occult little brown myotis bat (Mammalian aerial insectivore)	61
SOIL	Deer mouse (Mammalian omnivore)	24
SOIL	Desert cottontail (Mammalian herbivore)	35
SOIL	Montane shrew (Mammalian insectivore)	47
SOIL	Red fox (Mammalian top carnivore)	7600
WATER	Aquatic community organisms - water	46
WATER	Deer mouse (water)	130000
WATER	Desert cottontail (water)	270000
WATER	Montane shrew (water)	110000
WATER	Occult little brown myotis bat (water)	160000
WATER	Red fox (water)	300000
SEDIMENT	Occult little brown myotis bat (Mammalian aerial insectivore)	330
SOIL	Deer mouse (Mammalian omnivore)	120
SOIL	Desert cottontail (Mammalian herbivore)	170
SOIL	Montane shrew (Mammalian insectivore)	260
SOIL	Red fox (Mammalian top carnivore)	110000
SEDIMENT	Occult little brown myotis bat (Mammalian aerial insectivore)	3300
SOIL	Deer mouse (Mammalian omnivore)	360
SOIL	Desert cottontail (Mammalian herbivore)	420
SOIL	Montane shrew (Mammalian insectivore)	2600
SOIL	Red fox (Mammalian top carnivore)	420000
WATER	Aquatic community organisms - water	7200
WATER	Deer mouse (water)	9300000
WATER	Desert cottontail (water)	18000000
WATER	Montane shrew (water)	7900000
WATER	Occult little brown myotis bat (water)	11000000
WATER	Red fox (water)	20000000
SEDIMENT	Occult little brown myotis bat (Mammalian aerial insectivore)	1.5
SOIL	Deer mouse (Mammalian omnivore)	0.82
SOIL	Desert cottontail (Mammalian herbivore)	1.3
SOIL	Montane shrew (Mammalian insectivore)	1.1
SOIL	Red fox (Mammalian top carnivore)	190
AIR	Botta's Pocket Gopher (Burrowing mammal)	5.7
SOIL	Earthworm (Soil-dwelling invertebrate)	1.8
SOIL	Generic plant (Terrestrial autotroph - producer)	1
AIR	Botta's Pocket Gopher (Burrowing mammal)	20
SEDIMENT	Occult little brown myotis bat (Mammalian aerial insectivore)	10

SOIL	Deer mouse (Mammalian omnivore)	8
SOIL	Desert cottontail (Mammalian herbivore)	17
SOIL	Montane shrew (Mammalian insectivore)	8.2
SOIL	Red fox (Mammalian top carnivore)	2300
WATER	Aquatic community organisms - water	1.8
WATER	Deer mouse (water)	78000
WATER	Desert cottontail (water)	150000
WATER	Montane shrew (water)	67000
WATER	Occult little brown myotis bat (water)	94000
WATER	Red fox (water)	170000
AIR	Botta's Pocket Gopher (Burrowing mammal)	21
SEDIMENT	Occult little brown myotis bat (Mammalian aerial insectivore)	1.1
SOIL	Deer mouse (Mammalian omnivore)	1.5
SOIL	Desert cottontail (Mammalian herbivore)	11
SOIL	Montane shrew (Mammalian insectivore)	0.92
SOIL	Red fox (Mammalian top carnivore)	73
SEDIMENT	Occult little brown myotis bat (Mammalian aerial insectivore)	0.92
SOIL	Deer mouse (Mammalian omnivore)	1.3
SOIL	Desert cottontail (Mammalian herbivore)	12
SOIL	Montane shrew (Mammalian insectivore)	0.73
SOIL	Red fox (Mammalian top carnivore)	54
SEDIMENT	Aquatic community organisms - sediment	0.03
SEDIMENT	Occult little brown myotis bat (Mammalian aerial insectivore)	1.1
SOIL	Deer mouse (Mammalian omnivore)	1.5
SOIL	Desert cottontail (Mammalian herbivore)	11
SOIL	Earthworm (Soil-dwelling invertebrate)	1.2
SOIL	Montane shrew (Mammalian insectivore)	0.88
SOIL	Red fox (Mammalian top carnivore)	72
WATER	Aquatic community organisms - water	15
WATER	Deer mouse (water)	13000
WATER	Desert cottontail (water)	25000
WATER	Montane shrew (water)	11000
WATER	Occult little brown myotis bat (water)	15000
WATER	Red fox (water)	29000
AIR	Botta's Pocket Gopher (Burrowing mammal)	2600
AIR	Botta's Pocket Gopher (Burrowing mammal)	5600
SEDIMENT	Aquatic community organisms - sediment	0.02
SEDIMENT	Occult little brown myotis bat (Mammalian aerial insectivore)	370
SOIL	Deer mouse (Mammalian omnivore)	210
SOIL	Desert cottontail (Mammalian herbivore)	370
SOIL	Montane shrew (Mammalian insectivore)	290
SOIL	Red fox (Mammalian top carnivore)	85000
WATER	Aquatic community organisms - water	47
WATER	Deer mouse (water)	2000000
WATER	Desert cottontail (water)	3900000
WATER	Montane shrew (water)	1700000
WATER	Occult little brown myotis bat (water)	2400000

WATER	Red fox (water)	4400000
AIR	Botta's Pocket Gopher (Burrowing mammal)	41
SEDIMENT	Occult little brown myotis bat (Mammalian aerial insectivore)	110
SEDIMENT	Violet-green Swallow (Avian aerial insectivore)	6.3
SOIL	American kestrel (Avian intermediate carnivore)	33
SOIL	American kestrel (Avian top carnivore)	670
SOIL	American robin (Avian herbivore)	0.85
SOIL	American robin (Avian insectivore)	4.6
SOIL	American robin (Avian omnivore)	1.4
SOIL	Deer mouse (Mammalian omnivore)	27
SOIL	Desert cottontail (Mammalian herbivore)	36
SOIL	Montane shrew (Mammalian insectivore)	89
SOIL	Red fox (Mammalian top carnivore)	14000
WATER	American kestrel (water)	38000
WATER	American robin (water)	32000
WATER	Aquatic community organisms - water	100
WATER	Deer mouse (water)	260000
WATER	Desert cottontail (water)	510000
WATER	Montane shrew (water)	220000
WATER	Occult little brown myotis bat (water)	310000
WATER	Red fox (water)	570000
WATER	Violet-green Swallow (water)	19000
AIR	Botta's Pocket Gopher (Burrowing mammal)	5.7
SEDIMENT	Aquatic community organisms - sediment	0.1
SEDIMENT	Occult little brown myotis bat (Mammalian aerial insectivore)	14
SOIL	Deer mouse (Mammalian omnivore)	14
SOIL	Desert cottontail (Mammalian herbivore)	40
SOIL	Montane shrew (Mammalian insectivore)	11
SOIL	Red fox (Mammalian top carnivore)	2900
WATER	Aquatic community organisms - water	25
WATER	Deer mouse (water)	150000
WATER	Desert cottontail (water)	300000
WATER	Montane shrew (water)	130000
WATER	Occult little brown myotis bat (water)	180000
WATER	Red fox (water)	340000
SEDIMENT	Aquatic community organisms - sediment	0.2
SEDIMENT	Occult little brown myotis bat (Mammalian aerial insectivore)	29
SOIL	Deer mouse (Mammalian omnivore)	25
SOIL	Desert cottontail (Mammalian herbivore)	58
SOIL	Montane shrew (Mammalian insectivore)	23
SOIL	Red fox (Mammalian top carnivore)	7100
WATER	Aquatic community organisms - water	590
WATER	Deer mouse (water)	230000
WATER	Desert cottontail (water)	460000
WATER	Montane shrew (water)	200000
WATER	Occult little brown myotis bat (water)	280000
WATER	Red fox (water)	520000

SEDIMENT	Violet-green Swallow (Avian aerial insectivore)	13
SOIL	American kestrel (Avian intermediate carnivore)	73
SOIL	American kestrel (Avian top carnivore)	6700
SOIL	American robin (Avian herbivore)	84
SOIL	American robin (Avian insectivore)	10
SOIL	American robin (Avian omnivore)	18
SEDIMENT	Occult little brown myotis bat (Mammalian aerial insectivore)	0.24
SEDIMENT	Violet-green Swallow (Avian aerial insectivore)	0.1
SOIL	American kestrel (Avian intermediate carnivore)	0.56
SOIL	American kestrel (Avian top carnivore)	82
SOIL	American robin (Avian herbivore)	100
SOIL	American robin (Avian insectivore)	0.079
SOIL	American robin (Avian omnivore)	0.15
SOIL	Deer mouse (Mammalian omnivore)	0.4
SOIL	Desert cottontail (Mammalian herbivore)	1400
SOIL	Earthworm (Soil-dwelling invertebrate)	10
SOIL	Generic plant (Terrestrial autotroph - producer)	10
SOIL	Montane shrew (Mammalian insectivore)	0.2
SOIL	Red fox (Mammalian top carnivore)	250
SEDIMENT	Occult little brown myotis bat (Mammalian aerial insectivore)	6.7
SEDIMENT	Violet-green Swallow (Avian aerial insectivore)	0.48
SOIL	American kestrel (Avian intermediate carnivore)	2.6
SOIL	American kestrel (Avian top carnivore)	500
SOIL	American robin (Avian herbivore)	0.47
SOIL	American robin (Avian insectivore)	0.36
SOIL	American robin (Avian omnivore)	0.41
SOIL	Deer mouse (Mammalian omnivore)	6.1
SOIL	Desert cottontail (Mammalian herbivore)	15
SOIL	Montane shrew (Mammalian insectivore)	5.4
SOIL	Red fox (Mammalian top carnivore)	6500
SEDIMENT	Violet-green Swallow (Avian aerial insectivore)	0.082
SOIL	American kestrel (Avian intermediate carnivore)	0.44
SOIL	American kestrel (Avian top carnivore)	20
SOIL	American robin (Avian herbivore)	0.038
SOIL	American robin (Avian insectivore)	0.062
SOIL	American robin (Avian omnivore)	0.047
SEDIMENT	Occult little brown myotis bat (Mammalian aerial insectivore)	19
SOIL	Deer mouse (Mammalian omnivore)	9.8
SOIL	Desert cottontail (Mammalian herbivore)	15
SOIL	Montane shrew (Mammalian insectivore)	15
SOIL	Red fox (Mammalian top carnivore)	6600
AIR	Botta's Pocket Gopher (Burrowing mammal)	1300
SEDIMENT	Aquatic community organisms - sediment	0.018
SEDIMENT	Occult little brown myotis bat (Mammalian aerial insectivore)	11
SOIL	Deer mouse (Mammalian omnivore)	2.6
SOIL	Desert cottontail (Mammalian herbivore)	3.4
SOIL	Generic plant (Terrestrial autotroph - producer)	1600

SOIL	Montane shrew (Mammalian insectivore)	9
SOIL	Red fox (Mammalian top carnivore)	1700
WATER	Aquatic community organisms - water	210
WATER	Deer mouse (water)	30000
WATER	Desert cottontail (water)	60000
WATER	Montane shrew (water)	26000
WATER	Occult little brown myotis bat (water)	36000
WATER	Red fox (water)	68000
SOIL	Earthworm (Soil-dwelling invertebrate)	1.2
SOIL	Generic plant (Terrestrial autotroph - producer)	3.2
AIR	Botta's Pocket Gopher (Burrowing mammal)	73
SEDIMENT	Aquatic community organisms - sediment	0.002
SEDIMENT	Occult little brown myotis bat (Mammalian aerial insectivore)	0.23
SOIL	Deer mouse (Mammalian omnivore)	0.36
SOIL	Desert cottontail (Mammalian herbivore)	8.8
SOIL	Generic plant (Terrestrial autotroph - producer)	10
SOIL	Montane shrew (Mammalian insectivore)	0.18
SOIL	Red fox (Mammalian top carnivore)	31
WATER	Aquatic community organisms - water	98
WATER	Deer mouse (water)	10000
WATER	Desert cottontail (water)	20000
WATER	Montane shrew (water)	8900
WATER	Occult little brown myotis bat (water)	12000
WATER	Red fox (water)	23000
AIR	Botta's Pocket Gopher (Burrowing mammal)	60
SEDIMENT	Aquatic community organisms - sediment	0.01
SEDIMENT	Occult little brown myotis bat (Mammalian aerial insectivore)	29
SOIL	Deer mouse (Mammalian omnivore)	25
SOIL	Desert cottontail (Mammalian herbivore)	61
SOIL	Generic plant (Terrestrial autotroph - producer)	200
SOIL	Montane shrew (Mammalian insectivore)	23
SOIL	Red fox (Mammalian top carnivore)	3100
WATER	Aquatic community organisms - water	9.8
WATER	Deer mouse (water)	130000
WATER	Desert cottontail (water)	260000
WATER	Montane shrew (water)	110000
WATER	Occult little brown myotis bat (water)	160000
WATER	Red fox (water)	300000
SEDIMENT	Aquatic community organisms - sediment	0.011
SEDIMENT	Occult little brown myotis bat (Mammalian aerial insectivore)	0.33
SOIL	Deer mouse (Mammalian omnivore)	0.51
SOIL	Desert cottontail (Mammalian herbivore)	11
SOIL	Earthworm (Soil-dwelling invertebrate)	1.2
SOIL	Montane shrew (Mammalian insectivore)	0.27
SOIL	Red fox (Mammalian top carnivore)	12
WATER	Aquatic community organisms - water	24
WATER	Deer mouse (water)	7700

WATER	Desert cottontail (water)	15000
WATER	Montane shrew (water)	6600
WATER	Occult little brown myotis bat (water)	9300
WATER	Red fox (water)	17000
AIR	Botta's Pocket Gopher (Burrowing mammal)	240
SEDIMENT	Aquatic community organisms - sediment	0.07
SEDIMENT	Occult little brown myotis bat (Mammalian aerial insectivore)	320
SOIL	Deer mouse (Mammalian omnivore)	400
SOIL	Desert cottontail (Mammalian herbivore)	1800
SOIL	Montane shrew (Mammalian insectivore)	260
SOIL	Red fox (Mammalian top carnivore)	50000
WATER	Aquatic community organisms - water	11
WATER	Deer mouse (water)	5200000
WATER	Desert cottontail (water)	10000000
WATER	Montane shrew (water)	4400000
WATER	Occult little brown myotis bat (water)	6200000
WATER	Red fox (water)	11000000
AIR	Botta's Pocket Gopher (Burrowing mammal)	19
SEDIMENT	Aquatic community organisms - sediment	0.078
SEDIMENT	Occult little brown myotis bat (Mammalian aerial insectivore)	52
SOIL	Deer mouse (Mammalian omnivore)	55
SOIL	Desert cottontail (Mammalian herbivore)	170
SOIL	Montane shrew (Mammalian insectivore)	42
SOIL	Red fox (Mammalian top carnivore)	6400
WATER	Aquatic community organisms - water	21
WATER	Deer mouse (water)	520000
WATER	Desert cottontail (water)	1000000
WATER	Montane shrew (water)	440000
WATER	Occult little brown myotis bat (water)	620000
WATER	Red fox (water)	1100000
AIR	Botta's Pocket Gopher (Burrowing mammal)	820
SEDIMENT	Occult little brown myotis bat (Mammalian aerial insectivore)	65
SOIL	Deer mouse (Mammalian omnivore)	98
SOIL	Desert cottontail (Mammalian herbivore)	1700
SOIL	Montane shrew (Mammalian insectivore)	52
SOIL	Red fox (Mammalian top carnivore)	160000
SEDIMENT	Occult little brown myotis bat (Mammalian aerial insectivore)	0.15
SOIL	Deer mouse (Mammalian omnivore)	0.13
SOIL	Desert cottontail (Mammalian herbivore)	0.31
SOIL	Montane shrew (Mammalian insectivore)	0.12
SOIL	Red fox (Mammalian top carnivore)	130
AIR	Botta's Pocket Gopher (Burrowing mammal)	87
SEDIMENT	Aquatic community organisms - sediment	0.13
SEDIMENT	Occult little brown myotis bat (Mammalian aerial insectivore)	1.8
SEDIMENT	Violet-green Swallow (Avian aerial insectivore)	54
SOIL	American kestrel (Avian intermediate carnivore)	280
SOIL	American kestrel (Avian top carnivore)	3200

SOIL	American robin (Avian herbivore)	90
SOIL	American robin (Avian insectivore)	41
SOIL	American robin (Avian omnivore)	56
SOIL	Deer mouse (Mammalian omnivore)	2
SOIL	Desert cottontail (Mammalian herbivore)	7
SOIL	Generic plant (Terrestrial autotroph - producer)	100
SOIL	Montane shrew (Mammalian insectivore)	1.4
SOIL	Red fox (Mammalian top carnivore)	130
WATER	American kestrel (water)	880000
WATER	American robin (water)	760000
WATER	Aquatic community organisms - water	13
WATER	Deer mouse (water)	11000
WATER	Desert cottontail (water)	21000
WATER	Montane shrew (water)	9400
WATER	Occult little brown myotis bat (water)	13000
WATER	Red fox (water)	24000
WATER	Violet-green Swallow (water)	440000

Low Effect ESL	Units	Minimum ESL	Note
0.0000085	mg/kg		
0.0000024	mg/kg	Minimum	
0.0000039	mg/kg		
0.00032	mg/kg		
10	mg/kg		
0.0000019	mg/kg	Minimum	
0.0000085	mg/kg		
0.00002	µg/L	Minimum	
0.052	µg/L		
0.1	µg/L		
0.044	µg/L		
0.062	µg/L		
0.11	µg/L		
95	mg/kg	Minimum	
36	mg/kg	Minimum	
52	mg/kg		
800	mg/kg		
76	mg/kg		
16000	mg/kg		
500000	µg/L		
980000	µg/L		
430000	µg/L	Minimum	
600000	µg/L		
1100000	µg/L		
340	mg/kg	Minimum	
100	mg/kg	Minimum	
140	mg/kg		
800	mg/kg		
270	mg/kg		
37000	mg/kg		
730000	µg/L		
1400000	µg/L		
620000	µg/L	Minimum	
870000	µg/L		
1600000	µg/L		
2.9	mg/kg	Minimum	
27	mg/kg		
120	mg/kg		
620	mg/kg		
0.79	mg/kg		
17	mg/kg		
1.5	mg/kg		
0.17	mg/kg	Minimum	
0.19	mg/kg		

1.9	mg/kg		
77	mg/kg		
35000	µg/L		
30000	µg/L		
160	µg/L	Minimum	
1300	µg/L		
2700	µg/L		
1100	µg/L		
1600	µg/L		
3000	µg/L		
17000	µg/L		
2.9	mg/kg	Minimum	
180	mg/kg		
25	mg/kg	Minimum	
31	mg/kg		
130	mg/kg		
7600	mg/kg		
330	µg/L	Minimum	
140000	µg/L		
270000	µg/L		
120000	µg/L		
160000	µg/L		
310000	µg/L		
97	mg/kg	Minimum	
18	mg/kg	Minimum	
23	mg/kg		
71	mg/kg		
5800	mg/kg		
330	µg/L	Minimum	
93000	µg/L		
180000	µg/L		
79000	µg/L		
110000	µg/L		
200000	µg/L		
73000	mg/kg	Minimum	
72	mg/kg	Minimum	
79	mg/kg		
290	mg/kg		
3500	mg/kg		
8300	mg/kg		
79000	mg/kg		
1000000	µg/L		
2000000	µg/L		
890000	µg/L	Minimum	
1200000	µg/L		
2300000	µg/L		
18000	mg/kg	Minimum	

750	mg/kg	Minimum	
850	mg/kg		
11000	mg/kg		
290000	mg/kg		
5300000	µg/L		
10000000	µg/L		
4500000	µg/L	Minimum	
6400000	µg/L		
11000000	µg/L		
280	mg/kg	Minimum	
99	mg/kg	Minimum	
140	mg/kg		
210	mg/kg		
25000	mg/kg		
460000	µg/L		
910000	µg/L		
390000	µg/L	Minimum	
560000	µg/L		
1000000	µg/L		
240	mg/kg	Minimum	
120	mg/kg	Minimum	
190	mg/kg		
190	mg/kg		
27000	mg/kg		
560000	µg/L		
1100000	µg/L		
470000	µg/L	Minimum	
670000	µg/L		
1200000	µg/L		
520	mg/kg	Minimum	
220	mg/kg	Minimum	
320	mg/kg		
400	mg/kg		
56000	mg/kg		
1000000	µg/L		
2000000	µg/L		
870000	µg/L	Minimum	
1200000	µg/L		
2200000	µg/L		
14000	mg/kg	Minimum	
1000	mg/kg	Minimum	
1100	mg/kg		
8700	mg/kg		
76000	mg/kg		
3600000	µg/L		
7200000	µg/L		
3100000	µg/L	Minimum	

4400000	µg/L		
8100000	µg/L		
920	mg/kg		
87	mg/kg	Minimum	
380	mg/kg		
2100	mg/kg		
24	mg/kg		
43	mg/kg		
30	mg/kg		
430	mg/kg		
690	mg/kg		
8.6	mg/kg	Minimum	
480	mg/kg		
21000	mg/kg		
520000	µg/L		
1000000	µg/L		
440000	µg/L	Minimum	
620000	µg/L		
1100000	µg/L		
490	mg/kg	Minimum	
47	mg/kg	Minimum	
52	mg/kg		
170	mg/kg		
1700	mg/kg		
32000	µg/L		
63000	µg/L		
27000	µg/L	Minimum	
38000	µg/L		
72000	µg/L		
13000	mg/kg	Minimum	
66	mg/kg	Minimum	
73	mg/kg		
4000	mg/kg		
39000	mg/kg		
700000	µg/L		
1300000	µg/L		
600000	µg/L	Minimum	
840000	µg/L		
1500000	µg/L		
11000	mg/kg		
780	mg/kg	Minimum	
2500	mg/kg		
5000	mg/kg		
11	mg/kg	Minimum	
260	mg/kg		
22	mg/kg		
370	mg/kg		

410	mg/kg		
58	mg/kg		
120	mg/kg		
4200	mg/kg		
82000	mg/kg		
140000	µg/L		
120000	µg/L		
840000	µg/L		
1600000	µg/L		
710000	µg/L		
1000000	µg/L		
1800000	µg/L		
73000	µg/L	Minimum	
58000	mg/kg		
	mg/kg	Minimum	pH dependent. Aluminum is identified as a COPC only at sites where the sediment pH is less than 5.5.
	mg/kg	Minimum	pH dependent. Aluminum is identified as a COPC only at sites where the sediment pH is less than 5.5.
		Minimum	pH dependent. Aluminum is identified as a COPC only at sites where the soil pH is less than 5.5.
		Minimum	pH dependent. Aluminum is identified as a COPC only at sites where the soil pH is less than 5.5.
		Minimum	pH dependent. Aluminum is identified as a COPC only at sites where the soil pH is less than 5.5.
		Minimum	pH dependent. Aluminum is identified as a COPC only at sites where the soil pH is less than 5.5.
		Minimum	pH dependent. Aluminum is identified as a COPC only at sites where the soil pH is less than 5.5.
		Minimum	pH dependent. Aluminum is identified as a COPC only at sites where the soil pH is less than 5.5.
		Minimum	pH dependent. Aluminum is identified as a COPC only at sites where the soil pH is less than 5.5.
		Minimum	pH dependent. Aluminum is identified as a COPC only at sites where the soil pH is less than 5.5.
		Minimum	pH dependent. Aluminum is identified as a COPC only at sites where the soil pH is less than 5.5.
		Minimum	pH dependent. Aluminum is identified as a COPC only at sites where the soil pH is less than 5.5.
9100000	µg/L		
7800000	µg/L		
1300	µg/L	Minimum	
100000	µg/L		
190000	µg/L		
86000	µg/L		
120000	µg/L		

220000	µg/L		
4500000	µg/L		
	mg/kg		
3.6	mg/kg	Minimum	
4.8	mg/kg		
29	mg/kg		
780	mg/kg		
0.5	mg/kg	Minimum	
2.6	mg/kg		
450	mg/kg		
88	µg/L	Minimum	
2700	µg/L		
5400	µg/L		
2300	µg/L		
3300	µg/L		
6100	µg/L		
33	mg/kg	Minimum	
43	mg/kg		
350	mg/kg		
1600	mg/kg		
11000	mg/kg		
420	mg/kg		
180	mg/kg		
260	mg/kg		
51	mg/kg		
250	mg/kg		
68	mg/kg	Minimum	
91	mg/kg		
24	mg/kg		
1300	mg/kg		
100000	µg/L		
91000	µg/L		
340	µg/L	Minimum	
6600	µg/L		
12000	µg/L		
5600	µg/L		
7900	µg/L		
14000	µg/L		
52000	µg/L		
300	mg/kg	Minimum	
35000	mg/kg		
5300	mg/kg		
20000	mg/kg		
65000	mg/kg		
1400	mg/kg		
1900	mg/kg		
1600	mg/kg		

18000	mg/kg		
33000	mg/kg		
3200	mg/kg		
260	mg/kg	Minimum	
13000	mg/kg		
410000	mg/kg		
1500000	µg/L		
1300000	µg/L		
39	µg/L	Minimum	
10000	µg/L		
20000	µg/L		
8800	µg/L		
12000	µg/L		
23000	µg/L		
760000	µg/L		
730	mg/kg	Minimum	
560	mg/kg		
1700	mg/kg		
400	mg/kg		
25	mg/kg	Minimum	
180	mg/kg		
4200	mg/kg		
6.6	ug/L	Minimum	
34000	µg/L		
68000	µg/L		
29000	µg/L		
41000	µg/L		
76000	µg/L		
1700	mg/kg		
54	mg/kg	Minimum	
280	mg/kg		
7000	mg/kg		
10	mg/kg	Minimum	
37	mg/kg		
15	mg/kg		
560	mg/kg		
770	mg/kg		
86	mg/kg		
1200	mg/kg		
210000	mg/kg		
1500000	µg/L		
1300000	µg/L		
16	µg/L	Minimum	
1400000	µg/L		
2800000	µg/L		
1200000	µg/L		
1700000	µg/L		

3200000	µg/L		
770000	µg/L		
4.9	mg/kg		
3.3	mg/kg	Minimum	
3.8	mg/kg		
20	mg/kg		
5800	mg/kg		
44	mg/kg		
2.9	mg/kg		
5.4	mg/kg		
5.1	mg/kg		
99	mg/kg		
760	mg/kg		
160	mg/kg		
2.7	mg/kg	Minimum	
5100	mg/kg		
160000	µg/L		
140000	µg/L		
0.91	µg/L	Minimum	
20000	µg/L		
40000	µg/L		
17000	µg/L		
24000	µg/L		
45000	µg/L		
82000	µg/L		
860	µg/L	Minimum	
110	mg/kg	Minimum	
930	mg/kg		
610	mg/kg		
2600	mg/kg		
12000	mg/kg		
680	mg/kg		
280	mg/kg	Minimum	
400	mg/kg		
1100	mg/kg		
8400	mg/kg		
450	mg/kg		
18000	mg/kg		
140000	µg/L		
120000	µg/L		
16	µg/L	Minimum	
740000	µg/L		
1400000	µg/L		
630000	µg/L		
890000	µg/L		
1600000	µg/L		
71000	µg/L		

9600	mg/kg		
6800	mg/kg	Minimum	
22000	mg/kg		
54000	mg/kg		
2800	mg/kg		
1900	mg/kg		
2200	mg/kg		
8600	mg/kg		
32000	mg/kg		
3.4	mg/kg	Minimum	
3.5	mg/kg		
2800	mg/kg		
72000	mg/kg		
140000	µg/L		
120000	µg/L		
16	µg/L	Minimum	
740000	µg/L		
1400000	µg/L		
630000	µg/L		
890000	µg/L		
1600000	µg/L		
71000	µg/L		
3700	mg/kg		
2300	mg/kg	Minimum	
9300	mg/kg		
35000	mg/kg		
1700	mg/kg		
960	mg/kg		
1200	mg/kg		
4000	mg/kg		
18000	mg/kg		
130	mg/kg	Minimum	
1600	mg/kg		
54000	mg/kg		
4100	µg/L		
3500	µg/L		
30	µg/L	Minimum	
2600	µg/L		
5100	µg/L		
2200	µg/L		
3100	µg/L		
5800	µg/L		
2000	µg/L		
140	mg/kg		
91	mg/kg		
70	mg/kg	Minimum	
350	mg/kg		

5000	mg/kg		
110	mg/kg		
46	mg/kg	Minimum	
66	mg/kg		
100	mg/kg		
460	mg/kg		
530	mg/kg		
490	mg/kg		
63	mg/kg		
6400	mg/kg		
260000	µg/L		
220000	µg/L		
7	µg/L	Minimum	
39000	µg/L		
76000	µg/L		
33000	µg/L		
46000	µg/L		
86000	µg/L		
130000	µg/L		
1	mg/kg	Minimum	
4200	mg/kg		
1.4	mg/kg		
4.7	mg/kg		
5.8	mg/kg		
1	mg/kg	Minimum	
1	mg/kg	Minimum	
1	mg/kg	Minimum	
3400	mg/kg		
7400	mg/kg		
3100	mg/kg		
22000	mg/kg		
3300	µg/L		
2800	µg/L		
22	µg/L	Minimum	
3600000	µg/L		
7000000	µg/L		
3000000	µg/L		
4300000	µg/L		
7900000	µg/L		
1600	µg/L		
300	mg/kg		
450	mg/kg	Minimum	
2100	mg/kg		
10000	mg/kg		
2100	mg/kg		
310	mg/kg	Minimum	
540	mg/kg		

440	mg/kg		
6400	mg/kg		
220	mg/kg		
8500	mg/kg		
1000000	µg/L		
870000	µg/L		
200	µg/L	Minimum	
250000	µg/L		
500000	µg/L		
210000	µg/L		
300000	µg/L		
560000	µg/L		
500000	µg/L		
40000	mg/kg	Minimum	
10000	µg/L	Minimum	
120	mg/kg		
240	mg/kg		
54	mg/kg	Minimum	
240	mg/kg		
1600	mg/kg		
42	mg/kg		
28	mg/kg	Minimum	
33	mg/kg		
230	mg/kg		
700	mg/kg		
8400	mg/kg		
570	mg/kg		
130	mg/kg		
7000	mg/kg		
1300000	µg/L		
1100000	µg/L		
10	µg/L	Minimum	
19000	µg/L		
38000	µg/L		
16000	µg/L		
23000	µg/L		
43000	µg/L		
640000	µg/L		
730	mg/kg	Minimum	
490	mg/kg		
1200	mg/kg		
180	mg/kg	Minimum	
4200	mg/kg		
1100	mg/kg	Minimum	
53000	mg/kg		
110000	mg/kg		
350000	mg/kg		

900000	mg/kg		
14000	mg/kg		
31000	mg/kg		
19000	mg/kg		
14000	mg/kg		
20000	mg/kg		
4500	mg/kg		
1100	mg/kg	Minimum	
15000	mg/kg		
410000	mg/kg		
48000000	µg/L		
41000000	µg/L		
2300	µg/L	Minimum	
830000	µg/L		
1600000	µg/L		
700000	µg/L		
990000	µg/L		
1800000	µg/L		
24000000	µg/L		
1	mg/kg		
22	mg/kg		
0.18	mg/kg	Minimum	
0.82	mg/kg		
2.8	mg/kg		
0.7	mg/kg		
0.13	mg/kg	Minimum	
0.22	mg/kg		
30	mg/kg		
220	mg/kg		
0.5	mg/kg		
64	mg/kg		
17	mg/kg		
460	mg/kg		
1500	µg/L		
1300	µg/L		
1.4	µg/L	Minimum	
74000	µg/L		
140000	µg/L		
63000	µg/L		
88000	µg/L		
160000	µg/L		
780	µg/L		
0.019	mg/kg		
0.0046	mg/kg	Minimum	
0.021	mg/kg		
0.076	mg/kg		
0.75	mg/kg		

0.0035	mg/kg	Minimum	
0.0071	mg/kg		
0.031	mg/kg		
11	mg/kg		
12	mg/kg		
0.015	mg/kg		
0.42	mg/kg		
530	µg/L		
450	µg/L		
0.028	µg/L	Minimum	
840	µg/L		
1600	µg/L		
710	µg/L		
1000	µg/L		
1800	µg/L		
260	µg/L		
270	mg/kg	Minimum	
1300	mg/kg		
17000	mg/kg		
190	mg/kg		
170	mg/kg	Minimum	
180	mg/kg		
7900	µg/L	Minimum	
48	mg/kg		
27	mg/kg	Minimum	
320	mg/kg		
1600	mg/kg		
29000	mg/kg		
1600	mg/kg		
210	mg/kg		
380	mg/kg		
41	mg/kg		
1000	mg/kg		
1300	mg/kg		
270	mg/kg		
19	mg/kg	Minimum	
2400	mg/kg		
320000	µg/L		
270000	µg/L		
260	µg/L	Minimum	
3600	µg/L		
7100	µg/L		
3000	µg/L		
4300	µg/L		
8000	µg/L		
160000	µg/L		
21000000	µg/L		

18000000	µg/L		
140000	µg/L		
290000	µg/L		
120000	µg/L	Minimum	
170000	µg/L		
330000	µg/L		
10000000	µg/L		
2.9	mg/kg	Minimum	
1.3	mg/kg		
2.1	mg/kg		
11	mg/kg		
190	mg/kg		
2	mg/kg		
1.5	mg/kg		
1.7	mg/kg		
1.2	mg/kg		
3.2	mg/kg		
41	mg/kg		
3.4	mg/kg	Minimum	
0.99	mg/kg		
120	mg/kg		
12000	µg/L		
10000	µg/L		
20	µg/L	Minimum	
1700	µg/L		
3400	µg/L		
1400	µg/L		
2000	µg/L		
3800	µg/L		
6100	µg/L		
5	mg/kg	Minimum	
180	mg/kg		
36	mg/kg		
190	mg/kg		
8400	mg/kg		
110	mg/kg		
26	mg/kg	Minimum	
43	mg/kg		
240	mg/kg		
1500	mg/kg		
2800	mg/kg		
140	mg/kg		
41000	mg/kg		
450000	µg/L		
380000	µg/L		
1	µg/L	Minimum	
1000000	µg/L		

1900000	µg/L		
850000	µg/L		
1100000	µg/L		
2200000	µg/L		
220000	µg/L		
17000	mg/kg	Minimum	
960	mg/kg	Minimum	
1100	mg/kg		
6600	mg/kg		
190000	mg/kg		
15000	µg/L	Minimum	
1300000	µg/L		
2500000	µg/L		
1100000	µg/L		
1500000	µg/L		
2900000	µg/L		
0.44	mg/kg	Minimum	
13	mg/kg		
66	mg/kg		
750	mg/kg		
92	mg/kg		
9	mg/kg		
16	mg/kg		
0.68	mg/kg		
28	mg/kg		
0.5	mg/kg		
0.32	mg/kg	Minimum	
28	mg/kg		
29000	µg/L		
25000	µg/L		
0.3	µg/L	Minimum	
370	µg/L		
730	µg/L		
310	µg/L		
440	µg/L		
820	µg/L		
14000	µg/L		
980	mg/kg	Minimum	
1500	mg/kg		
59000	mg/kg		
720	mg/kg	Minimum	
73000	mg/kg		
830000	µg/L		
1600000	µg/L		
700000	µg/L	Minimum	
990000	µg/L		
1800000	µg/L		

1000	mg/kg	Minimum	
2800	mg/kg		
88000	mg/kg		
210000	mg/kg		
390000	mg/kg		
19000	mg/kg		
16000	mg/kg		
17000	mg/kg		
1800	mg/kg		
5200	mg/kg		
250	mg/kg	Minimum	
560	mg/kg		
12000	mg/kg		
6500000	µg/L		
5500000	µg/L		
50	µg/L	Minimum	
78000	µg/L		
150000	µg/L		
67000	µg/L		
94000	µg/L		
170000	µg/L		
3200000	µg/L		
1200	mg/kg		
61	mg/kg	Minimum	
160	mg/kg		
340	mg/kg		
17	mg/kg		
13	mg/kg		
15	mg/kg		
950	mg/kg		
3100	mg/kg		
0.25	mg/kg	Minimum	
280	mg/kg		
6600	mg/kg		
91000	µg/L		
78000	µg/L		
190	µg/L	Minimum	
22000	µg/L		
43000	µg/L		
18000	µg/L		
26000	µg/L		
48000	µg/L		
45000	µg/L		
450	mg/kg		
1200	mg/kg		
650	mg/kg	Minimum	
3200	mg/kg		

24000	mg/kg		
3500	mg/kg		
480	mg/kg	Minimum	
850	mg/kg		
1700	mg/kg		
18000	mg/kg		
930	mg/kg		
810	mg/kg		
980	mg/kg		
60000	mg/kg		
10000000	µg/L		
8500000	µg/L		
85	µg/L	Minimum	
6600000	µg/L		
12000000	µg/L		
5600000	µg/L		
7900000	µg/L		
14000000	µg/L		
4900000	µg/L		
0.23	mg/kg		
0.37	mg/kg		
68	mg/kg		
0.18	mg/kg	Minimum	
0.84	mg/kg		
730	mg/kg		
1000	mg/kg		
7500	mg/kg		
580	mg/kg	Minimum	
24000	mg/kg		
0.05	mg/kg	Minimum	
1.6	mg/kg		
190	mg/kg		
960	mg/kg		
6500	mg/kg		
800	mg/kg		
140	mg/kg		
240	mg/kg		
2.3	mg/kg		
17	mg/kg		
1.3	mg/kg	Minimum	
75	mg/kg		
3100000	µg/L		
2700000	µg/L		
22	µg/L	Minimum	
10000	µg/L		
20000	µg/L		
8900	µg/L		

12000	µg/L		
23000	µg/L		
1500000	µg/L		
0.0049	mg/kg	Minimum	
0.11	mg/kg		
1.1	mg/kg		
5.7	mg/kg		
41	mg/kg		
4.7	mg/kg		
0.86	mg/kg		
1.4	mg/kg		
0.16	mg/kg		
1.2	mg/kg		
1	mg/kg		
0.094	mg/kg	Minimum	
5.6	mg/kg		
18000	µg/L		
16000	µg/L		
0.95	µg/L	Minimum	
730	µg/L		
1400	µg/L		
620	µg/L		
880	µg/L		
1600	µg/L		
9200	µg/L		
0.017	mg/kg	Minimum	
3.3	mg/kg		
1.8	mg/kg		
5.4	mg/kg		
5.9	mg/kg		
99	mg/kg		
1.4	mg/kg		
2.7	mg/kg		
5.4	mg/kg		
580	mg/kg		
22	mg/kg		
2.7	mg/kg	Minimum	
14	mg/kg		
89000	µg/L		
76000	µg/L		
0.043	µg/L	Minimum	
62000	µg/L		
120000	µg/L		
52000	µg/L		
74000	µg/L		
130000	µg/L		
44000	µg/L		

0.017	mg/kg	Minimum	
29	mg/kg		
15	mg/kg		
46	mg/kg		
50	mg/kg		
110	mg/kg		
11	mg/kg		
21	mg/kg		
44	mg/kg		
690	mg/kg		
22	mg/kg	Minimum	
22	mg/kg	Minimum	
120	mg/kg		
89000	µg/L		
76000	µg/L		
0.043	µg/L	Minimum	
62000	µg/L		
120000	µg/L		
52000	µg/L		
74000	µg/L		
130000	µg/L		
44000	µg/L		
10	mg/kg		
0.043	mg/kg		
0.14	mg/kg		
0.18	mg/kg		
0.73	mg/kg		
0.033	mg/kg	Minimum	
0.063	mg/kg		
16	mg/kg		
530	mg/kg		
8.2	mg/kg		
58	mg/kg		
0.031	mg/kg	Minimum	
11	mg/kg		
0.73	mg/kg		
1.7	mg/kg		
1.5	mg/kg		
28	mg/kg		
0.55	mg/kg	Minimum	
1	mg/kg		
18	mg/kg		
1500	mg/kg		
9.3	mg/kg		
32	mg/kg		
10000	µg/L		
9200	µg/L		

1000	µg/L	Minimum	
520000	µg/L		
1000000	µg/L		
440000	µg/L		
620000	µg/L		
1100000	µg/L		
5300	µg/L		
0.041	mg/kg	Minimum	
0.27	mg/kg		
1.4	mg/kg		
3.7	mg/kg		
3.7	mg/kg		
85	mg/kg		
1	mg/kg		
2.1	mg/kg		
0.44	mg/kg		
64	mg/kg		
6.1	mg/kg		
0.22	mg/kg	Minimum	
0.96	mg/kg		
20000	µg/L		
17000	µg/L		
0.01	µg/L	Minimum	
84000	µg/L		
160000	µg/L		
71000	µg/L		
100000	µg/L		
180000	µg/L		
9900	µg/L		
0.019	mg/kg	Minimum	
0.011	mg/kg		
0.84	mg/kg		
3.4	mg/kg		
6.6	mg/kg		
18	mg/kg		
0.64	mg/kg		
1.2	mg/kg		
0.017	mg/kg		
0.67	mg/kg		
100	mg/kg		
0.009	mg/kg	Minimum	
0.11	mg/kg		
6400	µg/L		
5500	µg/L		
0.24	µg/L	Minimum	
1000	µg/L		
2000	µg/L		

890	µg/L		
1200	µg/L		
2300	µg/L		
3100	µg/L		
0.0001	mg/kg	Minimum	
15	mg/kg		
610	mg/kg		
2800	mg/kg		
11000	mg/kg		
150	mg/kg		
400	mg/kg		
220	mg/kg		
6.4	mg/kg	Minimum	
9.7	mg/kg		
10	mg/kg		
350	mg/kg		
830000	µg/L		
710000	µg/L		
0.22	µg/L	Minimum	
7800	µg/L		
15000	µg/L		
6700	µg/L		
9400	µg/L		
17000	µg/L		
410000	µg/L		
0.022	mg/kg		
0.29	mg/kg		
0.019	mg/kg	Minimum	
0.082	mg/kg		
0.2	mg/kg		
0.49	mg/kg		
0.014	mg/kg	Minimum	
0.028	mg/kg		
0.46	mg/kg		
20	mg/kg		
0.034	mg/kg		
0.23	mg/kg		
4.1	mg/kg		
830	µg/L		
710	µg/L		
0.086	µg/L	Minimum	
4800	µg/L		
9400	µg/L		
4100	µg/L		
5700	µg/L		
10000	µg/L		
410	µg/L		

0.016	mg/kg	Minimum	
0.74	mg/kg		
4	mg/kg		
12	mg/kg		
13	mg/kg		
86	mg/kg		
3	mg/kg		
5.9	mg/kg		
1.1	mg/kg		
49	mg/kg		
4	mg/kg		
0.59	mg/kg	Minimum	
3.3	mg/kg		
76000	µg/L		
65000	µg/L		
0.038	µg/L	Minimum	
5200	µg/L		
10000	µg/L		
4400	µg/L		
6200	µg/L		
11000	µg/L		
38000	µg/L		
0.13	mg/kg	Minimum	
3.4	mg/kg		
14	mg/kg		
29	mg/kg		
99	mg/kg		
2.6	mg/kg		
5.1	mg/kg		
0.21	mg/kg		
10	mg/kg		
0.1	mg/kg	Minimum	
1.5	mg/kg		
140000	µg/L		
120000	µg/L		
2100	µg/L		
4100	µg/L		
1700	µg/L	Minimum	
2500	µg/L		
4600	µg/L		
70000	µg/L		
0.3	mg/kg	Minimum	
12	mg/kg		
250	mg/kg		
1000	mg/kg		
2500	mg/kg		
1100	mg/kg		

180	mg/kg		
320	mg/kg		
18	mg/kg		
160	mg/kg		
10	mg/kg	Minimum	
170	mg/kg		
2100000	µg/L		
1800000	µg/L		
0.3	µg/L	Minimum	
42000	µg/L		
82000	µg/L		
35000	µg/L		
50000	µg/L		
93000	µg/L		
1000000	µg/L		
0.001	mg/kg	Minimum	
74	mg/kg		
55	mg/kg		
210	mg/kg		
380	mg/kg		
750	mg/kg		
41	mg/kg	Minimum	
79	mg/kg		
110	mg/kg		
2900	mg/kg		
59	mg/kg		
680	mg/kg		
830000	µg/L		
710000	µg/L		
0.002	µg/L	Minimum	
420000	µg/L		
820000	µg/L		
350000	µg/L		
500000	µg/L		
930000	µg/L		
410000	µg/L		
0.76	mg/kg	Minimum	
1600	mg/kg		
1600	mg/kg		
4900	mg/kg		
2.5	mg/kg	Minimum	
1200	mg/kg		
62000	mg/kg		
58	µg/L	Minimum	
3600000	µg/L		
7200000	µg/L		
3100000	µg/L		

4400000	µg/L		
8100000	µg/L		
0.76	mg/kg	Minimum	
1500	mg/kg		
1600	mg/kg		
5000	mg/kg		
1200	mg/kg	Minimum	
52000	mg/kg		
48000	µg/L	Minimum	
3600000	µg/L		
7200000	µg/L		
3100000	µg/L		
4400000	µg/L		
8100000	µg/L		
0.57	mg/kg	Minimum	
2700	mg/kg		
3100	mg/kg		
11000	mg/kg		
8.9	mg/kg	Minimum	
2100	mg/kg		
58000	mg/kg		
7.3	µg/L	Minimum	
5200000	µg/L		
10000000	µg/L		
4400000	µg/L		
6200000	µg/L		
11000000	µg/L		
1	mg/kg	Minimum	
59	mg/kg		
22	mg/kg		
69	mg/kg		
98	mg/kg		
8	mg/kg	Minimum	
10	mg/kg		
9.1	mg/kg		
34	mg/kg		
62	mg/kg		
180	mg/kg		
30	mg/kg		
320	mg/kg		
0.27	µg/L	Minimum	
8900	µg/L		
17000	µg/L		
7600	µg/L		
10000	µg/L		
19000	µg/L		
1.4	mg/kg	Minimum	

260	mg/kg		
270	mg/kg		
880	mg/kg		
170	mg/kg	Minimum	
1200	mg/kg		
0.14	µg/L	Minimum	
52000	µg/L		
100000	µg/L		
44000	µg/L		
62000	µg/L		
110000	µg/L		
1.9	mg/kg	Minimum	
590	mg/kg		
520	mg/kg		
1300	mg/kg		
180	mg/kg	Minimum	
380	mg/kg		
2500	mg/kg		
90	µg/L	Minimum	
210000	µg/L		
410000	µg/L		
170000	µg/L		
250000	µg/L		
460000	µg/L		
1.7	mg/kg	Minimum	
320	mg/kg		
470	mg/kg		
5400	mg/kg		
240	mg/kg	Minimum	
940	mg/kg		
76	µg/L	Minimum	
370000	µg/L		
740000	µg/L		
320000	µg/L		
450000	µg/L		
830000	µg/L		
2.4	mg/kg	Minimum	
930	mg/kg		
1000	mg/kg		
3500	mg/kg		
620	mg/kg	Minimum	
4000	mg/kg		
0.041	µg/L	Minimum	
370000	µg/L		
740000	µg/L		
320000	µg/L		
450000	µg/L		

830000	µg/L		
1.2	mg/kg	Minimum	
44	mg/kg		
31	mg/kg		
65	mg/kg		
24	mg/kg	Minimum	
250	mg/kg		
0.018	µg/L	Minimum	
8900	µg/L		
17000	µg/L		
7600	µg/L		
10000	µg/L		
19000	µg/L		
0.33	mg/kg	Minimum	
190	mg/kg		
220	mg/kg		
950	mg/kg		
120	mg/kg	Minimum	
540	mg/kg		
0.034	µg/L	Minimum	
70000	µg/L		
130000	µg/L		
59000	µg/L		
83000	µg/L		
150000	µg/L		
2.2	mg/kg	Minimum	
280	mg/kg		
380	mg/kg		
2600	mg/kg		
23	mg/kg	Minimum	
220	mg/kg		
3600	mg/kg		
0.4	µg/L	Minimum	
650000	µg/L		
1200000	µg/L		
560000	µg/L		
780000	µg/L		
1400000	µg/L		
0.53	mg/kg	Minimum	
640	mg/kg		
680	mg/kg		
2200	mg/kg		
19	mg/kg	Minimum	
500	mg/kg		
18000	mg/kg		
39	µg/L	Minimum	
1300000	µg/L		

2500000	µg/L		
1100000	µg/L		
1500000	µg/L		
2900000	µg/L		
2	mg/kg	Minimum	
930	mg/kg		
1100	mg/kg		
5900	mg/kg		
620	mg/kg	Minimum	
2700	mg/kg		
43	µg/L	Minimum	
370000	µg/L		
740000	µg/L		
320000	µg/L		
450000	µg/L		
830000	µg/L		
0.76	mg/kg	Minimum	
200	mg/kg		
240	mg/kg		
1000	mg/kg		
160	mg/kg	Minimum	
8500	mg/kg		
3300	µg/L	Minimum	
840000	µg/L		
1600000	µg/L		
710000	µg/L		
1000000	µg/L		
1800000	µg/L		
0.56	mg/kg	Minimum	
99	mg/kg		
220	mg/kg		
1000	mg/kg		
5900	mg/kg		
34	mg/kg		
160	mg/kg		
57	mg/kg		
27	mg/kg		
36	mg/kg		
10	mg/kg	Minimum	
77	mg/kg		
3400	mg/kg		
1100	µg/L		
990	µg/L		
11	µg/L	Minimum	
26000	µg/L		
51000	µg/L		
22000	µg/L		

31000	µg/L		
58000	µg/L		
570	µg/L		
1.1	mg/kg	Minimum	
140	mg/kg		
150	mg/kg		
590	mg/kg		
12	mg/kg	Minimum	
100	mg/kg		
2900	mg/kg		
30	µg/L	Minimum	
270000	µg/L		
520000	µg/L		
230000	µg/L		
320000	µg/L		
590000	µg/L		
1.5	mg/kg	Minimum	
290	mg/kg		
470	mg/kg		
1900	mg/kg		
4600	mg/kg		
710	mg/kg		
340	mg/kg		
460	mg/kg		
320	mg/kg		
1100	mg/kg		
20	mg/kg	Minimum	
220	mg/kg		
3600	mg/kg		
0.25	µg/L	Minimum	
390000	µg/L		
770000	µg/L		
330000	µg/L		
470000	µg/L		
870000	µg/L		
0.59	mg/kg	Minimum	
3.9	mg/kg		
6	mg/kg		
130	mg/kg		
3.1	mg/kg	Minimum	
130	mg/kg		
0.14	µg/L	Minimum	
1800	µg/L		
3600	µg/L		
1500	µg/L		
2200	µg/L		
4000	µg/L		

0.59	mg/kg		
1.9	mg/kg		
0.54	mg/kg	Minimum	
2.6	mg/kg		
14	mg/kg		
10	mg/kg		
0.41	mg/kg	Minimum	
0.79	mg/kg		
3	mg/kg		
120	mg/kg		
1.5	mg/kg		
65	mg/kg		
8300	µg/L		
7100	µg/L		
0.14	µg/L	Minimum	
4900	µg/L		
9600	µg/L		
4200	µg/L		
5900	µg/L		
10000	µg/L		
4100	µg/L		
0.59	mg/kg		
0.09	mg/kg	Minimum	
0.54	mg/kg		
2	mg/kg		
3.4	mg/kg		
10	mg/kg		
0.41	mg/kg		
0.79	mg/kg		
0.14	mg/kg		
5.9	mg/kg		
0.072	mg/kg	Minimum	
0.75	mg/kg		
8300	µg/L		
7100	µg/L		
0.14	µg/L	Minimum	
520	µg/L		
1000	µg/L		
440	µg/L		
620	µg/L		
1100	µg/L		
4100	µg/L		
0.34	mg/kg		
3	mg/kg		
0.54	mg/kg	Minimum	
1.7	mg/kg		
2.2	mg/kg		

13	mg/kg		
0.41	mg/kg	Minimum	
0.8	mg/kg		
4.9	mg/kg		
280	mg/kg		
620	mg/kg		
2.4	mg/kg		
1.5	mg/kg		
8300	µg/L		
7100	µg/L		
0.14	µg/L	Minimum	
1600	µg/L		
3100	µg/L		
1300	µg/L		
1900	µg/L		
3600	µg/L		
4100	µg/L		
0.59	mg/kg	Minimum	
30	mg/kg		
1.6	mg/kg		
5.3	mg/kg		
6.5	mg/kg		
66	mg/kg		
1.2	mg/kg		
2.4	mg/kg		
48	mg/kg		
7200	mg/kg		
24	mg/kg		
1.4	mg/kg	Minimum	
89000	µg/L		
76000	µg/L		
0.14	µg/L	Minimum	
1600	µg/L		
3100	µg/L		
1300	µg/L		
1900	µg/L		
3600	µg/L		
44000	µg/L		
660000	pCi/g		
660000	pCi/g		
660000	pCi/g		
660000	pCi/g		
2600	pCi/g		
2200	pCi/g	Minimum	
350000	pCi/g		
620000	pCi/g		
130000	pCi/g		

40000	pCi/g		
40000	pCi/g		
320000	pCi/g		
320000	pCi/g		
440	pCi/g	Minimum	
210000	pCi/g		
310000	pCi/g		
260000	pCi/g		
58	pCi/L	Minimum	
760000000	pCi/L		
750000000	pCi/L		
1700	pCi/L		
1700	pCi/L		
13000000000	pCi/L		
910000000	pCi/L		
1700	pCi/L		
7800000000	pCi/L		
1700000000	pCi/L		
57000000	pCi/L		
1800000000	pCi/L		
22000	pCi/g		
22000	pCi/g		
22000	pCi/g		
22000	pCi/g		
14000	pCi/g		
3300	pCi/g	Minimum	
17000	pCi/g		
13000	pCi/g		
19000	pCi/g		
17000	pCi/g		
17000	pCi/g		
11000	pCi/g		
10000	pCi/g		
7700	pCi/g		
11000	pCi/g		
11000	pCi/g		
3200	pCi/g	Minimum	
19000	pCi/L		
1400000000	pCi/L		
1400000000	pCi/L		
94000	pCi/L		
94000	pCi/L		
3300000000	pCi/L		
270000000	pCi/L		
4700	pCi/L	Minimum	
3000000000	pCi/L		
9900000000	pCi/L		

75000000	pCi/L		
2700000000	pCi/L		
50000	pCi/g		
50000	pCi/g		
50000	pCi/g		
50000	pCi/g		
32000	pCi/g		
7200	pCi/g	Minimum	
37000	pCi/g		
29000	pCi/g		
42000	pCi/g		
38000	pCi/g		
37000	pCi/g		
24000	pCi/g		
23000	pCi/g		
17000	pCi/g		
23000	pCi/g		
24000	pCi/g		
6800	pCi/g	Minimum	
46000	pCi/L		
3100000000	pCi/L		
3100000000	pCi/L		
230000	pCi/L		
230000	pCi/L		
7300000000	pCi/L		
590000000	pCi/L		
11000	pCi/L	Minimum	
6500000000	pCi/L		
21000000000	pCi/L		
160000000	pCi/L		
5800000000	pCi/L		

14000	pCi/g		
14000	pCi/g		
14000	pCi/g		
14000	pCi/g		
9600	pCi/g		
2100	pCi/g	Minimum	
15000	pCi/g		
15000	pCi/g		
15000	pCi/g		
15000	pCi/g		
15000	pCi/g		
7600	pCi/g		
7600	pCi/g		
5500	pCi/g	Minimum	
7500	pCi/g		
7600	pCi/g		
7000	pCi/g		
7600	pCi/L		
19000000000	pCi/L		
18000000000	pCi/L		
3800	pCi/L	Minimum	
3800	pCi/L	Minimum	
39000000000	pCi/L		
3300000000	pCi/L		
23000	pCi/L		
37000000000	pCi/L		
1.2E+11	pCi/L		
970000000	pCi/L		
34000000000	pCi/L		
10000	pCi/g		
10000	pCi/g		
10000	pCi/g		
10000	pCi/g		
740	pCi/g		
170	pCi/g	Minimum	
10000	pCi/g		
10000	pCi/g		
10000	pCi/g		
9700	pCi/g		
9700	pCi/g		
5300	pCi/g		
5300	pCi/g		
3800	pCi/g	Minimum	
5200	pCi/g		
5200	pCi/g		
5000	pCi/g		
1000	pCi/L	Minimum	

2200000000	pCi/L		
2200000000	pCi/L		
1700	pCi/L		
1700	pCi/L		
12000000000	pCi/L		
900000000	pCi/L		
17000	pCi/L		
8300000000	pCi/L		
14000000000	pCi/L		
120000000	pCi/L		
4200000000	pCi/L		
90000	pCi/g		
90000	pCi/g		
90000	pCi/g		
90000	pCi/g		
25000	pCi/g		
7400	pCi/g	Minimum	
90000	pCi/g		
90000	pCi/g		
76000	pCi/g		
79000	pCi/g		
75000	pCi/g		
45000	pCi/g		
45000	pCi/g		
28000	pCi/g	Minimum	
42000	pCi/g		
45000	pCi/g		
44000	pCi/g		
2500	pCi/L	Minimum	
2900000000	pCi/L		
2800000000	pCi/L		
10000	pCi/L		
10000	pCi/L		
27000000000	pCi/L		
1900000000	pCi/L		
2500	pCi/L	Minimum	
16000000000	pCi/L		
16000000000	pCi/L		
170000000	pCi/L		
5900000000	pCi/L		
76000	pCi/g		
76000	pCi/g		
76000	pCi/g		
76000	pCi/g		
130	pCi/g		
120	pCi/g	Minimum	
19000	pCi/g		

20000	pCi/g		
7500	pCi/g		
2200	pCi/g		
2200	pCi/g		
33000	pCi/g		
33000	pCi/g		
500	pCi/g	Minimum	
27000	pCi/g		
32000	pCi/g		
4700	pCi/g		
650	pCi/L		
41000000	pCi/L		
40000000	pCi/L		
6500	pCi/L		
6500	pCi/L		
750000000	pCi/L		
51000000	pCi/L		
79	pCi/L	Minimum	
430000000	pCi/L		
89000000	pCi/L		
3100000	pCi/L		
99000000	pCi/L		
4000000	pCi/g		
4000000	pCi/g		
4000000	pCi/g		
4000000	pCi/g		
1200	pCi/g		
1100	pCi/g	Minimum	
320000	pCi/g		
1300000	pCi/g		
83000	pCi/g		
20000	pCi/g		
21000	pCi/g		
1100000	pCi/g		
1200000	pCi/g		
440	pCi/g	Minimum	
1100000	pCi/g		
920000	pCi/g		
300000	pCi/g		
190	pCi/L	Minimum	
370000000	pCi/L		
370000000	pCi/L		
1700	pCi/L		
1700	pCi/L		
6600000000	pCi/L		
450000000	pCi/L		
690	pCi/L		

3800000000	pCi/L		
850000000	pCi/L		
28000000	pCi/L		
890000000	pCi/L		
7100000	pCi/g		
7100000	pCi/g		
7100000	pCi/g		
7100000	pCi/g		
1200	pCi/g		
1100	pCi/g	Minimum	
340000	pCi/g		
1600000	pCi/g		
86000	pCi/g		
21000	pCi/g		
21000	pCi/g		
1500000	pCi/g		
1700000	pCi/g		
470	pCi/g	Minimum	
1600000	pCi/g		
1100000	pCi/g		
330000	pCi/g		
200	pCi/L	Minimum	
380000000	pCi/L		
370000000	pCi/L		
1800	pCi/L		
1800	pCi/L		
7000000000	pCi/L		
480000000	pCi/L		
740	pCi/L		
4000000000	pCi/L		
810000000	pCi/L		
29000000	pCi/L		
920000000	pCi/L		
7600000	pCi/g		
7600000	pCi/g		
7600000	pCi/g		
7600000	pCi/g		
12000000	pCi/g		
2800000	pCi/g	Minimum	
7300000	pCi/g		
7300000	pCi/g		
7200000	pCi/g		
6600000	pCi/g		
6700000	pCi/g		
3600000	pCi/g		
3600000	pCi/g		

9600	pCi/g	Minimum	
3500000	pCi/g		
3600000	pCi/g		
3600000	pCi/g		
4200	pCi/L	Minimum	
1.2E+12	pCi/L		
1.2E+12	pCi/L		
37000	pCi/L		
37000	pCi/L		
2.5E+12	pCi/L		
2.2E+11	pCi/L		
15000	pCi/L		
2.4E+12	pCi/L		
8.4E+12	pCi/L		
64000000000	pCi/L		
2.2E+12	pCi/L		
14000	pCi/g		
14000	pCi/g		
14000	pCi/g		
14000	pCi/g		
3	pCi/g		
2.1	pCi/g	Minimum	
3400	pCi/g		
3800	pCi/g		
930	pCi/g		
400	pCi/g		
390	pCi/g		
6100	pCi/g		
4800	pCi/g		
81	pCi/g	Minimum	
2000	pCi/g		
5800	pCi/g		
830	pCi/g		
1	pCi/L	Minimum	
7500000	pCi/L		
7400000	pCi/L		
32	pCi/L		
32	pCi/L		
120000000	pCi/L		
8500000	pCi/L		
640	pCi/L		
72000000	pCi/L		
20000000	pCi/L		
550000	pCi/L		
17000000	pCi/L		
28000	pCi/g		
28000	pCi/g		

28000	pCi/g		
28000	pCi/g		
7.7	pCi/g		
2.6	pCi/g	Minimum	
5000	pCi/g		
5500	pCi/g		
1200	pCi/g		
550	pCi/g		
520	pCi/g		
10000	pCi/g		
6900	pCi/g		
68	pCi/g	Minimum	
2000	pCi/g		
9600	pCi/g		
1000	pCi/g		
0.9	pCi/L	Minimum	
10000000	pCi/L		
9900000	pCi/L		
27	pCi/L		
27	pCi/L		
110000000	pCi/L		
7600000	pCi/L		
540	pCi/L		
67000000	pCi/L		
51000000	pCi/L		
640000	pCi/L		
21000000	pCi/L		
180000	pCi/g		
180000	pCi/g		
180000	pCi/g		
180000	pCi/g		
490000	pCi/g		
110000	pCi/g	Minimum	
150000	pCi/g		
120000	pCi/g		
170000	pCi/g		
160000	pCi/g		
160000	pCi/g		
90000	pCi/g		
89000	pCi/g		
65000	pCi/g		
89000	pCi/g		
90000	pCi/g		
34000	pCi/g	Minimum	
900000	pCi/L	Minimum	
48000000000	pCi/L		
47000000000	pCi/L		

900000	pCi/L	Minimum	
900000	pCi/L	Minimum	
1E+11	pCi/L		
8500000000	pCi/L		
900000	pCi/L	Minimum	
96000000000	pCi/L		
3.2E+11	pCi/L		
2400000000	pCi/L		
88000000000	pCi/L		
34000	pCi/g		
34000	pCi/g		
34000	pCi/g		
34000	pCi/g		
2300	pCi/g		
1500	pCi/g	Minimum	
24000	pCi/g		
19000	pCi/g		
6000	pCi/g		
15000	pCi/g		
9300	pCi/g		
17000	pCi/g		
13000	pCi/g		
12000	pCi/g		
13000	pCi/g		
17000	pCi/g		
5600	pCi/g	Minimum	
5700	pCi/L	Minimum	
520000000	pCi/L		
510000000	pCi/L		
170000	pCi/L		
170000	pCi/L		
8300000000	pCi/L		
570000000	pCi/L		
330000	pCi/L		
4800000000	pCi/L		
1500000000	pCi/L		
38000000	pCi/L		
1200000000	pCi/L		
16000	pCi/g		
16000	pCi/g		
16000	pCi/g		
16000	pCi/g		
12000	pCi/g		
2900	pCi/g	Minimum	
16000	pCi/g		
16000	pCi/g		
15000	pCi/g		

13000	pCi/g		
13000	pCi/g		
8300	pCi/g		
8300	pCi/g		
430	pCi/g	Minimum	
8100	pCi/g		
8300	pCi/g		
8200	pCi/g		
59	pCi/L	Minimum	
1200000000	pCi/L		
1200000000	pCi/L		
1700	pCi/L		
1700	pCi/L		
8000000000	pCi/L		
570000000	pCi/L		
1700	pCi/L		
5200000000	pCi/L		
8000000000	pCi/L		
68000000	pCi/L		
2300000000	pCi/L		
32000	pCi/g		
32000	pCi/g		
32000	pCi/g		
32000	pCi/g		
1200	pCi/g		
1100	pCi/g	Minimum	
29000	pCi/g		
31000	pCi/g		
23000	pCi/g		
13000	pCi/g		
13000	pCi/g		
15000	pCi/g		
15000	pCi/g		
470	pCi/g	Minimum	
15000	pCi/g		
15000	pCi/g		
15000	pCi/g		
63	pCi/L	Minimum	
390000000	pCi/L		
390000000	pCi/L		
1800	pCi/L		
1800	pCi/L		
7200000000	pCi/L		
490000000	pCi/L		
1800	pCi/L		
4100000000	pCi/L		
850000000	pCi/L		

30000000	pCi/L		
950000000	pCi/L		
2700000	pCi/g		
2700000	pCi/g		
2700000	pCi/g		
2700000	pCi/g		
1300	pCi/g		
1200	pCi/g	Minimum	
340000	pCi/g		
1200000	pCi/g		
90000	pCi/g		
23000	pCi/g		
23000	pCi/g		
930000	pCi/g		
960000	pCi/g		
520	pCi/g	Minimum	
270000	pCi/g		
810000	pCi/g		
310000	pCi/g		
68	pCi/L	Minimum	
420000000	pCi/L		
420000000	pCi/L		
2000	pCi/L		
2000	pCi/L		
7800000000	pCi/L		
530000000	pCi/L		
2000	pCi/L		
4500000000	pCi/L		
900000000	pCi/L		
32000000	pCi/L		
1000000000	pCi/L		
3200000	pCi/g		
3200000	pCi/g		
3200000	pCi/g		
3200000	pCi/g		
160	pCi/g		
150	pCi/g	Minimum	
46000	pCi/g		
250000	pCi/g		
11000	pCi/g		
2800	pCi/g		
2800	pCi/g		
290000	pCi/g		
310000	pCi/g		
62	pCi/g	Minimum	
39000	pCi/g		
200000	pCi/g		

46000	pCi/g		
8.1	pCi/L	Minimum	
50000000	pCi/L		
50000000	pCi/L		
240	pCi/L		
240	pCi/L		
920000000	pCi/L		
63000000	pCi/L		
240	pCi/L		
530000000	pCi/L		
100000000	pCi/L		
3800000	pCi/L		
120000000	pCi/L		
6600000	pCi/g		
6600000	pCi/g		
6600000	pCi/g	Minimum	
6600000	pCi/g		
13000000000	pCi/g		
3000000000	pCi/g		
6300000	pCi/g		
5800000	pCi/g		
3000000	pCi/g		
6000000	pCi/g		
4400000	pCi/g		
3300000	pCi/g		
2300000	pCi/g		
480000	pCi/g		
360000	pCi/g	Minimum	
3400000	pCi/g		
1900000	pCi/g		
1600000000	pCi/L	Minimum	
1.3E+13	pCi/L		
1.3E+13	pCi/L	Minimum	
1600000000	pCi/L	Minimum	
1600000000	pCi/L	Minimum	
2.7E+13	pCi/L		
2.3E+12	pCi/L		
1600000000	pCi/L	Minimum	
2.6E+13	pCi/L		
9E+13	pCi/L		
6.8E+11	pCi/L		
2.4E+13	pCi/L		
10000000	pCi/g		
10000000	pCi/g		
10000000	pCi/g		
10000000	pCi/g		
27000	pCi/g		

6200	pCi/g	Minimum	
1800000	pCi/g		
3400000	pCi/g		
540000	pCi/g		
150000	pCi/g		
150000	pCi/g		
1600000	pCi/g		
1700000	pCi/g		
510	pCi/g	Minimum	
150000	pCi/g		
1600000	pCi/g		
570000	pCi/g		
220	pCi/L	Minimum	
2700000000	pCi/L		
2600000000	pCi/L		
1900	pCi/L		
1900	pCi/L		
6100000000	pCi/L		
500000000	pCi/L		
390	pCi/L		
5500000000	pCi/L		
18000000000	pCi/L		
140000000	pCi/L		
5000000000	pCi/L		
3000000	pCi/g		
3000000	pCi/g		
3000000	pCi/g		
3000000	pCi/g		
27000	pCi/g		
6200	pCi/g	Minimum	
1200000	pCi/g		
1900000	pCi/g		
480000	pCi/g		
140000	pCi/g		
140000	pCi/g		
910000	pCi/g		
960000	pCi/g		
510	pCi/g	Minimum	
140000	pCi/g		
940000	pCi/g		
450000	pCi/g		
220	pCi/L	Minimum	
2700000000	pCi/L		
2600000000	pCi/L		
1900	pCi/L		
1900	pCi/L		
6100000000	pCi/L		

500000000	pCi/L		
390	pCi/L		
5500000000	pCi/L		
18000000000	pCi/L		
140000000	pCi/L		
5000000000	pCi/L		
100000	pCi/g		
100000	pCi/g		
100000	pCi/g		
100000	pCi/g		
30000	pCi/g		
6700	pCi/g	Minimum	
100000	pCi/g		
100000	pCi/g		
90000	pCi/g		
64000	pCi/g		
64000	pCi/g		
51000	pCi/g		
51000	pCi/g		
550	pCi/g	Minimum	
40000	pCi/g		
51000	pCi/g		
48000	pCi/g		
240	pCi/L	Minimum	
2900000000	pCi/L		
2900000000	pCi/L		
2100	pCi/L		
2100	pCi/L		
6600000000	pCi/L		
540000000	pCi/L		
430	pCi/L		
6000000000	pCi/L		
20000000000	pCi/L		
150000000	pCi/L		
5400000000	pCi/L		
	pCi/g		No ESL because internal and external exposure is set or calculated as 0 for this radionuclide.
	pCi/g		No ESL because internal and external exposure is set or calculated as 0 for this radionuclide.
	pCi/g		No ESL because internal and external exposure is set or calculated as 0 for this radionuclide.
	pCi/g		No ESL because internal and external exposure is set or calculated as 0 for this radionuclide.
29000	pCi/g		
6600	pCi/g	Minimum	
2300000	pCi/g		
5500000	pCi/g		

610000	pCi/g		
160000	pCi/g		
160000	pCi/g		
2400000	pCi/g		
2800000	pCi/g		
540	pCi/g	Minimum	
160000	pCi/g		
2600000	pCi/g		
690000	pCi/g		
230	pCi/L	Minimum	
2900000000	pCi/L		
2800000000	pCi/L		
2100	pCi/L		
2100	pCi/L		
6500000000	pCi/L		
530000000	pCi/L		
420	pCi/L		
5900000000	pCi/L		
19000000000	pCi/L		
150000000	pCi/L		
5300000000	pCi/L		
43000	pCi/g		
43000	pCi/g		
43000	pCi/g		
43000	pCi/g		
30000	pCi/g		
6900	pCi/g	Minimum	
41000	pCi/g		
42000	pCi/g		
39000	pCi/g		
34000	pCi/g		
34000	pCi/g		
21000	pCi/g		
21000	pCi/g		
550	pCi/g	Minimum	
18000	pCi/g		
21000	pCi/g		
20000	pCi/g		
240	pCi/L	Minimum	
3000000000	pCi/L		
2900000000	pCi/L		
2200	pCi/L		
2200	pCi/L		
6800000000	pCi/L		
550000000	pCi/L		
440	pCi/L		
6100000000	pCi/L		

20000000000	pCi/L		
150000000	pCi/L		
5500000000	pCi/L		
	mg/kg		
13	mg/kg	Minimum	
13	mg/kg		
42	mg/kg		
10	mg/kg	Minimum	
3500	mg/kg		
420	µg/L	Minimum	
210000	µg/L		
410000	µg/L		
170000	µg/L		
250000	µg/L		
460000	µg/L		
7.4	mg/kg		
0.26	mg/kg	Minimum	
0.45	mg/kg		
0.33	mg/kg		
200	mg/kg		
0.2	mg/kg	Minimum	
0.4	mg/kg		
11	mg/kg		
27000	mg/kg		
5.9	mg/kg		
12	mg/kg		
91000	µg/L		
78000	µg/L		
320	µg/L	Minimum	
960000	µg/L		
1800000	µg/L		
820000	µg/L		
1100000	µg/L		
2100000	µg/L		
45000	µg/L		
1	mg/kg	Minimum	
1100	mg/kg		
1600	mg/kg		
23000	mg/kg		
900	mg/kg	Minimum	
19000	mg/kg		
190	µg/L	Minimum	
8300000	µg/L		
16000000	µg/L		
7100000	µg/L		
10000000	µg/L		
18000000	µg/L		

1400	mg/kg		
800	mg/kg	Minimum	
1300	mg/kg		
1000	mg/kg		
57000	mg/kg		
0.3	mg/kg	Minimum	
540	mg/kg		
540	mg/kg		
1500	mg/kg		
24	mg/kg	Minimum	
430	mg/kg		
55000	mg/kg		
1300	µg/L	Minimum	
3100000	µg/L		
6100000	µg/L		
2600000	µg/L		
3700000	µg/L		
6900000	µg/L		
0.55	mg/kg	Minimum	
30	mg/kg		
40	mg/kg		
200	mg/kg		
1600	mg/kg		
3.9	mg/kg	Minimum	
28	mg/kg		
6.9	mg/kg		
5.4	mg/kg		
6.8	mg/kg		
22	mg/kg		
1400	mg/kg		
94000	µg/L		
80000	µg/L		
4300	µg/L	Minimum	
26000	µg/L		
51000	µg/L		
22000	µg/L		
31000	µg/L		
58000	µg/L		
46000	µg/L		
5.1	mg/kg	Minimum	
61	mg/kg	Minimum	
37	µg/L	Minimum	
45000	mg/kg		
36000	mg/kg		
80000	mg/kg		
1000	mg/kg	Minimum	
36000	mg/kg		

6500000	mg/kg		
1000	mg/kg	Minimum	
380	mg/kg		
550	mg/kg		
100	mg/kg	Minimum	
790	mg/kg		
190000	mg/kg		
30	µg/L	Minimum	
3500000	µg/L		
7000000	µg/L		
3000000	µg/L		
4200000	µg/L		
7900000	µg/L		
0.11	mg/kg	Minimum	
550	mg/kg		
0.14	mg/kg		
0.68	mg/kg		
2.4	mg/kg		
3.9	mg/kg		
0.11	mg/kg	Minimum	
0.21	mg/kg		
870	mg/kg		
38000	mg/kg		
600	mg/kg		
440	mg/kg		
12000	mg/kg		
11000	µg/L		
10000	µg/L		
190	µg/L	Minimum	
10000000	µg/L		
20000000	µg/L		
8900000	µg/L		
12000000	µg/L		
23000000	µg/L		
5700	µg/L		
11	mg/kg	Minimum	
18	mg/kg		
130000	mg/kg		
9.1	mg/kg	Minimum	
130	mg/kg		
30	µg/L	Minimum	
3400000	µg/L		
6700000	µg/L		
2900000	µg/L		
4000000	µg/L		
7500000	µg/L		
19000	mg/kg		

5900	mg/kg		
8000	mg/kg		
6.7	mg/kg	Minimum	
13000	mg/kg		
1700000	mg/kg		
6.9	mg/kg	Minimum	
16	mg/kg		
1500	mg/kg	Minimum	
2700	mg/kg		
290	mg/kg		
4700	mg/kg		
270	mg/kg	Minimum	
49	mg/kg		
61	mg/kg		
22	mg/kg	Minimum	
200	mg/kg		
17000	mg/kg		
2200	µg/L	Minimum	
310000	µg/L		
600000	µg/L		
260000	µg/L		
370000	µg/L		
680000	µg/L		
36	mg/kg		
140	mg/kg		
9.2	mg/kg	Minimum	
210	mg/kg		
380	mg/kg		
750	mg/kg		
41	mg/kg	Minimum	
79	mg/kg		
110	mg/kg		
2900	mg/kg		
59	mg/kg		
680	mg/kg		
580000	µg/L		
500000	µg/L		
100	µg/L	Minimum	
3400000	µg/L		
6700000	µg/L		
2900000	µg/L		
4000000	µg/L		
7500000	µg/L		
290000	µg/L		
0.1	mg/kg	Minimum	
10	mg/kg		
4.8	mg/kg		

20	mg/kg		
50	mg/kg		
310	mg/kg		
3.6	mg/kg	Minimum	
7.2	mg/kg		
16	mg/kg		
1700	mg/kg		
150	mg/kg		
50	mg/kg		
8.1	mg/kg		
130	mg/kg		
270000	µg/L		
230000	µg/L		
19	µg/L	Minimum	
12000	µg/L		
24000	µg/L		
10000	µg/L		
15000	µg/L		
27000	µg/L		
130000	µg/L		
8400	mg/kg	Minimum	
380	mg/kg		
430	mg/kg		
18	mg/kg		
7.9	mg/kg	Minimum	
5500	mg/kg		
170000	mg/kg		
3200	µg/L	Minimum	
3100000	µg/L		
6100000	µg/L		
2600000	µg/L		
3700000	µg/L		
6900000	µg/L		
	mg/m^3	Minimum	
0.65	mg/kg	Minimum	
98	mg/kg		
2300	mg/kg		
12000	mg/kg		
300000	mg/kg		
75	mg/kg		
1700	mg/kg		
140	mg/kg		
6.3	mg/kg	Minimum	
7.3	mg/kg		
77	mg/kg		
14000	mg/kg		
16000000	µg/L		

14000000	µg/L		
15000	µg/L	Minimum	
260000	µg/L		
510000	µg/L		
220000	µg/L		
310000	µg/L		
580000	µg/L		
8300000	µg/L		
	mg/m^3	Minimum	
0.1	mg/kg	Minimum	
610	mg/kg		
240	mg/kg	Minimum	
350	mg/kg		
470	mg/kg		
76000	mg/kg		
460	µg/L	Minimum	
1300000	µg/L		
2700000	µg/L		
1100000	µg/L		
1600000	µg/L		
3000000	µg/L		
3300	mg/kg	Minimum	
360000	mg/kg	Minimum	
660000	mg/kg		
69000	mg/kg		
1100000	mg/kg		
8700	mg/kg	Minimum	
930	mg/kg	Minimum	
1100	mg/kg		
6800	mg/kg		
1100000	mg/kg		
71000	µg/L	Minimum	
24000000	µg/L		
47000000	µg/L		
20000000	µg/L		
28000000	µg/L		
53000000	µg/L		
15	mg/kg		
8.2	mg/kg	Minimum	
13	mg/kg		
11	mg/kg		
1900	mg/kg		
	mg/m^3	Minimum	
18	mg/kg		
10	mg/kg	Minimum	
	mg/m^3	Minimum	
28	mg/kg	Minimum	

22	mg/kg	Minimum	
47	mg/kg		
22	mg/kg		
6300	mg/kg		
18	µg/L	Minimum	
210000	µg/L		
420000	µg/L		
180000	µg/L		
250000	µg/L		
470000	µg/L		
	mg/m^3	Minimum	
11	mg/kg		
15	mg/kg		
110	mg/kg		
9.2	mg/kg	Minimum	
730	mg/kg		
9.2	mg/kg		
13	mg/kg		
120	mg/kg		
7.3	mg/kg	Minimum	
540	mg/kg		
0.3	mg/kg	Minimum	
4.4	mg/kg		
6	mg/kg		
45	mg/kg		
12	mg/kg		
3.5	mg/kg	Minimum	
280	mg/kg		
150	µg/L	Minimum	
52000	µg/L		
100000	µg/L		
44000	µg/L		
62000	µg/L		
110000	µg/L		
	mg/m^3	Minimum	
	mg/m^3	Minimum	
0.2	mg/kg	Minimum	
3700	mg/kg		
2100	mg/kg	Minimum	
3700	mg/kg		
2900	mg/kg		
850000	mg/kg		
470	µg/L	Minimum	
20000000	µg/L		
39000000	µg/L		
17000000	µg/L		
24000000	µg/L		

44000000	µg/L		
	mg/m^3	Minimum	
1100	mg/kg		
12	mg/kg	Minimum	
65	mg/kg		
1300	mg/kg		
1.6	mg/kg	Minimum	
9.2	mg/kg		
2.8	mg/kg		
270	mg/kg		
360	mg/kg		
890	mg/kg		
140000	mg/kg		
75000	µg/L		
65000	µg/L		
1000	µg/L	Minimum	
2600000	µg/L		
5100000	µg/L		
2200000	µg/L		
3100000	µg/L		
5700000	µg/L		
37000	µg/L		
	mg/m^3	Minimum	
1	mg/kg	Minimum	
140	mg/kg		
140	mg/kg		
400	mg/kg		
110	mg/kg	Minimum	
29000	mg/kg		
250	µg/L	Minimum	
1500000	µg/L		
3000000	µg/L		
1300000	µg/L		
1800000	µg/L		
3400000	µg/L		
2	mg/kg	Minimum	
290	mg/kg		
250	mg/kg		
580	mg/kg		
230	mg/kg	Minimum	
71000	mg/kg		
1100	µg/L	Minimum	
2300000	µg/L		
4600000	µg/L		
2000000	µg/L		
2800000	µg/L		
5200000	µg/L		

22	mg/kg		
120	mg/kg		
11000	mg/kg		
140	mg/kg		
17	mg/kg	Minimum	
30	mg/kg		
2.4	mg/kg		
1	mg/kg		
5.6	mg/kg		
820	mg/kg		
1000	mg/kg		
0.79	mg/kg	Minimum	
1.5	mg/kg		
4	mg/kg		
14000	mg/kg		
100	mg/kg		
100	mg/kg		
2	mg/kg		
2500	mg/kg		
25	mg/kg		
4.8	mg/kg		
26	mg/kg		
5000	mg/kg		
4.7	mg/kg		
3.6	mg/kg	Minimum	
4.1	mg/kg		
23	mg/kg		
59	mg/kg		
20	mg/kg		
25000	mg/kg		
0.16	mg/kg		
0.88	mg/kg		
41	mg/kg		
0.077	mg/kg	Minimum	
0.12	mg/kg		
0.095	mg/kg		
190	mg/kg		
98	mg/kg	Minimum	
150	mg/kg		
150	mg/kg		
66000	mg/kg		
	mg/m^3	Minimum	
0.18	mg/kg	Minimum	
98	mg/kg		
22	mg/kg	Minimum	
29	mg/kg		
16000	mg/kg		

77	mg/kg		
14000	mg/kg		
2100	µg/L	Minimum	
260000	µg/L		
510000	µg/L		
220000	µg/L		
310000	µg/L		
580000	µg/L		
12	mg/kg	Minimum	
32	mg/kg		
	mg/m^3	Minimum	
0.02	mg/kg	Minimum	
1.1	mg/kg		
1.8	mg/kg		
44	mg/kg		
100	mg/kg		
0.94	mg/kg	Minimum	
150	mg/kg		
830	µg/L	Minimum	
52000	µg/L		
100000	µg/L		
44000	µg/L		
62000	µg/L		
110000	µg/L		
	mg/m^3	Minimum	
0.1	mg/kg	Minimum	
290	mg/kg		
250	mg/kg		
610	mg/kg		
2000	mg/kg		
230	mg/kg	Minimum	
31000	mg/kg		
98	µg/L	Minimum	
1300000	µg/L		
2600000	µg/L		
1100000	µg/L		
1600000	µg/L		
3000000	µg/L		
0.11	mg/kg	Minimum	
3.3	mg/kg		
5.1	mg/kg		
110	mg/kg		
12	mg/kg		
2.7	mg/kg	Minimum	
120	mg/kg		
240	µg/L	Minimum	
77000	µg/L		

150000	µg/L		
66000	µg/L		
93000	µg/L		
170000	µg/L		
	mg/m^3	Minimum	
0.7	mg/kg	Minimum	
3200	mg/kg		
4000	mg/kg		
18000	mg/kg		
2600	mg/kg	Minimum	
500000	mg/kg		
110	µg/L	Minimum	
52000000	µg/L		
100000000	µg/L		
44000000	µg/L		
62000000	µg/L		
110000000	µg/L		
	mg/m^3	Minimum	
0.78	mg/kg	Minimum	
520	mg/kg		
550	mg/kg		
1700	mg/kg		
420	mg/kg	Minimum	
64000	mg/kg		
210	µg/L	Minimum	
5200000	µg/L		
10000000	µg/L		
4400000	µg/L		
6200000	µg/L		
11000000	µg/L		
	mg/m^3	Minimum	
430	mg/kg		
660	mg/kg		
11000	mg/kg		
350	mg/kg	Minimum	
1100000	mg/kg		
1.5	mg/kg		
1.3	mg/kg		
3.1	mg/kg		
1.2	mg/kg	Minimum	
1300	mg/kg		
	mg/m^3	Minimum	
1.3	mg/kg	Minimum	
2.2	mg/kg		
550	mg/kg		
2800	mg/kg		
32000	mg/kg		

900	mg/kg		
410	mg/kg		
560	mg/kg		
2.4	mg/kg		
8.7	mg/kg		
1000	mg/kg		
1.7	mg/kg	Minimum	
170	mg/kg		
8900000	µg/L		
7600000	µg/L		
130	µg/L	Minimum	
1300000	µg/L		
2600000	µg/L		
1100000	µg/L		
1600000	µg/L		
3000000	µg/L		
4400000	µg/L		

ESL ID
SEDIMENT_AQ(s)_1746-01-6
SEDIMENT_BA(i)_1746-01-6
SOIL_DM(ip)_1746-01-6
SOIL_DC(p)_1746-01-6
SOIL_EW_1746-01-6
SOIL_MS(i)_1746-01-6
SOIL_RF(f)_1746-01-6
WATER_AQ(w)_1746-01-6
WATER_DM(w)_1746-01-6
WATER_DC(w)_1746-01-6
WATER_MS(w)_1746-01-6
WATER_BA(w)_1746-01-6
WATER_RF(w)_1746-01-6
SEDIMENT_BA(i)_19406-51-0
SOIL_DM(ip)_19406-51-0
SOIL_DC(p)_19406-51-0
SOIL_GP_19406-51-0
SOIL_MS(i)_19406-51-0
SOIL_RF(f)_19406-51-0
WATER_DM(w)_19406-51-0
WATER_DC(w)_19406-51-0
WATER_MS(w)_19406-51-0
WATER_BA(w)_19406-51-0
WATER_RF(w)_19406-51-0
SEDIMENT_BA(i)_35572-78-2
SOIL_DM(ip)_35572-78-2
SOIL_DC(p)_35572-78-2
SOIL_GP_35572-78-2
SOIL_MS(i)_35572-78-2
SOIL_RF(f)_35572-78-2
WATER_DM(w)_35572-78-2
WATER_DC(w)_35572-78-2
WATER_MS(w)_35572-78-2
WATER_BA(w)_35572-78-2
WATER_RF(w)_35572-78-2
SEDIMENT_BA(i)_99-65-0
SEDIMENT_VGS(i)_99-65-0
SOIL_AK(fi)_99-65-0
SOIL_AK(f)_99-65-0
SOIL_AR(p)_99-65-0
SOIL_AR(i)_99-65-0
SOIL_AR(ip)_99-65-0
SOIL_DM(ip)_99-65-0
SOIL_DC(p)_99-65-0

SOIL_MS(i)_99-65-0
SOIL_RF(f)_99-65-0
WATER_AK(w)_99-65-0
WATER_AR(w)_99-65-0
WATER_AQ(w)_99-65-0
WATER_DM(w)_99-65-0
WATER_DC(w)_99-65-0
WATER_MS(w)_99-65-0
WATER_BA(w)_99-65-0
WATER_RF(w)_99-65-0
WATER_VGS(w)_99-65-0
SEDIMENT_AQ(s)_121-14-2
SEDIMENT_BA(i)_121-14-2
SOIL_DM(ip)_121-14-2
SOIL_DC(p)_121-14-2
SOIL_MS(i)_121-14-2
SOIL_RF(f)_121-14-2
WATER_AQ(w)_121-14-2
WATER_DM(w)_121-14-2
WATER_DC(w)_121-14-2
WATER_MS(w)_121-14-2
WATER_BA(w)_121-14-2
WATER_RF(w)_121-14-2
SEDIMENT_BA(i)_606-20-2
SOIL_DM(ip)_606-20-2
SOIL_DC(p)_606-20-2
SOIL_MS(i)_606-20-2
SOIL_RF(f)_606-20-2
WATER_AQ(w)_606-20-2
WATER_DM(w)_606-20-2
WATER_DC(w)_606-20-2
WATER_MS(w)_606-20-2
WATER_BA(w)_606-20-2
WATER_RF(w)_606-20-2
SEDIMENT_BA(i)_2691-41-0
SOIL_DM(ip)_2691-41-0
SOIL_DC(p)_2691-41-0
SOIL_EW_2691-41-0
SOIL_GP_2691-41-0
SOIL_MS(i)_2691-41-0
SOIL_RF(f)_2691-41-0
WATER_DM(w)_2691-41-0
WATER_DC(w)_2691-41-0
WATER_MS(w)_2691-41-0
WATER_BA(w)_2691-41-0
WATER_RF(w)_2691-41-0
SEDIMENT_BA(i)_55-63-0

SOIL_DM(ip)_55-63-0
SOIL_DC(p)_55-63-0
SOIL_MS(i)_55-63-0
SOIL_RF(f)_55-63-0
WATER_DM(w)_55-63-0
WATER_DC(w)_55-63-0
WATER_MS(w)_55-63-0
WATER_BA(w)_55-63-0
WATER_RF(w)_55-63-0
SEDIMENT_BA(i)_88-72-2
SOIL_DM(ip)_88-72-2
SOIL_DC(p)_88-72-2
SOIL_MS(i)_88-72-2
SOIL_RF(f)_88-72-2
WATER_DM(w)_88-72-2
WATER_DC(w)_88-72-2
WATER_MS(w)_88-72-2
WATER_BA(w)_88-72-2
WATER_RF(w)_88-72-2
SEDIMENT_BA(i)_99-08-1
SOIL_DM(ip)_99-08-1
SOIL_DC(p)_99-08-1
SOIL_MS(i)_99-08-1
SOIL_RF(f)_99-08-1
WATER_DM(w)_99-08-1
WATER_DC(w)_99-08-1
WATER_MS(w)_99-08-1
WATER_BA(w)_99-08-1
WATER_RF(w)_99-08-1
SEDIMENT_BA(i)_99-99-0
SOIL_DM(ip)_99-99-0
SOIL_DC(p)_99-99-0
SOIL_MS(i)_99-99-0
SOIL_RF(f)_99-99-0
WATER_DM(w)_99-99-0
WATER_DC(w)_99-99-0
WATER_MS(w)_99-99-0
WATER_BA(w)_99-99-0
WATER_RF(w)_99-99-0
SEDIMENT_BA(i)_78-11-5
SOIL_DM(ip)_78-11-5
SOIL_DC(p)_78-11-5
SOIL_MS(i)_78-11-5
SOIL_RF(f)_78-11-5
WATER_DM(w)_78-11-5
WATER_DC(w)_78-11-5
WATER_MS(w)_78-11-5

WATER_BA(w)_78-11-5
WATER_RF(w)_78-11-5
SEDIMENT_BA(i)_121-82-4
SEDIMENT_VGS(i)_121-82-4
SOIL_AK(fi)_121-82-4
SOIL_AK(f)_121-82-4
SOIL_AR(p)_121-82-4
SOIL_AR(i)_121-82-4
SOIL_AR(ip)_121-82-4
SOIL_DM(ip)_121-82-4
SOIL_DC(p)_121-82-4
SOIL_EW_121-82-4
SOIL_MS(i)_121-82-4
SOIL_RF(f)_121-82-4
WATER_DM(w)_121-82-4
WATER_DC(w)_121-82-4
WATER_MS(w)_121-82-4
WATER_BA(w)_121-82-4
WATER_RF(w)_121-82-4
SEDIMENT_BA(i)_479-45-8
SOIL_DM(ip)_479-45-8
SOIL_DC(p)_479-45-8
SOIL_MS(i)_479-45-8
SOIL_RF(f)_479-45-8
WATER_DM(w)_479-45-8
WATER_DC(w)_479-45-8
WATER_MS(w)_479-45-8
WATER_BA(w)_479-45-8
WATER_RF(w)_479-45-8
SEDIMENT_BA(i)_99-35-4
SOIL_DM(ip)_99-35-4
SOIL_DC(p)_99-35-4
SOIL_MS(i)_99-35-4
SOIL_RF(f)_99-35-4
WATER_DM(w)_99-35-4
WATER_DC(w)_99-35-4
WATER_MS(w)_99-35-4
WATER_BA(w)_99-35-4
WATER_RF(w)_99-35-4
SEDIMENT_BA(i)_118-96-7
SEDIMENT_VGS(i)_118-96-7
SOIL_AK(fi)_118-96-7
SOIL_AK(f)_118-96-7
SOIL_AR(p)_118-96-7
SOIL_AR(i)_118-96-7
SOIL_AR(ip)_118-96-7
SOIL_DM(ip)_118-96-7

SOIL_DC(p)_118-96-7
SOIL_EW_118-96-7
SOIL_GP_118-96-7
SOIL_MS(i)_118-96-7
SOIL_RF(f)_118-96-7
WATER_AK(w)_118-96-7
WATER_AR(w)_118-96-7
WATER_DM(w)_118-96-7
WATER_DC(w)_118-96-7
WATER_MS(w)_118-96-7
WATER_BA(w)_118-96-7
WATER_RF(w)_118-96-7
WATER_VGS(w)_118-96-7
SEDIMENT_AQ(s)_AL
SEDIMENT_BA(i)_AL
SEDIMENT_VGS(i)_AL
SOIL_AK(fi)_AL
SOIL_AK(f)_AL
SOIL_AR(p)_AL
SOIL_AR(i)_AL
SOIL_AR(ip)_AL
SOIL_DM(ip)_AL
SOIL_DC(p)_AL
SOIL_EW_AL
SOIL_GP_AL
SOIL_MS(i)_AL
SOIL_RF(f)_AL
WATER_AK(w)_AL
WATER_AR(w)_AL
WATER_AQ(w)_AL
WATER_DM(w)_AL
WATER_DC(w)_AL
WATER_MS(w)_AL
WATER_BA(w)_AL

WATER_RF(w)_AL
WATER_VGS(w)_AL
SEDIMENT_AQ(s)_SB
SEDIMENT_BA(i)_SB
SOIL_DM(ip)_SB
SOIL_DC(p)_SB
SOIL_EW_SB
SOIL_GP_SB
SOIL_MS(i)_SB
SOIL_RF(f)_SB
WATER_AQ(w)_SB
WATER_DM(w)_SB
WATER_DC(w)_SB
WATER_MS(w)_SB
WATER_BA(w)_SB
WATER_RF(w)_SB
SEDIMENT_AQ(s)_AS
SEDIMENT_BA(i)_AS
SEDIMENT_VGS(i)_AS
SOIL_AK(fi)_AS
SOIL_AK(f)_AS
SOIL_AR(p)_AS
SOIL_AR(i)_AS
SOIL_AR(ip)_AS
SOIL_DM(ip)_AS
SOIL_DC(p)_AS
SOIL_EW_AS
SOIL_GP_AS
SOIL_MS(i)_AS
SOIL_RF(f)_AS
WATER_AK(w)_AS
WATER_AR(w)_AS
WATER_AQ(w)_AS
WATER_DM(w)_AS
WATER_DC(w)_AS
WATER_MS(w)_AS
WATER_BA(w)_AS
WATER_RF(w)_AS
WATER_VGS(w)_AS
SEDIMENT_AQ(s)_BA
SEDIMENT_BA(i)_BA
SEDIMENT_VGS(i)_BA
SOIL_AK(fi)_BA
SOIL_AK(f)_BA
SOIL_AR(p)_BA
SOIL_AR(i)_BA
SOIL_AR(ip)_BA

SOIL_DM(ip)_BA
SOIL_DC(p)_BA
SOIL_EW_BA
SOIL_GP_BA
SOIL_MS(i)_BA
SOIL_RF(f)_BA
WATER_AK(w)_BA
WATER_AR(w)_BA
WATER_AQ(w)_BA
WATER_DM(w)_BA
WATER_DC(w)_BA
WATER_MS(w)_BA
WATER_BA(w)_BA
WATER_RF(w)_BA
WATER_VGS(w)_BA
SEDIMENT_BA(i)_BE
SOIL_DM(ip)_BE
SOIL_DC(p)_BE
SOIL_EW_BE
SOIL_GP_BE
SOIL_MS(i)_BE
SOIL_RF(f)_BE
WATER_AQ(w)_BE
WATER_DM(w)_BE
WATER_DC(w)_BE
WATER_MS(w)_BE
WATER_BA(w)_BE
WATER_RF(w)_BE
SEDIMENT_BA(i)_B
SEDIMENT_VGS(i)_B
SOIL_AK(fi)_B
SOIL_AK(f)_B
SOIL_AR(p)_B
SOIL_AR(i)_B
SOIL_AR(ip)_B
SOIL_DM(ip)_B
SOIL_DC(p)_B
SOIL_GP_B
SOIL_MS(i)_B
SOIL_RF(f)_B
WATER_AK(w)_B
WATER_AR(w)_B
WATER_AQ(w)_B
WATER_DM(w)_B
WATER_DC(w)_B
WATER_MS(w)_B
WATER_BA(w)_B

WATER_RF(w)_B
WATER_VGS(w)_B
SEDIMENT_AQ(s)_CD
SEDIMENT_BA(i)_CD
SEDIMENT_VGS(i)_CD
SOIL_AK(fi)_CD
SOIL_AK(f)_CD
SOIL_AR(p)_CD
SOIL_AR(i)_CD
SOIL_AR(ip)_CD
SOIL_DM(ip)_CD
SOIL_DC(p)_CD
SOIL_EW_CD
SOIL_GP_CD
SOIL_MS(i)_CD
SOIL_RF(f)_CD
WATER_AK(w)_CD
WATER_AR(w)_CD
WATER_AQ(w)_CD
WATER_DM(w)_CD
WATER_DC(w)_CD
WATER_MS(w)_CD
WATER_BA(w)_CD
WATER_RF(w)_CD
WATER_VGS(w)_CD
WATER_AQ(w)_CL(-1)
SEDIMENT_AQ(s)_CR
SEDIMENT_BA(i)_CR
SEDIMENT_VGS(i)_CR
SOIL_AK(fi)_CR
SOIL_AK(f)_CR
SOIL_AR(p)_CR
SOIL_AR(i)_CR
SOIL_AR(ip)_CR
SOIL_DM(ip)_CR
SOIL_DC(p)_CR
SOIL_MS(i)_CR
SOIL_RF(f)_CR
WATER_AK(w)_CR
WATER_AR(w)_CR
WATER_AQ(w)_CR
WATER_DM(w)_CR
WATER_DC(w)_CR
WATER_MS(w)_CR
WATER_BA(w)_CR
WATER_RF(w)_CR
WATER_VGS(w)_CR

SEDIMENT_BA(i)_CR(+6)
SEDIMENT_VGS(i)_CR(+6)
SOIL_AK(fi)_CR(+6)
SOIL_AK(f)_CR(+6)
SOIL_AR(p)_CR(+6)
SOIL_AR(i)_CR(+6)
SOIL_AR(ip)_CR(+6)
SOIL_DM(ip)_CR(+6)
SOIL_DC(p)_CR(+6)
SOIL_EW_CR(+6)
SOIL_GP_CR(+6)
SOIL_MS(i)_CR(+6)
SOIL_RF(f)_CR(+6)
WATER_AK(w)_CR(+6)
WATER_AR(w)_CR(+6)
WATER_AQ(w)_CR(+6)
WATER_DM(w)_CR(+6)
WATER_DC(w)_CR(+6)
WATER_MS(w)_CR(+6)
WATER_BA(w)_CR(+6)
WATER_RF(w)_CR(+6)
WATER_VGS(w)_CR(+6)
SEDIMENT_BA(i)_CO
SEDIMENT_VGS(i)_CO
SOIL_AK(fi)_CO
SOIL_AK(f)_CO
SOIL_AR(p)_CO
SOIL_AR(i)_CO
SOIL_AR(ip)_CO
SOIL_DM(ip)_CO
SOIL_DC(p)_CO
SOIL_GP_CO
SOIL_MS(i)_CO
SOIL_RF(f)_CO
WATER_AK(w)_CO
WATER_AR(w)_CO
WATER_AQ(w)_CO
WATER_DM(w)_CO
WATER_DC(w)_CO
WATER_MS(w)_CO
WATER_BA(w)_CO
WATER_RF(w)_CO
WATER_VGS(w)_CO
SEDIMENT_AQ(s)_CU
SEDIMENT_BA(i)_CU
SEDIMENT_VGS(i)_CU
SOIL_AK(fi)_CU

SOIL_AK(f)_CU
SOIL_AR(p)_CU
SOIL_AR(i)_CU
SOIL_AR(ip)_CU
SOIL_DM(ip)_CU
SOIL_DC(p)_CU
SOIL_EW_CU
SOIL_GP_CU
SOIL_MS(i)_CU
SOIL_RF(f)_CU
WATER_AK(w)_CU
WATER_AR(w)_CU
WATER_AQ(w)_CU
WATER_DM(w)_CU
WATER_DC(w)_CU
WATER_MS(w)_CU
WATER_BA(w)_CU
WATER_RF(w)_CU
WATER_VGS(w)_CU
SEDIMENT_AQ(s)_CN(-1)
SEDIMENT_BA(i)_CN(-1)
SEDIMENT_VGS(i)_CN(-1)
SOIL_AK(fi)_CN(-1)
SOIL_AK(f)_CN(-1)
SOIL_AR(p)_CN(-1)
SOIL_AR(i)_CN(-1)
SOIL_AR(ip)_CN(-1)
SOIL_DM(ip)_CN(-1)
SOIL_DC(p)_CN(-1)
SOIL_MS(i)_CN(-1)
SOIL_RF(f)_CN(-1)
WATER_AK(w)_CN(-1)
WATER_AR(w)_CN(-1)
WATER_AQ(w)_CN(-1)
WATER_DM(w)_CN(-1)
WATER_DC(w)_CN(-1)
WATER_MS(w)_CN(-1)
WATER_BA(w)_CN(-1)
WATER_RF(w)_CN(-1)
WATER_VGS(w)_CN(-1)
SEDIMENT_BA(i)_F(-1)
SEDIMENT_VGS(i)_F(-1)
SOIL_AK(fi)_F(-1)
SOIL_AK(f)_F(-1)
SOIL_AR(p)_F(-1)
SOIL_AR(i)_F(-1)
SOIL_AR(ip)_F(-1)

SOIL_DM(ip)_F(-1)
SOIL_DC(p)_F(-1)
SOIL_MS(i)_F(-1)
SOIL_RF(f)_F(-1)
WATER_AK(w)_F(-1)
WATER_AR(w)_F(-1)
WATER_AQ(w)_F(-1)
WATER_DM(w)_F(-1)
WATER_DC(w)_F(-1)
WATER_MS(w)_F(-1)
WATER_BA(w)_F(-1)
WATER_RF(w)_F(-1)
WATER_VGS(w)_F(-1)
SEDIMENT_AQ(s)_FE
WATER_AQ(w)_FE
SEDIMENT_AQ(s)_PB
SEDIMENT_BA(i)_PB
SEDIMENT_VGS(i)_PB
SOIL_AK(fi)_PB
SOIL_AK(f)_PB
SOIL_AR(p)_PB
SOIL_AR(i)_PB
SOIL_AR(ip)_PB
SOIL_DM(ip)_PB
SOIL_DC(p)_PB
SOIL_EW_PB
SOIL_GP_PB
SOIL_MS(i)_PB
SOIL_RF(f)_PB
WATER_AK(w)_PB
WATER_AR(w)_PB
WATER_AQ(w)_PB
WATER_DM(w)_PB
WATER_DC(w)_PB
WATER_MS(w)_PB
WATER_BA(w)_PB
WATER_RF(w)_PB
WATER_VGS(w)_PB
SEDIMENT_BA(i)_LI
SOIL_DM(ip)_LI
SOIL_DC(p)_LI
SOIL_MS(i)_LI
SOIL_RF(f)_LI
SEDIMENT_AQ(s)_MN
SEDIMENT_BA(i)_MN
SEDIMENT_VGS(i)_MN
SOIL_AK(fi)_MN

SOIL_AK(f)_MN
SOIL_AR(p)_MN
SOIL_AR(i)_MN
SOIL_AR(ip)_MN
SOIL_DM(ip)_MN
SOIL_DC(p)_MN
SOIL_EW_MN
SOIL_GP_MN
SOIL_MS(i)_MN
SOIL_RF(f)_MN
WATER_AK(w)_MN
WATER_AR(w)_MN
WATER_AQ(w)_MN
WATER_DM(w)_MN
WATER_DC(w)_MN
WATER_MS(w)_MN
WATER_BA(w)_MN
WATER_RF(w)_MN
WATER_VGS(w)_MN
SEDIMENT_AQ(s)_HGI
SEDIMENT_BA(i)_HGI
SEDIMENT_VGS(i)_HGI
SOIL_AK(fi)_HGI
SOIL_AK(f)_HGI
SOIL_AR(p)_HGI
SOIL_AR(i)_HGI
SOIL_AR(ip)_HGI
SOIL_DM(ip)_HGI
SOIL_DC(p)_HGI
SOIL_EW_HGI
SOIL_GP_HGI
SOIL_MS(i)_HGI
SOIL_RF(f)_HGI
WATER_AK(w)_HGI
WATER_AR(w)_HGI
WATER_AQ(w)_HGI
WATER_DM(w)_HGI
WATER_DC(w)_HGI
WATER_MS(w)_HGI
WATER_BA(w)_HGI
WATER_RF(w)_HGI
WATER_VGS(w)_HGI
SEDIMENT_BA(i)_HGM
SEDIMENT_VGS(i)_HGM
SOIL_AK(fi)_HGM
SOIL_AK(f)_HGM
SOIL_AR(p)_HGM

SOIL_AR(i)_HGM
SOIL_AR(ip)_HGM
SOIL_DM(ip)_HGM
SOIL_DC(p)_HGM
SOIL_EW_HGM
SOIL_MS(i)_HGM
SOIL_RF(f)_HGM
WATER_AK(w)_HGM
WATER_AR(w)_HGM
WATER_AQ(w)_HGM
WATER_DM(w)_HGM
WATER_DC(w)_HGM
WATER_MS(w)_HGM
WATER_BA(w)_HGM
WATER_RF(w)_HGM
WATER_VGS(w)_HGM
SEDIMENT_VGS(i)_MO
SOIL_AK(fi)_MO
SOIL_AK(f)_MO
SOIL_AR(p)_MO
SOIL_AR(i)_MO
SOIL_AR(ip)_MO
WATER_AQ(w)_MO
SEDIMENT_AQ(s)_NI
SEDIMENT_BA(i)_NI
SEDIMENT_VGS(i)_NI
SOIL_AK(fi)_NI
SOIL_AK(f)_NI
SOIL_AR(p)_NI
SOIL_AR(i)_NI
SOIL_AR(ip)_NI
SOIL_DM(ip)_NI
SOIL_DC(p)_NI
SOIL_EW_NI
SOIL_GP_NI
SOIL_MS(i)_NI
SOIL_RF(f)_NI
WATER_AK(w)_NI
WATER_AR(w)_NI
WATER_AQ(w)_NI
WATER_DM(w)_NI
WATER_DC(w)_NI
WATER_MS(w)_NI
WATER_BA(w)_NI
WATER_RF(w)_NI
WATER_VGS(w)_NI
WATER_AK(w)_ClO4(-1)

WATER_AR(w)_ClO4(-1)
WATER_DM(w)_ClO4(-1)
WATER_DC(w)_ClO4(-1)
WATER_MS(w)_ClO4(-1)
WATER_BA(w)_ClO4(-1)
WATER_RF(w)_ClO4(-1)
WATER_VGS(w)_ClO4(-1)
SEDIMENT_AQ(s)_SE
SEDIMENT_BA(i)_SE
SEDIMENT_VGS(i)_SE
SOIL_AK(fi)_SE
SOIL_AK(f)_SE
SOIL_AR(p)_SE
SOIL_AR(i)_SE
SOIL_AR(ip)_SE
SOIL_DM(ip)_SE
SOIL_DC(p)_SE
SOIL_EW_SE
SOIL_GP_SE
SOIL_MS(i)_SE
SOIL_RF(f)_SE
WATER_AK(w)_SE
WATER_AR(w)_SE
WATER_AQ(w)_SE
WATER_DM(w)_SE
WATER_DC(w)_SE
WATER_MS(w)_SE
WATER_BA(w)_SE
WATER_RF(w)_SE
WATER_VGS(w)_SE
SEDIMENT_AQ(s)_AG
SEDIMENT_BA(i)_AG
SEDIMENT_VGS(i)_AG
SOIL_AK(fi)_AG
SOIL_AK(f)_AG
SOIL_AR(p)_AG
SOIL_AR(i)_AG
SOIL_AR(ip)_AG
SOIL_DM(ip)_AG
SOIL_DC(p)_AG
SOIL_GP_AG
SOIL_MS(i)_AG
SOIL_RF(f)_AG
WATER_AK(w)_AG
WATER_AR(w)_AG
WATER_AQ(w)_AG
WATER_DM(w)_AG

WATER_DC(w)_AG
WATER_MS(w)_AG
WATER_BA(w)_AG
WATER_RF(w)_AG
WATER_VGS(w)_AG
SEDIMENT_BA(i)_SR
SOIL_DM(ip)_SR
SOIL_DC(p)_SR
SOIL_MS(i)_SR
SOIL_RF(f)_SR
WATER_AQ(w)_SR
WATER_DM(w)_SR
WATER_DC(w)_SR
WATER_MS(w)_SR
WATER_BA(w)_SR
WATER_RF(w)_SR
SEDIMENT_BA(i)_TL
SEDIMENT_VGS(i)_TL
SOIL_AK(fi)_TL
SOIL_AK(f)_TL
SOIL_AR(p)_TL
SOIL_AR(i)_TL
SOIL_AR(ip)_TL
SOIL_DM(ip)_TL
SOIL_DC(p)_TL
SOIL_GP_TL
SOIL_MS(i)_TL
SOIL_RF(f)_TL
WATER_AK(w)_TL
WATER_AR(w)_TL
WATER_AQ(w)_TL
WATER_DM(w)_TL
WATER_DC(w)_TL
WATER_MS(w)_TL
WATER_BA(w)_TL
WATER_RF(w)_TL
WATER_VGS(w)_TL
SEDIMENT_BA(i)_TI
SOIL_DM(ip)_TI
SOIL_DC(p)_TI
SOIL_MS(i)_TI
SOIL_RF(f)_TI
WATER_DM(w)_TI
WATER_DC(w)_TI
WATER_MS(w)_TI
WATER_BA(w)_TI
WATER_RF(w)_TI

SEDIMENT_AQ(s)_U
SEDIMENT_BA(i)_U
SEDIMENT_VGS(i)_U
SOIL_AK(fi)_U
SOIL_AK(f)_U
SOIL_AR(p)_U
SOIL_AR(i)_U
SOIL_AR(ip)_U
SOIL_DM(ip)_U
SOIL_DC(p)_U
SOIL_GP_U
SOIL_MS(i)_U
SOIL_RF(f)_U
WATER_AK(w)_U
WATER_AR(w)_U
WATER_AQ(w)_U
WATER_DM(w)_U
WATER_DC(w)_U
WATER_MS(w)_U
WATER_BA(w)_U
WATER_RF(w)_U
WATER_VGS(w)_U
SEDIMENT_BA(i)_V
SEDIMENT_VGS(i)_V
SOIL_AK(fi)_V
SOIL_AK(f)_V
SOIL_AR(p)_V
SOIL_AR(i)_V
SOIL_AR(ip)_V
SOIL_DM(ip)_V
SOIL_DC(p)_V
SOIL_GP_V
SOIL_MS(i)_V
SOIL_RF(f)_V
WATER_AK(w)_V
WATER_AR(w)_V
WATER_AQ(w)_V
WATER_DM(w)_V
WATER_DC(w)_V
WATER_MS(w)_V
WATER_BA(w)_V
WATER_RF(w)_V
WATER_VGS(w)_V
SEDIMENT_AQ(s)_ZN
SEDIMENT_BA(i)_ZN
SEDIMENT_VGS(i)_ZN
SOIL_AK(fi)_ZN

SOIL_AK(f)_ZN
SOIL_AR(p)_ZN
SOIL_AR(i)_ZN
SOIL_AR(ip)_ZN
SOIL_DM(ip)_ZN
SOIL_DC(p)_ZN
SOIL_EW_ZN
SOIL_GP_ZN
SOIL_MS(i)_ZN
SOIL_RF(f)_ZN
WATER_AK(w)_ZN
WATER_AR(w)_ZN
WATER_AQ(w)_ZN
WATER_DM(w)_ZN
WATER_DC(w)_ZN
WATER_MS(w)_ZN
WATER_BA(w)_ZN
WATER_RF(w)_ZN
WATER_VGS(w)_ZN
SEDIMENT_BA(i)_309-00-2
SOIL_DM(ip)_309-00-2
SOIL_DC(p)_309-00-2
SOIL_MS(i)_309-00-2
SOIL_RF(f)_309-00-2
SEDIMENT_BA(i)_319-84-6
SOIL_DM(ip)_319-84-6
SOIL_DC(p)_319-84-6
SOIL_MS(i)_319-84-6
SOIL_RF(f)_319-84-6
SEDIMENT_AQ(s)_319-85-7
SEDIMENT_BA(i)_319-85-7
SEDIMENT_VGS(i)_319-85-7
SOIL_AK(fi)_319-85-7
SOIL_AK(f)_319-85-7
SOIL_AR(p)_319-85-7
SOIL_AR(i)_319-85-7
SOIL_AR(ip)_319-85-7
SOIL_DM(ip)_319-85-7
SOIL_DC(p)_319-85-7
SOIL_MS(i)_319-85-7
SOIL_RF(f)_319-85-7
WATER_AK(w)_319-85-7
WATER_AR(w)_319-85-7
WATER_AQ(w)_319-85-7
WATER_DM(w)_319-85-7
WATER_DC(w)_319-85-7
WATER_MS(w)_319-85-7

WATER_BA(w)_319-85-7
WATER_RF(w)_319-85-7
WATER_VGS(w)_319-85-7
SEDIMENT_AQ(s)_58-89-9
SEDIMENT_BA(i)_58-89-9
SEDIMENT_VGS(i)_58-89-9
SOIL_AK(fi)_58-89-9
SOIL_AK(f)_58-89-9
SOIL_AR(p)_58-89-9
SOIL_AR(i)_58-89-9
SOIL_AR(ip)_58-89-9
SOIL_DM(ip)_58-89-9
SOIL_DC(p)_58-89-9
SOIL_GP_58-89-9
SOIL_MS(i)_58-89-9
SOIL_RF(f)_58-89-9
WATER_AK(w)_58-89-9
WATER_AR(w)_58-89-9
WATER_AQ(w)_58-89-9
WATER_DM(w)_58-89-9
WATER_DC(w)_58-89-9
WATER_MS(w)_58-89-9
WATER_BA(w)_58-89-9
WATER_RF(w)_58-89-9
WATER_VGS(w)_58-89-9
SEDIMENT_AQ(s)_5103-71-9
SEDIMENT_BA(i)_5103-71-9
SEDIMENT_VGS(i)_5103-71-9
SOIL_AK(fi)_5103-71-9
SOIL_AK(f)_5103-71-9
SOIL_AR(p)_5103-71-9
SOIL_AR(i)_5103-71-9
SOIL_AR(ip)_5103-71-9
SOIL_DM(ip)_5103-71-9
SOIL_DC(p)_5103-71-9
SOIL_GP_5103-71-9
SOIL_MS(i)_5103-71-9
SOIL_RF(f)_5103-71-9
WATER_AK(w)_5103-71-9
WATER_AR(w)_5103-71-9
WATER_AQ(w)_5103-71-9
WATER_DM(w)_5103-71-9
WATER_DC(w)_5103-71-9
WATER_MS(w)_5103-71-9
WATER_BA(w)_5103-71-9
WATER_RF(w)_5103-71-9
WATER_VGS(w)_5103-71-9

SEDIMENT_AQ(s)_5103-74-2
SEDIMENT_BA(i)_5103-74-2
SEDIMENT_VGS(i)_5103-74-2
SOIL_AK(fi)_5103-74-2
SOIL_AK(f)_5103-74-2
SOIL_AR(p)_5103-74-2
SOIL_AR(i)_5103-74-2
SOIL_AR(ip)_5103-74-2
SOIL_DM(ip)_5103-74-2
SOIL_DC(p)_5103-74-2
SOIL_GP_5103-74-2
SOIL_MS(i)_5103-74-2
SOIL_RF(f)_5103-74-2
WATER_AK(w)_5103-74-2
WATER_AR(w)_5103-74-2
WATER_AQ(w)_5103-74-2
WATER_DM(w)_5103-74-2
WATER_DC(w)_5103-74-2
WATER_MS(w)_5103-74-2
WATER_BA(w)_5103-74-2
WATER_RF(w)_5103-74-2
WATER_VGS(w)_5103-74-2
SEDIMENT_BA(i)_72-54-8
SEDIMENT_VGS(i)_72-54-8
SOIL_AK(fi)_72-54-8
SOIL_AK(f)_72-54-8
SOIL_AR(p)_72-54-8
SOIL_AR(i)_72-54-8
SOIL_AR(ip)_72-54-8
SOIL_DM(ip)_72-54-8
SOIL_DC(p)_72-54-8
SOIL_MS(i)_72-54-8
SOIL_RF(f)_72-54-8
SEDIMENT_AQ(s)_72-55-9
SEDIMENT_BA(i)_72-55-9
SEDIMENT_VGS(i)_72-55-9
SOIL_AK(fi)_72-55-9
SOIL_AK(f)_72-55-9
SOIL_AR(p)_72-55-9
SOIL_AR(i)_72-55-9
SOIL_AR(ip)_72-55-9
SOIL_DM(ip)_72-55-9
SOIL_DC(p)_72-55-9
SOIL_MS(i)_72-55-9
SOIL_RF(f)_72-55-9
WATER_AK(w)_72-55-9
WATER_AR(w)_72-55-9

WATER_AQ(w)_72-55-9
WATER_DM(w)_72-55-9
WATER_DC(w)_72-55-9
WATER_MS(w)_72-55-9
WATER_BA(w)_72-55-9
WATER_RF(w)_72-55-9
WATER_VGS(w)_72-55-9
SEDIMENT_AQ(s)_50-29-3
SEDIMENT_BA(i)_50-29-3
SEDIMENT_VGS(i)_50-29-3
SOIL_AK(fi)_50-29-3
SOIL_AK(f)_50-29-3
SOIL_AR(p)_50-29-3
SOIL_AR(i)_50-29-3
SOIL_AR(ip)_50-29-3
SOIL_DM(ip)_50-29-3
SOIL_DC(p)_50-29-3
SOIL_GP_50-29-3
SOIL_MS(i)_50-29-3
SOIL_RF(f)_50-29-3
WATER_AK(w)_50-29-3
WATER_AR(w)_50-29-3
WATER_AQ(w)_50-29-3
WATER_DM(w)_50-29-3
WATER_DC(w)_50-29-3
WATER_MS(w)_50-29-3
WATER_BA(w)_50-29-3
WATER_RF(w)_50-29-3
WATER_VGS(w)_50-29-3
SEDIMENT_AQ(s)_60-57-1
SEDIMENT_BA(i)_60-57-1
SEDIMENT_VGS(i)_60-57-1
SOIL_AK(fi)_60-57-1
SOIL_AK(f)_60-57-1
SOIL_AR(p)_60-57-1
SOIL_AR(i)_60-57-1
SOIL_AR(ip)_60-57-1
SOIL_DM(ip)_60-57-1
SOIL_DC(p)_60-57-1
SOIL_GP_60-57-1
SOIL_MS(i)_60-57-1
SOIL_RF(f)_60-57-1
WATER_AK(w)_60-57-1
WATER_AR(w)_60-57-1
WATER_AQ(w)_60-57-1
WATER_DM(w)_60-57-1
WATER_DC(w)_60-57-1

WATER_MS(w)_60-57-1
WATER_BA(w)_60-57-1
WATER_RF(w)_60-57-1
WATER_VGS(w)_60-57-1
SEDIMENT_AQ(s)_115-29-7
SEDIMENT_BA(i)_115-29-7
SEDIMENT_VGS(i)_115-29-7
SOIL_AK(fi)_115-29-7
SOIL_AK(f)_115-29-7
SOIL_AR(p)_115-29-7
SOIL_AR(i)_115-29-7
SOIL_AR(ip)_115-29-7
SOIL_DM(ip)_115-29-7
SOIL_DC(p)_115-29-7
SOIL_MS(i)_115-29-7
SOIL_RF(f)_115-29-7
WATER_AK(w)_115-29-7
WATER_AR(w)_115-29-7
WATER_AQ(w)_115-29-7
WATER_DM(w)_115-29-7
WATER_DC(w)_115-29-7
WATER_MS(w)_115-29-7
WATER_BA(w)_115-29-7
WATER_RF(w)_115-29-7
WATER_VGS(w)_115-29-7
SEDIMENT_AQ(s)_72-20-8
SEDIMENT_BA(i)_72-20-8
SEDIMENT_VGS(i)_72-20-8
SOIL_AK(fi)_72-20-8
SOIL_AK(f)_72-20-8
SOIL_AR(p)_72-20-8
SOIL_AR(i)_72-20-8
SOIL_AR(ip)_72-20-8
SOIL_DM(ip)_72-20-8
SOIL_DC(p)_72-20-8
SOIL_GP_72-20-8
SOIL_MS(i)_72-20-8
SOIL_RF(f)_72-20-8
WATER_AK(w)_72-20-8
WATER_AR(w)_72-20-8
WATER_AQ(w)_72-20-8
WATER_DM(w)_72-20-8
WATER_DC(w)_72-20-8
WATER_MS(w)_72-20-8
WATER_BA(w)_72-20-8
WATER_RF(w)_72-20-8
WATER_VGS(w)_72-20-8

SEDIMENT_AQ(s)_76-44-8
SEDIMENT_BA(i)_76-44-8
SEDIMENT_VGS(i)_76-44-8
SOIL_AK(fi)_76-44-8
SOIL_AK(f)_76-44-8
SOIL_AR(p)_76-44-8
SOIL_AR(i)_76-44-8
SOIL_AR(ip)_76-44-8
SOIL_DM(ip)_76-44-8
SOIL_DC(p)_76-44-8
SOIL_GP_76-44-8
SOIL_MS(i)_76-44-8
SOIL_RF(f)_76-44-8
WATER_AK(w)_76-44-8
WATER_AR(w)_76-44-8
WATER_AQ(w)_76-44-8
WATER_DM(w)_76-44-8
WATER_DC(w)_76-44-8
WATER_MS(w)_76-44-8
WATER_BA(w)_76-44-8
WATER_RF(w)_76-44-8
WATER_VGS(w)_76-44-8
SEDIMENT_BA(i)_143-50-0
SEDIMENT_VGS(i)_143-50-0
SOIL_AK(fi)_143-50-0
SOIL_AK(f)_143-50-0
SOIL_AR(p)_143-50-0
SOIL_AR(i)_143-50-0
SOIL_AR(ip)_143-50-0
SOIL_DM(ip)_143-50-0
SOIL_DC(p)_143-50-0
SOIL_MS(i)_143-50-0
SOIL_RF(f)_143-50-0
WATER_AK(w)_143-50-0
WATER_AR(w)_143-50-0
WATER_DM(w)_143-50-0
WATER_DC(w)_143-50-0
WATER_MS(w)_143-50-0
WATER_BA(w)_143-50-0
WATER_RF(w)_143-50-0
WATER_VGS(w)_143-50-0
SEDIMENT_AQ(s)_72-43-5
SEDIMENT_BA(i)_72-43-5
SEDIMENT_VGS(i)_72-43-5
SOIL_AK(fi)_72-43-5
SOIL_AK(f)_72-43-5
SOIL_AR(p)_72-43-5

SOIL_AR(i)_72-43-5
SOIL_AR(ip)_72-43-5
SOIL_DM(ip)_72-43-5
SOIL_DC(p)_72-43-5
SOIL_MS(i)_72-43-5
SOIL_RF(f)_72-43-5
WATER_AK(w)_72-43-5
WATER_AR(w)_72-43-5
WATER_AQ(w)_72-43-5
WATER_DM(w)_72-43-5
WATER_DC(w)_72-43-5
WATER_MS(w)_72-43-5
WATER_BA(w)_72-43-5
WATER_RF(w)_72-43-5
WATER_VGS(w)_72-43-5
SEDIMENT_AQ(s)_8001-35-2
SEDIMENT_BA(i)_8001-35-2
SEDIMENT_VGS(i)_8001-35-2
SOIL_AK(fi)_8001-35-2
SOIL_AK(f)_8001-35-2
SOIL_AR(p)_8001-35-2
SOIL_AR(i)_8001-35-2
SOIL_AR(ip)_8001-35-2
SOIL_DM(ip)_8001-35-2
SOIL_DC(p)_8001-35-2
SOIL_MS(i)_8001-35-2
SOIL_RF(f)_8001-35-2
WATER_AK(w)_8001-35-2
WATER_AR(w)_8001-35-2
WATER_AQ(w)_8001-35-2
WATER_DM(w)_8001-35-2
WATER_DC(w)_8001-35-2
WATER_MS(w)_8001-35-2
WATER_BA(w)_8001-35-2
WATER_RF(w)_8001-35-2
WATER_VGS(w)_8001-35-2
SEDIMENT_AQ(s)_83-32-9
SEDIMENT_BA(i)_83-32-9
SOIL_DM(ip)_83-32-9
SOIL_DC(p)_83-32-9
SOIL_GP_83-32-9
SOIL_MS(i)_83-32-9
SOIL_RF(f)_83-32-9
WATER_AQ(w)_83-32-9
WATER_DM(w)_83-32-9
WATER_DC(w)_83-32-9
WATER_MS(w)_83-32-9

WATER_BA(w)_83-32-9
WATER_RF(w)_83-32-9
SEDIMENT_AQ(s)_208-96-8
SEDIMENT_BA(i)_208-96-8
SOIL_DM(ip)_208-96-8
SOIL_DC(p)_208-96-8
SOIL_MS(i)_208-96-8
SOIL_RF(f)_208-96-8
WATER_AQ(w)_208-96-8
WATER_DM(w)_208-96-8
WATER_DC(w)_208-96-8
WATER_MS(w)_208-96-8
WATER_BA(w)_208-96-8
WATER_RF(w)_208-96-8
SEDIMENT_AQ(s)_120-12-7
SEDIMENT_BA(i)_120-12-7
SOIL_DM(ip)_120-12-7
SOIL_DC(p)_120-12-7
SOIL_GP_120-12-7
SOIL_MS(i)_120-12-7
SOIL_RF(f)_120-12-7
WATER_AQ(w)_120-12-7
WATER_DM(w)_120-12-7
WATER_DC(w)_120-12-7
WATER_MS(w)_120-12-7
WATER_BA(w)_120-12-7
WATER_RF(w)_120-12-7
SEDIMENT_AQ(s)_56-55-3
SEDIMENT_BA(i)_56-55-3
SEDIMENT_VGS(i)_56-55-3
SOIL_AK(fi)_56-55-3
SOIL_AK(f)_56-55-3
SOIL_AR(p)_56-55-3
SOIL_AR(i)_56-55-3
SOIL_AR(ip)_56-55-3
SOIL_DM(ip)_56-55-3
SOIL_DC(p)_56-55-3
SOIL_GP_56-55-3
SOIL_MS(i)_56-55-3
SOIL_RF(f)_56-55-3
WATER_AQ(w)_56-55-3
WATER_DM(w)_56-55-3
WATER_DC(w)_56-55-3
WATER_MS(w)_56-55-3
WATER_BA(w)_56-55-3
WATER_RF(w)_56-55-3
SEDIMENT_AQ(s)_50-32-8

SEDIMENT_BA(i)_50-32-8
SOIL_DM(ip)_50-32-8
SOIL_DC(p)_50-32-8
SOIL_MS(i)_50-32-8
SOIL_RF(f)_50-32-8
WATER_AQ(w)_50-32-8
WATER_DM(w)_50-32-8
WATER_DC(w)_50-32-8
WATER_MS(w)_50-32-8
WATER_BA(w)_50-32-8
WATER_RF(w)_50-32-8
SEDIMENT_AQ(s)_205-99-2
SEDIMENT_BA(i)_205-99-2
SOIL_DM(ip)_205-99-2
SOIL_DC(p)_205-99-2
SOIL_GP_205-99-2
SOIL_MS(i)_205-99-2
SOIL_RF(f)_205-99-2
WATER_AQ(w)_205-99-2
WATER_DM(w)_205-99-2
WATER_DC(w)_205-99-2
WATER_MS(w)_205-99-2
WATER_BA(w)_205-99-2
WATER_RF(w)_205-99-2
SEDIMENT_AQ(s)_191-24-2
SEDIMENT_BA(i)_191-24-2
SOIL_DM(ip)_191-24-2
SOIL_DC(p)_191-24-2
SOIL_MS(i)_191-24-2
SOIL_RF(f)_191-24-2
WATER_AQ(w)_191-24-2
WATER_DM(w)_191-24-2
WATER_DC(w)_191-24-2
WATER_MS(w)_191-24-2
WATER_BA(w)_191-24-2
WATER_RF(w)_191-24-2
SEDIMENT_AQ(s)_207-08-9
SEDIMENT_BA(i)_207-08-9
SOIL_DM(ip)_207-08-9
SOIL_DC(p)_207-08-9
SOIL_MS(i)_207-08-9
SOIL_RF(f)_207-08-9
WATER_AQ(w)_207-08-9
WATER_DM(w)_207-08-9
WATER_DC(w)_207-08-9
WATER_MS(w)_207-08-9
WATER_BA(w)_207-08-9

WATER_RF(w)_207-08-9
SEDIMENT_AQ(s)_218-01-9
SEDIMENT_BA(i)_218-01-9
SOIL_DM(ip)_218-01-9
SOIL_DC(p)_218-01-9
SOIL_MS(i)_218-01-9
SOIL_RF(f)_218-01-9
WATER_AQ(w)_218-01-9
WATER_DM(w)_218-01-9
WATER_DC(w)_218-01-9
WATER_MS(w)_218-01-9
WATER_BA(w)_218-01-9
WATER_RF(w)_218-01-9
SEDIMENT_AQ(s)_53-70-3
SEDIMENT_BA(i)_53-70-3
SOIL_DM(ip)_53-70-3
SOIL_DC(p)_53-70-3
SOIL_MS(i)_53-70-3
SOIL_RF(f)_53-70-3
WATER_AQ(w)_53-70-3
WATER_DM(w)_53-70-3
WATER_DC(w)_53-70-3
WATER_MS(w)_53-70-3
WATER_BA(w)_53-70-3
WATER_RF(w)_53-70-3
SEDIMENT_AQ(s)_206-44-0
SEDIMENT_BA(i)_206-44-0
SOIL_DM(ip)_206-44-0
SOIL_DC(p)_206-44-0
SOIL_EW_206-44-0
SOIL_MS(i)_206-44-0
SOIL_RF(f)_206-44-0
WATER_AQ(w)_206-44-0
WATER_DM(w)_206-44-0
WATER_DC(w)_206-44-0
WATER_MS(w)_206-44-0
WATER_BA(w)_206-44-0
WATER_RF(w)_206-44-0
SEDIMENT_AQ(s)_86-73-7
SEDIMENT_BA(i)_86-73-7
SOIL_DM(ip)_86-73-7
SOIL_DC(p)_86-73-7
SOIL_EW_86-73-7
SOIL_MS(i)_86-73-7
SOIL_RF(f)_86-73-7
WATER_AQ(w)_86-73-7
WATER_DM(w)_86-73-7

WATER_DC(w)_86-73-7
WATER_MS(w)_86-73-7
WATER_BA(w)_86-73-7
WATER_RF(w)_86-73-7
SEDIMENT_AQ(s)_193-39-5
SEDIMENT_BA(i)_193-39-5
SOIL_DM(ip)_193-39-5
SOIL_DC(p)_193-39-5
SOIL_MS(i)_193-39-5
SOIL_RF(f)_193-39-5
WATER_AQ(w)_193-39-5
WATER_DM(w)_193-39-5
WATER_DC(w)_193-39-5
WATER_MS(w)_193-39-5
WATER_BA(w)_193-39-5
WATER_RF(w)_193-39-5
SEDIMENT_AQ(s)_91-57-6
SEDIMENT_BA(i)_91-57-6
SOIL_DM(ip)_91-57-6
SOIL_DC(p)_91-57-6
SOIL_MS(i)_91-57-6
SOIL_RF(f)_91-57-6
WATER_AQ(w)_91-57-6
WATER_DM(w)_91-57-6
WATER_DC(w)_91-57-6
WATER_MS(w)_91-57-6
WATER_BA(w)_91-57-6
WATER_RF(w)_91-57-6
SEDIMENT_AQ(s)_91-20-3
SEDIMENT_BA(i)_91-20-3
SEDIMENT_VGS(i)_91-20-3
SOIL_AK(fi)_91-20-3
SOIL_AK(f)_91-20-3
SOIL_AR(p)_91-20-3
SOIL_AR(i)_91-20-3
SOIL_AR(ip)_91-20-3
SOIL_DM(ip)_91-20-3
SOIL_DC(p)_91-20-3
SOIL_GP_91-20-3
SOIL_MS(i)_91-20-3
SOIL_RF(f)_91-20-3
WATER_AK(w)_91-20-3
WATER_AR(w)_91-20-3
WATER_AQ(w)_91-20-3
WATER_DM(w)_91-20-3
WATER_DC(w)_91-20-3
WATER_MS(w)_91-20-3

WATER_BA(w)_91-20-3
WATER_RF(w)_91-20-3
WATER_VGS(w)_91-20-3
SEDIMENT_AQ(s)_85-01-8
SEDIMENT_BA(i)_85-01-8
SOIL_DM(ip)_85-01-8
SOIL_DC(p)_85-01-8
SOIL_EW_85-01-8
SOIL_MS(i)_85-01-8
SOIL_RF(f)_85-01-8
WATER_AQ(w)_85-01-8
WATER_DM(w)_85-01-8
WATER_DC(w)_85-01-8
WATER_MS(w)_85-01-8
WATER_BA(w)_85-01-8
WATER_RF(w)_85-01-8
SEDIMENT_AQ(s)_129-00-0
SEDIMENT_BA(i)_129-00-0
SEDIMENT_VGS(i)_129-00-0
SOIL_AK(fi)_129-00-0
SOIL_AK(f)_129-00-0
SOIL_AR(p)_129-00-0
SOIL_AR(i)_129-00-0
SOIL_AR(ip)_129-00-0
SOIL_DM(ip)_129-00-0
SOIL_DC(p)_129-00-0
SOIL_EW_129-00-0
SOIL_MS(i)_129-00-0
SOIL_RF(f)_129-00-0
WATER_AQ(w)_129-00-0
WATER_DM(w)_129-00-0
WATER_DC(w)_129-00-0
WATER_MS(w)_129-00-0
WATER_BA(w)_129-00-0
WATER_RF(w)_129-00-0
SEDIMENT_AQ(s)_12674-11-2
SEDIMENT_BA(i)_12674-11-2
SOIL_DM(ip)_12674-11-2
SOIL_DC(p)_12674-11-2
SOIL_MS(i)_12674-11-2
SOIL_RF(f)_12674-11-2
WATER_AQ(w)_12674-11-2
WATER_DM(w)_12674-11-2
WATER_DC(w)_12674-11-2
WATER_MS(w)_12674-11-2
WATER_BA(w)_12674-11-2
WATER_RF(w)_12674-11-2

SEDIMENT_AQ(s)_53469-21-9
SEDIMENT_BA(i)_53469-21-9
SEDIMENT_VGS(i)_53469-21-9
SOIL_AK(fi)_53469-21-9
SOIL_AK(f)_53469-21-9
SOIL_AR(p)_53469-21-9
SOIL_AR(i)_53469-21-9
SOIL_AR(ip)_53469-21-9
SOIL_DM(ip)_53469-21-9
SOIL_DC(p)_53469-21-9
SOIL_MS(i)_53469-21-9
SOIL_RF(f)_53469-21-9
WATER_AK(w)_53469-21-9
WATER_AR(w)_53469-21-9
WATER_AQ(w)_53469-21-9
WATER_DM(w)_53469-21-9
WATER_DC(w)_53469-21-9
WATER_MS(w)_53469-21-9
WATER_BA(w)_53469-21-9
WATER_RF(w)_53469-21-9
WATER_VGS(w)_53469-21-9
SEDIMENT_AQ(s)_12672-29-6
SEDIMENT_BA(i)_12672-29-6
SEDIMENT_VGS(i)_12672-29-6
SOIL_AK(fi)_12672-29-6
SOIL_AK(f)_12672-29-6
SOIL_AR(p)_12672-29-6
SOIL_AR(i)_12672-29-6
SOIL_AR(ip)_12672-29-6
SOIL_DM(ip)_12672-29-6
SOIL_DC(p)_12672-29-6
SOIL_MS(i)_12672-29-6
SOIL_RF(f)_12672-29-6
WATER_AK(w)_12672-29-6
WATER_AR(w)_12672-29-6
WATER_AQ(w)_12672-29-6
WATER_DM(w)_12672-29-6
WATER_DC(w)_12672-29-6
WATER_MS(w)_12672-29-6
WATER_BA(w)_12672-29-6
WATER_RF(w)_12672-29-6
WATER_VGS(w)_12672-29-6
SEDIMENT_AQ(s)_11097-69-1
SEDIMENT_BA(i)_11097-69-1
SEDIMENT_VGS(i)_11097-69-1
SOIL_AK(fi)_11097-69-1
SOIL_AK(f)_11097-69-1

SOIL_AR(p)_11097-69-1
SOIL_AR(i)_11097-69-1
SOIL_AR(ip)_11097-69-1
SOIL_DM(ip)_11097-69-1
SOIL_DC(p)_11097-69-1
SOIL_GP_11097-69-1
SOIL_MS(i)_11097-69-1
SOIL_RF(f)_11097-69-1
WATER_AK(w)_11097-69-1
WATER_AR(w)_11097-69-1
WATER_AQ(w)_11097-69-1
WATER_DM(w)_11097-69-1
WATER_DC(w)_11097-69-1
WATER_MS(w)_11097-69-1
WATER_BA(w)_11097-69-1
WATER_RF(w)_11097-69-1
WATER_VGS(w)_11097-69-1
SEDIMENT_AQ(s)_11096-82-5
SEDIMENT_BA(i)_11096-82-5
SEDIMENT_VGS(i)_11096-82-5
SOIL_AK(fi)_11096-82-5
SOIL_AK(f)_11096-82-5
SOIL_AR(p)_11096-82-5
SOIL_AR(i)_11096-82-5
SOIL_AR(ip)_11096-82-5
SOIL_DM(ip)_11096-82-5
SOIL_DC(p)_11096-82-5
SOIL_MS(i)_11096-82-5
SOIL_RF(f)_11096-82-5
WATER_AK(w)_11096-82-5
WATER_AR(w)_11096-82-5
WATER_AQ(w)_11096-82-5
WATER_DM(w)_11096-82-5
WATER_DC(w)_11096-82-5
WATER_MS(w)_11096-82-5
WATER_BA(w)_11096-82-5
WATER_RF(w)_11096-82-5
WATER_VGS(w)_11096-82-5
SEDIMENT_A(s)_AM-241
SEDIMENT_AS(s)_AM-241
SEDIMENT_D(s)_AM-241
SEDIMENT_GF(s)_AM-241
SEDIMENT_BA(i)_AM-241
SEDIMENT_VGS(i)_AM-241
SOIL_AK(fi)_AM-241
SOIL_AK(f)_AM-241
SOIL_AR(p)_AM-241

SOIL_AR(i)_AM-241
SOIL_AR(ip)_AM-241
SOIL_DM(ip)_AM-241
SOIL_DC(p)_AM-241
SOIL_EW_AM-241
SOIL_GP_AM-241
SOIL_MS(i)_AM-241
SOIL_RF(f)_AM-241
WATER_A(w)_AM-241
WATER_AK(w)_AM-241
WATER_AR(w)_AM-241
WATER_AS(w)_AM-241
WATER_D(w)_AM-241
WATER_DM(w)_AM-241
WATER_DC(w)_AM-241
WATER_GF(w)_AM-241
WATER_MS(w)_AM-241
WATER_BA(w)_AM-241
WATER_RF(w)_AM-241
WATER_VGS(w)_AM-241
SEDIMENT_A(s)_CS-134
SEDIMENT_AS(s)_CS-134
SEDIMENT_D(s)_CS-134
SEDIMENT_GF(s)_CS-134
SEDIMENT_BA(i)_CS-134
SEDIMENT_VGS(i)_CS-134
SOIL_AK(fi)_CS-134
SOIL_AK(f)_CS-134
SOIL_AR(p)_CS-134
SOIL_AR(i)_CS-134
SOIL_AR(ip)_CS-134
SOIL_DM(ip)_CS-134
SOIL_DC(p)_CS-134
SOIL_EW_CS-134
SOIL_GP_CS-134
SOIL_MS(i)_CS-134
SOIL_RF(f)_CS-134
WATER_A(w)_CS-134
WATER_AK(w)_CS-134
WATER_AR(w)_CS-134
WATER_AS(w)_CS-134
WATER_D(w)_CS-134
WATER_DM(w)_CS-134
WATER_DC(w)_CS-134
WATER_GF(w)_CS-134
WATER_MS(w)_CS-134
WATER_BA(w)_CS-134

WATER_RF(w)_CS-134
WATER_VGS(w)_CS-134
SEDIMENT_A(s)_CS-137/ BA-137
SEDIMENT_AS(s)_CS-137/ BA-137
SEDIMENT_D(s)_CS-137/ BA-137
SEDIMENT_GF(s)_CS-137/ BA-137
SEDIMENT_BA(i)_CS-137/ BA-137
SEDIMENT_VGS(i)_CS-137/ BA-137
SOIL_AK(fi)_CS-137/ BA-137
SOIL_AK(f)_CS-137/ BA-137
SOIL_AR(p)_CS-137/ BA-137
SOIL_AR(i)_CS-137/ BA-137
SOIL_AR(ip)_CS-137/ BA-137
SOIL_DM(ip)_CS-137/ BA-137
SOIL_DC(p)_CS-137/ BA-137
SOIL_EW_CS-137/ BA-137
SOIL_GP_CS-137/ BA-137
SOIL_MS(i)_CS-137/ BA-137
SOIL_RF(f)_CS-137/ BA-137
WATER_A(w)_CS-137/ BA-137
WATER_AK(w)_CS-137/ BA-137
WATER_AR(w)_CS-137/ BA-137
WATER_AS(w)_CS-137/ BA-137
WATER_D(w)_CS-137/ BA-137
WATER_DM(w)_CS-137/ BA-137
WATER_DC(w)_CS-137/ BA-137
WATER_GF(w)_CS-137/ BA-137
WATER_MS(w)_CS-137/ BA-137
WATER_BA(w)_CS-137/ BA-137
WATER_RF(w)_CS-137/ BA-137
WATER_VGS(w)_CS-137/ BA-137

SEDIMENT_A(s)_CO-60
SEDIMENT_AS(s)_CO-60
SEDIMENT_D(s)_CO-60
SEDIMENT_GF(s)_CO-60
SEDIMENT_BA(i)_CO-60
SEDIMENT_VGS(i)_CO-60
SOIL_AK(fi)_CO-60
SOIL_AK(f)_CO-60
SOIL_AR(p)_CO-60
SOIL_AR(i)_CO-60
SOIL_AR(ip)_CO-60
SOIL_DM(ip)_CO-60
SOIL_DC(p)_CO-60
SOIL_EW_CO-60
SOIL_GP_CO-60
SOIL_MS(i)_CO-60
SOIL_RF(f)_CO-60
WATER_A(w)_CO-60
WATER_AK(w)_CO-60
WATER_AR(w)_CO-60
WATER_AS(w)_CO-60
WATER_D(w)_CO-60
WATER_DM(w)_CO-60
WATER_DC(w)_CO-60
WATER_GF(w)_CO-60
WATER_MS(w)_CO-60
WATER_BA(w)_CO-60
WATER_RF(w)_CO-60
WATER_VGS(w)_CO-60
SEDIMENT_A(s)_EU-152
SEDIMENT_AS(s)_EU-152
SEDIMENT_D(s)_EU-152
SEDIMENT_GF(s)_EU-152
SEDIMENT_BA(i)_EU-152
SEDIMENT_VGS(i)_EU-152
SOIL_AK(fi)_EU-152
SOIL_AK(f)_EU-152
SOIL_AR(p)_EU-152
SOIL_AR(i)_EU-152
SOIL_AR(ip)_EU-152
SOIL_DM(ip)_EU-152
SOIL_DC(p)_EU-152
SOIL_EW_EU-152
SOIL_GP_EU-152
SOIL_MS(i)_EU-152
SOIL_RF(f)_EU-152
WATER_A(w)_EU-152

WATER_AK(w)_EU-152
WATER_AR(w)_EU-152
WATER_AS(w)_EU-152
WATER_D(w)_EU-152
WATER_DM(w)_EU-152
WATER_DC(w)_EU-152
WATER_GF(w)_EU-152
WATER_MS(w)_EU-152
WATER_BA(w)_EU-152
WATER_RF(w)_EU-152
WATER_VGS(w)_EU-152
SEDIMENT_A(s)_PB-210
SEDIMENT_AS(s)_PB-210
SEDIMENT_D(s)_PB-210
SEDIMENT_GF(s)_PB-210
SEDIMENT_BA(i)_PB-210
SEDIMENT_VGS(i)_PB-210
SOIL_AK(fi)_PB-210
SOIL_AK(f)_PB-210
SOIL_AR(p)_PB-210
SOIL_AR(i)_PB-210
SOIL_AR(ip)_PB-210
SOIL_DM(ip)_PB-210
SOIL_DC(p)_PB-210
SOIL_EW_PB-210
SOIL_GP_PB-210
SOIL_MS(i)_PB-210
SOIL_RF(f)_PB-210
WATER_A(w)_PB-210
WATER_AK(w)_PB-210
WATER_AR(w)_PB-210
WATER_AS(w)_PB-210
WATER_D(w)_PB-210
WATER_DM(w)_PB-210
WATER_DC(w)_PB-210
WATER_GF(w)_PB-210
WATER_MS(w)_PB-210
WATER_BA(w)_PB-210
WATER_RF(w)_PB-210
WATER_VGS(w)_PB-210
SEDIMENT_A(s)_NP-237
SEDIMENT_AS(s)_NP-237
SEDIMENT_D(s)_NP-237
SEDIMENT_GF(s)_NP-237
SEDIMENT_BA(i)_NP-237
SEDIMENT_VGS(i)_NP-237
SOIL_AK(fi)_NP-237

SOIL_AK(f)_NP-237
SOIL_AR(p)_NP-237
SOIL_AR(i)_NP-237
SOIL_AR(ip)_NP-237
SOIL_DM(ip)_NP-237
SOIL_DC(p)_NP-237
SOIL_EW_NP-237
SOIL_GP_NP-237
SOIL_MS(i)_NP-237
SOIL_RF(f)_NP-237
WATER_A(w)_NP-237
WATER_AK(w)_NP-237
WATER_AR(w)_NP-237
WATER_AS(w)_NP-237
WATER_D(w)_NP-237
WATER_DM(w)_NP-237
WATER_DC(w)_NP-237
WATER_GF(w)_NP-237
WATER_MS(w)_NP-237
WATER_BA(w)_NP-237
WATER_RF(w)_NP-237
WATER_VGS(w)_NP-237
SEDIMENT_A(s)_PU-238
SEDIMENT_AS(s)_PU-238
SEDIMENT_D(s)_PU-238
SEDIMENT_GF(s)_PU-238
SEDIMENT_BA(i)_PU-238
SEDIMENT_VGS(i)_PU-238
SOIL_AK(fi)_PU-238
SOIL_AK(f)_PU-238
SOIL_AR(p)_PU-238
SOIL_AR(i)_PU-238
SOIL_AR(ip)_PU-238
SOIL_DM(ip)_PU-238
SOIL_DC(p)_PU-238
SOIL_EW_PU-238
SOIL_GP_PU-238
SOIL_MS(i)_PU-238
SOIL_RF(f)_PU-238
WATER_A(w)_PU-238
WATER_AK(w)_PU-238
WATER_AR(w)_PU-238
WATER_AS(w)_PU-238
WATER_D(w)_PU-238
WATER_DM(w)_PU-238
WATER_DC(w)_PU-238
WATER_GF(w)_PU-238

WATER_MS(w)_PU-238
WATER_BA(w)_PU-238
WATER_RF(w)_PU-238
WATER_VGS(w)_PU-238
SEDIMENT_A(s)_PU-239/240
SEDIMENT_AS(s)_PU-239/240
SEDIMENT_D(s)_PU-239/240
SEDIMENT_GF(s)_PU-239/240
SEDIMENT_BA(i)_PU-239/240
SEDIMENT_VGS(i)_PU-239/240
SOIL_AK(fi)_PU-239/240
SOIL_AK(f)_PU-239/240
SOIL_AR(p)_PU-239/240
SOIL_AR(i)_PU-239/240
SOIL_AR(ip)_PU-239/240
SOIL_DM(ip)_PU-239/240
SOIL_DC(p)_PU-239/240
SOIL_EW_PU-239/240
SOIL_GP_PU-239/240
SOIL_MS(i)_PU-239/240
SOIL_RF(f)_PU-239/240
WATER_A(w)_PU-239/240
WATER_AK(w)_PU-239/240
WATER_AR(w)_PU-239/240
WATER_AS(w)_PU-239/240
WATER_D(w)_PU-239/240
WATER_DM(w)_PU-239/240
WATER_DC(w)_PU-239/240
WATER_GF(w)_PU-239/240
WATER_MS(w)_PU-239/240
WATER_BA(w)_PU-239/240
WATER_RF(w)_PU-239/240
WATER_VGS(w)_PU-239/240
SEDIMENT_A(s)_PU-241
SEDIMENT_AS(s)_PU-241
SEDIMENT_D(s)_PU-241
SEDIMENT_GF(s)_PU-241
SEDIMENT_BA(i)_PU-241
SEDIMENT_VGS(i)_PU-241
SOIL_AK(fi)_PU-241
SOIL_AK(f)_PU-241
SOIL_AR(p)_PU-241
SOIL_AR(i)_PU-241
SOIL_AR(ip)_PU-241
SOIL_DM(ip)_PU-241
SOIL_DC(p)_PU-241

SOIL_EW_PU-241
SOIL_GP_PU-241
SOIL_MS(i)_PU-241
SOIL_RF(f)_PU-241
WATER_A(w)_PU-241
WATER_AK(w)_PU-241
WATER_AR(w)_PU-241
WATER_AS(w)_PU-241
WATER_D(w)_PU-241
WATER_DM(w)_PU-241
WATER_DC(w)_PU-241
WATER_GF(w)_PU-241
WATER_MS(w)_PU-241
WATER_BA(w)_PU-241
WATER_RF(w)_PU-241
WATER_VGS(w)_PU-241
SEDIMENT_A(s)_RA-226
SEDIMENT_AS(s)_RA-226
SEDIMENT_D(s)_RA-226
SEDIMENT_GF(s)_RA-226
SEDIMENT_BA(i)_RA-226
SEDIMENT_VGS(i)_RA-226
SOIL_AK(fi)_RA-226
SOIL_AK(f)_RA-226
SOIL_AR(p)_RA-226
SOIL_AR(i)_RA-226
SOIL_AR(ip)_RA-226
SOIL_DM(ip)_RA-226
SOIL_DC(p)_RA-226
SOIL_EW_RA-226
SOIL_GP_RA-226
SOIL_MS(i)_RA-226
SOIL_RF(f)_RA-226
WATER_A(w)_RA-226
WATER_AK(w)_RA-226
WATER_AR(w)_RA-226
WATER_AS(w)_RA-226
WATER_D(w)_RA-226
WATER_DM(w)_RA-226
WATER_DC(w)_RA-226
WATER_GF(w)_RA-226
WATER_MS(w)_RA-226
WATER_BA(w)_RA-226
WATER_RF(w)_RA-226
WATER_VGS(w)_RA-226
SEDIMENT_A(s)_RA-228
SEDIMENT_AS(s)_RA-228

SEDIMENT_D(s)_RA-228
SEDIMENT_GF(s)_RA-228
SEDIMENT_BA(i)_RA-228
SEDIMENT_VGS(i)_RA-228
SOIL_AK(fi)_RA-228
SOIL_AK(f)_RA-228
SOIL_AR(p)_RA-228
SOIL_AR(i)_RA-228
SOIL_AR(ip)_RA-228
SOIL_DM(ip)_RA-228
SOIL_DC(p)_RA-228
SOIL_EW_RA-228
SOIL_GP_RA-228
SOIL_MS(i)_RA-228
SOIL_RF(f)_RA-228
WATER_A(w)_RA-228
WATER_AK(w)_RA-228
WATER_AR(w)_RA-228
WATER_AS(w)_RA-228
WATER_D(w)_RA-228
WATER_DM(w)_RA-228
WATER_DC(w)_RA-228
WATER_GF(w)_RA-228
WATER_MS(w)_RA-228
WATER_BA(w)_RA-228
WATER_RF(w)_RA-228
WATER_VGS(w)_RA-228
SEDIMENT_A(s)_NA-22
SEDIMENT_AS(s)_NA-22
SEDIMENT_D(s)_NA-22
SEDIMENT_GF(s)_NA-22
SEDIMENT_BA(i)_NA-22
SEDIMENT_VGS(i)_NA-22
SOIL_AK(fi)_NA-22
SOIL_AK(f)_NA-22
SOIL_AR(p)_NA-22
SOIL_AR(i)_NA-22
SOIL_AR(ip)_NA-22
SOIL_DM(ip)_NA-22
SOIL_DC(p)_NA-22
SOIL_EW_NA-22
SOIL_GP_NA-22
SOIL_MS(i)_NA-22
SOIL_RF(f)_NA-22
WATER_A(w)_NA-22
WATER_AK(w)_NA-22
WATER_AR(w)_NA-22

WATER_AS(w)_NA-22
WATER_D(w)_NA-22
WATER_DM(w)_NA-22
WATER_DC(w)_NA-22
WATER_GF(w)_NA-22
WATER_MS(w)_NA-22
WATER_BA(w)_NA-22
WATER_RF(w)_NA-22
WATER_VGS(w)_NA-22
SEDIMENT_A(s)_SR-90/ Y-90
SEDIMENT_AS(s)_SR-90/ Y-90
SEDIMENT_D(s)_SR-90/ Y-90
SEDIMENT_GF(s)_SR-90/ Y-90
SEDIMENT_BA(i)_SR-90/ Y-90
SEDIMENT_VGS(i)_SR-90/ Y-90
SOIL_AK(fi)_SR-90/ Y-90
SOIL_AK(f)_SR-90/ Y-90
SOIL_AR(p)_SR-90/ Y-90
SOIL_AR(i)_SR-90/ Y-90
SOIL_AR(ip)_SR-90/ Y-90
SOIL_DM(ip)_SR-90/ Y-90
SOIL_DC(p)_SR-90/ Y-90
SOIL_EW_SR-90/ Y-90
SOIL_GP_SR-90/ Y-90
SOIL_MS(i)_SR-90/ Y-90
SOIL_RF(f)_SR-90/ Y-90
WATER_A(w)_SR-90/ Y-90
WATER_AK(w)_SR-90/ Y-90
WATER_AR(w)_SR-90/ Y-90
WATER_AS(w)_SR-90/ Y-90
WATER_D(w)_SR-90/ Y-90
WATER_DM(w)_SR-90/ Y-90
WATER_DC(w)_SR-90/ Y-90
WATER_GF(w)_SR-90/ Y-90
WATER_MS(w)_SR-90/ Y-90
WATER_BA(w)_SR-90/ Y-90
WATER_RF(w)_SR-90/ Y-90
WATER_VGS(w)_SR-90/ Y-90
SEDIMENT_A(s)_TH-228
SEDIMENT_AS(s)_TH-228
SEDIMENT_D(s)_TH-228
SEDIMENT_GF(s)_TH-228
SEDIMENT_BA(i)_TH-228
SEDIMENT_VGS(i)_TH-228
SOIL_AK(fi)_TH-228
SOIL_AK(f)_TH-228
SOIL_AR(p)_TH-228

SOIL_AR(i)_TH-228
SOIL_AR(ip)_TH-228
SOIL_DM(ip)_TH-228
SOIL_DC(p)_TH-228
SOIL_EW_TH-228
SOIL_GP_TH-228
SOIL_MS(i)_TH-228
SOIL_RF(f)_TH-228
WATER_A(w)_TH-228
WATER_AK(w)_TH-228
WATER_AR(w)_TH-228
WATER_AS(w)_TH-228
WATER_D(w)_TH-228
WATER_DM(w)_TH-228
WATER_DC(w)_TH-228
WATER_GF(w)_TH-228
WATER_MS(w)_TH-228
WATER_BA(w)_TH-228
WATER_RF(w)_TH-228
WATER_VGS(w)_TH-228
SEDIMENT_A(s)_TH-229
SEDIMENT_AS(s)_TH-229
SEDIMENT_D(s)_TH-229
SEDIMENT_GF(s)_TH-229
SEDIMENT_BA(i)_TH-229
SEDIMENT_VGS(i)_TH-229
SOIL_AK(fi)_TH-229
SOIL_AK(f)_TH-229
SOIL_AR(p)_TH-229
SOIL_AR(i)_TH-229
SOIL_AR(ip)_TH-229
SOIL_DM(ip)_TH-229
SOIL_DC(p)_TH-229
SOIL_EW_TH-229
SOIL_GP_TH-229
SOIL_MS(i)_TH-229
SOIL_RF(f)_TH-229
WATER_A(w)_TH-229
WATER_AK(w)_TH-229
WATER_AR(w)_TH-229
WATER_AS(w)_TH-229
WATER_D(w)_TH-229
WATER_DM(w)_TH-229
WATER_DC(w)_TH-229
WATER_GF(w)_TH-229
WATER_MS(w)_TH-229
WATER_BA(w)_TH-229

WATER_RF(w)_TH-229
WATER_VGS(w)_TH-229
SEDIMENT_A(s)_TH-230
SEDIMENT_AS(s)_TH-230
SEDIMENT_D(s)_TH-230
SEDIMENT_GF(s)_TH-230
SEDIMENT_BA(i)_TH-230
SEDIMENT_VGS(i)_TH-230
SOIL_AK(fi)_TH-230
SOIL_AK(f)_TH-230
SOIL_AR(p)_TH-230
SOIL_AR(i)_TH-230
SOIL_AR(ip)_TH-230
SOIL_DM(ip)_TH-230
SOIL_DC(p)_TH-230
SOIL_EW_TH-230
SOIL_GP_TH-230
SOIL_MS(i)_TH-230
SOIL_RF(f)_TH-230
WATER_A(w)_TH-230
WATER_AK(w)_TH-230
WATER_AR(w)_TH-230
WATER_AS(w)_TH-230
WATER_D(w)_TH-230
WATER_DM(w)_TH-230
WATER_DC(w)_TH-230
WATER_GF(w)_TH-230
WATER_MS(w)_TH-230
WATER_BA(w)_TH-230
WATER_RF(w)_TH-230
WATER_VGS(w)_TH-230
SEDIMENT_A(s)_TH-232
SEDIMENT_AS(s)_TH-232
SEDIMENT_D(s)_TH-232
SEDIMENT_GF(s)_TH-232
SEDIMENT_BA(i)_TH-232
SEDIMENT_VGS(i)_TH-232
SOIL_AK(fi)_TH-232
SOIL_AK(f)_TH-232
SOIL_AR(p)_TH-232
SOIL_AR(i)_TH-232
SOIL_AR(ip)_TH-232
SOIL_DM(ip)_TH-232
SOIL_DC(p)_TH-232
SOIL_EW_TH-232
SOIL_GP_TH-232
SOIL_MS(i)_TH-232

SOIL_RF(f)_TH-232
WATER_A(w)_TH-232
WATER_AK(w)_TH-232
WATER_AR(w)_TH-232
WATER_AS(w)_TH-232
WATER_D(w)_TH-232
WATER_DM(w)_TH-232
WATER_DC(w)_TH-232
WATER_GF(w)_TH-232
WATER_MS(w)_TH-232
WATER_BA(w)_TH-232
WATER_RF(w)_TH-232
WATER_VGS(w)_TH-232
SEDIMENT_A(s)_H-3
SEDIMENT_AS(s)_H-3
SEDIMENT_D(s)_H-3
SEDIMENT_GF(s)_H-3
SEDIMENT_BA(i)_H-3
SEDIMENT_VGS(i)_H-3
SOIL_AK(fi)_H-3
SOIL_AK(f)_H-3
SOIL_AR(p)_H-3
SOIL_AR(i)_H-3
SOIL_AR(ip)_H-3
SOIL_DM(ip)_H-3
SOIL_DC(p)_H-3
SOIL_EW_H-3
SOIL_GP_H-3
SOIL_MS(i)_H-3
SOIL_RF(f)_H-3
WATER_A(w)_H-3
WATER_AK(w)_H-3
WATER_AR(w)_H-3
WATER_AS(w)_H-3
WATER_D(w)_H-3
WATER_DM(w)_H-3
WATER_DC(w)_H-3
WATER_GF(w)_H-3
WATER_MS(w)_H-3
WATER_BA(w)_H-3
WATER_RF(w)_H-3
WATER_VGS(w)_H-3
SEDIMENT_A(s)_U-233
SEDIMENT_AS(s)_U-233
SEDIMENT_D(s)_U-233
SEDIMENT_GF(s)_U-233
SEDIMENT_BA(i)_U-233

SEDIMENT_VGS(i)_U-233
SOIL_AK(fi)_U-233
SOIL_AK(f)_U-233
SOIL_AR(p)_U-233
SOIL_AR(i)_U-233
SOIL_AR(ip)_U-233
SOIL_DM(ip)_U-233
SOIL_DC(p)_U-233
SOIL_EW_U-233
SOIL_GP_U-233
SOIL_MS(i)_U-233
SOIL_RF(f)_U-233
WATER_A(w)_U-233
WATER_AK(w)_U-233
WATER_AR(w)_U-233
WATER_AS(w)_U-233
WATER_D(w)_U-233
WATER_DM(w)_U-233
WATER_DC(w)_U-233
WATER_GF(w)_U-233
WATER_MS(w)_U-233
WATER_BA(w)_U-233
WATER_RF(w)_U-233
WATER_VGS(w)_U-233
SEDIMENT_A(s)_U-234
SEDIMENT_AS(s)_U-234
SEDIMENT_D(s)_U-234
SEDIMENT_GF(s)_U-234
SEDIMENT_BA(i)_U-234
SEDIMENT_VGS(i)_U-234
SOIL_AK(fi)_U-234
SOIL_AK(f)_U-234
SOIL_AR(p)_U-234
SOIL_AR(i)_U-234
SOIL_AR(ip)_U-234
SOIL_DM(ip)_U-234
SOIL_DC(p)_U-234
SOIL_EW_U-234
SOIL_GP_U-234
SOIL_MS(i)_U-234
SOIL_RF(f)_U-234
WATER_A(w)_U-234
WATER_AK(w)_U-234
WATER_AR(w)_U-234
WATER_AS(w)_U-234
WATER_D(w)_U-234
WATER_DM(w)_U-234

WATER_DC(w)_U-234
WATER_GF(w)_U-234
WATER_MS(w)_U-234
WATER_BA(w)_U-234
WATER_RF(w)_U-234
WATER_VGS(w)_U-234
SEDIMENT_A(s)_U-235
SEDIMENT_AS(s)_U-235
SEDIMENT_D(s)_U-235
SEDIMENT_GF(s)_U-235
SEDIMENT_BA(i)_U-235
SEDIMENT_VGS(i)_U-235
SOIL_AK(fi)_U-235
SOIL_AK(f)_U-235
SOIL_AR(p)_U-235
SOIL_AR(i)_U-235
SOIL_AR(ip)_U-235
SOIL_DM(ip)_U-235
SOIL_DC(p)_U-235
SOIL_EW_U-235
SOIL_GP_U-235
SOIL_MS(i)_U-235
SOIL_RF(f)_U-235
WATER_A(w)_U-235
WATER_AK(w)_U-235
WATER_AR(w)_U-235
WATER_AS(w)_U-235
WATER_D(w)_U-235
WATER_DM(w)_U-235
WATER_DC(w)_U-235
WATER_GF(w)_U-235
WATER_MS(w)_U-235
WATER_BA(w)_U-235
WATER_RF(w)_U-235
WATER_VGS(w)_U-235
SEDIMENT_A(s)_U-236
SEDIMENT_AS(s)_U-236
SEDIMENT_D(s)_U-236
SEDIMENT_GF(s)_U-236
SEDIMENT_BA(i)_U-236
SEDIMENT_VGS(i)_U-236
SOIL_AK(fi)_U-236
SOIL_AK(f)_U-236

SOIL_AR(p)_U-236
SOIL_AR(i)_U-236
SOIL_AR(ip)_U-236
SOIL_DM(ip)_U-236
SOIL_DC(p)_U-236
SOIL_EW_U-236
SOIL_GP_U-236
SOIL_MS(i)_U-236
SOIL_RF(f)_U-236
WATER_A(w)_U-236
WATER_AK(w)_U-236
WATER_AR(w)_U-236
WATER_AS(w)_U-236
WATER_D(w)_U-236
WATER_DM(w)_U-236
WATER_DC(w)_U-236
WATER_GF(w)_U-236
WATER_MS(w)_U-236
WATER_BA(w)_U-236
WATER_RF(w)_U-236
WATER_VGS(w)_U-236
SEDIMENT_A(s)_U-238
SEDIMENT_AS(s)_U-238
SEDIMENT_D(s)_U-238
SEDIMENT_GF(s)_U-238
SEDIMENT_BA(i)_U-238
SEDIMENT_VGS(i)_U-238
SOIL_AK(fi)_U-238
SOIL_AK(f)_U-238
SOIL_AR(p)_U-238
SOIL_AR(i)_U-238
SOIL_AR(ip)_U-238
SOIL_DM(ip)_U-238
SOIL_DC(p)_U-238
SOIL_EW_U-238
SOIL_GP_U-238
SOIL_MS(i)_U-238
SOIL_RF(f)_U-238
WATER_A(w)_U-238
WATER_AK(w)_U-238
WATER_AR(w)_U-238
WATER_AS(w)_U-238
WATER_D(w)_U-238
WATER_DM(w)_U-238
WATER_DC(w)_U-238
WATER_GF(w)_U-238
WATER_MS(w)_U-238

WATER_BA(w)_U-238
WATER_RF(w)_U-238
WATER_VGS(w)_U-238
SEDIMENT_AQ(s)_65-85-0
SEDIMENT_BA(i)_65-85-0
SOIL_DM(ip)_65-85-0
SOIL_DC(p)_65-85-0
SOIL_MS(i)_65-85-0
SOIL_RF(f)_65-85-0
WATER_AQ(w)_65-85-0
WATER_DM(w)_65-85-0
WATER_DC(w)_65-85-0
WATER_MS(w)_65-85-0
WATER_BA(w)_65-85-0
WATER_RF(w)_65-85-0
SEDIMENT_BA(i)_117-81-7
SEDIMENT_VGS(i)_117-81-7
SOIL_AK(fi)_117-81-7
SOIL_AK(f)_117-81-7
SOIL_AR(p)_117-81-7
SOIL_AR(i)_117-81-7
SOIL_AR(ip)_117-81-7
SOIL_DM(ip)_117-81-7
SOIL_DC(p)_117-81-7
SOIL_MS(i)_117-81-7
SOIL_RF(f)_117-81-7
WATER_AK(w)_117-81-7
WATER_AR(w)_117-81-7
WATER_AQ(w)_117-81-7
WATER_DM(w)_117-81-7
WATER_DC(w)_117-81-7
WATER_MS(w)_117-81-7
WATER_BA(w)_117-81-7
WATER_RF(w)_117-81-7
WATER_VGS(w)_117-81-7
SEDIMENT_AQ(s)_85-68-7
SEDIMENT_BA(i)_85-68-7
SOIL_DM(ip)_85-68-7
SOIL_DC(p)_85-68-7
SOIL_MS(i)_85-68-7
SOIL_RF(f)_85-68-7
WATER_AQ(w)_85-68-7
WATER_DM(w)_85-68-7
WATER_DC(w)_85-68-7
WATER_MS(w)_85-68-7
WATER_BA(w)_85-68-7
WATER_RF(w)_85-68-7

SEDIMENT_BA(i)_86-74-8
SOIL_DM(ip)_86-74-8
SOIL_DC(p)_86-74-8
SOIL_MS(i)_86-74-8
SOIL_RF(f)_86-74-8
SEDIMENT_AQ(s)_108-90-7
SEDIMENT_BA(i)_108-90-7
SOIL_DM(ip)_108-90-7
SOIL_DC(p)_108-90-7
SOIL_EW_108-90-7
SOIL_MS(i)_108-90-7
SOIL_RF(f)_108-90-7
WATER_AQ(w)_108-90-7
WATER_DM(w)_108-90-7
WATER_DC(w)_108-90-7
WATER_MS(w)_108-90-7
WATER_BA(w)_108-90-7
WATER_RF(w)_108-90-7
SEDIMENT_AQ(s)_95-57-8
SEDIMENT_BA(i)_95-57-8
SEDIMENT_VGS(i)_95-57-8
SOIL_AK(fi)_95-57-8
SOIL_AK(f)_95-57-8
SOIL_AR(p)_95-57-8
SOIL_AR(i)_95-57-8
SOIL_AR(ip)_95-57-8
SOIL_DM(ip)_95-57-8
SOIL_DC(p)_95-57-8
SOIL_MS(i)_95-57-8
SOIL_RF(f)_95-57-8
WATER_AK(w)_95-57-8
WATER_AR(w)_95-57-8
WATER_AQ(w)_95-57-8
WATER_DM(w)_95-57-8
WATER_DC(w)_95-57-8
WATER_MS(w)_95-57-8
WATER_BA(w)_95-57-8
WATER_RF(w)_95-57-8
WATER_VGS(w)_95-57-8
SEDIMENT_AQ(s)_132-64-9
SOIL_GP_132-64-9
WATER_AQ(w)_132-64-9
SEDIMENT_BA(i)_84-66-2
SOIL_DM(ip)_84-66-2
SOIL_DC(p)_84-66-2
SOIL_GP_84-66-2
SOIL_MS(i)_84-66-2

SOIL_RF(f)_84-66-2
SEDIMENT_BA(i)_131-11-3
SOIL_DM(ip)_131-11-3
SOIL_DC(p)_131-11-3
SOIL_EW_131-11-3
SOIL_MS(i)_131-11-3
SOIL_RF(f)_131-11-3
WATER_AQ(w)_131-11-3
WATER_DM(w)_131-11-3
WATER_DC(w)_131-11-3
WATER_MS(w)_131-11-3
WATER_BA(w)_131-11-3
WATER_RF(w)_131-11-3
SEDIMENT_AQ(s)_84-74-2
SEDIMENT_BA(i)_84-74-2
SEDIMENT_VGS(i)_84-74-2
SOIL_AK(fi)_84-74-2
SOIL_AK(f)_84-74-2
SOIL_AR(p)_84-74-2
SOIL_AR(i)_84-74-2
SOIL_AR(ip)_84-74-2
SOIL_DM(ip)_84-74-2
SOIL_DC(p)_84-74-2
SOIL_GP_84-74-2
SOIL_MS(i)_84-74-2
SOIL_RF(f)_84-74-2
WATER_AK(w)_84-74-2
WATER_AR(w)_84-74-2
WATER_AQ(w)_84-74-2
WATER_DM(w)_84-74-2
WATER_DC(w)_84-74-2
WATER_MS(w)_84-74-2
WATER_BA(w)_84-74-2
WATER_RF(w)_84-74-2
WATER_VGS(w)_84-74-2
SEDIMENT_BA(i)_117-84-0
SOIL_DM(ip)_117-84-0
SOIL_DC(p)_117-84-0
SOIL_MS(i)_117-84-0
SOIL_RF(f)_117-84-0
WATER_AQ(w)_117-84-0
WATER_DM(w)_117-84-0
WATER_DC(w)_117-84-0
WATER_MS(w)_117-84-0
WATER_BA(w)_117-84-0
WATER_RF(w)_117-84-0
SEDIMENT_BA(i)_95-48-7

SOIL_DM(ip)_95-48-7
SOIL_DC(p)_95-48-7
SOIL_GP_95-48-7
SOIL_MS(i)_95-48-7
SOIL_RF(f)_95-48-7
SOIL_GP_108-39-4
SEDIMENT_BA(i)_88-74-4
SOIL_DM(ip)_88-74-4
SOIL_DC(p)_88-74-4
SOIL_MS(i)_88-74-4
SOIL_RF(f)_88-74-4
SEDIMENT_BA(i)_98-95-3
SOIL_DM(ip)_98-95-3
SOIL_DC(p)_98-95-3
SOIL_EW_98-95-3
SOIL_MS(i)_98-95-3
SOIL_RF(f)_98-95-3
WATER_AQ(w)_98-95-3
WATER_DM(w)_98-95-3
WATER_DC(w)_98-95-3
WATER_MS(w)_98-95-3
WATER_BA(w)_98-95-3
WATER_RF(w)_98-95-3
SEDIMENT_AQ(s)_82-68-8
SEDIMENT_BA(i)_82-68-8
SEDIMENT_VGS(i)_82-68-8
SOIL_AK(fi)_82-68-8
SOIL_AK(f)_82-68-8
SOIL_AR(p)_82-68-8
SOIL_AR(i)_82-68-8
SOIL_AR(ip)_82-68-8
SOIL_DM(ip)_82-68-8
SOIL_DC(p)_82-68-8
SOIL_MS(i)_82-68-8
SOIL_RF(f)_82-68-8
WATER_AK(w)_82-68-8
WATER_AR(w)_82-68-8
WATER_AQ(w)_82-68-8
WATER_DM(w)_82-68-8
WATER_DC(w)_82-68-8
WATER_MS(w)_82-68-8
WATER_BA(w)_82-68-8
WATER_RF(w)_82-68-8
WATER_VGS(w)_82-68-8
SEDIMENT_AQ(s)_87-86-5
SEDIMENT_BA(i)_87-86-5
SEDIMENT_VGS(i)_87-86-5

SOIL_AK(fi)_87-86-5
SOIL_AK(f)_87-86-5
SOIL_AR(p)_87-86-5
SOIL_AR(i)_87-86-5
SOIL_AR(ip)_87-86-5
SOIL_DM(ip)_87-86-5
SOIL_DC(p)_87-86-5
SOIL_EW_87-86-5
SOIL_GP_87-86-5
SOIL_MS(i)_87-86-5
SOIL_RF(f)_87-86-5
WATER_AK(w)_87-86-5
WATER_AR(w)_87-86-5
WATER_AQ(w)_87-86-5
WATER_DM(w)_87-86-5
WATER_DC(w)_87-86-5
WATER_MS(w)_87-86-5
WATER_BA(w)_87-86-5
WATER_RF(w)_87-86-5
WATER_VGS(w)_87-86-5
SEDIMENT_BA(i)_108-95-2
SOIL_DM(ip)_108-95-2
SOIL_DC(p)_108-95-2
SOIL_EW_108-95-2
SOIL_GP_108-95-2
SOIL_MS(i)_108-95-2
SOIL_RF(f)_108-95-2
WATER_AQ(w)_108-95-2
WATER_DM(w)_108-95-2
WATER_DC(w)_108-95-2
WATER_MS(w)_108-95-2
WATER_BA(w)_108-95-2
WATER_RF(w)_108-95-2
AIR_BPG(a)_67-64-1
SEDIMENT_AQ(s)_67-64-1
SEDIMENT_BA(i)_67-64-1
SEDIMENT_VGS(i)_67-64-1
SOIL_AK(fi)_67-64-1
SOIL_AK(f)_67-64-1
SOIL_AR(p)_67-64-1
SOIL_AR(i)_67-64-1
SOIL_AR(ip)_67-64-1
SOIL_DM(ip)_67-64-1
SOIL_DC(p)_67-64-1
SOIL_MS(i)_67-64-1
SOIL_RF(f)_67-64-1
WATER_AK(w)_67-64-1

WATER_AR(w)_67-64-1
WATER_AQ(w)_67-64-1
WATER_DM(w)_67-64-1
WATER_DC(w)_67-64-1
WATER_MS(w)_67-64-1
WATER_BA(w)_67-64-1
WATER_RF(w)_67-64-1
WATER_VGS(w)_67-64-1
AIR_BPG(a)_71-43-2
SEDIMENT_AQ(s)_71-43-2
SEDIMENT_BA(i)_71-43-2
SOIL_DM(ip)_71-43-2
SOIL_DC(p)_71-43-2
SOIL_MS(i)_71-43-2
SOIL_RF(f)_71-43-2
WATER_AQ(w)_71-43-2
WATER_DM(w)_71-43-2
WATER_DC(w)_71-43-2
WATER_MS(w)_71-43-2
WATER_BA(w)_71-43-2
WATER_RF(w)_71-43-2
SEDIMENT_BA(i)_100-51-6
SOIL_DM(ip)_100-51-6
SOIL_DC(p)_100-51-6
SOIL_MS(i)_100-51-6
SOIL_RF(f)_100-51-6
SEDIMENT_BA(i)_78-93-3
SOIL_DM(ip)_78-93-3
SOIL_DC(p)_78-93-3
SOIL_MS(i)_78-93-3
SOIL_RF(f)_78-93-3
WATER_AQ(w)_78-93-3
WATER_DM(w)_78-93-3
WATER_DC(w)_78-93-3
WATER_MS(w)_78-93-3
WATER_BA(w)_78-93-3
WATER_RF(w)_78-93-3
SEDIMENT_BA(i)_75-15-0
SOIL_DM(ip)_75-15-0
SOIL_DC(p)_75-15-0
SOIL_MS(i)_75-15-0
SOIL_RF(f)_75-15-0
AIR_BPG(a)_56-23-5
SOIL_EW_106-47-8
SOIL_GP_106-47-8
AIR_BPG(a)_67-66-3
SEDIMENT_BA(i)_67-66-3

SOIL_DM(ip)_67-66-3
SOIL_DC(p)_67-66-3
SOIL_MS(i)_67-66-3
SOIL_RF(f)_67-66-3
WATER_AQ(w)_67-66-3
WATER_DM(w)_67-66-3
WATER_DC(w)_67-66-3
WATER_MS(w)_67-66-3
WATER_BA(w)_67-66-3
WATER_RF(w)_67-66-3
AIR_BPG(a)_74-87-3
SEDIMENT_BA(i)_95-50-1
SOIL_DM(ip)_95-50-1
SOIL_DC(p)_95-50-1
SOIL_MS(i)_95-50-1
SOIL_RF(f)_95-50-1
SEDIMENT_BA(i)_541-73-1
SOIL_DM(ip)_541-73-1
SOIL_DC(p)_541-73-1
SOIL_MS(i)_541-73-1
SOIL_RF(f)_541-73-1
SEDIMENT_AQ(s)_106-46-7
SEDIMENT_BA(i)_106-46-7
SOIL_DM(ip)_106-46-7
SOIL_DC(p)_106-46-7
SOIL_EW_106-46-7
SOIL_MS(i)_106-46-7
SOIL_RF(f)_106-46-7
WATER_AQ(w)_106-46-7
WATER_DM(w)_106-46-7
WATER_DC(w)_106-46-7
WATER_MS(w)_106-46-7
WATER_BA(w)_106-46-7
WATER_RF(w)_106-46-7
AIR_BPG(a)_75-71-8
AIR_BPG(a)_75-34-3
SEDIMENT_AQ(s)_75-34-3
SEDIMENT_BA(i)_75-34-3
SOIL_DM(ip)_75-34-3
SOIL_DC(p)_75-34-3
SOIL_MS(i)_75-34-3
SOIL_RF(f)_75-34-3
WATER_AQ(w)_75-34-3
WATER_DM(w)_75-34-3
WATER_DC(w)_75-34-3
WATER_MS(w)_75-34-3
WATER_BA(w)_75-34-3

WATER_RF(w)_75-34-3
AIR_BPG(a)_107-06-2
SEDIMENT_BA(i)_107-06-2
SEDIMENT_VGS(i)_107-06-2
SOIL_AK(fi)_107-06-2
SOIL_AK(f)_107-06-2
SOIL_AR(p)_107-06-2
SOIL_AR(i)_107-06-2
SOIL_AR(ip)_107-06-2
SOIL_DM(ip)_107-06-2
SOIL_DC(p)_107-06-2
SOIL_MS(i)_107-06-2
SOIL_RF(f)_107-06-2
WATER_AK(w)_107-06-2
WATER_AR(w)_107-06-2
WATER_AQ(w)_107-06-2
WATER_DM(w)_107-06-2
WATER_DC(w)_107-06-2
WATER_MS(w)_107-06-2
WATER_BA(w)_107-06-2
WATER_RF(w)_107-06-2
WATER_VGS(w)_107-06-2
AIR_BPG(a)_75-35-4
SEDIMENT_AQ(s)_75-35-4
SEDIMENT_BA(i)_75-35-4
SOIL_DM(ip)_75-35-4
SOIL_DC(p)_75-35-4
SOIL_MS(i)_75-35-4
SOIL_RF(f)_75-35-4
WATER_AQ(w)_75-35-4
WATER_DM(w)_75-35-4
WATER_DC(w)_75-35-4
WATER_MS(w)_75-35-4
WATER_BA(w)_75-35-4
WATER_RF(w)_75-35-4
SEDIMENT_AQ(s)_540-59-0
SEDIMENT_BA(i)_540-59-0
SOIL_DM(ip)_540-59-0
SOIL_DC(p)_540-59-0
SOIL_MS(i)_540-59-0
SOIL_RF(f)_540-59-0
WATER_AQ(w)_540-59-0
WATER_DM(w)_540-59-0
WATER_DC(w)_540-59-0
WATER_MS(w)_540-59-0
WATER_BA(w)_540-59-0
WATER_RF(w)_540-59-0

SEDIMENT_VGS(i)_122-39-4
SOIL_AK(fi)_122-39-4
SOIL_AK(f)_122-39-4
SOIL_AR(p)_122-39-4
SOIL_AR(i)_122-39-4
SOIL_AR(ip)_122-39-4
SEDIMENT_BA(i)_118-74-1
SEDIMENT_VGS(i)_118-74-1
SOIL_AK(fi)_118-74-1
SOIL_AK(f)_118-74-1
SOIL_AR(p)_118-74-1
SOIL_AR(i)_118-74-1
SOIL_AR(ip)_118-74-1
SOIL_DM(ip)_118-74-1
SOIL_DC(p)_118-74-1
SOIL_EW_118-74-1
SOIL_GP_118-74-1
SOIL_MS(i)_118-74-1
SOIL_RF(f)_118-74-1
SEDIMENT_BA(i)_591-78-6
SEDIMENT_VGS(i)_591-78-6
SOIL_AK(fi)_591-78-6
SOIL_AK(f)_591-78-6
SOIL_AR(p)_591-78-6
SOIL_AR(i)_591-78-6
SOIL_AR(ip)_591-78-6
SOIL_DM(ip)_591-78-6
SOIL_DC(p)_591-78-6
SOIL_MS(i)_591-78-6
SOIL_RF(f)_591-78-6
SEDIMENT_VGS(i)_74-88-4
SOIL_AK(fi)_74-88-4
SOIL_AK(f)_74-88-4
SOIL_AR(p)_74-88-4
SOIL_AR(i)_74-88-4
SOIL_AR(ip)_74-88-4
SEDIMENT_BA(i)_108-10-1
SOIL_DM(ip)_108-10-1
SOIL_DC(p)_108-10-1
SOIL_MS(i)_108-10-1
SOIL_RF(f)_108-10-1
AIR_BPG(a)_75-09-2
SEDIMENT_AQ(s)_75-09-2
SEDIMENT_BA(i)_75-09-2
SOIL_DM(ip)_75-09-2
SOIL_DC(p)_75-09-2
SOIL_GP_75-09-2

SOIL_MS(i)_75-09-2
SOIL_RF(f)_75-09-2
WATER_AQ(w)_75-09-2
WATER_DM(w)_75-09-2
WATER_DC(w)_75-09-2
WATER_MS(w)_75-09-2
WATER_BA(w)_75-09-2
WATER_RF(w)_75-09-2
SOIL_EW_100-42-5
SOIL_GP_100-42-5
AIR_BPG(a)_127-18-4
SEDIMENT_AQ(s)_127-18-4
SEDIMENT_BA(i)_127-18-4
SOIL_DM(ip)_127-18-4
SOIL_DC(p)_127-18-4
SOIL_GP_127-18-4
SOIL_MS(i)_127-18-4
SOIL_RF(f)_127-18-4
WATER_AQ(w)_127-18-4
WATER_DM(w)_127-18-4
WATER_DC(w)_127-18-4
WATER_MS(w)_127-18-4
WATER_BA(w)_127-18-4
WATER_RF(w)_127-18-4
AIR_BPG(a)_108-88-3
SEDIMENT_AQ(s)_108-88-3
SEDIMENT_BA(i)_108-88-3
SOIL_DM(ip)_108-88-3
SOIL_DC(p)_108-88-3
SOIL_GP_108-88-3
SOIL_MS(i)_108-88-3
SOIL_RF(f)_108-88-3
WATER_AQ(w)_108-88-3
WATER_DM(w)_108-88-3
WATER_DC(w)_108-88-3
WATER_MS(w)_108-88-3
WATER_BA(w)_108-88-3
WATER_RF(w)_108-88-3
SEDIMENT_AQ(s)_120-82-1
SEDIMENT_BA(i)_120-82-1
SOIL_DM(ip)_120-82-1
SOIL_DC(p)_120-82-1
SOIL_EW_120-82-1
SOIL_MS(i)_120-82-1
SOIL_RF(f)_120-82-1
WATER_AQ(w)_120-82-1
WATER_DM(w)_120-82-1

WATER_DC(w)_120-82-1
WATER_MS(w)_120-82-1
WATER_BA(w)_120-82-1
WATER_RF(w)_120-82-1
AIR_BPG(a)_71-55-6
SEDIMENT_AQ(s)_71-55-6
SEDIMENT_BA(i)_71-55-6
SOIL_DM(ip)_71-55-6
SOIL_DC(p)_71-55-6
SOIL_MS(i)_71-55-6
SOIL_RF(f)_71-55-6
WATER_AQ(w)_71-55-6
WATER_DM(w)_71-55-6
WATER_DC(w)_71-55-6
WATER_MS(w)_71-55-6
WATER_BA(w)_71-55-6
WATER_RF(w)_71-55-6
AIR_BPG(a)_79-01-6
SEDIMENT_AQ(s)_79-01-6
SEDIMENT_BA(i)_79-01-6
SOIL_DM(ip)_79-01-6
SOIL_DC(p)_79-01-6
SOIL_MS(i)_79-01-6
SOIL_RF(f)_79-01-6
WATER_AQ(w)_79-01-6
WATER_DM(w)_79-01-6
WATER_DC(w)_79-01-6
WATER_MS(w)_79-01-6
WATER_BA(w)_79-01-6
WATER_RF(w)_79-01-6
AIR_BPG(a)_75-69-4
SEDIMENT_BA(i)_75-69-4
SOIL_DM(ip)_75-69-4
SOIL_DC(p)_75-69-4
SOIL_MS(i)_75-69-4
SOIL_RF(f)_75-69-4
SEDIMENT_BA(i)_75-01-4
SOIL_DM(ip)_75-01-4
SOIL_DC(p)_75-01-4
SOIL_MS(i)_75-01-4
SOIL_RF(f)_75-01-4
AIR_BPG(a)_1330-20-7
SEDIMENT_AQ(s)_1330-20-7
SEDIMENT_BA(i)_1330-20-7
SEDIMENT_VGS(i)_1330-20-7
SOIL_AK(fi)_1330-20-7
SOIL_AK(f)_1330-20-7

SOIL_AR(p)_1330-20-7
SOIL_AR(i)_1330-20-7
SOIL_AR(ip)_1330-20-7
SOIL_DM(ip)_1330-20-7
SOIL_DC(p)_1330-20-7
SOIL_GP_1330-20-7
SOIL_MS(i)_1330-20-7
SOIL_RF(f)_1330-20-7
WATER_AK(w)_1330-20-7
WATER_AR(w)_1330-20-7
WATER_AQ(w)_1330-20-7
WATER_DM(w)_1330-20-7
WATER_DC(w)_1330-20-7
WATER_MS(w)_1330-20-7
WATER_BA(w)_1330-20-7
WATER_RF(w)_1330-20-7
WATER_VGS(w)_1330-20-7