General
12-21-15

Los Alamos Environmental Restoration Records Processing Facility

ER Record I.D.# 0056204

LOS ALAMOS NATIONAL LABORATORY
ENVIRONMENTAL RESTORATION
Records Processing Facility
ER Records Index Form

ER ID NO. 56204 *Date Received:* 8/6/97 *Processor:* NSM *Page Count:* 210

Privileged: (Y/N) R *Record Category:* P *Record Package No:* 0

FileFolder: CHARACTERIZATION REPORT #76

Correction: (Y/N) N *Corrected No.* 0 *Corrected By Number:* 0

Administrative Record: (Y/N) Y

Refilmed: (Y/N) N *Old ER ID Number:* 0 *New ER ID Number:* 0

Miscellaneous Comments:
N/A

THIS FORM IS SUBJECT TO CHANGE. CONTACT THE RPF FOR LATT

37453

LOS ALAMOS SCIENTIFIC LABORATORY
Los Alamos, New Mexico 87545

Updated DOD Issue Comments March 1994

EXECUTIVE SUMMARY

Buildings 1, 2, 8, 15, 17, 26, 27, 28, 29, 30, 31, 33, 34, 35, 36, 37, 38, 39, 40, 41, 45, 46, 47, 56, 57, 89, 90, 91, 100, 101, 102, 103, 104, 105, 106, 111, 129, 130 and 143 were visited to document all drain piping and building outfalls and to make permitting recommendations. The pipes exiting the building are as follows:

1) from 48-15, 48-26, 48-27, 48-31, 48-33, 48-35, 48-36, 48-37, 48-38, 48-39, 48-40, 48-41, 48-89, 48-91, 48-100, 48-101, 48-102, 48-103, 48-104, 48-105, 48-106, 48-111, 48-129, 48-130 and 48-143: these buildings have no drains,

2) from 48-1: three sanitary sewer connections, three site radioactive liquid waste connections, four permitted outfalls (04A016, 03A045, 04A131 and 04A153), three vents to atmosphere from radioactive liquid waste tanks, one radioactive liquid waste tank connection, one boiler vent to the atmosphere, three condensate tank vents to the atmosphere, fourteen fire water system drains to daylight, one boiler pressure relief valve discharge to daylight, eleven pipe stub outs, one condensate drain from a filter plenum to daylight, four air conditioning condensate drains to daylight, one stack drain to daylight, eleven gas vents to the atmosphere, one vacuum pump drain to daylight, one nitrogen tank pressure relief valve discharge to the atmosphere, four bottled gas connections, twelve storm water discharges to daylight, five steam vents to the atmosphere, two nitrogen tank fill connections, one plumbing vent, one air compressor drain to daylight and three pipes to daylight from unknown sources,

3) from 48-2: one sanitary sewer connection and one water heater pressure relief valve discharge to daylight,

4) from 48-8: one water fountain drain to daylight, one sink drain to daylight, one water heater pressure relief valve discharge to daylight, one permitted outfall (04A126) to daylight from non-contact cooling water from a laser, a water service inlet to the building, one abandoned outfall to daylight, two air conditioning condensate drains to daylight, an air compressor drain to daylight, a back flow preventer drain to daylight, a roof gutter storm water drain to daylight and four fire water system drains to daylight,

5) from 48-17: one sanitary sewer connection, one fire water system drain to daylight, two air conditioning condensate drains to daylight, a liquid nitrogen tank fill connection, a liquid nitrogen pressure relief valve discharge to daylight, a liquid nitrogen connection to the building and an abandoned pipe stub,

6) from 48-28: one sanitary sewer connection, one permitted outfall (04A152) to daylight from non-contact cooling water from a laser, three fire water system drains to daylight, two liquid nitrogen tank drains to daylight, one liquid nitrogen tank fill connection and one liquid nitrogen tank pressure relief valve discharge to daylight,

7) from 48-29: one sanitary sewer connection, two storm water downspouts to daylight, two evaporative cooler drains to daylight and one water heater pressure relief valve discharge to daylight,

8) from 48-30: one air conditioning condensate drain to daylight,

9) from 48-34: one sanitary sewer connection, two evaporative cooler drains to daylight and two storm water downspouts to daylight,

10) from 48-45: two sanitary sewer connections, one connection to the site radioactive liquid waste collection system, two fire water system drains to daylight, four air conditioning condensate drains to daylight, eight storm water discharges to daylight from roof drains, fifteen storm water discharges to daylight from canales, one liquid nitrogen tank drain to daylight, one liquid nitrogen tank pressure relief valve discharge to daylight and one liquid nitrogen tank fill connection,

11) from 48-46: one sanitary sewer connection via building 48-47, one permitted outfall (04A137) to daylight, four air conditioning condensate drains to daylight and one water heater pressure relief valve discharge to daylight,

12) from 48-47: one sanitary sewer connection and two evaporative cooler drains to daylight,

13) from 48-56: one sanitary sewer connection and one storm water downspout to daylight,

14) from 48-57: one sanitary sewer connection via building 48-56, one evaporative cooler drain to daylight, one water heater pressure relief valve discharge to daylight and one storm water downspout to daylight.

Revised application forms have been included for the seven permitted outfalls. Flows shown on the included forms are estimated from site observations and discussions with users and analytical data are defined from information obtained from previously sampled outfalls.

Recommendations for repiping are provided to permit outfall consolidation to minimize permit maintenance requirements and to bring the facility into compliance with the Laboratory's NPDES permits and environmental policies. Floor drain plugging and spill containment is recommended where the potential for discharge of pollutants exists.

A waste stream database has been prepared listing wastewater type and flow rate for each outfall.

TABLE OF CONTENTS

1.0 INTRODUCTION 1

2.0 FIELD INVESTIGATION 3

3.0 RECOMMENDATIONS FOR BUILDINGS WITH NO DRAINS 4

4.0 RECOMMENDATIONS FOR BUILDING 48-1 4

4.1 Outfall 48-1-OPN-1 4
4.2 Outfall 48-1-OPN-2 4
4.3 Outfall 48-1-OPN-3 5
4.4 Outfall 48-1-OPN-4 5
4.5 Outfall 48-1-OPN-5 5
4.6 Outfall 48-1-OPN-6 6
4.7 Outfall 48-1-OPN-7 6
4.8 Outfall 48-1-OPN-8 6
4.9 Outfall 48-1-OPN-9 7
4.10 Outfall 48-1-OPN-10 7
4.11 Outfall 48-1-OPN-11 7
4.12 Outfall 48-1-OPN-12 7
4.13 Outfall 48-1-OPN-13 8
4.14 Outfalls 48-1-OPN-14, 48-1-OPN-15 and 48-1-OPN-16 8
4.15 Outfalls 48-1-OPN-17, 48-1-OPN-26, 48-1-OPN-33, 48-1-OPN-62, 48-1-OPN-63, 48-1-OPN-69, 48-1-OPN-70, 48-1-OPN-87 and 48-1-OPN-91 8
4.16 Outfalls 48-1-OPN-18, 48-1-OPN-19, 48-1-OPN-20, 48-1-OPN-28, 48-1-OPN-48, 48-1-OPN-64, 48-1-OPN-65, 48-1-OPN-68, 48-1-OPN-71, 48-1-OPN-72, 48-1-OPN-75, 48-1-OPN-78, 48-1-OPN-84 and 48-1-OPN-85 8
4.17 Outfall 48-1-OPN-21 8
4.18 Outfalls 48-1-OPN-22, 48-1-OPN-30, 48-1-OPN-89 and 48-1-OPN-90 9
4.19 Outfalls 48-1-OPN-23 and 48-1-OPN-25 9
4.20 Outfall 48-1-OPN-24 9
4.21 Outfalls 48-1-OPN-27, 48-1-OPN-49, 48-1-OPN-50 48-1-OPN-51, 48-1-OPN-52, 48-1-OPN-53, 48-1-OPN-57, 48-1-OPN-58, 48-1-OPN-59, 48-1-OPN-60 and 48-1-OPN-74 10
4.22 Outfall 48-1-OPN-31 10
4.23 Outfall 48-1-OPN-32 10
4.24 Outfalls 48-1-OPN-34, 48-1-OPN-35, 48-1-OPN-36

and 48-1-OPN-88 10
4.25 Outfalls 48-1-OPN-37, 48-1-OPN-38 and 48-1-OPN-55 10
4.26 Outfalls 48-1-OPN-39, 48-1-OPN-40, 48-1-OPN-41, 48-1-OPN-76, 48-1-OPN-77, 48-1-OPN-79, 48-1-OPN-80, 48-1-OPN-81, 48-1-OPN-82, 48-1-OPN-83 and 48-1-OPN-86 11
4.27 Outfalls 48-1-OPN-42 and 48-1-OPN-67 11
4.28 Outfalls 48-1-OPN-43, 48-1-OPN-44, 48-1-OPN-45, 48-1-OPN-46 and 48-1-OPN-47 11
4.29 Outfall 48-1-OPN-54 11
4.30 Outfall 48-1-OPN-56 11
4.31 Outfalls 48-1-OPN-66 and 48-1-OPN-67 11

5.0 RECOMMENDATIONS FOR BUILDING 48-2 12

5.1 Outfall 48-2-OPN-1 12
5.2 Outfall 48-2-OPN-2 12

6.0 RECOMMENDATIONS FOR BUILDING 48-8 12

6.1 Outfall 48-8-OPN-1 13
6.2 Outfall 48-8-OPN-2 13
6.3 Outfall 48-8-OPN-3 13
6.4 Outfall 48-8-OPN-4 13
6.5 Outfall 48-8-OPN-5 14
6.6 Outfall 48-8-OPN-6 14
6.7 Outfalls 48-8-OPN-7 and 48-8-OPN-8 14
6.8 Outfall 48-8-OPN-9 14
6.9 Outfall 48-8-OPN-10 14
6.10 Outfall 48-8-OPN-11 15
6.11 Outfalls 48-8-OPN-12, 48-8-OPN-13, 48-8-OPN-14 and 48-8-OPN-15 15

7.0 RECOMMENDATIONS FOR BUILDING 48-17 15

7.1 Outfall 48-17-OPN-1 15
7.2 Outfall 48-17-OPN-2 16
7.3 Outfalls 48-17-OPN-3 and 48-17-OPN-4 16
7.4 Outfalls 48-17-OPN-5, 48-17-OPN-6 and 48-17-OPN-7 16
7.5 Outfall 48-17-OPN-8 16

8.0 RECOMMENDATIONS FOR BUILDING 48-28 16

8.1 Outfall 48-28-OPN-1 17
8.2 Outfall 48-28-OPN-2 17
8.3 Outfalls 48-28-OPN-3, 48-28-OPN-4 and 48-28-OPN-5 17
8.4 Outfalls 48-28-OPN-6, 48-28-OPN-7, 48-28-OPN-8 and 48-28-OPN-9 17

9.0 RECOMMENDATIONS FOR BUILDING 48-29 18

9.1 Outfall 48-29-OPN-1 18
9.2 Outfalls 48-29-OPN-2 and 48-29-OPN-3 18
9.3 Outfalls 48-29-OPN-4 and 48-29-OPN-5 18
9.4 Outfall 48-29-OPN-6 19

10.0 RECOMMENDATIONS FOR BUILDING 48-30 19

11.0 RECOMMENDATIONS FOR BUILDING 48-34 19

11.1 Outfall 48-34-OPN-1 19
11.2 Outfalls 48-34-OPN-2 and 48-34-OPN-3 20
11.3 Outfalls 48-34-OPN-4 and 48-34-OPN-5 20

12.0 RECOMMENDATIONS FOR BUILDING 48-45 20

12.1 Outfall 48-45-OPN-1 20
12.2 Outfall 48-45-OPN-2 21
12.3 Outfall 48-45-OPN-3 21
12.4 Outfalls 48-45-OPN-4 and 48-45-OPN-5 21
12.5 Outfalls 48-45-OPN-6, 48-45-OPN-7, 48-45-OPN-8 and 48-45-OPN-9 22
12.6 Outfalls 48-45-OPN-10, 48-45-OPN-11, 48-45-OPN-12, 48-45-OPN-13, 48-45-OPN-14, 48-45-OPN-15, 48-45-OPN-16 and 48-45-OPN-17 22
12.7 Outfalls 48-45-OPN-18, 48-45-OPN-19, 48-45-OPN-20, 48-45-OPN-21, 48-45-OPN-22, 48-45-OPN-23, 48-45-OPN-24, 48-45-OPN-25, 48-45-OPN-26, 48-45-OPN-27, 48-45-OPN-28, 48-45-OPN-29, 48-45-OPN-30, 48-45-OPN-31 and 48-45-OPN-32 22
12.8 Outfalls 48-45-OPN-33, 48-45-OPN-34 and 48-45-OPN-35 22

13.0 RECOMMENDATIONS FOR BUILDING 48-46 22

13.1 Outfall 48-46-OPN-1 23
13.2 Outfall 48-46-OPN-2 23
13.3 Outfall 48-46-OPN-3 23
13.4 Outfall 48-46-OPN-4 23
13.5 Outfalls 48-46-OPN-5, 48-46-OPN-6 and 48-46-OPN-7 24

14.0 RECOMMENDATIONS FOR BUILDING 48-47 24

14.1 Outfall 48-47-OPN-1 24
14.2 Outfalls 48-47-OPN-2 and 48-47-OPN-3 24

15.0 RECOMMENDATIONS FOR BUILDING 48-56 25

15.1 Outfall 48-56-OPN-1 25
15.2 Outfall 48-56-OPN-2 25

16.0 RECOMMENDATIONS FOR BUILDING 48-57 25

16.1 Outfall 48-57-OPN-1 25
16.2 Outfall 48-57-OPN-2 26
16.3 Outfall 48-57-OPN-3 26
16.4 Outfall 48-57-OPN-4 26

17.0 CONCLUSION 27

APPENDICES

Appendix 1 - DRAIN SUMMARY TABLES
Appendix 2 - WASTESTREAM CHARACTERIZATION DATABASE
Appendix 3 - EPA FORMS
Appendix 4 - DYE STUDY INFORMATION
Appendix 5 - DRAIN SCHEMATICS

LIST OF TABLES

1. SUMMARY OF ABBREVIATIONS
2. TA 48-1 DRAIN SUMMARY
3. TA 48-2 DRAIN SUMMARY
4. TA 48-8 DRAIN SUMMARY
5. TA 48-17 DRAIN SUMMARY
6. TA 48-28 DRAIN SUMMARY
7. TA 48-29 DRAIN SUMMARY
8. TA 48-30 DRAIN SUMMARY
9. TA 48-34 DRAIN SUMMARY
10. TA 48-45 DRAIN SUMMARY
11. TA 48-46 DRAIN SUMMARY
12. TA 48-47 DRAIN SUMMARY
13. TA 48-56 DRAIN SUMMARY
14. TA 48-57 DRAIN SUMMARY
15. NON-DRAIN RECOMMENDATIONS

LIST OF FIGURES

1. TA-48 SITE PLAN
2. TA-48-1 BASEMENT DRAIN SCHEMATIC
3. TA-48-1 FIRST FLOOR DRAIN SCHEMATIC
4. TA-48-1 STORM DRAIN SCHEMATIC
5. TA-48-2 DRAIN SCHEMATIC
6. TA-48-8 DRAIN SCHEMATIC
7. TA-48-17 DRAIN SCHEMATIC
8. TA-48-28 DRAIN SCHEMATIC
9. TA-48-29 DRAIN SCHEMATIC
10. TA-48-30 DRAIN SCHEMATIC
11. TA-48-34 DRAIN SCHEMATIC
12. TA-48-45 DRAIN SCHEMATIC
13. TA-48-45 STORM DRAIN SCHEMATIC
14. TA-48-46 & 47 DRAIN SCHEMATIC
15. TA-48-56 & 57 DRAIN SCHEMATIC

1.0 INTRODUCTION

During May and June, 1993, Stephen Diamond and Dean Klingner of Santa Fe Engineering (SFE) toured buildings 1, 2, 8, 15, 17, 26, 27, 28, 29, 30, 31, 33, 34, 35, 36, 37, 38, 39, 40, 41, 45, 46, 47, 56, 57, 89, 90, 91, 100, 101, 102, 103, 104, 105, 106, 111, 129, 130 and 143 at TA-48. The purpose of this study is to identify building drain piping and to characterize the wastewater flows and sources existing at the time of the visit. At the time this study was conducted all TA-48 sanitary sewage was discharged to the 01S sanitary sewer outfall via the 13S collection system. This report will not reflect any subsequent changes in piping or operation. The Waste Stream Characterization Policy of September 10, 1992 was followed for this study. The following tasks were performed for this purpose:

1. Building drains and all piping exiting the building were identified and laid out in schematic form;

2. Wastewater sources were identified at each drain, and the wastewater was characterized according to flow rate and quality. The location of outfalls and their potential sources of discharge were determined. Potential pollutants were also noted;

3. Permit application for discharges of clean water were not prepared since these discharges do not require permitting at this time and,

4. Potential problems were identified and recommendations were made for repiping, floor drain plugging and spill containment, where deemed appropriate.

The field investigation proceeded by verifying drain schematic drawings prepared by SFE for the appropriate buildings

(Figures 2 through 15) from drawings provided by Los Alamos National Laboratory (LANL) Facilities Engineering Division. The other buildings were visited to insure that no drains exist for the buildings. The following process was used to define drain piping and characterize the wastewater streams:

1. Laboratory engineering drawings were used to prepare the SFE drain piping schematics. The Solid Waste Stream Characterization conducted by IT Corporation was also reviewed. The National Pollutant Discharge Elimination System (NPDES) Permit, the 1990 NPDES Permit Application submitted by Los Alamos National Laboratory (LANL) in September, 1990, the latest Federal Facilities Compliance Agreement (FFCA) between the Department of Energy (DOE) and the Environmental Protection Agency (EPA) and the Administrative Order (AO) Docket Number VI-92-1306 issued by EPA to the University of California were used for reference;

2. SFE verified drain piping by dye checking and

3. A site visit was performed to verify the SFE drain schematics and to identify potential outfall pipes exiting the building. The visit entailed a room by room inspection of wastewater sources and drains. Interviews with site personnel were conducted to assist in wastestream characterization.

2.0 FIELD INVESTIGATION

The pipes exiting the building have been assigned Outlet Piping Numbers. The four part number, sequentially, identifies the Technical Area where the pipe is located, the building from which the pipe discharges, the letters OPN to indicate that it is an outlet pipe number and the unique number for the pipe. The piping exiting the building will be labeled for easy identification in the future.

Each drain has a unique identification number. Each number consists of three parts. The first part indicates the floor on which the drain is located. The second part has letters that indicate the type of drain (see Table 1). The final part is the unique number for the drain. For example, the first floor drain in the sequence on the basement floor of a building would be labeled BFD1. Similarly, the first Roof Drain in a sequence would be identified as RD1.

The functions of each pipe exiting from the buildings are listed in Appendix 1, Tables 2 through 14, with an abbreviations list in Table 1. Table 15 in Appendix 1 contains recommendation information that is not specific to individual drains. Appendix 2 contains the wastestream characterization database output, listing wastewater source, flow rates and periodicity information for each outfall drain. Completed EPA forms are in Appendix 3 for the appropriate outfalls. Appendix 4 provides dye study information. Flow schematics of the drains from each building are attached in Appendix 5 as Figures 2 through 15. Figure 1 of Appendix 5 is a site plan of TA-48.

3.0 RECOMMENDATIONS FOR BUILDING WITH NO DRAINS

Buildings 48-15, 48-26, 48-27, 48-31, 48-33, 48-35, 48-36, 48-37, 48-38, 48-39, 48-40, 48-41, 48-89, 48-91, 48-100, 48-101, 48-102, 48-103, 48-104, 48-105, 48-106, 48-111, 48-129, 48-130 and 48-143 have no drains or sources of water. These buildings are transportainers, storage sheds or office trailers.

4.0 RECOMMENDATIONS FOR BUILDING 48-1

Building 1 is Radio Chemistry facility. Table 2 is a list of the drains to the building outfalls and Figures 2, 3 and 4 are schematics of the drain piping. Table 2 lists the drains that connect to the outfall pipe and includes recommendations for changes to the drain piping. The discussion below gives the reasoning for these recommendations.

4.1 Outfall 48-1-OPN-1

This outfall is from laboratory facilities and flows to the site radioactive liquid waste (RLW) system. Facilities that flow to this outfall include a cup drain, floor drains (9), sink drains (14), an equipment drain and a sump pump. It is recommended that the user group verify the destination of equipment drain 1ED21 from the shop in room 343. No piping changes or permits are recommended. No EPA forms were prepared.

4.2 Outfall 48-1-OPN-2

This outfall to daylight is permitted as 04A016. The sources of flow to this outfall are from non-contact cooling water from a magnet and a laser. It is recommended that recirculating cooling systems be used instead of the present once-through cooling systems in keeping with the Laboratory's current water conservation policies and that this outfall be eliminated. It is also recommended that once recirculating cooling systems are

installed that ESH-8 review the permit for deletion. An updated EPA Form 2C has been prepared and is included in Appendix 3.

4.3 Outfall 48-1-OPN-3

This outfall is from sanitary facilities and flows to the TA-48 sanitary sewer system. Facilities that flow to this outfall include a clothes washer, floor drains (14), a floor sink, lavatories (10), sink drains (6), showers (5), toilets (10), a urinal and water fountains (6). It is recommended that floor drains 1FD10, 1FD11 and 1FD12 be permanently plugged. It is also recommended that sink drains 1SD15, 1SD16, 1SD17, 1SD18, BSD1, BSD2 and the clothes washer be labeled "Sanitary Waste Only - No Chemical Disposal". No permitting is recommended and no EPA forms were prepared.

4.4 Outfall 48-1-OPN-4

This outfall to daylight is permitted as 03A045. Facilities that flow to this outfall include cup drains (2), equipment drains (9), floor drains (15), a floor sink, a sink drain and roof drains (26). The permit is for a cooling tower blowdown which flows into floor sink BFS1. Due to the low volume of blowdown, it is recommended that this flow be repiped to the sanitary sewer system. It is recommended that all sources to this outfall, except the roof drains, either be plugged or repiped to the sanitary sewer system. This outfall would then become storm water only and ESH-8 could review this permit for possible deletion. An updated EPA Form 2C has been prepared and is included in Appendix 3.

4.5 Outfall 48-1-OPN-5

This outfall is from two air compressor drains to daylight. It was noted, during site visits, that there is oil on the ground in the vicinity of this compressor. It is recommended that the

discharge from this drain be containerized to prevent the discharge of oil to the environment. No permitting is recommended and no EPA forms were prepared.

4.6 Outfall 48-1-OPN-6

This outfall is from sanitary facilities and flows to the TA-48 sanitary sewer system. Facilities that flow to this outfall include floor drains (3), lavatories (4), sink drains (2), showers (2), toilets (3) and a urinal. It is recommended that sink drains 1SD19 and BSD4 be labeled "Sanitary Waste Only - No Chemical Disposal". No permitting is recommended and no EPA forms were prepared.

4.7 Outfall 48-1-OPN-7

This outfall to daylight is permitted as 04A153. Facilities that flow to this outfall include equipment drains (11), floor drains (4) and roof drains (5). There were no sources of non-contact cooling water, as indicated by the 04A category permit, flowing to any of the floor or equipment drains. Equipment drain ED1, located on the roof, once received cooling tower blowdown. This cooling tower is no longer in service and it is recommended that the equipment drain be removed. It is also recommended that the remaining floor drains and equipment drains be repiped to the sanitary sewer system. These actions will leave the outfall as storm water only and the permit may then be deleted. An updated EPA Form 2C has been prepared and is included in Appendix 3.

4.8 Outfall 48-1-OPN-8

This outfall discharges to the site RLW system and includes flows from equipment drains (2), floor drains (12), sink drains (9) and sump pumps (2). No piping changes or permits are recommended. No EPA forms were prepared.

4.9 Outfall 48-1-OPN-9

This outfall is a vent to the atmosphere from an unused RLW tank. It is recommended that the pipe be removed and the building penetration be plugged. No permitting is recommended and no EPA forms were prepared.

4.10 Outfall 48-1-OPN-10

This outfall is the connection to pump out an unused RLW tank. The tank can potentially receive flow from a sink drain. It is recommended that this sink drain, 1SD28, be removed. It is also recommended that the outlet pipe from the tank be removed, the building penetration be plugged and the operating group review and implement the Los Alamos Spill Prevention Control and Countermeasures (SPCC) Plan, Revision 3, as it pertains to this RLW tank. No permitting is recommended and no EPA forms were prepared.

4.11 Outfall 48-1-OPN-11

This outfall is a boiler vent to the atmosphere. No piping changes or permits are recommended. No EPA forms were prepared.

4.12 Outfall 48-1-OPN-12

This outfall is a condensate drain from a filter plenum. It is recommended that this occasional discharge be included in a general Laboratory Notice of Intent (NOI) to discharge. No piping changes or permits are recommended. No EPA forms were prepared.

4.13 Outfall 48-1-OPN-13

This outfall is from a boiler pressure relief valve (PRV) that discharges to daylight. It is recommended that this occasional discharge be included in a general Laboratory NOI. No piping changes or permits are recommended. No EPA forms were prepared.

4.14 Outfalls 48-1-OPN-14, 48-1-OPN-15 and 48-1-OPN-16

These outfalls are condensate tank vents to the atmosphere. No piping changes or permits are recommended. No EPA forms were prepared.

4.15 Outfalls 48-1-OPN-17, 48-1-OPN-26, 48-1-OPN-33, 48-1-OPN-62, 48-1-OPN-63, 48-1-OPN-69, 48-1-OPN-70, 48-1-OPN-87 and 48-1-OPN-91

These outfalls are abandoned pipe stubs. There is no discharge to the environment. It is recommended that they be removed and the building penetrations be plugged. No permitting is recommended and no EPA permits were prepared.

4.16 Outfalls 48-1-OPN-18, 48-1-OPN-19, 48-1-OPN-20, 48-1-OPN-28, 48-1-OPN-48, 48-1-OPN-64, 48-1-OPN-65, 48-1-OPN-68, 48-1-OPN-71, 48-1-OPN-72, 48-1-OPN-75, 48-1-OPN-78, 48-1-OPN-84 and 48-1-OPN-85

These outfalls are fire water system drains to daylight. It is recommended that these occasional discharges be included in a general Laboratory NOI. No piping changes or permits are recommended. No EPA forms were prepared.

4.17 Outfall 48-1-OPN-21

This outfall to daylight is permitted as 04A131. Facilities that flow to this outfall include floor drains (8), a trench drain and roof drains (6). There were no sources of non-contact

cooling water, as indicated by the 04A category permit, flowing to any of these drains. It is recommended that floor drains 1FD26, 1FD27, 1FD28 and 1FD29 be plugged. It is also recommended that the remaining floor drains be repiped to the sanitary sewer system. These actions will leave this outfall as storm water only and the permit may be deleted. An updated EPA Form 2C has been prepared and is included in Appendix 3.

4.18 Outfalls 48-1-OPN-22, 48-1-OPN-30, 48-1-OPN-89 and 48-1-OPN-90

These outfalls to daylight are air conditioning condensate drains. It is recommended that these occasional discharges be included in a general Laboratory NOI. No piping changes or permits are recommended. No EPA forms were prepared.

4.19 Outfalls 48-1-OPN-23 and 48-1-OPN-25

These outfalls are valved stubs from filter plenums. It is recommended that locking mechanisms be installed on the valves and that the operating group review and implement the Los Alamos SPCC Plan, Revision 3, as it pertains to these stubs. No permitting is recommended and no EPA forms were prepared.

4.20 Outfall 48-1-OPN-24

This outfall to daylight is storm water from an exhaust stack drain. It is recommended that this discharge be tested for possible radioactive contamination. If found, this discharge should be containerized for treatment as RLW. No permitting is recommended and no EPA forms were prepared.

4.21 Outfalls 48-1-OPN-27, 48-1-OPN-49, 48-1-OPN-50, 48-1-OPN-51, 48-1-OPN-52, 48-1-OPN-53, 48-1-OPN-57, 48-1-OPN-58, 48-1-OPN-59, 48-1-OPN-60 and 48-1-OPN-74

These outfalls are gas vents to the atmosphere. No piping changes or permits are recommended. No EPA forms were prepared.

4.22 Outfall 48-1-OPN-31

This outfall is a liquid nitrogen tank PRV that discharges to the atmosphere. No piping changes or permits are recommended. No EPA forms were prepared.

4.23 Outfall 48-1-OPN-32

This outfall is from sanitary facilities and flows to the TA-48 sanitary sewer system. Facilities that flow to this outfall include lavatories (2) and toilets (2). No piping changes or permits are recommended. No EPA forms were prepared.

4.24 Outfalls 48-1-OPN-34, 48-1-OPN-35, 48-1-OPN-36, and 48-1-OPN-88

These outfalls are bottled gas connections. No piping changes or permits are recommended. No EPA forms were prepared.

4.25 Outfalls 48-1-OPN-37, 48-1-OPN-38 and 48-1-OPN-55

These outfalls are pipes from unknown sources that discharge to daylight. It is recommended that the operating group verify the sources to these outfalls. If no longer used, it is recommended that they be removed and the building penetrations be plugged. No permitting is recommended and no EPA forms were prepared.

4.26 Outfalls 48-1-OPN-39, 48-1-OPN-40, 48-1-OPN-41, 48-1-OPN-76, 48-1-OPN-77, 48-1-OPN-79, 48-1-OPN-80, 48-1-OPN-81, 48-1-OPN-82, 48-1-OPN-83 and 48-1-OPN-86

These outfalls are storm water discharges from roof canales, downspouts and roof drains to daylight. No piping changes or permits are recommended. No EPA forms were prepared.

4.27 Outfalls 48-1-OPN-42 and 48-1-OPN-67

These outfalls are the fill lines for liquid nitrogen tanks. There is no discharge to the environment. No piping changes or permits are recommended. No EPA forms were prepared.

4.28 Outfalls 48-1-OPN-43, 48-1-OPN-44, 48-1-OPN-45, 48-1-OPN-46 and 48-1-OPN-47

These outfalls are steam vents to the atmosphere. No piping changes or permits are recommended. No EPA forms were prepared.

4.29 Outfall 48-1-OPN-54

This outfall is from laboratory facilities and discharges to the site RLW system. Facilities that flow to this outfall include cup drains (52), equipment drains (25), floor drains (12), sink drains (46) and a sump pump. No piping changes or permits are recommended. No EPA forms were prepared.

4.30 Outfall 48-1-OPN-56

This outfall is a plumbing vent to the atmosphere. No piping changes or permits are recommended. No EPA forms were prepared.

4.31 Outfalls 48-1-OPN-66 and 48-1-OPN-67

These outfalls are RLW sump vents to the atmosphere. No piping changes or permits are recommended. No EPA forms were prepared.

5.0 RECOMMENDATIONS FOR BUILDING 48-2

Building 48-2 is a guard station. Table 3 is a list of drains to the outfalls for building 48-2 and Figure 5 is a schematic of the piping. The table lists the drains that connect to each outfall pipe and includes recommendations for changes to the drain piping. The discussion below gives the reasoning for the recommendations.

5.1 Outfall 48-2-OPN-1

This outfall is from sanitary facilities and flows to the TA-48 sanitary sewer system. Sanitary facilities that flow to this outfall include a floor drain, a lavatory, a toilet and a water fountain. No chemicals are drained into any of the drains or fixtures. No changes or permits are recommended for this outfall. No EPA forms were prepared.

5.2 Outfall 48-2-OPN-2

This outfall is from a water heater PRV and discharges to daylight. It is recommended that this occasional discharge be included in a general Laboratory Notice of Intent (NOI) to discharge. No permitting is recommended and no EPA forms were prepared.

6.0 RECOMMENDATIONS FOR BUILDING 48-8

Building 48-8 is a laser laboratory. Table 4 is a list of drains to the outfalls for building 48-8 and Figure 6 is a schematic of the piping. The table lists the drains that connect to each outfall pipe and includes recommendations for changes to the drain piping. The discussion below gives the reasoning for the recommendations.

6.1 Outfall 48-8-OPN-1

This outfall is from a water fountain drain and discharges to daylight. It is recommended that either the water fountain be removed and replaced with bottled water or the drain be repiped to the sanitary sewer collection system. No permitting is recommended, however an EPA Form 2D is included in Appendix 3.

6.2 Outfall 48-8-OPN-2

This outfall is from a sink drain located in the laser laboratory and discharges to daylight. It is recommended that the sink either be removed or it be repiped to the sanitary sewer collection system. No permitting is recommended, however an EPA Form 2D is included in Appendix 3.

6.3 Outfall 48-8-OPN-3

This outfall is from a water heater PRV and discharges to daylight. It is recommended that this occasional discharge be included in a general Laboratory NOI. No permitting is recommended and no EPA forms were prepared.

6.4 Outfall 48-8-OPN-4

This outfall to daylight is from non-contact cooling water from a laser and is permitted as 04A126. The laser cooling is now utilizing a recirculating system from building 48-1. It is recommended that the outfall be removed and the permit be reviewed by ESH-8 for deletion. No permitting is recommended and no EPA forms were prepared.

6.5 Outfall 48-8-OPN-5

This outfall is the water service inlet to the building. There is no discharge to the environment. No changes or permits are recommended. No EPA forms were prepared.

6.6 Outfall 48-8-OPN-6

This outfall is an abandoned pipe stub that was once the 04A126 outfall before it was relocated (see Section 6.4). The outfall is still signed as 04A126. It is recommended that both the pipe stub and the old 04A126 sign be removed. No permitting is recommended and no EPA forms were prepared.

6.7 Outfalls 48-8-OPN-7 and 48-8-OPN-8

These outfalls are condensate drains from air conditioning units. It is recommended that these occasional discharges be included in a general Laboratory NOI. No permitting is recommended and no EPA forms were prepared.

6.8 Outfall 48-8-OPN-9

This outfall is an air compressor drain and discharges to daylight. It is recommended that the discharge from this drain be containerized to prevent the discharge of oil to the environment. No permitting is recommended and no EPA forms were prepared.

6.9 Outfall 48-8-OPN-10

This outfall is from a back flow preventer and discharges to daylight. It is recommended that this occasional discharge be included in a general Laboratory NOI. No permitting is recommended and no EPA forms were prepared.

6.10 Outfall 48-8-OPN-11

This outfall is from a roof gutter storm water drain and discharges to daylight. No changes or permits are recommended. No EPA forms were prepared.

6.11 Outfalls 48-8-OPN-12, 48-8-OPN-13, 48-8-OPN-14 and 48-8-OPN-15

These outfalls are from fire water system drains and discharge to daylight. It is recommended that these occasional discharges be included in a general Laboratory NOI. No permitting is recommended and no EPA forms were prepared.

7.0 RECOMMENDATIONS FOR BUILDING 48-17

Building 48-17 is the assembly building. Table 5 is a list of drains to the outfalls for building 48-17 and Figure 7 is a schematic of the piping. The table lists the drains that connect to each outfall pipe and includes recommendations for changes to the drain piping. The discussion below gives the reasoning for the recommendations. The sink drain 1SD3 is not connected to any building outfall and the discharge from this sink is containerized in a carboy container.

7.1 Outfall 48-17-OPN-1

This outfall is from sanitary facilities and flows to the TA-48 sanitary sewer system. Sanitary facilities that flow to this outfall include an equipment drain, floor drains (2), a lavatory, sink drains (2) and a toilet. It is recommended that equipment drain 1ED1 and sink drains 1SD1 and 1SD2 be labeled "Sanitary Waste Only - No Chemical Disposal". Floor drains 1FD1 and 1FD2 should be permanently plugged. No permitting is recommended and no EPA forms were prepared.

7.2 Outfall 48-17-OPN-2

This outfall is from a fire water system drain and discharges to daylight. It is recommended that this occasional discharge be included in a general Laboratory NOI. No permitting is recommended and no EPA forms were prepared.

7.3 Outfalls 48-17-OPN-3 and 48-17-OPN-4

These outfalls are condensate drains from air conditioning units and discharge to daylight. It is recommended that these occasional discharges be included in a general Laboratory NOI. No permitting is recommended and no EPA forms were prepared.

7.4 Outfalls 48-17-OPN-5, 48-17-OPN-6 and 48-14-OPN-7

These outfalls are from a liquid nitrogen tank. Outfall 48-17-OPN-5 is the tank fill connection. Outfall 48-17-OPN-6 is a PRV that discharges to daylight. Outfall 48-17-OPN-7 is the liquid nitrogen connection to the building. No changes or permits are recommended. No EPA forms were prepared.

7.5 Outfall 48-17-OPN-8

This outfall is an abandoned pipe stub with no discharge. No changes or permits are recommended. No EPA forms were prepared.

8.0 RECOMMENDATIONS FOR BUILDING 48-28

Building 48-28 is the laser and instrument development building. Table 6 is a list of drains to the outfalls for building 48-28 and Figure 8 is the schematic of the piping. The table lists the drains that connect to each outfall pipe and includes recommendations for changes to the drain piping. The discussion below gives the reasoning for the recommendations.

8.1 Outfall 48-28-OPN-1

This outfall is from sanitary facilities and flows into the TA-48 sanitary sewer system. The sanitary facilities that flow into this outfall include floor drains (4), floor sinks (3), a lavatory, sink drains (4), a toilet, a urinal and a water fountain. It is recommended that sink drains 1SD1, 1SD2, 1SD3 and 1SD4 be labeled "Sanitary Waste Only - No Chemical Disposal". It is also recommended that floor drains 1FD1, 1FD3 and 1FD4 plus floor sinks 1FS1 and 1FS2 be permanently plugged. No permitting is recommended and no EPA forms were prepared.

8.2 Outfall 48-28-OPN-2

This outfall is permitted as 04A152 and is from non-contact cooling water from a laser and discharges to daylight. It is recommended that the once through cooling water be recirculated in keeping with current Laboratory water conservation policies and that the permit be deleted upon review by ESH-8. An EPA Form 2C has been prepared and is included in Appendix 3.

8.3 Outfalls 48-28-OPN-3, 48-28-OPN-4 and 48-28-OPN-5

These outfalls are from fire water system drains and discharge to daylight. It is recommended that these occasional discharges be included in a general Laboratory NOI. No permitting is recommended and no EPA forms were prepared.

8.4 Outfalls 48-28-OPN-6, 48-28-OPN-7, 48-28-OPN-8 and 48-28-OPN-9

These outfalls are from a liquid nitrogen tank. Outfalls 48-28-OPN-6 and 48-28-OPN-8 are tank drains that discharge to daylight. Outfall 48-28-OPN-7 is a PRV that discharges to daylight. Outfall 48-28-OPN-9 is the fill connection for the

tank. No changes or permits are recommended. No EPA forms were prepared.

9.0 RECOMMENDATIONS FOR BUILDING 48-29

Building 48-29 is an office building. Table 7 is a list of drains to the outfalls for building 48-29 and Figure 9 is a schematic of the piping. The table lists the drains that connect to each outfall pipe and includes recommendations for changes to the drain piping. The discussion below gives the reasoning for the recommendations.

9.1 Outfall 48-29-OPN-1

This outfall is from sanitary facilities and flows into the TA-48 sanitary sewer system. The sanitary facilities that flow into this outfall include lavatories (2), sink drains (2), a shower, toilets (2), a urinal and a water fountain. It is recommended that sink drains 1SD1 and 1SD2 be labeled "Sanitary Waste Only - No Chemical Disposal". No permitting is recommended and no EPA forms were prepared.

9.2 Outfalls 48-29-OPN-2 and 48-29-OPN-3

These outfalls are from roof gutter storm water drains and discharge to daylight. No changes or permits are recommended. No EPA forms were prepared.

9.3 Outfalls 48-29-OPN-4 and 48-29-OPN-5

These outfalls are evaporative cooler drains and discharge to daylight. It is recommended that these occasional discharges be included in a general Laboratory NOI. No permitting is recommended and no EPA forms were prepared.

9.4 Outfall 48-29-OPN-6

This outfall is from a water heater PRV and discharges to daylight. It is recommended that this occasional discharge be included in a general Laboratory NOI. No permitting is recommended and no EPA forms were prepared.

10.0 RECOMMENDATIONS FOR BUILDING 48-30

Building 48-30 is a clean room trailer. Table 8 is a list of drains to the outfalls for building 48-30 and Figure 10 is a schematic of the piping. The table lists the drains that connect to each outfall pipe and includes recommendations for changes to the drain piping. Outfall 48-30-OPN-1 is a condensate drain from an air conditioning unit that discharges to daylight. It is recommended that this occasional discharge be included in a general Laboratory NOI. No permitting is recommended and no EPA forms were prepared.

11.0 RECOMMENDATIONS FOR BUILDING 48-34

Building 48-34 is an office building. Table 9 is a list of drains to the outfalls for building 48-34 and Figure 11 is a schematic of the piping. The table lists the drains that connect to each outfall pipe and includes recommendations for changes to the drain piping. The discussion below gives the reasoning for the recommendations.

11.1 Outfall 48-34-OPN-1

This outfall is from sanitary facilities and flows into the TA-48 sanitary sewer system. The sanitary facilities that flow into this outfall include a floor sink, lavatories (2), a sink drain, a shower, toilets (2), a urinal and a water fountain. It is recommended that sink drain 1SD1 be labeled "Sanitary Waste

Only - No Chemical Disposal". No permitting is recommended and no EPA forms were prepared.

11.2 Outfalls 48-34-OPN-2 and 48-34-OPN-3

These outfalls are evaporative cooler drains and discharge to daylight. It is recommended that this occasional discharge be included in a general Laboratory NOI. No permitting is recommended and no EPA forms were prepared.

11.3 Outfalls 48-34-OPN-4 and 48-34-OPN-5

These outfalls are from roof gutter storm water drains and discharge to daylight. No changes or permits are recommended. No EPA forms were prepared.

12.0 RECOMMENDATIONS FOR BUILDING 48-45

Building 48-45 is the ARW diagnostics building. Table 10 is a list of drains to the outfalls for building 48-45 and Figures 12 and 13 are schematics of the piping. The table lists the drains that connect to each outfall pipe and includes recommendations for changes to the drain piping. The discussion below gives the reasoning for the recommendations. Water fountains 1WF1 and 1WF3 are not connected to any outfall and are not in use. It is recommended that these two water fountains be removed.

12.1 Outfall 48-45-OPN-1

This outfall is from equipment room floor drains (4) and flows into the TA-48 sanitary sewer system. Sources to the floor drains only include normal mechanical equipment flows (i.e. condensate). No changes or permits are recommended. No EPA forms were prepared.

12.2 Outfall 48-45-OPN-2

This outfall is from sanitary facilities and flows into the TA-48 sanitary sewer system. The sanitary facilities that flow into this outfall include lavatories (4), sink drains (2), showers (4), toilets (4), urinals (2) and a water fountain. It is recommended that sink drains 1SD7 and 1SD45 be labeled "Sanitary Waste Only - No Chemical Disposal". No permitting is recommended and no EPA forms were prepared.

12.3 Outfall 48-45-OPN-3

This outfall flows into the site RLW collection system. Facilities that flow into this outfall include an area drain, cup drains (3), emergency eye wash drains (4), floor drains (6) and sink drains (43). Area drain 1AD1 receives potentially contaminated water from the exhaust duct wash down system (see 48-45-OPN-36) but is also receiving storm water. It is recommended that the duct wash down drain be hard-piped to the RLW system at 1AD1 and the 1AD1 drain be sealed. This will prevent storm water from entering the RLW system and will also prevent a possible discharge of potentially contaminated wash down water to the environment should 1AD1 become blocked. No permitting is recommended and no EPA forms were prepared.

12.4 Outfalls 48-45-OPN-4 and 48-45-OPN-5

These outfalls are from fire water system drains and discharge to daylight. It is recommended that they be included in a general Laboratory NOI. No permitting is recommended and no EPA forms were prepared.

12.5 Outfalls 48-45-OPN-6, 48-45-OPN-7, 48-45-OPN-8 and 48-45-OPN-9

These outfalls are condensate drains from air conditioning units and discharge to daylight. It is recommended that these occasional discharges be included in a general Laboratory NOI. No permitting is recommended and no EPA forms were prepared.

12.6 Outfalls 48-45-OPN-10, 48-45-OPN-11, 48-45-OPN-12, 48-45-OPN-13, 48-45-OPN-14, 48-45-OPN-15, 48-45-OPN-16 and 48-45-OPN-17

These outfalls are storm water from building roof drains and discharge to daylight. No changes or permits are recommended. No EPA forms were prepared.

12.7 Outfalls 48-45-OPN-18, 48-45-OPN-19, 48-45-OPN-20, 48-45-OPN-21, 48-45-OPN-22, 48-45-OPN-23, 48-45-OPN-24, 48-45-OPN-25, 48-45-OPN-26, 48-45-OPN-27, 48-45-OPN-28, 48-45-OPN-29, 48-45-OPN-30, 48-45-OPN-31 and 48-45-OPN-32

These outfalls are storm water from roof canales and discharge to daylight. No changes or permits are recommended. No EPA forms were prepared.

12.8 Outfalls 48-45-OPN-33, 48-45-OPN-34 and 48-45-OPN-35.

These outfalls are from a liquid nitrogen tank. Outfall 48-45-OPN-33 is the tank drain to daylight. Outfall 48-45-OPN-34 is a PRV discharge to daylight. Outfall 48-45-OPN-35 is the tank fill connection. No changes or permits are recommended. No EPA forms were prepared.

13.0 RECOMMENDATIONS FOR BUILDING 48-46

Building 48-46 is an office building. Table 11 is a list of drains to the outfalls for building 48-46 and Figure 14 is a

schematic of the piping. The table lists the drains that connect to each outfall pipe and includes recommendations for changes to the drain piping. The discussion below gives the reasoning for the recommendations.

13.1 Outfall 48-46-OPN-1

This outfall is from sanitary facilities and flows into the TA-48 sanitary sewer system via building 48-47. The sanitary facilities that flow into this outfall include a water fountain. No changes or permits are recommended. No EPA forms were prepared.

13.2 Outfall 48-46-OPN-2

This outfall is permitted as 04A137 and discharges to daylight. Facilities that flow to this outfall include two sink drains. Discussions with the user group indicates that this outfall is no longer being used. There is no active flow to this outfall. It is recommended that ESH-8 review the permit for deletion and that the sinks either be repiped to the sanitary sewer system or be removed. No EPA forms were prepared.

13.3 Outfall 48-46-OPN-3

This outfall includes flows from an air conditioning condensate drain and a water heater PRV and discharges to daylight. It is recommended that this occasional discharge be included in a general Laboratory NOI. No permitting is recommended and no EPA forms were prepared.

13.4 Outfall 48-46-OPN-4

This outfall is from a water heater PRV and discharges to daylight. It is recommended that this occasional discharge be

included in a general Laboratory NOI. No permitting is recommended and no EPA forms were prepared.

13.5 Outfalls 48-46-OPN-5, 48-46-OPN-6 and 48-46-OPN-7

These outfalls are condensate drains from air conditioning units and discharge to daylight. It is recommended that these occasional discharges be included in a general Laboratory NOI. No permitting is recommended and no EPA forms were prepared.

14.0 RECOMMENDATIONS FOR BUILDING 48-47

Building 48-47 is an office building. Table 12 is a list of drains to the outfalls for building 48-47 and Figure 14 is a schematic of the piping. The table lists the drains that connect to each outfall pipe and includes recommendations for changes to the drain piping. The discussion below gives the reasoning for the recommendations.

14.1 Outfall 48-47-OPN-1

This outfall is from sanitary facilities and flows into the TA-48 sanitary sewer system. The sanitary facilities that flow into this outfall include a floor sink, lavatories (2), a sink drain, a shower, toilets (2), a urinal and a water fountain. It is recommended that sink drain 1SD1 be labeled "Sanitary Waste Only - No Chemical Disposal". No permitting is recommended and no EPA forms were prepared.

14.2 Outfalls 48-47-OPN-2 and 48-47-OPN-3

These outfalls are evaporative cooler drains and discharge to daylight. It is recommended that these occasional discharges be included in a general Laboratory NOI. No permitting is recommended and no EPA forms were prepared.

15.0 RECOMMENDATIONS FOR BUILDING 48-56

Building 48-56 is an office trailer. Table 13 is a list of the drains to the outfalls for building 48-56 and Figure 15 is a schematic of the piping. The table lists the drains that connect to each outfall pipe and includes recommendations for changes to the drain piping. The discussion below gives the reasoning for the recommendations.

15.1 Outfall 48-56-OPN-1

This outfall is from sanitary facilities and flows into the TA-48 sanitary sewer system. Sanitary facilities that flow to this outfall include a floor sink, lavatories (2), a shower, toilets (2) and a water fountain. No changes or permits are recommended. No EPA forms were prepared.

15.2 Outfall 48-56-OPN-2

This outfall is a roof gutter storm water drain and discharges to daylight. No changes or permits are recommended. No EPA forms were prepared.

16.0 RECOMMENDATIONS FOR BUILDING 48-57

Building 48-57 is an office building. Table 14 is a list of the drains to the outfalls for building 48-57 and Figure 15 is a schematic of the piping. The table lists the drains that connect to each outfall pipe and includes recommendations for changes to the drain piping. The discussion below gives the reasoning for the recommendations.

16.1 Outfall 48-57-OPN-1

This outfall is from sanitary facilities and flows into the TA-48 sanitary sewer system via building 48-56. The sanitary

facilities that flow into this outfall include a dishwasher drain and two sink drains. It is recommended that sink drains 1SD1 and 1SD2 be labeled "Sanitary Waste Only - No Chemical Disposal". No permitting is recommended and no EPA forms were prepared.

16.2 Outfall 48-57-OPN-2

This outfall is from an evaporative cooler drain and discharges to daylight. It is recommended that this occasional discharge be included in a general Laboratory NOI. No permitting is recommended and no EPA forms were prepared.

16.3 Outfall 48-57-OPN-3

This outfall is from a water heater PRV and discharges to daylight. It is recommended that this occasional discharge be included in a general Laboratory NOI. No permitting is recommended and no EPA forms were prepared.

16.4 Outfall 48-57-OPN-4

This outfall is from a roof gutter storm water drain and discharges to daylight. No changes or permits are recommended. No EPA forms were prepared.

Conclusion

17.0 CONCLUSION

This document provides the information to characterize buildings 1, 2, 8, 15, 17, 26, 27, 28, 29, 30, 31, 33, 34, 35, 36, 37, 38, 39, 40, 41, 45, 46, 47, 56, 57, 89, 90, 91, 100, 101, 102, 103, 104, 105, 106, 111, 129, 130 and 143 at TA-48. NPDES permit application forms have been completed for the following outfalls.

Forms 2C:

1. 48-1-OPN-2 (04A016)
2. 48-1-OPN-4 (03A045)
3. 48-1-OPN-7 (04A153)
4. 48-1-OPN-21 (04A131)
5. 48-28-OPN-2 (04A152)

Forms 2D:

1. 48-8-OPN-1
2. 48-8-OPN-2

Other outlet pipes are as follows:

Buildings with no drains:

1.	48-15	2.	48-26	3.	48-27	4.	48-31
5.	48-33	6.	48-35	7.	48-36	8.	48-37
9.	48-38	10.	48-39	11.	48-40	12.	48-41
13.	48-89	14.	48-91	15.	48-100	16.	48-101
17.	48-102	18.	48-103	19.	48-104	20.	48-105
21.	48-106	22.	48-111	23.	48-129	24.	48-130
25.	48-143						

Discharges to the SWSC Collection System:

1.	48-1-OPN-3	2.	48-1-OPN-6	3.	48-1-OPN-32
4.	48-2-OPN-1	5.	48-17-OPN-1	6.	48-28-OPN-1
7.	48-29-OPN-1	8.	48-34-OPN-1	9.	48-45-OPN-1
10.	48-45-OPN-2	11.	48-46-OPN-1	12.	48-47-OPN-1
13.	48-56-OPN-1	14.	48-57-OPN-1		

Discharge from vapor and gas vents:

1.	48-1-OPN-9	2.	48-1-OPN-11	3.	48-1-OPN-14
4.	48-1-OPN-15	5.	48-1-OPN-16	6.	48-1-OPN-27
7.	48-1-OPN-31	8.	48-1-OPN-42	9.	48-1-OPN-43
10.	48-1-OPN-44	11.	48-1-OPN-45	12.	48-1-OPN-46
13.	48-1-OPN-47	14.	48-1-OPN-49	15.	48-1-OPN-50
16.	48-1-OPN-51	17.	48-1-OPN-52	18.	48-1-OPN-53
19.	48-1-OPN-57	20.	48-1-OPN-58	21.	48-1-OPN-59
22.	48-1-OPN-60	23.	48-1-OPN-66	24.	48-1-OPN-67
25.	48-1-OPN-73	26.	48-1-OPN-74	27.	48-17-OPN-6
28.	48-28-OPN-7	29.	48-28-OPN-8	30.	48-45-OPN-33
31.	48-45-OPN-34				

Discharges from hot water pressure relief valves:

1.	48-1-OPN-13	2.	48-2-OPN-2	3.	48-8-OPN-3
4.	48-29-OPN-6	5.	48-46-OPN-4	6.	48-57-OPN-3

Discharges of untreated water and condensate drains:

1. 48-1-OPN-12	2. 48-1-OPN-22	3. 48-1-OPN-24
4. 48-1-OPN-29	5. 48-1-OPN-30	6. 48-1-OPN-89
7. 48-1-OPN-90	8. 48-8-OPN-7	9. 48-8-OPN-8
10. 48-17-OPN-3	11. 48-17-OPN-4	12. 48-29-OPN-4
13. 48-29-OPN-5	14. 48-30-OPN-1	15. 48-34-OPN-2
16. 48-34-OPN-3	17. 48-45-OPN-6	18. 48-45-OPN-7
19. 48-45-OPN-8	20. 48-45-OPN-9	21. 48-46-OPN-3
22. 48-46-OPN-5.	23. 48-46-OPN-6	24. 48-46-OPN-7
25. 48-47-OPN-2	26. 48-47-OPN-3	27. 48-57-OPN-2

Discharges of storm water:

1. 48-1-OPN-4	2. 48-1-OPN-21	3. 48-1-OPN-39
4. 48-1-OPN-40	5. 48-1-OPN-41	6. 48-1-OPN-61
7. 48-1-OPN-76	8. 48-1-OPN-77	9. 48-1-OPN-79
10. 48-1-OPN-80	11. 48-1-OPN-81	12. 48-1-OPN-82
13. 48-1-OPN-83	14. 48-1-OPN-86	15. 48-8-OPN-11
16. 48-29-OPN-2	17. 48-29-OPN-3	18. 48-34-OPN-4
19. 48-34-OPN-5	20. 48-45-OPN-10	21. 48-45-OPN-11
22. 48-45-OPN-12	23. 48-45-OPN-13	24. 48-45-OPN-14
25. 48-45-OPN-15	26. 48-45-OPN-16	27. 48-45-OPN-17
28. 48-45-OPN-18	29. 48-45-OPN-19	30. 48-45-OPN-20
31. 48-45-OPN-21	43. 48-45-OPN-22	33. 48-45-OPN-23
34. 48-45-OPN-24	35. 48-45-OPN-25	36. 48-45-OPN-26
37. 48-45-OPN-27	38. 48-45-OPN-28	39. 48-45-OPN-29
40. 48-45-OPN-30	41. 48-45-OPN-31	42. 48-45-OPN-32
43. 48-56-OPN-2	44. 48-57-OPN-4	

Discharges to daylight from floor drains:

1. 48-1-OPN-4	2. 48-1-OPN-7	3. 48-1-OPN-21

Discharges from fire water systems:

1.	48-1-OPN-18	2.	48-1-OPN-19	3.	48-1-OPN-20
4.	48-1-OPN-28	5.	48-1-OPN-48	6.	48-1-OPN-64
7.	48-1-OPN-65	8.	48-1-OPN-68	9.	48-1-OPN-71
10.	48-1-OPN-72	11.	48-1-OPN-75	12.	48-1-OPN-78
13.	48-1-OPN-84	14.	48-1-OPN-85	15.	48-8-OPN-12
16.	48-8-OPN-13	17.	48-8-OPN-14	18.	48-8-OPN-15
19.	48-17-OPN-2	20.	48-28-OPN-3	21.	48-28-OPN-4
22.	48-28-OPN-5	23.	48-45-OPN-4	24.	48-45-OPN-5

Discharges to the radioactive liquid waste collection system:

1.	48-1-OPN-1	2.	48-1-OPN-8	3.	48-1-OPN-54
4.	48-45-OPN-3				

Discharges from stack drains:

1. 48-1-OPN-24

Abandoned pipe stubs:

1.	48-1-OPN-17	2.	48-1-OPN-26	3.	48-1-OPN-33
4.	48-1-OPN-69	5.	48-1-OPN-70	6.	48-1-OPN-87
7.	48-1-OPN-91	8.	48-8-OPN-6	9.	48-17-OPN-8

Outfalls with unknown sources or destinations:

1.	48-1-OPN-37	2.	48-1-OPN-38	3.	48-1-OPN-55

Discharges from air compressor drains:

1.	48-1-OPN-5	2.	48-8-OPN-9

Miscellaneous discharges:

1.	48-1-OPN-10	2.	48-1-OPN-23	3.	48-1-OPN-25
4.	48-1-OPN-34	5.	48-1-OPN-35	6.	48-1-OPN-36
7.	48-1-OPN-56	8.	48-1-OPN-88	9.	48-8-OPN-5
10.	48-8-OPN-10	11.	48-17-OPN-5	12.	48-28-OPN-9
13.	48-45-OPN-35				

Recommended permitting and corrective action items are outlined in Tables 2 through 15 as well as in the above text. Corrective actions should be performed as soon as practicable to minimize the chance of unpermitted discharge of pollutants.

TABLE 1:
SUMMARY OF ABBREVIATIONS

ABBREVIATION	MEANING
A/C	AIR CONDITIONING
AD	AREA DRAIN
BFP	BACK FLOW PREVENTER
CW	CLOTHES WASHER
EC	EVAPORATIVE COOLER
EEW	EMERGENCY EYE WASH
FD	FLOOR DRAIN
FS	FLOOR SINK
IM	ICE MAKER
LV	LAVATORY
MH	MANHOLE
PRV	PRESSURE RELIEF VALVE
RLW	RADIOACTIVE LIQUID WASTE
RD	ROOF DRAIN
SD	SINK DRAIN
SH	SHOWER
SP	SUMP PUMP
SS	SANITARY SEWER
TL	TOILET
UR	URINAL
WF	WATER FOUNTAIN
WH	WATER HEATER

TABLE 2: TA 48-1 DRAIN SUMMARY

OUTFALL NUMBER	ID NUMBER	ROOM ACTIVITY	ROOM NUMBER	STATUS OR RECOMMENDATIONS	EPA FORM PREPARED
48-01-OPN-01 RLW	1CD01	LABORATORY	326	NO CHANGE	NO
	1ED21	SHOP	343	VERIFY	
	1FD01	HOT CELLS	334	NO CHANGE	
	1FD02	HOT CELLS	334	NO CHANGE	
	1FD03	HOT CELLS	334	NO CHANGE	
	1FD04	HOT CELLS	334	NO CHANGE	
	1FD05	LABORATORY	342	NO CHANGE	
	1FD06	LABORATORY	332	NO CHANGE	
	1FD07	LABORATORY	330	NO CHANGE	
	1FD08	LABORATORY	326	NO CHANGE	
	1FD09	LABORATORY	321	NO CHANGE	
	1SD01	HOT CELLS	334	NO CHANGE	
	1SD02	HOT CELLS	334	NO CHANGE	
	1SD03	LABORATORY	339A	NO CHANGE	
	1SD04	LABORATORY	339B	NO CHANGE	
	1SD05	LABORATORY	339C	NO CHANGE	
	1SD06	LABORATORY	339D	NO CHANGE	
	1SD07	LABORATORY	332	NO CHANGE	
	1SD08	LABORATORY	342	NO CHANGE	
	1SD09	LABORATORY	330	NO CHANGE	
	1SD10	LABORATORY	338	NO CHANGE	
	1SD11	LABORATORY	338	NO CHANGE	
	1SD12	LABORATORY	326	NO CHANGE	
	1SD13	LABORATORY	321	NO CHANGE	
	1SD14	LABORATORY	330	NO CHANGE	
	BSP1	BOILER ROOM	246	NO CHANGE	
48-01-OPN-02 04A016	BED01	LASER LAB	4	RECIRCULATE	YES
	BED02	LASER LAB	4	RECIRCULATE	
48-01-OPN-03 SANITARY	1CW01	LAUNDRY	348	LABEL	NO
	1FD10	LABORATORY	338	PLUG	
	1FD11	LABORATORY	338	PLUG	
	1FD12	LABORATORY	338	PLUG	
	1FD13	RESTROOM	328	NO CHANGE	
	1FD14	RESTROOM	130	NO CHANGE	
	1FD15	RESTROOM	104A	NO CHANGE	
	1FD16	RESTROOM	300A	NO CHANGE	
	1FS01	JANITOR'S CLOSET	114	NO CHANGE	

TABLE 2: TA 48-1 DRAIN SUMMARY

OUTFALL NUMBER	ID NUMBER	ROOM ACTIVITY	ROOM NUMBER	STATUS OR RECOMMENDATIONS	EPA FORM PREPARED
48-01-OPN-03 SANITARY	1LV01	RESTROOM	336	NO CHANGE	NO
	1LV02	RESTROOM	328	NO CHANGE	
	1LV03	RESTROOM	318	NO CHANGE	
	1LV04	RESTROOM	317	NO CHANGE	
	1LV05	RESTROOM	104A	NO CHANGE	
	1LV06	RESTROOM	104A	NO CHANGE	
	1LV07	RESTROOM	300A	NO CHANGE	
	1LV08	RESTROOM	300A	NO CHANGE	
	1LV09	RESTROOM	300A	NO CHANGE	
	1SD15	JANITOR'S CLOSET	N/A	LABEL	
	1SD16	JANITOR'S CLOSET	N/A	LABEL	
	1SD17	JANITOR'S CLOSET	114	LABEL	
	1SD18	JANITOR'S CLOSET	371	LABEL	
	1SH01	RESTROOM	328	NO CHANGE	
	1SH02	RESTROOM	318	NO CHANGE	
	1SH03	RESTROOM	317	NO CHANGE	
	1SH04	RESTROOM	104B	NO CHANGE	
	1SH05	RESTROOM	300B	NO CHANGE	
	1TL01	RESTROOM	336	NO CHANGE	
	1TL02	RESTROOM	328	NO CHANGE	
	1TL03	RESTROOM	318A	NO CHANGE	
	1TL04	RESTROOM	317	NO CHANGE	
	1TL05	RESTROOM	104A	NO CHANGE	
	1TL06	RESTROOM	104A	NO CHANGE	
	1TL07	RESTROOM	300A	NO CHANGE	
	1TL08	RESTROOM	300A	NO CHANGE	
	1TL09	RESTROOM	300A	NO CHANGE	
	1URO1	RESTROOM	328	NO CHANGE	
	1WF1	LABORATORY	330	NO CHANGE	
	1WF2	LABORATORY	348	NO CHANGE	
	1WF3	CORRIDOR	N/A	NO CHANGE	
	1WF4	LABORATORY	338	NO CHANGE	
	1WF5	LABORATORY	107B	NO CHANGE	
	BLV1	RESTROOM	47	NO CHANGE	
	BSD1	JANITOR'S CLOSET	1	LABEL	
	BSD2	LOUNGE	48	LABEL	

TABLE 2: TA 48-1 DRAIN SUMMARY

OUTFALL NUMBER	ID NUMBER	ROOM ACTIVITY	ROOM NUMBER	STATUS OR RECOMMENDATIONS	EPA FORM PREPARED
48-01-OPN-03 SANITARY	BTL1	RESTROOM	47	NO CHANGE	NO
	BWF1	CORRIDOR	N/A	NO CHANGE	
	2FD1	PENTHOUSE	500	NO CHANGE	
	2FD2	PENTHOUSE	500	NO CHANGE	
	2FD3	PENTHOUSE	500	NO CHANGE	
	2FD4	PENTHOUSE	500	NO CHANGE	
	2FD5	PENTHOUSE	500	NO CHANGE	
	2FD6	PENTHOUSE	500	NO CHANGE	
	2FD7	PENTHOUSE	500	NO CHANGE	
48-01-OPN-04 03A045	BCD01	ELECTRICAL ROOM	26	REMOVE	YES
	BCD02	BOILER ROOM	42	REPIPE TO S.S.	
	BED03	MECHANICAL ROOM	11	PLUG	
	BED04	LABORATORY	19A	REPIPE TO S.S.	
	BED05	MACHINE SHOP	50	PLUG	
	BED06	STORAGE	56	PLUG	
	BED07	STORAGE	56	PLUG	
	BED08	STORAGE	56	PLUG	
	BED09	EQUIPMENT ROOM	21	REPIPE TO S.S.	
	BED10	EQUIPMENT ROOM	21	REPIPE TO S.S.	
	BED11	BOILER ROOM	42	REPIPE TO S.S.	
	BFD01	STORAGE	15	REPIPE TO S.S.	
	BFD02	STORAGE	51	PLUG	
	BFD03	STORAGE	56	PLUG	
	BFD04	STORAGE	51	PLUG	
	BFD05	MACHINE SHOP	48	PLUG	
	BFD06	OFFICE	45	PLUG	
	BFD07	EQUIPMENT ROOM	21	PLUG	
	BFD08	EQUIPMENT ROOM	21	REPIPE TO S.S.	
	BFD09	EQUIPMENT ROOM	21	PLUG	
	BFD10	BOILER ROOM	42	REPIPE TO S.S.	
	BFD11	BOILER ROOM	42	REPIPE TO S.S.	
	BFD12	BOILER ROOM	42	REPIPE TO S.S.	
	BFD13	BOILER ROOM	42	REPIPE TO S.S.	
	BFD15	EQUIPMENT ROOM	21	REPIPE TO S.S.	
	BFD39	MACHINE SHOP	50	PLUG	
	BFS01	EQUIPMENT ROOM	21	REPIPE TO S.S.	

TABLE 2: TA 48-1 DRAIN SUMMARY

OUTFALL NUMBER	ID NUMBER	ROOM ACTIVITY	ROOM NUMBER	STATUS OR RECOMMENDATIONS	EPA FORM PREPARED
48-01-OPN-04 03A045	BSD03	PHOTO LAB	11	REPIPE TO S.S.	YES
	RD07	ROOF	N/A	NO CHANGE	
	RD08	ROOF	N/A	NO CHANGE	
	RD09	ROOF	N/A	NO CHANGE	
	RD10	ROOF	N/A	NO CHANGE	
	RD11	ROOF	N/A	NO CHANGE	
	RD12	ROOF	N/A	NO CHANGE	
	RD13	ROOF	N/A	NO CHANGE	
	RD14	ROOF	N/A	NO CHANGE	
	RD15	ROOF	N/A	NO CHANGE	
	RD16	ROOF	N/A	NO CHANGE	
	RD17	ROOF	N/A	NO CHANGE	
	RD18	ROOF	N/A	NO CHANGE	
	RD19	ROOF	N/A	NO CHANGE	
	RD20	ROOF	N/A	NO CHANGE	
	RD21	ROOF	N/A	NO CHANGE	
	RD22	ROOF	N/A	NO CHANGE	
	RD23	ROOF	N/A	NO CHANGE	
	RD24	ROOF	N/A	NO CHANGE	
	RD25	ROOF	N/A	NO CHANGE	
	RD26	ROOF	N/A	NO CHANGE	
	RD27	ROOF	N/A	NO CHANGE	
	RD28	ROOF	N/A	NO CHANGE	
	RD29	ROOF	N/A	NO CHANGE	
	RD30	ROOF	N/A	NO CHANGE	
	RD31	ROOF	N/A	NO CHANGE	
	RD32	ROOF	N/A	NO CHANGE	
48-01-OPN-05	N/A	AIR COMPRESSOR	N/A	CONTAINERIZE	NO
48-01-OPN-06 SANITARY	1FD17	RESTROOM	429A	NO CHANGE	NO
	1FD18	RESTROOM	428A	NO CHANGE	
	1LV10	RESTROOM	429A	NO CHANGE	
	1LV11	RESTROOM	429A	NO CHANGE	
	1LV12	RESTROOM	428A	NO CHANGE	
	1SD19	LABORATORY	418	LABEL	
	1SH06	RESTROOM	429A	NO CHANGE	
	1SH07	RESTROOM	428A	NO CHANGE	

TABLE 2: TA 48-1 DRAIN SUMMARY

OUTFALL NUMBER	ID NUMBER	ROOM ACTIVITY	ROOM NUMBER	STATUS OR RECOMMENDATIONS	EPA FORM PREPARED
48-01-OPN-06 SANITARY	1TL10	RESTROOM	429A	NO CHANGE	NO
	1TL11	RESTROOM	428A	NO CHANGE	
	1UR02	RESTROOM	429A	NO CHANGE	
	BFD16	RESTROOM	76	NO CHANGE	
	BLV02	RESTROOM	76	NO CHANGE	
	BSD04	RESTROOM	76	LABEL	
	BTL02	RESTROOM	76	NO CHANGE	
48-01-OPN-07 04A153	ED1	OLD COOLING TOWER	N/A	REMOVE	YES
	2ED1	PENTHOUSE	504	REPIPE TO S.S.	
	2FD1	PENTHOUSE	504	REPIPE TO S.S.	
	BED12	BOILER ROOM	71	REPIPE TO S.S.	
	BED13	BOILER ROOM	71	REPIPE TO S.S.	
	BED14	BOILER ROOM	71	REPIPE TO S.S.	
	BED15	MECHANICAL ROOM	70	REPIPE TO S.S.	
	BED16	MECHANICAL ROOM	70	REPIPE TO S.S.	
	BED17	MECHANICAL ROOM	70	REPIPE TO S.S.	
	BED18	MECHANICAL ROOM	70	REPIPE TO S.S.	
	BED19	MECHANICAL ROOM	70	REPIPE TO S.S.	
	BFD17	BOILER ROOM	71	REPIPE TO S.S.	
	BFD18	MECHANICAL ROOM	70	REPIPE TO S.S.	
	BFD19	MECHANICAL ROOM	70	REPIPE TO S.S.	
	RD33	ROOF	N/A	NO CHANGE	
	RD34	ROOF	N/A	NO CHANGE	
	RD35	ROOF	N/A	NO CHANGE	
	RD36	ROOF	N/A	NO CHANGE	
	RD37	ROOF	N/A	NO CHANGE	
48-01-OPN-08 RLW	1FD19	LABORATORY	426	NO CHANGE	NO
	1FD20	LABORATORY	430	NO CHANGE	
	1FD21	LABORATORY	419	NO CHANGE	
	1FD22	LABORATORY	423	NO CHANGE	
	1FD23	LABORATORY	430	NO CHANGE	
	1FD24	LABORATORY	430	NO CHANGE	
	1FD25	LABORATORY	425A	NO CHANGE	
	1SD20	LABORATORY	426	NO CHANGE	
	1SD21	LABORATORY	430	NO CHANGE	

TABLE 2: TA 48-1 DRAIN SUMMARY

OUTFALL NUMBER	ID NUMBER	ROOM ACTIVITY	ROOM NUMBER	STATUS OR RECOMMENDATIONS	EPA FORM PREPARED
48-01-OPN-08	1SD22	LABORATORY	419	NO CHANGE	NO
RLW	1SD23	LABORATORY	419	NO CHANGE	
	1SD24	LABORATORY	423	NO CHANGE	
	1SD25	LABORATORY	423	NO CHANGE	
	1SD26	LABORATORY	430	NO CHANGE	
	1SD27	LABORATORY	431	NO CHANGE	
	BED20	MECHANICAL ROOM	68	NO CHANGE	
	BED21	MECHANICAL ROOM	70	NO CHANGE	
	BED22	EXHAUST STACK	N/A	NO CHANGE	
	BFD20	MECHANICAL ROOM	70	NO CHANGE	
	BFD21	MECHANICAL ROOM	70	NO CHANGE	
	BFD22	MECHANICAL ROOM	70	NO CHANGE	
	BFD23	MECHANICAL ROOM	70	NO CHANGE	
	BFD24	HOT STORAGE	80	NO CHANGE	
	BSD05	MECHANICAL ROOM	70	NO CHANGE	
	BSP2	RLW SUMP RM	80	NO CHANGE	
	BSP3	RLW SUMP RM	80	NO CHANGE	
48-01-OPN-09	N/A	RLW TANK VENT	N/A	REMOVE	NO
48-01-OPN-10	1SD28	LABORATORY	322	REMOVE	NO
RLW TANK	N/A	RLW TANK	N/A	REMOVE	
48-01-OPN-11	N/A	BOILER VENT	N/A	NO CHANGE	NO
48-01-OPN-12	N/A	FILTER CONDENSATE DRAIN	N/A	NOI	NO
48-01-OPN-13	N/A	BOILER PRV	N/A	NOI	NO
48-01-OPN-14	N/A	CONDENSATE TANK VENT	N/A	NO CHANGE	NO
48-01-OPN-15	N/A	CONDENSATE TANK VENT	N/A	NO CHANGE	NO
48-01-OPN-16	N/A	CONDENSATE TANK VENT	N/A	NO CHANGE	NO
48-01-OPN-17	N/A	STUB OUT	N/A	REMOVE	NO
48-01-OPN-18	N/A	FIRE SYSTEM DRAIN	N/A	NOI	NO
48-01-OPN-19	N/A	FIRE SYSTEM DRAIN	N/A	NOI	NO
48-01-OPN-20	N/A	FIRE SYSTEM DRAIN	N/A	NOI	NO
48-01-OPN-21	1FD26	LABORATORY	344	PLUG	YES
04A131	1FD27	LABORATORY	344	PLUG	
	1FD28	LABORATORY	322	PLUG	
	1FD29	LABORATORY	322	PLUG	
	1FD32	LABORATORY	324	PLUG	
	BFD25	BOILER ROOM	244	PLUGGED	

TABLE 2: TA 48-1 DRAIN SUMMARY

OUTFALL NUMBER	ID NUMBER	ROOM ACTIVITY	ROOM NUMBER	STATUS OR RECOMMENDATIONS	EPA FORM PREPARED
48-01-OPN-21 04A131	BFD26	BOILER ROOM	244	REPIPE TO S.S.	YES
	BFD27	BOILER ROOM	244	REPIPE TO S.S.	
	BFD28	BOILER ROOM	244	REPIPE TO S.S.	
	BTD01	BOILER ROOM RAMP	EXT	NO CHANGE	
	RD01	ROOF	N/A	NO CHANGE	
	RD02	ROOF	N/A	NO CHANGE	
	RD03	ROOF	N/A	NO CHANGE	
	RD04	ROOF	N/A	NO CHANGE	
	RD05	ROOF	N/A	NO CHANGE	
	RD06	ROOF	N/A	NO CHANGE	
48-01-OPN-22	N/A	A/C CONDENSATE	N/A	NOI	NO
48-01-OPN-23	N/A	VALVED STUB	N/A	INSTALL LOCK	NO
48-01-OPN-24	N/A	STACK DRAIN	N/A	TEST/CONTAIN	NO
48-01-OPN-25	N/A	VALVED STUB	N/A	INSTALL LOCK	NO
48-01-OPN-26	N/A	PIPE STUB	N/A	REMOVE	NO
48-01-OPN-27	N/A	GAS VENT	N/A	NO CHANGE	NO
48-01-OPN-28	N/A	FIRE SYSTEM DRAIN	N/A	NOI	NO
48-01-OPN-29	N/A	VACUUM PUMP DRAIN	N/A	NOI	NO
48-01-OPN-30	N/A	A/C CONDENSATE	N/A	NOI	NO
48-01-OPN-31	N/A	NITROGEN TANK PRV	N/A	NO CHANGE	NO
48-01-OPN-32 SANITARY	1LV13	RESTROOM	604	NO CHANGE	NO
	1LV14	RESTROOM	602	NO CHANGE	
	1TL12	RESTROOM	604	NO CHANGE	
	1TL13	RESTROOM	602	NO CHANGE	
48-01-OPN-33	N/A	STUB OUT	N/A	REMOVE	NO
48-01-OPN-34	N/A	GAS CONNECTION	N/A	NO CHANGE	NO
48-01-OPN-35	N/A	GAS CONNECTION	N/A	NO CHANGE	NO
48-01-OPN-36	N/A	GAS CONNECTION	N/A	NO CHANGE	NO
48-01-OPN-37	N/A	UNKNOWN PIPE	N/A	VERIFY/REMOVE	NO
48-01-OPN-38	N/A	UNKNOWN PIPE	N/A	VERIFY/REMOVE	NO
48-01-OPN-39	N/A	STORM CANALE	N/A	NO CHANGE	NO
48-01-OPN-40	N/A	STORM CANALE	N/A	NO CHANGE	NO
48-01-OPN-41	N/A	STORM CANALE	N/A	NO CHANGE	NO
48-01-OPN-42	N/A	NITROGEN TANK FILL LINE	N/A	NO CHANGE	NO
48-01-OPN-43	N/A	STEAM VENT	N/A	NO CHANGE	NO
48-01-OPN-44	N/A	STEAM VENT	N/A	NO CHANGE	NO

TABLE 2: TA 48-1 DRAIN SUMMARY

OUTFALL NUMBER	ID NUMBER	ROOM ACTIVITY	ROOM NUMBER	STATUS OR RECOMMENDATIONS	EPA FORM PREPARED
48-01-OPN-45	N/A	STEAM VENT	N/A	NO CHANGE	NO
48-01-OPN-46	N/A	STEAM VENT	N/A	NO CHANGE	NO
48-01-OPN-47	N/A	STEAM VENT	N/A	NO CHANGE	NO
48-01-OPN-48	N/A	FIRE SYSTEM	N/A	NOI	NO
48-01-OPN-49	N/A	GAS VENT	N/A	NO CHANGE	NO
48-01-OPN-50	N/A	GAS VENT	N/A	NO CHANGE	NO
48-01-OPN-51	N/A	GAS VENT	N/A	NO CHANGE	NO
48-01-OPN-52	N/A	GAS VENT	N/A	NO CHANGE	NO
48-01-OPN-53	N/A	GAS VENT	N/A	NO CHANGE	NO
48-01-OPN-54	1CD02	LABORATORY	313	NO CHANGE	NO
RLW	1CD03	LABORATORY	315	NO CHANGE	
	1CD04	LABORATORY	315	NO CHANGE	
	1CD05	LABORATORY	314	NO CHANGE	
	1CD06	LABORATORY	314	NO CHANGE	
	1CD07	LABORATORY	312	NO CHANGE	
	1CD08	LABORATORY	311	NO CHANGE	
	1CD09	LABORATORY	311A	NO CHANGE	
	1CD10	LABORATORY	313	NO CHANGE	
	1CD11	LABORATORY	312B	NO CHANGE	
	1CD12	LABORATORY	310C	NO CHANGE	
	1CD13	LABORATORY	308B	NO CHANGE	
	1CD14	LABORATORY	308	NO CHANGE	
	1CD15	LABORATORY	310	NO CHANGE	
	1CD16	LABORATORY	307	NO CHANGE	
	1CD17	LABORATORY	307B	NO CHANGE	
	1CD18	LABORATORY	606	NO CHANGE	
	1CD19	LABORATORY	306A	NO CHANGE	
	1CD20	LABORATORY	306	NO CHANGE	
	1CD21	LABORATORY	306	NO CHANGE	
	1CD22	LABORATORY	306	NO CHANGE	
	1CD23	LABORATORY	305	NO CHANGE	
	1CD24	LABORATORY	303	NO CHANGE	
	1CD25	LABORATORY	305B	NO CHANGE	
	1CD26	LABORATORY	402B	NO CHANGE	
	1CD27	LABORATORY	402	NO CHANGE	

TABLE 2: TA 48-1 DRAIN SUMMARY

OUTFALL NUMBER	ID NUMBER	ROOM ACTIVITY	ROOM NUMBER	STATUS OR RECOMMENDATIONS	EPA FORM PREPARED
48-01-OPN-54 RLW	1CD28	LABORATORY	408B	NO CHANGE	NO
	1CD29	LABORATORY	408	NO CHANGE	
	1CD30	LABORATORY	407	NO CHANGE	
	1CD31	LABORATORY	407B	NO CHANGE	
	1CD32	LABORATORY	409	NO CHANGE	
	1CD33	LABORATORY	409	NO CHANGE	
	1CD34	LABORATORY	410	NO CHANGE	
	1CD35	LABORATORY	412B	NO CHANGE	
	1CD36	LABORATORY	410	NO CHANGE	
	1CD37	LABORATORY	410	NO CHANGE	
	1CD38	LABORATORY	412	NO CHANGE	
	1CD39	LABORATORY	410	NO CHANGE	
	1CD40	LABORATORY	409	NO CHANGE	
	1CD41	LABORATORY	409	NO CHANGE	
	1CD42	LABORATORY	409	NO CHANGE	
	1CD43	LABORATORY	414B	NO CHANGE	
	1CD44	LABORATORY	414	NO CHANGE	
	1CD45	LABORATORY	413	NO CHANGE	
	1CD46	LABORATORY	415	NO CHANGE	
	1CD47	LABORATORY	413C	NO CHANGE	
	1CD48	LABORATORY	415	NO CHANGE	
	1CD49	LABORATORY	415	NO CHANGE	
	1CD50	LABORATORY	415	NO CHANGE	
	1CD51	LABORATORY	415	NO CHANGE	
	1ED01	LABORATORY	346	NO CHANGE	
	1ED02	LABORATORY	346	NO CHANGE	
	1ED03	LABORATORY	346	NO CHANGE	
	1ED04	LABORATORY	346	NO CHANGE	
	1ED05	LABORATORY	346	NO CHANGE	
	1ED06	LABORATORY	346	NO CHANGE	
	1ED07	LABORATORY	346	NO CHANGE	
	1ED08	LABORATORY	346	NO CHANGE	
	1ED09	LABORATORY	346	NO CHANGE	
	1ED10	LABORATORY	346	NO CHANGE	

TABLE 2: TA 48-1 DRAIN SUMMARY

OUTFALL NUMBER	ID NUMBER	ROOM ACTIVITY	ROOM NUMBER	STATUS OR RECOMMENDATIONS	EPA FORM PREPARED
48-01-OPN-54	1ED11	LABORATORY	346	NO CHANGE	NO
RLW	1ED12	LABORATORY	346	NO CHANGE	
	1ED13	LABORATORY	346	NO CHANGE	
	1ED14	LABORATORY	346	NO CHANGE	
	1ED15	LABORATORY	346	NO CHANGE	
	1ED16	LABORATORY	346	NO CHANGE	
	1ED17	LABORATORY	346	NO CHANGE	
	1ED18	LABORATORY	346	NO CHANGE	
	1ED19	LABORATORY	346	NO CHANGE	
	1ED20	LABORATORY	346	NO CHANGE	
	1FD30	LABORATORY	314	NO CHANGE	
	1FD31	LABORATORY	313	NO CHANGE	
	1SD29	LABORATORY	315	NO CHANGE	
	1SD30	LABORATORY	314	NO CHANGE	
	1SD31	LABORATORY	313	NO CHANGE	
	1SD32	LABORATORY	311A	NO CHANGE	
	1SD33	LABORATORY	311	NO CHANGE	
	1SD34	LABORATORY	312	NO CHANGE	
	1SD35	LABORATORY	312B	NO CHANGE	
	1SD36	LABORATORY	310C	NO CHANGE	
	1SD37	LABORATORY	308B	NO CHANGE	
	1SD38	LABORATORY	606	NO CHANGE	
	1SD39	LABORATORY	606	NO CHANGE	
	1SD40	LABORATORY	606	NO CHANGE	
	1SD41	LABORATORY	606	NO CHANGE	
	1SD42	LABORATORY	606	NO CHANGE	
	1SD43	LABORATORY	606B	NO CHANGE	
	1SD44	LABORATORY	600	NO CHANGE	
	1SD45	LABORATORY	307B	NO CHANGE	
	1SD46	LABORATORY	307	NO CHANGE	
	1SD47	LABORATORY	310	NO CHANGE	
	1SD48	LABORATORY	308	NO CHANGE	
	1SD49	LABORATORY	306A	NO CHANGE	
	1SD50	LABORATORY	306	NO CHANGE	
	1SD51	LABORATORY	306	NO CHANGE	
	1SD52	LABORATORY	302	NO CHANGE	

TABLE 2: TA 48-1 DRAIN SUMMARY

OUTFALL NUMBER	ID NUMBER	ROOM ACTIVITY	ROOM NUMBER	STATUS OR RECOMMENDATIONS	EPA FORM PREPARED
48-01-OPN-54 RLW	1SD53	LABORATORY	305	NO CHANGE	NO
	1SD54	LABORATORY	303	NO CHANGE	
	1SD55	LABORATORY	305B	NO CHANGE	
	1SD56	LABORATORY	270	NO CHANGE	
	1SD57	LABORATORY	412B	NO CHANGE	
	1SD58	LABORATORY	412	NO CHANGE	
	1SD59	LABORATORY	409	NO CHANGE	
	1SD60	LABORATORY	413C	NO CHANGE	
	1SD61	LABORATORY	414B	NO CHANGE	
	1SD62	LABORATORY	416	NO CHANGE	
	1SD63	LABORATORY	414	NO CHANGE	
	1SD64	LABORATORY	413	NO CHANGE	
	1SD65	LABORATORY	416	NO CHANGE	
	1SD66	LABORATORY	408B	NO CHANGE	
	1SD67	LABORATORY	408	NO CHANGE	
	1SD68	LABORATORY	407	NO CHANGE	
	1SD69	LABORATORY	407B	NO CHANGE	
	1SD70	LABORATORY	410	NO CHANGE	
	BCD03	LABORATORY	55	NO CHANGE	
	BCD04	LABORATORY	55	NO CHANGE	
	BED24	LABORATORY	11A	NO CHANGE	
	BED25	MECHANICAL ROOM	11A	NO CHANGE	
	BED26	MECHANICAL ROOM	11A	NO CHANGE	
	BED27	LABORATORY	55	NO CHANGE	
	BED28	LABORATORY	55	NO CHANGE	
	BFD29	LASER LABORATORY	4	NO CHANGE	
	BFD30	LABORATORY	6	NO CHANGE	
	BFD31	LABORATORY	4C	NO CHANGE	
	BFD32	LABORATORY	11A	NO CHANGE	
	BFD33	MECHANICAL ROOM	11	NO CHANGE	
	BFD34	MECHANICAL ROOM	11	NO CHANGE	
	BFD35	MECHANICAL ROOM	11	NO CHANGE	
	BFD36	MACHINE SHOP	50	NO CHANGE	
	BFD37	LABORATORY	48	NO CHANGE	
	BFD38	MECHANICAL ROOM	68	NO CHANGE	
	BSD06	LABORATORY	48	NO CHANGE	

TABLE 2: TA 48-1 DRAIN SUMMARY

OUTFALL NUMBER	ID NUMBER	ROOM ACTIVITY	ROOM NUMBER	STATUS OR RECOMMENDATIONS	EPA FORM PREPARED
48-01-OPN-54 RLW	BSD07	LABORATORY	6	NO CHANGE	NO
	BSD08	LABORATORY	18A	NO CHANGE	
	BSD09	LABORATORY	19A	NO CHANGE	
	BSP04	LABORATORY	4B	NO CHANGE	
48-01-OPN-55	N/A	UNKNOWN	N/A	VERIFY/REMOVE	NO
48-01-OPN-56	N/A	PLUMBING VENT	N/A	NO CHANGE	NO
48-01-OPN-57	N/A	GAS VENT	N/A	NO CHANGE	NO
48-01-OPN-58	N/A	GAS VENT	N/A	NO CHANGE	NO
48-01-OPN-59	N/A	GAS VENT	N/A	NO CHANGE	NO
48-01-OPN-60	N/A	GAS VENT	N/A	NO CHANGE	NO
48-01-OPN-61	RD38	ROOF DRAIN	N/A	NO CHANGE	NO
48-01-OPN-62	N/A	PIPE STUB	N/A	REMOVE	NO
48-01-OPN-63	N/A	PIPE STUB	N/A	REMOVE	NO
48-01-OPN-64	N/A	FIRE SYSTEM	N/A	NOI	NO
48-01-OPN-65	N/A	FIRE SYSTEM	N/A	NOI	NO
48-01-OPN-66	N/A	RLW SUMP VENT	N/A	NO CHANGE	NO
48-01-OPN-67	N/A	NITROGEN TANK FILL LINE	N/A	NO CHANGE	NO
48-01-OPN-68	N/A	FIRE SYSTEM	N/A	NOI	NO
48-01-OPN-69	N/A	PIPE STUB	N/A	REMOVE	NO
48-01-OPN-70	N/A	PIPE STUB	N/A	REMOVE	NO
48-01-OPN-71	N/A	FIRE SYSTEM	N/A	NOI	NO
48-01-OPN-72	N/A	FIRE SYSTEM	N/A	NOI	NO
48-01-OPN-73	N/A	RLW SUMP VENT	N/A	NO CHANGE	NO
48-01-OPN-74	N/A	GAS VENT	N/A	NO CHANGE	NO
48-01-OPN-75	N/A	FIRE SYSTEM	N/A	NOI	NO
48-01-OPN-76	N/A	ROOF GUTTER	N/A	NO CHANGE	NO
48-01-OPN-77	N/A	ROOF CANALE	N/A	NO CHANGE	NO
48-01-OPN-78	N/A	FIRE SYSTEM	N/A	NOI	NO
48-01-OPN-79	N/A	ROOF GUTTER	N/A	NO CHANGE	NO
48-01-OPN-80	N/A	ROOF GUTTER	N/A	NO CHANGE	NO
48-01-OPN-81	N/A	ROOF GUTTER	N/A	NO CHANGE	NO
48-01-OPN-82	N/A	ROOF CANALE	N/A	NO CHANGE	NO
48-01-OPN-83	N/A	ROOF GUTTER	N/A	NO CHANGE	NO
48-01-OPN-84	N/A	FIRE SYSTEM	N/A	NOI	NO
48-01-OPN-85	N/A	FIRE SYSTEM	N/A	NOI	NO
48-01-OPN-86	N/A	ROOF GUTTER	N/A	NO CHANGE	NO

TABLE 2: TA 48-1 DRAIN SUMMARY

OUTFALL NUMBER	ID NUMBER	ROOM ACTIVITY	ROOM NUMBER	STATUS OR RECOMMENDATIONS	EPA FORM PREPARED
48-01-OPN-87	N/A	PIPE STUB	N/A	REMOVE	NO
48-01-OPN-88	N/A	GAS CONNECTION	N/A	NO CHANGE	NO
48-01-OPN-89	N/A	A/C CONDENSATE	N/A	NOI	NO
48-01-OPN-90	N/A	A/C CONDENSATE	N/A	NOI	NO
48-01-OPN-91	N/A	PIPE STUB	N/A	REMOVE	NO

TABLE 3: TA 48-2 DRAIN SUMMARY

OUTFALL NUMBER	ID NUMBER	ROOM ACTIVITY	ROOM NUMBER	STATUS OR RECOMMENDATIONS	EPA FORM PREPARED
48-02-OPN-01 SANITARY	1FD01	GUARD STATION	N/A	NO CHANGE	NO
	1LV01	GUARD STATION	N/A	NO CHANGE	
	1TL01	GUARD STATION	N/A	NO CHANGE	
	1WF01	GUARD STATION	N/A	NO CHANGE	
48-02-OPN-02	N/A	WATER HEATER PRV	N/A	NOI	NO

TABLE 4: TA 48-8 DRAIN SUMMARY

OUTFALL NUMBER	ID NUMBER	ROOM ACTIVITY	ROOM NUMBER	STATUS OR RECOMMENDATIONS	EPA FORM PREPARED
48-08-OPN-01 DAYLIGHT	1WF01	LASER LAB	N/A	REPIPE TO S.S./REMOVE	YES
48-08-OPN-02 DAYLIGHT	1SD01	LASER LAB	N/A	REPIPE TO S.S./REMOVE	YES
48-08-OPN-03	N/A	WATER HEATER PRV	N/A	NOI	NO
48-08-OPN-04 04A126	N/A	NON-CONTACT COOLING WATER	N/A	REMOVE	YES
48-08-OPN-05	N/A	WATER SERVICE	N/A	NO CHANGE	NO
48-08-OPN-06	N/A	ABANDONED PIPE STUB	N/A	REMOVE	NO
48-08-OPN-07	N/A	A/C CONDENSATE	N/A	NOI	NO
48-08-OPN-08	N/A	A/C CONDENSATE	N/A	NOI	NO
48-08-OPN-09	N/A	AIR COMPRESSOR DRAIN	N/A	CONTAINERIZE	NO
48-08-OPN-10	N/A	BACK FLOW PREVENTOR	N/A	NOI	NO
48-08-OPN-11	N/A	ROOF GUTTER DRAIN	N/A	NO CHANGE	NO
48-08-OPN-12	N/A	FIRE WATER DRAIN	N/A	NOI	NO
48-08-OPN-13	N/A	FIRE WATER DRAIN	N/A	NOI	NO
48-08-OPN-14	N/A	FIRE WATER DRAIN	N/A	NOI	NO
48-08-OPN-15	N/A	FIRE WATER DRAIN	N/A	NOI	NO

TABLE 5: TA 48-17 DRAIN SUMMARY

OUTFALL NUMBER	ID NUMBER	ROOM ACTIVITY	ROOM NUMBER	STATUS OR RECOMMENDATIONS	EPA FORM PREPARED
48-17-OPN-01 SANITARY	1CD01	CLEAN ROOM	102	REMOVED	NO
	1ED01	CLEAN ROOM	102	LABEL	
	1FD01	CLEAN ROOM	102	PLUG	
	1FD02	SHOP	100-A	PLUG	
	1LV01	RESTROOM	100-A	NO CHANGE	
	1SD01	JANITOR'S CLOSET	100-A	LABEL	
	1SD02	SHOP	100-A	LABEL	
	1TL01	RESTROOM	100-A	NO CHANGE	
48-17-OPN-02	N/A	FIRE WATER DRAIN	N/A	NOI	NO
48-17-OPN-03	N/A	A/C CONDENSATE DRAIN	N/A	NOI	NO
48-17-OPN-04	N/A	A/C CONDENSATE DRAIN	N/A	NOI	NO
48-17-OPN-05	N/A	N2 TANK FILL	N/A	NO CHANGE	NO
48-17-OPN-06	N/A	N2 TANK PRV	N/A	NO CHANGE	NO
48-17-OPN-07	N/A	N2 TO BLDG	N/A	NO CHANGE	NO
48-17-OPN-08	N/A	PIPE STUB	N/A	NO CHANGE	NO
NONE (SINK DRAINS TO CARBOY)	1SD03	SHOP	100-A	NO CHANGE	NO

TABLE 6: TA 48-28 DRAIN SUMMARY

OUTFALL NUMBER	ID NUMBER	ROOM ACTIVITY	ROOM NUMBER	STATUS OR RECOMMENDATIONS	EPA FORM PREPARED
48-28-OPN-01 SANITARY	1FD01	SHOP	109	PLUG	NO
	1FD02	RESTROOM	104	NO CHANGE	
	1FD03	LASER LAB	107	PLUG	
	1FD04	LASER LAB	107	PLUG	
	1FS01	OFFICE	101	PLUG	
	1FS02	SHOP	109	PLUG	
	1FS03	EQUIPMENT ROOM	105	CONTAINERIZE	
	1LV01	REST ROOM	104	NO CHANGE	
	1SD01	OFFICE	101	LABEL	
	1SD02	SHOP	109	LABEL	
	1SD03	JANITOR'S CLOSET	111	LABEL	
	1SD04	LASER LAB	107	LABEL	
	1TL01	REST ROOM	104	NO CHANGE	
	1UR01	REST ROOM	104	NO CHANGE	
	1WF01	CORRIDOR	N/A	NO CHANGE	
48-28-OPN-02 04A152	1ED01	LASER	107	RECIRCULATE	YES
48-28-OPN-03	N/A	FIRE WATER DRAIN	N/A	NOI	NO
48-28-OPN-04	N/A	FIRE WATER DRAIN	N/A	NOI	NO
48-28-OPN-05	N/A	FIRE WATER DRAIN	N/A	NOI	NO
48-28-OPN-06	N/A	N2 TANK DRAIN	N/A	NO CHANGE	NO
48-28-OPN-07	N/A	N2 TANK PRV	N/A	NO CHANGE	NO
48-28-OPN-08	N/A	N2 TANK DRAIN	N/A	NO CHANGE	NO
48-28-OPN-09	N/A	N2 TANK FILL	N/A	NO CHANGE	NO

TABLE 7: TA 48-29 DRAIN SUMMARY

OUTFALL NUMBER	ID NUMBER	ROOM ACTIVITY	ROOM NUMBER	STATUS OR RECOMMENDATIONS	EPA FORM PREPARED
48-29-OPN-01 SANITARY	1LV01	REST ROOM	105	NO CHANGE	NO
	1LV02	REST ROOM	111	NO CHANGE	
	1SD01	JANITOR CLOSET	107	LABEL	
	1SD02	BREAK ROOM	116	LABEL	
	1SH01	REST ROOM	105	NO CHANGE	
	1TL01	REST ROOM	105	NO CHANGE	
	1TL02	REST ROOM	111	NO CHANGE	
	1UR01	REST ROOM	111	NO CHANGE	
	1WF01	CORRIDOR	N/A	NO CHANGE	
48-29-OPN-02	N/A	STORM WATER	N/A	NO CHANGE	NO
48-29-OPN-03	N/A	STORM WATER	N/A	NO CHANGE	NO
48-29-OPN-04	N/A	EVAPORATIVE COOLER DRAIN	N/A	NOI	NO
48-29-OPN-05	N/A	EVAPORATIVE COOLER DRAIN	N/A	NOI	NO
48-29-OPN-06	N/A	WATER HEATER PRV	N/A	NOI	NO

TABLE 8: TA 48-30 DRAIN SUMMARY

OUTFALL NUMBER	ID NUMBER	ROOM ACTIVITY	ROOM NUMBER	STATUS OR RECOMMENDATIONS	EPA FORM PREPARED
48-30-OPN-01	N/A	A/C CONDENSATE DRAIN	N/A	NOI	NO

TABLE 9: TA 48-34 DRAIN SUMMARY

OUTFALL NUMBER	ID NUMBER	ROOM ACTIVITY	ROOM NUMBER	STATUS OR RECOMMENDATIONS	EPA FORM PREPARED
48-34-OPN-01 SANITARY	1FS01	JANITOR CLOSET	N/A	NO CHANGE	NO
	1LV01	REST ROOM	110	NO CHANGE	
	1LV02	REST ROOM	108	NO CHANGE	
	1SD01	CORRIDOR	N/A	LABEL	
	1SH01	REST ROOM	110	NO CHANGE	
	1TL01	REST ROOM	110	NO CHANGE	
	1TL02	REST ROOM	108	NO CHANGE	
	1UR01	REST ROOM	110	NO CHANGE	
	1WF01	CORRIDOR	N/A	NO CHANGE	
48-34-OPN-02	N/A	EVAPORATIVE COOLER DRAIN	N/A	NOI	NO
48-34-OPN-03	N/A	EVAPORATIVE COOLER DRAIN	N/A	NOI	NO
48-34-OPN-04	N/A	STORM WATER	N/A	NO CHANGE	NO
48-34-OPN-05	N/A	STORM WATER	N/A	NO CHANGE	NO

TABLE 10: TA 48-45 DRAIN SUMMARY

OUTFALL NUMBER	ID NUMBER	ROOM ACTIVITY	ROOM NUMBER	STATUS OR RECOMMENDATIONS	EPA FORM PREPARED
48-45-OPN-01 SANITARY	1FD01	MECHANICAL ROOM	N105	NO CHANGE	NO
	1FD02	MECHANICAL ROOM	N105	NO CHANGE	
	1FD03	MECHANICAL ROOM	N105A	NO CHANGE	
	1FD04	MECHANICAL ROOM	N105A	NO CHANGE	
	1FD05	MECHANICAL ROOM	N105A	NO CHANGE	
48-45-OPN-02 SANITARY	1LV01	REST ROOM	107	NO CHANGE	NO
	1LV02	REST ROOM	107	NO CHANGE	
	1LV03	REST ROOM	S103	NO CHANGE	
	1LV04	REST ROOM	S103	NO CHANGE	
	1SD07	LAB	S101	LABEL	
	1SD45	JANITOR CLOSET	N/A	LABEL	
	1SH01	REST ROOM	S105	NO CHANGE	
	1SH02	REST ROOM	S105	NO CHANGE	
	1SH03	REST ROOM	S105	NO CHANGE	
	1SH04	REST ROOM	S105	NO CHANGE	
	1TL01	REST ROOM	107	NO CHANGE	
	1TL02	REST ROOM	107	NO CHANGE	
	1TL03	REST ROOM	S103	NO CHANGE	

TABLE 10: TA 48-45 DRAIN SUMMARY

OUTFALL NUMBER	ID NUMBER	ROOM ACTIVITY	ROOM NUMBER	STATUS OR RECOMMENDATIONS	EPA FORM PREPARED
48-45-OPN-02 SANITARY	1TL04	REST ROOM	S103	NO CHANGE	NO
	1UR01	REST ROOM	S103	NO CHANGE	
	1UR02	REST ROOM	S103	NO CHANGE	
	1WF02	CORRIDOR	N/A	NO CHANGE	
48-45-OPN-03 RLW	1AD01	LAB	EXT	MODIFY/COVER	NO
	1CD01	LAB	E107	NO CHANGE	
	1CD02	LAB	E102	NO CHANGE	
	1CD03	LAB	E102	NO CHANGE	
	1EEW01	LAB	E100B	NO CHANGE	
	1EEW02	LAB	E106	NO CHANGE	
	1EEW03	LAB	E104	NO CHANGE	
	1EEW04	LAB	E107	NO CHANGE	
	1FD06	LAB	N101	NO CHANGE	
	1FD07	LAB	E117	NO CHANGE	
	1FD08	LAB	E100B	NO CHANGE	
	1FD09	LAB	E102	NO CHANGE	
	1FD10	CORRIDOR	E101A	NO CHANGE	
	1FD11	CORRIDOR	N/A	NO CHANGE	
	1SD01	LAB	W106	NO CHANGE	
	1SD02	LAB	W106	NO CHANGE	
	1SD03	LAB	W108	NO CHANGE	
	1SD04	LAB	W108	NO CHANGE	
	1SD05	LAB	W110	NO CHANGE	
	1SD06	LAB	W110	NO CHANGE	
	1SD08	LAB	E101A	NO CHANGE	
	1SD09	LAB	E101A	NO CHANGE	
	1SD10	LAB	E101A	NO CHANGE	
	1SD11	LAB	E101A	NO CHANGE	
	1SD12	LAB	N/A	NO CHANGE	
	1SD13	LAB	E107	NO CHANGE	
	1SD14	LAB	E105	NO CHANGE	
	1SD15	LAB	E105	NO CHANGE	
	1SD16	LAB	E109	NO CHANGE	
	1SD17	LAB	E111	NO CHANGE	
	1SD18	LAB	E113	NO CHANGE	
	1SD19	LAB	E115	NO CHANGE	

TABLE 10: TA 48-45 DRAIN SUMMARY

OUTFALL NUMBER	ID NUMBER	ROOM ACTIVITY	ROOM NUMBER	STATUS OR RECOMMENDATIONS	EPA FORM PREPARED
48-45-OPN-03 RLW	1SD20	LAB	E115	NO CHANGE	NO
	1SD21	LAB	E117	NO CHANGE	
	1SD22	LAB	E117	NO CHANGE	
	1SD23	LAB	W101	NO CHANGE	
	1SD24	LAB	W101	NO CHANGE	
	1SD25	LAB	E117	NO CHANGE	
	1SD26	LAB	E117	NO CHANGE	
	1SD27	LAB	N102	NO CHANGE	
	1SD28	LAB	N109	NO CHANGE	
	1SD29	LAB	N106	NO CHANGE	
	1SD30	LAB	N111	NO CHANGE	
	1SD31	LAB	N113	NO CHANGE	
	1SD32	LAB	E106A	NO CHANGE	
	1SD33	LAB	E106B	NO CHANGE	
	1SD34	LAB	E106A	NO CHANGE	
	1SD35	LAB	E106B	NO CHANGE	
	1SD36	LAB	E106A	NO CHANGE	
	1SD37	LAB	E106B	NO CHANGE	
	1SD38	LAB	E104A	NO CHANGE	
	1SD39	LAB	E104B	NO CHANGE	
	1SD40	LAB	E104A	NO CHANGE	
	1SD41	LAB	E104B	NO CHANGE	
	1SD42	LAB	E104A	NO CHANGE	
	1SD43	LAB	E104B	NO CHANGE	
	1SD44	LAB	E102	NO CHANGE	
48-45-OPN-04	N/A	FIRE WATER DRAIN	N/A	NOI	NO
48-45-OPN-05	N/A	FIRE WATER DRAIN	N/A	NOI	NO
48-45-OPN-06	N/A	A/C CONDENSATE DRAIN	N/A	NOI	NO
48-45-OPN-07	N/A	A/C CONDENSATE DRAIN	N/A	NOI	NO
48-45-OPN-08	N/A	A/C CONDENSATE DRAIN	N/A	NOI	NO
48-45-OPN-09	N/A	A/C CONDENSATE DRAIN	N/A	NOI	NO
48-45-OPN-10	RD13	ROOF	N/A	NO CHANGE	NO
48-45-OPN-11 DAYLIGHT	RD11	ROOF	N/A	NO CHANGE	NO
	RD12	ROOF	N/A	NO CHANGE	
48-45-OPN-12 DAYLIGHT	RD09	ROOF	N/A	NO CHANGE	NO
	RD10	ROOF	N/A	NO CHANGE	

TABLE 10: TA 48-45 DRAIN SUMMARY

OUTFALL NUMBER	ID NUMBER	ROOM ACTIVITY	ROOM NUMBER	STATUS OR RECOMMENDATIONS	EPA FORM PREPARED
48-45-OPN-13 DAYLIGHT	RD06	ROOF	N/A	NO CHANGE	NO
	RD07	ROOF	N/A	NO CHANGE	
	RD08	ROOF	N/A	NO CHANGE	
48-45-OPN-14 DAYLIGHT	RD04	ROOF	N/A	NO CHANGE	NO
	RD05	ROOF	N/A	NO CHANGE	
48-45-OPN-15	RD03	ROOF	N/A	NO CHANGE	NO
48-45-OPN-16 DAYLIGHT	RD01	ROOF	N/A	NO CHANGE	
	RD02	ROOF	N/A	NO CHANGE	
48-45-OPN-17 DAYLIGHT	RD14	ROOF	N/A	NO CHANGE	NO
	RD15	ROOF	N/A	NO CHANGE	
48-45-OPN-18	N/A	STORM WATER	N/A	NO CHANGE	NO
48-45-OPN-19	N/A	STORM WATER	N/A	NO CHANGE	NO
48-45-OPN-20	N/A	STORM WATER	N/A	NO CHANGE	NO
48-45-OPN-21	N/A	STORM WATER	N/A	NO CHANGE	NO
48-45-OPN-22	N/A	STORM WATER	N/A	NO CHANGE	NO
48-45-OPN-23	N/A	STORM WATER	N/A	NO CHANGE	NO
48-45-OPN-24	N/A	STORM WATER	N/A	NO CHANGE	NO
48-45-OPN-25	N/A	STORM WATER	N/A	NO CHANGE	NO
48-45-OPN-26	N/A	STORM WATER	N/A	NO CHANGE	NO
48-45-OPN-27	N/A	STORM WATER	N/A	NO CHANGE	NO
48-45-OPN-28	N/A	STORM WATER	N/A	NO CHANGE	NO
48-45-OPN-29	N/A	STORM WATER	N/A	NO CHANGE	NO
48-45-OPN-30	N/A	STORM WATER	N/A	NO CHANGE	NO
48-45-OPN-31	N/A	STORM WATER	N/A	NO CHANGE	NO
48-45-OPN-32	N/A	STORM WATER	N/A	NO CHANGE	NO
48-45-OPN-33	N/A	N2 TANK DRAIN	N/A	NO CHANGE	NO
48-45-OPN-34	N/A	N2 TANK PRV	N/A	NO CHANGE	NO
48-45-OPN-35	N/A	N2 TANK FILL	N/A	NO CHANGE	NO
NONE (DRAINS	1WF01	CORRIDOR	N/A	NO CHANGE	NO
OT CONNECTE	1WF03	CORRIDOR	N/A	NO CHANGE	NO

TABLE 11: TA 48-46 DRAIN SUMMARY

OUTFALL NUMBER	ID NUMBER	ROOM ACTIVITY	ROOM NUMBER	STATUS OR RECOMMENDATIONS	EPA FORM PREPARED
48-46-OPN-01 SANITARY	1WF02	CORRIDOR	N/A	NO CHANGE	NO
48-46-OPN-02 04A137	1SD02	LAB (NOT ACTIVE)	N/A	REPIPE TO S.S./REMOVE	NO
	1SD03	LAB (NOT ACTIVE)	N/A	REPIPE TO S.S./REMOVE	
48-46-OPN-03	N/A	A/C AND WATER HEATER	N/A	NOI	NO
48-46-OPN-04	N/A	WATER HEATER PRV	N/A	NOI	NO
48-46-OPN-05	N/A	A/C CONDENSATE DRAIN	N/A	NOI	NO
48-46-OPN-06	N/A	A/C CONDENSATE DRAIN	N/A	NOI	NO
48-46-OPN-07	N/A	A/C CONDENSATE DRAIN	N/A	NOI	NO

TABLE 12: TA 48-47 DRAIN SUMMARY

OUTFALL NUMBER	ID NUMBER	ROOM ACTIVITY	ROOM NUMBER	STATUS OR RECOMMENDATIONS	EPA FORM PREPARED
48-47-OPN-01 SANITARY	1FS01	JANITOR CLOSET	N/A	NO CHANGE	NO
	1LV01	REST ROOM	N/A	NO CHANGE	
	1LV02	REST ROOM	N/A	NO CHANGE	
	1SD01	BREAK ROOM	N/A	LABEL	
	1SH01	REST ROOM	N/A	NO CHANGE	
	1TL01	REST ROOM	N/A	NO CHANGE	
	1TL02	REST ROOM	N/A	NO CHANGE	
	1UR01	REST ROOM	N/A	NO CHANGE	
	1WF01	CORRIDOR	N/A	NO CHANGE	
48-47-OPN-02	N/A	EVAPORATIVE COOLER DRAIN	N/A	NOI	NO
48-47-OPN-03	N/A	EVAPORATIVE COOLER DRAIN	N/A	NOI	NO

TABLE 13: TA 48-56 DRAIN SUMMARY

OUTFALL NUMBER	ID NUMBER	ROOM ACTIVITY	ROOM NUMBER	STATUS OR RECOMMENDATIONS	EPA FORM PREPARED
48-56-OPN-01 SANITARY	1FS01	JANITOR CLOSET	100E	NO CHANGE	NO
	1LV01	REST ROOM	111	NO CHANGE	
	1LV02	REST ROOM	113	NO CHANGE	
	1SH01	REST ROOM	113	NO CHANGE	
	1TL01	REST ROOM	111	NO CHANGE	
	1TL02	REST ROOM	113	NO CHANGE	
	1WF01	CORRIDOR	N/A	NO CHANGE	
48-56-OPN-02	N/A	STORM WATER	N/A	NO CHANGE	NO

TABLE 14: TA 48-57 DRAIN SUMMARY

OUTFALL NUMBER	ID NUMBER	ROOM ACTIVITY	ROOM NUMBER	STATUS OR RECOMMENDATIONS	EPA FORM PREPARED
48-57-OPN-01 SANITARY	1DW01	BREAK ROOM	102	NO CHANGE	NO
	1SD01	BREAK ROOM	102	LABEL	
	1SD02	BREAK ROOM	102	LABEL	
48-57-OPN-02	N/A	EVAPORATIVE COOLER DRAIN	N/A	NOI	NO
48-57-OPN-03	N/A	WATER HEATER PRV	N/A	NOI	NO
48-57-OPN-04	N/A	STORM WATER	N/A	NO CHANGE	NO

TABLE 15: NON DRAIN RECOMMENDATIONS

TECHNICAL AREA	BUILDING NUMBER	ROOM OR LOCATION	RECOMMENDATION
48	1	N/A	DELETE PERMIT 04A016
48	1	N/A	DELETE PERMIT 03A045
48	1	N/A	DELETE PERMIT 04A153
48	1	246	IMPLEMENT SPCC FOR UNUSED RLW TANK
48	1	N/A	DELETE PERMIT 04A131
48	8	N/A	DELETE PERMIT 04A126
48	8	N/A	REMOVE "OLD" 04A126 SIGN
48	28	N/A	DELETE PERMIT 04A152
48	45	N/A	REMOVE 1WF1 AND 1WF3
48	46	N/A	DELETE PERMIT 04A137

REPORT # 76

TA	BLDG	OUTLET PIPING NO	EPA OUTFALL #	DRAIN #	ROOM #	ROOM DESCRIPTION	FLOW RATE		PERIODICITY	SEASONAL	SOURCE TYPES
48	1	48-01-OPN-01	RLW	1CD01	326	LABORATORY			FLOW IS NIL	No	FUME HOOD CUP DRAIN
48	1	48-01-OPN-01	RLW	1ED21	326	SHOP			FLOW IS NIL	No	UNKNOWN
48	1	48-01-OPN-01	RLW	1FD01	334	HOT CELLS			FLOW IS NIL	No	FLOOR WASHINGS
48	1	48-01-OPN-01	RLW	1FD02	334	HOT CELLS			FLOW IS NIL	No	FLOOR WASHINGS
48	1	48-01-OPN-01	RLW	1FD03	334	HOT CELLS			FLOW IS NIL	No	FLOOR WASHINGS
48	1	48-01-OPN-01	RLW	1FD04	334	HOT CELLS			FLOW IS NIL	No	FLOOR WASHINGS
48	1	48-01-OPN-01	RLW	1FD05	342	LABORATORY			FLOW IS NIL	No	FLOOR WASHINGS
48	1	48-01-OPN-01	RLW	1FD06	332	LABORATORY			FLOW IS NIL	No	FLOOR WASHINGS
48	1	48-01-OPN-01	RLW	1FD07	330	LABORATORY			FLOW IS NIL	No	FLOOR WASHINGS
48	1	48-01-OPN-01	RLW	1FD08	326	LABORATORY			FLOW IS NIL	No	FLOOR WASHINGS
48	1	48-01-OPN-01	RLW	1FD09	321	LABORATORY			FLOW IS NIL	No	FLOOR WASHINGS
48	1	48-01-OPN-01	RLW	1SD01	334	HOT CELLS			5 DAYS PER WEEK	No	LAB SINK
48	1	48-01-OPN-01	RLW	1SD02	334	HOT CELLS			5 DAYS PER WEEK	No	LAB SINK
48	1	48-01-OPN-01	RLW	1SD03	339A	LABORATORY			5 DAYS PER WEEK	No	LAB SINK
48	1	48-01-OPN-01	RLW	1SD04	339B	LABORATORY			5 DAYS PER WEEK	No	LAB SINK
48	1	48-01-OPN-01	RLW	1SD05	339C	LABORATORY			5 DAYS PER WEEK	No	LAB SINK
48	1	48-01-OPN-01	RLW	1SD06	339D	LABORATORY			5 DAYS PER WEEK	No	LAB SINK
48	1	48-01-OPN-01	RLW	1SD07	332	LABORATORY			5 DAYS PER WEEK	No	LAB SINK
48	1	48-01-OPN-01	RLW	1SD08	342	LABORATORY			5 DAYS PER WEEK	No	NONE (REMOVED)
48	1	48-01-OPN-01	RLW	1SD09	330	LABORATORY			5 DAYS PER WEEK	No	LAB SINK
48	1	48-01-OPN-01	RLW	1SD10	338	LABORATORY			5 DAYS PER WEEK	No	LAB SINK
48	1	48-01-OPN-01	RLW	1SD11	338	LABORATORY			5 DAYS PER WEEK	No	LAB SINK
48	1	48-01-OPN-01	RLW	1SD12	326	LABORATORY			5 DAYS PER WEEK	No	LAB SINK
48	1	48-01-OPN-01	RLW	1SD13	321	LABORATORY			5 DAYS PER WEEK	No	LAB SINK
48	1	48-01-OPN-01	RLW	1SD14	330	LABORATORY			5 DAYS PER WEEK	No	LAB SINK
48	1	48-01-OPN-01	RLW	BSP1	246	BOILER ROOM			NO FLOW	No	NONE (NOT USED)
48	1	48-01-OPN-02	04A016	EED01	4	LASER LAB	6.5	GPM	7 DAYS/WEEK	No	MAGNET COOLING WATER
48	1	48-01-OPN-02	04A016	EED02	4	LASER LAB			OCCASSIONAL	No	LASER COOLING WATER
48	1	48-01-OPN-03	13S/SWSC	1CW01	348	LAUNDRY			5 DAYS PER WEEK	No	CLOTHES WASHER
48	1	48-01-OPN-03	13S/SWSC	1FD10	338	LABORATORY			FLOW IS NIL	No	FLOOR WASHINGS
48	1	48-01-OPN-03	13S/SWSC	1FD11	338	LABORATORY			FLOW IS NIL	No	FLOOR WASHINGS
48	1	48-01-OPN-03	13S/SWSC	1FD12	338	LABORATORY			FLOW IS NIL	No	FLOOR WASHINGS
48	1	48-01-OPN-03	13S/SWSC	1FD13	326	RESTROOM			FLOW IS NIL	No	FLOOR WASHINGS

REPORT # 76

TA	BLDG	OUTLET PIPING NO	EPA OUTFALL #	DRAIN #	ROOM #	ROOM DESCRIPTION	FLOW RATE		PERIODICITY	SEASONAL	SOURCE TYPES
48	1	48-01-OPN-03	13S/SWSC	1FD14	130	RESTROOM			FLOW IS NIL	No	FLOOR WASHINGS
48	1	48-01-OPN-03	13S/SWSC	1FD15	104A	RESTROOM			FLOW IS NIL	No	FLOOR WASHINGS
48	1	48-01-OPN-03	13S/SWSC	1FD16	300A	RESTROOM			FLOW IS NIL	No	FLOOR WASHINGS
48	1	48-01-OPN-03	13S/SWSC	1FS01	114	JANITOR'S CLOSET			5 DAYS PER WEEK	No	MOP WATER
48	1	48-01-OPN-03	13S/SWSC	1LV01	336	RESTROOM			5 DAYS PER WEEK	No	LAVATORY
48	1	48-01-OPN-03	13S/SWSC	1LV02	328	RESTROOM			5 DAYS PER WEEK	No	LAVATORY
48	1	48-01-OPN-03	13S/SWSC	1LV03	318	RESTROOM			5 DAYS PER WEEK	No	LAVATORY
48	1	48-01-OPN-03	13S/SWSC	1LV04	317	RESTROOM			5 DAYS PER WEEK	No	LAVATORY
48	1	48-01-OPN-03	13S/SWSC	1LV05	104A	RESTROOM			5 DAYS PER WEEK	No	LAVATORY
48	1	48-01-OPN-03	13S/SWSC	1LV06	104A	RESTROOM			5 DAYS PER WEEK	No	LAVATORY
48	1	48-01-OPN-03	13S/SWSC	1LV07	300A	RESTROOM			5 DAYS PER WEEK	No	LAVATORY
48	1	48-01-OPN-03	13S/SWSC	1LV08	300A	RESTROOM			5 DAYS PER WEEK	No	LAVATORY
48	1	48-01-OPN-03	13S/SWSC	1LV09	300A	RESTROOM			5 DAYS PER WEEK	No	LAVATORY
48	1	48-01-OPN-03	13S/SWSC	1SD15	N/A	JANITOR'S CLOSET			5 DAYS PER WEEK	No	MOP WATER
48	1	48-01-OPN-03	13S/SWSC	1SD16	N/A	JANITOR'S CLOSET			5 DAYS PER WEEK	No	MOP WATER
48	1	48-01-OPN-03	13S/SWSC	1SD17	114	JANITOR'S CLOSET			5 DAYS PER WEEK	No	MOP WATER
48	1	48-01-OPN-03	13S/SWSC	1SD18	371	JANITOR'S CLOSET			5 DAYS PER WEEK	No	MOP WATER
48	1	48-01-OPN-03	13S/SWSC	1SH01	328	RESTROOM			5 DAYS PER WEEK	No	SHOWER
48	1	48-01-OPN-03	13S/SWSC	1SH02	318	RESTROOM			5 DAYS PER WEEK	No	SHOWER
48	1	48-01-OPN-03	13S/SWSC	1SH03	317	RESTROOM			5 DAYS PER WEEK	No	SHOWER
48	1	48-01-OPN-03	13S/SWSC	1SH04	104B	RESTROOM			5 DAYS PER WEEK	No	SHOWER
48	1	48-01-OPN-03	13S/SWSC	1SH05	300B	RESTROOM			5 DAYS PER WEEK	No	SHOWER
48	1	48-01-OPN-03	13S/SWSC	1TL01	336	RESTROOM			5 DAYS PER WEEK	No	TOILET
48	1	48-01-OPN-03	13S/SWSC	1TL02	328	RESTROOM			5 DAYS PER WEEK	No	TOILET
48	1	48-01-OPN-03	13S/SWSC	1TL03	318A	RESTROOM			5 DAYS PER WEEK	No	TOILET
48	1	48-01-OPN-03	13S/SWSC	1TL04	317	RESTROOM			5 DAYS PER WEEK	No	TOILET
48	1	48-01-OPN-03	13S/SWSC	1TL05	104A	RESTROOM			5 DAYS PER WEEK	No	TOILET
48	1	48-01-OPN-03	13S/SWSC	1TL06	104A	RESTROOM			5 DAYS PER WEEK	No	TOILET
48	1	48-01-OPN-03	13S/SWSC	1TL07	300A	RESTROOM			5 DAYS PER WEEK	No	TOILET
48	1	48-01-OPN-03	13S/SWSC	1TL08	300A	RESTROOM			5 DAYS PER WEEK	No	TOILET
48	1	48-01-OPN-03	13S/SWSC	1TL09	300A	RESTROOM			5 DAYS PER WEEK	No	TOILET
48	1	48-01-OPN-03	13S/SWSC	1UR01	328	RESTROOM			5 DAYS PER WEEK	No	URINAL
48	1	48-01-OPN-03	13S/SWSC	1WF1	330	LABORATORY			5 DAYS PER WEEK	No	DRINKING FOUNTAIN

REPORT # 76

TA	BLDG	OUTLET PIPING NO	EPA OUTFALL #	DRAIN #	ROOM #	ROOM DESCRIPTION	FLOW RATE		PERIODICITY	SEASONAL	SOURCE TYPES
48	1	48-01-OPN-03	13S/SWSC	1WF2	348	LABORATORY			5 DAYS PER WEEK	No	DRINKING FOUNTAIN
48	1	48-01-OPN-03	13S/SWSC	1WF3	N/A	CORRIDOR			5 DAYS PER WEEK	No	DRINKING FOUNTAIN
48	1	48-01-OPN-03	13S/SWSC	1WF4	338	LABORATORY			5 DAYS PER WEEK	No	DRINKING FOUNTAIN
48	1	48-01-OPN-03	13S/SWSC	1WF5	107B	LABORATORY			5 DAYS PER WEEK	No	DRINKING FOUNTAIN
48	1	48-01-OPN-03	13S/SWSC	2FD1	500	PENTHOUSE			FLOW IS NIL	No	AIR HANDLER CONDENSATE
48	1	48-01-OPN-03	13S/SWSC	2FD1	500	PENTHOUSE			FLOW IS NIL	No	STEAM CONDENSATE
48	1	48-01-OPN-03	13S/SWSC	2FD1	500	PENTHOUSE			FLOW IS NIL	No	STEAM PRV
48	1	48-01-OPN-03	13S/SWSC	2FD2	500	PENTHOUSE			FLOW IS NIL	No	HEATING COIL DRAIN
48	1	48-01-OPN-03	13S/SWSC	2FD2	500	PENTHOUSE			FLOW IS NIL	No	AIR HANDLER CONDENSATE
48	1	48-01-OPN-03	13S/SWSC	2FD3	500	PENTHOUSE			FLOW IS NIL	No	FLOOR WASHINGS
48	1	48-01-OPN-03	13S/SWSC	2FD4	500	PENTHOUSE			FLOW IS NIL	No	WATER SYSTEM DRAIN
48	1	48-01-OPN-03	13S/SWSC	2FD4	500	PENTHOUSE			FLOW IS NIL	No	D.I. WATER
48	1	48-01-OPN-03	13S/SWSC	2FD5	500	PENTHOUSE			FLOW IS NIL	No	HEATING COIL DRAIN
48	1	48-01-OPN-03	13S/SWSC	2FD5	500	PENTHOUSE			FLOW IS NIL	No	AIR HANDLER CONDENSATE
48	1	48-01-OPN-03	13S/SWSC	2FD6	500	PENTHOUSE			FLOW IS NIL	No	HEATING COIL DRAIN
48	1	48-01-OPN-03	13S/SWSC	2FD6	500	PENTHOUSE			FLOW IS NIL	No	AIR HANDLER CONDENSATE
48	1	48-01-OPN-03	13S/SWSC	BLV1	47	RESTROOM			5 DAYS PER WEEK	No	LAVATORY
48	1	48-01-OPN-03	13S/SWSC	BSD1	1	JANITOR'S CLOSET			5 DAYS PER WEEK	No	MOP WATER
48	1	48-01-OPN-03	13S/SWSC	BSD2	48	LOUNGE			5 DAYS PER WEEK	No	MOP WATER
48	1	48-01-OPN-03	13S/SWSC	BTL1	47	RESTROOM			5 DAYS PER WEEK	No	TOILET
48	1	48-01-OPN-03	13S/SWSC	BWF1	N/A	CORRIDOR			5 DAYS PER WEEK	No	WATER FOUNTAIN
48	1	48-01-OPN-04	03A045	BCD01	26	ELECTRICAL ROOM			5 DAYS PER WEEK	No	CUP SINK DRAIN
48	1	48-01-OPN-04	03A045	BCD02	42	BOILER ROOM			5 DAYS PER WEEK	No	CUP SINK DRAIN
48	1	48-01-OPN-04	03A045	BED03	11	MECHANICAL ROOM			5 DAYS PER WEEK	No	TRITRIUM SOURCE
48	1	48-01-OPN-04	03A045	BED04	19A	LABORATORY			5 DAYS PER WEEK	No	BACK FLOW PREVENTER
48	1	48-01-OPN-04	03A045	BED05	50	MACHINE SHOP			NO FLOW	No	NONE
48	1	48-01-OPN-04	03A045	BED06	56	STORAGE			NO FLOW	No	NONE
48	1	48-01-OPN-04	03A045	BED07	56	STORAGE			NO FLOW	No	NONE
48	1	48-01-OPN-04	03A045	BED08	56	STORAGE			NO FLOW	No	NONE
48	1	48-01-OPN-04	03A045	BED09	21	EQUIPMENT ROOM			FLOW IS NIL	No	BACK FLOW PREVENTER
48	1	48-01-OPN-04	03A045	BED10	21	EQUIPMENT ROOM			FLOW IS NIL	No	CONDENSATE TANK DRAIN
48	1	48-01-OPN-04	03A045	BED11	42	BOILER ROOM			FLOW IS NIL	No	STEAM CONDENSATE
48	1	48-01-OPN-04	03A045	BFD01	15	STORAGE			FLOW IS NIL	No	FLOOR WASHINGS

REPORT # 76

TA	BLDG	OUTLET PIPING NO	EPA OUTFALL #	DRAIN #	ROOM #	ROOM DESCRIPTION	FLOW RATE		PERIODICITY	SEASONAL	SOURCE TYPES
48	1	48-01-OPN-04	03A045	EFD02	51	STORAGE			FLOW IS NIL	No	FLOOR WASHINGS
48	1	48-01-OPN-04	03A045	EFD03	56	STORAGE			FLOW IS NIL	No	FLOOR WASHINGS
48	1	48-01-OPN-04	03A045	EFD04	51	STORAGE			FLOW IS NIL	No	FLOOR WASHINGS
48	1	48-01-OPN-04	03A045	EFD05	46	MACHINE SHOP			FLOW IS NIL	No	FLOOR WASHINGS
48	1	48-01-OPN-04	03A045	EFD06	45	OFFICE			FLOW IS NIL	No	FLOOR WASHINGS
48	1	48-01-OPN-04	03A045	EFD07	21	EQUIPMENT ROOM			FLOW IS NIL	No	FLOOR WASHINGS
48	1	48-01-OPN-04	03A045	EFD08	21	EQUIPMENT ROOM			FLOW IS NIL	No	HOT WATER PRV
48	1	48-01-OPN-04	03A045	EFD09	21	EQUIPMENT ROOM			FLOW IS NIL	No	FLOOR WASHINGS
48	1	48-01-OPN-04	03A045	EFD10	42	BOILER ROOM			FLOW IS NIL	No	BOILER DRAIN
48	1	48-01-OPN-04	03A045	EFD11	42	BOILER ROOM			FLOW IS NIL	No	FLOOR WASHINGS
48	1	48-01-OPN-04	03A045	EFD12	42	BOILER ROOM			FLOW IS NIL	No	FLOOR WASHINGS
48	1	48-01-OPN-04	03A045	EFD13	42	BOILER ROOM			FLOW IS NIL	No	FLOOR WASHINGS
48	1	48-01-OPN-04	03A045	EFD15	21	EQUIPMENT ROOM			FLOW IS NIL	No	HOT WATER PRV
48	1	48-01-OPN-04	03A045	EFD15	21	EQUIPMENT ROOM			FLOW IS NIL	No	STEAM PRV
48	1	48-01-OPN-04	03A045	EFD39	50	MACHINE SHOP			FLOW IS NIL	No	FIRE SYSTEM DRAIN
48	1	48-01-OPN-04	03A045	EFS01	21	EQUIPMENT ROOM			5 DAYS PER WEEK	No	COOLING TOWER BLOWDOWN
48	1	48-01-OPN-04	03A045	BSD03	11	PHOTO LAB			5 DAYS PER WEEK	No	PHOTO WASTE
48	1	48-01-OPN-04	03A045	RD07	N/A	ROOF			MOSTLY SUMMER	Yes	STORM WATER
48	1	48-01-OPN-04	03A045	RD08	N/A	ROOF			MOSTLY SUMMER	Yes	STORM WATER
48	1	48-01-OPN-04	03A045	RD09	N/A	ROOF			MOSTLY SUMMER	Yes	STORM WATER
48	1	48-01-OPN-04	03A045	RD10	N/A	ROOF			MOSTLY SUMMER	Yes	STORM WATER
48	1	48-01-OPN-04	03A045	RD11	N/A	ROOF			MOSTLY SUMMER	Yes	STORM WATER
48	1	48-01-OPN-04	03A045	RD12	N/A	ROOF			MOSTLY SUMMER	Yes	STORM WATER
48	1	48-01-OPN-04	03A045	RD13	N/A	ROOF			MOSTLY SUMMER	Yes	STORM WATER
48	1	48-01-OPN-04	03A045	RD14	N/A	ROOF			MOSTLY SUMMER	Yes	STORM WATER
48	1	48-01-OPN-04	03A045	RD15	N/A	ROOF			MOSTLY SUMMER	Yes	STORM WATER
48	1	48-01-OPN-04	03A045	RD16	N/A	ROOF			MOSTLY SUMMER	Yes	STORM WATER
48	1	48-01-OPN-04	03A045	RD17	N/A	ROOF			MOSTLY SUMMER	Yes	STORM WATER
48	1	48-01-OPN-04	03A045	RD18	N/A	ROOF			MOSTLY SUMMER	Yes	STORM WATER
48	1	48-01-OPN-04	03A045	RD19	N/A	ROOF			MOSTLY SUMMER	Yes	STORM WATER
48	1	48-01-OPN-04	03A045	RD20	N/A	ROOF			MOSTLY SUMMER	Yes	STORM WATER
48	1	48-01-OPN-04	03A045	RD21	N/A	ROOF			MOSTLY SUMMER	Yes	STORM WATER
48	1	48-01-OPN-04	03A045	RD22	N/A	ROOF			MOSTLY SUMMER	Yes	STORM WATER

REPORT # 76

TA	BLDG	OUTLET PIPING NO	EPA OUTFALL #	DRAIN #	ROOM #	ROOM DESCRIPTION	FLOW RATE		PERIODICITY	SEASONAL	SOURCE TYPES
48	1	48-01-OPN-04	03A045	RD23	N/A	ROOF			MOSTLY SUMMER	Yes	STORM WATER
48	1	48-01-OPN-04	03A045	RD24	N/A	ROOF			MOSTLY SUMMER	Yes	STORM WATER
48	1	48-01-OPN-04	03A045	RD25	N/A	ROOF			MOSTLY SUMMER	Yes	STORM WATER
48	1	48-01-OPN-04	03A045	RD26	N/A	ROOF			MOSTLY SUMMER	Yes	STORM WATER
48	1	48-01-OPN-04	03A045	RD27	N/A	ROOF			MOSTLY SUMMER	Yes	STORM WATER
48	1	48-01-OPN-04	03A045	RD28	N/A	ROOF			MOSTLY SUMMER	Yes	STORM WATER
48	1	48-01-OPN-04	03A045	RD29	N/A	ROOF			MOSTLY SUMMER	Yes	STORM WATER
48	1	48-01-OPN-04	03A045	RD30	N/A	ROOF			MOSTLY SUMMER	Yes	STORM WATER
48	1	48-01-OPN-04	03A045	RD31	N/A	ROOF			MOSTLY SUMMER	Yes	STORM WATER
48	1	48-01-OPN-04	03A045	RD32	N/A	ROOF			MOSTLY SUMMER	Yes	STORM WATER
48	1	48-01-OPN-05	DAYLIGHT	N/A	N/A	AIR COMPRESSOR			FLOW IS NIL	No	AIR COMPRESSOR DRAIN
48	1	48-01-OPN-06	13S/SWSC	1FD17	429A	RESTROOM			FLOW IS NIL	No	FLOOR WASHINGS
48	1	48-01-OPN-06	13S/SWSC	1FD18	428A	RESTROOM			FLOW IS NIL	No	FLOOR WASHINGS
48	1	48-01-OPN-06	13S/SWSC	1LV10	429A	RESTROOM			5 DAYS PER WEEK	No	LAVATORY
48	1	48-01-OPN-06	13S/SWSC	1LV11	429A	RESTROOM			5 DAYS PER WEEK	No	LAVATORY
48	1	48-01-OPN-06	13S/SWSC	1LV12	428A	RESTROOM			5 DAYS PER WEEK	No	LAVATORY
48	1	48-01-OPN-06	13S/SWSC	1SD19	418	LABORATORY			5 DAYS PER WEEK	No	LABORATORY SINK
48	1	48-01-OPN-06	13S/SWSC	1SH06	429A	RESTROOM			5 DAYS PER WEEK	No	SHOWER
48	1	48-01-OPN-06	13S/SWSC	1SH07	428A	RESTROOM			5 DAYS PER WEEK	No	SHOWER
48	1	48-01-OPN-06	13S/SWSC	1TL10	429A	RESTROOM			5 DAYS PER WEEK	No	TOILET
48	1	48-01-OPN-06	13S/SWSC	1TL11	428A	RESTROOM			5 DAYS PER WEEK	No	TOILET
48	1	48-01-OPN-06	13S/SWSC	1UR02	429A	RESTROOM			5 DAYS PER WEEK	No	URINAL
48	1	48-01-OPN-06	13S/SWSC	EFD16	76	RESTROOM			FLOW IS NIL	No	FLOOR WASHINGS
48	1	48-01-OPN-06	13S/SWSC	ELV02	76	RESTROOM			5 DAYS PER WEEK	No	LAVATORY
48	1	48-01-OPN-06	13S/SWSC	ESD04	76	RESTROOM			5 DAYS PER WEEK	No	MOP WATER
48	1	48-01-OPN-06	13S/SWSC	ETL02	76	RESTROOM			5 DAYS PER WEEK	No	TOILET
48	1	48-01-OPN-07	04A153	2ED1	504	PENTHOUSE			FLOW IS NIL	No	HEATING COIL DRAIN
48	1	48-01-OPN-07	04A153	2ED1	504	PENTHOUSE			FLOW IS NIL	No	AIR HANDLER CONDENSATE
48	1	48-01-OPN-07	04A153	2FD1	504	PENTHOUSE			FLOW IS NIL	No	AIR HANDLER CONDENSATE
48	1	48-01-OPN-07	04A153	EED12	71	BOILER ROOM			5 DAYS PER WEEK	No	UNKNOWN
48	1	48-01-OPN-07	04A153	EED13	71	BOILER ROOM			FLOW IS NIL	No	BOILER DRAIN
48	1	48-01-OPN-07	04A153	EED14	71	BOILER ROOM			FLOW IS NIL	No	BOILER DRAIN
48	1	48-01-OPN-07	04A153	EED15	70	MECHANICAL ROOM			FLOW IS NIL	No	HOT WATER SUPPLY PUMP

REPORT # 76

TA	BLDG	OUTLET PIPING NO	EPA OUTFALL #	DRAIN #	ROOM #	ROOM DESCRIPTION	FLOW RATE		PERIODICITY	SEASONAL	SOURCE TYPES
48	1	48-01-OPN-07	04A153	EED16	70	MECHANICAL ROOM			FLOW IS NIL	No	HOT WATER SUPPLY PUMP
48	1	48-01-OPN-07	04A153	EED17	70	MECHANICAL ROOM			FLOW IS NIL	No	CHILLED WATER
48	1	48-01-OPN-07	04A153	EED18	70	MECHANICAL ROOM			FLOW IS NIL	No	CHILLED WATER
48	1	48-01-OPN-07	04A153	EED19	70	MECHANICAL ROOM			FLOW IS NIL	No	CHILLED WATER
48	1	48-01-OPN-07	04A153	EFD17	71	BOILER ROOM			FLOW IS NIL	No	FLOOR WASHINGS
48	1	48-01-OPN-07	04A153	EFD18	70	MECHANICAL ROOM			FLOW IS NIL	No	BOILER FEED TANK DRAIN
48	1	48-01-OPN-07	04A153	EFD19	70	MECHANICAL ROOM			FLOW IS NIL	No	VACUUM PUMP EXHAUST FILTER DRAIN
48	1	48-01-OPN-07	04A153	ED1	N/A	ROOF			FLOW IS NIL	No	NONE
48	1	48-01-OPN-07	04A153	RD33	N/A	ROOF			MOSTLY SUMMER	Yes	STORM WATER
48	1	48-01-OPN-07	04A153	RD34	N/A	ROOF			MOSTLY SUMMER	Yes	STORM WATER
48	1	48-01-OPN-07	04A153	RD35	N/A	ROOF			MOSTLY SUMMER	Yes	STORM WATER
48	1	48-01-OPN-07	04A153	RD36	N/A	ROOF			MOSTLY SUMMER	Yes	STORM WATER
48	1	48-01-OPN-07	04A153	RD37	N/A	ROOF			MOSTLY SUMMER	Yes	STORM WATER
48	1	48-01-OPN-08	RLW	1FD19	426	LABORATORY			FLOW IS NIL	No	FLOOR WASHINGS
48	1	48-01-OPN-08	RLW	1FD20	430	LABORATORY			FLOW IS NIL	No	FLOOR WASHINGS
48	1	48-01-OPN-08	RLW	1FD21	419	LABORATORY			FLOW IS NIL	No	FLOOR WASHINGS
48	1	48-01-OPN-08	RLW	1FD22	423	LABORATORY			FLOW IS NIL	No	FLOOR WASHINGS
48	1	48-01-OPN-08	RLW	1FD23	430	LABORATORY			FLOW IS NIL	No	FLOOR WASHINGS
48	1	48-01-OPN-08	RLW	1FD24	430	LABORATORY			FLOW IS NIL	No	FLOOR WASHINGS
48	1	48-01-OPN-08	RLW	1FD25	425A	LABORATORY			FLOW IS NIL	No	FLOOR WASHINGS
48	1	48-01-OPN-08	RLW	1SD20	426	LABORATORY			5 DAYS PER WEEK	No	LAB SINK
48	1	48-01-OPN-08	RLW	1SD21	430	LABORATORY			5 DAYS PER WEEK	No	LAB SINK
48	1	48-01-OPN-08	RLW	1SD22	419	LABORATORY			5 DAYS PER WEEK	No	LAB SINK
48	1	48-01-OPN-08	RLW	1SD23	419	LABORATORY			5 DAYS PER WEEK	No	LAB SINK
48	1	48-01-OPN-08	RLW	1SD24	423	LABORATORY			5 DAYS PER WEEK	No	LAB SINK
48	1	48-01-OPN-08	RLW	1SD25	423	LABORATORY			5 DAYS PER WEEK	No	LAB SINK
48	1	48-01-OPN-08	RLW	1SD26	430	LABORATORY			5 DAYS PER WEEK	No	LAB SINK
48	1	48-01-OPN-08	RLW	1SD27	431	LABORATORY			5 DAYS PER WEEK	No	LAB SINK
48	1	48-01-OPN-08	RLW	EED20	68	MECHANICAL ROOM			FLOW IS NIL	No	BACK FLOW PREVENTER
48	1	48-01-OPN-08	RLW	EED21	70	MECHANICAL ROOM			FLOW IS NIL	No	DUCT WASH DOWN
48	1	48-01-OPN-08	RLW	EED22	N/A	EXHAUST STACK			FLOW IS NIL	No	STACK DRAIN
48	1	48-01-OPN-08	RLW	EFD20	70	MECHANICAL ROOM			FLOW IS NIL	No	FLOOR WASHINGS
48	1	48-01-OPN-08	RLW	EFD21	70	MECHANICAL ROOM			FLOW IS NIL	No	FLOOR WASHINGS

REPORT # 76

TA	BLDG	OUTLET PIPING NO	EPA OUTFALL #	DRAIN #	ROOM #	ROOM DESCRIPTION	FLOW RATE		PERIODICITY	SEASONAL	SOURCE TYPES
48	1	48-01-OPN-08	RLW	EFD22	70	MECHANICAL ROOM			FLOW IS NIL	No	FLOOR WASHINGS
48	1	48-01-OPN-08	RLW	EFD23	70	MECHANICAL ROOM			FLOW IS NIL	No	FLOOR WASHINGS
48	1	48-01-OPN-09	RLW	EFD24	60	HOT STORAGE			FLOW IS NIL	No	FLOOR WASHINGS
48	1	48-01-OPN-08	RLW	BSD05	70	MECHANICAL ROOM			NO FLOW	No	NONE (REMOVED)
48	1	48-01-OPN-08	RLW	BSP2	80	RLW SUMP RM			5 DAYS PER WEEK	No	RLW
48	1	48-01-OPN-08	RLW	BSP3	80	RLW SUMP RM			5 DAYS PER WEEK	No	RLW
48	1	48-01-OPN-09	ATMOSPHERE	N/A	N/A	RLW SUMP			NO FLOW	No	SUMP VENT
48	1	48-01-OPN-10	RLW	1SD28	322	LABORATORY			NO FLOW	No	LAB SINK
48	1	48-01-OPN-10	RLW	N/A	N/A	RLW SUMP			NO FLOW	No	RLW TANK
48	1	48-01-OPN-11	ATMOSPHERE	N/A	N/A	BOILER VENT			NO FLOW	No	BOILER VENT
48	1	48-01-OPN-12	DAYLIGHT	N/A	N/A	FILTER DRAIN			FLOW IS NIL	No	FILTER PLENUM DRAIN
48	1	48-01-OPN-13	DAYLIGHT	N/A	N/A	BOILER PRV			FLOW IS NIL	No	BOILER PRV
48	1	48-01-OPN-14	ATMOSPHERE	N/A	N/A	CONDENSATE TANK			NO FLOW	No	TANK VENT
48	1	48-01-OPN-15	ATMOSPHERE	N/A	N/A	CONDENSATE TANK			NO FLOW	No	TANK VENT
48	1	48-01-OPN-16	ATMOSPHERE	N/A	N/A	CONDENSATE TANK			NO FLOW	No	TANK VENT
48	1	48-01-OPN-17	DAYLIGHT	N/A	N/A	STUB OUT			NO FLOW	No	NONE
48	1	48-01-OPN-18	DAYLIGHT	N/A	N/A	FIRE SYSTEM DRAIN			FLOW IS NIL	No	FIRE SYSTEM DRAIN
48	1	48-01-OPN-19	DAYLIGHT	N/A	N/A	FIRE SYSTEM DRAIN			FLOW IS NIL	No	FIRE SYSTEM DRAIN
48	1	48-01-OPN-20	DAYLIGHT	N/A	N/A	FIRE SYSTEM DRAIN			FLOW IS NIL	No	FIRE SYSTEM DRAIN
48	1	48-01-OPN-21	04A131	1FD26	344	LABORATORY			FLOW IS NIL	No	FLOOR WASHINGS
48	1	48-01-OPN-21	04A131	1FD27	344	LABORATORY			FLOW IS NIL	No	FLOOR WASHINGS
48	1	48-01-OPN-21	04A131	1FD28	322	LABORATORY			FLOW IS NIL	No	FLOOR WASHINGS
48	1	48-01-OPN-21	04A131	1FD29	322	LABORATORY			FLOW IS NIL	No	FLOOR WASHINGS
48	1	48-01-OPN-21	04A131	1FD32	324	LABORATORY			FLOW IS NIL	No	FLOOR WASHINGS
48	1	48-01-OPN-21	04A131	EFD25	244	BOILER ROOM			NO FLOW	No	NONE (PLUGGED)
48	1	48-01-OPN-21	04A131	EFD26	244	BOILER ROOM			FLOW IS NIL	No	BACK FLOW PREVENTERS
48	1	48-01-OPN-21	04A131	EFD26	244	BOILER ROOM			FLOW IS NIL	No	VACUUM TANK DRAIN
48	1	48-01-OPN-21	04A131	EFD26	244	BOILER ROOM			FLOW IS NIL	No	VACUUM PUMP CONDENSATE
48	1	48-01-OPN-21	04A131	EFD27	244	BOILER ROOM			FLOW IS NIL	No	STEAM CONDENSATE
48	1	48-01-OPN-21	04A131	EFD27	244	BOILER ROOM			FLOW IS NIL	No	BOILER DRAIN
48	1	48-01-OPN-21	04A131	EFD27	244	BOILER ROOM			FLOW IS NIL	No	FIRE DRAIN
48	1	48-01-OPN-21	04A131	EFD28	244	BOILER ROOM			FLOW IS NIL	No	WATER HEATER PRV
48	1	48-01-OPN-21	04A131	ETD01	244	BOILER ROOM			FLOW IS NIL	No	FLOOR WASHINGS

REPORT # 76

TA	BLDG	OUTLET PIPING NO	EPA OUTFALL #	DRAIN #	ROOM #	ROOM DESCRIPTION	FLOW RATE		PERIODICITY	SEASONAL	SOURCE TYPES
48	1	48-01-OPN-21	04A131	RD01	N/A	ROOF			MOSTLY SUMMER	Yes	STORM WATER
48	1	48-01-OPN-21	04A131	RD02	N/A	ROOF			MOSTLY SUMMER	Yes	STORM WATER
48	1	48-01-OPN-21	04A131	RD03	N/A	ROOF			MOSTLY SUMMER	Yes	STORM WATER
48	1	48-01-OPN-21	04A131	RD04	N/A	ROOF			MOSTLY SUMMER	Yes	STORM WATER
48	1	48-01-OPN-21	04A131	RD05	N/A	ROOF			MOSTLY SUMMER	Yes	STORM WATER
48	1	48-01-OPN-21	04A131	RD06	N/A	ROOF			MOSTLY SUMMER	Yes	STORM WATER
48	1	48-01-OPN-22	DAYLIGHT	N/A	N/A	A/C CONDENSATE			FLOW IS NIL	No	A/C CONDENSATE
48	1	48-01-OPN-23	DAYLIGHT	N/A	N/A	VALVED STUB			FLOW IS NIL	No	FILTER
48	1	48-01-OPN-24	DAYLIGHT	N/A	N/A	STACK DRAIN			FLOW IS NIL	No	STACK DRAIN
48	1	48-01-OPN-25	DAYLIGHT	N/A	N/A	VALVED STUB			FLOW IS NIL	No	FILTER
48	1	48-01-OPN-26	DAYLIGHT	N/A	N/A	STUB			NO FLOW	No	NONE
48	1	48-01-OPN-27	ATMOSPHERE	N/A	N/A	GAS VENT			NO FLOW	No	ARGON TANK
48	1	48-01-OPN-28	DAYLIGHT	N/A	N/A	FIRE SYSTEM DRAIN			FLOW IS NIL	No	FIRE SYSTEM DRAIN
48	1	48-01-OPN-29	DAYLIGHT	N/A	N/A	VACUUM PUMP			FLOW IS NIL	No	PUMP DRAIN
48	1	48-01-OPN-30	DAYLIGHT	N/A	N/A	A/C UNIT			FLOW IS NIL	No	CONDENSATE DRAIN
48	1	48-01-OPN-31	ATMOSPHERE	N/A	N/A	NITROGEN TANK			NO FLOW	No	GAS PRV
48	1	48-01-OPN-32	13S/SWSC	1LV13	604	RESTROOM			5 DAYS PER WEEK	No	LAVATORY
48	1	48-01-OPN-32	13S/SWSC	1LV14	602	RESTROOM			5 DAYS PER WEEK	No	LAVATORY
48	1	48-01-OPN-32	13S/SWSC	1TL12	604	RESTROOM			5 DAYS PER WEEK	No	TOILET
48	1	48-01-OPN-32	13S/SWSC	1TL13	602	RESTROOM			5 DAYS PER WEEK	No	TOILET
48	1	48-01-OPN-33	DAYLIGHT	N/A	N/A	STUB OUT			NO FLOW	No	NONE
48	1	48-01-OPN-34	ATMOSPHERE	N/A	N/A	GAS CONNECTION			NO FLOW	No	BOTTLED GAS
48	1	48-01-OPN-35	ATMOSPHERE	N/A	N/A	GAS CONNECTION			NO FLOW	No	BOTTLED GAS
48	1	48-01-OPN-36	ATMOSPHERE	N/A	N/A	GAS CONNECTION			NO FLOW	No	BOTTLED GAS
48	1	48-01-OPN-37	DAYLIGHT	N/A	N/A	UNKNOWN PIPE			NO FLOW	No	UNKNOWN
48	1	48-01-OPN-38	DAYLIGHT	N/A	N/A	UNKNOWN PIPE			NO FLOW	No	UNKNOWN
48	1	48-01-OPN-39	DAYLIGHT	N/A	N/A	STORM CANALE			MOSTLY SUMMER	Yes	STORM WATER
48	1	48-01-OPN-40	DAYLIGHT	N/A	N/A	STORM CANALE			MOSTLY SUMMER	Yes	STORM WATER
48	1	48-01-OPN-41	DAYLIGHT	N/A	N/A	STORM CANALE			MOSTLY SUMMER	Yes	STORM WATER
48	1	48-01-OPN-42	DAYLIGHT	N/A	N/A	TANK FILL LINE			NO FLOW	No	HYDROGEN GAS TANK
48	1	48-01-OPN-43	ATMOSPHERE	N/A	N/A	STEAM VENT			FLOW IS NIL	No	STEAM VENT
48	1	48-01-OPN-44	ATMOSPHERE	N/A	N/A	STEAM VENT			FLOW IS NIL	No	STEAM VENT
48	1	48-01-OPN-45	ATMOSPHERE	N/A	N/A	STEAM VENT			FLOW IS NIL	No	STEAM VENT

REPORT # 76

TA	BLDG	OUTLET PIPING NO	EPA OUTFALL #	DRAIN #	ROOM #	ROOM DESCRIPTION	FLOW RATE		PERIODICITY	SEASONAL	SOURCE TYPES
48	1	48-01-OPN-46	ATMOSPHERE	N/A	N/A	STEAM VENT			FLOW IS NIL	No	STEAM VENT
48	1	48-01-OPN-47	ATMOSPHERE	N/A	N/A	STEAM VENT			FLOW IS NIL	No	STEAM VENT
48	1	48-01-OPN-48	DAYLIGHT	N/A	N/A	FIRE SYSTEM			FLOW IS NIL	No	FIRE SYSTEM DRAIN
48	1	48-01-OPN-49	ATMOSPHERE	N/A	N/A	GAS VENT			NO FLOW	No	GAS VENT
48	1	48-01-OPN-50	ATMOSPHERE	N/A	N/A	GAS VENT			NO FLOW	No	GAS VENT
48	1	48-01-OPN-51	ATMOSPHERE	N/A	N/A	GAS VENT			NO FLOW	No	GAS VENT
48	1	48-01-OPN-52	ATMOSPHERE	N/A	N/A	GAS VENT			NO FLOW	No	GAS VENT
48	1	48-01-OPN-53	ATMOSPHERE	N/A	N/A	GAS VENT			NO FLOW	No	GAS VENT
48	1	48-01-OPN-54	RLW	TCD02	313	LABORATORY			5 DAYS PER WEEK	No	LAB CUP SINK DRAIN
48	1	48-01-OPN-54	RLW	TCD03	315	LABORATORY			5 DAYS PER WEEK	No	LAB CUP SINK DRAIN
48	1	48-01-OPN-54	RLW	TCD04	315	LABORATORY			5 DAYS PER WEEK	No	LAB CUP SINK DRAIN
48	1	48-01-OPN-54	RLW	TCD05	314	LABORATORY			5 DAYS PER WEEK	No	LAB CUP SINK DRAIN
48	1	48-01-OPN-54	RLW	TCD06	314	LABORATORY			5 DAYS PER WEEK	No	LAB CUP SINK DRAIN
48	1	48-01-OPN-54	RLW	TCD07	312	LABORATORY			5 DAYS PER WEEK	No	LAB CUP SINK DRAIN
48	1	48-01-OPN-54	RLW	TCD08	311	LABORATORY			5 DAYS PER WEEK	No	LAB CUP SINK DRAIN
48	1	48-01-OPN-54	RLW	TCD09	311A	LABORATORY			5 DAYS PER WEEK	No	LAB CUP SINK DRAIN
48	1	48-01-OPN-54	RLW	TCD10	313	LABORATORY			5 DAYS PER WEEK	No	LAB CUP SINK DRAIN
48	1	48-01-OPN-54	RLW	TCD11	312B	LABORATORY			5 DAYS PER WEEK	No	LAB CUP SINK DRAIN
48	1	48-01-OPN-54	RLW	TCD12	310C	LABORATORY			5 DAYS PER WEEK	No	LAB CUP SINK DRAIN
48	1	48-01-OPN-54	RLW	TCD13	308B	LABORATORY			5 DAYS PER WEEK	No	LAB CUP SINK DRAIN
48	1	48-01-OPN-54	RLW	TCD14	309	LABORATORY			5 DAYS PER WEEK	No	LAB CUP SINK DRAIN
48	1	48-01-OPN-54	RLW	TCD15	310	LABORATORY			5 DAYS PER WEEK	No	LAB CUP SINK DRAIN
48	1	48-01-OPN-54	RLW	TCD16	307	LABORATORY			5 DAYS PER WEEK	No	LAB CUP SINK DRAIN
48	1	48-01-OPN-54	RLW	TCD17	307B	LABORATORY			5 DAYS PER WEEK	No	LAB CUP SINK DRAIN
48	1	48-01-OPN-54	RLW	TCD18	606	LABORATORY			5 DAYS PER WEEK	No	LAB CUP SINK DRAIN
48	1	48-01-OPN-54	RLW	TCD19	306A	LABORATORY			5 DAYS PER WEEK	No	LAB CUP SINK DRAIN
48	1	48-01-OPN-54	RLW	TCD20	306	LABORATORY			5 DAYS PER WEEK	No	LAB CUP SINK DRAIN
48	1	48-01-OPN-54	RLW	TCD21	306	LABORATORY			5 DAYS PER WEEK	No	LAB CUP SINK DRAIN
48	1	48-01-OPN-54	RLW	TCD22	306	LABORATORY			5 DAYS PER WEEK	No	LAB CUP SINK DRAIN
48	1	48-01-OPN-54	RLW	TCD23	305	LABORATORY			5 DAYS PER WEEK	No	LAB CUP SINK DRAIN
48	1	48-01-OPN-54	RLW	TCD24	303	LABORATORY			5 DAYS PER WEEK	No	LAB CUP SINK DRAIN
48	1	48-01-OPN-54	RLW	TCD25	305B	LABORATORY			5 DAYS PER WEEK	No	LAB CUP SINK DRAIN
48	1	48-01-OPN-54	RLW	TCD26	402B	LABORATORY			5 DAYS PER WEEK	No	LAB CUP SINK DRAIN

REPORT # 76

TA	BLDG	OUTLET PIPING NO	EPA OUTFALL #	DRAIN #	ROOM #	ROOM DESCRIPTION	FLOW RATE		PERIODICITY	SEASONAL	SOURCE TYPES
48	1	48-01-OPN-54	RLW	1CD27	402	LABORATORY			5 DAYS PER WEEK	No	LAB CUP SINK DRAIN
48	1	48-01-OPN-54	RLW	1CD28	408B	LABORATORY			5 DAYS PER WEEK	No	LAB CUP SINK DRAIN
48	1	48-01-OPN-54	RLW	1CD29	408	LABORATORY			5 DAYS PER WEEK	No	LAB CUP SINK DRAIN
48	1	48-01-OPN-54	RLW	1CD30	407	LABORATORY			5 DAYS PER WEEK	No	LAB CUP SINK DRAIN
48	1	48-01-OPN-54	RLW	1CD31	407B	LABORATORY			5 DAYS PER WEEK	No	LAB CUP SINK DRAIN
48	1	48-01-OPN-54	RLW	1CD32	409	LABORATORY			5 DAYS PER WEEK	No	LAB CUP SINK DRAIN
48	1	48-01-OPN-54	RLW	1CD33	409	LABORATORY			5 DAYS PER WEEK	No	LAB CUP SINK DRAIN
48	1	48-01-OPN-54	RLW	1CD34	410	LABORATORY			5 DAYS PER WEEK	No	LAB CUP SINK DRAIN
48	1	48-01-OPN-54	RLW	1CD35	412B	LABORATORY			5 DAYS PER WEEK	No	LAB CUP SINK DRAIN
48	1	48-01-OPN-54	RLW	1CD36	410	LABORATORY			5 DAYS PER WEEK	No	LAB CUP SINK DRAIN
48	1	48-01-OPN-54	RLW	1CD37	410	LABORATORY			5 DAYS PER WEEK	No	LAB CUP SINK DRAIN
48	1	48-01-OPN-54	RLW	1CD38	412	LABORATORY			5 DAYS PER WEEK	No	LAB CUP SINK DRAIN
48	1	48-01-OPN-54	RLW	1CD39	410	LABORATORY			5 DAYS PER WEEK	No	LAB CUP SINK DRAIN
48	1	48-01-OPN-54	RLW	1CD40	409	LABORATORY			5 DAYS PER WEEK	No	LAB CUP SINK DRAIN
48	1	48-01-OPN-54	RLW	1CD41	409	LABORATORY			5 DAYS PER WEEK	No	LAB CUP SINK DRAIN
48	1	48-01-OPN-54	RLW	1CD42	409	LABORATORY			5 DAYS PER WEEK	No	LAB CUP SINK DRAIN
48	1	48-01-OPN-54	RLW	1CD43	414B	LABORATORY			5 DAYS PER WEEK	No	LAB CUP SINK DRAIN
48	1	48-01-OPN-54	RLW	1CD44	414	LABORATORY			5 DAYS PER WEEK	No	LAB CUP SINK DRAIN
48	1	48-01-OPN-54	RLW	1CD45	413	LABORATORY			5 DAYS PER WEEK	No	LAB CUP SINK DRAIN
48	1	48-01-OPN-54	RLW	1CD46	415	LABORATORY			5 DAYS PER WEEK	No	LAB CUP SINK DRAIN
48	1	48-01-OPN-54	RLW	1CD47	413C	LABORATORY			5 DAYS PER WEEK	No	LAB CUP SINK DRAIN
48	1	48-01-OPN-54	RLW	1CD48	415	LABORATORY			5 DAYS PER WEEK	No	LAB CUP SINK DRAIN
48	1	48-01-OPN-54	RLW	1CD49	415	LABORATORY			5 DAYS PER WEEK	No	LAB CUP SINK DRAIN
48	1	48-01-OPN-54	RLW	1CD50	415	LABORATORY			5 DAYS PER WEEK	No	LAB CUP SINK DRAIN
48	1	48-01-OPN-54	RLW	1CD51	415	LABORATORY			5 DAYS PER WEEK	No	LAB CUP SINK DRAIN
48	1	48-01-OPN-54	RLW	1ED01	346	LABORATORY			NO FLOW	No	NONE
48	1	48-01-OPN-54	RLW	1ED02	346	LABORATORY			NO FLOW	No	NONE
48	1	48-01-OPN-54	RLW	1ED03	346	LABORATORY			NO FLOW	No	NONE
48	1	48-01-OPN-54	RLW	1ED04	346	LABORATORY			NO FLOW	No	NONE
48	1	48-01-OPN-54	RLW	1ED05	346	LABORATORY			NO FLOW	No	NONE
48	1	48-01-OPN-54	RLW	1ED06	346	LABORATORY			NO FLOW	No	NONE
48	1	48-01-OPN-54	RLW	1ED07	346	LABORATORY			NO FLOW	No	NONE
48	1	48-01-OPN-54	RLW	1SD08	346	LABORATORY			FLOW IS NIL	No	AIR HANDLER DRAIN

REPORT # 76

TA	BLDG	OUTLET PIPING NO	EPA OUTFALL #	DRAIN #	ROOM #	ROOM DESCRIPTION	FLOW RATE		PERIODICITY	SEASONAL	SOURCE TYPES
48	1	48-01-OPN-54	RLW	1ED09	346	LABORATORY			NO FLOW	No	NONE
48	1	48-01-OPN-54	RLW	1ED10	346	LABORATORY			NO FLOW	No	NONE
48	1	48-01-OPN-54	RLW	1ED11	346	LABORATORY			NO FLOW	No	NONE
48	1	48-01-OPN-54	RLW	1ED12	346	LABORATORY			NO FLOW	No	NONE
48	1	48-01-OPN-54	RLW	1ED13	346	LABORATORY			NO FLOW	No	NONE
48	1	48-01-OPN-54	RLW	1ED14	346	LABORATORY			NO FLOW	No	NONE
48	1	48-01-OPN-54	RLW	1ED15	346	LABORATORY			NO FLOW	No	NONE
48	1	48-01-OPN-54	RLW	1ED16	346	LABORATORY			FLOW IS NIL	No	AIR HANDLER DRAIN
48	1	48-01-OPN-54	RLW	1ED17	346	LABORATORY			NO FLOW	No	NONE
48	1	48-01-OPN-54	RLW	1ED18	346	LABORATORY			NO FLOW	No	NONE
48	1	48-01-OPN-54	RLW	1ED19	346	LABORATORY			NO FLOW	No	NONE
48	1	48-01-OPN-54	RLW	1ED20	346	LABORATORY			NO FLOW	No	NONE
48	1	48-01-OPN-54	RLW	1FD30	314	LABORATORY			FLOW IS NIL	No	FLOOR WASHINGS
48	1	48-01-OPN-54	RLW	1FD31	313	LABORATORY			FLOW IS NIL	No	FLOOR WASHINGS
48	1	48-01-OPN-54	RLW	1SD29	315	LABORATORY			5 DAYS PER WEEK	No	LAB SINK
48	1	48-01-OPN-54	RLW	1SD30	314	LABORATORY			5 DAYS PER WEEK	No	LAB SINK
48	1	48-01-OPN-54	RLW	1SD31	313	LABORATORY			5 DAYS PER WEEK	No	LAB SINK
48	1	48-01-OPN-54	RLW	1SD32	311A	LABORATORY			5 DAYS PER WEEK	No	LAB SINK
48	1	48-01-OPN-54	RLW	1SD33	311	LABORATORY			5 DAYS PER WEEK	No	LAB SINK
48	1	48-01-OPN-54	RLW	1SD34	312	LABORATORY			5 DAYS PER WEEK	No	LAB SINK
48	1	48-01-OPN-54	RLW	1SD35	312B	LABORATORY			5 DAYS PER WEEK	No	LAB SINK
48	1	48-01-OPN-54	RLW	1SD36	310C	LABORATORY			5 DAYS PER WEEK	No	LAB SINK
48	1	48-01-OPN-54	RLW	1SD37	308B	LABORATORY			5 DAYS PER WEEK	No	LAB SINK
48	1	48-01-OPN-54	RLW	1SD38	606	LABORATORY			5 DAYS PER WEEK	No	LAB SINK
48	1	48-01-OPN-54	RLW	1SD39	606	LABORATORY			5 DAYS PER WEEK	No	LAB SINK
48	1	48-01-OPN-54	RLW	1SD40	606	LABORATORY			5 DAYS PER WEEK	No	LAB SINK
48	1	48-01-OPN-54	RLW	1SD41	606	LABORATORY			5 DAYS PER WEEK	No	LAB SINK
48	1	48-01-OPN-54	RLW	1SD42	606	LABORATORY			5 DAYS PER WEEK	No	LAB SINK
48	1	48-01-OPN-54	RLW	1SD43	606B	LABORATORY			5 DAYS PER WEEK	No	LAB SINK
48	1	48-01-OPN-54	RLW	1SD44	600	LABORATORY			5 DAYS PER WEEK	No	LAB SINK
48	1	48-01-OPN-54	RLW	1SD45	307B	LABORATORY			5 DAYS PER WEEK	No	LAB SINK
48	1	48-01-OPN-54	RLW	1SD46	307	LABORATORY			5 DAYS PER WEEK	No	LAB SINK
48	1	48-01-OPN-54	RLW	1SD47	310	LABORATORY			5 DAYS PER WEEK	No	LAB SINK

REPORT # 76

TA	BLDG	OUTLET PIPING NO	EPA OUTFALL #	DRAIN #	ROOM #	ROOM DESCRIPTION	FLOW RATE		PERIODICITY	SEASONAL	SOURCE TYPES
48	1	48-01-OPN-54	RLW	1SD48	308	LABORATORY			5 DAYS PER WEEK	No	LAB SINK
48	1	48-01-OPN-54	RLW	1SD49	306A	LABORATORY			5 DAYS PER WEEK	No	LAB SINK
48	1	48-01-OPN-54	RLW	1SD50	306	LABORATORY			5 DAYS PER WEEK	No	LAB SINK
48	1	48-01-OPN-54	RLW	1SD51	306	LABORATORY			5 DAYS PER WEEK	No	LAB SINK
48	1	48-01-OPN-54	RLW	1SD52	302	LABORATORY			5 DAYS PER WEEK	No	LAB SINK
48	1	48-01-OPN-54	RLW	1SD53	305	LABORATORY			5 DAYS PER WEEK	No	LAB SINK
48	1	48-01-OPN-54	RLW	1SD54	303	LABORATORY			5 DAYS PER WEEK	No	LAB SINK
48	1	48-01-OPN-54	RLW	1SD55	305B	LABORATORY			5 DAYS PER WEEK	No	LAB SINK
48	1	48-01-OPN-54	RLW	1SD56	270	LABORATORY			5 DAYS PER WEEK	No	LAB SINK
48	1	48-01-OPN-54	RLW	1SD57	412B	LABORATORY			5 DAYS PER WEEK	No	LAB SINK
48	1	48-01-OPN-54	RLW	1SD58	412	LABORATORY			5 DAYS PER WEEK	No	LAB SINK
48	1	48-01-OPN-54	RLW	1SD59	409	LABORATORY			5 DAYS PER WEEK	No	LAB SINK
48	1	48-01-OPN-54	RLW	1SD60	413C	LABORATORY			5 DAYS PER WEEK	No	LAB SINK
48	1	48-01-OPN-54	RLW	1SD61	414B	LABORATORY			5 DAYS PER WEEK	No	LAB SINK
48	1	48-01-OPN-54	RLW	1SD62	416	LABORATORY			5 DAYS PER WEEK	No	LAB SINK
48	1	48-01-OPN-54	RLW	1SD63	414	LABORATORY			5 DAYS PER WEEK	No	LAB SINK
48	1	48-01-OPN-54	RLW	1SD64	413	LABORATORY			5 DAYS PER WEEK	No	LAB SINK
48	1	48-01-OPN-54	RLW	1SD65	416	LABORATORY			5 DAYS PER WEEK	No	LAB SINK
48	1	48-01-OPN-54	RLW	1SD66	408B	LABORATORY			5 DAYS PER WEEK	No	LAB SINK
48	1	48-01-OPN-54	RLW	1SD67	408	LABORATORY			5 DAYS PER WEEK	No	LAB SINK
48	1	48-01-OPN-54	RLW	1SD68	407	LABORATORY			5 DAYS PER WEEK	No	LAB SINK
48	1	48-01-OPN-54	RLW	1SD69	407B	LABORATORY			5 DAYS PER WEEK	No	LAB SINK
48	1	48-01-OPN-54	RLW	1SD70	410	LABORATORY			5 DAYS PER WEEK	No	LAB SINK
48	1	48-01-OPN-54	RLW	ECD03	55	LABORATORY			5 DAYS PER WEEK	No	LAB CUP SINK DRAIN
48	1	48-01-OPN-54	RLW	ECD04	55	LABORATORY			5 DAYS PER WEEK	No	LAB CUP SINK DRAIN
48	1	48-01-OPN-54	RLW	EED24	11A	LABORATORY			FLOW IS NIL	No	DUCT WASHDOWN
48	1	48-01-OPN-54	RLW	EED25	11A	MECHANICAL ROOM			FLOW IS NIL	No	DUCT WASHDOWN
48	1	48-01-OPN-54	RLW	EED26	11A	MECHANICAL ROOM			FLOW IS NIL	No	DUCT WASHDOWN
48	1	48-01-OPN-54	RLW	EED27	55	LABORATORY			NO FLOW	No	NONE
48	1	48-01-OPN-54	RLW	EED28	55	LABORATORY			NO FLOW	No	NONE
48	1	48-01-OPN-54	RLW	EFD29	4	LASER LABORATORY			FLOW IS NIL	No	FLOOR WASHINGS
48	1	48-01-OPN-54	RLW	EFD30	6	LABORATORY			5 DAYS PER WEEK	No	SLATE SAW
48	1	48-01-OPN-54	RLW	EFD31	4C	LABORATORY			FLOW IS NIL	No	FLOOR WASHINGS

REPORT # 76

TA	BLDG	OUTLET PIPING NO	EPA OUTFALL #	DRAIN #	ROOM #	ROOM DESCRIPTION	FLOW RATE		PERIODICITY	SEASONAL	SOURCE TYPES
48	1	48-01-OPN-54	RLW	BFD32	11A	LABORATORY			FLOW IS NIL	No	FLOOR WASHINGS
48	1	48-01-OPN-54	RLW	BFD33	11	MECHANICAL ROOM			FLOW IS NIL	No	FLOOR WASHINGS
48	1	48-01-OPN-54	RLW	BFD34	11	MECHANICAL ROOM			FLOW IS NIL	No	FLOOR WASHINGS
48	1	48-01-OPN-54	RLW	BFD35	11	MECHANICAL ROOM			FLOW IS NIL	No	FLOOR WASHINGS
48	1	48-01-OPN-54	RLW	BFD36	50	MACHINE SHOP			FLOW IS NIL	No	FLOOR WASHINGS
48	1	48-01-OPN-54	RLW	BFD37	48	LABORATORY			FLOW IS NIL	No	FLOOR WASHINGS
48	1	48-01-OPN-54	RLW	BFD38	68	MECHANICAL ROOM			FLOW IS NIL	No	FLOOR WASHINGS
48	1	48-01-OPN-54	RLW	BSD06	4B	LABORATORY			5 DAYS PER WEEK	No	LAB SINK
48	1	48-01-OPN-54	RLW	BSD07	6	LABORATORY			5 DAYS PER WEEK	No	LAB SINK
48	1	48-01-OPN-54	RLW	BSD08	18A	LABORATORY			5 DAYS PER WEEK	No	LAB SINK
48	1	48-01-OPN-54	RLW	BSD09	19A	LABORATORY			5 DAYS PER WEEK	No	LAB SINK
48	1	48-01-OPN-54	RLW	BSP04	4B	LABORATORY			5 DAYS PER WEEK	No	RLW FACILITIES
48	1	48-01-OPN-55	ATMOSPHERE	N/A	N/A	PLUMBING VENT			NO FLOW	No	PLUMBING VENT
48	1	48-01-OPN-55	DAYLIGHT	N/A	N/A	UNKNOWN			FLOW IS NIL	No	UNKNOWN
48	1	48-01-OPN-57	ATMOSPHERE	N/A	N/A	GAS VENT			NO FLOW	No	GAS VENT
48	1	48-01-OPN-58	ATMOSPHERE	N/A	N/A	GAS VENT			NO FLOW	No	GAS VENT
48	1	48-01-OPN-59	ATMOSPHERE	N/A	N/A	GAS VENT			NO FLOW	No	GAS VENT
48	1	48-01-OPN-60	ATMOSPHERE	N/A	N/A	GAS VENT			NO FLOW	No	GAS VENT
48	1	48-01-OPN-61	DAYLIGHT	RD38	N/A	ROOF			MOSTLY SUMMER	Yes	STORM WATER
48	1	48-01-OPN-62	DAYLIGHT	N/A	N/A	PIPE STUB			NO FLOW	No	NONE
48	1	48-01-OPN-63	DAYLIGHT	N/A	N/A	PIPE STUB			NO FLOW	No	NONE
48	1	48-01-OPN-64	DAYLIGHT	N/A	N/A	FIRE SYSTEM			FLOW IS NIL	No	FIRE SYSTEM DRAIN
48	1	48-01-OPN-65	DAYLIGHT	N/A	N/A	FIRE SYSTEM			FLOW IS NIL	No	FIRE SYSTEM DRAIN
48	1	48-01-OPN-66	ATMOSPHERE	N/A	N/A	RLW SUMP			NO FLOW	No	SUMP VENT
48	1	48-01-OPN-67	ATMOSPHERE	N/A	N/A	GAS TANK			NO FLOW	No	NONE (FILL LINE)
48	1	48-01-OPN-68	DAYLIGHT	N/A	N/A	FIRE SYSTEM			FLOW IS NIL	No	FIRE SYSTEM DRAIN
48	1	48-01-OPN-69	DAYLIGHT	N/A	N/A	PIPE STUB			NO FLOW	No	NONE
48	1	48-01-OPN-70	DAYLIGHT	N/A	N/A	PIPE STUB			NO FLOW	No	NONE
48	1	48-01-OPN-71	DAYLIGHT	N/A	N/A	FIRE SYSTEM			FLOW IS NIL	No	FIRE SYSTEM DRAIN
48	1	48-01-OPN-72	DAYLIGHT	N/A	N/A	FIRE SYSTEM			FLOW IS NIL	No	FIRE SYSTEM DRAIN
48	1	48-01-OPN-73	ATMOSPHERE	N/A	N/A	RLW SUMP			NO FLOW	No	SUMP VENT
48	1	48-01-OPN-74	ATMOSPHERE	N/A	N/A	GAS VENT			NO FLOW	No	GAS VENT
48	1	48-01-OPN-75	DAYLIGHT	N/A	N/A	FIRE SYSTEM			FLOW IS NIL	No	FIRE SYSTEM DRAIN

REPORT # 76

TA	BLDG	OUTLET PIPING NO	EPA OUTFALL #	DRAIN #	ROOM #	ROOM DESCRIPTION	FLOW RATE		PERIODICITY	SEASONAL	SOURCE TYPES
48	1	48-01-OPN-76	DAYLIGHT	N/A	N/A	ROOF GUTTER			MOSTLY SUMMER	Yes	STORM WATER
48	1	48-01-OPN-77	DAYLIGHT	N/A	N/A	ROOF CANALE			MOSTLY SUMMER	Yes	STORM WATER
48	1	48-01-OPN-78	DAYLIGHT	N/A	N/A	FIRE SYSTEM			FLOW IS NIL	No	FIRE SYSTEM DRAIN
48	1	48-01-OPN-79	DAYLIGHT	N/A	N/A	ROOF GUTTER			MOSTLY SUMMER	Yes	STORM WATER
48	1	48-01-OPN-80	DAYLIGHT	N/A	N/A	ROOF GUTTER			MOSTLY SUMMER	Yes	STORM WATER
48	1	48-01-OPN-81	DAYLIGHT	N/A	N/A	ROOF GUTTER			MOSTLY SUMMER	Yes	STORM WATER
48	1	48-01-OPN-82	DAYLIGHT	N/A	N/A	ROOF CANALE			MOSTLY SUMMER	Yes	STORM WATER
48	1	48-01-OPN-83	DAYLIGHT	N/A	N/A	ROOF GUTTER			MOSTLY SUMMER	Yes	STORM WATER
48	1	48-01-OPN-84	DAYLIGHT	N/A	N/A	FIRE SYSTEM			FLOW IS NIL	No	FIRE SYSTEM DRAIN
48	1	48-01-OPN-85	DAYLIGHT	N/A	N/A	FIRE SYSTEM			FLOW IS NIL	No	FIRE SYSTEM DRAIN
48	1	48-01-OPN-86	DAYLIGHT	N/A	N/A	ROOF GUTTER			MOSTLY SUMMER	Yes	STORM WATER
48	1	48-01-OPN-87	DAYLIGHT	N/A	N/A	PIPE STUB			NO FLOW	No	NONE
48	1	48-01-OPN-88	ATMOSPHERE	N/A	N/A	GAS CONNECTION			NO FLOW	No	GAS CONNECTION
48	1	48-01-OPN-89	DAYLIGHT	N/A	N/A	AIR CONDINTIONING UNIT			FLOW IS NIL	No	A/C CONDENSATE
48	1	48-01-OPN-90	DAYLIGHT	N/A	N/A	AIR CONDINTIONING UNIT			FLOW IS NIL	No	A/C CONDENSATE
48	1	48-01-OPN-91	DAYLIGHT	N/A	N/A	PIPE STUB			NO FLOW	No	NONE (CAPPED)
48	2	48-02-OPN-01	13S/SWSC	1FD01	N/A	GUARD STATION			5 DAYS PER WEEK	No	FLOOR WASHING
48	2	48-02-OPN-01	13S/SWSC	1LV01	N/A	GUARD STATION			5 DAYS PER WEEK	No	LAVATORY
48	2	48-02-OPN-01	13S/SWSC	1TL01	N/A	GUARD STATION			5 DAYS PER WEEK	No	TOILET
48	2	48-02-OPN-01	13S/SWSC	1WF01	N/A	GUARD STATION			5 DAYS PER WEEK	No	WATER FOUNTAIN
48	2	48-02-OPN-02	DAYLIGHT	N/A	N/A	GUARD STATION			5 DAYS PER WEEK	No	WATER HEATER PRV
48	8	48-08-OPN-01	DAYLIGHT	1WF01	N/A	LASER LAB			5 DAYS PER WEEK	No	WATER FOUNTAIN
48	8	48-08-OPN-02	DAYLIGHT	1SD01	N/A	LASER LAB			5 DAYS PER WEEK	No	HAND WASHING
48	8	48-08-OPN-03	DAYLIGHT	N/A	N/A	LASER LAB			FLOW IS NIL	No	WATER HEATER PRV
48	8	48-08-OPN-04	04A12E	N/A	N/A	LASER LAB			7 DAYS PER WEEK	No	NON-CONTACT COOLING WATER
48	8	48-08-OPN-05	N/A	N/A	N/A	WATER SERVICE			7 DAYS PER WEEK	No	POTABLE WATER
48	8	48-08-OPN-06	N/A	N/A	N/A	ABANDONED PIPE STUB			NONE	No	NONE (PIPE STUB)
48	8	48-08-OPN-07	DAYLIGHT	N/A	N/A	A/C CONDENSATE			FLOW IS NIL	No	AIR CONDITIONER
48	8	48-08-OPN-08	DAYLIGHT	N/A	N/A	A/C CONDENSATE			FLOW IS NIL	No	AIR CONDITIONER
48	8	48-08-OPN-09	DAYLIGHT	N/A	N/A	AIR COMPRESS			FLOW IS NIL	No	CA TANK BLOW-OFF
48	8	48-08-OPN-10	DAYLIGHT	N/A	N/A	BACK FLOW PREVENTOR			FLOW IS NIL	No	BACK FLOW PREVENTER
48	8	48-08-OPN-11	DAYLIGHT	N/A	N/A	ROOF GUTTER DRAIN			MOSTLY SUMMER	Yes	STORM WATER
48	8	48-08-OPN-12	DAYLIGHT	N/A	N/A	FIRE WATER DRAIN			ANNUAL TESTING	No	FIRE WATER

REPORT # 76

TA	BLDG	OUTLET PIPING NO	EPA OUTFALL #	DRAIN #	ROOM #	ROOM DESCRIPTION	FLOW RATE		PERIODICITY	SEASONAL	SOURCE TYPES
48	8	48-08-OPN-13	DAYLIGHT	N/A	N/A	FIRE WATER DRAIN			ANNUAL TESTING	No	FIRE WATER
48	8	48-08-OPN-14	DAYLIGHT	N/A	N/A	FIRE WATER DRAIN			ANNUAL TESTING	No	FIRE WATER
48	8	48-08-OPN-15	DAYLIGHT	N/A	N/A	FIRE WATER DRAIN			ANNUAL TESTING	No	FIRE WATER
48	17	48-17-OPN-01	13S/SWSC	1CD01	102	CLEAN ROOM			5 DAYS PER WEEK	No	NONE (REMOVED)
48	17	48-17-OPN-01	13S/SWSC	1ED01	102	CLEAN ROOM			FLOW IS NIL	No	HVAC CONDENSATE DRAIN
48	17	48-17-OPN-01	13S/SWSC	1ED01	102	CLEAN ROOM			FLOW IS NIL	No	WATER SYS. DRAIN
48	17	48-17-OPN-01	13S/SWSC	1FD01	102	CLEAN ROOM			FLOW IS NIL	No	FLOOR WASHING
48	17	48-17-OPN-01	13S/SWSC	1FD02	100-A	SHOP			FLOW IS NIL	No	FLOOR WASHING
48	17	48-17-OPN-01	13S/SWSC	1LV01	100-A	RESTROOM			5 DAYS PER WEEK	No	LAVATORY
48	17	48-17-OPN-01	13S/SWSC	1SD01	100-A	JANITOR'S CLOSET			5 DAYS PER WEEK	No	CLEAN-UP
48	17	48-17-OPN-01	13S/SWSC	1SD02	100-A	SHOP			5 DAYS PER WEEK	No	CLEAN-UP
48	17	48-17-OPN-01	13S/SWSC	1TL01	100-A	RESTROOM			5 DAYS PER WEEK	No	TOILET
48	17	48-17-OPN-02	DAYLIGHT	N/A	N/A	FIRE WATER DRAIN			ANNUAL TESTING	No	FIRE WATER
48	17	48-17-OPN-03	DAYLIGHT	N/A	N/A	AIR CONDITIONER			FLOW IS NIL	No	A/C CONDENSATE
48	17	48-17-OPN-04	DAYLIGHT	N/A	N/A	AIR CONDITIONER			FLOW IS NIL	No	A/C CONDENSATE
48	17	48-17-OPN-05	N/A	N/A	N/A	N2 TANK			FLOW IS NIL	No	N2 TANK FILL
48	17	48-17-OPN-06	ATMOSPHERE	N/A	N/A	N2 TANK			FLOW IS NIL	No	N2 TANK PRV
48	17	48-17-OPN-07	N/A	N/A	N/A	N2 TANK			FLOW IS NIL	No	N2 TANK BLDG LINE
48	17	48-17-OPN-08	N/A	N/A		PIPE STUB			NONE	No	NONE
48	17	NONE	HOLDING TANK	1SD03	100-A	SHOP			5 DAYS PER WEEK	No	CLEAN-UP
48	28	48-28-OPN-01	13S/SWSC	1FD01	109	SHOP			FLOW IS NIL	No	COOLING WATER
48	28	48-28-OPN-01	13S/SWSC	1FD02	104	RESTROOM			FLOW IS NIL	No	FLOOR WASHING
48	28	48-28-OPN-01	13S/SWSC	1FD03	107	LASER LAB			FLOW IS NIL	No	FLOOR WASHING
48	28	48-28-OPN-01	13S/SWSC	1FD04	107	LASER LAB			FLOW IS NIL	No	FLOOR WASHING
48	28	48-28-OPN-01	13S/SWSC	1FS01	101	OFFICE			FLOW IS NIL	No	FLOOR WASHING
48	28	48-28-OPN-01	13S/SWSC	1FS02	109	SHOP			FLOW IS NIL	No	FLOOR WASHING
48	28	48-28-OPN-01	13S/SWSC	1FS03	105	EQUIPMENT ROOM			FLOW IS NIL	No	A/C CONDENSATE
48	28	48-28-OPN-01	13S/SWSC	1FS03	105	EQUIPMENT ROOM			FLOW IS NIL	No	BFP DRAIN
48	28	48-28-OPN-01	13S/SWSC	1FS03	105	EQUIPMENT ROOM			FLOW IS NIL	No	COPRESSED AIR TANK DRAIN
48	28	48-28-OPN-01	13S/SWSC	1FS03	105	EQUIPMENT ROOM			FLOW IS NIL	No	WATER HEATER PRV
48	28	48-28-OPN-01	13S/SWSC	1LV01	104	REST ROOM			5 DAYS PER WEEK	No	LAVATORY
48	28	48-28-OPN-01	13S/SWSC	1SD01	101	OFFICE			5 DAYS PER WEEK	No	CLEAN-UP
48	28	48-28-OPN-01	13S/SWSC	1SD02	109	SHOP			5 DAYS PER WEEK	No	CLEAN-UP

REPORT # 76

TA	BLDG	OUTLET PIPING NO	EPA OUTFALL #	DRAIN #	ROOM #	ROOM DESCRIPTION	FLOW RATE		PERIODICITY	SEASONAL	SOURCE TYPES
48	28	48-28-OPN-01	13S/SWSC	1SD03	111	JANITOR'S CLOSET			5 DAYS PER WEEK	No	CLEAN-UP
48	28	48-28-OPN-01	13S/SWSC	1SD04	107	LASER LAB			5 DAYS PER WEEK	No	CLEAN-UP
48	28	48-28-OPN-01	13S/SWSC	1TL01	104	REST ROOM			5 DAYS PER WEEK	No	TOILET
48	28	48-28-OPN-01	13S/SWSC	1UR01	104	REST ROOM			5 DAYS PER WEEK	No	URINAL
48	28	48-28-OPN-01	13S/SWSC	1WF01	N/A	CORRIDOR			5 DAYS PER WEEK	No	WATER FOUNTAIN
48	28	48-28-OPN-02	04A152	1ED01	107	LASER	20	GPM	5 DAYS PER WEEK	No	NON-CONTACT COOLING WATER
48	28	48-28-OPN-03	DAYLIGHT	N/A	N/A	FIRE WATER DRAIN			ANNUAL TESTING	No	FIRE WATER
48	28	48-28-OPN-04	DAYLIGHT	N/A	N/A	FIRE WATER DRAIN			ANNUAL TESTING	No	FIRE WATER
48	28	48-28-OPN-05	DAYLIGHT	N/A	N/A	FIRE WATER DRAIN			ANNUAL TESTING	No	FIRE WATER
48	28	48-28-OPN-06	N/A	N/A	N/A	LN2 TANK			FLOW IS NIL	No	LN2 TANK DRAIN
48	28	48-28-OPN-07	N/A	N/A	N/A	LN2 TANK			FLOW IS NIL	No	LN2 TANK PRV
48	28	48-28-OPN-08	N/A	N/A	N/A	LN2 TANK			FLOW IS NIL	No	LN2 TANK DRAIN
48	28	48-28-OPN-09	N/A	N/A	N/A	LN2 TANK			FLOW IS NIL	No	LN2 TANK FILL
48	29	48-29-OPN-01	13S/SWSC	1LV01	105	REST ROOM			5 DAYS PER WEEK	No	LAVATORY
48	29	48-29-OPN-01	13S/SWSC	1LV02	111	REST ROOM			5 DAYS PER WEEK	No	LAVATORY
48	29	48-29-OPN-01	13S/SWSC	1SD01	107	JANITOR CLOSET			5 DAYS PER WEEK	No	CLEAN-UP
48	29	48-29-OPN-01	13S/SWSC	1SD02	116	BREAK ROOM			5 DAYS PER WEEK	No	CLEAN-UP
48	29	48-29-OPN-01	13S/SWSC	1SH01	105	REST ROOM			5 DAYS PER WEEK	No	SHOWER
48	29	48-29-OPN-01	13S/SWSC	1TL01	105	REST ROOM			5 DAYS PER WEEK	No	TOILET
48	29	48-29-OPN-01	13S/SWSC	1TL02	111	REST ROOM			5 DAYS PER WEEK	No	TOILET
48	29	48-29-OPN-01	13S/SWSC	1UR01	111	REST ROOM			5 DAYS PER WEEK	No	URINAL
48	29	48-29-OPN-01	13S/SWSC	1WF01	N/A	CORRIDOR			5 DAYS PER WEEK	No	WATER FOUNTAIN
48	29	48-29-OPN-02	DAYLIGHT	N/A	N/A	ROOF			MOSTLY SUMMER	Yes	STORM WATER
48	29	48-29-OPN-03	DAYLIGHT	N/A	N/A	ROOF			MOSTLY SUMMER	Yes	STORM WATER
48	29	48-29-OPN-04	DAYLIGHT	N/A	N/A	EVAPORATIVE COOLER			FLOW IS NIL	No	EC CONDENSATE
48	29	48-29-OPN-05	DAYLIGHT	N/A	N/A	EVAPORATIVE COOLER			FLOW IS NIL	No	EC CONDENSATE
48	29	48-29-OPN-06	DAYLIGHT	N/A	N/A	WATER HEATER			FLOW IS NIL	No	WH PRV
48	34	48-30-OPN-01	DAYLIGHT	N/A	N/A	AIR CONDITIONER			FLOW IS NIL	No	AIR CONDITONER
48	34	48-34-OPN-01	13S/SWSC	1FS01	N/A	JANITOR CLOSET			5 DAYS PER WEEK	No	WATER HEATER PRV
48	34	48-34-OPN-01	13S/SWSC	1FS01	N/A	JANITOR CLOSET			5 DAYS PER WEEK	No	CLEAN-UP
48	34	48-34-OPN-01	13S/SWSC	1LV01	110	REST ROOM			5 DAYS PER WEEK	No	LAVATORY
48	34	48-34-OPN-01	13S/SWSC	1LV02	108	REST ROOM			5 DAYS PER WEEK	No	LAVATORY
48	34	48-34-OPN-01	13S/SWSC	1SD01	N/A	CORRIDOR			5 DAYS PER WEEK	No	CLEAN-UP

REPORT # 76

TA	BLDG	OUTLET PIPING NO	EPA OUTFALL #	DRAIN #	ROOM #	ROOM DESCRIPTION	FLOW RATE		PERIODICITY	SEASONAL	SOURCE TYPES
48	34	48-34-OPN-01	13S/SWSC	1SH01	110	REST ROOM			5 DAYS PER WEEK	No	SHOWER
48	34	48-34-OPN-01	13S/SWSC	1TL01	110	REST ROOM			5 DAYS PER WEEK	No	TOILET
48	34	48-34-OPN-01	13S/SWSC	1TL02	108	REST ROOM			5 DAYS PER WEEK	No	TOILET
48	34	48-34-OPN-01	13S/SWSC	1UR01	110	REST ROOM			5 DAYS PER WEEK	No	URINAL
48	34	48-34-OPN-01	13S/SWSC	1WF01	N/A	CORRIDOR			5 DAYS PER WEEK	No	WATER FOUNTAIN
48	34	48-34-OPN-02	DAYLIGHT	N/A	N/A	ROOF			FLOW IS NIL	No	EVAPORATIVE COOLER DRAIN
48	34	48-34-OPN-03	DAYLIGHT	N/A	N/A	ROOF			FLOW IS NIL	No	EVAPORATIVE COOLER DRAIN
48	34	48-34-OPN-04	DAYLIGHT	N/A	N/A	ROOF			MOSTLY SUMMER	Yes	STORM WATER
48	34	48-34-OPN-05	DAYLIGHT	N/A	N/A	ROOF			MOSTLY SUMMER	Yes	STORM WATER
48	45	48-45-OPN-01	13S/SWSC	1FD01	N105	MECHANICAL ROOM			FLOW IS NIL	No	A/C DRAINS (4)
48	45	48-45-OPN-01	13S/SWSC	1FD01	N105	MECHANICAL ROOM			FLOW IS NIL	No	COND DRAIN
48	45	48-45-OPN-01	13S/SWSC	1FD01	N105	MECHANICAL ROOM			FLOW IS NIL	No	CHW DRAIN
48	45	48-45-OPN-01	13S/SWSC	1FD02	N105	MECHANICAL ROOM			FLOW IS NIL	No	CHW DRAIN
48	45	48-45-OPN-01	13S/SWSC	1FD02	N105	MECHANICAL ROOM			FLOW IS NIL	No	COND DRAIN
48	45	48-45-OPN-01	13S/SWSC	1FD02	N105	MECHANICAL ROOM			FLOW IS NIL	No	BFP (2)
48	45	48-45-OPN-01	13S/SWSC	1FD03	N105A	MECHANICAL ROOM			FLOW IS NIL	No	WH PRV (2)
48	45	48-45-OPN-01	13S/SWSC	1FD03	N105A	MECHANICAL ROOM			FLOW IS NIL	No	HVAC CONDENSATE
48	45	48-45-OPN-01	13S/SWSC	1FD03	N105A	MECHANICAL ROOM			FLOW IS NIL	No	BOILER DRAINS (2)
48	45	48-45-OPN-01	13S/SWSC	1FD04	N105A	MECHANICAL ROOM			FLOW IS NIL	No	BOILER PRV (2)
48	45	48-45-OPN-01	13S/SWSC	1FD05	N105A	MECHANICAL ROOM			FLOW IS NIL	No	FLOOR WASHING
48	45	48-45-OPN-02	13S/SWSC	1LV01	107	REST ROOM			5 DAYS PER WEEK	No	LAVATORY
48	45	48-45-OPN-02	13S/SWSC	1LV02	107	REST ROOM			5 DAYS PER WEEK	No	LAVATORY
48	45	48-45-OPN-02	13S/SWSC	1LV03	S103	REST ROOM			5 DAYS PER WEEK	No	LAVATORY
48	45	48-45-OPN-02	13S/SWSC	1LV04	S103	REST ROOM			5 DAYS PER WEEK	No	LAVATORY
48	45	48-45-OPN-02	13S/SWSC	1SD07	S101	LAB			5 DAYS PER WEEK	No	CLEAN-UP
48	45	48-45-OPN-02	13S/SWSC	1SD45	N/A	JANITOR CLOSET			5 DAYS PER WEEK	No	CLEAN-UP
48	45	48-45-OPN-02	13S/SWSC	1SH01	S105	REST ROOM			5 DAYS PER WEEK	No	SHOWER
48	45	48-45-OPN-02	13S/SWSC	1SH02	S105	REST ROOM			5 DAYS PER WEEK	No	SHOWER
48	45	48-45-OPN-02	13S/SWSC	1SH03	S105	REST ROOM			5 DAYS PER WEEK	No	SHOWER
48	45	48-45-OPN-02	13S/SWSC	1SH04	S105	REST ROOM			5 DAYS PER WEEK	No	SHOWER
48	45	48-45-OPN-02	13S/SWSC	1TL01	107	REST ROOM			5 DAYS PER WEEK	No	TOILET
48	45	48-45-OPN-02	13S/SWSC	1TL02	107	REST ROOM			5 DAYS PER WEEK	No	TOILET
48	45	48-45-OPN-02	13S/SWSC	1TL03	S103	REST ROOM			5 DAYS PER WEEK	No	TOILET

REPORT # 76

TA	BLDG	OUTLET PIPING NO	EPA OUTFALL #	DRAIN #	ROOM #	ROOM DESCRIPTION	FLOW RATE		PERIODICITY	SEASONAL	SOURCE TYPES
48	45	48-45-OPN-02	13S/SWSC	1TL04	S103	REST ROOM			5 DAYS PER WEEK	No	TOILET
48	45	48-45-OPN-02	13S/SWSC	1UR01	S103	REST ROOM			5 DAYS PER WEEK	No	URINAL
48	45	48-45-OPN-02	13S/SWSC	1UR02	S103	REST ROOM			5 DAYS PER WEEK	No	URINAL
48	45	48-45-OPN-02	13S/SWSC	1WF02	N/A	CORRIDOR			5 DAYS PER WEEK	No	WATER FOUNTAIN
48	45	48-45-OPN-03	RLW	1AD01	EXT	LAB			MOSTLY SUMMER	Yes	STORM WATER/DUCT WASH
48	45	48-45-OPN-03	RLW	1CD01	E107	LAB			5 DAYS PER WEEK	No	CLEAN-UP
48	45	48-45-OPN-03	RLW	1CD02	E102	LAB			5 DAYS PER WEEK	No	CLEAN-UP
48	45	48-45-OPN-03	RLW	1CD03	E102	LAB			5 DAYS PER WEEK	No	CLEAN-UP
48	45	48-45-OPN-03	RLW	1EEW01	E100B	LAB			FLOW IS NIL	No	EYE WASH
48	45	48-45-OPN-03	RLW	1EEW02	E106	LAB			FLOW IS NIL	No	EYE WASH
48	45	48-45-OPN-03	RLW	1EEW03	E104	LAB			FLOW IS NIL	No	EYE WASH
48	45	48-45-OPN-03	RLW	1EEW04	E107	LAB			FLOW IS NIL	No	EYE WASH
48	45	48-45-OPN-03	RLW	1FD06	N101	LAB			FLOW IS NIL	No	FLOOR WASHING
48	45	48-45-OPN-03	RLW	1FD07	E117	LAB			FLOW IS NIL	No	FLOOR WASHING
48	45	48-45-OPN-03	RLW	1FD08	E100B	LAB			FLOW IS NIL	No	FLOOR WASHING
48	45	48-45-OPN-03	RLW	1FD09	E102	LAB			FLOW IS NIL	No	FLOOR WASHING
48	45	48-45-OPN-03	RLW	1FD10	E101A	CORRIDOR			FLOW IS NIL	No	FLOOR WASHING
48	45	48-45-OPN-03	RLW	1FD11	N/A	CORRIDOR			FLOW IS NIL	No	FLOOR WASHING
48	45	48-45-OPN-03	RLW	1SD01	W106	LAB			5 DAYS PER WEEK	No	CLEAN-UP
48	45	48-45-OPN-03	RLW	1SD02	W106	LAB			5 DAYS PER WEEK	No	CLEAN-UP
48	45	48-45-OPN-03	RLW	1SD03	W108	LAB			5 DAYS PER WEEK	No	CLEAN-UP
48	45	48-45-OPN-03	RLW	1SD04	W108	LAB			5 DAYS PER WEEK	No	CLEAN-UP
48	45	48-45-OPN-03	RLW	1SD05	W110	LAB			5 DAYS PER WEEK	No	CLEAN-UP
48	45	48-45-OPN-03	RLW	1SD06	W110	LAB			5 DAYS PER WEEK	No	CLEAN-UP
48	45	48-45-OPN-03	RLW	1SD08	E101A	LAB			5 DAYS PER WEEK	No	CLEAN-UP
48	45	48-45-OPN-03	RLW	1SD09	E101A	LAB			5 DAYS PER WEEK	No	CLEAN-UP
48	45	48-45-OPN-03	RLW	1SD10	E101A	LAB			5 DAYS PER WEEK	No	CLEAN-UP
48	45	48-45-OPN-03	RLW	1SD11	E101A	LAB			5 DAYS PER WEEK	No	CLEAN-UP
48	45	48-45-OPN-03	RLW	1SD12	N/A	LAB			5 DAYS PER WEEK	No	CLEAN-UP
48	45	48-45-OPN-03	RLW	1SD13	E107	LAB			5 DAYS PER WEEK	No	CLEAN-UP
48	45	48-45-OPN-03	RLW	1SD14	E105	LAB			5 DAYS PER WEEK	No	CLEAN-UP
48	45	48-45-OPN-03	RLW	1SD15	E105	LAB			5 DAYS PER WEEK	No	CLEAN-UP
48	45	48-45-OPN-03	RLW	1SD16	E109	LAB			5 DAYS PER WEEK	No	CLEAN-UP

REPORT # 76

TA	BLDG	OUTLET PIPING NO	EPA OUTFALL #	DRAIN #	ROOM #	ROOM DESCRIPTION	FLOW RATE		PERIODICITY	SEASONAL	SOURCE TYPES
48	45	48-45-OPN-03	RLW	1SD17	E111	LAB			5 DAYS PER WEEK	No	CLEAN-UP
48	45	48-45-OPN-03	RLW	1SD18	E113	LAB			5 DAYS PER WEEK	No	CLEAN-UP
48	45	48-45-OPN-03	RLW	1SD19	E115	LAB			5 DAYS PER WEEK	No	CLEAN UP
48	45	48-45-OPN-03	RLW	1SD20	E115	LAB			5 DAYS PER WEEK	No	CLEAN-UP
48	45	48-45-OPN-03	RLW	1SD21	E117	LAB			5 DAYS PER WEEK	No	CLEAN UP
48	45	48-45-OPN-03	RLW	1SD22	E117	LAB			5 DAYS PER WEEK	No	CLEAN-UP
48	45	48-45-OPN-03	RLW	1SD23	W101	LAB			5 DAYS PER WEEK	No	CLEAN-UP
48	45	48-45-OPN-03	RLW	1SD24	W101	LAB			5 DAYS PER WEEK	No	CLEAN-UP
48	45	48-45-OPN-03	RLW	1SD25	E117	LAB			5 DAYS PER WEEK	No	CLEAN-UP
48	45	48-45-OPN-03	RLW	1SD26	E117	LAB			5 DAYS PER WEEK	No	CLEAN-UP
48	45	48-45-OPN-03	RLW	1SD27	N102	LAB			5 DAYS PER WEEK	No	CLEAN-UP
48	45	48-45-OPN-03	RLW	1SD28	N109	LAB			5 DAYS PER WEEK	No	NONE (REMOVED)
48	45	48-45-OPN-03	RLW	1SD29	N106	LAB			5 DAYS PER WEEK	No	NONE (REMOVED)
48	45	48-45-OPN-03	RLW	1SD30	N111	LAB			5 DAYS PER WEEK	No	NONE (REMOVED)
48	45	48-45-OPN-03	RLW	1SD31	N113	LAB			5 DAYS PER WEEK	No	NONE (REMOVED)
48	45	48-45-OPN-03	RLW	1SD32	E106A	LAB			5 DAYS PER WEEK	No	CLEAN-UP
48	45	48-45-OPN-03	RLW	1SD33	E106B	LAB			5 DAYS PER WEEK	No	CLEAN-UP
48	45	48-45-OPN-03	RLW	1SD34	E106A	LAB			5 DAYS PER WEEK	No	CLEAN-UP
48	45	48-45-OPN-03	RLW	1SD35	E106B	LAB			5 DAYS PER WEEK	No	CLEAN UP
48	45	48-45-OPN-03	RLW	1SD36	E106A	LAB			5 DAYS PER WEEK	No	CLEAN-UP
48	45	48-45-OPN-03	RLW	1SD37	E106B	LAB			5 DAYS PER WEEK	No	CLEAN-UP
48	45	48-45-OPN-03	RLW	1SD38	E104A	LAB			5 DAYS PER WEEK	No	CLEAN-UP
48	45	48-45-OPN-03	RLW	1SD39	E104B	LAB			5 DAYS PER WEEK	No	CLEAN-UP
48	45	48-45-OPN-03	RLW	1SD40	E104A	LAB			5 DAYS PER WEEK	No	CLEAN-UP
48	45	48-45-OPN-03	RLW	1SD41	E104B	LAB			5 DAYS PER WEEK	No	CLEAN UP
48	45	48-45-OPN-03	RLW	1SD42	E104A	LAB			5 DAYS PER WEEK	No	CLEAN-UP
48	45	48-45-OPN-03	RLW	1SD43	E104B	LAB			5 DAYS PER WEEK	No	CLEAN-UP
48	45	48-45-OPN-03	RLW	1SD44	E102	LAB			5 DAYS PER WEEK	No	CLEAN-UP
48	45	48-45-OPN-04	DAYLIGHT	N/A	N/A	FIRE WATER DRAIN			ANNUAL TESTING	No	FIRE WATER
48	45	48-45-OPN-05	DAYLIGHT	N/A	N/A	FIRE WATER DRAIN			ANNUAL TESTING	No	FIRE WATER
48	45	48-45-OPN-06	DAYLIGHT	N/A	N/A	AIR CONDITIONER			FLOW IS NIL	No	A/C CONDENSATE
48	45	48-45-OPN-07	DAYLIGHT	N/A	N/A	AIR CONDITIONER			FLOW IS NIL	No	A/C CONDENSATE
48	45	48-45-OPN-08	DAYLIGHT	N/A	N/A	AIR CONDITIONER			FLOW IS NIL	No	A/C CONDENSATE

REPORT # 76

TA	BLDG	OUTLET PIPING NO	EPA OUTFALL #	DRAIN #	ROOM #	ROOM DESCRIPTION	FLOW RATE		PERIODICITY	SEASONAL	SOURCE TYPES
48	45	48-45-OPN-09	DAYLIGHT	N/A	N/A	AIR CONDITIONER			FLOW IS NIL	No	A/C CONDENSATE
48	45	48-45-OPN-10	DAYLIGHT	RD13	N/A	ROOF			MOSTLY SUMMER	Yes	STORM WATER
48	45	48-45-OPN-11	DAYLIGHT	RD11	N/A	ROOF			MOSTLY SUMMER	Yes	STORM WATER
48	45	48-45-OPN-11	DAYLIGHT	RD12	N/A	ROOF			MOSTLY SUMMER	Yes	STORM WATER
48	45	48-45-OPN-12	DAYLIGHT	RD09	N/A	ROOF			MOSTLY SUMMER	Yes	STORM WATER
48	45	48-45-OPN-12	DAYLIGHT	RD10	N/A	ROOF			MOSTLY SUMMER	Yes	STORM WATER
48	45	48-45-OPN-13	DAYLIGHT	RD06	N/A	ROOF			MOSTLY SUMMER	Yes	STORM WATER
48	45	48-45-OPN-13	DAYLIGHT	RD07	N/A	ROOF			MOSTLY SUMMER	Yes	STORM WATER
48	45	48-45-OPN-13	DAYLIGHT	RD08	N/A	ROOF			MOSTLY SUMMER	Yes	STORM WATER
48	45	48-45-OPN-14	DAYLIGHT	RD04	N/A	ROOF			MOSTLY SUMMER	Yes	STORM WATER
48	45	48-45-OPN-14	DAYLIGHT	RD05	N/A	ROOF			MOSTLY SUMMER	Yes	STORM WATER
48	45	48-45-OPN-15	DAYLIGHT	RD03	N/A	ROOF			MOSTLY SUMMER	Yes	STORM WATER
48	45	48-45-OPN-16	DAYLIGHT	RD02	N/A	ROOF			MOSTLY SUMMER	Yes	STORM WATER
48	45	48-45-OPN-17	DAYLIGHT	RD14	N/A	ROOF			MOSTLY SUMMER	Yes	STORM WATER
48	45	48-45-OPN-17	DAYLIGHT	RD15	N/A	ROOF			MOSTLY SUMMER	Yes	STORM WATER
48	45	48-45-OPN 18	DAYLIGHT	N/A	N/A	ROOF			MOSTLY SUMMER	Yes	STORM WATER
48	45	48-45-OPN-19	DAYLIGHT	N/A	N/A	ROOF			MOSTLY SUMMER	Yes	STORM WATER
48	45	48-45-OPN-20	DAYLIGHT	N/A	N/A	ROOF			MOSTLY SUMMER	Yes	STORM WATER
48	45	48-45-OPN-21	DAYLIGHT	N/A	N/A	ROOF			MOSTLY SUMMER	Yes	STORM WATER
48	45	48-45-OPN-22	DAYLIGHT	N/A	N/A	ROOF			MOSTLY SUMMER	Yes	STORM WATER
48	45	48-45-OPN-23	DAYLIGHT	N/A	N/A	ROOF			MOSTLY SUMMER	Yes	STORM WATER
48	45	48-45-OPN-24	DAYLIGHT	RD06	N/A	ROOF			MOSTLY SUMMER	Yes	STORM WATER
48	45	48-45-OPN-25	DAYLIGHT	N/A	N/A	ROOF			MOSTLY SUMMER	Yes	STORM WATER
48	45	48-45-OPN-26	DAYLIGHT	N/A	N/A	ROOF			MOSTLY SUMMER	Yes	STORM WATER
48	45	48-45-OPN-27	DAYLIGHT	N/A	N/A	ROOF			MOSTLY SUMMER	Yes	STORM WATER
48	45	48-45-OPN-28	DAYLIGHT	N/A	N/A	ROOF			MOSTLY SUMMER	Yes	STORM WATER
48	45	48-45-OPN-29	DAYLIGHT	N/A	N/A	ROOF			MOSTLY SUMMER	Yes	STORM WATER
48	45	48-45-OPN-30	DAYLIGHT	RD01	N/A	ROOF			MOSTLY SUMMER	Yes	STORM WATER
48	45	48-45-OPN-31	DAYLIGHT	N/A	N/A	ROOF			MOSTLY SUMMER	Yes	STORM WATER
48	45	48-45-OPN-32	DAYLIGHT	N/A	N/A	ROOF			MOSTLY SUMMER	Yes	STORM WATER
48	45	48-45-OPN-33	DAYLIGHT	N/A	N/A	LN2 TANK			FLOW IS NIL	No	LN2 TANK DRAIN
48	45	48-45-OPN-34	DAYLIGHT	N/A	N/A	LN2 TANK			FLOW IS NIL	No	LN2 TANK PRV
48	45	48-45-OPN-35	DAYLIGHT	N/A	N/A	LN2 TANK			FLOW IS NIL	No	LV2 TANK FILL

REPORT # 76

TA	BLDG	OUTLET PIPING NO	EPA OUTFALL #	DRAIN #	ROOM #	ROOM DESCRIPTION	FLOW RATE		PERIODICITY	SEASONAL	SOURCE TYPES
48	45	NONE	N/A	1WF01	N/A	CORRIDOR			NONE	No	NONE (NOT CONNECTED)
48	45	NONE	N/A	1WF03	N/A	CORRIDOR			NONE	No	NONE (NOT CONNECTED)
48	46	48-46-OPN-01	13S/SWSC	1WF02		CORRIDOR			5 DAYS PER WEEK	No	WATER FOUNTAIN
48	46	48-46-OPN-02	04A137	1SD02		LAB			5 DAYS PER WEEK	No	CLEAN-UP
48	46	48-46-OPN-02	04A137	1SD03		LAB			5 DAYS PER WEEK	No	CLEAN-UP
48	46	48-46-OPN-03	DAYLIGHT	N/A		A/C AND WATER HEATER			FLOW IS NIL	No	A/C AND WH CONDENSATE
48	46	48-46-OPN-04	DAYLIGHT	N/A		WATER HEATER			FLOW IS NIL	No	WATER HEATER PRV
48	46	48-46-OPN-05	DAYLIGHT	N/A		AIR CONDITIONER			FLOW IS NIL	No	A/C CONDENSATE
48	46	48-46-OPN-06	DAYLIGHT	N/A		AIR CONDITIONER			FLOW IS NIL	No	A/C CONDENSATE
48	46	48-46-OPN-07	DAYLIGHT	N/A		AIR CONDITIONER			FLOW IS NIL	No	A/C CONDENSATE
48	47	48-47-OPN-01	13S/SWSC	1FS01		JANITOR CLOSET			5 DAYS PER WEEK	No	CLEAN-UP
48	47	48-47-OPN-01	13S/SWSC	1LV01		REST ROOM			5 DAYS PER WEEK	No	LAVATORY
48	47	48-47-OPN-01	13S/SWSC	1LV02		REST ROOM			5 DAYS PER WEEK	No	LAVATORY
48	47	48-47-OPN-01	13S/SWSC	1SD01		REST ROOM			5 DAYS PER WEEK	No	CLEAN-UP
48	47	48-47-OPN-01	13S/SWSC	1SH01		REST ROOM			5 DAYS PER WEEK	No	SHOWER
48	47	48-47-OPN-01	13S/SWSC	1TL01		REST ROOM			5 DAYS PER WEEK	No	TOILET
48	47	48-47-OPN-01	13S/SWSC	1TL02		REST ROOM			5 DAYS PER WEEK	No	TOILET
48	47	48-47-OPN-01	13S/SWSC	1UR01		REST ROOM			5 DAYS PER WEEK	No	URINAL
48	47	48-47-OPN-01	13S/SWSC	1WF01	N/A	CORRIDOR			5 DAYS PER WEEK	No	WATER FOUNTAIN
48	47	48-47-OPN-02	DAYLIGHT	N/A	N/A	EVAPORATIVE COOLER			FLOW IS NIL	No	EC CONDENSATE
48	47	48-47-OPN-03	DAYLIGHT	N/A	N/A	EVAPORATIVE COOLER			FLOW IS NIL	No	WATER HEATER PRV
48	56	48-56-OPN-01	13S/SWSC	1FS01	100E	JANITOR CLOSET			5 DAYS PER WEEK	No	WATER HEATER PRV
48	56	48-56-OPN-01	13S/SWSC	1FS01	100E	JANITOR CLOSET			5 DAYS PER WEEK	No	CLEAN-UP
48	56	48-56-OPN-01	13S/SWSC	1LV01	111	REST ROOM			5 DAYS PER WEEK	No	LAVATORY
48	56	48-56-OPN-01	13S/SWSC	1LV02	113	REST ROOM			5 DAYS PER WEEK	No	LAVATORY
48	56	48-56-OPN-01	13S/SWSC	1SH01	113	REST ROOM			5 DAYS PER WEEK	No	SHOWER
48	56	48-56-OPN-01	13S/SWSC	1TL01	111	REST ROOM			5 DAYS PER WEEK	No	TOILET
48	56	48-56-OPN-01	13S/SWSC	1TL02	113	REST ROOM			5 DAYS PER WEEK	No	TOILET
48	56	48-56-OPN-01	13S/SWSC	1WF01	N/A	CORRIDOR			5 DAYS PER WEEK	No	WATER FOUNTAIN
48	56	48-56-OPN-02	DAYLIGHT	N/A	N/A	ROOF			MOSTLY SUMMER	Yes	STORM WATER
48	57	48-57-OPN-01	13S/SWSC	1DW01	102	BREAK ROOM			5 DAYS PER WEEK	No	DISHWASHER
48	57	48-57-OPN-01	13S/SWSC	1SD01	102	BREAK ROOM			5 DAYS PER WEEK	No	CLEAN-UP
48	57	48-57-OPN-01	13S/SWSC	1SD02	102	BREAK ROOM			5 DAYS PER WEEK	No	CLEAN-UP

REPORT # 76

TA	BLDG	OUTLET PIPING NO	EPA OUTFALL #	DRAIN #	ROOM #	ROOM DESCRIPTION	FLOW RATE		PERIODICITY	SEASONAL	SOURCE TYPES
48	57	48-57-OPN-02	DAYLIGHT	N/A	N/A	EVAPORATIVE COOLER			FLOW IS NIL	No	EVAPORATIVE COOLER DRAIN
48	57	48-57-OPN-03	DAYLIGHT	N/A	N/A	WATER HEATER			FLOW IS NIL	No	WH PRV
48	57	48-57-OPN-04	DAYLIGHT	N/A	N/A	ROOF			MOSTLY SUMMER	Yes	STORM WATER

Please print or type in the unshaded areas only.

EPA I.D. NUMBER (copy from Item 1 of Form 1)
NM0890010515

Form Approved
OMB No. 2040-0086
Approval expires 3-31-88

FORM 2C NPDES

EPA

U.S. ENVIRONMENTAL PROTECTION AGENCY
APPLICATION FOR PERMIT TO DISCHARGE WASTEWATER
EXISTING MANUFACTURING, COMMERCIAL, MINING AND SILVICULTURAL OPERATIONS
Consolidated Permits Program

I. OUTFALL LOCATION

For each outfall, list the latitude and longitude of its location to the nearest 15 seconds and the name of the receiving water.

A. OUTFALL NUMBER (list)	B. LATITUDE (deg.)	(min.)	(sec.)	C. LONGITUDE (deg.)	(min.)	(sec.)	D. RECEIVING WATER (name)
04A016	35	52	1	106	19	20	Tributary to Mortandad Canyon, an ephemeral tributary to Rio Grande

II. FLOWS, SOURCES OF POLLUTION, AND TREATMENT TECHNOLOGIES

A. Attach a line drawing showing the water flow through the facility. Indicate sources of intake water, operations contributing wastewater to the effluent, and treatment units labeled to correspond to the more detailed descriptions in Item B. Construct a water balance on the line drawing by showing average flows between intakes, operations, treatment units, and outfalls. If a water balance cannot be determined (e.g., for certain mining activities), provide a pictorial description of the nature and amount of any sources of water and any collection or treatment measures.

B. For each outfall, provide a description of: (1) All operations contributing wastewater to the effluent, including process wastewater, sanitary wastewater, cooling water, and storm water runoff; (2) The average flow contributed by each operation; and (3) The treatment received by the wastewater. Continue on additional sheets if necessary.

1. OUTFALL NO. (list)	2. OPERATION(S) CONTRIBUTING FLOW: a. OPERATION (list)	b. AVERAGE FLOW (include units)	3. TREATMENT: a. DESCRIPTION	b. LIST CODES FROM TABLE 2C-1	
04A016	48-1-OPN-2				
	Magnet cooling	6.5 GPM	None		
	Laser cooling	2 GPM	None		

OFFICIAL USE ONLY (effluent guidelines sub-categories)

CONTINUED FROM THE FRONT

C. Except for storm runoff, leaks, or spills, are any of the discharges described in Items II-A or B intermittent or seasonal?

☒ YES (complete the following table) ☐ NO (go to Section III)

1. OUTFALL NUMBER (list)	2. OPERATION(s) CONTRIBUTING FLOW (list)	3. FREQUENCY		4. FLOW				
		a. DAYS PER WEEK (specify average)	b. MONTHS PER YEAR (specify average)	a. FLOW RATE (in MGD)		b. TOTAL VOLUME (specify with units)		c. DURATION (in days)
				i. LONG TERM AVERAGE	ii. MAXIMUM DAILY	i. LONG TERM AVERAGE	ii. MAXIMUM DAILY	
04A016	Non-contact cooling water	5	12	0.0032	0.0043	3200 GPD	4300 GPD	260 day/yr

III. PRODUCTION

A. Does an effluent guideline limitation promulgated by EPA under Section 304 of the Clean Water Act apply to your facility?

☐ YES (complete Item III-B) ☒ NO (go to Section IV)

B. Are the limitations in the applicable effluent guideline expressed in terms of production (or other measure of operation)?

☐ YES (complete Item III-C) ☐ NO (go to Section IV)

C. If you answered "yes" to Item III-B, list the quantity which represents an actual measurement of your level of production, expressed in the terms and units used in the applicable effluent guideline, and indicate the affected outfalls.

1. AVERAGE DAILY PRODUCTION			2. AFFECTED OUTFALLS (list outfall number)
a. QUANTITY PER DAY	b. UNITS OF MEASURE	c. OPERATION, PRODUCT, MATERIAL ETC. (specify)	

IV. IMPROVEMENTS

A. Are you now required by any Federal, State or local authority to meet any implementation schedule for the construction, upgrading or operation of wastewater treatment equipment or practices or any other environmental programs which may affect the discharges described in this application? This includes, but is not limited to, permit conditions, administrative or enforcement orders, enforcement compliance schedule letters, stipulations, court orders, and grant or loan conditions.

☐ YES (complete the following table) ☐ NO (go to Item IV-B)

1. IDENTIFICATION OF CONDITION, AGREEMENT, ETC.	2. AFFECTED OUTFALLS		3. BRIEF DESCRIPTION OF PROJECT	4. FINAL COMPLIANCE DATE	
	a. NO.	b. SOURCE OF DISCHARGE		a. REQ. DATE	b. PROJ. DATE
EPA Docket No. VI-92-1306		All	Complete Waste Stream Characterization surveys and implement corrective actions.	NVN	NN

B. OPTIONAL: You may attach additional sheets describing any additional water pollution control programs (or other environmental projects which may affect your discharges) you now have underway or which you plan. Indicate whether each program is now underway or planned, and indicate your actual or planned schedules for construction. ☐ MARK "X" IF DESCRIPTION OF ADDITIONAL CONTROL PROGRAMS IS ATTACHED

CONTINUE ON PAGE 3

EPA I.D. NUMBER (copy from Item 1 of Form 1)
NM0890010515

Form Approved.
OMB No. 2040-0086
Approval expires 7-31-88

V. INTAKE AND EFFLUENT CHARACTERISTICS

A, B, & C: See instructions before proceeding — Complete one set of tables for each outfall — Annotate the outfall number in the space provided. NOTE: Tables V-A, V-B, and V-C are included on separate sheets numbered V-1 through V-9.

D. Use the space below to list any of the pollutants listed in Table 2c-3 of the instructions, which you know or have reason to believe is discharged or may be discharged from any outfall. For every pollutant you list, briefly describe the reasons you believe it to be present and report any analytical data in your possession.

1. POLLUTANT	2. SOURCE	1. POLLUTANT	2. SOURCE
see datasheet			

VI. POTENTIAL DISCHARGES NOT COVERED BY ANALYSIS

Is any pollutant listed in Item V-C a substance or a component of a substance which you currently use or manufacture as an intermediate or final product or byproduct?

☐ YES (list all such pollutants below) ☒ NO (go to Item VI-B)

CONTINUED FROM THE FRONT

VII. BIOLOGICAL TOXICITY TESTING DATA

Do you have any knowledge or reason to believe that any biological test for acute or chronic toxicity has been made on any of your discharges or on a receiving water in relation to your discharge within the last 3 years?

☐ YES *(identify the test(s) and describe their purposes below)* ☒ NO *(go to Section VIII)*

VIII. CONTRACT ANALYSIS INFORMATION

Were any of the analyses reported in Item V performed by a contract laboratory or consulting firm?

☐ YES *(list the name, address, and telephone number of, and pollutants analyzed by, each such laboratory or firm below)* ☐ NO *(go to Section IX)*

A. NAME	B. ADDRESS	C. TELEPHONE (area code & no.)	D. POLLUTANTS ANALYZED (list)

IX. CERTIFICATION

I certify under penalty of law that this document and all attachments were prepared under my direction or supervision in accordance with a system designed to assure that qualified personnel properly gather and evaluate the information submitted. Based on my inquiry of the person or persons who manage the system or those persons directly responsible for gathering the information, the information submitted is, to the best of my knowledge and belief, true, accurate, and complete. I am aware that there are significant penalties for submitting false information, including the possibility of fine and imprisonment for knowing violations.

A. NAME & OFFICIAL TITLE (type or print)	B. PHONE NO. (area code & no.)
JERRY L. BELLOWS, AREA MANAGER, DOE	505-667-5105
ALLEN J. TIEDMAN, ASSOC. DIRECTOR FOR OPERATIONS	505-667-9390
C. SIGNATURE	D. DATE SIGNED

Data from worst case composite.

PLEASE PRINT OR TYPE IN THE UNSHADED AREAS ONLY. You may report some or all of this information on separate sheets (use the same format) instead of completing these pages. SEE INSTRUCTIONS.

EPA I.D. NUMBER (copy from Item 1 of Form 1): NM0890010515

Form Approved. OMB No. 2040-0086. Approval expires 7-31-88

V. INTAKE AND EFFLUENT CHARACTERISTICS (continued from page 3 of Form 2-C)

OUTFALL NO. 04A016

PART A - You must provide the results of at least one analysis for every pollutant in this table. Complete one table for each outfall. See instructions for additional details.

1. POLLUTANT	2. EFFLUENT a. MAXIMUM DAILY VALUE (1) CONCENTRATION	(2) MASS	b. MAXIMUM 30 DAY VALUE (if available) (1) CONCENTRATION	(2) MASS	c. LONG TERM AVRG. VALUE (if available) (1) CONCENTRATION	(2) MASS	d. NO. OF ANALYSES	3. UNITS (specify if blank) a. CONCENTRATION	b. MASS	4. INTAKE (optional) a. LONG TERM AVERAGE VALUE (1) CONCENTRATION	(2) MASS	b. NO. OF ANALYSES
a. Biochemical Oxygen Demand (BOD)	< 2.0	< 32.6						mg/l	g/d			
b. Chemical Oxygen Demand (COD)	< 10.0	< 162.8						mg/l	g/d			
c. Total Organic Carbon (TOC)	0.6	9.6						mg/l	g/d			
d. Total Suspended Solids (TSS)	18.0	293.0						mg/l	g/d			
e. Ammonia (as N)	< 0.1	< 1.628						mg/l	g/d			
f. Flow	VALUE 4300		VALUE		VALUE			gal/day		VALUE		
g. Temperature (winter)	VALUE 13.9		VALUE		VALUE			°C		VALUE		
h. Temperature (summer)	VALUE N/A		VALUE		VALUE			°C		VALUE		
i. pH	MINIMUM 8.45	MAXIMUM 8.80	MINIMUM	MAXIMUM				STANDARD UNITS				

PART B - Mark "X" in column 2-a for each pollutant you know or have reason to believe is present. Mark "X" in column 2-b for each pollutant you believe to be absent. If you mark column 2a for any pollutant which is limited either directly, or indirectly but expressly, in an effluent limitations guideline, you must provide the results of at least one analysis for that pollutant. For other pollutants for which you mark column 2a, you must provide quantitative data or an explanation of their presence in your discharge. Complete one table for each outfall. See the instructions for additional details and requirements.

1. POLLUTANT AND CAS NO. (if available)	2. MARK "X" a. EFFLUENT PRESENT	b. EFFLUENT ABSENT	3. EFFLUENT a. MAXIMUM DAILY VALUE (1) CONCENTRATION	(2) MASS	b. MAXIMUM 30 DAY VALUE (if available) (1) CONCENTRATION	(2) MASS	c. LONG TERM AVRG. VALUE (if available) (1) CONCENTRATION	(2) MASS	d. NO. OF ANALYSES	4. UNITS a. CONCENTRATION	b. MASS	5. INTAKE (optional) a. LONG TERM AVERAGE VALUE (1) CONCENTRATION	(2) MASS	b. NO. OF ANALYSES
a. Bromide (24959-67-9)			< 0.5	< 8.1						mg/l	g/d			
b. Chlorine, Total Residual	X		0.05	0.0						mg/l	mg/d			
c. Color	X		7.0							units				
d. Fecal Coliform		X												
e. Fluoride (16984-48-8)	X		0.21	3.4						mg/l	g/d			
f. Nitrate-Nitrite (as N)	X		0.304	4.9						mg/l	g/d			

DOUBLE SIDED
NON-FONDU FOLD

ITEM V-B CONTINUED FROM FRONT

1. POLLUTANT AND CAS NO. (if available)	2. MARK "X" a. PRESENT	b. ABSENT	3. EFFLUENT a. MAXIMUM DAILY VALUE (1) CONCENTRATION	(2) MASS	b. MAXIMUM 30 DAY VALUE (if available) (1) CONCENTRATION	(2) MASS	c. LONG TERM AVRG. VALUE (if available) (1) CONCENTRATION	(2) MASS	d. NO. OF ANALYSES	4. UNITS a. CONCENTRATION	b. MASS	5. INTAKE (optional) a. LONG TERM AVERAGE VALUE (1) CONCENTRATION	(2) MASS	b. NO. OF ANALYSES
g. Nitrogen, Total Organic (as N)		X	< 0.5	< 8.1						mg/l	g/d			
h. Oil and Grease		X	< 1.05	< 17.1						mg/l	g/d			
i. Phosphorus (as P), Total (7723-14-0)	X		0.05	0.8						mg/l	g/d			
j. Radioactivity														
(1) Alpha, Total	X		0.1	1.6						pCi/l	nCi/d			
(2) Beta, Total	X		6.6	107.4						pCi/l	nCi/d			
(3) Radium, Total	X													
(4) Radium 226, Total	X		0.06	1.0						pCi/l	nCi/d			
k. Sulfate (as SO_4) (14808-79-8)	X		3.16	51.4						mg/l	g/d			
l. Sulfide (as S)		X		0.0						mg/l	mg/d			
m. Sulfite (as SO_3) (14265-45-3)		X	< 0.05	< 0.8						mg/l	g/d			
n. Surfactants		X	< 0.1	< 1.6						mg/l	g/d			
o. Aluminum, Total (7429-90-5)		X	< 0.04	< 0.7						mg/l	g/d			
p. Barium, Total (7440-39-3)	X		0.03	0.5						mg/l	g/d			
q. Boron, Total (7440-42-8)	X		0.02	0.3						mg/l	g/d			
r. Cobalt, Total (7440-48-4)		X	< 0.1	< 1.6						mg/l	g/d			
s. Iron, Total (7439-89-6)	X		0.41	6.7						mg/l	g/d			
t. Magnesium, Total (7439-96-4)	X		2.5	40.7						mg/l	g/d			
u. Molybdenum, Total (7439-98-7)		X	< 0.02	< 0.3						mg/l	g/d			
v. Manganese, Total (7439-96-5)	X		0.01	0.2						mg/l	g/d			
w. Tin, Total (7440-31-5)		X	< 0.050	< 0.8						mg/l	g/d			
x. Titanium, Total (7440-32-6)		X	< 0.004	< 65.1						mg/l	mg/d			

CONTINUE ON PAGE V-3

NON-CONFORM

EPA I.D. NUMBER (copy from Item 1 of Form 1)	OUTFALL NUMBER
NM0890010515	04A016

Form Approved
OMB No. 2040-0086
Approval expires 7-31-88

CONTINUED FROM PAGE 3 OF FORM 2-C

PART C - If you are a primary industry and this outfall contains process wastewater, refer to Table 2c-2 in the instructions to determine which of the GC/MS fractions you must test for. Mark "X" in column 2-a for all such GC/MS fractions that apply to your industry and for ALL toxic metals, cyanides, and total phenols. If you are not required to mark column 2-a (secondary industries, nonprocess wastewater outfalls, and nonrequired GC/MS fractions), mark "X" in column 2-b for each pollutant you know or have reason to believe is present. Mark "X" in column 2-c for each pollutant you believe is absent. If you mark column 2a for any pollutant, you must provide the results of at least one analysis for that pollutant. If you mark column 2b for any pollutant, you must provide the results of at least one analysis for that pollutant if you know or have reason to believe it will be discharged in concentrations of 10 ppb or greater. If you mark column 2b for acrolein, acrylonitrile, 2,4 dinitrophenol, or 2-methyl-4, 6 dinitrophenol, you must provide the results of at least one analysis for each of these pollutants which you know or have reason to believe that you discharge in concentrations of 100 ppb or greater. Otherwise, for pollutants for which you mark column 2b, you must either submit at least one analysis or briefly describe the reasons the pollutant is expected to be discharged. Note that there are 7 pages to this part; please review each carefully. Complete one table (all 7 pages) for each outfall. See instructions for additional details and requirements.

1. POLLUTANT AND CAS NUMBER (if available)	2. MARK "X"			3. EFFLUENT							4. UNITS		5. INTAKE (optional)		
	a. TESTING REQUIRED	b. BELIEVED PRESENT	c. BELIEVED ABSENT	a. MAXIMUM DAILY VALUE		b. MAXIMUM 30 DAY VALUE (if available)		c. LONG TERM AVRG. VALUE (if available)		d. NO. OF ANALYSES	a. CONCENTRATION	b. MASS	a. LONG TERM AVERAGE VALUE		b. NO. OF ANALYSES
				(1) CONCENTRATION	(2) MASS	(1) CONCENTRATION	(2) MASS	(1) CONCENTRATION	(2) MASS				(1) CONCENTRATION	(2) MASS	
METALS, CYANIDE, AND TOTAL PHENOLS															
1M. Antimony, Total (7440-36-0)			X	< 0.050	< 0.8						mg/l	g/d			
2M. Arsenic, Total (7440-38-2)		X		0.002	32.6						mg/l	mg/d			
3M. Beryllium, Total, 7440-41-7)			X	< 0.001	< 16.3						mg/l	mg/d			
4M. Cadmium, Total (7440-43-9)			X	< 0.010	< 0.2						mg/l	g/d			
5M. Chromium, Total (7440-47-3)		X		0.040	0.7						mg/l	g/d			
6M. Copper, Total (7440-50-8)		X		0.031	0.5						mg/l	g/d			
7M. Lead, Total (7439-92-1)			X	< 0.050	< 0.8						mg/l	g/d			
8M. Mercury, Total (7439-97-6)			X	< 0.0002	< 3.3						mg/l	mg/d			
9M. Nickel, Total (7440-02-0)		X		0.06	1.0						mg/l	g/d			
10M. Selenium, Total (7782-49-2)			X	< 0.001	< 16.3						mg/l	mg/d			
11M. Silver, Total (7440-22-4)			X	< 0.010	< 0.2						mg/l	g/d			
12M. Thallium, Total (7440-28-0)			X	< 0.4	< 6.5						mg/l	g/d			
13M. Zinc, Total (7440-66-6)		X		0.043	0.7						mg/l	g/d			
14M. Cyanide, Total (57-12-5)			X	0.01	0.2						mg/l	g/d			
15M. Phenols, Total			X	< 0.01	< 0.2						mg/l	g/d			
DIOXIN															
2,3,7,8-Tetrachlorodibenzo-P-Dioxin (1764-01-6)			X	DESCRIBE RESULTS											

CONTINUE ON REVERSE

1. POLLUTANT AND CAS NUMBER (if available)	2. MARK "X" a. TEST PROCEDURE	b. BELIEVED PRESENT	c. BELIEVED ABSENT	3. EFFLUENT a. MAXIMUM DAILY VALUE (1) CONCENTRATION	(2) MASS	b. MAXIMUM 30 DAY VALUE (if available) (1) CONCENTRATION	(2) MASS	c. LONG TERM AVRG. VALUE (if available) (1) CONCENTRATION	(2) MASS	d. NO. OF ANALYSES	4. UNITS a. CONCENTRATION	b. MASS	5. INTAKE (optional) a. LONG TERM AVERAGE VALUE (1) CONCENTRATION	(2) MASS	b. NO. OF ANALYSES
GC/MS FRACTION — VOLATILE COMPOUNDS															
1V. Acrolein (107-02-8)			X												
2V. Acrylonitrile (107-13-1)			X												
3V. Benzene (71-43-2)			X	< 0.005	< 81.4						mg/l	mg/d			
4V. Bis (Chloromethyl) Ether (542-88-1)			X												
5V. Bromoform (75-25-2)			X	< 0.005	< 81.4						mg/l	mg/d			
6V. Carbon Tetrachloride (56-23-5)			X	< 0.005	< 81.4						mg/l	mg/d			
7V. Chlorobenzene (108-90-7)			X	< 0.005	< 81.4						mg/l	mg/d			
8V. Chlorodibromomethane (124-48-1)			X	< 0.005	< 81.4						mg/l	mg/d			
9V. Chloroethane (75-00-3)			X	< 0.010	< 0.2						mg/l	g/d			
10V. 2-Chloroethylvinyl Ether (110-75-8)			X												
11V. Chloroform (67-66-3)			X	< 0.005	< 81.4						mg/l	mg/d			
12V. Dichlorobromomethane (75-27-4)			X	< 0.005	< 81.4						mg/l	mg/d			
13V. Dichlorodifluoromethane (75-71-8)			X												
14V. 1,1-Dichloroethane (75-34-3)			X	< 0.005	< 81.4						mg/l	mg/d			
15V. 1,2 Dichloroethane (107-06-2)			X	< 0.005	< 81.4						mg/l	mg/d			
16V. 1,1-Dichloroethylene (75-35-4)			X	< 0.005	< 81.4						mg/l	mg/d			
17V. 1,2-Dichloropropane (78-87-5)			X	< 0.005	< 81.4						mg/l	kg/d			
18V. 1,3-Dichloropropylene (542-75-6)			X	<	< 0.0						mg/l	mg/d			
19V. Ethylbenzene (100-41-4)			X	< 0.005	< 81.4						mg/l	mg/d			
20V. Methyl Bromide (74-83-9)			X	< 0.010	< 0.2						mg/l	g/d			
21V. Methyl Chloride (74-87-3)			X	< 0.010	< 0.2						mg/l	g/d			

CONTINUE ON PAGE V-1

CONTINUED FROM PAGE V-4

EPA I.D. NUMBER (copy from Item 1 of Form 1): NM0890010515

OUTFALL NUMBER: 04A016

OMB No. 2040-0086
Approval expires 7-31-88

1. POLLUTANT AND CAS NUMBER (if available)	2. MARK "X" a. TEST and BE-LIEVE PRESENT	b. BE-LIEVE PRESENT	c. BE-LIEVE ABSENT	3. EFFLUENT a. MAXIMUM DAILY VALUE (1) CONCENTRATION	(2) MASS	b. MAXIMUM 30 DAY VALUE (if available) (1) CONCENTRATION	(2) MASS	c. LONG TERM AVRG. VALUE (if available) (1) CONCENTRATION	(2) MASS	d. NO. OF ANALYSES	4. UNITS a. CONCENTRATION	b. MASS	5. INTAKE (optional) a. LONG TERM AVERAGE VALUE (1) CONCENTRATION	(2) MASS	b. NO. OF ANALYSES
GC/MS FRACTION — VOLATILE COMPOUNDS (continued)															
22V. Methylene Chloride (75-09-2)			X	< 0.005	< 81.4						mg/l	mg/d			
23V. 1,1,2,2-Tetrachloroethane (79-34-5)			X	< 0.005	< 81.4						mg/l	mg/d			
24V. Tetrachloroethylene (127-18-4)			X	< 0.005	< 81.4						mg/l	mg/d			
25V. Toluene (108-88-3)			X	< 0.005	< 81.4						mg/l	mg/d			
26V. 1,2-Trans-Dichloroethylene (156-60-5)			X	< 0.005	< 81.4						mg/l	mg/d			
27V. 1,1,1-Trichloroethane (71-55-6)			X	< 0.005	< 81.4						mg/l	mg/d			
28V. 1,1,2-Trichloroethane (79-00-5)			X	< 0.005	< 81.4						mg/l	mg/d			
29V. Trichloroethylene (79-01-6)			X	< 0.005	< 81.4						mg/l	mg/d			
30V. Trichlorofluoromethane (75-69-4)			X	< 0.005	< 81.4						mg/l	mg/d			
31V. Vinyl Chloride (75-01-4)			X	< 0.010	< 0.2						mg/l	g/d			
GC/MS FRACTION — ACID COMPOUNDS															
1A. 2-Chlorophenol (95-57-8)			X	< 0.010	< 0.2						mg/l	g/d			
2A. 2,4-Dichlorophenol (120-83-2)			X	< 0.010	< 0.2						mg/l	g/d			
3A. 2,4-Dimethylphenol (105-67-9)			X	< 0.010	< 0.2						mg/l	g/d			
4A. 4,6-Dinitro-O-Cresol (534-52-1)			X	< 0.010	< 0.2						mg/l	g/d			
5A. 2,4-Dinitrophenol (51-28-5)			X	< 0.010	< 0.2						mg/l	g/d			
6A. 2 Nitrophenol (88-75-5)			X	< 0.010	< 0.2						mg/l	g/d			
7A. 4 Nitrophenol (100-02-7)			X	< 0.010	< 0.2						mg/l	g/d			
8A. P-Chloro-M-Cresol (59-50-7)			X	< 0.010	< 0.2						mg/l	g/d			
9A. Pentachlorophenol (87-86-5)			X	< 0.010	< 0.2						mg/l	g/d			
10A. Phenol (108-95-2)			X	< 0.010	< 0.2						mg/l	g/d			
11A. 2,4,6-Trichlorophenol (88-06-2)			X	< 0.010	< 0.2						mg/l	g/d			

CONTINUE ON REVERSE

CONTINUED FROM THE FRONT

1. POLLUTANT AND CAS NUMBER (if available)	2. MARK "X" a. Believed Absent	b. Believed Present	c. Believed Absent	3. EFFLUENT a. MAXIMUM DAILY VALUE (1) Concentration	(2) Mass	b. MAXIMUM 30 DAY VALUE (if available) (1) Concentration	(2) Mass	c. LONG TERM AVRG. VALUE (if available) (1) Concentration	(2) Mass	d. NO. OF ANALYSES	4. UNITS a. CONCENTRATION	b. MASS	5. INTAKE (optional) a. LONG TERM AVERAGE VALUE (1) Concentration	(2) Mass	b. NO. OF ANALYSES
GC/MS FRACTION – BASE/NEUTRAL COMPOUNDS															
1B. Acenaphthene (83-32-9)			X	< 0.010	< 0.2						mg/l	mg/d			
2B. Acenaphtylene (208-96-8)			X	< 0.010	< 0.2						mg/l	mg/d			
3B. Anthracene (120-12-7)			X	< 0.010	< 0.2						mg/l	mg/d			
4B. Benzidine (92-87-5)			X	< 0.010	< 0.2						mg/l	mg/d			
5B. Benzo (a) Anthracene (56-55-3)			X	< 0.010	< 0.2						mg/l	mg/d			
6B. Benzo (a) Pyrene (50-32-8)			X	< 0.010	< 0.2						mg/l	mg/d			
7B. 3,4-Benzo-fluoranthene (205-99-2)			X	< 0.010	< 0.2						mg/l	mg/d			
8B. Benzo (ghi) Perylene (191-24-2)			X	< 0.010	< 0.2						mg/l	mg/d			
9B. Benzo (k) Fluoranthene (207-08-9)			X	< 0.010	< 0.2						mg/l	mg/d			
10B. Bis (2-Chloro-ethoxy) Methane (111-91-1)			X	< 0.010	< 0.2						mg/l	mg/d			
11B. Bis (2-Chloro-ethyl) Ether (111-44-4)			X	< 0.010	< 0.2						mg/l	mg/d			
12B. Bis (2-Chloro-propyl) Ether (102-80-1)			X	< 0.010	< 0.2						mg/l	mg/d			
13B. Bis (2-Ethyl-hexyl) Phthalate (117-81-7)			X	< 0.010	< 0.2						mg/l	mg/d			
14B. 4-Bromo-phenyl Phenyl Ether (101-55-3)			X	< 0.010	< 0.2						mg/l	mg/d			
15B. Butyl Benzyl Phthalate (85-68-7)			X	< 0.010	< 0.2						mg/l	mg/d			
16B. 2-Chloro-naphthalene (91-58-7)			X	< 0.010	< 0.2						mg/l	mg/d			
17B. 4-Chloro-phenyl Phenyl Ether (7005-72-3)			X	< 0.010	< 0.2						mg/l	mg/d			
18B. Chrysene (218-01-9)			X	< 0.010	< 0.2						mg/l	mg/d			
19B. Dibenzo (a,h) Anthracene (53-70-3)			X	< 0.010	< 0.2						mg/l	mg/d			
20B. 1,2-Dichloro-benzene (95-50-1)			X	< 0.010	< 0.2						mg/l	mg/d			
21B. 1,3-Dichloro-benzene (541-73-1)			X	< 0.010	< 0.2						mg/l	g/d			

CONTINUE ON PAGE V-7

CONTINUED FROM PAGE V-6

EPA I.D. NUMBER (copy from Item 1 of Form 1): NM0890010515

OUTFALL NUMBER: 04A016

Form Approved. OMB No. 2040-0086. Approval expires 7-31-88

1. POLLUTANT AND CAS NUMBER (if available)	2. MARK "X" a. Treatment Equipment Available	b. Believed Present	c. Believed Absent	3. EFFLUENT a. MAXIMUM DAILY VALUE (1) Concentration	(2) Mass	b. MAXIMUM 30 DAY VALUE (if available) (1) Concentration	(2) Mass	c. LONG TERM AVRG. VALUE (if available) (1) Concentration	(2) Mass	d. NO. OF ANALYSES	4. UNITS a. CONCENTRATION	b. MASS	5. INTAKE (optional) a. LONG TERM AVERAGE VALUE (1) Concentration	(2) Mass	b. NO. OF ANALYSES
GC/MS FRACTION – BASE/NEUTRAL COMPOUNDS (continued)															
22B. 1,4-Dichlorobenzene (106-46-7)			X	< 0.010	< 0.2						mg/l	mg/d			
23B. 3,3'-Dichlorobenzidine (91-94-1)			X	< 0.010	< 0.2						mg/l	mg/d			
24B. Diethyl Phthalate (84-66-2)			X	< 0.010	< 0.2						mg/l	mg/d			
25B. Dimethyl Phthalate (131-11-3)			X	< 0.010	< 0.0						mg/l	mg/d			
26B. Di-N-Butyl Phthalate (84-74-2)			X	< 0.010	< 0.2						mg/l	mg/d			
27B. 2,4-Dinitrotoluene (121-14-2)			X	< 0.010	< 0.2						mg/l	mg/d			
28B. 2,6-Dinitrotoluene (606-20-2)			X	< 0.010	< 0.2						mg/l	mg/d			
29B. Di-N-Octyl Phthalate (117-84-0)			X	< 0.010	< 0.2						mg/l	mg/d			
30B. 1,2-Diphenylhydrazine (as Azobenzene) (122-66-7)			X	< 0.010	< 0.2						mg/l	mg/d			
31B. Fluoranthene (206-44-0)			X	< 0.010	< 0.2						mg/l	mg/d			
32B. Fluorene (86-73-7)			X	< 0.010	< 0.2						mg/l	g/d			
33B. Hexachlorobenzene (118-74-1)			X	< 0.010	< 0.2						mg/l	mg/d			
34B. Hexachlorobutadiene (87-68-3)			X	< 0.010	< 0.2						mg/l	mg/d			
35B. Hexachlorocyclopentadiene (77-47-4)			X	< 0.010	< 0.2						mg/l	mg/d			
36B. Hexachloroethane (67-72-1)			X	< 0.010	< 0.2						mg/l	mg/d			
37B. Indeno (1,2,3-cd) Pyrene (193-39-5)			X	< 0.010	< 0.2						mg/l	mg/d			
38B. Isophorone (78-59-1)			X	< 0.010	< 0.2						mg/l	mg/d			
39B. Naphthalene (91-20-3)			X	< 0.010	< 0.2						mg/l	mg/d			
40B. Nitrobenzene (98-95-3)			X	< 0.010	< 0.2						mg/l	mg/d			
41B. N-Nitrosodimethylamine (62-75-9)			X	< 0.010	< 0.2						mg/l	mg/d			
42B. N-Nitrosodi-N-Propylamine (621-64-7)			X	< 0.010	< 0.2						mg/l	g/d			

CONTINUE ON REVERSE

CONTINUED FROM THE FRONT

1. POLLUTANT AND CAS NUMBER (if available)	2. MARK "X" a. Present in effluent	b. Present in intake	c. Absent	3. EFFLUENT a. MAXIMUM DAILY VALUE (1) Concentration	(2) Mass	b. MAXIMUM 30 DAY VALUE (if available) (1) Concentration	(2) Mass	c. LONG TERM AVRG. VALUE (if available) (1) Concentration	(2) Mass	d. NO. OF ANALYSES	4. UNITS a. CONCENTRATION	b. MASS	5. INTAKE (optional) a. LONG TERM AVERAGE VALUE (1) Concentration	(2) Mass	b. NO. OF ANALYSES
GC/MS FRACTION — BASE/NEUTRAL COMPOUNDS (continued)															
38B. N-Nitrosodiphenylamine (86-30-6)			X	< 0.010	< 0.2						mg/l	mg/d			
48B. Phenanthrene (85-01-8)			X	< 0.010	< 0.2						mg/l	mg/d			
58B. Pyrene (129-00-0)			X	< 0.010	< 0.2						mg/l	mg/d			
68B. 1,2,4-Trichlorobenzene (120-82-1)			X	< 0.010	< 0.2						mg/l	mg/d			
GC/MS FRACTION — PESTICIDES															
1P. Aldrin (309-00-2)			X	< 0.06	< 1.0						ug/l	ug/d			
2P. α-BHC (319-84-6)			X	< 0.02	< 0.3						ug/l	ug/d			
3P. β-BHC (319-85-7)			X	< 0.1	< 1.6						ug/l	ug/d			
4P. γ-BHC (58-89-9)			X	< 0.03	< 0.5						ug/l	ug/d			
5P. δ-BHC (319-86-8)			X	< 0.12	< 2.0						ug/l	ug/d			
6P. Chlordane (57-74-9)			X	< 0.25	< 4.1						ug/l	ug/d			
7P. 4,4'-DDT (50-29-3)			X	< 0.06	< 1.0						ug/l	ug/d			
8P. 4,4'-DDE (72-55-9)			X	< 0.08	< 1.3						ug/l	ug/d			
9P. 4,4'-DDD (72-54-8)			X	< 0.08	< 1.3						ug/l	ug/d			
10P. Dieldrin (60-57-1)			X	< 0.08	< 1.3						ug/l	ug/d			
11P. α-Endosulfan (115-29-7)			X	< 0.05	< 0.8						ug/l	ug/d			
12P. β-Endosulfan (115-29-7)			X	< 0.08	< 1.3						ug/l	ug/d			
13P. Endosulfan Sulfate (1031-07-8)			X	< 0.09	< 1.5						ug/l	ug/d			
14P. Endrin (72-20-8)			X	< 0.06	< 1.0						ug/l	ug/d			
15P. Endrin Aldehyde (7421-93-4)			X	< 0.62	< 10.1						ug/l	ug/d			
16P. Heptachlor (76-44-8)			X	< 0.3	< 4.9						ug/l	mg/d			

CONTINUE ON PAGE V-9

CONTINUED FROM PAGE V-8

EPA I.D. NUMBER (copy from item 1 of Form 1)	OUTFALL NUMBER
NM0890010515	04A016

Form Approved.
OMB No. 2040-0055
Approval expires 7-31-88

1. POLLUTANT AND CAS NUMBER (if available)	2. MARK "X" a. Present in effluent	b. Present but not in effluent	c. Absent	3. EFFLUENT a. MAXIMUM DAILY VALUE (1) Concentration	(2) Mass	b. MAXIMUM 30 DAY VALUE (if available) (1) Concentration	(2) Mass	c. LONG TERM AVRG. VALUE (if available) (1) Concentration	(2) Mass	d. NO. OF ANALYSES	4. UNITS a. CONCENTRATION	b. MASS	5. INTAKE (optional) a. LONG TERM AVERAGE VALUE (1) Concentration	(2) Mass	b. NO. OF ANALYSES
GC/MS FRACTION — PESTICIDES (continued)															
17P. Heptachlor Epoxide (1024-57-3)			X	< 0.04	< 0.7						ug/l	ug/d			
18P. PCB-1242 (53469-21-9)			X	< 0.68	< 11.1						ug/l	ug/d			
19P. PCB-1254 (11097-69-1)			X	< 0.68	< 11.1						ug/l	ug/d			
20P. PCB-1221 (11104-28-2)			X	N.D.											
21P. PCB-1232 (11141-16-5)			X	N.D.											
22P. PCB-1248 (12672-29-6)			X	N.D.											
23P. PCB-1260 (11096-82-5)			X	< 0.68	< 11.1						ug/l	ug/d			
24P. PCB-1016 (12674-11-2)			X	N.D.											
25P. Toxaphene (8001-35-2)			X	< 2.5	< 40.7						ug/l	mg/d			

☆U.S. GOVERNMENT PRINTING OFFICE : 1986 0 - 491-131/40161

Please print or type in the unshaded areas only.

EPA I.D. NUMBER (copy from Item 1 of Form 1)
NM0890010515

Form Approved.
OMB No. 2040-0086
Approval expires 7-31-88

FORM 2C NPDES

EPA

U.S. ENVIRONMENTAL PROTECTION AGENCY
APPLICATION FOR PERMIT TO DISCHARGE WASTEWATER
EXISTING MANUFACTURING, COMMERCIAL, MINING AND SILVICULTURAL OPERATIONS
Consolidated Permits Program

I. OUTFALL LOCATION

For each outfall, list the latitude and longitude of its location to the nearest 15 seconds and the name of the receiving water.

A. OUTFALL NUMBER (list)	B. LATITUDE			C. LONGITUDE			D. RECEIVING WATER (name)
	1. DEG.	2. MIN.	3. SEC.	1. DEG.	2. MIN.	3. SEC.	
03A045	35	52	0	106	18	16	Tributary to Mortandad Canyon, an ephemeral tributary to Rio Grande

II. FLOWS, SOURCES OF POLLUTION, AND TREATMENT TECHNOLOGIES

A. Attach a line drawing showing the water flow through the facility. Indicate sources of intake water, operations contributing wastewater to the effluent, and treatment units labeled to correspond to the more detailed descriptions in Item B. Construct a water balance on the line drawing by showing average flows between intakes, operations, treatment units, and outfalls. If a water balance cannot be determined (e.g., *for certain mining activities*), provide a pictorial description of the nature and amount of any sources of water and any collection or treatment measures.

B. For each outfall, provide a description of: (1) All operations contributing wastewater to the effluent, including process wastewater, sanitary wastewater, cooling water, and storm water runoff; (2) The average flow contributed by each operation; and (3) The treatment received by the wastewater. Continue on additional sheets if necessary.

1. OUTFALL NO. (list)	2. OPERATION(S) CONTRIBUTING FLOW		3. TREATMENT		
	a. OPERATION (list)	b. AVERAGE FLOW (include units)	a. DESCRIPTION	b. LIST CODES FROM TABLE 2C-1	
03A045	48-1-OPN-4				
	Cooling tower blow down (floor sink)	12.5 GPM	None		
	Cup drains (2)	flow is nil	None		
	Equipment drains (9)	5 GPD	None		
	Floor drains (15)	flow is nil	None		
	Sink drain	5 GPD	None		
	Roof drains (26)	Storm water	None		

OFFICIAL USE ONLY (effluent guidelines sub-categories)

CONTINUED FROM THE FRONT

C. Except for storm runoff, leaks, or spills, are any of the discharges described in Items II-A or B intermittent or seasonal?

☒ YES (complete the following table) ☐ NO (go to Section III)

1. OUTFALL NUMBER (list)	2. OPERATION(s) CONTRIBUTING FLOW (list)	3. FREQUENCY		4. FLOW				
		a. DAYS PER WEEK (specify average)	b. MONTHS PER YEAR (specify average)	a. FLOW RATE (in mgd)		b. TOTAL VOLUME (specify with units)		c. DURATION (in days)
				1. LONG TERM AVERAGE	2. MAXIMUM DAILY	1. LONG TERM AVERAGE	2. MAXIMUM DAILY	
03A045	Cooling tower blowdown	5	12	0.0006	0.001	600 GPD	1000 GPD	360 day/yr

III. PRODUCTION

A. Does an effluent guideline limitation promulgated by EPA under Section 304 of the Clean Water Act apply to your facility?

☐ YES (complete Item III-B) ☒ NO (go to Section IV)

B. Are the limitations in the applicable effluent guideline expressed in terms of production (or other measure of operation)?

☐ YES (complete Item III-C) ☐ NO (go to Section IV)

C. If you answered "yes" to Item III-B, list the quantity which represents an actual measurement of your level of production, expressed in the terms and units used in the applicable effluent guideline, and indicate the affected outfalls.

1. AVERAGE DAILY PRODUCTION			2. AFFECTED OUTFALLS (list outfall numbers)
a. QUANTITY PER DAY	b. UNITS OF MEASURE	c. OPERATION, PRODUCT, MATERIAL, ETC. (specify)	

IV. IMPROVEMENTS

A. Are you now required by any Federal, State or local authority to meet any implementation schedule for the construction, upgrading or operation of wastewater treatment equipment or practices or any other environmental programs which may affect the discharges described in this application? This includes, but is not limited to, permit conditions, administrative or enforcement orders, enforcement compliance schedule letters, stipulations, court orders, and grant or loan conditions.

☐ YES (complete the following table) ☐ NO (go to Item IV-B)

1. IDENTIFICATION OF CONDITION, AGREEMENT, ETC.	2. AFFECTED OUTFALLS		3. BRIEF DESCRIPTION OF PROJECT	4. FINAL COMPLIANCE DATE	
	a. NO.	b. SOURCE OF DISCHARGE		a. REQUIRED	b. PROPOSED
EPA Docket No. VI-92-1306		All	Complete Waste Stream Characterization surveys and Implement corrective actions.	7/01/93	FY94

B. OPTIONAL: You may attach additional sheets describing any additional water pollution control programs (or other environmental projects which may affect your discharges) you now have underway or which you plan. Indicate whether each program is now underway or planned, and indicate your actual or planned schedules for construction. ☐ MARK "X" IF DESCRIPTION OF ADDITIONAL CONTROL PROGRAMS IS ATTACHED

 CONTINUE ON PAGE 3

CONTINUED FROM PAGE 2

EPA I.D. NUMBER (copy from Item 1 of Form 1)
NM0890010515

Form Approved.
OMB No. 2040-0086
Approval expires 7-31-88

V. INTAKE AND EFFLUENT CHARACTERISTICS

A, B, & C: See instructions before proceeding – Complete one set of tables for each outfall – Annotate the outfall number in the space provided. NOTE: Tables V-A, V-B, and V-C are included on separate sheets numbered V-1 through V-9.

D. Use the space below to list any of the pollutants listed in Table 2c-3 of the instructions, which you know or have reason to believe is discharged or may be discharged from any outfall. For every pollutant you list, briefly describe the reasons you believe it to be present and report any analytical data in your possession.

1. POLLUTANT	2. SOURCE	1. POLLUTANT	2. SOURCE
see datasheet			

VI. POTENTIAL DISCHARGES NOT COVERED BY ANALYSIS

Is any pollutant listed in Item V-C a substance or a component of a substance which you currently use or manufacture as an intermediate or final product or byproduct?

☐ Yes (list all such pollutants below) ☒ No (go to Item VI-B)

CONTINUED FROM THE FRONT

VII. BIOLOGICAL TOXICITY TESTING DATA

Do you have any knowledge or reason to believe that any biological test for acute or chronic toxicity has been made on any of your discharges or on a receiving water in relation to your discharge within the last 3 years?

☐ YES *(identify the test(s) and describe their purposes below)* ☒ NO *(go to Section VIII)*

VIII. CONTRACT ANALYSIS INFORMATION

Were any of the analyses reported in Item V performed by a contract laboratory or consulting firm?

☐ YES *(list the name, address, and telephone number of, and pollutants analyzed by, each such laboratory or firm below)* ☐ NO *(go to Section IX)*

A. NAME	B. ADDRESS	C. TELEPHONE (area code & no.)	D. POLLUTANTS ANALYZED (list)

IX. CERTIFICATION

I certify under penalty of law that this document and all attachments were prepared under my direction or supervision in accordance with a system designed to assure that qualified personnel properly gather and evaluate the information submitted. Based on my inquiry of the person or persons who manage the system or those persons directly responsible for gathering the information, the information submitted is, to the best of my knowledge and belief, true, accurate, and complete. I am aware that there are significant penalties for submitting false information, including the possibility of fine and imprisonment for knowing violations.

A. NAME & OFFICIAL TITLE (type or print)	B. PHONE NO. (area code & no.)
JERRY L. BELLOWS, AREA MANAGER, DOE	505-667-5105
ALLEN J. TIEDMAN, ASSOC. DIRECTOR FOR OPERATIONS	505-667-9390
C. SIGNATURE	D. DATE SIGNED

Data from worst case composite.

PLEASE PRINT OR TYPE IN THE UNSHADED AREAS ONLY. You may report some or all of this information on separate sheets (use the same format) instead of completing these pages. SEE INSTRUCTIONS.

EPA I.D. NUMBER (copy from Item I of Form 1): NM0890010515

Form Approved. OMB No. 2040-0086. Approval expires 7-31-88

V. INTAKE AND EFFLUENT CHARACTERISTICS (continued from page 3 of Form 2-C)

OUTFALL NO. 03A045

PART A - You must provide the results of at least one analysis for every pollutant in this table. Complete one table for each outfall. See instructions for additional details.

1. POLLUTANT	2. EFFLUENT a. MAXIMUM DAILY VALUE (1) CONCENTRATION	(2) MASS	b. MAXIMUM 30 DAY VALUE (if available) (1) CONCENTRATION	(2) MASS	c. LONG TERM AVRG. VALUE (if available) (1) CONCENTRATION	(2) MASS	d. NO. OF ANALYSES	3. UNITS (specify if blank) a. CONCENTRATION	b. MASS	4. INTAKE (optional) a. LONG TERM AVERAGE VALUE (1) CONCENTRATION	(2) MASS	b. NO. OF ANALYSES
a. Biochemical Oxygen Demand (BOD)	2.0	7.6						mg/l	g/d			
b. Chemical Oxygen Demand (COD)	42.0	159.0						mg/l	g/d			
c. Total Organic Carbon (TOC)	7.4	28.0						mg/l	g/d			
d. Total Suspended Solids (TSS)	7.0	26.5						mg/l	g/d			
e. Ammonia (as N)	< .01	< 37.850						mg/l	mg/d			
f. Flow	VALUE 1000		VALUE		VALUE			gal/day		VALUE		
g. Temperature (winter)	VALUE 36.9 C		VALUE		VALUE			°C		VALUE		
h. Temperature (summer)	VALUE		VALUE		VALUE			°C		VALUE		
i. pH	MINIMUM 6.8	MAXIMUM 8.8	MINIMUM 6.0	MAXIMUM 9.0				STANDARD UNITS				

PART B - Mark "X" in column 2-a for each pollutant you know or have reason to believe is present. Mark "X" in column 2-b for each pollutant you believe to be absent. If you mark column 2a for any pollutant which is limited either directly, or indirectly but expressly, in an effluent limitations guideline, you must provide the results of at least one analysis for that pollutant. For other pollutants for which you mark column 2a, you must provide quantitative data or an explanation of their presence in your discharge. Complete one table for each outfall. See the instructions for additional details and requirements.

1. POLLUTANT AND CAS NO. (if available)	2. MARK "X" a. PRESENT	b. ABSENT	3. EFFLUENT a. MAXIMUM DAILY VALUE (1) CONCENTRATION	(2) MASS	b. MAXIMUM 30 DAY VALUE (if available) (1) CONCENTRATION	(2) MASS	c. LONG TERM AVRG. VALUE (if available) (1) CONCENTRATION	(2) MASS	d. NO. OF ANALYSES	4. UNITS a. CONCENTRATION	b. MASS	5. INTAKE (optional) a. LONG TERM AVERAGE VALUE (1) CONCENTRATION	(2) MASS	b. NO. OF ANALYSES
a. Bromide (24959-67-9)	X		3.24	12.3						mg/l	g/d			
b. Chlorine, Total Residual		X	0.0	0.0						mg/l	mg/d			
c. Color	X		10							units				
d. Fecal Coliform		X												
e. Fluoride (16984-48-8)	X		0.52	2.0						mg/l	g/d			
f. Nitrate-Nitrite (as N)	X		1.13	4.3						mg/l	g/d			

CONTINUE ON REVERSE

ITEM V-B CONTINUED FROM FRONT

1. POLLUTANT AND CAS NO. (if available)	2. MARK "X" a. BELIEVED PRESENT	b. BELIEVED ABSENT	3. EFFLUENT a. MAXIMUM DAILY VALUE (1) CONCENTRATION	(2) MASS	b. MAXIMUM 30 DAY VALUE (if available) (1) CONCENTRATION	(2) MASS	c. LONG TERM AVRG. VALUE (if available) (1) CONCENTRATION	(2) MASS	d. NO. OF ANALYSES	4. UNITS a. CONCENTRATION	b. MASS	5. INTAKE (optional) a. LONG TERM AVERAGE VALUE (1) CONCENTRATION	(2) MASS	b. NO. OF ANALYSES
g. Nitrogen, Total Organic (as N)	X		2.3	8.7						mg/l	g/d			
h. Oil and Grease		X	< 1.2	< 4.5						mg/l	g/d			
i. Phosphorus (as P), Total (7723-14-0)	X		.306	1.2						mg/l	g/d			
j. Radioactivity														
(1) Alpha, Total	X		14	53.0						pCi/l	nCi/d			
(2) Beta, Total	X		6.6	25.0						pCi/l	nCi/d			
(3) Radium, Total	X													
(4) Radium 226, Total	X		0.07	0.3						pCi/l	nCi/d			
k. Sulfate (as SO_4) (14808-79-8)	X		143	541.3						mg/l	g/d			
l. Sulfide (as S)	X		70.2	265.7						mg/l	g/d			
m. Sulfite (as SO_3) (14265-45-3)	X		18.8	71.2						mg/l	g/d			
n. Surfactants	X		0.11	0.4						mg/l	g/d			
o. Aluminum, Total (7429-90-5)	X		0.06	0.2						mg/l	g/d			
p. Barium, Total (7440-39-3)	X		0.11	0.4						mg/l	g/d			
q. Boron, Total (7440-42-8)	X		0.33	1.2						mg/l	g/d			
r. Cobalt, Total (7440-48-4)		X	0.07	0.3						mg/l	g/d			
s. Iron, Total (7439-89-6)	X		1.1	4.2						mg/l	g/d			
t. Magnesium, Total (7439-95-4)	X		5.8	22.0						mg/l	g/d			
u. Molybdenum, Total (7439-98-7)	X		1.7	6.4						mg/l	g/d			
v. Manganese, Total (7439-96-5)	X		0.05	0.2						mg/l	g/d			
w. Tin, Total (7440-31-5)		X	< 0.050	< 0.2						mg/l	g/d			
x. Titanium, Total (7440-32-6)		X	< 0.004	< 15.1						mg/l	mg/d			

CONTINUE ON PAGE V-3

EPA I.D. NUMBER (copy from Item 1 of Form 1)	OUTFALL NUMBER
NM0890010515	03A045

Form Approved.
OMB No. 2040-0086
Approval expires 7-31-88

CONTINUED FROM PAGE 3 OF FORM 2-C

PART C - If you are a primary industry and this outfall contains process wastewater, refer to Table 2c-2 in the instructions to determine which of the GC/MS fractions you must test for. Mark "X" in column 2-a for all such GC/MS fractions that apply to your industry and for ALL toxic metals, cyanides, and total phenols. If you are not required to mark column 2-a *(secondary industries, nonprocess wastewater outfalls, and non required GC/MS fractions)*, mark "X" in column 2-b for each pollutant you know or have reason to believe is present. Mark "X" in column 2-c for each pollutant you believe is absent. If you mark column 2a for any pollutant, you must provide the results of at least one analysis for that pollutant. If you mark column 2b for any pollutant, you must provide the results of at least one analysis for that pollutant if you know or have reason to believe it will be discharged in concentrations of 10 ppb or greater. If you mark column 2b for acrolein, acrylonitrile, 2,4 dinitrophenol, or 2-methyl-4, 6 dinitrophenol, you must provide the results of at least one analysis for each of these pollutants which you know or have reason to believe that you discharge in concentrations of 100 ppb or greater. Otherwise, for pollutants for which you mark column 2b, you must either submit at least one analysis or briefly describe the reasons the pollutant is expected to be discharged. Note that there are 7 pages to this part; please review each carefully. Complete one table *(all 7 pages)* for each outfall. See instructions for additional details and requirements.

1. POLLUTANT AND CAS NUMBER (if available)	2. MARK "X"			3. EFFLUENT							4. UNITS		5. INTAKE (optional)		
	a. Testing Required	b. Believed Present	c. Believed Absent	a. MAXIMUM DAILY VALUE		b. MAXIMUM 30 DAY VALUE (if available)		c. LONG TERM AVRG. VALUE (if available)		d. NO. OF ANALYSES	a. CONCENTRATION	b. MASS	a. LONG TERM AVERAGE VALUE		b. NO. OF ANALYSES
				(1) CONCENTRATION	(2) MASS	(1) CONCENTRATION	(2) MASS	(1) CONCENTRATION	(2) MASS				(1) CONCENTRATION	(2) MASS	
METALS, CYANIDE, AND TOTAL PHENOLS															
1M. Antimony, Total (7440-36-0)			X	< 0.050	< 0.2						mg/l	g/d			
2M. Arsenic, Total (7440-38-2)		X		0.04	0.2						mg/l	g/d			
3M. Beryllium, Total, 7440-41-7)			X	< 0.1	< 0.4						mg/l	g/d			
4M. Cadmium, Total (7440-43-9)		X		.004	15.1						mg/l	mg/d			
5M. Chromium, Total (7440-47-3)		X		.260	1.0						mg/l	g/d			
6M. Copper, Total (7440-50-8)		X		0.1	0.4						mg/l	g/d			
7M. Lead, Total (7439-92-1)		X		.050	0.2						mg/l	g/d			
8M. Mercury, Total (7439-97-6)			X	< .0002	< 0.8						mg/l	mg/d			
9M. Nickel, Total (7440-02-0)		X		.28	1.1						mg/l	g/d			
10M. Selenium, Total (7782-49-2)			X	< .001	< 3.8						mg/l	mg/d			
11M. Silver, Total (7440-22-4)			X	< 0.01	< 37.9						mg/l	mg/d			
12M. Thallium, Total (7440-28-0)		X		0.51	1.9						mg/l	g/d			
13M. Zinc, Total (7440-66-6)		X		.071	0.3						mg/l	g/d			
14M. Cyanide, Total (57-12-5)		X		.033	0.1						mg/l	g/d			
15M. Phenols, Total			X	< .01	< 37.9						mg/l	mg/d			
DIOXIN															
2,3,7,8-Tetrachlorodibenzo-P-Dioxin (1746-01-6)			X	DESCRIBE RESULTS											

CONTINUE ON REVERSE

1. POLLUTANT AND CAS NUMBER (if available)	2. MARK "X" a. Testing Required	b. Believed Present	c. Believed Absent	3. EFFLUENT a. MAXIMUM DAILY VALUE (1) Concentration	(2) Mass	b. MAXIMUM 30 DAY VALUE (if available) (1) Concentration	(2) Mass	c. LONG TERM AVRG. VALUE (if available) (1) Concentration	(2) Mass	d. NO. OF ANALYSES	4. UNITS a. Concentration	b. Mass	5. INTAKE (optional) a. LONG TERM AVERAGE VALUE (1) Concentration	(2) Mass	b. NO. OF ANALYSES
GC/MS FRACTION – VOLATILE COMPOUNDS															
1V. Acrolein (107-02-8)			X												
2V. Acrylonitrile (107-13-1)			X												
3V. Benzene (71-43-2)			X	< 0.005	< 18.9						mg/l	mg/d			
4V. Bis (Chloromethyl) Ether (542-88-1)			X												
5V. Bromoform (75-25-2)			X	< 0.005	< 18.9						mg/l	mg/d			
6V. Carbon Tetrachloride (56-23-5)			X	< 0.005	< 18.9						mg/l	mg/d			
7V. Chlorobenzene (108-90-7)			X	< 0.005	< 18.9						mg/l	mg/d			
8V. Chlorodibromomethane (124-48-1)			X	< 0.005	< 18.9						mg/l	mg/d			
9V. Chloroethane (75-00-3)			X	< 0.010	< 0.0						mg/l	mg/d			
10V. 2-Chloroethylvinyl Ether (110-75-8)			X												
11V. Chloroform (67-66-3)			X	< 0.005	< 18.9						mg/l	mg/d			
12V. Dichlorobromomethane (75-27-4)			X	< 0.005	< 16.9						mg/l	mg/d			
13V. Dichlorodifluoromethane (75-71-8)			X												
14V. 1,1-Dichloroethane (75-34-3)			X	< 0.005	< 18.9						mg/l	mg/d			
15V. 1,2 Dichloroethane (107-06-2)			X	< 0.005	< 18.9						mg/l	mg/d			
16V. 1,1-Dichloroethylene (75-35-4)			X	< 0.005	< 16.9						mg/l	mg/d			
17V. 1,2-Dichloropropane (78-87-5)			X	< 0.005	< 18.9						mg/l	kg/d			
18V. 1,3-Dichloropropylene (542-75-6)			X	< 0.005	< 18.9						mg/l	mg/d			
19V. Ethylbenzene (100-41-4)			X	< 0.005	< 18.9						mg/l	mg/d			
20V. Methyl Bromide (74-83-9)			X	< 0.010	< 37.9						mg/l	mg/d			
21V. Methyl Chloride (74-87-3)			X	< 0.010	< 37.9						mg/l	mg/d			

CONTINUE ON PAGE V-5

CONTINUED FROM PAGE V-4

NPDES NUMBER (copy from item 1 of Form 1): NM0890010515 | OUTFALL NUMBER: 03A045

OMB No. 2040-0086
Approval expires 7-31-88

1. POLLUTANT AND CAS NUMBER (if available)	2. MARK "X" a. Test and believe present	b. Believe present	c. Believe absent	3. EFFLUENT a. MAXIMUM DAILY VALUE (1) Concentration	(2) Mass	b. MAXIMUM 30 DAY VALUE (if available) (1) Concentration	(2) Mass	c. LONG TERM AVRG. VALUE (if available) (1) Concentration	(2) Mass	d. NO. OF ANALYSES	4. UNITS a. CONCENTRATION	b. MASS	5. INTAKE (optional) a. LONG TERM AVERAGE VALUE (1) Concentration	(2) Mass	b. NO. OF ANALYSES
GC/MS FRACTION — VOLATILE COMPOUNDS (continued)															
22V. Methylene Chloride (75-09-2)			X	< 0.005	< 18.9						mg/l	mg/d			
23V. 1,1,2,2-Tetrachloroethane (79-34-5)			X	< 0.005	< 18.9						mg/l	mg/d			
24V. Tetrachloroethylene (127-18-4)			X	< 0.005	< 18.9						mg/l	mg/d			
25V. Toluene (108-88-3)			X	< 0.005	< 18.9						mg/l	mg/d			
26V. 1,2-Trans-Dichloroethylene (156-60-5)			X	< 0.005	< 18.9						mg/l	mg/d			
27V. 1,1,1-Trichloroethane (71-55-6)			X	< 0.005	< 18.9						mg/l	mg/d			
28V. 1,1,2-Trichloroethane (79-00-5)			X	< 0.005	< 18.9						mg/l	mg/d			
29V. Trichloroethylene (79-01-6)			X	< 0.005	< 18.9						mg/l	mg/d			
30V. Trichlorofluoromethane (75-69-4)			X	< 0.005	< 18.9						mg/l	mg/d			
31V. Vinyl Chloride (75-01-4)			X	< 0.010	< 37.9						mg/l	mg/d			
GC/MS FRACTION — ACID COMPOUNDS															
1A. 2-Chlorophenol (95-57-8)			X	< 0.010	< 37.9						mg/l	mg/d			
2A. 2,4-Dichlorophenol (120-83-2)			X	< 0.010	< 37.9						mg/l	mg/d			
3A. 2,4-Dimethylphenol (105-67-9)			X	< 0.010	< 37.9						mg/l	mg/d			
4A. 4,6-Dinitro-O-Cresol (534-52-1)			X	< 0.010	< 37.9						mg/l	mg/d			
5A. 2,4-Dinitrophenol (51-28-5)			X	< 0.010	< 37.9						mg/l	mg/d			
6A. 2-Nitrophenol (88-75-5)			X	< 0.010	< 37.9						mg/l	mg/d			
7A. 4-Nitrophenol (100-02-7)			X	< 0.010	< 37.9						mg/l	mg/d			
8A. P-Chloro-M-Cresol (59-50-7)			X	< 0.010	< 37.9						mg/l	mg/d			
9A. Pentachlorophenol (87-86-5)			X	< 0.010	< 37.9						mg/l	mg/d			
10A. Phenol (108-95-2)			X	< 0.010	< 37.9						mg/l	mg/d			
11A. 2,4,6-Trichlorophenol (88-06-2)			X	< 0.010	< 37.9						mg/l	mg/d			

CONTINUE ON REVERSE

CONTINUED FROM THE FRONT

1. POLLUTANT AND CAS NUMBER (if available)	2. MARK "X" a. Believed Absent	b. Believed Present	c. Analyzed and Present	3. EFFLUENT a. MAXIMUM DAILY VALUE (1) Concentration	(2) Mass	b. MAXIMUM 30 DAY VALUE (if available) (1) Concentration	(2) Mass	c. LONG TERM AVRG. VALUE (if available) (1) Concentration	(2) Mass	d. NO. OF ANALYSES	4. UNITS a. CONCENTRATION	b. MASS	5. INTAKE (optional) a. LONG TERM AVERAGE VALUE (1) Concentration	(2) Mass	b. NO. OF ANALYSES
GC/MS FRACTION — BASE/NEUTRAL COMPOUNDS															
1B. Acenaphthene (83-32-9)			X	< 0.010	< 37.9						mg/l	mg/d			
2B. Acenaphtylene (208 96-8)			X	< 0.010	< 37.9						mg/l	mg/d			
3B. Anthracene (120-12-7)			X	< 0.010	< 37.9						mg/l	mg/d			
4B. Benzidine (92-87-5)			X	< 0.010	< 37.9						mg/l	mg/d			
5B. Benzo (a) Anthracene (56-55-3)			X	< 0.010	< 37.9						mg/l	mg/d			
6B. Benzo (a) Pyrene (50-32-8)			X	< 0.010	< 37.9						mg/l	mg/d			
7B. 3,4-Benzo-fluoranthene (205-99-2)			X	< 0.010	< 37.9						mg/l	mg/d			
8B. Benzo (ghi) Perylene (191-24-2)			X	< 0.010	< 37.9						mg/l	mg/d			
9B. Benzo (k) Fluoranthene (207-08-9)			X	< 0.010	< 37.9						mg/l	mg/d			
10B. Bis (2-Chloro-ethoxy) Methane (111-91-1)			X	< 0.010	< 37.9						mg/l	mg/d			
11B. Bis (2-Chloro-ethyl) Ether (111-44-4)			X	< 0.010	< 37.9						mg/l	mg/d			
12B. Bis (2-Chloro-propyl) Ether (102-60-1)			X	< 0.010	< 37.9						mg/l	mg/d			
13B. Bis (2-Ethyl-hexyl) Phthalate (117-81-7)			X	< 0.010	< 37.9						mg/l	mg/d			
14B. 4-Bromo-phenyl Phenyl Ether (101-55-3)			X	< 0.010	< 37.9						mg/l	mg/d			
15B. Butyl Benzyl Phthalate (85-68-7)			X	< 0.010	< 37.9						mg/l	mg/d			
16B. 2-Chloro-naphthalene (91-58-7)			X	< 0.010	< 37.9						mg/l	mg/d			
17B. 4-Chloro-phenyl Phenyl Ether (7005-72-3)			X	< 0.010	< 37.9						mg/l	mg/d			
18B. Chrysene (218-01-9)			X	< 0.010	< 37.9						mg/l	mg/d			
19B. Dibenzo (a,h) Anthracene (53-70-3)			X	< 0.010	< 37.9						mg/l	mg/d			
20B. 1,2-Dichloro-benzene (95-50-1)			X	< 0.010	< 37.9						mg/l	mg/d			
21B. 1,3-Dichloro-benzene (541-73-1)			X	< 0.010	< 37.9						mg/l	mg/d			

CONTINUE ON PAGE V-7

CONTINUED FROM PAGE V-6

EPA I.D. NUMBER (copy from Item 1 of Form 1)	OUTFALL NUMBER
NM0890010515	03A045

Form Approved.
OMB No. 2040-0086
Approval expires 7-31-88

1. POLLUTANT AND CAS NUMBER (if available)	2. MARK "X" a. Testing required	b. Believed present	c. Believed absent	3. EFFLUENT a. MAXIMUM DAILY VALUE (1) Concentration	(2) Mass	b. MAXIMUM 30 DAY VALUE (if available) (1) Concentration	(2) Mass	c. LONG TERM AVRG. VALUE (if available) (1) Concentration	(2) Mass	d. NO. OF ANALYSES	4. UNITS a. CONCENTRATION	b. MASS	5. INTAKE (optional) a. LONG TERM AVERAGE VALUE (1) Concentration	(2) Mass	b. NO. OF ANALYSES
GC/MS FRACTION – BASE/NEUTRAL COMPOUNDS (continued)															
22B. 1,4-Dichlorobenzene (106-46-7)			X	< 0.010	< 37.9						mg/l	mg/d			
23B. 3,3'-Dichlorobenzidine (91-94-1)			X	< 0.010	< 37.9						mg/l	mg/d			
24B. Diethyl Phthalate (84-66-2)			X	< 0.010	< 37.9						mg/l	mg/d			
25B. Dimethyl Phthalate (131-11-3)			X	< 0.010	< 37.9						mg/l	mg/d			
26B. Di-n-Butyl Phthalate (84-74-2)			X	< 0.010	< 37.9						mg/l	mg/d			
27B. 2,4-Dinitrotoluene (121-14-2)			X	< 0.010	< 37.9						mg/l	mg/d			
28B. 2,6-Dinitrotoluene (606-20-2)			X	< 0.010	< 37.9						mg/l	mg/d			
29B. Di-n-Octyl Phthalate (117-84-0)			X	< 0.010	< 37.9						mg/l	mg/d			
30B. 1,2-Diphenylhydrazine (as Azobenzene) (122-66-7)			X	< 0.010	< 37.9						mg/l	mg/d			
31B. Fluoranthene (206-44-0)			X	< 0.010	< 37.9						mg/l	mg/d			
32B. Fluorene (86-73-7)			X	< 0.010	< 37.9						mg/l	mg/d			
33B. Hexachlorobenzene (118-74-1)			X	< 0.010	< 37.9						mg/l	mg/d			
34B. Hexachlorobutadiene (87-68-3)			X	< 0.010	< 37.9						mg/l	mg/d			
35B. Hexachlorocyclopentadiene (77-47-4)			X	< 0.010	< 37.9						mg/l	mg/d			
36B. Hexachloroethane (67-72-1)			X	< 0.010	< 37.9						mg/l	mg/d			
37B. Indeno (1,2,3-cd) Pyrene (193-39-5)			X	< 0.010	< 37.9						mg/l	mg/d			
38B. Isophorone (78-59-1)			X	< 0.010	< 37.9						mg/l	mg/d			
39B. Naphthalene (91-20-3)			X	< 0.010	< 37.9						mg/l	mg/d			
40B. Nitrobenzene (98-95-3)			X	< 0.010	< 37.9						mg/l	mg/d			
41B. N-Nitrosodimethylamine (62-75-9)			X	< 0.010	< 37.9						mg/l	mg/d			
42B. N-Nitrosodi-N-Propylamine (621-64-7)			X	< 0.010	< 37.9						mg/l	mg/d			

CONTINUE ON REVERSE

CONTINUED FROM THE FRONT

1. POLLUTANT AND CAS NUMBER (if available)	2. MARK "X" a. Present in effluent	b. Present in intake	c. Absent	3. EFFLUENT a. MAXIMUM DAILY VALUE (1) concentration	(2) mass	b. MAXIMUM 30 DAY VALUE (if available) (1) concentration	(2) mass	c. LONG TERM AVRG. VALUE (if available) (1) concentration	(2) mass	d. NO. OF ANALYSES	4. UNITS a. CONCENTRATION	b. MASS	5. INTAKE (optional) a. LONG TERM AVERAGE VALUE (1) concentration	(2) mass	b. NO. OF ANALYSES
GC/MS FRACTION — BASE/NEUTRAL COMPOUNDS (continued)															
43B. N-Nitrosodiphenylamine (86-30-6)			X	< 0.010	< 37.9						mg/l	mg/d			
44B. Phenanthrene (85-01-8)			X	< 0.010	< 37.9						mg/l	mg/d			
45B. Pyrene (129-00-0)			X	< 0.010	< 37.9						mg/l	mg/d			
46B. 1,2,4-Trichlorobenzene (120-82-1)			X	< 0.010	< 37.9						mg/l	mg/d			
GC/MS FRACTION — PESTICIDES															
1P. Aldrin (309-00-2)			X	< 0.06	< 0.2						ug/l	mg/d			
2P. α-BHC (319-84-6)			X	< 0.04	< 0.2						ug/l	mg/d			
3P. β-BHC (319-85-7)			X	< 0.1	< 0.4						ug/l	mg/d			
4P. γ-BHC (58-89-9)			X	< 0.03	< 0.1						ug/l	mg/d			
5P. δ-BHC (319-86-8)			X	< 0.12	< 0.5						ug/l	mg/d			
6P. Chlordane (57-74-9)			X	< 0.25	< 0.9						ug/l	mg/d			
7P. 4,4'-DDT (50-29-3)			X	< 0.06	< 0.2						ug/l	mg/d			
8P. 4,4'-DDE (72-55-9)			X	< 0.08	< 0.3						ug/l	mg/d			
9P. 4,4'-DDD (72-54-8)			X	< 0.08	< 0.3						ug/l	mg/d			
10P. Dieldrin (60-57-1)			X	< 0.08	< 0.3						ug/l	mg/d			
11P. α-Endosulfan (115-29-7)			X	< 0.05	< 0.2						ug/l	mg/d			
12P. β-Endosulfan (115-29-7)			X	< 0.08	< 0.3						ug/l	mg/d			
13P. Endosulfan sulfate (1031-07-8)			X	< 0.09	< 0.3						ug/l	mg/d			
14P. Endrin (72-20-8)			X	< 0.06	< 0.2						ug/l	mg/d			
15P. Endrin aldehyde (7421-93-4)			X	< 0.62	< 2.3						ug/l	mg/d			
16P. Heptachlor (76-44-8)			X	< 0.03	< 0.1						ug/l	mg/d			

CONTINUE ON PAGE V-9

CONTINUED FROM PAGE V-8

EPA I.D. NUMBER (copy from Item 1 of Form 1)	OUTFALL NUMBER
NM0890010515	03A045

Form Approved.
OMB No. 2040-0086
Approval expires 7-31-88

1. POLLUTANT AND CAS NUMBER (if available)	2. MARK "X" a. TEST AND REQUIRED	b. REQUIRED PRESENT	c. BELIEVED ABSENT	3. EFFLUENT a. MAXIMUM DAILY VALUE (1) CONCENTRATION	(2) MASS	b. MAXIMUM 30 DAY VALUE (if available) (1) CONCENTRATION	(2) MASS	c. LONG TERM AVRG. VALUE (if available) (1) CONCENTRATION	(2) MASS	d. NO. OF ANALYSES	4. UNITS a. CONCENTRATION	b. MASS	5. INTAKE (optional) a. LONG TERM AVERAGE VALUE (1) CONCENTRATION	(2) MASS	b. NO. OF ANALYSES
GC/MS FRACTION — PESTICIDES (continued)															
17P. Heptachlor Epoxide (1024-57-3)			X	< 0.08	< 0.3						ug/l	mg/d			
18P. PCB-1242 (53469-21-9)			X	< 0.71	< 2.7						ug/l	mg/d			
19P. PCB-1254 (11097-69-1)			X	< 0.71	< 2.7						ug/l	mg/d			
20P. PCB-1221 (11104-28-2)			X	N.D.											
21P. PCB-1232 (11141-16-5)			X	N.D.											
22P. PCB-1248 (12672-29-6)			X	N.D.											
23P. PCB-1260 (11096-82-5)			X	< 0.71	< 2.7						ug/l	mg/d			
24P. PCB-1016 (12674-11-2)			X	N.D.											
25P. Toxaphene (8001-35-2)			X	< 2.5	< 9.5						ug/l	mg/d			

NSN 7540-00-180-7732 PRINTED ON RECYCLED PAPER
☆ U.S. GOVERNMENT PRINTING OFFICE : 1986 O — 491-101 (40101)

Please print or type in the unshaded areas only.

EPA I.D. NUMBER (copy from Item 1 of Form 1)
NM0890010515

Form Approved.
OMB No. 2040-0086
Approval expires 7-31-88

FORM 2C NPDES

EPA

U.S. ENVIRONMENTAL PROTECTION AGENCY
APPLICATION FOR PERMIT TO DISCHARGE WASTEWATER
EXISTING MANUFACTURING, COMMERCIAL, MINING AND SILVICULTURAL OPERATIONS
Consolidated Permits Program

I. OUTFALL LOCATION

For each outfall, list the latitude and longitude of its location to the nearest 15 seconds and the name of the receiving water.

A. OUTFALL NUMBER (list)	B. LATITUDE			C. LONGITUDE			D. RECEIVING WATER (name)
	1. DEG.	2. MIN.	3. SEC.	1. DEG.	2. MIN.	3. SEC.	
04A153	35	51	58	106	18	21	Tributary to Mortandad Canyon, an ephemeral tributary to Rio Grande

II. FLOWS, SOURCES OF POLLUTION, AND TREATMENT TECHNOLOGIES

A. Attach a line drawing showing the water flow through the facility. Indicate sources of intake water, operations contributing wastewater to the effluent, and treatment units labeled to correspond to the more detailed descriptions in Item B. Construct a water balance on the line drawing by showing average flows between intakes, operations, treatment units, and outfalls. If a water balance cannot be determined (*e.g., for certain mining activities*), provide a pictorial description of the nature and amount of any sources of water and any collection or treatment measures.

B. For each outfall, provide a description of: (1) All operations contributing wastewater to the effluent, including process wastewater, sanitary wastewater, cooling water, and storm water runoff; (2) The average flow contributed by each operation; and (3) The treatment received by the wastewater. Continue on additional sheets if necessary.

1. OUTFALL NO. (list)	2. OPERATION(S) CONTRIBUTING FLOW		3. TREATMENT		
	a. OPERATION (list)	b. AVERAGE FLOW (include units)	a. DESCRIPTION	b. LIST CODES FROM TABLE 2C-1	
04A153	48-1-OPN-7				
	Roof drains (5)	storm water	None		
	Floor drains (4)	flow is nil	None		
	Equipment drains (10)	5 GPD	None		

OFFICIAL USE ONLY (effluent guidelines sub-categories)

CONTINUED FROM THE FRONT

C. Except for storm runoff, leaks, or spills, are any of the discharges described in Items II-A or B intermittent or seasonal?

☒ YES (complete the following table) ☐ NO (go to Section III)

1. OUTFALL NUMBER (list)	2. OPERATION(s) CONTRIBUTING FLOW (list)	3. FREQUENCY a. DAYS PER WEEK (specify average)	3. FREQUENCY b. MONTHS PER YEAR (specify average)	4. FLOW a. FLOW RATE (in mgd) i. LONG TERM AVERAGE	4. FLOW a. FLOW RATE (in mgd) ii. MAXIMUM DAILY	4. FLOW b. TOTAL VOLUME (specify with units) i. LONG TERM AVERAGE	4. FLOW b. TOTAL VOLUME (specify with units) ii. MAXIMUM DAILY	4. FLOW c. DURATION (in days)
04A153	Equipment drains	5	12	0.000005	0.00001	5 GPD	10 GPD	260 day/yr

III. PRODUCTION

A. Does an effluent guideline limitation promulgated by EPA under Section 304 of the Clean Water Act apply to your facility?

☐ YES (complete Item III-B) ☒ NO (go to Section IV)

B. Are the limitations in the applicable effluent guideline expressed in terms of production (or other measure of operation)?

☐ YES (complete Item III-C) ☐ NO (go to Section IV)

C. If you answered "yes" to Item III-B, list the quantity which represents an actual measurement of your level of production, expressed in the terms and units used in the applicable effluent guideline, and indicate the affected outfalls.

1. AVERAGE DAILY PRODUCTION a. QUANTITY PER DAY	b. UNITS OF MEASURE	c. OPERATION, PRODUCT, MATERIAL, ETC. (specify)	2. AFFECTED OUTFALLS (list outfall numbers)

IV. IMPROVEMENTS

A. Are you now required by any Federal, State or local authority to meet any implementation schedule for the construction, upgrading or operation of wastewater treatment equipment or practices or any other environmental programs which may affect the discharges described in this application? This includes, but is not limited to, permit conditions, administrative or enforcement orders, enforcement compliance schedule letters, stipulations, court orders, and grant or loan conditions.

☐ YES (complete the following table) ☐ NO (go to Item IV-B)

1. IDENTIFICATION OF CONDITION, AGREEMENT, ETC.	2. AFFECTED OUTFALLS a. NO.	2. AFFECTED OUTFALLS b. SOURCE OF DISCHARGE	3. BRIEF DESCRIPTION OF PROJECT	4. FINAL COMPLIANCE DATE a. REQUIRED	4. FINAL COMPLIANCE DATE b. PROJECTED
EPA Docket No. VI-92-1306		All	Complete Waste Stream Characterization surveys and implement corrective actions.	1/1/93	FYM

B. OPTIONAL: You may attach additional sheets describing any additional water pollution control programs (or other environmental projects which may affect your discharges) you now have underway or which you plan. Indicate whether each program is now underway or planned, and indicate your actual or planned schedules for construction. ☐ MARK "X" IF DESCRIPTION OF ADDITIONAL CONTROL PROGRAMS IS ATTACHED

CONTINUE ON PAGE 3

CONTINUED FROM PAGE 2

EPA I.D. NUMBER (copy from Item 1 of Form 1)
NM0890010515

Form Approved.
OMB No. 2040-0086
Approval expires 7-31-88

V. INTAKE AND EFFLUENT CHARACTERISTICS

A, B, & C: See instructions before proceeding — Complete one set of tables for each outfall — Annotate the outfall number in the space provided. NOTE: Tables V-A, V-B, and V-C are included on separate sheets numbered V-1 through V-9.

D. Use the space below to list any of the pollutants listed in Table 2c-3 of the instructions, which you know or have reason to believe is discharged or may be discharged from any outfall. For every pollutant you list, briefly describe the reasons you believe it to be present and report any analytical data in your possession.

1. POLLUTANT	2. SOURCE	1. POLLUTANT	2. SOURCE
see datasheet			

VI. POTENTIAL DISCHARGES NOT COVERED BY ANALYSIS

Is any pollutant listed in Item V-C a substance or a component of a substance which you currently use or manufacture as an intermediate or final product or byproduct?

☐ YES (list all such pollutants below) ☒ NO (go to Item VI-B)

CONTINUE ON REVERSE

126

CONTINUED FROM THE FRONT

VII. BIOLOGICAL TOXICITY TESTING DATA

Do you have any knowledge or reason to believe that any biological test for acute or chronic toxicity has been made on any of your discharges or on a receiving water in relation to your discharge within the last 3 years?

☐ YES *(identify the test(s) and describe their purposes below)* ☒ NO *(go to Section VIII)*

VIII. CONTRACT ANALYSIS INFORMATION

Were any of the analyses reported in Item V performed by a contract laboratory or consulting firm?

☐ YES *(list the name, address, and telephone number of, and pollutants analyzed by, each such laboratory or firm below)* ☐ NO *(go to Section IX)*

A. NAME	B. ADDRESS	C. TELEPHONE (area code & no.)	D. POLLUTANTS ANALYZED (list)

IX. CERTIFICATION

I certify under penalty of law that this document and all attachments were prepared under my direction or supervision in accordance with a system designed to assure that qualified personnel properly gather and evaluate the information submitted. Based on my inquiry of the person or persons who manage the system or those persons directly responsible for gathering the information, the information submitted is, to the best of my knowledge and belief, true, accurate, and complete. I am aware that there are significant penalties for submitting false information, including the possibility of fine and imprisonment for knowing violations.

A. NAME & OFFICIAL TITLE *(type or print)*	B. PHONE NO. *(area code & no.)*
JERRY L. BELLOWS, AREA MANAGER, DOE	505-667-5105
ALLEN J. TIEDMAN, ASSOC. DIRECTOR FOR OPERATIONS	505-667-9390
C. SIGNATURE	D. DATE SIGNED

Data from worst case composite.

PLEASE PRINT OR TYPE IN THE UNSHADED AREAS ONLY. You may report some or all of this information on separate sheets (use the same format) instead of completing these pages. SEE INSTRUCTIONS.

EPA I.D. NUMBER (copy from Item I of Form 1): NM0890010515

Form Approved. OMB No. 2040-0086 Approval expires 7-31-88

V. INTAKE AND EFFLUENT CHARACTERISTICS (continued from page 3 of Form 2-C)

OUTFALL NO. 04A153

PART A - You must provide the results of at least one analysis for every pollutant in this table. Complete one table for each outfall. See instructions for additional details.

1. POLLUTANT	2. EFFLUENT a. MAXIMUM DAILY VALUE (1) CONCENTRATION	(2) MASS	b. MAXIMUM 30 DAY VALUE (if available) (1) CONCENTRATION	(2) MASS	c. LONG TERM AVRG. VALUE (if available) (1) CONCENTRATION	(2) MASS	d. NO. OF ANALYSES	3. UNITS (specify if blank) a. CONCENTRATION	b. MASS	4. INTAKE (optional) a. LONG TERM AVERAGE VALUE (1) CONCENTRATION	(2) MASS	b. NO. OF ANALYSES
a. Biochemical Oxygen Demand (BOD)	< 2.0	< 75.7						mg/l	g/d			
b. Chemical Oxygen Demand (COD)	< 10.0	< 0.4						mg/l	g/d			
c. Total Organic Carbon (TOC)	0.6	22.3						mg/l	g/d			
d. Total Suspended Solids (TSS)	18.0	0.7						mg/l	g/d			
e. Ammonia (as N)	< 0.1	< 3.785						mg/l	g/d			
f. Flow	VALUE 10		VALUE		VALUE			gal/day		VALUE		
g. Temperature (winter)	VALUE 13.9		VALUE		VALUE			°C		VALUE		
h. Temperature (summer)	VALUE N/A		VALUE		VALUE			°C		VALUE		
i. pH	MINIMUM 8.45	MAXIMUM 8.80	MINIMUM	MAXIMUM				STANDARD UNITS				

PART B - Mark "X" in column 2-a for each pollutant you know or have reason to believe is present. Mark "X" in column 2-b for each pollutant you believe to be absent. If you mark column 2a for any pollutant which is limited either directly, or indirectly but expressly, in an effluent limitations guideline, you must provide the results of at least one analysis for that pollutant. For other pollutants for which you mark column 2a, you must provide quantitative data or an explanation of their presence in your discharge. Complete one table for each outfall. See the instructions for additional details and requirements.

1. POLLUTANT AND CAS NO. (if available)	2. MARK "X" a. BELIEVED PRESENT	b. BELIEVED ABSENT	3. EFFLUENT a. MAXIMUM DAILY VALUE (1) CONCENTRATION	(2) MASS	b. MAXIMUM 30 DAY VALUE (if available) (1) CONCENTRATION	(2) MASS	c. LONG TERM AVRG. VALUE (if available) (1) CONCENTRATION	(2) MASS	d. NO. OF ANALYSES	4. UNITS a. CONCENTRATION	b. MASS	5. INTAKE (optional) a. LONG TERM AVERAGE VALUE (1) CONCENTRATION	(2) MASS	b. NO. OF ANALYSES
a. Bromide (24959 67-5)			< 0.5	< 18.9						mg/l	g/d			
b. Chlorine, Total Residual	X		0.05	0.0						mg/l	mg/d			
c. Color	X		7.0							units				
d. Fecal Coliform		X												
e. Fluoride (16964-48-8)	X		0.21	7.9						mg/l	g/d			
f. Nitrate-Nitrite (as N)	X		0.304	11.5						mg/l	g/d			

CONTINUE ON REVERSE

ITEM V-B CONTINUED FROM FRONT

1. POLLUTANT AND CAS NO. (if available)	2. MARK "X" a. BELIEVED PRESENT	b. BELIEVED ABSENT	3. EFFLUENT a. MAXIMUM DAILY VALUE (1) CONCENTRATION	(2) MASS	b. MAXIMUM 30 DAY VALUE (if available) (1) CONCENTRATION	(2) MASS	c. LONG TERM AVRG. VALUE (if available) (1) CONCENTRATION	(2) MASS	d. NO. OF ANALYSES	4. UNITS a. CONCENTRATION	b. MASS	5. INTAKE (optional) a. LONG TERM AVERAGE VALUE (1) CONCENTRATION	(2) MASS	b. NO. OF ANALYSES
g. Nitrogen, Total Organic (as N)		X	< 0.5	< 18.9						mg/l	mg/d			
h. Oil and Grease		X	< 1.05	< 39.7						mg/l	mg/d			
i. Phosphorus (as P), Total (7723-14-0)	X		0.05	1.9						mg/l	mg/d			
j. Radioactivity														
(1) Alpha, Total	X		0.1	3.8						pCi/l	pCi/d			
(2) Beta, Total	X		6.6	0.2						pCi/l	nCi/d			
(3) Radium, Total	X													
(4) Radium 226, Total	X		0.06	2.3						pCi/l	pCi/d			
k. Sulfate (as SO_4) (14808-79-8)	X		3.16	0.1						mg/l	g/d			
l. Sulfide (as S)		X		0.0						mg/l	mg/d			
m. Sulfite (as SO_3) (14265-45-3)		X	< 0.05	< 1.9						mg/l	mg/d			
n. Surfactants		X	< 0.1	< 3.8						mg/l	mg/d			
o. Aluminum, Total (7429-90-5)		X	< 0.04	< 1.5						mg/l	mg/d			
p. Barium, Total (7440-39-3)	X		0.03	1.1						mg/l	mg/d			
q. Boron, Total (7440-42-8)	X		0.02	0.8						mg/l	mg/d			
r. Cobalt, Total (7440-48-4)		X	< 0.1	< 3.8						mg/l	mg/d			
s. Iron, Total (7439-89-6)	X		0.41	15.5						mg/l	mg/d			
t. Magnesium, Total (7439-95-4)	X		2.5	94.6						mg/l	mg/d			
u. Molybdenum, Total (7439-98-7)		X	< 0.02	< 0.8						mg/l	mg/d			
v. Manganese, Total (7439-96-5)	X		0.01	0.4						mg/l	mg/d			
w. Tin, Total (7440-31-5)		X	< 0.050	< 1.9						mg/l	mg/d			
x. Titanium, Total (7440-32-6)		X	< 0.004	< 0.2						mg/l	mg/d			

CONTINUE ON PAGE V-3

EPA I.D. NUMBER (copy from Item 1 of Form 1)	OUTFALL NUMBER
NM0890010515	04A153

Form Approved.
OMB No. 2040-0086
Approval expires 7-31-88

CONTINUED FROM PAGE 3 OF FORM 2-C

PART C - If you are a primary industry and this outfall contains process wastewater, refer to Table 2c-2 in the instructions to determine which of the GC/MS fractions you must test for. Mark "X" in column 2-a for all such GC/MS fractions that apply to your industry and for ALL toxic metals, cyanides, and total phenols. If you are not required to mark column 2-a *(secondary industries, nonprocess wastewater outfalls, and nonrequired GC/MS fractions)*, mark "X" in column 2-b for each pollutant you know or have reason to believe is present. Mark "X" in column 2-c for each pollutant you believe is absent. If you mark column 2a for any pollutant, you must provide the results of at least one analysis for that pollutant. If you mark column 2b for any pollutant, you must provide the results of at least one analysis for that pollutant if you know or have reason to believe it will be discharged in concentrations of 10 ppb or greater. If you mark column 2b for acrolein, acrylonitrile, 2,4 dinitrophenol, or 2-methyl-4, 6 dinitrophenol, you must provide the results of at least one analysis for each of these pollutants which you know or have reason to believe that you discharge in concentrations of 100 ppb or greater. Otherwise, for pollutants for which you mark column 2b, you must either submit at least one analysis or briefly describe the reasons the pollutant is expected to be discharged. Note that there are 7 pages to this part; please review each carefully. Complete one table *(all 7 pages)* for each outfall. See instructions for additional details and requirements.

1. POLLUTANT AND CAS NUMBER (if available)	2. MARK "X" a. TESTED BUT NOT REQUIRED	b. REQUIRED PRESENT	c. REQUIRED ABSENT	3. EFFLUENT a. MAXIMUM DAILY VALUE (1) CONCENTRATION	(2) MASS	b. MAXIMUM 30 DAY VALUE (if available) (1) CONCENTRATION	(2) MASS	c. LONG TERM AVRG. VALUE (if available) (1) CONCENTRATION	(2) MASS	d. NO. OF ANALYSES	4. UNITS a. CONCENTRATION	b. MASS	5. INTAKE (optional) a. LONG TERM AVERAGE VALUE (1) CONCENTRATION	(2) MASS	b. NO. OF ANALYSES
METALS, CYANIDE, AND TOTAL PHENOLS															
1M. Antimony, Total (7440-36-0)			X	< 0.050	< 1.9						mg/l	mg/d			
2M. Arsenic, Total (7440-38-2)		X		0.002	0.1						mg/l	mg/d			
3M. Beryllium, Total, 7440-41-7)			X	< 0.001	< 0.0						mg/l	mg/d			
4M. Cadmium, Total (7440-43-9)			X	< 0.010	< 0.4						mg/l	mg/d			
5M. Chromium, Total (7440-47-3)		X		0.040	1.5						mg/l	mg/d			
6M. Copper, Total (7440-50-8)		X		0.031	1.2						mg/l	mg/d			
7M. Lead, Total (7439-92-1)			X	< 0.050	< 1.9						mg/l	mg/d			
8M. Mercury, Total (7439-97-6)			X	< 0.0002	< 0.00						mg/l	mg/d			
9M. Nickel, Total (7440-02-0)		X		0.06	2.3						mg/l	mg/d			
10M. Selenium, Total (7782-49-2)			X	< 0.001	< 0.0						mg/l	mg/d			
11M. Silver, Total (7440-22-4)			X	< 0.010	< 0.4						mg/l	mg/d			
12M. Thallium, Total (7440-28-0)			X	< 0.4	< 15.1						mg/l	mg/d			
13M. Zinc, Total (7440-66-6)		X		0.043	1.6						mg/l	mg/d			
14M. Cyanide, Total (57-12-5)			X	0.01	0.4						mg/l	mg/d			
15M. Phenols, Total			X	< 0.01	< 0.4						mg/l	mg/d			
DIOXIN															
2,3,7,8-Tetrachlorodibenzo-P-Dioxin (1746-01-6)			X	DESCRIBE RESULTS											

CONTINUE ON REVERSE

1. POLLUTANT AND CAS NUMBER (if available)	2. MARK "X" a. Testing Required	b. Believed Present	c. Believed Absent	3. EFFLUENT a. MAXIMUM DAILY VALUE (1) Concentration	(2) Mass	b. MAXIMUM 30 DAY VALUE (if available) (1) Concentration	(2) Mass	c. LONG TERM AVRG. VALUE (if available) (1) Concentration	(2) Mass	d. NO. OF ANALYSES	4. UNITS a. CONCENTRATION	b. MASS	5. INTAKE (optional) a. LONG TERM AVERAGE VALUE (1) Concentration	(2) Mass	b. NO. OF ANALYSES
GC/MS FRACTION – VOLATILE COMPOUNDS															
1V. Acrolein (107-02-8)			X												
2V. Acrylonitrile (107-13-1)			X												
3V. Benzene (71-43-2)			X	< 0.005	< 0.2						mg/l	mg/d			
4V. Bis (Chloromethyl) Ether (542-88-1)			X												
5V. Bromoform (75-25-2)			X	< 0.005	< 0.2						mg/l	mg/d			
6V. Carbon Tetrachloride (56-23-5)			X	< 0.005	< 0.2						mg/l	mg/d			
7V. Chlorobenzene (108-90-7)			X	< 0.005	< 0.2						mg/l	mg/d			
8V. Chlorodibromomethane (124-48-1)			X	< 0.005	< 0.2						mg/l	mg/d			
9V. Chloroethane (75-00-3)			X	< 0.010	< 0.000						mg/l	mg/d			
10V. 2-Chloroethylvinyl Ether (110-75-8)			X												
11V. Chloroform (67-66-3)			X	< 0.005	< 0.2						mg/l	mg/d			
12V. Dichlorobromomethane (75-27-4)			X	< 0.005	< 0.2						mg/l	mg/d			
13V. Dichlorodifluoromethane (75-71-8)			X												
14V. 1,1-Dichloroethane (75-34-3)			X	< 0.005	< 0.2						mg/l	mg/d			
15V. 1,2 Dichloroethane (107-06-2)			X	< 0.005	< 0.2						mg/l	mg/d			
16V. 1,1 Dichloroethylene (75-35-4)			X	< 0.005	< 0.2						mg/l	mg/d			
17V. 1,2 Dichloropropane (78-87-5)			X	< 0.005	< 0.2						mg/l	kg/d			
18V. 1,3-Dichloropropylene (542-75-6)			X	<	< 0.0						mg/l	mg/d			
19V. Ethylbenzene (100-41-4)			X	< 0.005	< 0.2						mg/l	mg/d			
20V. Methyl Bromide (74-83-9)			X	< 0.010	< 0.4						mg/l	mg/d			
21V. Methyl Chloride (74-87-3)			X	< 0.010	< 0.4						mg/l	mg/d			

CONTINUE ON PAGE V-5

CONTINUED FROM PAGE V-4

NM0890010515 | 04A153 | Approval expires 7-31-88

1. POLLUTANT AND CAS NUMBER (if available)	2. MARK "X" a. Test and believed present	b. Believed present	c. Believed absent	3. EFFLUENT a. MAXIMUM DAILY VALUE (1) concentration	(2) mass	b. MAXIMUM 30 DAY VALUE (if available) (1) concentration	(2) mass	c. LONG TERM AVRG. VALUE (if available) (1) concentration	(2) mass	d. NO. OF ANALYSES	4. UNITS a. CONCENTRATION	b. MASS	5. INTAKE (optional) a. LONG TERM AVERAGE VALUE (1) concentration	(2) mass	b. NO. OF ANALYSES
GC/MS FRACTION — VOLATILE COMPOUNDS (continued)															
22V. Methylene Chloride (75-09-2)			X	< 0.005	< 0.2						mg/l	mg/d			
23V. 1,1,2,2-Tetrachloroethane (79-34-5)			X	< 0.005	< 0.2						mg/l	mg/d			
24V. Tetrachloroethylene (127-18-4)			X	< 0.005	< 0.2						mg/l	mg/d			
25V. Toluene (108-88-3)			X	< 0.005	< 0.2						mg/l	mg/d			
26V. 1,2-Trans-Dichloroethylene (156-60-5)			X	< 0.005	< 0.2						mg/l	mg/d			
27V. 1,1,1-Trichloroethane (71-55-6)			X	< 0.005	< 0.2						mg/l	mg/d			
28V. 1,1,2-Trichloroethane (79-00-5)			X	< 0.005	< 0.2						mg/l	mg/d			
29V. Trichloroethylene (79-01-6)			X	< 0.005	< 0.2						mg/l	mg/d			
30V. Trichlorofluoromethane (75-69-4)			X	< 0.005	< 0.2						mg/l	mg/d			
31V. Vinyl Chloride (75-01-4)			X	< 0.010	< 0.4						mg/l	mg/d			
GC/MS FRACTION — ACID COMPOUNDS															
1A. 2-Chlorophenol (95-57-8)			X	< 0.010	< 0.4						mg/l	mg/d			
2A. 2,4-Dichlorophenol (120-83-2)			X	< 0.010	< 0.4						mg/l	mg/d			
3A. 2,4-Dimethylphenol (105-67-9)			X	< 0.010	< 0.4						mg/l	mg/d			
4A. 4,6-Dinitro-O-Cresol (534-52-1)			X	< 0.010	< 0.4						mg/l	mg/d			
5A. 2,4-Dinitrophenol (51-28-5)			X	< 0.010	< 0.4						mg/l	mg/d			
6A. 2-Nitrophenol (88-75-5)			X	< 0.010	< 0.4						mg/l	mg/d			
7A. 4-Nitrophenol (100-02-7)			X	< 0.010	< 0.4						mg/l	mg/d			
8A. P-Chloro-M-Cresol (59-50-7)			X	< 0.010	< 0.4						mg/l	mg/d			
9A. Pentachlorophenol (87-86-5)			X	< 0.010	< 0.4						mg/l	mg/d			
10A. Phenol (108-95-2)			X	< 0.010	< 0.4						mg/l	mg/d			
11A. 2,4,6-Trichlorophenol (88-06-2)			X	< 0.010	< 0.4						mg/l	mg/d			

CONTINUE ON REVERSE

CONTINUED FROM THE FRONT

1. POLLUTANT AND CAS NUMBER (if available)	2. MARK "X" a. TESTING REQUIRED	b. BELIEVED PRESENT	c. BELIEVED ABSENT	3. EFFLUENT a. MAXIMUM DAILY VALUE (1) CONCENTRATION	(2) MASS	b. MAXIMUM 30 DAY VALUE (if available) (1) CONCENTRATION	(2) MASS	c. LONG TERM AVRG. VALUE (if available) (1) CONCENTRATION	(2) MASS	d. NO. OF ANALYSES	4. UNITS a. CONCENTRATION	b. MASS	5. INTAKE (optional) a. LONG TERM AVRG. VALUE (1) CONCENTRATION	(2) MASS	b. NO. OF ANALYSES
GC/MS FRACTION — BASE/NEUTRAL COMPOUNDS															
1B. Acenaphthene (83-32-9)			X	< 0.010	< 0.4						mg/l	mg/d			
2B. Acenaphthylene (208-96-8)			X	< 0.010	< 0.4						mg/l	mg/d			
3B. Anthracene (120-12-7)			X	< 0.010	< 0.4						mg/l	mg/d			
4B. Benzidine (92-87-5)			X	< 0.010	< 0.4						mg/l	mg/d			
5B. Benzo (a) Anthracene (56-55-3)			X	< 0.010	< 0.4						mg/l	mg/d			
6B. Benzo (a) Pyrene (50-32-8)			X	< 0.010	< 0.4						mg/l	mg/d			
7B. 3,4-Benzo-fluoranthene (205-99-2)			X	< 0.010	< 0.4						mg/l	mg/d			
8B. Benzo (ghi) Perylene (191-24-2)			X	< 0.010	< 0.4						mg/l	mg/d			
9B. Benzo (k) Fluoranthene (207-08-9)			X	< 0.010	< 0.4						mg/l	mg/d			
10B. Bis (2-Chloro-ethoxy) Methane (111-91-1)			X	< 0.010	< 0.4						mg/l	mg/d			
11B. Bis (2-Chloro-ethyl) Ether (111-44-4)			X	< 0.010	< 0.4						mg/l	mg/d			
12B. Bis (2-Chloro-isopropyl) Ether (102-80-1)			X	< 0.010	< 0.4						mg/l	mg/d			
13B. Bis (2-Ethyl-hexyl) Phthalate (117-81-7)			X	< 0.010	< 0.4						mg/l	mg/d			
14B. 4-Bromo-phenyl Phenyl Ether (101-55-3)			X	< 0.010	< 0.4						mg/l	mg/d			
15B. Butyl Benzyl Phthalate (85-68-7)			X	< 0.010	< 0.4						mg/l	mg/d			
16B. 2-Chloro-naphthalene (91-58-7)			X	< 0.010	< 0.4						mg/l	mg/d			
17B. 4-Chloro-phenyl Phenyl Ether (7005-72-3)			X	< 0.010	< 0.4						mg/l	mg/d			
18B. Chrysene (218-01-9)			X	< 0.010	< 0.4						mg/l	mg/d			
19B. Dibenzo (a,h) Anthracene (53-70-3)			X	< 0.010	< 0.4						mg/l	mg/d			
20B. 1,2 Dichloro-benzene (95-50-1)			X	< 0.010	< 0.4						mg/l	mg/d			
21B. 1,3-Dichloro-benzene (541-73-1)			X	< 0.010	< 0.4						mg/l	mg/d			

CONTINUE ON PAGE

CONTINUED FROM PAGE V-6

EPA I.D. NUMBER (copy from Item 1 of Form 1): NM0890010515

OUTFALL NUMBER: 04A153

Form Approved. OMB No. 2040-0086 Approval expires 7-31-88

1. POLLUTANT AND CAS NUMBER (if available)	2. MARK "X" a. Staff	b. Believed Present	c. Believed Absent	3. EFFLUENT a. MAXIMUM DAILY VALUE (1) Concentration	(2) Mass	b. MAXIMUM 30 DAY VALUE (if available) (1) Concentration	(2) Mass	c. LONG TERM AVRG. VALUE (if available) (1) Concentration	(2) Mass	d. NO. OF ANALYSES	4. UNITS a. CONCENTRATION	b. MASS	5. INTAKE (optional) a. LONG TERM AVERAGE VALUE (1) Concentration	(2) Mass	b. NO. OF ANALYSES
GC/MS FRACTION – BASE/NEUTRAL COMPOUNDS (continued)															
22B. 1,4-Dichlorobenzene (106-46-7)			X	< 0.010	< 0.4						mg/l	mg/d			
23B. 3,3'-Dichlorobenzidine (91-94-1)			X	< 0.010	< 0.4						mg/l	mg/d			
24B. Diethyl Phthalate (84-66-2)			X	< 0.010	< 0.4						mg/l	mg/d			
25B. Dimethyl Phthalate (131-11-3)			X	< 0.010	< 0.4						mg/l	mg/d			
26B. Di-N-Butyl Phthalate (84-74-2)			X	< 0.010	< 0.4						mg/l	mg/d			
27B. 2,4-Dinitrotoluene (121-14-2)			X	< 0.010	< 0.4						mg/l	mg/d			
28B. 2,6-Dinitrotoluene (606-20-2)			X	< 0.010	< 0.4						mg/l	mg/d			
29B. Di-N-Octyl Phthalate (117-84-0)			X	< 0.010	< 0.4						mg/l	mg/d			
30B. 1,2-Diphenylhydrazine (as Azobenzene) (122-66-7)			X	< 0.010	< 0.4						mg/l	mg/d			
31B. Fluoranthene (206-44-0)			X	< 0.010	< 0.4						mg/l	mg/d			
32B. Fluorene (86-73-7)			X	< 0.010	< 0.4						mg/l	mg/d			
33B. Hexachlorobenzene (118-74-1)			X	< 0.010	< 0.4						mg/l	mg/d			
34B. Hexachlorobutadiene (87-68-3)			X	< 0.010	< 0.4						mg/l	mg/d			
35B. Hexachlorocyclopentadiene (77-47-4)			X	< 0.010	< 0.4						mg/l	mg/d			
36B. Hexachloroethane (67-72-1)			X	< 0.010	< 0.4						mg/l	mg/d			
37B. Indeno (1,2,3-cd) Pyrene (193-39-5)			X	< 0.010	< 0.4						mg/l	mg/d			
38B. Isophorone (78-59-1)			X	< 0.010	< 0.4						mg/l	mg/d			
39B. Naphthalene (91-20-3)			X	< 0.010	< 0.4						mg/l	mg/d			
40B. Nitrobenzene (98-95-3)			X	< 0.010	< 0.4						mg/l	mg/d			
41B. N-Nitrosodimethylamine (62-75-9)			X	< 0.010	< 0.4						mg/l	mg/d			
42B. N-Nitrosodi-N-Propylamine (621-64-7)			X	< 0.010	< 0.4						mg/l	mg/d			

CONTINUE ON REVERSE

CONTINUED FROM THE FRONT

1. POLLUTANT AND CAS NUMBER (If available)	2. MARK "X" a. Test and Quantify	b. Believed Present	c. Believed Absent	3. EFFLUENT a. MAXIMUM DAILY VALUE (1) Concentration	(1) Mass	b. MAXIMUM 30 DAY VALUE (if available) (1) Concentration	(1) Mass	c. LONG TERM AVRG. VALUE (if available) (1) Concentration	(1) Mass	d. NO. OF ANALYSES	4. UNITS a. CONCENTRATION	b. MASS	5. INTAKE (optional) a. LONG TERM AVERAGE VALUE (1) Concentration	(1) Mass	b. NO. OF ANALYSES
GC/MS FRACTION — BASE/NEUTRAL COMPOUNDS (continued)															
438. N-Nitrosodiphenylamine (86-30-6)			X	< 0.010	< 0.4	-					mg/l	mg/d			
448. Phenanthrene (85-01-8)			X	< 0.010	< 0.4						mg/l	mg/d			
458. Pyrene (129-00-0)			X	< 0.010	< 0.4						mg/l	mg/d			
468. 1,2,4-Trichlorobenzene (120-82-1)			X	< 0.010	< 0.4						mg/l	mg/d			
GC/MS FRACTION — PESTICIDES															
1P. Aldrin (309-00-2)			X	< 0.06	< 2.3						ug/l	ug/d			
2P. α-BHC (319-84-6)			X	< 0.02	< 0.8						ug/l	ug/d			
3P. β-BHC (319-85-7)			X	< 0.1	< 3.8						ug/l	ug/d			
4P. γ-BHC (58-89-6)			X	< 0.03	< 1.1						ug/l	ug/d			
5P. δ-BHC (319-86-8)			X	< 0.12	< 4.5						ug/l	ug/d			
6P. Chlordane (57-74-9)			X	< 0.25	< 9.5						ug/l	ug/d			
7P. 4,4'-DDT (50-29-3)			X	< 0.06	< 2.3						ug/l	ug/d			
8P. 4,4'-DDE (72-55-9)			X	< 0.08	< 3.0						ug/l	ug/d			
9P. 4,4'-DDD (72-54-8)			X	< 0.08	< 3.0						ug/l	ug/d			
10P. Dieldrin (60-57-1)			X	< 0.08	< 3.0						ug/l	ug/d			
11P. α-Endosulfan (115-29-7)			X	< 0.05	< 1.9						ug/l	ug/d			
12P. β-Endosulfan (115-29-7)			X	< 0.08	< 3.0						ug/l	ug/d			
13P. Endosulfan sulfate (1031-07-8)			X	< 0.09	< 3.4						ug/l	ug/d			
14P. Endrin (72-20-8)			X	< 0.06	< 2.3						ug/l	ug/d			
15P. Endrin aldehyde (7421-93-4)			X	< 0.62	< 23.5						ug/l	ug/d			
16P. Heptachlor (76-44-8)			X	< 0.3	< 11.4						ug/l	ug/d			

CONTINUE ON PAGE V-9

CONTINUED FROM PAGE V-8

EPA I.D. NUMBER (copy from Item 1 of Form 1)	OUTFALL NUMBER
NM0890010515	04A153

Form Approved.
OMB No. 2040-0086
Approval expires 7-31-88

1. POLLUTANT AND CAS NUMBER (if available)	2. MARK "X" a. TESTED BUT NOT DETECTED	b. BELIEVED PRESENT	c. BELIEVED ABSENT	3. EFFLUENT a. MAXIMUM DAILY VALUE (1) CONCENTRATION	(2) MASS	b. MAXIMUM 30 DAY VALUE (if available) (1) CONCENTRATION	(2) MASS	c. LONG TERM AVRG. VALUE (if available) (1) CONCENTRATION	(2) MASS	d. NO. OF ANALYSES	4. UNITS a. CONCENTRATION	b. MASS	5. INTAKE (optional) a. LONG TERM AVERAGE VALUE (1) CONCENTRATION	(2) MASS	b. NO. OF ANALYSES
GC/MS FRACTION — PESTICIDES (continued)															
17P. Heptachlor Epoxide (1024-57-3)			X	< 0.04	< 1.5						ug/l	ug/d			
18P. PCB-1242 (53469-21-9)			X	< 0.68	< 25.7						ug/l	ug/d			
19P. PCB-1254 (11097-69-1)			X	< 0.68	< 25.7						ug/l	ug/d			
20P. PCB-1221 (11104-28-2)			X	N.D.											
21P. PCB-1232 (11141-16-5)			X	N.D.											
22P. PCB-1248 (12672-29-6)			X	N.D.											
23P. PCB-1260 (11096-82-5)			X	< 0.68	< 25.7						ug/l	ug/d			
24P. PCB-1016 (12674-11-2)			X	N.D.											
25P. Toxaphene (8001-35-2)			X	< 2.5	< 94.6						ug/l	ug/d			

☆U.S. GOVERNMENT PRINTING OFFICE : 1986 O - 491-151 (60161)

Please print or type in the unshaded areas only.

EPA I.D. NUMBER (copy from Item 1 of Form 1)
NM0890010515

Form Approved
OMB No. 2040-0086
Approval expires 7-31-88

FORM 2C NPDES

EPA

U.S. ENVIRONMENTAL PROTECTION AGENCY
APPLICATION FOR PERMIT TO DISCHARGE WASTEWATER
EXISTING MANUFACTURING, COMMERCIAL, MINING AND SILVICULTURAL OPERATIONS
Consolidated Permits Program

I. OUTFALL LOCATION

For each outfall, list the latitude and longitude of its location to the nearest 15 seconds and the name of the receiving water.

A. OUTFALL NUMBER (list)	B. LATITUDE			C. LONGITUDE			D. RECEIVING WATER (name)
	1. DEG.	2. MIN.	3. SEC.	1. DEG.	2. MIN.	3. SEC.	
04A131	35	52	0	106	17	55	Tributary to Mortandad Canyon, an ephemeral tributary to Rio Grande

II. FLOWS, SOURCES OF POLLUTION, AND TREATMENT TECHNOLOGIES

A. Attach a line drawing showing the water flow through the facility. Indicate sources of intake water, operations contributing wastewater to the effluent, and treatment units labeled to correspond to the more detailed descriptions in Item B. Construct a water balance on the line drawing by showing average flows between intakes, operations, treatment units, and outfalls. If a water balance cannot be determined (e.g., for certain mining activities), provide a pictorial description of the nature and amount of any sources of water and any collection or treatment measures.

B. For each outfall, provide a description of: (1) All operations contributing wastewater to the effluent, including process wastewater, sanitary wastewater, cooling water, and storm water runoff; (2) The average flow contributed by each operation; and (3) The treatment received by the wastewater. Continue on additional sheets if necessary.

1. OUTFALL NO. (list)	2. OPERATION(S) CONTRIBUTING FLOW		3. TREATMENT		
	a. OPERATION (list)	b. AVERAGE FLOW (include units)	a. DESCRIPTION	b. LIST CODES FROM TABLE 2C-1	
04A131	48-1-OPN-21				
	Roof drains (6)	storm water	None		
	Floor drains (9)	flow is nil	None		
	Trench drain	flow is nil	None		

OFFICIAL USE ONLY (effluent guidelines sub-categories)

CONTINUED FROM THE FRONT

C. Except for storm runoff, leaks, or spills, are any of the discharges described in Items II-A or B intermittent or seasonal?

☒ YES (complete the following table) ☐ NO (go to Section III)

1. OUTFALL NUMBER (list)	2. OPERATION(s) CONTRIBUTING FLOW (list)	3. FREQUENCY		4. FLOW				
		a. DAYS PER WEEK (specify average)	b. MONTHS PER YEAR (specify average)	a. FLOW RATE (in mgd)		b. TOTAL VOLUME (specify with units)		c. DURATION (in days)
				i. LONG TERM AVERAGE	ii. MAXIMUM DAILY	i. LONG TERM AVERAGE	ii. MAXIMUM DAILY	
04A131	Floor drains	5	12	0.000005	0.00001	5 GPD	10 GPD	260 day/yr

III. PRODUCTION

A. Does an effluent guideline limitation promulgated by EPA under Section 304 of the Clean Water Act apply to your facility?

☐ YES (complete Item III-B) ☒ NO (go to Section IV)

B. Are the limitations in the applicable effluent guideline expressed in terms of production (or other measure of operation)?

☐ YES (complete Item III-C) ☐ NO (go to Section IV)

C. If you answered "yes" to Item III-B, list the quantity which represents an actual measurement of your level of production, expressed in the terms and units used in the applicable effluent guideline, and indicate the affected outfalls.

1. AVERAGE DAILY PRODUCTION			2. AFFECTED OUTFALLS (list outfall numbers)
a. QUANTITY PER DAY	b. UNITS OF MEASURE	c. OPERATION, PRODUCT, MATERIAL, ETC. (specify)	

IV. IMPROVEMENTS

A. Are you now required by any Federal, State or local authority to meet any implementation schedule for the construction, upgrading or operation of wastewater treatment equipment or practices or any other environmental programs which may affect the discharges described in this application? This includes, but is not limited to, permit conditions, administrative or enforcement orders, enforcement compliance schedule letters, stipulations, court orders, and grant or loan conditions.

☐ YES (complete the following table) ☐ NO (go to Item IV-B)

1. IDENTIFICATION OF CONDITION, AGREEMENT, ETC.	2. AFFECTED OUTFALLS		3. BRIEF DESCRIPTION OF PROJECT	4. FINAL COMPLIANCE DATE	
	a. No.	b. SOURCE OF DISCHARGE		a. REQUIRED	b. PROJECTED
EPA Docket No. VI-92-1306		All	Complete Waste Stream Characterization surveys and implement corrective actions.	10/93	FY94

B. OPTIONAL: You may attach additional sheets describing any additional water pollution control programs (or other environmental projects which may affect your discharges) you now have underway or which you plan. Indicate whether each program is now underway or planned, and indicate your actual or planned schedules for construction. ☐ MARK "X" IF DESCRIPTION OF ADDITIONAL CONTROL PROGRAMS IS ATTACHED

CONTINUE ON PAGE 3

CONTINUED FROM PAGE 2

EPA I.D. NUMBER (copy from Item I of Form 1)
NM0890010515

Form Approved.
OMB No. 2040-0086
Approval expires 7-31-88

V. INTAKE AND EFFLUENT CHARACTERISTICS

A, B, & C: See instructions before proceeding — Complete one set of tables for each outfall — Annotate the outfall number in the space provided. NOTE: Tables V-A, V-B, and V-C are included on separate sheets numbered V-1 through V-9.

D. Use the space below to list any of the pollutants listed in Table 2c-3 of the instructions, which you know or have reason to believe is discharged or may be discharged from any outfall. For every pollutant you list, briefly describe the reasons you believe it to be present and report any analytical data in your possession.

1. POLLUTANT	2. SOURCE	1. POLLUTANT	2. SOURCE
see datasheet			

VI. POTENTIAL DISCHARGES NOT COVERED BY ANALYSIS

Is any pollutant listed in Item V-C a substance or a component of a substance which you currently use or manufacture as an intermediate or final product or byproduct?

☐ YES (list all such pollutants below) ☒ NO (go to Item VI-B)

CONTINUED FROM THE FRONT

VII. BIOLOGICAL TOXICITY TESTING DATA

Do you have any knowledge or reason to believe that any biological test for acute or chronic toxicity has been made on any of your discharges or on a receiving water in relation to your discharge within the last 3 years?

☐ YES *(identify the test(s) and describe their purposes below)* ☒ NO *(go to Section VIII)*

VIII. CONTRACT ANALYSIS INFORMATION

Were any of the analyses reported in Item V performed by a contract laboratory or consulting firm?

☐ YES *(list the name, address, and telephone number of, and pollutants analyzed by, each such laboratory or firm below)* ☐ NO *(go to Section IX)*

A. NAME	B. ADDRESS	C. TELEPHONE (area code & no.)	D. POLLUTANTS ANALYZED (list)

IX. CERTIFICATION

I certify under penalty of law that this document and all attachments were prepared under my direction or supervision in accordance with a system designed to assure that qualified personnel properly gather and evaluate the information submitted. Based on my inquiry of the person or persons who manage the system or those persons directly responsible for gathering the information, the information submitted is, to the best of my knowledge and belief, true, accurate, and complete. I am aware that there are significant penalties for submitting false information, including the possibility of fine and imprisonment for knowing violations.

A. NAME & OFFICIAL TITLE (type or print)	B. PHONE NO. (area code & no.)
JERRY L. BELLOWS, AREA MANAGER, DOE	505-667-5105
ALLEN J. TIEDMAN, ASSOC. DIRECTOR FOR OPERATIONS	505-667-9390
C. SIGNATURE	D. DATE SIGNED

Data from worst case composite.

PLEASE PRINT OR TYPE IN THE UNSHADED AREAS ONLY. You may report some or all of this information on seperate sheets (use the same format) instead of completing these pages. SEE INSTRUCTIONS.

EPA I.D. NUMBER (copy from Item I of Form 1): NM0890010515

Form Approved. OMB No. 2040-0086. Approval expires 7-31-88

V. INTAKE AND EFFLUENT CHARACTERISTICS (continued from page 3 of Form 2-C)

OUTFALL NO. 04A131

PART A - You must provide the results of at least one analysis for every pollutant in this table. Complete one table for each outfall. See instructions for additional details.

1. POLLUTANT	2. EFFLUENT a. MAXIMUM DAILY VALUE (1) CONCENTRATION	(2) MASS	b. MAXIMUM 30 DAY VALUE (if available) (1) CONCENTRATION	(2) MASS	c. LONG TERM AVG. VALUE (if available) (1) CONCENTRATION	(2) MASS	d. NO. OF ANALYSES	3. UNITS (specify if blank) a. CONCENTRATION	b. MASS	4. INTAKE (optional) a. LONG TERM AVERAGE VALUE (1) CONCENTRATION	(2) MASS	b. NO. OF ANALYSES
a. Biochemical Oxygen Demand (BOD)	< 2.0	< 75.7						mg/l	g/d			
b. Chemical Oxygen Demand (COD)	< 10.0	< 0.4						mg/l	g/d			
c. Total Organic Carbon (TOC)	0.6	22.3						mg/l	g/d			
d. Total Suspended Solids (TSS)	18.0	0.7						mg/l	g/d			
e. Ammonia (as N)	< 0.1	< 3.785						mg/l	g/d			
f. Flow	VALUE 10		VALUE		VALUE			gal/day		VALUE		
g. Temperature (winter)	VALUE 13.9		VALUE		VALUE			°C		VALUE		
h. Temperature (summer)	VALUE N/A		VALUE		VALUE			°C		VALUE		
i. pH	MINIMUM 8.45	MAXIMUM 8.60	MINIMUM	MAXIMUM				STANDARD UNITS				

PART B - Mark "X" in column 2-a for each pollutant you know or have reason to believe is present. Mark "X" in column 2-b for each pollutant you believe to be absent. If you mark column 2a for any pollutant which is limited either directly, or indirectly but expressly, in an effluent limitations guideline, you must provide the results of at least one analysis for that pollutant. For other pollutants for which you mark column 2a, you must provide quantitative data or an explanation of their presence in your discharge. Complete one table for each outfall. See the instructions for additional details and requirements.

1. POLLUTANT AND CAS NO. (if available)	2. MARK "X" a. EFFLUENT PRESENT	b. EFFLUENT ABSENT	3. EFFLUENT a. MAXIMUM DAILY VALUE (1) CONCENTRATION	(2) MASS	b. MAXIMUM 30 DAY VALUE (if available) (1) CONCENTRATION	(2) MASS	c. LONG TERM AVG. VALUE (if available) (1) CONCENTRATION	(2) MASS	d. NO. OF ANALYSES	4. UNITS a. CONCENTRATION	b. MASS	5. INTAKE (optional) a. LONG TERM AVERAGE VALUE (1) CONCENTRATION	(2) MASS	b. NO. OF ANALYSES
a. Bromide (24959 67-9)			< 0.5	< 18.9						mg/l	g/d			
b. Chlorine, Total Residual	X		0.05	0.0						mg/l	mg/d			
c. Color	X		7.0							units				
d. Fecal Coliform		X												
e. Fluoride (16984-48-8)	X		0.21	7.9						mg/l	g/d			
f. Nitrate-Nitrite (as N)	X		0.304	11.5						mg/l	g/d			

CONTINUE ON REVERSE

1. POLLUTANT AND CAS NO. (if available)	2. MARK "X" a. BELIEVED PRESENT	b. BELIEVED ABSENT	3. EFFLUENT a. MAXIMUM DAILY VALUE (1) CONCENTRATION	(2) MASS	b. MAXIMUM 30 DAY VALUE (if available) (1) CONCENTRATION	(2) MASS	c. LONG TERM AVRG. VALUE (if available) (1) CONCENTRATION	(2) MASS	d. NO. OF ANALYSES	4. UNITS a. CONCENTRATION	b. MASS	5. INTAKE (optional) a. LONG TERM AVERAGE VALUE (1) CONCENTRATION	(2) MASS	b. NO. OF ANALYSES
g. Nitrogen, Total Organic (as N)		X	< 0.5	< 18.9						mg/l	mg/d			
h. Oil and Grease		X	< 1.05	< 39.7						mg/l	mg/d			
i. Phosphorus (as P), Total (7723-14-0)	X		0.05	1.9						mg/l	mg/d			
j. Radioactivity														
(1) Alpha, Total	X		0.1	3.8						pCi/l	pCi/d			
(2) Beta, Total	X		6.6	0.2						pCi/l	nCi/d			
(3) Radium, Total	X													
(4) Radium 226, Total	X		0.06	2.3						pCi/l	pCi/d			
k. Sulfate (as SO_4) (14808-79-8)	X		3.16	0.1						mg/l	g/d			
l. Sulfide (as S)		X		0.0						mg/l	mg/d			
m. Sulfite (as SO_3) (14265-45-3)		X	< 0.05	< 1.9						mg/l	mg/d			
n. Surfactants		X	< 0.1	< 3.8						mg/l	mg/d			
o. Aluminum, Total (7429-90-5)		X	< 0.04	< 1.5						mg/l	mg/d			
p. Barium, Total (7440-39-3)	X		0.03	1.1						mg/l	mg/d			
q. Boron, Total (7440-42-8)	X		0.02	0.8						mg/l	mg/d			
r. Cobalt, Total (7440-48-4)		X	< 0.1	< 3.8						mg/l	mg/d			
s. Iron, Total (7439-89-6)	X		0.41	15.5						mg/l	mg/d			
t. Magnesium, Total (7439-96-4)	X		2.5	94.6						mg/l	mg/d			
u. Molybdenum, Total (7439-98-7)		X	< 0.02	< 0.8						mg/l	mg/d			
v. Manganese, Total (7439-96-5)	X		0.01	0.4						mg/l	mg/d			
w. Tin, Total (7440-31-5)		X	< 0.050	< 1.9						mg/l	mg/d			
x. Titanium, Total (7440-32-6)		X	< 0.004	< 0.2						mg/l	mg/d			

CONTINUE ON PAGE V-3

EPA I.D. NUMBER (copy from Item 1 of Form 1)	OUTFALL NUMBER
NM0890010515	04A131

Form Approved.
OMB No. 2040-0086
Approval expires 7-31-88

CONTINUED FROM PAGE 3 OF FORM 2-C

PART C - If you are a primary industry and this outfall contains process wastewater, refer to Table 2c-2 in the instructions to determine which of the GC/MS fractions you must test for. Mark "X" in column 2-a for all such GC/MS fractions that apply to your industry and for ALL toxic metals, cyanides, and total phenols. If you are not required to mark column 2-a (secondary industries, nonprocess wastewater outfalls, and nonrequired GC/MS fractions), mark "X" in column 2-b for each pollutant you know or have reason to believe is present. Mark "X" in column 2-c for each pollutant you believe is absent. If you mark column 2a for any pollutant, you must provide the results of at least one analysis for that pollutant. If you mark column 2b for any pollutant, you must provide the results of at least one analysis for that pollutant if you know or have reason to believe it will be discharged in concentrations of 10 ppb or greater. If you mark column 2b for acrolein, acrylonitrile, 2,4 dinitrophenol, or 2-methyl-4, 6 dinitrophenol, you must provide the results of at least one analysis for each of these pollutants which you know or have reason to believe that you discharge in concentrations of 100 ppb or greater. Otherwise, for pollutants for which you mark column 2b, you must either submit at least one analysis or briefly describe the reasons the pollutant is expected to be discharged. Note that there are 7 pages to this part; please review each carefully. Complete one table (all 7 pages) for each outfall. See instructions for additional details and requirements.

1. POLLUTANT AND CAS NUMBER (if available)	2. MARK "X"			3. EFFLUENT							4. UNITS		5. INTAKE (optional)		
	a. TEST-ING REQUIRED	b. BELIEVED PRESENT	c. BELIEVED ABSENT	a. MAXIMUM DAILY VALUE		b. MAXIMUM 30 DAY VALUE (if available)		c. LONG TERM AVRG. VALUE (if available)		d. NO. OF ANALYSES	a. CONCENTRATION	b. MASS	a. LONG TERM AVERAGE VALUE		b. NO. OF ANALYSES
				(1) CONCENTRATION	(2) MASS	(1) CONCENTRATION	(2) MASS	(1) CONCENTRATION	(2) MASS				(1) CONCENTRATION	(2) MASS	
METALS, CYANIDE, AND TOTAL PHENOLS															
1M. Antimony, Total (7440-36-0)			X	< 0.050	< 1.9						mg/l	mg/d			
2M. Arsenic, Total (7440-38-2)		X		0.002	0.1						mg/l	mg/d			
3M. Beryllium, Total, 7440-41-7)			X	< 0.001	< 0.0						mg/l	mg/d			
4M. Cadmium, Total (7440-43-9)			X	< 0.010	< 0.4						mg/l	mg/d			
5M. Chromium, Total (7440-47-3)		X		0.040	1.5						mg/l	mg/d			
6M. Copper, Total (7440-50-8)		X		0.031	1.2						mg/l	mg/d			
7M. Lead, Total (7439-92-1)			X	< 0.050	< 1.9						mg/l	mg/d			
8M. Mercury, Total (7439-97-6)			X	< 0.0002	< 0.00						mg/l	mg/d			
9M. Nickel, Total (7440-02-0)		X		0.06	2.3						mg/l	mg/d			
10M. Selenium, Total (7782-49-2)			X	< 0.001	< 0.0						mg/l	mg/d			
11M. Silver, Total (7440-22-4)			X	< 0.010	< 0.4						mg/l	mg/d			
12M. Thallium, Total (7440-28-0)			X	< 0.4	< 15.1						mg/l	mg/d			
13M. Zinc, Total (7440-66-6)		X		0.043	1.6						mg/l	mg/d			
14M. Cyanide, Total (57-12-5)			X	0.01	0.4						mg/l	mg/d			
15M. Phenols, Total			X	< 0.01	< 0.4						mg/l	mg/d			
DIOXIN															
2,3,7,8-Tetrachlorodibenzo-P-Dioxin (1746-01-6)			X	DESCRIBE RESULTS											

CONTINUE ON REVERSE

1. POLLUTANT AND CAS NUMBER (if available)	2. MARK "X" a. TREATMENT REQUIREMENT	b. REQUIREMENT	c. ALTERNATE REQUIREMENT	3. EFFLUENT a. MAXIMUM DAILY VALUE (1) CONCENTRATION	(2) MASS	b. MAXIMUM 30 DAY VALUE (if available) (1) CONCENTRATION	(2) MASS	c. LONG TERM AVRG. VALUE (if available) (1) CONCENTRATION	(2) MASS	d. NO. OF ANALYSES	4. UNITS a. CONCENTRATION	b. MASS	5. INTAKE (optional) a. LONG TERM AVERAGE VALUE (1) CONCENTRATION	(2) MASS	b. NO. OF ANALYSES
GC/MS FRACTION – VOLATILE COMPOUNDS															
1V. Acrolein (107-02-8)			X												
2V. Acrylonitrile (107-13-1)			X												
3V. Benzene (71-43-2)			X	< 0.005	< 0.2						mg/l	mg/d			
4V. Bis (Chloromethyl) Ether (542-88-1)			X												
5V. Bromoform (75-25-2)			X	< 0.005	< 0.2						mg/l	mg/d			
6V. Carbon Tetrachloride (56-23-5)			X	< 0.005	< 0.2						mg/l	mg/d			
7V. Chlorobenzene (108-90-7)			X	< 0.005	< 0.2						mg/l	mg/d			
8V. Chlorodibromomethane (124-48-1)			X	< 0.005	< 0.2						mg/l	mg/d			
9V. Chloroethane (75-00-3)			X	< 0.010	< 0.000						mg/l	mg/d			
10V. 2-Chloroethylvinyl Ether (110-75-8)			X												
11V. Chloroform (67-66-3)			X	< 0.005	< 0.2						mg/l	mg/d			
12V. Dichlorobromomethane (75-27-4)			X	< 0.005	< 0.2						mg/l	mg/d			
13V. Dichlorodifluoromethane (75-71-8)			X												
14V. 1,1-Dichloroethane (75-34-3)			X	< 0.005	< 0.2						mg/l	mg/d			
15V. 1,2-Dichloroethane (107-06-2)			X	< 0.005	< 0.2						mg/l	mg/d			
16V. 1,1-Dichloroethylene (75-35-4)			X	< 0.005	< 0.2						mg/l	mg/d			
17V. 1,2-Dichloropropane (78-87-5)			X	< 0.005	< 0.2						mg/l	kg/d			
18V. 1,3-Dichloropropylene (542-75-6)			X	<	< 0.0						mg/l	mg/d			
19V. Ethylbenzene (100-41-4)			X	< 0.005	< 0.2						mg/l	mg/d			
20V. Methyl Bromide (74-83-9)			X	< 0.010	< 0.4						mg/l	mg/d			
21V. Methyl Chloride (74-87-3)			X	< 0.010	< 0.4						mg/l	mg/d			

CONTINUE ON PAGE V-5

CONTINUED FROM PAGE V-4

EPA I.D. NUMBER (copy from Item 1 of Form 1): NM0890010515

OUTFALL NUMBER: 04A131

OMB No. 2040-0086
Approval expires 7-31-89

1. POLLUTANT AND CAS NUMBER (if available)	2. MARK "X" a. Testing Required	b. Believed Present	c. Believed Absent	3. EFFLUENT a. MAXIMUM DAILY VALUE (1) Concentration	(2) Mass	b. MAXIMUM 30 DAY VALUE (if available) (1) Concentration	(2) Mass	c. LONG TERM AVRG. VALUE (if available) (1) Concentration	(2) Mass	d. NO. OF ANALYSES	4. UNITS a. Concentration	b. Mass	5. INTAKE (optional) a. Long Term Average Value (1) Concentration	(2) Mass	b. No. of Analyses
GC/MS FRACTION — VOLATILE COMPOUNDS (continued)															
22V. Methylene Chloride (75-09-2)			X	< 0.005	< 0.2						mg/l	mg/d			
23V. 1,1,2,2-Tetrachloroethane (79-34-5)			X	< 0.005	< 0.2						mg/l	mg/d			
24V. Tetrachloroethylene (127-18-4)			X	< 0.005	< 0.2						mg/l	mg/d			
25V. Toluene (108-88-3)			X	< 0.005	< 0.2						mg/l	mg/d			
26V. 1,2-Trans-Dichloroethylene (156-60-5)			X	< 0.005	< 0.2						mg/l	mg/d			
27V. 1,1,1-Trichloroethane (71-55-6)			X	< 0.005	< 0.2						mg/l	mg/d			
28V. 1,1,2-Trichloroethane (79-00-5)			X	< 0.005	< 0.2						mg/l	mg/d			
29V. Trichloroethylene (79-01-6)			X	< 0.005	< 0.2						mg/l	mg/d			
30V. Trichlorofluoromethane (75-69-4)			X	< 0.005	< 0.2						mg/l	mg/d			
31V. Vinyl Chloride (75-01-4)			X	< 0.010	< 0.4						mg/l	mg/d			
GC/MS FRACTION — ACID COMPOUNDS															
1A. 2-Chlorophenol (95-57-8)			X	< 0.010	< 0.4						mg/l	mg/d			
2A. 2,4-Dichlorophenol (120-83-2)			X	< 0.010	< 0.4						mg/l	mg/d			
3A. 2,4-Dimethylphenol (105-67-9)			X	< 0.010	< 0.4						mg/l	mg/d			
4A. 4,6-Dinitro-O-Cresol (534-52-1)			X	< 0.010	< 0.4						mg/l	mg/d			
5A. 2,4-Dinitrophenol (51-28-5)			X	< 0.010	< 0.4						mg/l	mg/d			
6A. 2-Nitrophenol (88-75-5)			X	< 0.010	< 0.4						mg/l	mg/d			
7A. 4-Nitrophenol (100-02-7)			X	< 0.010	< 0.4						mg/l	mg/d			
8A. P-Chloro M-Cresol (59-50-7)			X	< 0.010	< 0.4						mg/l	mg/d			
9A. Pentachlorophenol (87-86-5)			X	< 0.010	< 0.4						mg/l	mg/d			
10A. Phenol (108-95-2)			X	< 0.010	< 0.4						mg/l	mg/d			
11A. 2,4,6-Trichlorophenol (88-06-2)			X	< 0.010	< 0.4						mg/l	mg/d			

CONTINUE ON REVERSE

CONTINUED FROM THE FRONT

1. POLLUTANT AND CAS NUMBER (if available)	2. MARK "X" a. Believed Absent	b. Believed Present	c. Bel. Absent	3. EFFLUENT a. MAXIMUM DAILY VALUE (1) Concentration	(2) Mass	b. MAXIMUM 30 DAY VALUE (if available) (1) Concentration	(2) Mass	c. LONG TERM AVRG. VALUE (if available) (1) Concentration	(2) Mass	d. NO. OF ANALYSES	4. UNITS a. CONCENTRATION	b. MASS	5. INTAKE (optional) a. LONG TERM AVERAGE VALUE (1) Concentration	(2) Mass	b. NO. OF ANALYSES
GC/MS FRACTION – BASE/NEUTRAL COMPOUNDS															
1B. Acenaphthene (83-32-9)			X	< 0.010	< 0.4						mg/l	mg/d			
2B. Acenaphthylene (208-96-8)			X	< 0.010	< 0.4						mg/l	mg/d			
3B. Anthracene (120-12-7)			X	< 0.010	< 0.4						mg/l	mg/d			
4B. Benzidine (92-87-5)			X	< 0.010	< 0.4						mg/l	mg/d			
5B. Benzo (a) Anthracene (56-55-3)			X	< 0.010	< 0.4						mg/l	mg/d			
6B. Benzo (a) Pyrene (50-32-8)			X	< 0.010	< 0.4						mg/l	mg/d			
7B. 3,4-Benzo-fluoranthene (205-99-2)			X	< 0.010	< 0.4						mg/l	mg/d			
8B. Benzo (ghi) Perylene (191-24-2)			X	< 0.010	< 0.4						mg/l	mg/d			
9B. Benzo (k) Fluoranthene (207-08-9)			X	< 0.010	< 0.4						mg/l	mg/d			
10B. Bis (2-Chloro-ethoxy) Methane (111-91-1)			X	< 0.010	< 0.4						mg/l	mg/d			
11B. Bis (2-Chloro-ethyl) Ether (111-44-4)			X	< 0.010	< 0.4						mg/l	mg/d			
12B. Bis (2-Chloro-propyl) Ether (102-80-1)			X	< 0.010	< 0.4						mg/l	mg/d			
13B. Bis (2-Ethyl-hexyl) Phthalate (117-81-7)			X	< 0.010	< 0.4						mg/l	mg/d			
14B. 4-Bromo-phenyl Phenyl Ether (101-55-3)			X	< 0.010	< 0.4						mg/l	mg/d			
15B. Butyl Benzyl Phthalate (85-68-7)			X	< 0.010	< 0.4						mg/l	mg/d			
16B. 2-Chloro-naphthalene (91-58-7)			X	< 0.010	< 0.4						mg/l	mg/d			
17B. 4-Chloro-phenyl Phenyl Ether (7005-72-3)			X	< 0.010	< 0.4						mg/l	mg/d			
18B. Chrysene (218-01-9)			X	< 0.010	< 0.4						mg/l	mg/d			
19B. Dibenzo (a,h) Anthracene (53-70-3)			X	< 0.010	< 0.4						mg/l	mg/d			
20B. 1,2 Dichloro-benzene (95-50-1)			X	< 0.010	< 0.4						mg/l	mg/d			
21B. 1,3 Dichloro-benzene (541-73-1)			X	< 0.010	< 0.4						mg/l	mg/d			

CONTINUE ON PAGE

CONTINUED FROM PAGE V-6

EPA I.D. NUMBER (copy from Item 1 of Form 1)	OUTFALL NUMBER
NM0890010515	04A131

Form Approved. OMB No. 2040-0086 Approval expires 7-31-85

1. POLLUTANT AND CAS NUMBER (if available)	2. MARK "X" a. Testing Required	b. Believed Present	c. Believed Absent	3. EFFLUENT a. MAXIMUM DAILY VALUE (1) Concentration	(2) Mass	b. MAXIMUM 30 DAY VALUE (if available) (1) Concentration	(2) Mass	c. LONG TERM AVRG. VALUE (if available) (1) Concentration	(2) Mass	d. NO. OF ANALYSES	4. UNITS a. CONCENTRATION	b. MASS	5. INTAKE (optional) a. LONG TERM AVERAGE VALUE (1) Concentration	(2) Mass	b. NO. OF ANALYSES
GC/MS FRACTION — BASE/NEUTRAL COMPOUNDS (continued)															
22B. 1,4-Dichlorobenzene (106-46-7)			X	< 0.010	< 0.4						mg/l	mg/d			
23B. 3,3'-Dichlorobenzidine (91-94-1)			X	< 0.010	< 0.4						mg/l	mg/d			
24B. Diethyl Phthalate (84-66-2)			X	< 0.010	< 0.4						mg/l	mg/d			
25B. Dimethyl Phthalate (131-11-3)			X	< 0.010	< 0.4						mg/l	mg/d			
26B. Di-N-Butyl Phthalate (84-74-2)			X	< 0.010	< 0.4						mg/l	mg/d			
27B. 2,4-Dinitrotoluene (121-14-2)			X	< 0.010	< 0.4						mg/l	mg/d			
28B. 2,6-Dinitrotoluene (606-20-2)			X	< 0.010	< 0.4						mg/l	mg/d			
29B. Di-N-Octyl Phthalate (117-84-0)			X	< 0.010	< 0.4						mg/l	mg/d			
30B. 1,2-Diphenylhydrazine (as Azobenzene) (122-66-7)			X	< 0.010	< 0.4						mg/l	mg/d			
31B. Fluoranthene (206-44-0)			X	< 0.010	< 0.4						mg/l	mg/d			
32B. Fluorene (86-73-7)			X	< 0.010	< 0.4						mg/l	mg/d			
33B. Hexachlorobenzene (118-74-1)			X	< 0.010	< 0.4						mg/l	mg/d			
34B. Hexachlorobutadiene (87-68-3)			X	< 0.010	< 0.4						mg/l	mg/d			
35B. Hexachlorocyclopentadiene (77-47-4)			X	< 0.010	< 0.4						mg/l	mg/d			
36B. Hexachloroethane (67-72-1)			X	< 0.010	< 0.4						mg/l	mg/d			
37B. Indeno (1,2,3-cd) Pyrene (193-39-5)			X	< 0.010	< 0.4						mg/l	mg/d			
38B. Isophorone (78-59-1)			X	< 0.010	< 0.4						mg/l	mg/d			
39B. Naphthalene (91-20-3)			X	< 0.010	< 0.4						mg/l	mg/d			
40B. Nitrobenzene (98-95-3)			X	< 0.010	< 0.4						mg/l	mg/d			
41B. N-Nitrosodimethylamine (62-75-9)			X	< 0.010	< 0.4						mg/l	mg/d			
42B. N-Nitrosodi-N-Propylamine (621-64-7)			X	< 0.010	< 0.4						mg/l	mg/d			

CONTINUE ON REVERSE

CONTINUED FROM THE FRONT

1. POLLUTANT AND CAS NUMBER (if available)	2. MARK "X" a. Present in Effluent	b. Present in Intake	c. Absent	3. EFFLUENT a. MAXIMUM DAILY VALUE (1) Concentration	(2) Mass	b. MAXIMUM 30 DAY VALUE (if available) (1) Concentration	(2) Mass	c. LONG TERM AVRG. VALUE (if available) (1) Concentration	(2) Mass	d. NO. OF ANALYSES	4. UNITS a. CONCENTRATION	b. MASS	5. INTAKE (optional) a. LONG TERM AVERAGE VALUE (1) Concentration	(2) Mass	b. NO. OF ANALYSES
C C/MS FRACTION – BASE/NEUTRAL COMPOUNDS (continued)															
38. N-Nitrosodiphenylamine (86-30-6)			X	< 0.010	< 0.4						mg/l	mg/d			
38. Phenanthrene (85-01-8)			X	< 0.010	< 0.4						mg/l	mg/d			
38. Pyrene (129-00-0)			X	< 0.010	< 0.4						mg/l	mg/d			
38. 1,2,4-Trichlorobenzene (120-82-1)			X	< 0.010	< 0.4						mg/l	mg/d			
C C/MS FRACTION – PESTICIDES															
P. Aldrin (309-00-2)			X	< 0.06	< 2.3						ug/l	ug/d			
P. α-BHC (319-84-6)			X	< 0.02	< 0.8						ug/l	ug/d			
P. β-BHC (319-85-7)			X	< 0.1	< 3.8						ug/l	ug/d			
P. γ-BHC (58-89-9)			X	< 0.03	< 1.1						ug/l	ug/d			
P. δ-BHC (319-86-8)			X	< 0.12	< 4.5						ug/l	ug/d			
P. Chlordane (57-74-9)			X	< 0.25	< 9.5						ug/l	ug/d			
P. 4,4'-DDT (50-29-3)			X	< 0.06	< 2.3						ug/l	ug/d			
P. 4,4'-DDE (72-55-9)			X	< 0.08	< 3.0						ug/l	ug/d			
P. 4,4'-DDD (72-54-8)			X	< 0.08	< 3.0						ug/l	ug/d			
P. Dieldrin (60-57-1)			X	< 0.08	< 3.0						ug/l	ug/d			
P. α-Endosulfan (115-29-7)			X	< 0.05	< 1.9						ug/l	ug/d			
P. β-Endosulfan (115-29-7)			X	< 0.08	< 3.0						ug/l	ug/d			
P. Endosulfan Sulfate (1031-07-8)			X	< 0.09	< 3.4						ug/l	ug/d			
P. Endrin (72-20-8)			X	< 0.06	< 2.3						ug/l	ug/d			
P. Endrin Aldehyde (7421-93-4)			X	< 0.62	< 23.5						ug/l	ug/d			
P. Heptachlor (76-44-8)			X	< 0.3	< 11.4						ug/l	ug/d			

CONTINUE ON PAGE V-9

CONTINUED FROM PAGE V-8

EPA I.D. NUMBER (copy from Item I of Form 1)	OUTFALL NUMBER
NM0890010515	04A131

Form Approved.
OMB No. 2040-0086
Approval expires 7-31-89

1. POLLUTANT AND CAS NUMBER (if available)	2. MARK "X" a. BELIEVED PRESENT	b. BELIEVED ABSENT	c. BELIEVED ABSENT	3. EFFLUENT a. MAXIMUM DAILY VALUE (1) CONCENTRATION	(2) MASS	b. MAXIMUM 30 DAY VALUE (if available) (1) CONCENTRATION	(2) MASS	c. LONG TERM AVRG. VALUE (if available) (1) CONCENTRATION	(2) MASS	d. NO. OF ANALYSES	4. UNITS a. CONCENTRATION	b. MASS	5. INTAKE (optional) a. LONG TERM AVERAGE VALUE (1) CONCENTRATION	(2) MASS	b. NO. OF ANALYSES
GC/MS FRACTION – PESTICIDES (continued)															
17P. Heptachlor Epoxide (1024-57-3)			X	< 0.04	< 1.5						ug/l	ug/d			
18P. PCB-1242 (53469-21-9)			X	< 0.68	< 25.7						ug/l	ug/d			
19P. PCB-1254 (11097-69-1)			X	< 0.68	< 25.7						ug/l	ug/d			
20P. PCB-1221 (11104-28-2)			X	N.D.											
21P. PCB-1232 (11141-16-5)			X	N.D.											
22P. PCB-1248 (12672-29-6)			X	N.D.											
23P. PCB-1260 (11096-82-5)			X	< 0.68	< 25.7						ug/l	ug/d			
24P. PCB-1016 (12674-11-2)			X	N.D.											
25P. Toxaphene (8001-35-2)			X	< 2.5	< 94.6						ug/l	ug/d			

☆U.S. GOVERNMENT PRINTING OFFICE: 1986 O - [illegible]

Please print or type in the unshaded areas only.

EPA I.D. NUMBER (copy from Item 1 of Form 1)
NM0890010515

Form Approved
OMB No. 2040-0086
Approval expires 7-31-88

FORM 2C NPDES

EPA

U.S. ENVIRONMENTAL PROTECTION AGENCY
APPLICATION FOR PERMIT TO DISCHARGE WASTEWATER
EXISTING MANUFACTURING, COMMERCIAL, MINING AND SILVICULTURAL OPERATIONS
Consolidated Permits Program

I. OUTFALL LOCATION

For each outfall, list the latitude and longitude of its location to the nearest 15 seconds and the name of the receiving water.

A. OUTFALL NUMBER (list)	B. LATITUDE			C. LONGITUDE			D. RECEIVING WATER (name)
	1. deg.	2. min.	3. sec.	1. deg.	2. min.	3. sec.	
04A152	35	51	58	106	18	21	Tributary to Mortandad Canyon, an ephemeral tributary to the Rio Grande

II. FLOWS, SOURCES OF POLLUTION, AND TREATMENT TECHNOLOGIES

A. Attach a line drawing showing the water flow through the facility. Indicate sources of intake water, operations contributing wastewater to the effluent, and treatment units labeled to correspond to the more detailed descriptions in Item B. Construct a water balance on the line drawing by showing average flows between intakes, operations, treatment units, and outfalls. If a water balance cannot be determined (e.g., for certain mining activities), provide a pictorial description of the nature and amount of any sources of water and any collection or treatment measures.

B. For each outfall, provide a description of: (1) All operations contributing wastewater to the effluent, including process wastewater, sanitary wastewater, cooling water, and storm water runoff; (2) The average flow contributed by each operation; and (3) The treatment received by the wastewater. Continue on additional sheets if necessary.

1. OUTFALL NO. (list)	2. OPERATION(S) CONTRIBUTING FLOW		3. TREATMENT		
	a. OPERATION (list)	b. AVERAGE FLOW (include units)	a. DESCRIPTION	b. LIST CODES FROM TABLE 2C-1	
152	48-28-OPN-2 non-contact cooling water	7500 GPD	None		

OFFICIAL USE ONLY (effluent guidelines sub-categories)

CONTINUED FROM THE FRONT

C. Except for storm runoff, leaks, or spills, are any of the discharges described in Items II-A or B intermittent or seasonal?

☒ YES (complete the following table) ☐ NO (go to Section III)

1. OUTFALL NUMBER (list)	2. OPERATION(s) CONTRIBUTING FLOW (list)	3. FREQUENCY		4. FLOW				
		a. DAYS PER WEEK (specify average)	b. MONTHS PER YEAR (specify average)	a. FLOW RATE (in mgd)		b. TOTAL VOLUME (specify with units)		c. DURATION (in days)
				i. LONG TERM AVERAGE	ii. MAXIMUM DAILY	i. LONG TERM AVERAGE	ii. MAXIMUM DAILY	
04A152	Non-contact cooling water	5	12	0.0075	0.0095	7500 GPD	9500 GPD	260 day/yr

III. PRODUCTION

A. Does an effluent guideline limitation promulgated by EPA under Section 304 of the Clean Water Act apply to your facility?

☐ YES (complete Item III-B) ☒ NO (go to Section IV)

B. Are the limitations in the applicable effluent guideline expressed in terms of production (or other measure of operation)?

☐ YES (complete Item III-C) ☐ NO (go to Section IV)

C. If you answered "yes" to Item III-B, list the quantity which represents an actual measurement of your level of production, expressed in the terms and units used in the applicable effluent guideline, and indicate the affected outfalls.

1. AVERAGE DAILY PRODUCTION			2. AFFECTED OUTFALLS (list outfall numbers)
a. QUANTITY PER DAY	b. UNITS OF MEASURE	c. OPERATION, PRODUCT, MATERIAL, ETC. (specify)	

IV. IMPROVEMENTS

A. Are you now required by any Federal, State or local authority to meet any implementation schedule for the construction, upgrading or operation of wastewater treatment equipment or practices or any other environmental programs which may affect the discharges described in this application? This includes, but is not limited to, permit conditions, administrative or enforcement orders, enforcement compliance schedule letters, stipulations, court orders, and grant or loan conditions.

☒ YES (complete the following table) ☐ NO (go to Item IV-B)

1. IDENTIFICATION OF CONDITION, AGREEMENT, ETC.	2. AFFECTED OUTFALLS		3. BRIEF DESCRIPTION OF PROJECT	4. FINAL COMPLIANCE DATE	
	a. No.	b. SOURCE OF DISCHARGE		a. REQUIRED	b. PROPOSED
EPA Docket No. VI-92-1306		All	Complete Waste Stream Characterization surveys and implement corrective actions.	11/93	FY94

B. OPTIONAL: You may attach additional sheets describing any additional water pollution control programs (or other environmental projects which may affect your discharges) you now have underway or which you plan. Indicate whether each program is now underway or planned, and indicate your actual or planned schedules for construction. ☐ MARK "X" IF DESCRIPTION OF ADDITIONAL CONTROL PROGRAMS IS ATTACHED

 CONTINUE ON PAGE 3

CONTINUED FROM PAGE 2

EPA I.D. NUMBER (copy from Item 1 of Form 1)
NM0890010515

Form Approved.
OMB No. 2040-0086
Approval expires 7-31-88

V. INTAKE AND EFFLUENT CHARACTERISTICS

A, B, & C: See instructions before proceeding – Complete one set of tables for each outfall – Annotate the outfall number in the space provided. NOTE: Tables V-A, V-B, and V-C are included on separate sheets numbered V-1 through V-9.

D. Use the space below to list any of the pollutants listed in Table 2c-3 of the instructions, which you know or have reason to believe is discharged or may be discharged from any outfall. For every pollutant you list, briefly describe the reasons you believe it to be present and report any analytical data in your possession.

1. POLLUTANT	2. SOURCE	1. POLLUTANT	2. SOURCE
see datasheet			

VI. POTENTIAL DISCHARGES NOT COVERED BY ANALYSIS

Is any pollutant listed in Item V-C a substance or a component of a substance which you currently use or manufacture as an intermediate or final product or byproduct?

☐ YES (list all such pollutants below) ☒ NO (go to Item VI-B)

CONTINUED FROM THE FRONT

VII. BIOLOGICAL TOXICITY TESTING DATA

Do you have any knowledge or reason to believe that any biological test for acute or chronic toxicity has been made on any of your discharges or on a receiving water in relation to your discharge within the last 3 years?

☐ YES *(identify the test(s) and describe their purposes below)* ☒ NO *(go to Section VIII)*

VIII. CONTRACT ANALYSIS INFORMATION

Were any of the analyses reported in Item V performed by a contract laboratory or consulting firm?

☐ YES *(list the name, address, and telephone number of, and pollutants analysed by, each such laboratory or firm below)* ☒ NO *(go to Section IX)*

A. NAME	B. ADDRESS	C. TELEPHONE (area code & no.)	D. POLLUTANTS ANALYZED (list)

IX. CERTIFICATION

I certify under penalty of law that this document and all attachments were prepared under my direction or supervision in accordance with a system designed to assure that qualified personnel properly gather and evaluate the information submitted. Based on my inquiry of the person or persons who manage the system or those persons directly responsible for gathering the information, the information submitted is, to the best of my knowledge and belief, true, accurate, and complete. I am aware that there are significant penalties for submitting false information, including the possibility of fine and imprisonment for knowing violations.

A. NAME & OFFICIAL TITLE *(type or print)*	B. PHONE NO. *(area code & no.)*
JERRY L. BELLOWS, AREA MANAGER, DOE	505-667-5105
ALLEN J. TIEDMAN, ASSOC. DIRECTOR FOR OPERATIONS	505-667-9390
C. SIGNATURE	D. DATE SIGNED

Data from worst case composite.

PLEASE PRINT OR TYPE IN THE UNSHADED AREAS ONLY. You may report some or all of this information on separate sheets (use the same format) instead of completing these pages. SEE INSTRUCTIONS.

EPA I.D. NUMBER (copy from Item 1 of Form 1): NM0890010515

Form Approved. OMB No. 2040-0086. Approval expires 7-31-88

V. INTAKE AND EFFLUENT CHARACTERISTICS (continued from page 3 of Form 2-C)

OUTFALL NO. 04A152

PART A - You must provide the results of at least one analysis for every pollutant in this table. Complete one table for each outfall. See instructions for additional details.

1. POLLUTANT	2. EFFLUENT a. MAXIMUM DAILY VALUE (1) CONCENTRATION	(2) MASS	b. MAXIMUM 30 DAY VALUE (if available) (1) CONCENTRATION	(2) MASS	c. LONG TERM AVRG. VALUE (if available) (1) CONCENTRATION	(2) MASS	d. NO. OF ANALYSES	3. UNITS (specify if blank) a. CONCENTRATION	b. MASS	4. INTAKE (optional) a. LONG TERM AVERAGE VALUE (1) CONCENTRATION	(2) MASS	b. NO. OF ANALYSES
a. Biochemical Oxygen Demand (BOD)	< 2.0	< 71.9						mg/l	g/d			
b. Chemical Oxygen Demand (COD)	< 10.0	< 359.6						mg/l	g/d			
c. Total Organic Carbon (TOC)	0.6	21.2						mg/l	g/d			
d. Total Suspended Solids (TSS)	18.0	647.2						mg/l	g/d			
e. Ammonia (as N)	< 0.1	< 3.596						mg/l	g/d			
f. Flow	VALUE 9500		VALUE		VALUE			gal/day		VALUE		
g. Temperature (winter)	VALUE 13.9		VALUE		VALUE			°C		VALUE		
h. Temperature (summer)	VALUE N/A		VALUE		VALUE			°C		VALUE		
i. pH	MINIMUM 8.45	MAXIMUM 8.80	MINIMUM	MAXIMUM				STANDARD UNITS				

PART B - Mark "X" in column 2-a for each pollutant you know or have reason to believe is present. Mark "X" in column 2-b for each pollutant you believe to be absent. If you mark column 2a for any pollutant which is limited either directly, or indirectly but expressly, in an effluent limitations guideline, you must provide the results of at least one analysis for that pollutant. For other pollutants for which you mark column 2a, you must provide quantitative data or an explanation of their presence in your discharge. Complete one table for each outfall. See the instructions for additional details and requirements.

1. POLLUTANT AND CAS NO. (if available)	2. MARK "X" a. BELIEVED PRESENT	b. BELIEVED ABSENT	3. EFFLUENT a. MAXIMUM DAILY VALUE (1) CONCENTRATION	(2) MASS	b. MAXIMUM 30 DAY VALUE (if available) (1) CONCENTRATION	(2) MASS	c. LONG TERM AVRG. VALUE (if available) (1) CONCENTRATION	(2) MASS	d. NO. OF ANALYSES	4. UNITS a. CONCENTRATION	b. MASS	5. INTAKE (optional) a. LONG TERM AVERAGE VALUE (1) CONCENTRATION	(2) MASS	b. NO. OF ANALYSES
a. Bromide (24959-67-9)		X	< 0.5	< 18.0						mg/l	g/d			
b. Chlorine, Total Residual	X		0.05	0.0						mg/l	mg/d			
c. Color	X		7.0							units				
d. Fecal Coliform		X												
e. Fluoride (16984-48-8)	X		0.21	7.6						mg/l	g/d			
f. Nitrate-Nitrite (as N)	X		0.304	10.9						mg/l	g/d			

CONTINUE ON REVERSE

ITEM V-B CONTINUED FROM FRONT

1. POLLUTANT AND CAS NO. (if available)	2. MARK "X" a. PRESENT IN EFFLUENT	b. BELIEVED ABSENT	3. EFFLUENT a. MAXIMUM DAILY VALUE (1) CONCENTRATION	(2) MASS	b. MAXIMUM 30 DAY VALUE (if available) (1) CONCENTRATION	(2) MASS	c. LONG TERM AVRG. VALUE (if available) (1) CONCENTRATION	(2) MASS	d. NO. OF ANALYSES	4. UNITS a. CONCENTRATION	b. MASS	5. INTAKE (optional) a. LONG TERM AVERAGE VALUE (1) CONCENTRATION	(2) MASS	b. NO. OF ANALYSES
g. Nitrogen, Total Organic (as N)		X	< 0.5	< 18.0						mg/l	g/d			
h. Oil and Grease		X	< 1.05	< 37.8						mg/l	g/d			
i. Phosphorus (as P), Total (7723-14-0)	X		0.05	1.8						mg/l	g/d			
j. Radioactivity														
(1) Alpha, Total	X		0.1	3.6						pCi/l	nCi/d			
(2) Beta, Total	X		6.6	237.3						pCi/l	nCi/d			
(3) Radium, Total	X													
(4) Radium 226, Total	X		0.06	2.2						pCi/l	nCi/d			
k. Sulfate (as SO_4) (14808-79-8)	X		3.16	113.6						mg/l	g/d			
l. Sulfide (as S)		X		0.0						mg/l	mg/d			
m. Sulfite (as SO_3) (14265-45-3)		X	< 0.05	< 1.8						mg/l	g/d			
n. Surfactants		X	< 0.1	< 3.6						mg/l	g/d			
o. Aluminum, Total (7429-90-5)		X	< 0.04	< 1.4						mg/l	g/d			
p. Barium, Total (7440-39-3)	X		0.03	1.1						mg/l	g/d			
q. Boron, Total (7440-42-8)	X		0.02	0.7						mg/l	g/d			
r. Cobalt, Total (7440-48-4)		X	< 0.1	< 3.6						mg/l	g/d			
s. Iron, Total (7439-89-6)	X		0.41	14.7						mg/l	g/d			
t. Magnesium, Total (7439-95-4)	X		2.5	89.9						mg/l	g/d			
u. Molybdenum, Total (7439-98-7)		X	< 0.02	< 0.7						mg/l	g/d			
v. Manganese, Total (7439-96-5)	X		0.01	0.4						mg/l	g/d			
w. Tin, Total (7440-31-5)		X	< 0.050	< 1.8						mg/l	g/d			
x. Titanium, Total (7440-32-6)		X	< 0.004	< 0.1						mg/l	g/d			

CONTINUE ON PAGE V-3

EPA I.D. NUMBER (copy from Item 1 of Form 1)	OUTFALL NUMBER
NM0890010515	04A152

Form Approved.
OMB No. 2040-0086
Approval expires 7-31-88

CONTINUED FROM PAGE 3 OF FORM 2-C

PART C - If you are a primary industry and this outfall contains process wastewater, refer to Table 2c-2 in the instructions to determine which of the GC/MS fractions you must test for. Mark "X" in column 2-a for all such GC/MS fractions that apply to your industry and for ALL toxic metals, cyanides, and total phenols. If you are not required to mark column 2-a *(secondary industries, nonprocess wastewater outfalls, and non required GC/MS fractions)*, mark "X" in column 2-b for each pollutant you know or have reason to believe is present. Mark "X" in column 2-c for each pollutant you believe is absent. If you mark column 2a for any pollutant, you must provide the results of at least one analysis for that pollutant. If you mark column 2b for any pollutant, you must provide the results of at least one analysis for that pollutant if you know or have reason to believe it will be discharged in concentrations of 10 ppb or greater. If you mark column 2b for acrolein, acrylonitrile, 2,4 dinitrophenol, or 2-methyl-4, 6 dinitrophenol, you must provide the results of at least one analysis for each of these pollutants which you know or have reason to believe that you discharge in concentrations of 100 ppb or greater. Otherwise, for pollutants for which you mark column 2b, you must either submit at least one analysis or briefly describe the reasons the pollutant is expected to be discharged. Note that there are 7 pages to this part; please review each carefully. Complete one table *(all 7 pages)* for each outfall. See instructions for additional details and requirements.

1. POLLUTANT AND CAS NUMBER (If available)	2. MARK "X" a. TEST-ING REQUIRED	b. BELIEVED PRESENT	c. BELIEVED ABSENT	3. EFFLUENT a. MAXIMUM DAILY VALUE (1) CONCENTRATION	(2) MASS	b. MAXIMUM 30 DAY VALUE (if available) (1) CONCENTRATION	(2) MASS	c. LONG TERM AVRG. VALUE (if available) (1) CONCENTRATION	(2) MASS	d. NO. OF ANALYSES	4. UNITS a. CONCENTRATION	b. MASS	5. INTAKE (optional) a. LONG TERM AVERAGE VALUE (1) CONCENTRATION	(2) MASS	b. NO. OF ANALYSES
METALS, CYANIDE, AND TOTAL PHENOLS															
1M. Antimony, Total (7440-36-0)			X	< 0.050	< 1.8						mg/l	g/d			
2M. Arsenic, Total (7440-38-2)		X		0.002	71.9						mg/l	mg/d			
3M. Beryllium, Total, 7440-41-7)			X	< 0.001	< 36.0						mg/l	mg/d			
4M. Cadmium, Total (7440-43-9)			X	< 0.010	< 0.4						mg/l	g/d			
5M. Chromium, Total (7440-47-3)		X		0.040	1.4						mg/l	g/d			
6M. Copper, Total (7440-50-8)		X		0.031	1.1						mg/l	g/d			
7M. Lead, Total (7439-92-1)			X	< 0.050	< 1.8						mg/l	g/d			
8M. Mercury, Total (7439-97-6)			X	< 0.0002	< 7.2						mg/l	mg/d			
9M. Nickel, Total (7440-02-0)		X		0.06	2.2						mg/l	g/d			
10M. Selenium, Total (7782-49-2)			X	< 0.001	< 36.0						mg/l	mg/d			
11M. Silver, Total (7440-22-4)			X	< 0.010	< 0.4						mg/l	g/d			
12M. Thallium, Total (7440-28-0)			X	< 0.4	< 14.4						mg/l	g/d			
13M. Zinc, Total (7440-66-6)		X		0.043	1.5						mg/l	g/d			
14M. Cyanide, Total (57-12-5)			X	0.01	0.4						mg/l	g/d			
15M. Phenols, Total			X	< 0.01	< 0.4						mg/l	g/d			
DIOXIN															
2,3,7,8-Tetra-chlorodibenzo-P-Dioxin (1746-01-6)			X	DESCRIBE RESULTS											

CONTINUE ON REVERSE

CONTINUED FROM THE FRONT

1. POLLUTANT AND CAS NUMBER (if available)	2. MARK "X" a. Testing Required	b. Believed Present	c. Believed Absent	3. EFFLUENT a. MAXIMUM DAILY VALUE (1) Concentration	(2) Mass	b. MAXIMUM 30 DAY VALUE (if available) (1) Concentration	(2) Mass	c. LONG TERM AVRG. VALUE (if available) (1) Concentration	(2) Mass	d. NO. OF ANALYSES	4. UNITS a. CONCENTRATION	b. MASS	5. INTAKE (optional) a. LONG TERM AVERAGE VALUE (1) Concentration	(2) Mass	b. NO. OF ANALYSES
GC/MS FRACTION – VOLATILE COMPOUNDS															
V. Acrolein (107-02-8)			X												
V. Acrylonitrile (107-13-1)			X												
V. Benzene (71-43-2)			X	< 0.005	< 0.2						mg/l	g/d			
V. Bis (Chloromethyl) Ether (542-88-1)			X												
V. Bromoform (75-25-2)			X	< 0.005	< 0.2						mg/l	g/d			
V. Carbon Tetrachloride (56-23-5)			X	< 0.005	< 0.2						mg/l	g/d			
V. Chlorobenzene (108-90-7)			X	< 0.005	< 0.2						mg/l	g/d			
V. Chlorodibromomethane (124-48-1)			X	< 0.005	< 0.2						mg/l	g/d			
V. Chloroethane (75-00-3)			X	< 0.010	< 0.4						mg/l	g/d			
0V. 2-Chloroethylvinyl Ether (110-75-8)			X												
1V. Chloroform (67-66-3)			X	< 0.005	< 0.2						mg/l	g/d			
2V. Dichlorobromomethane (75-27-4)			X	< 0.005	< 0.2						mg/l	g/d			
3V. Dichlorodifluoromethane (75-71-8)			X												
4V. 1,1-Dichloroethane (75-34-3)			X	< 0.005	< 0.2						mg/l	g/d			
5V. 1,2-Dichloroethane (107-06-2)			X	< 0.005	< 0.2						mg/l	g/d			
6V. 1,1-Dichloroethylene (75-35-4)			X	< 0.005	< 0.2						mg/l	g/d			
7V. 1,2-Dichloropropane (78-87-5)			X	< 0.005	< 0.2						mg/l	kg/d			
8V. 1,3-Dichloropropylene (542-75-6)			X	<	< 0.0						mg/l	mg/d			
9V. Ethylbenzene (100-41-4)			X	< 0.005	< 0.2						mg/l	g/d			
0V. Methyl Bromide (74-83-9)			X	< 0.010	< 0.4						mg/l	g/d			
1V. Methyl Chloride (74-87-3)			X	< 0.010	< 0.4						mg/l	g/d			

CONTINUE ON PAGE V-5

CONTINUED FROM PAGE V-4

EPA I.D. NUMBER (copy from Item 1 of Form 1): NM0890010515

OUTFALL NUMBER: 04A152

OMB No. 2040-0086
Approval expires 7-31-88

1. POLLUTANT AND CAS NUMBER (if available)	2. MARK "X" a. Believed Present	b. Believed Absent	c. Analyzed	3. EFFLUENT a. MAXIMUM DAILY VALUE (1) Concentration	(2) Mass	b. MAXIMUM 30 DAY VALUE (if available) (1) Concentration	(2) Mass	c. LONG TERM AVRG. VALUE (if available) (1) Concentration	(2) Mass	d. NO. OF ANALYSES	4. UNITS a. CONCENTRATION	b. MASS	5. INTAKE (optional) a. LONG TERM AVERAGE VALUE (1) Concentration	(2) Mass	b. NO. OF ANALYSES
GC/MS FRACTION — VOLATILE COMPOUNDS (continued)															
22V. Methylene Chloride (75-09-2)			X	< 0.005	< 0.2						mg/l	g/d			
23V. 1,1,2,2-Tetrachloroethane (79-34-5)			X	< 0.005	< 0.2						mg/l	g/d			
24V. Tetrachloroethylene (127-18-4)			X	< 0.005	< 0.2						mg/l	g/d			
25V. Toluene (108-88-3)			X	< 0.005	< 0.2						mg/l	g/d			
26V. 1,2-Trans-Dichloroethylene (156-60-5)			X	< 0.005	< 0.2						mg/l	g/d			
27V. 1,1,1-Trichloroethane (71-55-6)			X	< 0.005	< 0.2						mg/l	g/d			
28V. 1,1,2-Trichloroethane (79-00-5)			X	< 0.005	< 0.2						mg/l	g/d			
29V. Trichloroethylene (79-01-6)			X	< 0.005	< 0.2						mg/l	g/d			
30V. Trichlorofluoromethane (75-69-4)			X	< 0.005	< 0.2						mg/l	g/d			
31V. Vinyl Chloride (75-01-4)			X	< 0.010	< 0.4						mg/l	g/d			
GC/MS FRACTION — ACID COMPOUNDS															
1A. 2-Chlorophenol (95-57-8)			X	< 0.010	< 0.4						mg/l	g/d			
2A. 2,4-Dichlorophenol (120-83-2)			X	< 0.010	< 0.4						mg/l	g/d			
3A. 2,4-Dimethylphenol (105-67-9)			X	< 0.010	< 0.4						mg/l	g/d			
4A. 4,6-Dinitro-O-Cresol (534-52-1)			X	< 0.010	< 0.4						mg/l	g/d			
5A. 2,4-Dinitrophenol (51-28-5)			X	< 0.010	< 0.4						mg/l	g/d			
6A. 2 Nitrophenol (88-75-5)			X	< 0.010	< 0.4						mg/l	g/d			
7A. 4-Nitrophenol (100-02-7)			X	< 0.010	< 0.4						mg/l	g/d			
8A. P Chloro M-Cresol (59-50-7)			X	< 0.010	< 0.4						mg/l	g/d			
9A. Pentachlorophenol (87-86-5)			X	< 0.010	< 0.4						mg/l	g/d			
10A. Phenol (108-95-2)			X	< 0.010	< 0.4						mg/l	g/d			
11A. 2,4,6-Trichlorophenol (88-06-2)			X	< 0.010	< 0.4						mg/l	g/d			

CONTINUE ON REVERSE

CONTINUED FROM THE FRONT

1. POLLUTANT AND CAS NUMBER (if available)	2. MARK "X" a. Believed present	b. Believed absent	c. Analyzed but not detected	3. EFFLUENT a. MAXIMUM DAILY VALUE (1) concentration	(2) mass	b. MAXIMUM 30 DAY VALUE (if available) (1) concentration	(2) mass	c. LONG TERM AVRG. VALUE (if available) (1) concentration	(2) mass	d. NO. OF ANALYSES	4. UNITS a. CONCENTRATION	b. MASS	5. INTAKE (optional) a. LONG TERM AVERAGE VALUE (1) concentration	(2) mass	b. NO. OF ANALYSES
GC/MS FRACTION — BASE/NEUTRAL COMPOUNDS															
1B. Acenaphthene (83-32-9)			X	< 0.010	< 0.4						mg/l	mg/d			
2B. Acenaphthylene (208-96-8)			X	< 0.010	< 0.4						mg/l	mg/d			
3B. Anthracene (120-12-7)			X	< 0.010	< 0.4						mg/l	mg/d			
4B. Benzidine (92-87-5)			X	< 0.010	< 0.4						mg/l	mg/d			
5B. Benzo (a) Anthracene (56-55-3)			X	< 0.010	< 0.4						mg/l	mg/d			
6B. Benzo (a) Pyrene (50-32-8)			X	< 0.010	< 0.4						mg/l	mg/d			
7B. 3,4-Benzo-fluoranthene (205-99-2)			X	< 0.010	< 0.4						mg/l	mg/d			
8B. Benzo (ghi) Perylene (191-24-2)			X	< 0.010	< 0.4						mg/l	mg/d			
9B. Benzo (k) Fluoranthene (207-08-9)			X	< 0.010	< 0.4						mg/l	mg/d			
10B. Bis (2-Chloro-ethoxy) Methane (111-91-1)			X	< 0.010	< 0.4						mg/l	mg/d			
11B. Bis (2-Chloro-ethyl) Ether (111-44-4)			X	< 0.010	< 0.4						mg/l	mg/d			
12B. Bis (2-Chloro-propyl) Ether (102-80-1)			X	< 0.010	< 0.4						mg/l	mg/d			
13B. Bis (2-Ethyl-hexyl) Phthalate (117-81-7)			X	< 0.010	< 0.4						mg/l	mg/d			
14B. 4-Bromo-phenyl Phenyl Ether (101-55-3)			X	< 0.010	< 0.4						mg/l	mg/d			
15B. Butyl Benzyl Phthalate (85-68-7)			X	< 0.010	< 0.4						mg/l	mg/d			
16B. 2-Chloro-naphthalene (91-58-7)			X	< 0.010	< 0.4						mg/l	mg/d			
17B. 4-Chloro-phenyl Phenyl Ether (7005-72-3)			X	< 0.010	< 0.4						mg/l	mg/d			
18B. Chrysene (218-01-9)			X	< 0.010	< 0.4						mg/l	mg/d			
19B. Dibenzo (a,h) Anthracene (53-70-3)			X	< 0.010	< 0.4						mg/l	mg/d			
20B. 1,2-Dichloro-benzene (95-50-1)			X	< 0.010	< 0.4						mg/l	mg/d			
21B. 1,3-Dichloro-benzene (541-73-1)			X	< 0.010	< 0.4						mg/l	g/d			

CONTINUE ON PAGE V-7

CONTINUED FROM PAGE V-6

EPA I.D. NUMBER (copy from Item 1 of Form 1): NM0890010515
OUTFALL NUMBER: 04A152

OMB No. 2040-0086
Approval expires 7-31-88

1. POLLUTANT AND CAS NUMBER (if available)	2. MARK "X" a. Test and Believed Present	b. Believed Present	c. Believed Absent	3. EFFLUENT a. MAXIMUM DAILY VALUE (1) Concentration	(2) Mass	b. MAXIMUM 30 DAY VALUE (if available) (1) Concentration	(2) Mass	c. LONG TERM AVRG. VALUE (if available) (1) Concentration	(2) Mass	d. NO. OF ANALYSES	4. UNITS a. CONCENTRATION	b. MASS	5. INTAKE (optional) a. LONG TERM AVERAGE VALUE (1) Concentration	(2) Mass	b. NO. OF ANALYSES
GC/MS FRACTION – BASE/NEUTRAL COMPOUNDS (continued)															
228. 1,4-Dichlorobenzene (106-46-7)			X	< 0.010	< 0.4						mg/l	mg/d			
238. 3,3'-Dichlorobenzidine (91-94-1)			X	< 0.010	< 0.4						mg/l	mg/d			
248. Diethyl Phthalate (84-66-2)			X	< 0.010	< 0.4						mg/l	mg/d			
258. Dimethyl Phthalate (131-11-3)			X	< 0.010	< 0.0						mg/l	mg/d			
268. Di-N-Butyl Phthalate (84-74-2)			X	< 0.010	< 0.4						mg/l	mg/d			
278. 2,4-Dinitrotoluene (121-14-2)			X	< 0.010	< 0.4						mg/l	mg/d			
288. 2,6-Dinitrotoluene (606-20-2)			X	< 0.010	< 0.4						mg/l	mg/d			
298. Di-N-Octyl Phthalate (117-84-0)			X	< 0.010	< 0.4						mg/l	mg/d			
308. 1,2-Diphenylhydrazine (or Azobenzene) (122-66-7)			X	< 0.010	< 0.4						mg/l	mg/d			
318. Fluoranthene (206-44-0)			X	< 0.010	< 0.4						mg/l	mg/d			
328. Fluorene (86-73-7)			X	< 0.010	< 0.4						mg/l	g/d			
338. Hexachlorobenzene (118-74-1)			X	< 0.010	< 0.4						mg/l	mg/d			
348. Hexachlorobutadiene (87-68-3)			X	< 0.010	< 0.4						mg/l	mg/d			
358. Hexachlorocyclopentadiene (77-47-4)			X	< 0.010	< 0.4						mg/l	mg/d			
368. Hexachloroethane (67-72-1)			X	< 0.010	< 0.4						mg/l	mg/d			
378. Indeno (1,2,3-cd) Pyrene (193-39-5)			X	< 0.010	< 0.4						mg/l	mg/d			
388. Isophorone (78-59-1)			X	< 0.010	< 0.4						mg/l	mg/d			
398. Naphthalene (91-20-3)			X	< 0.010	< 0.4						mg/l	mg/d			
408. Nitrobenzene (98-95-3)			X	< 0.010	< 0.4						mg/l	mg/d			
418. N-Nitrosodimethylamine (62-75-9)			X	< 0.010	< 0.4						mg/l	mg/d			
428. N-Nitrosodi-N-Propylamine (621-64-7)			X	< 0.010	< 0.4						mg/l	g/d			

CONTINUE ON REVERSE

CONTINUED FROM THE FRONT

1. POLLUTANT AND CAS NUMBER (if available)	2. MARK "X" a. Believed present	b. Believed absent	c. Analytical data in lieu	3. EFFLUENT a. MAXIMUM DAILY VALUE (1) concentration	(2) mass	b. MAXIMUM 30 DAY VALUE (if available) (1) concentration	(2) mass	c. LONG TERM AVRG. VALUE (if available) (1) concentration	(2) mass	d. NO. OF ANALYSES	4. UNITS a. CONCENTRATION	b. MASS	5. INTAKE (optional) a. LONG TERM AVERAGE VALUE (1) concentration	(2) mass	b. NO. OF ANALYSES
GC/MS FRACTION – BASE/NEUTRAL COMPOUNDS (continued)															
38. N-Nitrosodiphenylamine (86-30-6)			X	< 0.010	< 0.4						mg/l	mg/d			
39. Phenanthrene (85-01-8)			X	< 0.010	< 0.4						mg/l	mg/d			
40. Pyrene (129-00-0)			X	< 0.010	< 0.4						mg/l	mg/d			
41. 1,2,4-Trichlorobenzene (120-82-1)			X	< 0.010	< 0.4						mg/l	mg/d			
GC/MS FRACTION – PESTICIDES															
42. Aldrin (309-00-2)			X	< 0.06	< 2.2						ug/l	ug/d			
43. α-BHC (319-84-6)			X	< 0.02	< 0.7						ug/l	ug/d			
44. β-BHC (319-85-7)			X	< 0.1	< 3.6						ug/l	ug/d			
45. γ-BHC (58-89-9)			X	< 0.03	< 1.1						ug/l	ug/d			
46. δ-BHC (319-86-8)			X	< 0.12	< 4.3						ug/l	ug/d			
47. Chlordane (57-74-9)			X	< 0.25	< 9.0						ug/l	ug/d			
48. 4,4'-DDT (50-29-3)			X	< 0.06	< 2.2						ug/l	ug/d			
49. 4,4'-DDE (72-55-9)			X	< 0.08	< 2.9						ug/l	ug/d			
50. 4,4'-DDD (72-54-8)			X	< 0.08	< 2.9						ug/l	ug/d			
51. Dieldrin (60-57-1)			X	< 0.08	< 2.9						ug/l	ug/d			
52. α-Endosulfan (115-29-7)			X	< 0.05	< 1.8						ug/l	ug/d			
53. β-Endosulfan (115-29-7)			X	< 0.08	< 2.9						ug/l	ug/d			
54. Endosulfan sulfate (1031-07-8)			X	< 0.09	< 3.2						ug/l	ug/d			
55. Endrin (72-20-8)			X	< 0.06	< 2.2						ug/l	ug/d			
56. Endrin aldehyde (7421-93-4)			X	< 0.62	< 22.3						ug/l	ug/d			
57. Heptachlor (76-44-8)			X	< 0.3	< 10.8						ug/l	mg/d			

CONTINUE ON PAGE V-9

CONTINUED FROM PAGE V-8

EPA I.D. NUMBER (copy from Item 1 of Form 1)	OUTFALL NUMBER
NM0890010515	04A152

Form Approved.
OMB No. 2040-0055
Approval expires 7-31-88

1. POLLUTANT AND CAS NUMBER (if available)	2. MARK "X" a. Test and Quantify	b. Believed Present	c. Believed Absent	3. EFFLUENT a. MAXIMUM DAILY VALUE (1) Concentration	(2) Mass	b. MAXIMUM 30 DAY VALUE (if available) (1) Concentration	(2) Mass	c. LONG TERM AVRG. VALUE (if available) (1) Concentration	(2) Mass	d. NO. OF ANALYSES	4. UNITS a. CONCENTRATION	b. MASS	5. INTAKE (optional) a. LONG TERM AVERAGE VALUE (1) Concentration	(2) Mass	b. NO. OF ANALYSES
GC/MS FRACTION — PESTICIDES (continued)															
17P. Heptachlor Epoxide (1024-57-3)			X	< 0.04	< 1.4						ug/l	ug/d			
18P. PCB-1242 (53469-21-9)			X	< 0.68	< 24.5						ug/l	ug/d			
19P. PCB-1254 (11097-69-1)			X	< 0.68	< 24.5						ug/l	ug/d			
20P. PCB-1221 (11104-28-2)			X	N.D.											
21P. PCB-1232 (11141-16-5)			X	N.D.											
22P. PCB-1248 (12672-29-6)			X	N.D.											
23P. PCB-1260 (11096-82-5)			X	< 0.68	< 24.5						ug/l	ug/d			
24P. PCB-1016 (12674-11-2)			X	N.D.											
25P. Toxaphene (8001-35-2)			X	< 2.5	< 89.9						ug/l	mg/d			

Please type or print in the unshaded areas only	EPA ID Number (copy from Item 1 of Form 1) NM0890010515	Form Approved OMB No. 2040-0086 Approval expires 7-31-88

Form 2D NPDES

EPA New Sources and New Dischargers Application for Permit to Discharge Process Wastewater

I. Outfall Location

For each outfall, list the latitude and longitude, and the name of the receiving water.

Outfall Number (list)	Latitude Deg	Latitude Min	Latitude Sec	Longitude Deg	Longitude Min	Longitude Sec	Receiving Water (name)
48-8-OPN-1	35	51	58	106	18	21	Tributary to Mortandad Canyon, and ephemeral tributary to the Rio Grande

II. Discharge Date (When do you expect to begin discharging?)

Active discharge noted during waste stream characterization.

III. Flows, Sources of Pollution, and Treatment Technologies

A. For each outfall, provide a description of (1) All operations contributing wastewater to the effluent, including process wastewater, sanitary wastewater, cooling water, and stormwater runoff; (2) The average flow contributed by each operation; and (3) The treatment received by the wastewater. Continue on additional sheets if necessary.

Outfall Number	1. Operations Contributing Flow (list)	2. Average Flow (include units)	3. Treatment (Description or List Codes from Table 2D-1)
48-8-OPN-1	Water fountain	5 GPD	None

B. Attach a line drawing showing the water flow through the facility. Indicate sources of intake water, operations contributing wastewater to the effluent, and treatment units labeled to correspond to the more detailed descriptions in Item III-A. Construct a water balance on the line drawing by showing average flows between intakes, operations, treatment units, and outfalls. If a water balance cannot be determined (e.g., for certain mining activities), provide a pictorial description of the nature and amount of any sources of water and any collection or treatment measures.

C. Except for storm runoff, leaks, or spills, will any of the discharges described in Item III-A be intermittent or seasonal?

☒ Yes (complete the following table) ☐ No (go to item IV)

Outfall Number	1. Frequency		2. Flow		
	a. Days Per Week (specify average)	b. Months Per Year (specify average)	a. Maximum Daily Flow Rate (in mgd)	b. Maximum Total Volume (specify with units)	c. Duration (in days)
48-8-OPN-1	5	12	0.000005	5 GPD	260 day/yr

IV. Production

If there is an applicable production-based effluent guideline or NSPS, for each outfall list the estimated level of production (projection of actual production level, not design), expressed in the terms and units used in the applicable effluent guideline or NSPS, for each of the first 3 years of operation. If production is likely to vary, you may also submit alternative estimates (attach a separate sheet).

Year	a. Quantity Per Day	b. Units of Measure	c. Operation, Product, Material, etc (specify)
			N/A

CONTINUE ON NEXT PAGE

CONTINUED FROM THE FRONT	EPA ID Number (copy from Item 1 of Form 1) NM0890010515	Outfall Number 48-8-OPN-1

V Effluent Characteristics

A, and B: These items require you to report estimated amounts *(both concentration and mass)* of the pollutants to be discharged from each of your outfalls. Each part of this item addresses a different set of pollutants and should be completed in accordance with the specific instructions for that part. Data for each outfall should be on a separate page. Attach additional sheets of paper if necessary.

General Instructions *(See table 2D-2 for Pollutants)*

Each part of this item requests you to provide an estimated daily maximum and average for certain pollutants and the source of information. Data for all pollutants in Group A, for all outfalls, must be submitted unless waived by the permitting authority. For all outfalls, data for pollutants in Group B should be reported only for pollutants which you believe will be present or are limited directly by an effluent limitations guideline or NSPS or indirectly through limitations on an indicator pollutant.

1. Pollutant	2. Maximum Daily Value *(include units)*	3. Average Daily Value *(include units)*	4. Source *(see instructions)*
See attached 04A datasheets			Best professional estimates

CONTINUED FROM THE FRONT	EPA ID Number (copy from Item 1 of Form 1) NM0890010515	

C. Use the space below to list any of the pollutants listed in Table 2D-3 of the instructions which you know or have reason to believe will be discharged from any outfall. For every pollutant you list, briefly describe the reasons you believe it will be present.

1. Pollutant	2. Reason for Discharge
N/A	

VI. Engineering Report on Wastewater Treatment

A. If there is any technical evaluation concerning your wastewater treatment, including engineering reports or pilot plant studies, check the appropriate box below.

☒ Report Available ☐ No Report Waste Stream Characterization Report #76

B. Provide the name and location of any existing plant(s) which, to the best of your knowledge, resembles this production facility with respect to production processes, wastewater constituents, or wastewater treatments.

Name	Location
N/A	

CONTINUE ON NEXT PAGE

EPA ID Number (copy from Item one of Form 1)
NM0890010515

VII. Other Information (Optional)

Use the space below to expand upon any of the above questions or to bring to the attention of the reviewer any other information you feel should be considered in establishing permit limitations for the proposed facility. Attach additional sheets if necessary.

See attached 04A datasheets and line drawing. Discharge is consistent with potable water.

VIII. Certification

I certify under penalty of law that this document and all attachments were prepared under my direction or supervision in accordance with a system designed to assure that qualified personnel properly gather and evaluate the information submitted. Based on my inquiry of the person or persons who manage the system, or those persons directly responsible for gathering the information, the information submitted is, to the best of my knowledge and belief, true, accurate, and complete. I am aware that there are significant penalties for submitting false information, including the possibility of fine and imprisonment for knowing violations.

A. Name and Official Title (type or print)	B. Phone No.
JERRY L. BELLOWS, AREA MANAGER, DOE	505-667-5105
ALLEN J. TIEDMAN, ASSOC. DIRECTOR FOR OPERATIONS	505-667-9390
C. Signature	D. Date Signed

•U.S. Government Printing Office : 1986 : 491-191/33910

Data from worst case composite.

PLEASE PRINT OR TYPE IN THE UNSHADED AREAS ONLY. You may report some or all of this information on separate sheets (use the same format) instead of completing these pages. SEE INSTRUCTIONS.

EPA I.D. NUMBER (copy from Item 1 of Form 1): NM0890010515

Form Approved. OMB No. 2040-0086 Approval expires 7-31-89

V. INTAKE AND EFFLUENT CHARACTERISTICS (continued from page 3 of Form 2-C)

OUTFALL NO. 04A

PART A - You must provide the results of at least one analysis for every pollutant in this table. Complete one table for each outfall. See instructions for additional details.

1. POLLUTANT	2. EFFLUENT a. MAXIMUM DAILY VALUE (1) CONCENTRATION	(2) MASS	b. MAXIMUM 30 DAY VALUE (if available) (1) CONCENTRATION	(2) MASS	c. LONG TERM AVRG. VALUE (if available) (1) CONCENTRATION	(2) MASS	d. NO. OF ANALYSES	3. UNITS (specify if blank) a. CONCENTRATION	b. MASS	4. INTAKE (optional) a. LONG TERM AVERAGE VALUE (1) CONCENTRATION	(2) MASS	b. NO. OF ANALYSES
a. Biochemical Oxygen Demand (BOD)	< 2.0	< 37.9						mg/l	g/d			
b. Chemical Oxygen Demand (COD)	< 10.0	< 0.2						mg/l	g/d			
c. Total Organic Carbon (TOC)	0.6	11.2						mg/l	g/d			
d. Total Suspended Solids (TSS)	18.0	0.3						mg/l	g/d			
e. Ammonia (as N)	< 0.1	< 1.893						mg/l	g/d			
f. Flow	VALUE 5		VALUE		VALUE			gal/day		VALUE		
g. Temperature (winter)	VALUE 13.9		VALUE		VALUE			°C		VALUE		
h. Temperature (summer)	VALUE N/A		VALUE		VALUE			°C		VALUE		
i. pH	MINIMUM 8.45	MAXIMUM 8.80	MINIMUM	MAXIMUM				STANDARD UNITS				

PART B - Mark "X" in column 2-a for each pollutant you know or have reason to believe is present. Mark "X" in column 2-b for each pollutant you believe to be absent. If you mark column 2a for any pollutant which is limited either directly, or indirectly but expressly, in an effluent limitations guideline, you must provide the results of at least one analysis for that pollutant. For other pollutants for which you mark column 2a, you must provide quantitative data or an explanation of their presence in your discharge. Complete one table for each outfall. See the instructions for additional details and requirements.

1. POLLUTANT AND CAS NO. (if available)	2. MARK "X" a. BELIEVED PRESENT	b. BELIEVED ABSENT	3. EFFLUENT a. MAXIMUM DAILY VALUE (1) CONCENTRATION	(2) MASS	b. MAXIMUM 30 DAY VALUE (if available) (1) CONCENTRATION	(2) MASS	c. LONG TERM AVRG. VALUE (if available) (1) CONCENTRATION	(2) MASS	d. NO. OF ANALYSES	4. UNITS a. CONCENTRATION	b. MASS	5. INTAKE (optional) a. LONG TERM AVERAGE VALUE (1) CONCENTRATION	(2) MASS	b. NO. OF ANALYSES
a. Bromide (24959-67-9)			< 0.5	< 9.5						mg/l	g/d			
b. Chlorine, Total Residual	X		0.05	0.0						mg/l	mg/d			
c. Color	X		7.0							units				
d. Fecal Coliform		X												
e. Fluoride (16984-48-8)	X		0.21	4.0						mg/l	g/d			
f. Nitrate-Nitrite (as N)	X		0.304	5.8						mg/l	g/d			

CONTINUE ON REVERSE

ITEM V-B CONTINUED FROM FRONT

1. POLLUTANT AND CAS NO. (if available)	2. MARK "X" a. PRESENT	b. ABSENT	3. EFFLUENT a. MAXIMUM DAILY VALUE (1) CONCENTRATION	(2) MASS	b. MAXIMUM 30 DAY VALUE (if available) (1) CONCENTRATION	(2) MASS	c. LONG TERM AVRG. VALUE (if available) (1) CONCENTRATION	(2) MASS	d. NO. OF ANALYSES	4. UNITS a. CONCENTRATION	b. MASS	5. INTAKE (optional) a. LONG TERM AVERAGE VALUE (1) CONCENTRATION	(2) MASS	b. NO. OF ANALYSES
g. Nitrogen, Total Organic (as N)		X	< 0.5	< 9.5						mg/l	mg/d			
h. Oil and Grease		X	< 1.05	< 19.9						mg/l	mg/d			
i. Phosphorus (as P), Total (7723-14-0)	X		0.05	0.9						mg/l	mg/d			
j. Radioactivity														
(1) Alpha, Total	X		0.1	1.9						pCi/l	pCi/d			
(2) Beta, Total	X		6.6	0.1						pCi/l	nCi/d			
(3) Radium, Total	X													
(4) Radium 226, Total	X		0.06	1.1						pCi/l	pCi/d			
k. Sulfate (as SO_4) (14808-79-8)	X		3.16	59.8						mg/l	mg/d			
l. Sulfide (as S)		X		0.0						mg/l	mg/d			
m. Sulfite (as SO_3) (14265-45-3)		X	< 0.05	< 0.9						mg/l	mg/d			
n. Surfactants		X	< 0.1	< 1.9						mg/l	mg/d			
o. Aluminum, Total (7429-90-5)		X	< 0.04	< 0.8						mg/l	mg/d			
p. Barium, Total (7440-39-3)	X		0.03	0.6						mg/l	mg/d			
q. Boron, Total (7440-42-8)	X		0.02	0.4						mg/l	mg/d			
r. Cobalt, Total (7440-48-4)		X	< 0.1	< 1.9						mg/l	mg/d			
s. Iron, Total (7439-89-6)	X		0.41	7.8						mg/l	mg/d			
t. Magnesium, Total (7439-96-4)	X		2.5	47.3						mg/l	mg/d			
u. Molybdenum, Total (7439-98-7)		X	< 0.02	< 0.4						mg/l	mg/d			
v. Manganese, Total (7439-96-5)	X		0.01	0.2						mg/l	mg/d			
w. Tin, Total (7440-31-5)		X	< 0.050	< 0.9						mg/l	mg/d			
x. Titanium, Total (7440-32-6)		X	< 0.004	< 0.1						mg/l	mg/d			

CONTINUE ON PAGE V-3

EPA I.D. NUMBER (copy from Item 1 of Form 1)	OUTFALL NUMBER
NM0890010515	04A

Form Approved.
OMB No. 2040-0086
Approval expires 7-31-88

CONTINUED FROM PAGE 3 OF FORM 2-C

PART C – If you are a primary industry and this outfall contains process wastewater, refer to Table 2c-2 in the instructions to determine which of the GC/MS fractions you must test for. Mark "X" in column 2-a for all such GC/MS fractions that apply to your industry and for ALL toxic metals, cyanides, and total phenols. If you are not required to mark column 2-a *(secondary industries, nonprocess wastewater outfalls, and non-required GC/MS fractions)*, mark "X" in column 2-b for each pollutant you know or have reason to believe is present. Mark "X" in column 2-c for each pollutant you believe is absent. If you mark column 2a for any pollutant, you must provide the results of at least one analysis for that pollutant. If you mark column 2b for any pollutant, you must provide the results of at least one analysis for that pollutant if you know or have reason to believe it will be discharged in concentrations of 10 ppb or greater. If you mark column 2b for acrolein, acrylonitrile, 2,4 dinitrophenol, or 2-methyl-4, 6 dinitrophenol, you must provide the results of at least one analysis for each of these pollutants which you know or have reason to believe that you discharge in concentrations of 100 ppb or greater. Otherwise, for pollutants for which you mark column 2b, you must either submit at least one analysis or briefly describe the reasons the pollutant is expected to be discharged. Note that there are 7 pages to this part; please review each carefully. Complete one table *(all 7 pages)* for each outfall. See instructions for additional details and requirements.

1. POLLUTANT AND CAS NUMBER (If available)	2. MARK "X" a. Testing Required	b. Believed Present	c. Believed Absent	3. EFFLUENT a. MAXIMUM DAILY VALUE (1) Concentration	(2) Mass	b. MAXIMUM 30 DAY VALUE (if available) (1) Concentration	(2) Mass	c. LONG TERM AVRG. VALUE (if available) (1) Concentration	(2) Mass	d. NO. OF ANALYSES	4. UNITS a. Concentration	b. Mass	5. INTAKE (optional) a. LONG TERM AVERAGE VALUE (1) Concentration	(2) Mass	b. NO. OF ANALYSES
METALS, CYANIDE, AND TOTAL PHENOLS															
1M. Antimony, Total (7440-36-0)			X	< 0.050	< 0.9						mg/l	mg/d			
2M. Arsenic, Total (7440-38-2)		X		0.002	0.0						mg/l	mg/d			
3M. Beryllium, Total, 7440-41-7)			X	< 0.001	< 0.0						mg/l	mg/d			
4M. Cadmium, Total (7440-43-9)			X	< 0.010	< 0.2						mg/l	mg/d			
5M. Chromium, Total (7440-47-3)		X		0.040	0.8						mg/l	mg/d			
6M. Copper, Total (7440-50-8)		X		0.031	0.6						mg/l	mg/d			
7M. Lead, Total (7439-92-1)			X	< 0.050	< 0.9						mg/l	mg/d			
8M. Mercury, Total (7439-97-6)			X	< 0.0002	< 0.00						mg/l	mg/d			
9M. Nickel, Total (7440-02-0)		X		0.06	1.1						mg/l	mg/d			
10M. Selenium, Total (7782-49-2)			X	< 0.001	< 0.0						mg/l	mg/d			
11M. Silver, Total (7440-22-4)			X	< 0.010	< 0.2						mg/l	mg/d			
12M. Thallium, Total (7440-28-0)			X	< 0.4	< 7.6						mg/l	mg/d			
13M. Zinc, Total (7440-66-6)		X		0.043	0.8						mg/l	mg/d			
14M. Cyanide, Total (57-12-5)			X	0.01	0.2						mg/l	mg/d			
15M. Phenols, Total			X	< 0.01	< 0.2						mg/l	mg/d			
DIOXIN															
2,3,7,8-Tetrachlorodibenzo-P-Dioxin (1764-01-6)			X	DESCRIBE RESULTS											

CONTINUE ON REVERSE

1. POLLUTANT AND CAS NUMBER (if available)	2. MARK "X"			3. EFFLUENT							4. UNITS		5. INTAKE (optional)		
	a. TEST INCLUDED	b. BELIEVED PRESENT	c. BELIEVED ABSENT	a. MAXIMUM DAILY VALUE		b. MAXIMUM 30 DAY VALUE (if available)		c. LONG TERM AVRG. VALUE (if available)		d. NO. OF ANALYSES	a. CONCENTRATION	b. MASS	a. LONG TERM AVERAGE VALUE		b. NO. OF ANALYSES
				(1) CONCENTRATION	(2) MASS	(1) CONCENTRATION	(2) MASS	(1) CONCENTRATION	(2) MASS				(1) CONCENTRATION	(2) MASS	
GC/MS FRACTION – VOLATILE COMPOUNDS															
1V. Acrolein (107-02-8)			X												
2V. Acrylonitrile (107-13-1)			X												
3V. Benzene (71-43-2)			X	< 0.005	< 0.1						mg/l	mg/d			
4V. Bis (Chloromethyl) Ether (542-88-1)			X												
5V. Bromoform (75-25-2)			X	< 0.005	< 0.1						mg/l	mg/d			
6V. Carbon Tetrachloride (56-23-5)			X	< 0.005	< 0.1						mg/l	mg/d			
7V. Chlorobenzene (108-90-7)			X	< 0.005	< 0.1						mg/l	mg/d			
8V. Chlorodibromomethane (124-48-1)			X	< 0.005	< 0.1						mg/l	mg/d			
9V. Chloroethane (75-00-3)			X	< 0.010	< 0.000						mg/l	mg/d			
10V. 2-Chloroethylvinyl Ether (110-75-8)			X												
11V. Chloroform (67-66-3)			X	< 0.005	< 0.1						mg/l	mg/d			
12V. Dichlorobromomethane (75-27-4)			X	< 0.005	< 0.1						mg/l	mg/d			
13V. Dichlorodifluoromethane (75-71-8)			X												
14V. 1,1-Dichloroethane (75-34-3)			X	< 0.005	< 0.1						mg/l	mg/d			
15V. 1,2-Dichloroethane (107-06-2)			X	< 0.005	< 0.1						mg/l	mg/d			
16V. 1,1-Dichloroethylene (75-35-4)			X	< 0.005	< 0.1						mg/l	mg/d			
17V. 1,2-Dichloropropane (78-87-5)			X	< 0.005	< 0.1						mg/l	kg/d			
18V. 1,3-Dichloropropylene (542-75-6)			X	<	< 0.0						mg/l	mg/d			
19V. Ethylbenzene (100-41-4)			X	< 0.005	< 0.1						mg/l	mg/d			
20V. Methyl Bromide (74-83-9)			X	< 0.010	< 0.2						mg/l	mg/d			
21V. Methyl Chloride (74-87-3)			X	< 0.010	< 0.2						mg/l	mg/d			

CONTINUE ON PAGE V-5

NM0890010515 | 04A | Approval expires 7-31-88

1. POLLUTANT AND CAS NUMBER (if available)	2. MARK "X" a. Testing Required	b. Believed Present	c. Believed Absent	3. EFFLUENT a. MAXIMUM DAILY VALUE (1) Concentration	(2) Mass	b. MAXIMUM 30 DAY VALUE (if available) (1) Concentration	(2) Mass	c. LONG TERM AVRG. VALUE (if available) (1) Concentration	(2) Mass	d. NO. OF ANALYSES	4. UNITS a. CONCENTRATION	b. MASS	5. INTAKE (optional) a. LONG TERM AVERAGE VALUE (1) Concentration	(2) Mass	b. NO. OF ANALYSES
GC/MS FRACTION — VOLATILE COMPOUNDS (continued)															
22V. Methylene Chloride (75-09-2)			X	< 0.005	< 0.1						mg/l	mg/d			
23V. 1,1,2,2-Tetrachloroethane (79-34-5)			X	< 0.005	< 0.1						mg/l	mg/d			
24V. Tetrachloroethylene (127-18-4)			X	< 0.005	< 0.1						mg/l	mg/d			
25V. Toluene (108-88-3)			X	< 0.005	< 0.1						mg/l	mg/d			
26V. 1,2-Trans-Dichloroethylene (156-60-5)			X	< 0.005	< 0.1						mg/l	mg/d			
27V. 1,1,1-Trichloroethane (71-55-6)			X	< 0.005	< 0.1						mg/l	mg/d			
28V. 1,1,2-Trichloroethane (79-00-5)			X	< 0.005	< 0.1						mg/l	mg/d			
29V. Trichloroethylene (79-01-6)			X	< 0.005	< 0.1						mg/l	mg/d			
30V. Trichlorofluoromethane (75-69-4)			X	< 0.005	< 0.1						mg/l	mg/d			
31V. Vinyl Chloride (75-01-4)			X	< 0.010	< 0.2						mg/l	mg/d			
GC/MS FRACTION — ACID COMPOUNDS															
1A. 2-Chlorophenol (95-57-8)			X	< 0.010	< 0.2						mg/l	mg/d			
2A. 2,4-Dichlorophenol (120-83-2)			X	< 0.010	< 0.2						mg/l	mg/d			
3A. 2,4-Dimethylphenol (105-67-9)			X	< 0.010	< 0.2						mg/l	mg/d			
4A. 4,6-Dinitro-O-Cresol (534-52-1)			X	< 0.010	< 0.2						mg/l	mg/d			
5A. 2,4-Dinitrophenol (51-28-5)			X	< 0.010	< 0.2						mg/l	mg/d			
6A. 2-Nitrophenol (88-75-5)			X	< 0.010	< 0.2						mg/l	mg/d			
7A. 4-Nitrophenol (100-02-7)			X	< 0.010	< 0.2						mg/l	mg/d			
8A. P-Chloro-M-Cresol (59-50-7)			X	< 0.010	< 0.2						mg/l	mg/d			
9A. Pentachlorophenol (87-86-5)			X	< 0.010	< 0.2						mg/l	mg/d			
10A. Phenol (108-95-2)			X	< 0.010	< 0.2						mg/l	mg/d			
11A. 2,4,6-Trichlorophenol (88-06-2)			X	< 0.010	< 0.2						mg/l	mg/d			

CONTINUE ON REVERSE

CONTINUED FROM THE FRONT

1. POLLUTANT AND CAS NUMBER (if available)	2. MARK "X" a. Testing Required	b. Analysis Requested	c. Analysis Attached	3. EFFLUENT a. MAXIMUM DAILY VALUE (1) Concentration	(2) Mass	b. MAXIMUM 30 DAY VALUE (if available) (1) Concentration	(2) Mass	c. LONG TERM AVRG. VALUE (if available) (1) Concentration	(2) Mass	d. NO. OF ANALYSES	4. UNITS a. CONCENTRATION	b. MASS	5. INTAKE (optional) a. LONG TERM AVERAGE VALUE (1) Concentration	(2) Mass	b. NO. OF ANALYSES
GC/MS FRACTION – BASE/NEUTRAL COMPOUNDS															
1B. Acenaphthene (83-32-9)			X	< 0.010	< 0.2						mg/l	mg/d			
2B. Acenaphthylene (208-96-8)			X	< 0.010	< 0.2						mg/l	mg/d			
3B. Anthracene (120-12-7)			X	< 0.010	< 0.2						mg/l	mg/d			
4B. Benzidine (92-87-5)			X	< 0.010	< 0.2						mg/l	mg/d			
5B. Benzo (a) Anthracene (56-55-3)			X	< 0.010	< 0.2						mg/l	mg/d			
6B. Benzo (a) Pyrene (50-32-8)			X	< 0.010	< 0.2						mg/l	mg/d			
7B. 3,4-Benzo-fluoranthene (205-99-2)			X	< 0.010	< 0.2						mg/l	mg/d			
8B. Benzo (ghi) Perylene (191-24-2)			X	< 0.010	< 0.2						mg/l	mg/d			
9B. Benzo (k) Fluoranthene (207-08-9)			X	< 0.010	< 0.2						mg/l	mg/d			
10B. Bis (2-Chloro-ethoxy) Methane (111-91-1)			X	< 0.010	< 0.2						mg/l	mg/d			
11B. Bis (2-Chloro-ethyl) Ether (111-44-4)			X	< 0.010	< 0.2						mg/l	mg/d			
12B. Bis (2-Chloro-propyl) Ether (102-80-1)			X	< 0.010	< 0.2						mg/l	mg/d			
13B. Bis (2-Ethyl-hexyl) Phthalate (117-81-7)			X	< 0.010	< 0.2						mg/l	mg/d			
14B. 4-Bromo-phenyl Phenyl Ether (101-55-3)			X	< 0.010	< 0.2						mg/l	mg/d			
15B. Butyl Benzyl Phthalate (85-68-7)			X	< 0.010	< 0.2						mg/l	mg/d			
16B. 2-Chloro-naphthalene (91-58-7)			X	< 0.010	< 0.2						mg/l	mg/d			
17B. 4-Chloro-phenyl Phenyl Ether (7005-72-3)			X	< 0.010	< 0.2						mg/l	mg/d			
18B. Chrysene (218-01-9)			X	< 0.010	< 0.2						mg/l	mg/d			
19B. Dibenzo (a,h) Anthracene (53-70-3)			X	< 0.010	< 0.2						mg/l	mg/d			
20B. 1,2-Dichloro-benzene (95-50-1)			X	< 0.010	< 0.2						mg/l	mg/d			
21B. 1,3-Dichloro-benzene (541-73-1)			X	< 0.010	< 0.2						mg/l	mg/d			

CONTINUE ON PAGE V-7

CONTINUED FROM PAGE V-6

EPA I.D. NUMBER (copy from Item 1 of Form 1)	OUTFALL NUMBER
NM0890010515	04A

OMB No. 2040-0086
Approval expires 7-31-88

1. POLLUTANT AND CAS NUMBER (if available)	2. MARK "X" a. Testing Required	b. Believed Present	c. Believed Absent	3. EFFLUENT a. MAXIMUM DAILY VALUE (1) Concentration	(2) Mass	b. MAXIMUM 30 DAY VALUE (if available) (1) Concentration	(2) Mass	c. LONG TERM AVG. VALUE (if available) (1) Concentration	(2) Mass	d. NO. OF ANALYSES	4. UNITS a. CONCENTRATION	b. MASS	5. INTAKE (optional) a. LONG TERM AVERAGE VALUE (1) Concentration	(2) Mass	b. NO. OF ANALYSES
GC/MS FRACTION — BASE/NEUTRAL COMPOUNDS (continued)															
22B. 1,4-Dichlorobenzene (106-46-7)			X	< 0.010	< 0.2						mg/l	mg/d			
23B. 3,3'-Dichlorobenzidine (91-94-1)			X	< 0.010	< 0.2						mg/l	mg/d			
24B. Diethyl Phthalate (84-66-2)			X	< 0.010	< 0.2						mg/l	mg/d			
25B. Dimethyl Phthalate (131-11-3)			X	< 0.010	< 0.2						mg/l	mg/d			
26B. Di-N-Butyl Phthalate (84-74-2)			X	< 0.010	< 0.2						mg/l	mg/d			
27B. 2,4-Dinitrotoluene (121-14-2)			X	< 0.010	< 0.2						mg/l	mg/d			
28B. 2,6-Dinitrotoluene (606-20-2)			X	< 0.010	< 0.2						mg/l	mg/d			
29B. Di-N-Octyl Phthalate (117-84-0)			X	< 0.010	< 0.2						mg/l	mg/d			
30B. 1,2-Diphenylhydrazine (or Azobenzene) (122-66-7)			X	< 0.010	< 0.2						mg/l	mg/d			
31B. Fluoranthene (206-44-0)			X	< 0.010	< 0.2						mg/l	mg/d			
32B. Fluorene (86-73-7)			X	< 0.010	< 0.2						mg/l	mg/d			
33B. Hexachlorobenzene (118-74-1)			X	< 0.010	< 0.2						mg/l	mg/d			
34B. Hexachlorobutadiene (87-68-3)			X	< 0.010	< 0.2						mg/l	mg/d			
35B. Hexachlorocyclopentadiene (77-47-4)			X	< 0.010	< 0.2						mg/l	mg/d			
36B. Hexachloroethane (67-72-1)			X	< 0.010	< 0.2						mg/l	mg/d			
37B. Indeno (1,2,3-cd) Pyrene (193-39-5)			X	< 0.010	< 0.2						mg/l	mg/d			
38B. Isophorone (78-59-1)			X	< 0.010	< 0.2						mg/l	mg/d			
39B. Naphthalene (91-20-3)			X	< 0.010	< 0.2						mg/l	mg/d			
40B. Nitrobenzene (98-95-3)			X	< 0.010	< 0.2						mg/l	mg/d			
41B. N-Nitrosodimethylamine (62-75-9)			X	< 0.010	< 0.2						mg/l	mg/d			
42B. N-Nitrosodi-N-Propylamine (621-64-7)			X	< 0.010	< 0.2						mg/l	mg/d			

CONTINUE ON REVERSE

CONTINUED FROM THE FRONT

1. POLLUTANT AND CAS NUMBER (if available)	2. MARK "X" a. TREATABLE BY ANALYSIS	b. PRESENT	c. ABSENT	3. EFFLUENT a. MAXIMUM DAILY VALUE (1) CONCENTRATION	(2) MASS	b. MAXIMUM 30 DAY VALUE (if available) (1) CONCENTRATION	(2) MASS	c. LONG TERM AVRG. VALUE (if available) (1) CONCENTRATION	(2) MASS	d. NO. OF ANALYSES	4. UNITS a. CONCENTRATION	b. MASS	5. INTAKE (optional) a. LONG TERM AVERAGE VALUE (1) CONCENTRATION	(2) MASS	b. NO. OF ANALYSES
C/MS FRACTION — BASE/NEUTRAL COMPOUNDS (continued)															
38B. N-Nitrosodiphenylamine (86-30-6)			X	< 0.010	< 0.2						mg/l	mg/d			
48B. Phenanthrene (85-01-8)			X	< 0.010	< 0.2						mg/l	mg/d			
58B. Pyrene (129-00-0)			X	< 0.010	< 0.2						mg/l	mg/d			
68B. 1,2,4-Trichlorobenzene (120-82-1)			X	< 0.010	< 0.2						mg/l	mg/d			
C/MS FRACTION — PESTICIDES															
1P. Aldrin (309-00-2)			X	< 0.06	< 1.1						ug/l	ug/d			
2P. α-BHC (319-84-6)			X	< 0.02	< 0.4						ug/l	ug/d			
3P. β-BHC (319-85-7)			X	< 0.1	< 1.9						ug/l	ug/d			
4P. γ-BHC (58-89-9)			X	< 0.03	< 0.6						ug/l	ug/d			
5P. δ-BHC (319-86-8)			X	< 0.12	< 2.3						ug/l	ug/d			
6P. Chlordane (57-74-9)			X	< 0.25	< 4.7						ug/l	ug/d			
7P. 4,4'-DDT (50-29-3)			X	< 0.06	< 1.1						ug/l	ug/d			
8P. 4,4'-DDE (72-55-9)			X	< 0.08	< 1.5						ug/l	ug/d			
9P. 4,4'-DDD (72-54-8)			X	< 0.08	< 1.5						ug/l	ug/d			
10P. Dieldrin (60-57-1)			X	< 0.08	< 1.5						ug/l	ug/d			
11P. α-Endosulfan (115-29-7)			X	< 0.05	< 0.9						ug/l	ug/d			
12P. β-Endosulfan (115-29-7)			X	< 0.08	< 1.5						ug/l	ug/d			
13P. Endosulfan Sulfate (1031-07-8)			X	< 0.09	< 1.7						ug/l	ug/d			
14P. Endrin (72-20-8)			X	< 0.06	< 1.1						ug/l	ug/d			
15P. Endrin Aldehyde (7421-93-4)			X	< 0.62	< 11.7						ug/l	ug/d			
16P. Heptachlor (76-44-8)			X	< 0.3	< 5.7						ug/l	ug/d			

CONTINUE ON PAGE V-9

EPA Form 3510-2C (Rev. 2-85)

Form Approved.
OMB No. 2040-0086
Approval expires 7-31-88

EPA I.D. NUMBER (copy from Item 1 of Form 1)	OUTFALL NUMBER
NM0890010515	04A

CONTINUED FROM PAGE V-8

1. POLLUTANT AND CAS NUMBER (if available)	2. MARK "X" a. TREATABILITY MANUAL	b. BACKGROUND	c. BELIEVED ABSENT	3. EFFLUENT a. MAXIMUM DAILY VALUE (1) CONCENTRATION	(2) MASS	b. MAXIMUM 30 DAY VALUE (if available) (1) CONCENTRATION	(2) MASS	c. LONG TERM AVRG. VALUE (if available) (1) CONCENTRATION	(2) MASS	d. NO. OF ANALYSES	4. UNITS a. CONCENTRATION	b. MASS	5. INTAKE (optional) a. LONG TERM AVERAGE VALUE (1) CONCENTRATION	(2) MASS	b. NO. OF ANALYSES
GC/MS FRACTION – PESTICIDES (continued)															
17P. Heptachlor Epoxide (1024-57-3)			X	< 0.04	< 0.8						ug/l	ug/d			
18P. PCB-1242 (53469-21-9)			X	< 0.68	< 12.9						ug/l	ug/d			
19P. PCB-1254 (11097-69-1)			X	< 0.68	< 12.9						ug/l	ug/d			
20P. PCB-1221 (11104-28-2)			X	N.D.											
21P. PCB-1232 (11141-16-5)			X	N.D.											
22P. PCB-1248 (12672-29-6)			X	N.D.											
23P. PCB-1260 (11096-82-5)			X	< 0.68	< 12.9						ug/l	ug/d			
24P. PCB-1016 (12674-11-2)			X	N.D.											
25P. Toxaphene (8001-35-2)			X	< 2.5	< 47.3						ug/l	ug/d			

☆U.S. GOVERNMENT PRINTING OFFICE: 1985 [illegible]

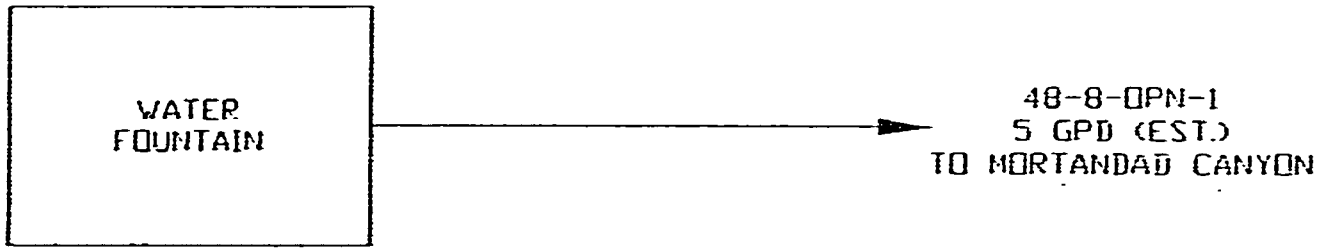

TA-48-8

NOT TO SCALE

Please type or print in the unshaded areas only

EPA ID Number (copy from Item I of Form 1): NM0890010515

Form Approved
OMB No. 2040-0086
Approval expires 7-31-88

Form 2D NPDES

EPA New Sources and New Dischargers Application for Permit to Discharge Process Wastewater

I. Outfall Location

For each outfall, list the latitude and longitude, and the name of the receiving water.

Outfall Number (list)	Latitude Deg	Latitude Min	Latitude Sec	Longitude Deg	Longitude Min	Longitude Sec	Receiving Water (name)
48-8-OPN-2	35	51	58	106	18	21	Tributary to Mortandad Canyon, and ephemeral tributary to the Rio Grande

II. Discharge Date (When do you expect to begin discharging?)

Active discharge noted during waste stream characterization.

III. Flows, Sources of Pollution, and Treatment Technologies

A. For each outfall, provide a description of (1) All operations contributing wastewater to the effluent, including process wastewater, sanitary wastewater, cooling water, and stormwater runoff; (2) The average flow contributed by each operation; and (3) The treatment received by the wastewater. Continue on additional sheets if necessary.

Outfall Number	1. Operations Contributing Flow (list)	2. Average Flow (include units)	3. Treatment (Description or List Codes from Table 2D-1)
48-8-OPN-2	Sink drain	5 GPD	None

B. Attach a line drawing showing the water flow through the facility. Indicate sources of intake water, operations contributing wastewater to the effluent, and treatment units labeled to correspond to the more detailed descriptions in Item III-A. Construct a water balance on the line drawing by showing average flows between intakes, operations, treatment units, and outfalls. If a water balance cannot be determined (e.g., for certain mining activities), provide a pictorial description of the nature and amount of any sources of water and any collection or treatment measures.

C. Except for storm runoff, leaks, or spills, will any of the discharges described in Item III-A be intermittent or seasonal?

☒ Yes *(complete the following table)* ☐ No *(go to Item IV)*

Outfall Number	1. Frequency		2. Flow		
	a. Days Per Week *(specify average)*	b. Months Per Year *(specify average)*	a. Maximum Daily Flow Rate *(in mgd)*	b. Maximum Total Volume *(specify, with units)*	c. Duration *(in days)*
48-8-OPN-2	5	12	0.000005	5 GPD	260 day/yr

IV. Production

If there is an applicable production-based effluent guideline or NSPS, for each outfall list the estimated level of production (projection of actual production level, not design), expressed in the terms and units used in the applicable effluent guideline or NSPS, for each of the first 3 years of operation. If production is likely to vary, you may also submit alternative estimates (attach a separate sheet).

Year	a. Quantity Per Day	b. Units of Measure	c. Operation, Product, Material, etc *(specify)*
			N/A

CONTINUE ON NEXT PAGE

CONTINUED FROM THE FRONT	EPA ID Number (copy from Item 1 of Form 1)	Outfall Number
	NM0890010515	48-8-OPN-2

V. Effluent Characteristics

A, and B: These items require you to report estimated amounts *(both concentration and mass)* of the pollutants to be discharged from each of your outfalls. Each part of this item addresses a different set of pollutants and should be completed in accordance with the specific instructions for that part. Data for each outfall should be on a separate page. Attach additional sheets of paper if necessary.

General Instructions *(See table 2D-2 for Pollutants)*

Each part of this item requests you to provide an estimated daily maximum and average for certain pollutants and the source of information. Data for all pollutants in Group A, for all outfalls, must be submitted unless waived by the permitting authority. For all outfalls, data for pollutants in Group B should be reported only for pollutants which you believe will be present or are limited directly by an effluent limitations guideline or NSPS or indirectly through limitations on an indicator pollutant.

1. Pollutant	2. Maximum Daily Value *(include units)*	3. Average Daily Value *(include units)*	4. Source *(see instructions)*
See attached 04A datasheets			Best professional estimates

CONTINUED FROM THE FRONT	EPA ID Number (copy from Item I of Form 1) NM0890010515

C. Use the space below to list any of the pollutants listed in Table 2D-3 of the instructions which you know or have reason to believe will be discharged from any outfall. For every pollutant you list, briefly describe the reasons you believe it will be present.

1. Pollutant	2. Reason for Discharge
N/A	

VI. Engineering Report on Wastewater Treatment

A. If there is any technical evaluation concerning your wastewater treatment, including engineering reports or pilot plant studies, check the appropriate box below.

☒ Report Available ☐ No Report Waste Stream Characterization Report #76

B. Provide the name and location of any existing plant(s) which, to the best of your knowledge, resembles this production facility with respect to production processes, wastewater constituents, or wastewater treatments.

Name	Location
N/A	

EPA ID Number (copy from Item one of Form 1)
NM0890010515

VII. Other Information (Optional)

Use the space below to expand upon any of the above questions or to bring to the attention of the reviewer any other information you feel should be considered in establishing permit limitations for the proposed facility. Attach additional sheets if necessary.

See attached 04A datasheets and line drawing. Discharge is consistent with potable water with hand washing activities (grey water).

VIII. Certification

I certify under penalty of law that this document and all attachments were prepared under my direction or supervision in accordance with a system designed to assure that qualified personnel properly gather and evaluate the information submitted. Based on my inquiry of the person or persons who manage the system, or those persons directly responsible for gathering the information, the information submitted is, to the best of my knowledge and belief, true, accurate, and complete. I am aware that there are significant penalties for submitting false information, including the possibility of fine and imprisonment for knowing violations.

A. Name and Official Title (type or print)	B. Phone No.
JERRY L. BELLOWS, AREA MANAGER, DOE ALLEN J. TIEDMAN, ASSOC. DIRECTOR FOR OPERATIONS	505-667-5105 505-667-9390
C. Signature	**D. Date Signed**

U.S. Government Printing Office : 1986 -491-191/51940

FORM 4 HERE

Data from worst case composite.

PLEASE PRINT OR TYPE IN THE UNSHADED AREAS ONLY. You may report some or all of this information on separate sheets (use the same format) instead of completing these pages. SEE INSTRUCTIONS.

EPA I.D. NUMBER (copy from Item I of Form 1): NM0890010515

Form Approved. OMB No. 2040-0086. Approval expires 7-31-88

V. INTAKE AND EFFLUENT CHARACTERISTICS (continued from page 3 of Form 2-C)

OUTFALL NO. 04A

PART A - You must provide the results of at least one analysis for every pollutant in this table. Complete one table for each outfall. See instructions for additional details.

1. POLLUTANT	2. EFFLUENT a. MAXIMUM DAILY VALUE (1) CONCENTRATION	(2) MASS	b. MAXIMUM 30 DAY VALUE (if available) (1) CONCENTRATION	(2) MASS	c. LONG TERM AVRG. VALUE (if available) (1) CONCENTRATION	(2) MASS	d. NO. OF ANALYSES	3. UNITS (specify if blank) a. CONCENTRATION	b. MASS	4. INTAKE (optional) a. LONG TERM AVERAGE VALUE (1) CONCENTRATION	(2) MASS	b. NO. OF ANALYSES
a. Biochemical Oxygen Demand (BOD)	< 2.0	< 37.9						mg/l	g/d			
b. Chemical Oxygen Demand (COD)	< 10.0	< 0.2						mg/l	g/d			
c. Total Organic Carbon (TOC)	0.6	11.2						mg/l	g/d			
d. Total Suspended Solids (TSS)	18.0	0.3						mg/l	g/d			
e. Ammonia (as N)	< 0.1	< 1.893						mg/l	g/d			
f. Flow	VALUE 5		VALUE		VALUE			gal/day		VALUE		
g. Temperature (winter)	VALUE 13.9		VALUE		VALUE			°C		VALUE		
h. Temperature (summer)	VALUE N/A		VALUE		VALUE			°C		VALUE		
i. pH	MINIMUM 8.45	MAXIMUM 8.80	MINIMUM	MAXIMUM				STANDARD UNITS				

PART B - Mark "X" in column 2-a for each pollutant you know or have reason to believe is present. Mark "X" in column 2-b for each pollutant you believe to be absent. If you mark column 2a for any pollutant which is limited either directly or indirectly but expressly, in an effluent limitations guideline, you must provide the results of at least one analysis for that pollutant. For other pollutants for which you mark column 2a, you must provide quantitative data or an explanation of their presence in your discharge. Complete one table for each outfall. See the instructions for additional details and requirements.

1. POLLUTANT AND CAS NO. (if available)	2. MARK "X" a. BELIEVED PRESENT	b. BELIEVED ABSENT	3. EFFLUENT a. MAXIMUM DAILY VALUE (1) CONCENTRATION	(2) MASS	b. MAXIMUM 30 DAY VALUE (if available) (1) CONCENTRATION	(2) MASS	c. LONG TERM AVRG. VALUE (if available) (1) CONCENTRATION	(2) MASS	d. NO. OF ANALYSES	4. UNITS a. CONCENTRATION	b. MASS	5. INTAKE (optional) a. LONG TERM AVERAGE VALUE (1) CONCENTRATION	(2) MASS	b. NO. OF ANALYSES
a. Bromide (24959-67-9)			< 0.5	< 9.5						mg/l	g/d			
b. Chlorine, Total Residual	X		0.05	0.0						mg/l	mg/d			
c. Color	X		7.0							units				
d. Fecal Coliform		X												
e. Fluoride (16984-48-8)	X		0.21	4.0						mg/l	g/d			
f. Nitrate-Nitrite (as N)	X		0.304	5.8						mg/l	g/d			

CONTINUE ON REVERSE

ITEM V-B CONTINUED FROM FRONT

1. POLLUTANT AND CAS NO. (if available)	2. MARK "X" a. BELIEVED PRESENT	b. BELIEVED ABSENT	3. EFFLUENT a. MAXIMUM DAILY VALUE (1) CONCENTRATION	(2) MASS	b. MAXIMUM 30 DAY VALUE (if available) (1) CONCENTRATION	(2) MASS	c. LONG TERM AVG. VALUE (if available) (1) CONCENTRATION	(2) MASS	d. NO. OF ANALYSES	4. UNITS a. CONCENTRATION	b. MASS	5. INTAKE (optional) a. LONG TERM AVERAGE VALUE (1) CONCENTRATION	(2) MASS	b. NO. OF ANALYSES
g. Nitrogen, Total Organic (as N)		X	< 0.5	< 9.5						mg/l	mg/d			
h. Oil and Grease		X	< 1.05	< 19.9						mg/l	mg/d			
i. Phosphorus (as P), Total (7723-14-0)	X		0.05	0.9						mg/l	mg/d			
j. Radioactivity														
(1) Alpha, Total	X		0.1	1.9						pCi/l	pCi/d			
(2) Beta, Total	X		6.6	0.1						pCi/l	nCi/d			
(3) Radium, Total	X													
(4) Radium 226, Total	X		0.06	1.1						pCi/l	pCi/d			
k. Sulfate (as SO_4) (14808-79-8)	X		3.16	59.8						mg/l	mg/d			
l. Sulfide (as S)		X		0.0						mg/l	mg/d			
m. Sulfite (as SO_3) (14265-45-3)		X	< 0.05	< 0.9						mg/l	mg/d			
n. Surfactants		X	< 0.1	< 1.9						mg/l	mg/d			
o. Aluminum, Total (7429-90-5)		X	< 0.04	< 0.8						mg/l	mg/d			
p. Barium, Total (7440-39-3)	X		0.03	0.6						mg/l	mg/d			
q. Boron, Total (7440-42-8)	X		0.02	0.4						mg/l	mg/d			
r. Cobalt, Total (7440-48-4)		X	< 0.1	< 1.9						mg/l	mg/d			
s. Iron, Total (7439-89-6)	X		0.41	7.8						mg/l	mg/d			
t. Magnesium, Total (7439-95-4)	X		2.5	47.3						mg/l	mg/d			
u. Molybdenum, Total (7439-98-7)		X	< 0.02	< 0.4						mg/l	mg/d			
v. Manganese, Total (7439-96-5)	X		0.01	0.2						mg/l	mg/d			
w. Tin, Total (7440-31-5)		X	< 0.050	< 0.9						mg/l	mg/d			
x. Titanium, Total (7440-32-6)		X	< 0.004	< 0.1						mg/l	mg/d			

CONTINUE ON PAGE V-3

EPA I.D. NUMBER (copy from Item 1 of Form 1)	OUTFALL NUMBER
NM0890010515	04A

Form Approved
OMB No. 2040-0086
Approval expires 7-31-82

CONTINUED FROM PAGE 3 OF FORM 2-C

PART C - If you are a primary industry and this outfall contains process wastewater, refer to Table 2c-2 in the instructions to determine which of the GC/MS fractions you must test for. Mark "X" in column 2-a for all such GC/MS fractions that apply to your industry and for ALL toxic metals, cyanides, and total phenols. If you are not required to mark column 2-a *(secondary industries, nonprocess wastewater outfalls, and nonrequired GC/MS fractions)*, mark "X" in column 2-b for each pollutant you know or have reason to believe is present. Mark "X" in column 2-c for each pollutant you believe is absent. If you mark column 2a for any pollutant, you must provide the results of at least one analysis for that pollutant. If you mark column 2b for any pollutant, you must provide the results of at least one analysis for that pollutant if you know or have reason to believe it will be discharged in concentrations of 10 ppb or greater. If you mark column 2b for acrolein, acrylonitrile, 2,4 dinitrophenol, or 2-methyl-4, 6 dinitrophenol, you must provide the results of at least one analysis for each of these pollutants which you know or have reason to believe that you discharge in concentrations of 100 ppb or greater. Otherwise, for pollutants for which you mark column 2b, you must either submit at least one analysis or briefly describe the reasons the pollutant is expected to be discharged. Note that there are 7 pages to this part; please review each carefully. Complete one table *(all 7 pages)* for each outfall. See instructions for additional details and requirements.

1. POLLUTANT AND CAS NUMBER (if available)	2. MARK "X"			3. EFFLUENT							4. UNITS		5. INTAKE (optional)		
	a. TEST-ED-ABSENT	b. BELIEVED PRESENT	c. BELIEVED ABSENT	a. MAXIMUM DAILY VALUE		b. MAXIMUM 30 DAY VALUE (if available)		c. LONG TERM AVRG. VALUE (if available)		d. NO. OF ANALYSES	a. CONCENTRATION	b. MASS	a. LONG TERM AVERAGE VALUE		b. NO. OF ANALYSES
				(1) CONCENTRATION	(2) MASS	(1) CONCENTRATION	(2) MASS	(1) CONCENTRATION	(2) MASS				(1) CONCENTRATION	(2) MASS	
METALS, CYANIDE, AND TOTAL PHENOLS															
1M. Antimony, Total (7440-36-0)			X	< 0.050	< 0.9						mg/l	mg/d			
2M. Arsenic, Total (7440-38-2)		X		0.002	0.0						mg/l	mg/d			
3M. Beryllium, Total, 7440-41-7)			X	< 0.001	< 0.0						mg/l	mg/d			
4M. Cadmium, Total (7440-43-9)			X	< 0.010	< 0.2						mg/l	mg/d			
5M. Chromium, Total (7440-47-3)		X		0.040	0.8						mg/l	mg/d			
6M. Copper, Total (7440-50-8)		X		0.031	0.6						mg/l	mg/d			
7M. Lead, Total (7439-92-1)			X	< 0.050	< 0.9						mg/l	mg/d			
8M. Mercury, Total (7439-97-6)			X	< 0.0002	< 0.00						mg/l	mg/d			
9M. Nickel, Total (7440-02-0)		X		0.06	1.1						mg/l	mg/d			
10M. Selenium, Total (7782-49-2)			X	< 0.001	< 0.0						mg/l	mg/d			
11M. Silver, Total (7440-22-4)			X	< 0.010	< 0.2						mg/l	mg/d			
12M. Thallium, Total (7440-28-0)			X	< 0.4	< 7.6						mg/l	mg/d			
13M. Zinc, Total (7440-66-6)		X		0.043	0.8						mg/l	mg/d			
14M. Cyanide, Total (57-12-5)			X	0.01	0.2						mg/l	mg/d			
15M. Phenols, Total			X	< 0.01	< 0.2						mg/l	mg/d			
DIOXIN															
2,3,7,8-Tetrachlorodibenzo-P-Dioxin (1764-01-6)			X	DESCRIBE RESULTS											

CAS NUMBER (if available)	a. Test and Analytical Methods	b. Detection Levels	c. Quantitation Levels	3. EFFLUENT a. Maximum Daily Value (1) Concentration	(2) Mass	b. Maximum 30 Day Value (if available) (1) Concentration	(2) Mass	c. Long Term Avg. Value (if available) (1) Concentration	(2) Mass	d. No. of Analyses	4. Units a. Concentration	b. Mass	5. Intake (optional) a. Long Term Average Value (1) Concentration	(2) Mass	b. No. of Analyses
GC/MS FRACTION — VOLATILE COMPOUNDS															
1V. Acrolein (107-02-8)			X												
2V. Acrylonitrile (107-13-1)			X												
3V. Benzene (71-43-2)			X	< 0.005	< 0.1						mg/l	mg/d			
4V. Bis (Chloromethyl) Ether (542-88-1)			X												
5V. Bromoform (75-25-2)			X	< 0.005	< 0.1						mg/l	mg/d			
6V. Carbon Tetrachloride (56-23-5)			X	< 0.005	< 0.1						mg/l	mg/d			
7V. Chlorobenzene (108-90-7)			X	< 0.005	< 0.1						mg/l	mg/d			
8V. Chlorodibromomethane (124-48-1)			X	< 0.005	< 0.1						mg/l	mg/d			
9V. Chloroethane (75-00-3)			X	< 0.010	< 0.000						mg/l	mg/d			
10V. 2-Chloroethylvinyl Ether (110-75-8)			X												
11V. Chloroform (67-66-3)			X	< 0.005	< 0.1						mg/l	mg/d			
12V. Dichlorobromomethane (75-27-4)			X	< 0.005	< 0.1						mg/l	mg/d			
13V. Dichlorodifluoromethane (75-71-8)			X												
14V. 1,1-Dichloroethane (75-34-3)			X	< 0.005	< 0.1						mg/l	mg/d			
15V. 1,2-Dichloroethane (107-06-2)			X	< 0.005	< 0.1						mg/l	mg/d			
16V. 1,1-Dichloroethylene (75-35-4)			X	< 0.005	< 0.1						mg/l	mg/d			
17V. 1,2-Dichloropropane (78-87-5)			X	< 0.005	< 0.1						mg/l	kg/d			
18V. 1,3-Dichloropropylene (542-75-6)			X	<	< 0.0						mg/l	mg/d			
19V. Ethylbenzene (100-41-4)			X	< 0.005	< 0.1						mg/l	mg/d			
20V. Methyl Bromide (74-83-9)			X	< 0.010	< 0.2						mg/l	mg/d			
21V. Methyl Chloride (74-87-3)			X	< 0.010	< 0.2						mg/l	mg/d			

CONTINUE ON PAGE V-5

CONTINUED FROM PAGE V-4

1. POLLUTANT AND CAS NUMBER (if available)	2. MARK "X" a. TEST and BE-LIEVED PRES-ENT	b. BE-LIEVED PRES-ENT	c. BE-LIEVED AB-SENT	3. EFFLUENT a. MAXIMUM DAILY VALUE (1) CONCENTRATION	(2) MASS	b. MAXIMUM 30 DAY VALUE (if available) (1) CONCENTRATION	(2) MASS	c. LONG TERM AVRG. VALUE (if available) (1) CONCENTRATION	(2) MASS	d. NO. OF ANAL-YSES	4. UNITS a. CONCEN-TRATION	b. MASS	5. INTAKE (optional) a. LONG TERM AVERAGE VALUE (1) CONCEN-TRATION	(2) MASS	b. NO. OF ANAL-YSES
GC/MS FRACTION — VOLATILE COMPOUNDS (continued)															
22V. Methylene Chloride (75-09-2)			X	< 0.005	< 0.1						mg/l	mg/d			
23V. 1,1,2,2-Tetrachloroethane (79-34-5)			X	< 0.005	< 0.1						mg/l	mg/d			
24V. Tetrachloroethylene (127-18-4)			X	< 0.005	< 0.1						mg/l	mg/d			
25V. Toluene (108-88-3)			X	< 0.005	< 0.1						mg/l	mg/d			
26V. 1,2-Trans-Dichloroethylene (156-60-5)			X	< 0.005	< 0.1						mg/l	mg/d			
27V. 1,1,1-Trichloroethane (71-55-6)			X	< 0.005	< 0.1						mg/l	mg/d			
28V. 1,1,2-Trichloroethane (79-00-5)			X	< 0.005	< 0.1						mg/l	mg/d			
29V. Trichloroethylene (79-01-6)			X	< 0.005	< 0.1						mg/l	mg/d			
30V. Trichlorofluoromethane (75-69-4)			X	< 0.005	< 0.1						mg/l	mg/d			
31V. Vinyl Chloride (75-01-4)			X	< 0.010	< 0.2						mg/l	mg/d			
GC/MS FRACTION — ACID COMPOUNDS															
1A. 2-Chlorophenol (95-57-8)			X	< 0.010	< 0.2						mg/l	mg/d			
2A. 2,4-Dichlorophenol (120-83-2)			X	< 0.010	< 0.2						mg/l	mg/d			
3A. 2,4-Dimethylphenol (105-67-9)			X	< 0.010	< 0.2						mg/l	mg/d			
4A. 4,6-Dinitro-O-Cresol (534-52-1)			X	< 0.010	< 0.2						mg/l	mg/d			
5A. 2,4-Dinitrophenol (51-28-5)			X	< 0.010	< 0.2						mg/l	mg/d			
6A. 2-Nitrophenol (88-75-5)			X	< 0.010	< 0.2						mg/l	mg/d			
7A. 4-Nitrophenol (100-02-7)			X	< 0.010	< 0.2						mg/l	mg/d			
8A. P-Chloro M-Cresol (59-50-7)			X	< 0.010	< 0.2						mg/l	mg/d			
9A. Pentachlorophenol (87-86-5)			X	< 0.010	< 0.2						mg/l	mg/d			
10A. Phenol (108-95-2)			X	< 0.010	< 0.2						mg/l	mg/d			
11A. 2,4,6-Trichlorophenol (88-06-2)			X	< 0.010	< 0.2						mg/l	mg/d			

CONTINUE ON REVERSE

CONTINUED FROM THE FRONT

1. POLLUTANT AND CAS NUMBER (if available)	2. MARK "X" a. Believed Absent	b. Believed Present	c. Believed Absent	3. EFFLUENT a. MAXIMUM DAILY VALUE (1) Concentration	(2) Mass	b. MAXIMUM 30 DAY VALUE (if available) (1) Concentration	(2) Mass	c. LONG TERM AVRG. VALUE (if available) (1) Concentration	(2) Mass	d. NO. OF ANALYSES	4. UNITS a. CONCENTRATION	b. MASS	5. INTAKE (optional) a. LONG TERM AVERAGE VALUE (1) Concentration	(2) Mass	b. NO. OF ANALYSES
GC/MS FRACTION — BASE/NEUTRAL COMPOUNDS															
1B. Acenaphthene (83-32-9)			X	< 0.010	< 0.2						mg/l	mg/d			
2B. Acenaphthylene (208-96-8)			X	< 0.010	< 0.2						mg/l	mg/d			
3B. Anthracene (120-12-7)			X	< 0.010	< 0.2						mg/l	mg/d			
4B. Benzidine (92-87-5)			X	< 0.010	< 0.2						mg/l	mg/d			
5B. Benzo (a) Anthracene (56-55-3)			X	< 0.010	< 0.2						mg/l	mg/d			
6B. Benzo (a) Pyrene (50-32-8)			X	< 0.010	< 0.2						mg/l	mg/d			
7B. 3,4-Benzo-fluoranthene (205-99-2)			X	< 0.010	< 0.2						mg/l	mg/d			
8B. Benzo (ghi) Perylene (191-24-2)			X	< 0.010	< 0.2						mg/l	mg/d			
9B. Benzo (k) Fluoranthene (207-08-9)			X	< 0.010	< 0.2						mg/l	mg/d			
10B. Bis (2-Chloro-ethoxy) Methane (111-91-1)			X	< 0.010	< 0.2						mg/l	mg/d			
11B. Bis (2-Chloro-ethyl) Ether (111-44-4)			X	< 0.010	< 0.2						mg/l	mg/d			
12B. Bis (2-Chloro-propyl) Ether (108-60-1)			X	< 0.010	< 0.2						mg/l	mg/d			
13B. Bis (2-Ethyl-hexyl) Phthalate (117-81-7)			X	< 0.010	< 0.2						mg/l	mg/d			
14B. 4-Bromo-phenyl Phenyl Ether (101-55-3)			X	< 0.010	< 0.2						mg/l	mg/d			
15B. Butyl Benzyl Phthalate (85-68-7)			X	< 0.010	< 0.2						mg/l	mg/d			
16B. 2-Chloro-naphthalene (91-58-7)			X	< 0.010	< 0.2						mg/l	mg/d			
17B. 4-Chloro-phenyl Phenyl Ether (7005-72-3)			X	< 0.010	< 0.2						mg/l	mg/d			
18B. Chrysene (218-01-9)			X	< 0.010	< 0.2						mg/l	mg/d			
19B. Dibenzo (a,h) Anthracene (53-70-3)			X	< 0.010	< 0.2						mg/l	mg/d			
20B. 1,2 Dichloro-benzene (95-50-1)			X	< 0.010	< 0.2						mg/l	mg/d			
21B. 1,3 Dichloro-benzene (541-73-1)			X	< 0.010	< 0.2						mg/l	mg/d			

CONTINUE ON PAGE V

Form Approved.
OMB No. 2040-0086
Approval expires 7-31-88

EPA I.D. NUMBER (copy from Item 1 of Form 1)	OUTFALL NUMBER
NM0890010515	04A

CONTINUED FROM PAGE V-6

1. POLLUTANT AND CAS NUMBER (if available)	2. MARK "X" a. Testing Required	b. Believed Present	c. Believed Absent	3. EFFLUENT a. MAXIMUM DAILY VALUE (1) Concentration	(2) Mass	b. MAXIMUM 30 DAY VALUE (if available) (1) Concentration	(2) Mass	c. LONG TERM AVRG. VALUE (if available) (1) Concentration	(2) Mass	d. NO. OF ANALYSES	4. UNITS a. CONCENTRATION	b. MASS	5. INTAKE (optional) a. LONG TERM AVERAGE VALUE (1) Concentration	(2) Mass	b. NO. OF ANALYSES
GC/MS FRACTION – BASE/NEUTRAL COMPOUNDS (continued)															
22B. 1,4-Dichlorobenzene (106-46-7)			X	< 0.010	< 0.2						mg/l	mg/d			
23B. 3,3'-Dichlorobenzidine (91-94-1)			X	< 0.010	< 0.2						mg/l	mg/d			
24B. Diethyl Phthalate (84-66-2)			X	< 0.010	< 0.2						mg/l	mg/d			
25B. Dimethyl Phthalate (131-11-3)			X	< 0.010	< 0.2						mg/l	mg/d			
26B. Di-N-Butyl Phthalate (84-74-2)			X	< 0.010	< 0.2						mg/l	mg/d			
27B. 2,4-Dinitrotoluene (121-14-2)			X	< 0.010	< 0.2						mg/l	mg/d			
28B. 2,6-Dinitrotoluene (606-20-2)			X	< 0.010	< 0.2						mg/l	mg/d			
29B. Di-N-Octyl Phthalate (117-84-0)			X	< 0.010	< 0.2						mg/l	mg/d			
30B. 1,2-Diphenylhydrazine (as Azobenzene) (122-66-7)			X	< 0.010	< 0.2						mg/l	mg/d			
31B. Fluoranthene (206-44-0)			X	< 0.010	< 0.2						mg/l	mg/d			
32B. Fluorene (86-73-7)			X	< 0.010	< 0.2						mg/l	mg/d			
33B. Hexachlorobenzene (118-74-1)			X	< 0.010	< 0.2						mg/l	mg/d			
34B. Hexachlorobutadiene (87-68-3)			X	< 0.010	< 0.2						mg/l	mg/d			
35B. Hexachlorocyclopentadiene (77-47-4)			X	< 0.010	< 0.2						mg/l	mg/d			
36B. Hexachloroethane (67-72-1)			X	< 0.010	< 0.2						mg/l	mg/d			
37B. Indeno (1,2,3-cd) Pyrene (193-39-5)			X	< 0.010	< 0.2						mg/l	mg/d			
38B. Isophorone (78-59-1)			X	< 0.010	< 0.2						mg/l	mg/d			
39B. Naphthalene (91-20-3)			X	< 0.010	< 0.2						mg/l	mg/d			
40B. Nitrobenzene (98-95-3)			X	< 0.010	< 0.2						mg/l	mg/d			
41B. N-Nitrosodimethylamine (62-75-9)			X	< 0.010	< 0.2						mg/l	mg/d			
42B. N-Nitrosodi-N-Propylamine (621-64-7)			X	< 0.010	< 0.2						mg/l	mg/d			

CONTINUE ON REVERSE

CONTINUED FROM THE FRONT

1. POLLUTANT AND CAS NUMBER (if available)	2. MARK "X" a. Testing Required	b. Believed Present	c. Believed Absent	3. EFFLUENT a. MAXIMUM DAILY VALUE (1) Concentration	(2) Mass	b. MAXIMUM 30 DAY VALUE (if available) (1) Concentration	(2) Mass	c. LONG TERM AVRG. VALUE (if available) (1) Concentration	(2) Mass	d. NO. OF ANALYSES	4. UNITS a. CONCENTRATION	b. MASS	5. INTAKE (optional) a. LONG TERM AVERAGE VALUE (1) Concentration	(2) Mass	b. NO. OF ANALYSES
GC/MS FRACTION — BASE/NEUTRAL COMPOUNDS (continued)															
37B. N-Nitrosodiphenylamine (86-30-6)			X	< 0.010	< 0.2						mg/l	mg/d			
38B. Phenanthrene (85-01-8)			X	< 0.010	< 0.2						mg/l	mg/d			
39B. Pyrene (129-00-0)			X	< 0.010	< 0.2						mg/l	mg/d			
40B. 1,2,4-Trichlorobenzene (120-82-1)			X	< 0.010	< 0.2						mg/l	mg/d			
GC/MS FRACTION — PESTICIDES															
1P. Aldrin (309-00-2)			X	< 0.06	< 1.1						ug/l	ug/d			
2P. α-BHC (319-84-6)			X	< 0.02	< 0.4						ug/l	ug/d			
3P. β-BHC (319-85-7)			X	< 0.1	< 1.9						ug/l	ug/d			
4P. γ-BHC (58-89-9)			X	< 0.03	< 0.6						ug/l	ug/d			
5P. δ-BHC (319-86-8)			X	< 0.12	< 2.3						ug/l	ug/d			
6P. Chlordane (57-74-9)			X	< 0.25	< 4.7						ug/l	ug/d			
7P. 4,4'-DDT (50-29-3)			X	< 0.06	< 1.1						ug/l	ug/d			
8P. 4,4'-DDE (72-55-9)			X	< 0.08	< 1.5						ug/l	ug/d			
9P. 4,4'-DDD (72-54-8)			X	< 0.08	< 1.5						ug/l	ug/d			
10P. Dieldrin (60-57-1)			X	< 0.08	< 1.5						ug/l	ug/d			
11P. α-Endosulfan (115-29-7)			X	< 0.05	< 0.9						ug/l	ug/d			
12P. β-Endosulfan (115-29-7)			X	< 0.08	< 1.5						ug/l	ug/d			
13P. Endosulfan Sulfate (1031-07-8)			X	< 0.09	< 1.7						ug/l	ug/d			
14P. Endrin (72-20-8)			X	< 0.06	< 1.1						ug/l	ug/d			
15P. Endrin Aldehyde (7421-93-4)			X	< 0.62	< 11.7						ug/l	ug/d			
16P. Heptachlor (76-44-8)			X	< 0.3	< 5.7						ug/l	ug/d			

CONTINUE ON PAGE V-9

NM0890010515 | 04A

OMB No. 2040-0086
Approval expires 7-31-88

1. POLLUTANT AND CAS NUMBER (if available)	2. MARK "X" a. TREATED BELOW BACKGROUND	b. ABSENT BELOW DETECT	c. ABSENT	3. EFFLUENT a. MAXIMUM DAILY VALUE (1) CONCENTRATION	(2) MASS	b. MAXIMUM 30 DAY VALUE (if available) (1) CONCENTRATION	(2) MASS	c. LONG TERM AVRG. VALUE (if available) (1) CONCENTRATION	(2) MASS	d. NO. OF ANALYSES	4. UNITS a. CONCENTRATION	b. MASS	5. INTAKE (optional) a. LONG TERM AVERAGE VALUE (1) CONCENTRATION	(2) MASS	b. NO. OF ANALYSES
GC/MS FRACTION – PESTICIDES (continued)															
17P. Heptachlor Epoxide (1024-57-3)			X	< 0.04	< 0.8						ug/l	ug/d			
18P. PCB-1242 (53469-21-9)			X	< 0.68	< 12.9						ug/l	ug/d			
19P. PCB-1254 (11097-69-1)			X	< 0.68	< 12.9						ug/l	ug/d			
20P. PCB-1221 (11104-28-2)			X	N.D.											
21P. PCB-1232 (11141-16-5)			X	N.D.											
22P. PCB-1248 (12672-29-6)			X	N.D.											
23P. PCB-1260 (11096-82-5)			X	< 0.68	< 12.9						ug/l	ug/d			
24P. PCB-1016 (12674-11-2)			X	N.D.											
25P. Toxaphene (8001-35-2)			X	< 2.5	< 47.3						ug/l	ug/d			

☆U.S. GOVERNMENT PRINTING OFFICE : 1986 O – 491-101 (46116)

TA-48-8

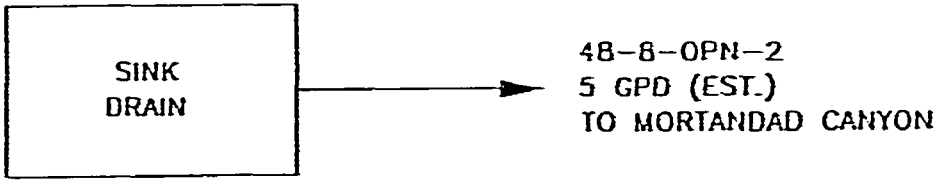

DYE STUDY INFORMATION

BUILDING NUMBER	DRAIN NUMBER	DID DYE REACH EXPECTED DESTINATION?	COMMENTS
48-1	1SD5	YES	RLW DYE TESTED BY ABSENCE OF DYE TO SANITARY OR DAYLIGHT OUTFALL
48-1	1SD9	YES	RLW DYE TESTED BY ABSENCE OF DYE TO SANITARY OR DAYLIGHT OUTFALL
48-1	1SD14	YES	RLW DYE TESTED BY ABSENCE OF DYE TO SANITARY OR DAYLIGHT OUTFALL
48-1	BED1	YES	48-1-OPN-2 04A016
48-1	1FD10	YES	48-1-OPN-3 SANITARY
48-1	1FD11	YES	48-1-OPN-3 SANITARY
48-1	1SD15	YES	48-1-OPN-3 SANITARY
48-1	1SD16	YES	48-1-OPN-3 SANITARY
48-1	1SD17	YES	48-1-OPN-3 SANITARY
48-1	1SH1	YES	48-1-OPN-3 SANITARY
48-1	1SH2	YES	48-1-OPN-3 SANITARY
48-1	1SH5	YES	48-1-OPN-3 SANITARY
48-1	1TL1	YES	48-1-OPN-3 SANITARY
48-1	1TL2	YES	48-1-OPN-3 SANITARY
48-1	1TL3	YES	48-1-OPN-3 SANITARY
48-1	1TL9	YES	48-1-OPN-3 SANITARY
48-1	BSD1	YES	48-1-OPN-3 SANITARY
48-1	BSD2	YES	48-1-OPN-3 SANITARY
48-1	BED11	YES	48-1-OPN-4 03A045
48-1	BFD11	YES	48-1-OPN-4 03A045
48-1	BFS1	YES	48-1-OPN-4 03A045
48-1	BSD3	YES	48-1-OPN-4 03A045
48-1	RD14	YES	48-1-OPN-4 03A045
48-1	RD19	YES	48-1-OPN-4 03A045
48-1	1SD19	YES	48-1-OPN-6 SANITARY
48-1	1SH6	YES	48-1-OPN-6 SANITARY
48-1	1TL10	YES	48-1-OPN-6 SANITARY
48-1	BSD4	YES	48-1-OPN-6 SANITARY
48-1	BTL2	YES	48-1-OPN-6 SANITARY
48-1	2ED1	YES	48-1-OPN-7 04A153
48-1	BFD18	YES	48-1-OPN-7 04A153
48-1	1SD22	YES	RLW DYE TESTED BY ABSENCE OF DYE TO SANITARY OR DAYLIGHT OUTFALL
48-1	1SD28	YES	ABANDONED RLW SUMP
48-1	1FD27	YES	48-1-OPN-21 04A131
48-1	BFD26	YES	48-1-OPN-21 04A131
48-1	BTD1	YES	48-1-OPN-21 04A131
48-1	1TL13	YES	48-1-OPN-32 SANITARY

DYE STUDY INFORMATION

BUILDING NUMBER	DRAIN NUMBER	DID DYE REACH EXPECTED DESTINATION?	COMMENTS
48-1	1ED19	YES	RLW DYE TESTED BY ABSENCE OF DYE TO SANITARY OR DAYLIGHT OUTFALL
48-1	1SD41	YES	RLW DYE TESTED BY ABSENCE OF DYE TO SANITARY OR DAYLIGHT OUTFALL
48-1	1SD44	YES	RLW DYE TESTED BY ABSENCE OF DYE TO SANITARY OR DAYLIGHT OUTFALL
48-1	1SD51	YES	RLW DYE TESTED BY ABSENCE OF DYE TO SANITARY OR DAYLIGHT OUTFALL
48-1	1SD70	YES	RLW DYE TESTED BY ABSENCE OF DYE TO SANITARY OR DAYLIGHT OUTFALL
48-1	BFD33	YES	RLW DYE TESTED BY ABSENCE OF DYE TO SANITARY OR DAYLIGHT OUTFALL
48-1	BFD34	YES	RLW DYE TESTED BY ABSENCE OF DYE TO SANITARY OR DAYLIGHT OUTFALL
48-2	1LV1	YES	48-2-OPN-1 SANITARY
48-2	1TL1	YES	48-2-OPN-1 SANITARY
48-8	1SD1	YES	48-8-OPN-2 DAYLIGHT
48-8	1WF1	YES	48-8-OPN-1 DAYLIGHT
48-17	1SD1	YES	48-17-OPN-1 SANITARY
48-17	1TL1	YES	48-17-OPN-1 SANITARY
48-28	1ED1	YES	48-28-OPN-2 DAYLIGHT
48-28	1FS3	YES	48-28-OPN-1 SANITARY
48-28	1SD1	YES	48-28-OPN-1 SANITARY
48-28	1SD2	YES	48-28-OPN-1 SANITARY
48-28	1SD3	YES	48-28-OPN-1 SANITARY
48-28	1SD4	YES	48-28-OPN-1 SANITARY
48-28	1TL1	YES	48-28-OPN-1 SANITARY
48-29	1SD1	YES	48-29-OPN-1 SANITARY
48-29	1TL1	YES	48-29-OPN-1 SANITARY
48-29	1TL2	YES	48-29-OPN-1 SANITARY
48-34	1SD1	YES	48-34-OPN-1 SANITARY
48-34	1TL1	YES	48-34-OPN-1 SANITARY
48-45	1FD2	YES	48-45-OPN-1 SANITARY
48-45	1FD3	YES	48-45-OPN-1 SANITARY
48-45	1SD7	YES	48-45-OPN-2 SANITARY
48-45	1TL2	YES	48-45-OPN-2 SANITARY
48-45	1TL3	YES	48-45-OPN-2 SANITARY
48-46	1SD2	YES	48-46-OPN-2 04A137
48-46	1SD3	YES	48-46-OPN-2 04A137
48-47	1TL1	YES	48-47-OPN-1 SANITARY
48-47	1TL2	YES	48-47-OPN-1 SANITARY
48-56	1TL1	YES	48-56-OPN-1 SANITARY
48-56	1TL2	YES	48-56-OPN-1 SANITARY
48-57	1SD2	YES	48-57-OPN-1 SANITARY

Appendix 5

196

Media Place Holder Target

This target represents media that was not microfilmed. The original media can be obtained through the Records Processing Facility.

ER ID # 56204

Box # 183

Record Type: Drawing

Date: 3-25-94

Symbol: 11056-76

Subject:

TA 48-1 Basement Drain Schematic
Lab job No. 11056-76

Media Place Holder Target

This target represents media that was not microfilmed. The original media can be obtained through the Records Processing Facility.

ER ID # 56204

Box # 183

Record Type: Drawing

Date: 3-25-94

Symbol: 11056-76

Subject:

TA 48-1 First Floor Drain Schematic
Lab job No. 11056-76

Media Place Holder Target

This target represents media that was not microfilmed. The original media can be obtained through the Records Processing Facility.

ER ID # 56204

Box # 183

Record Type: Drawing

Date: 3-25-94

Symbol: 11056-76

Subject:

TA-3-48 ROOF DRAIN SCHEMATIC
Lab job No. 11056-76

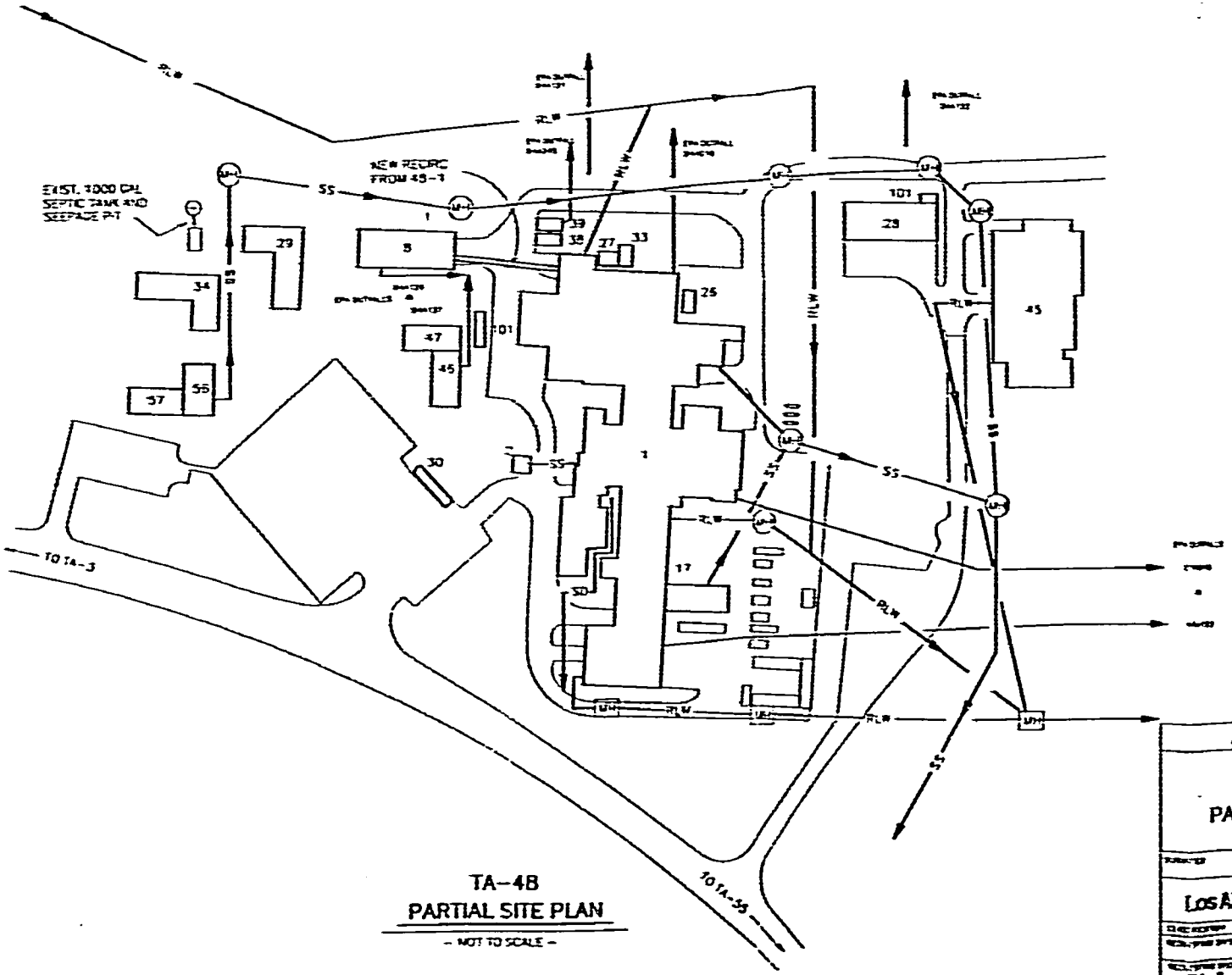

TA-48
PARTIAL SITE PLAN

– NOT TO SCALE –

SANTA FE ENGINEERING, LTD.

TA-48
PARTIAL SITE PLAN

Los Alamos

11056-76

FIGURE 1

NM-8

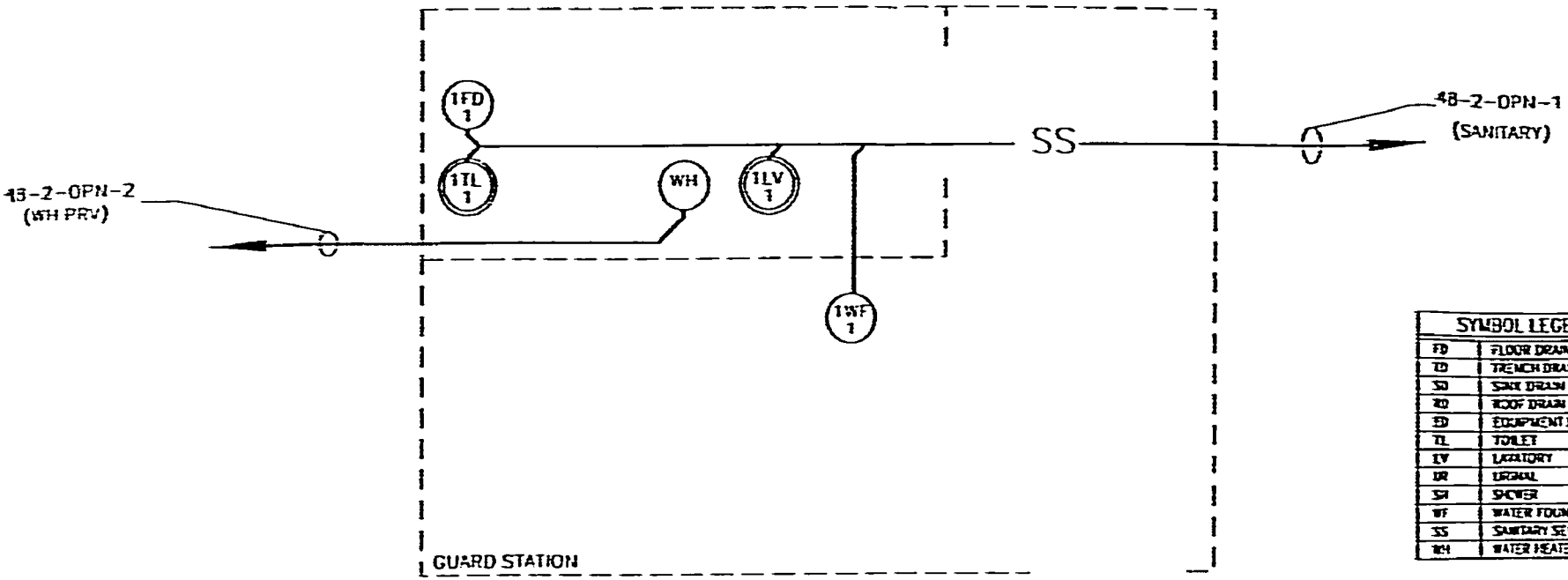

SYMBOL LEGEND	
FD	FLOOR DRAIN
TD	TRENCH DRAIN
SD	SINK DRAIN
RD	ROOF DRAIN
ED	EQUIPMENT DRAIN
TL	TOILET
LV	LAVATORY
DR	DRINKING
SH	SHOWER
WF	WATER FOUNTAIN
SS	SANITARY SEWER
WH	WATER HEATER

DYE TESTED DRAIN

NOTES:
1. BASED ON ENG-R3188 AND SITE VISIT

SANTA FE ENGINEERING, LTD.

TA-48-2
DRAIN SCHEMATIC

Los Alamos National Laboratory
Los Alamos, New Mexico 87545

LAB JOB NO. 11056-76

DRAWING NO. FIGURE 5

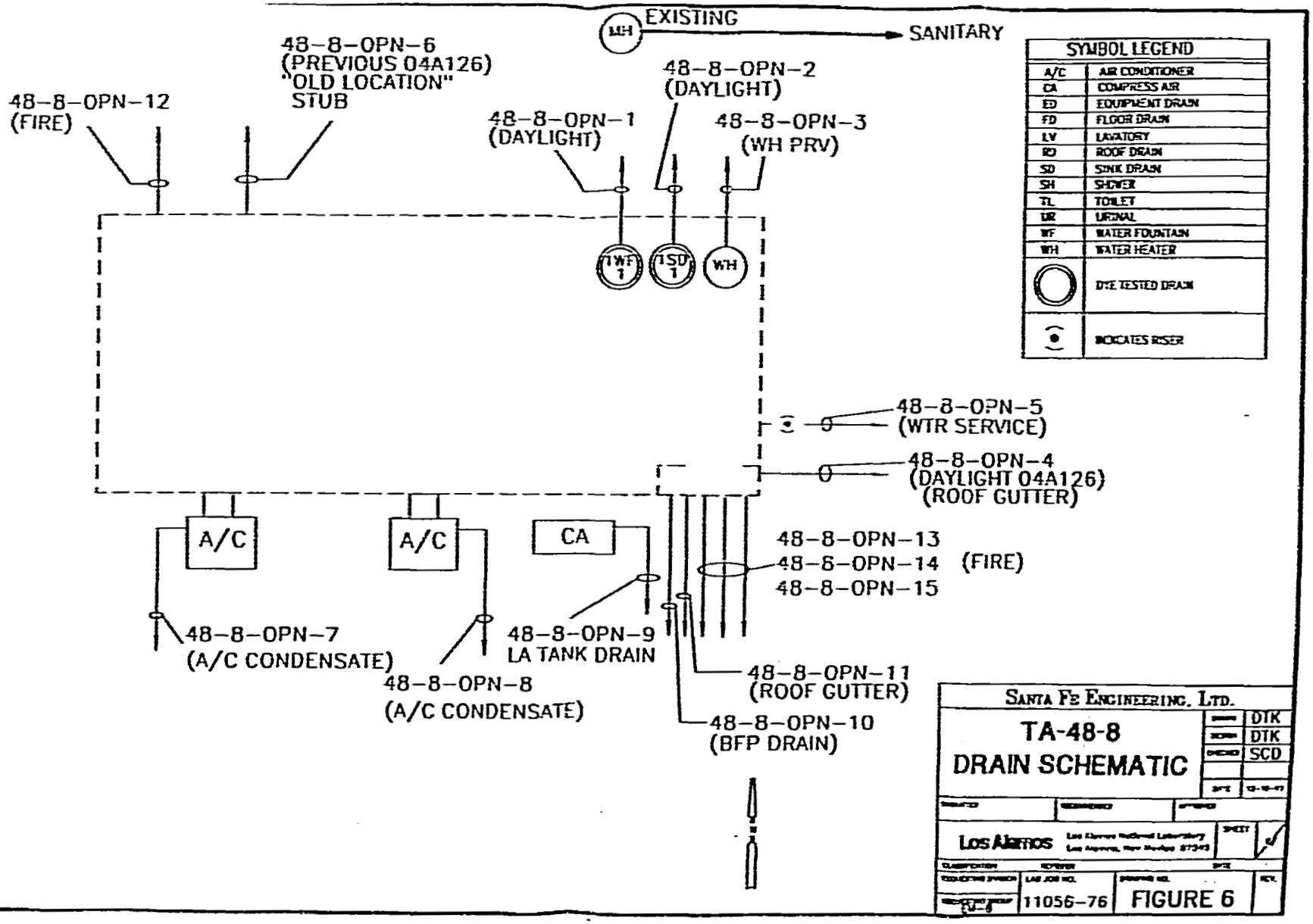
MH
EXISTING
SANITARY
48-8-OPN-6
(PREVIOUS 04A126)
"OLD LOCATION"
STUB
48-8-OPN-12
(FIRE)
48-8-OPN-2
(DAYLIGHT)
48-8-OPN-1
(DAYLIGHT)
48-8-OPN-3
(WH PRV)
WF 1
SD 1
WH
SYMBOL LEGEND
A/C AIR CONDITIONER
CA COMPRESS AIR
ED EQUIPMENT DRAIN
FD FLOOR DRAIN
LV LAVATORY
RD ROOF DRAIN
SD SINK DRAIN
SH SHOWER
TL TOILET
UR URINAL
WF WATER FOUNTAIN
WH WATER HEATER
DYE TESTED DRAIN
INDICATES RISER
48-8-OPN-5
(WTR SERVICE)
48-8-OPN-4
(DAYLIGHT 04A126)
(ROOF GUTTER)
A/C
A/C
CA
48-8-OPN-13
48-8-OPN-14 (FIRE)
48-8-OPN-15
48-8-OPN-7
(A/C CONDENSATE)
48-8-OPN-9
LA TANK DRAIN
48-8-OPN-8
(A/C CONDENSATE)
48-8-OPN-11
(ROOF GUTTER)
48-8-OPN-10
(BFP DRAIN)
SANTA FE ENGINEERING, LTD.
TA-48-8
DRAIN SCHEMATIC
DTK
DTK
SCD
Los Alamos
11056-76
FIGURE 6

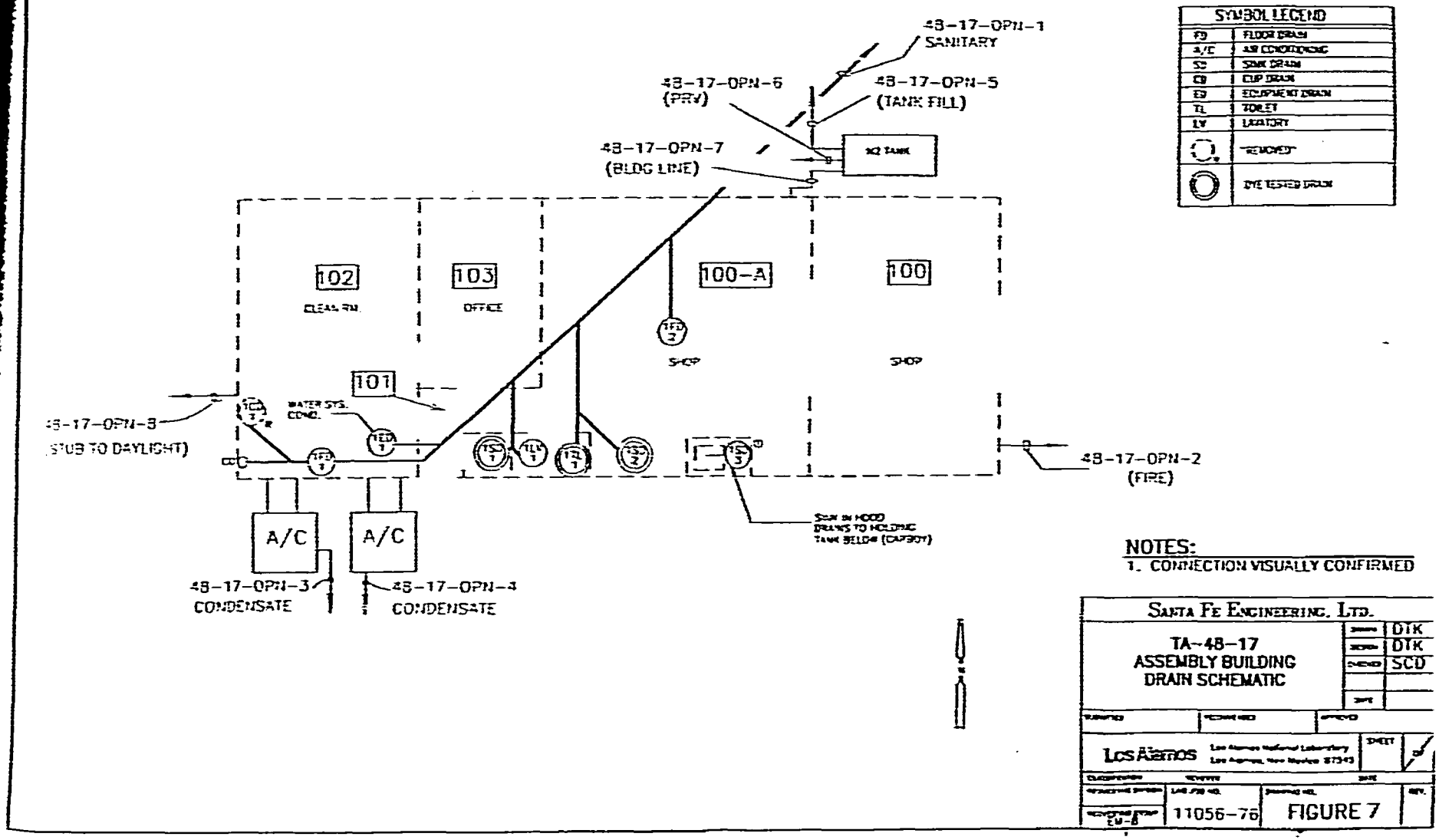

NOTES:
1. CONNECTION VISUALLY CONFIRMED

SANTA FE ENGINEERING, LTD.	
TA-48-17 ASSEMBLY BUILDING DRAIN SCHEMATIC	DRAWN DTK DESIGN DTK CHECKED SCD DATE
LOS ALAMOS	SHEET
LAB JOB NO. 11056-76	DRAWING NO. FIGURE 7

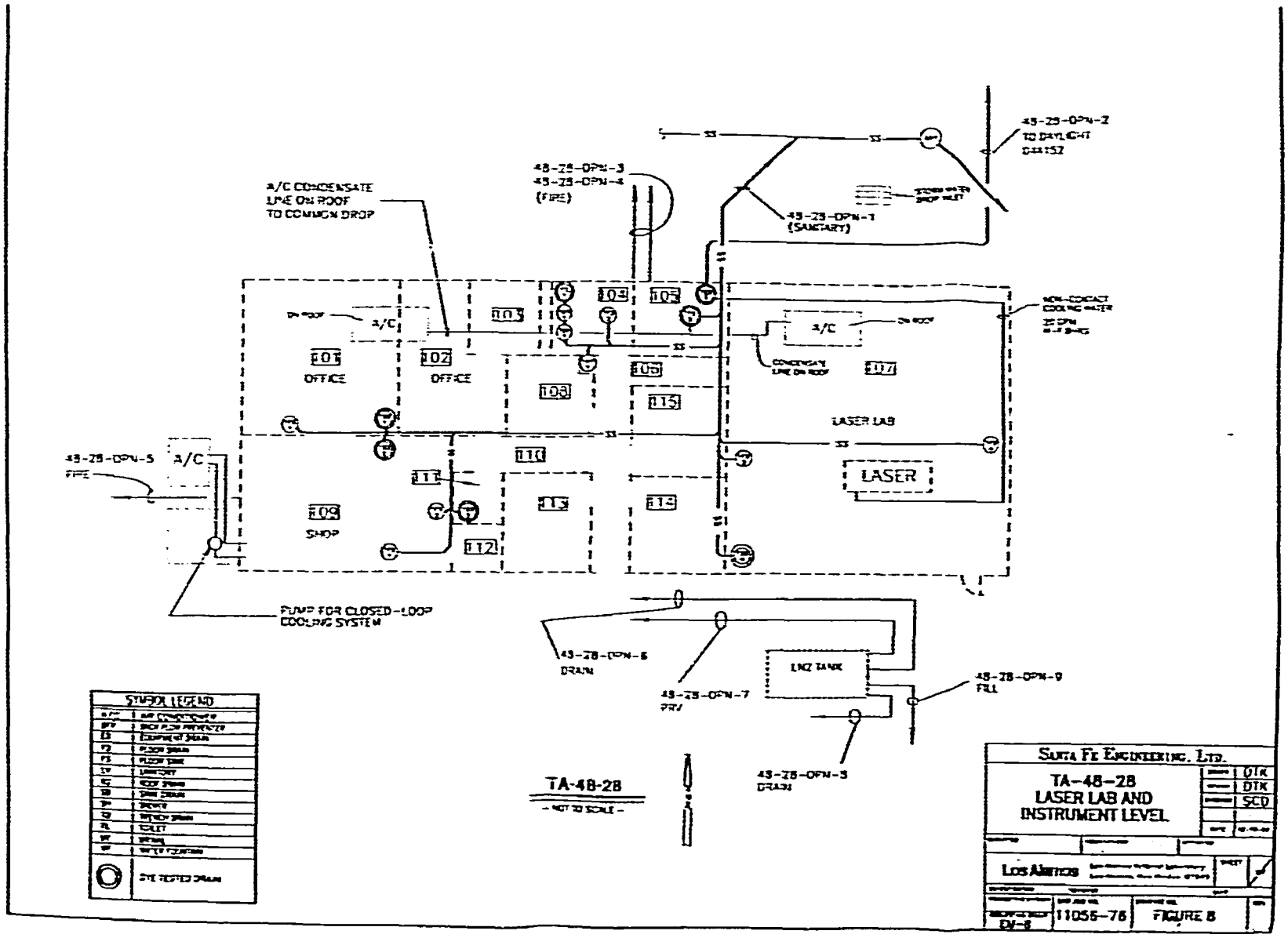
A/C CONDENSATE LINE ON ROOF TO COMMON DROP
48-28-OPN-3
48-28-OPN-4
(FIRE)
48-28-OPN-1
(SANITARY)
48-28-OPN-2
TO DAYLIGHT
A/C
101
OFFICE
102
OFFICE
103
104
105
106
107
108
109
SHOP
110
111
112
113
114
115
LASER LAB
LASER
48-28-OPN-5
FIRE
PUMP FOR CLOSED-LOOP COOLING SYSTEM
48-28-OPN-6
DRAIN
48-28-OPN-7
PRV
LNG TANK
48-28-OPN-9
FILL
48-28-OPN-8
DRAIN
TA-48-28
- NOT TO SCALE -
SYMBOL LEGEND
SITE TESTED DRAIN
SANTA FE ENGINEERING, LTD.
TA-48-28
LASER LAB AND
INSTRUMENT LEVEL
DTK
DTK
SCD
LOS ALAMOS
DV-8
11055-76
FIGURE 8

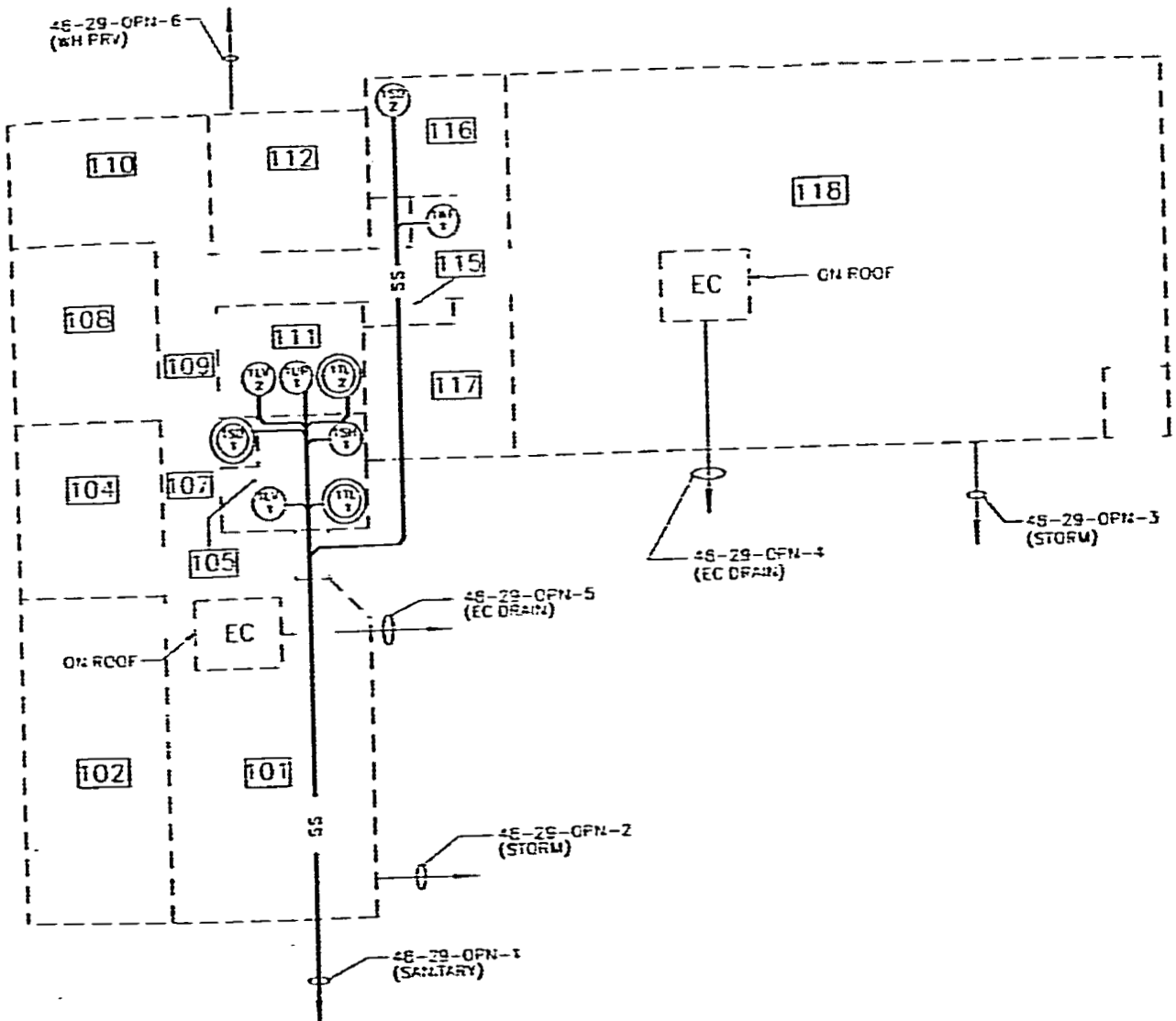

SYMBOL LEGEND

FD	FLOOR DRAIN
RD	ROOF DRAIN
SD	STORM DRAIN
RD	ROOF DRAIN
ED	EQUIPMENT DRAIN
TL	TOILET
LV	LAVATORY
UR	URINAL
SH	SHOWER
WF	WATER FOUNTAIN
SP	SUMP PUMP
	SITE RESTOR DRAIN

SANTA FE ENGINEERING, LTD.

TA-48-29
DRAIN SCHEMATIC

DTK
DTK
SCD

LOS ALAMOS

11056-76

FIGURE 9

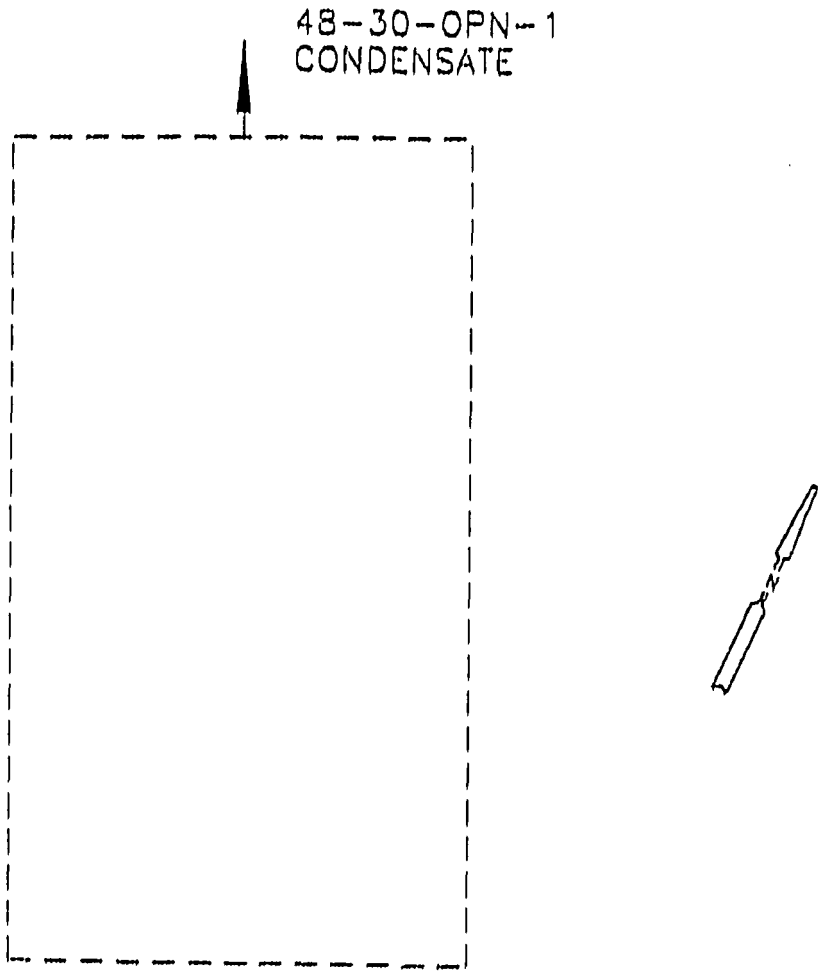

SANTA FE ENGINEERING, LTD.

TA 48-30
DRAIN SCHEMATIC

DRAWN	DRS
DESIGN	DRS
CHECKED	SCD
RELEASED	
DATE	

SUBMITTED	RECOMMENDED	APPROVED

Los Alamos — Los Alamos National Laboratory, Los Alamos, New Mexico 87545

SHEET ___ OF ___

CLASSIFICATION | REVIEWER | DATE

REQUESTING DIVISION	LAB JOB NO.	DRAWING NO.	REV.
REQUESTING GROUP EM-8	11056-76	FIGURE 10	

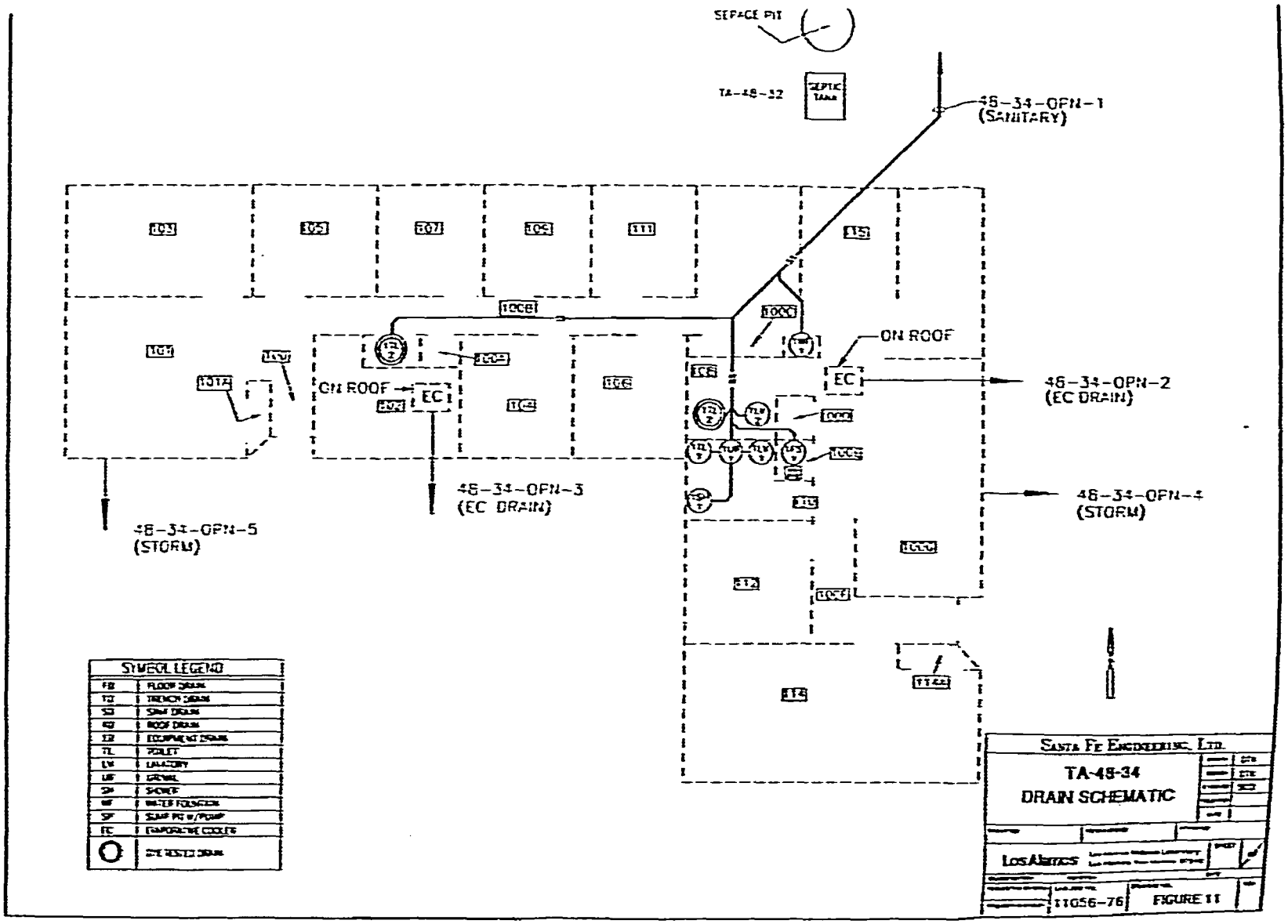
SEPACE PIT
TA-48-32
SEPTIC TANK
48-34-OPN-1
(SANITARY)
103
105
107
109
111
115
104
101A
ON ROOF
EC
48-34-OPN-2
(EC DRAIN)
48-34-OPN-3
(EC DRAIN)
48-34-OPN-4
(STORM)
48-34-OPN-5
(STORM)
SYMBOL LEGEND
SANTA FE ENGINEERING, LTD.
TA-48-34
DRAIN SCHEMATIC
LOS ALAMOS
11056-76
FIGURE 11

Media Place Holder Target

This target represents media that was not microfilmed. The original media can be obtained through the Records Processing Facility.

ER ID # 56204

Box # 183

Record Type: Drawing

Date: —

Symbol: 11056-76

Subject:

TA-48-45 Drain Schematic
Lab job No. 11056-76

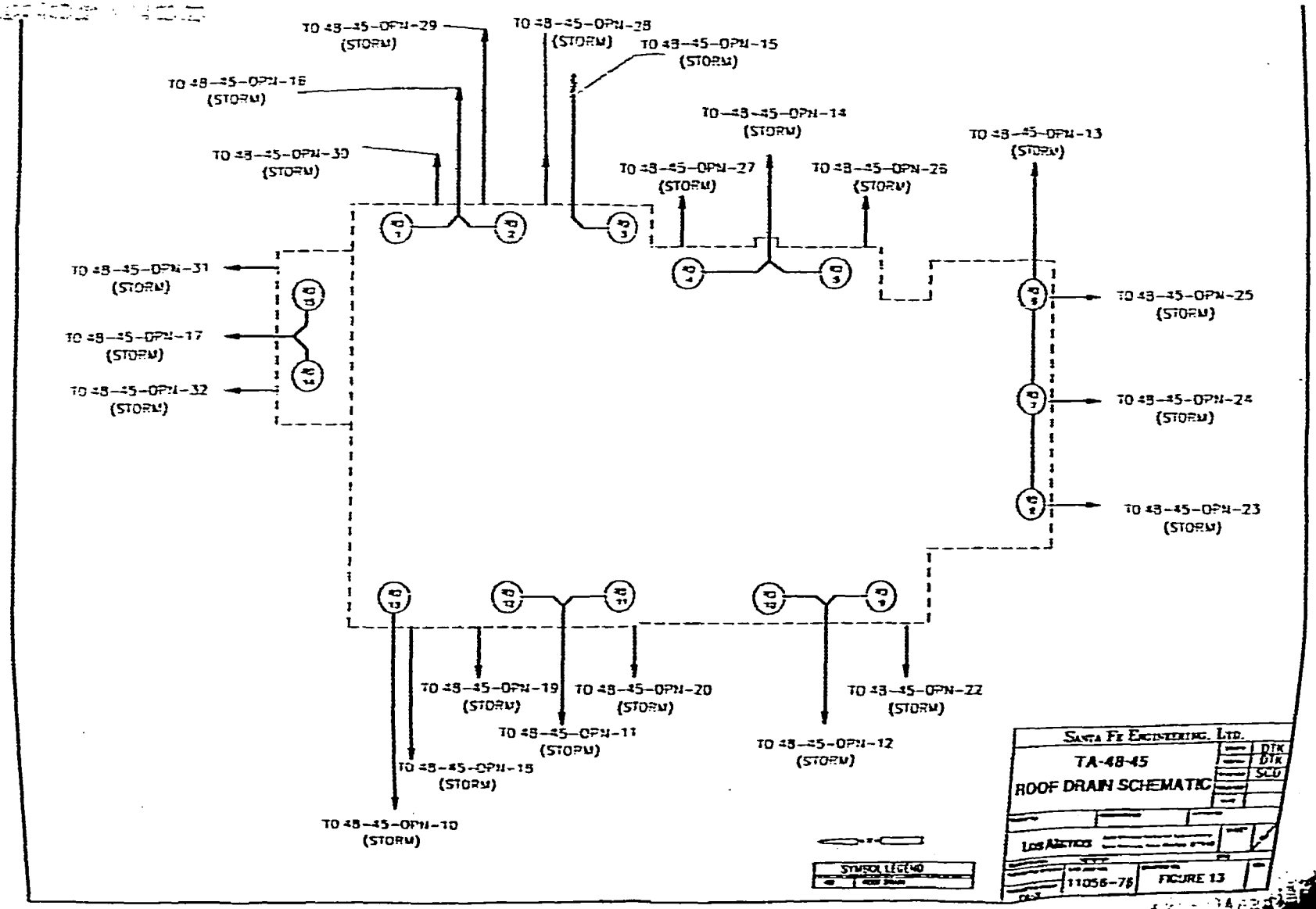
TO 48-45-OPN-29 (STORM)
TO 48-45-OPN-28 (STORM)
TO 48-45-OPN-15 (STORM)
TO 48-45-OPN-16 (STORM)
TO 48-45-OPN-30 (STORM)
TO 48-45-OPN-14 (STORM)
TO 48-45-OPN-13 (STORM)
TO 48-45-OPN-27 (STORM)
TO 48-45-OPN-26 (STORM)
TO 48-45-OPN-31 (STORM)
TO 48-45-OPN-17 (STORM)
TO 48-45-OPN-32 (STORM)
TO 48-45-OPN-25 (STORM)
TO 48-45-OPN-24 (STORM)
TO 48-45-OPN-23 (STORM)
TO 48-45-OPN-19 (STORM)
TO 48-45-OPN-20 (STORM)
TO 48-45-OPN-22 (STORM)
TO 48-45-OPN-11 (STORM)
TO 48-45-OPN-12 (STORM)
TO 48-45-OPN-18 (STORM)
TO 48-45-OPN-10 (STORM)
SYMBOL LEGEND
SANTA FE ENGINEERING, LTD.
TA-48-45
ROOF DRAIN SCHEMATIC
DTK
DTK
SCD
LOS ALAMOS
11056-78
FIGURE 13

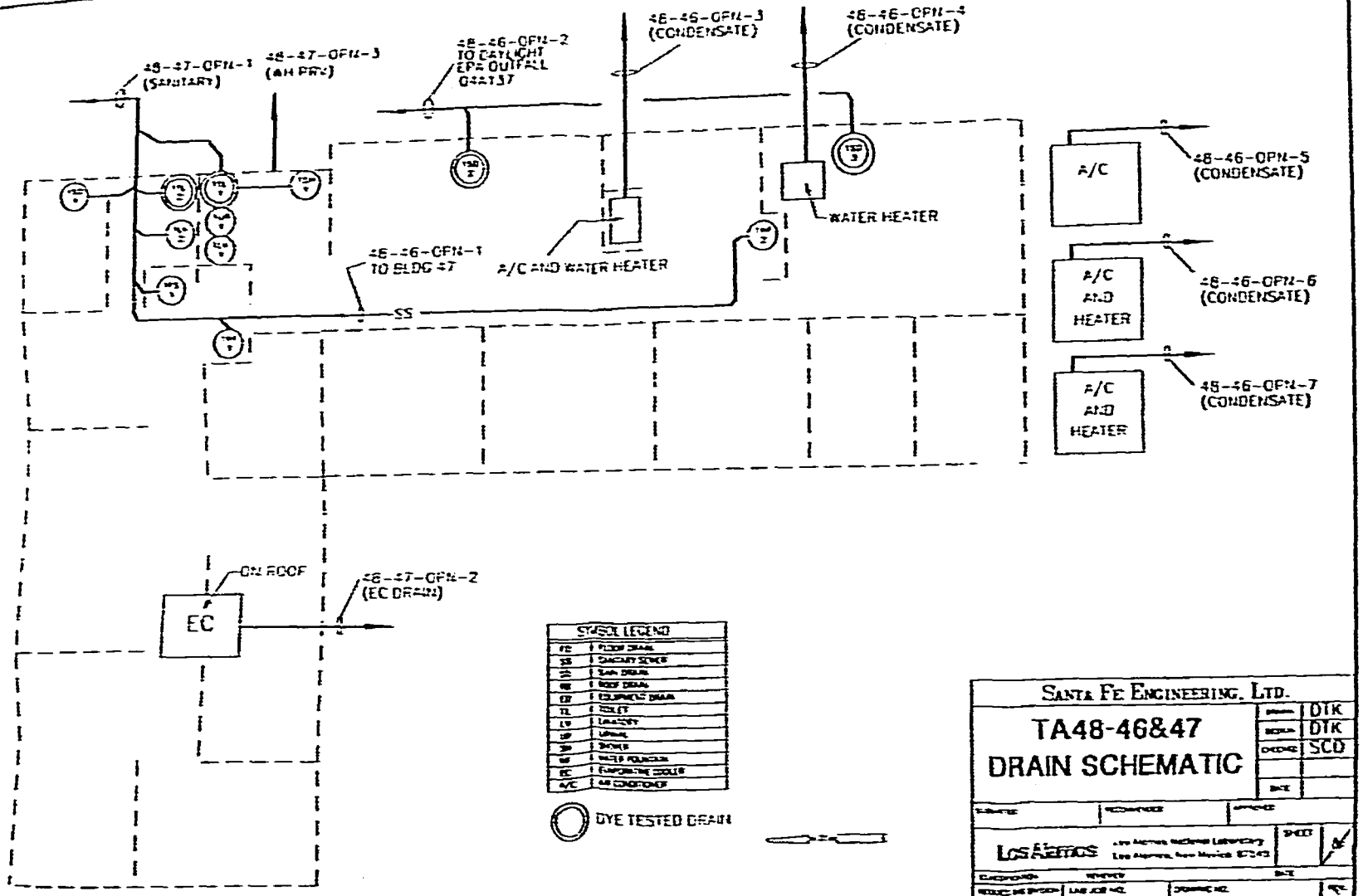
48-47-OFN-1
(SANITARY)
48-47-OFN-3
(AH PRV)
48-46-OFN-2
TO DAYLIGHT
EPA OUTFALL
048737
48-46-OFN-3
(CONDENSATE)
48-46-OFN-4
(CONDENSATE)
48-46-OFN-5
(CONDENSATE)
48-46-OFN-6
(CONDENSATE)
48-46-OFN-7
(CONDENSATE)
A/C
A/C AND HEATER
A/C AND HEATER
WATER HEATER
A/C AND WATER HEATER
48-46-OFN-1
TO SLDG 47
SS
ON ROOF
EC
48-47-OFN-2
(EC DRAIN)
SYMBOL LEGEND
DYE TESTED DRAIN
SANTA FE ENGINEERING, LTD.
TA48-46&47
DRAIN SCHEMATIC
DTK
DTK
SCD
LOS ALAMOS
11056-76
FIGURE 14

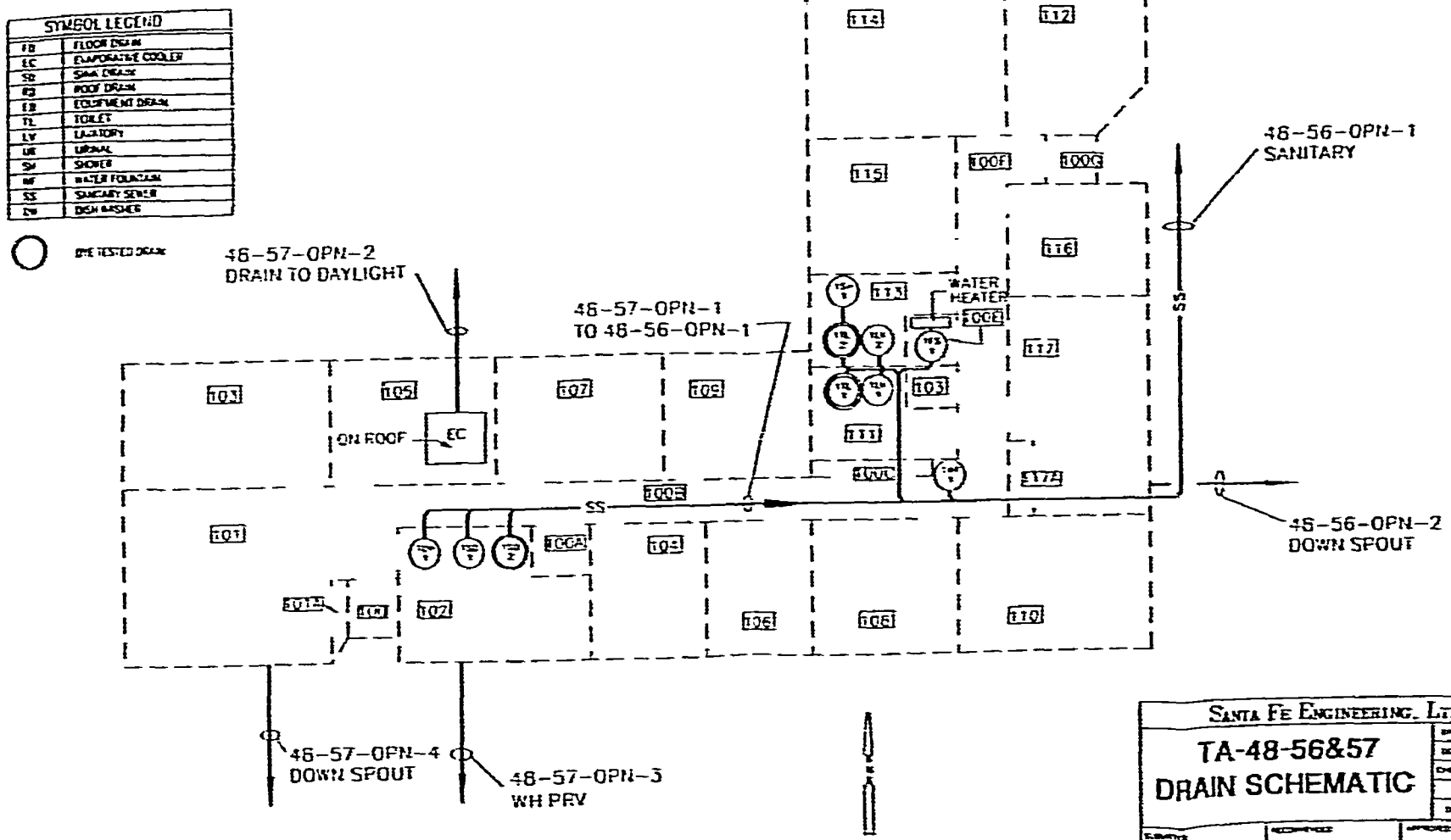

SANTA FE ENGINEERING, LTD.

TA-48-56&57
DRAIN SCHEMATIC

DTK
DTK
SCD

LOS ALAMOS

11056-76

FIGURE 15