U.S. ENVIRONMENTAL PROTECTION AGENCY

EPA HAZARDOUS WASTE PERMIT APPLICATION

Consolidated Permits Program

(This Information is required under Section 3005 of RCRA.)

I. EPA I.D. NUMBER: N M 0 8 9 0 0 1 0 5 1 5 — T/A C: 1

FOR OFFICIAL USE ONLY

APPLICATION APPROVED	DATE RECEIVED (yr., mo., & day)	COMMENTS
		6 Copies

FIRST OR REVISED APPLICATION

Place an "X" in the appropriate box in A or B below *(mark one box only)* to indicate whether this is the first application you are submitting for your facility or a revised application. If this is your first application and you already know your facility's EPA I.D. Number, or if this is a revised application, enter your facility's EPA I.D. Number in Item I above.

FIRST APPLICATION *(place an "X" below and provide the appropriate date)*

☐ 1. EXISTING FACILITY *(See instructions for definition of "existing" facility. Complete item below.)*

FOR EXISTING FACILITIES, PROVIDE THE DATE *(yr., mo., & day)* OPERATION BEGAN OR THE DATE CONSTRUCTION COMMENCED *(use the boxes to the left)*

YR.	MO.	DAY

☐ 2. NEW FACILITY *(Complete item below.)*

FOR NEW FACILITIES, PROVIDE THE DATE *(yr., mo., & day)* OPERATION BEGAN OR IS EXPECTED TO BEGIN

YR.	MO.	DAY

REVISED APPLICATION *(place an "X" below and complete Item I above)*

☒ 1. FACILITY HAS INTERIM STATUS

☐ 2. FACILITY HAS A RCRA PERMIT

II. PROCESSES – CODES AND DESIGN CAPACITIES

PROCESS CODE – Enter the code from the list of process codes below that best describes each process to be used at the facility. Ten lines are provided for entering codes. If more lines are needed, enter the code(s) in the space provided. If a process will be used that is not included in the list of codes below, then describe the process *(including its design capacity)* in the space provided on the form *(Item III-C)*.

PROCESS DESIGN CAPACITY – For each code entered in column A enter the capacity of the process.

1. AMOUNT – Enter the amount.
2. UNIT OF MEASURE – For each amount entered in column B(1), enter the code from the list of unit measure codes below that describes the unit of measure used. Only the units of measure that are listed below should be used.

PROCESS	PROCESS CODE	APPROPRIATE UNITS OF MEASURE FOR PROCESS DESIGN CAPACITY
Storage:		
CONTAINER *(barrel, drum, etc.)*	S01	GALLONS OR LITERS
TANK	S02	GALLONS OR LITERS
WASTE PILE	S03	CUBIC YARDS OR CUBIC METERS
SURFACE IMPOUNDMENT	S04	GALLONS OR LITERS
Disposal:		
INJECTION WELL	D79	GALLONS OR LITERS
LANDFILL	D80	ACRE-FEET *(the volume that would cover one acre to a depth of one foot)* OR HECTARE-METER
LAND APPLICATION	D81	ACRES OR HECTARES
OCEAN DISPOSAL	D82	GALLONS PER DAY OR LITERS PER DAY
SURFACE IMPOUNDMENT	D83	GALLONS OR LITERS

PROCESS	PROCESS CODE	APPROPRIATE UNITS OF MEASURE FOR PROCESS DESIGN CAPACITY
Treatment:		
TANK	T01	GALLONS PER DAY OR LITERS PER DAY
SURFACE IMPOUNDMENT	T02	GALLONS PER DAY OR LITERS PER DAY
INCINERATOR	T03	TONS PER HOUR OR METRIC TONS PER HOUR; GALLONS PER HOUR OR LITERS PER HOUR
OTHER *(Use for physical, chemical, thermal or biological treatment processes not occurring in tanks, surface impoundments or incinerators. Describe the processes in the space provided; Item III-C.)*	T04	GALLONS PER DAY OR LITERS PER DAY

TA - 16, 34, 36, 39, 14, 40, 50

UNIT OF MEASURE	UNIT OF MEASURE CODE	UNIT OF MEASURE	UNIT OF MEASURE CODE	UNIT OF MEASURE	UNIT OF MEASURE CODE
GALLONS	G	LITERS PER DAY	V	ACRE-FEET	A
LITERS	L	TONS PER HOUR	D	HECTARE-METER	F
CUBIC YARDS	Y	METRIC TONS PER HOUR	W	ACRES	B
CUBIC METERS	C	GALLONS PER HOUR	E	HECTARES	Q
GALLONS PER DAY	U	LITERS PER HOUR	H		

EXAMPLE FOR COMPLETING ITEM III *(shown in line numbers X-1 and X-2 below)*: A facility has two storage tanks, one tank can hold 200 gallons and the other can hold 400 gallons. The facility also has an incinerator that can burn up to 20 gallons per hour.

DUP — T/A: C: 1

LINE NUMBER	A. PROCESS CODE (from list above)	B. PROCESS DESIGN CAPACITY 1. AMOUNT (specify)	B. PROCESS DESIGN CAPACITY 2. UNIT OF MEASURE (enter code)	FOR OFFICIAL USE ONLY	LINE NUMBER	A. PROCESS CODE (from list above)	B. PROCESS DESIGN CAPACITY 1. AMOUNT	B. PROCESS DESIGN CAPACITY 2. UNIT OF MEASURE (enter code)	FOR OFFICIAL USE ONLY
X-1	S02	600	G		5	T03	0.15	D	
X-2	T03	20	E		6				
	S01	18320	G		7				
	S80	100	B		8				
	T01	7680	U		9				
	T04	NA (SEC IIIC)			10				

14861

TC

Continued from the front.

III. PROCESSES *(continued)*

C. SPACE FOR ADDITIONAL PROCESS CODE FOR DESCRIBING OTHER PROCESSES *(code " ")*. FOR EACH PROCESS ENTERED HERE INCLUDE DESIGN CAPACITY.

Discrete pieces of High Explosives (HE) waste are collected, packaged, and burned at the TA-16 burning ground. HE contaminated equipment, pipe, etc that have been flash burned at TA-16 have been disposed of at Area P. Two burn pads (388,399) are used to burn the discrete pieces of HE while pad 387 is used to flash the equipment. Two pressure vessels (401,406) are used to burn HE sludge from various processing facilities located at the Laboratory. The sludge is placed on layers of sand in the vessels, the water allowed to drain from the bottom into an evaporation pond and the residue on the sand burned. Sand from burn pads 388 and 399 have been found to be EP toxic for Barium. This sand has in the past been disposed of at Area P. Engineering drawings and location of the sites are included under item V. Design capacities are not applicable as the treatment process is performed on an as-needed basis.

T03

The incinerator at TA-50 Building 37 has been used to burn methanol and ethanol contaminated with transuranic waste. This incinerator was originally built to treat transuranic waste and has been operating since 1979. Mixed waste containing the methanol and ethanol were burned in this incinerator before November 1980.

IV. DESCRIPTION OF HAZARDOUS WASTES

A. EPA HAZARDOUS WASTE NUMBER – Enter the four-digit number from 40 CFR, Subpart D for each listed hazardous waste you will handle. If you handle hazardous wastes which are not listed in 40 CFR, Subpart D, enter the four-digit number*(s)* from 40 CFR, Subpart C that describes the characteristics and/or the toxic contaminants of those hazardous wastes.

B. ESTIMATED ANNUAL QUANTITY – For each **listed waste** entered in column A estimate the quantity of that waste that will be handled on an annual basis. For each **characteristic** or **toxic contaminant** entered in column A estimate the total annual quantity of all the non-listed waste*(s)* that will be handled which possess that characteristic or contaminant.

C. UNIT OF MEASURE – For each quantity entered in column B enter the unit of measure code. Units of measure which must be used and the appropriate codes are:

ENGLISH UNIT OF MEASURE	CODE	METRIC UNIT OF MEASURE	CODE
POUNDS	P	KILOGRAMS	K
TONS	T	METRIC TONS	M

If facility records use any other unit of measure for quantity, the units of measure must be converted into one of the required units of measure taking into account the appropriate density or specific gravity of the waste.

D. PROCESSES

1. PROCESS CODES:
   For listed hazardous waste: For each **listed** hazardous waste entered in column A select the code*(s)* from the list of process codes contained in Item III to indicate how the waste will be stored, treated, and/or disposed of at the facility.
   For non-listed hazardous wastes: For each characteristic or toxic contaminant entered in column A, select the code*(s)* from the list of process codes contained in Item III to indicate **all** the processes that will be used to store, treat, and/or dispose of all the non-listed hazardous wastes that possess that characteristic or toxic contaminant.
   Note: Four spaces are provided for entering process codes. If more are needed: (1) Enter the first three as described above; (2) Enter "000" in the extreme right box of Item IV-D(1); and (3) Enter in the space provided on page 4, the line number and the additional code*(s)*.

2. PROCESS DESCRIPTION: If a code is not listed for a process that will be used, describe the process in the space provided on the form.

NOTE: HAZARDOUS WASTES DESCRIBED BY MORE THAN ONE EPA HAZARDOUS WASTE NUMBER – Hazardous wastes that can be described by more than one EPA Hazardous Waste Number shall be described on the form as follows:

1. Select one of the EPA Hazardous Waste Numbers and enter it in column A. On the same line complete columns B,C, and D by estimating the total annual quantity of the waste and describing all the processes to be used to treat, store, and/or dispose of the waste.
2. In column A of the next line enter the other EPA Hazardous Waste Number that can be used to describe the waste. In column D(2) on that line enter "included with above" and make no other entries on that line.
3. Repeat step 2 for each other EPA Hazardous Waste Number that can be used to describe the hazardous waste.

EXAMPLE FOR COMPLETING ITEM IV *(shown in line numbers X-1, X-2, X-3, and X-4 below)* – A facility will treat and dispose of an estimated 900 pounds per year of chrome shavings from leather tanning and finishing operation. In addition, the facility will treat and dispose of three non-listed wastes. Two wastes are corrosive only and there will be an estimated 200 pounds per year of each waste. The other waste is corrosive and ignitable and there will be an estimated 100 pounds per year of that waste. Treatment will be in an incinerator and disposal will be in a landfill.

LINE NO.	A. EPA HAZARD. WASTE NO. (enter code)	B. ESTIMATED ANNUAL QUANTITY OF WASTE	C. UNIT OF MEASURE (enter code)	D. PROCESSES 1. PROCESS CODES (enter)	D. PROCESSES 2. PROCESS DESCRIPTION (if a code is not entered in D(1))
X-1	K054	900	P	T03 D80	
X-2	D002	400	P	T03 D80	
X-3	D001	100	P	T03 D80	
X-4	D002				included with above

 CONTINUE ON PAGE 3

E: Photocopy this page before completing if you have more than 26 wastes to list. Form Approved OMB No. 158-S80004

EPA I.D. NUMBER (enter from page 1)	FOR OFFICIAL USE ONLY
N M 0 8 9 0 0 1 0 5 1 5 — T/A 1	W — DUP — 2 — DUP

DESCRIPTION OF HAZARDOUS WASTES (continued)

No.	A. EPA HAZARD. WASTE NO. (enter code)	B. ESTIMATED ANNUAL QUANTITY OF WASTE	C. UNIT OF MEASURE (enter code)	D. PROCESSES 1. PROCESS CODES (enter)				2. PROCESS DESCRIPTION (if a code is not entered in D(1))
	D001	50000	P	S01	T03	D80		
2	D002	150000	P	S01		T01	D80	
3	D003	5000	P	S01	T04	D80		
4	D003	5000	P	S01	T03	T01	D80	Lithium Hydride only
5	D004	1000	P	S01	D80			
6	D005	150	Y	D80				Sand from clean out of explosives burn pads.
7	D005	250*	P	S01	D80			
8	D006	250*	P	S01	T01	D80		
9	D007	1000	P	S01	T01	D80		
10	D008	2000	P	S01	D80			
11	D009	1500	P	S01		T01	D80	
	D010	250*	P	S01	D80			
13	D011	250*	P	S01	T01	D80		
14	D012	250*	P	S01	T03	D80		
15	D016	250*	P	S01	T03	D80		
16		END OF D DESIGNATOR						
17								
18								
19								
20								
21								
22								
23								
24								
25								
26								

: Photocopy this page before completing if you have more than 26 wastes to list.

Form Approved OMB No. 158-S80004

EPA I.D. NUMBER (enter from page 1): M 0 8 9 0 0 1 0 5 1 5 | T/A: | C: 1

FOR OFFICIAL USE ONLY: W | DUP | T: 2 | DUP

DESCRIPTION OF HAZARDOUS WASTES (continued)

A. EPA HAZARD. WASTE NO. (enter code)	B. ESTIMATED ANNUAL QUANTITY OF WASTE	C. UNIT OF MEASURE (enter code)	D. PROCESSES 1. PROCESS CODES (enter)				D. PROCESSES 2. PROCESS DESCRIPTION (if a code is not entered in D(1))
F001	1000	P	S01	T03	D80		
F002	1000	P	S01	T03	D80		
F003	250*	P	S01	T03	D80		
F004	250*	P	S01	T03	D80		
F005	250*	P	S01	T03	D80		
F006	250*	P	S01		T01	D80	
F007	12500	P	S01		T01	D80	
F008	1000	P	S01		T01	D80	
F009	6000	P	S01		T01	D80	
F027	700	P	S01	D80	T03		
F028	700	P	D80				
	END OF F DESIGNATOR						

Form 3510-3 (6-80)

CONTINUE ON REVERSE

tinued from page 2.
E: Photocopy this page before completing if you have more than 26 wastes to list.

Form Approved OMB No. 158-S80004

EPA I.D. NUMBER (enter from page 1)	FOR OFFICIAL USE ONLY	
NM089001951 5	W DUP	2 DUP

ESCRIPTION OF HAZARDOUS WASTES (continued)

NO.	A. EPA HAZARD. WASTE NO. (enter code)	B. ESTIMATED ANNUAL QUANTITY OF WASTE	C. UNIT OF MEASURE (enter code)	D. PROCESSES 1. PROCESS CODES (enter)				D. PROCESSES 2. PROCESS DESCRIPTION (if a code is not entered in D(1))
	K044	50000	P	S01		T04	D80	
2	K047	250*	P	S01		T04	D80	
3		END OF K DESIGNATOR						
4								
5								
6								
7								
8								
9								
0								
1								
2								
3								
4								
5								
6								
7								
8								
9								
20								
21								
22								
23								
25								
26								

CONTINUE ON REVERSE

: Photocopy this page before completing if you have more than 26 wastes to list.

Form Approved OMB No. 158-S80004

EPA I.D. NUMBER (enter from page 1)	FOR OFFICIAL USE ONLY	
M 0 8 9 0 0 1 0 5 1 5	W DUP	2 DUP

DESCRIPTION OF HAZARDOUS WASTES (continued)

A. EPA HAZARD. WASTE NO. (enter code)	B. ESTIMATED ANNUAL QUANTITY OF WASTE	C. UNIT OF MEASURE (enter code)	D. PROCESSES 1. PROCESS CODES (enter)				2. PROCESS DESCRIPTION (if a code is not entered in D(1))
P001	250*	P	S01	T03	D80		
P002	250*	P	S01	T03	D80		
P003	250*	P	S01	T03	D80		
P004	250*	P	S01	T03	D80		
P005	250*	P	S01	T03	D80		
P006	250*	P	S01	T04	D80		
P007	250*	P	S01	T03	D80		
P008	250*	P	S01	T03	D80		
P009	250*	P	S01	T04	D80		
P010	250*	P	S01	D80			
P011	250*	P	S01	D80			
P012	250*	P	S01	D80			
P013	250*	P	S01	T01	D80		
P014	250*	P	S01	T03	D80		
P015	6000	P	S01	D80			
P016	250*	P	S01	T03	D80		
P017	250*	P	S01	T03	D80		
P018	250*	P	S01	T03	D80		
P020	250*	P	S01	T03	D80		
P021	250*	P	S01	T01	D80		
P022	250*	P	S01	T04	D80		
P023	250*	P	S01	T03	D80		
P024	250*	P	S01	T03	D80		
P026	250*	P	S01	T03	D80		
P027	250*	P	S01	T03	D80		
P028	250*	P	S01	T03	D80		

EPA I.D. NUMBER (enter from page 1) | FOR OFFICIAL USE ONLY

EPA I.D. NUMBER	T/A/C	FOR OFFICIAL USE ONLY	T/A/C	
M 0 8 9 0 0 1 0 5 1 5	1	W DUP		DUP

DESCRIPTION OF HAZARDOUS WASTES (continued)

A. EPA HAZARD. WASTE NO. (enter code)	B. ESTIMATED ANNUAL QUANTITY OF WASTE	C. UNIT OF MEASURE (enter code)	D. PROCESSES 1. PROCESS CODES (enter)				D. PROCESSES 2. PROCESS DESCRIPTION (if a code is not entered in D(1))
P 0 2 9	250*	P	S 0 1		T 0 1	D 8 0	
P 0 3 0	250*	P	S 0 1	T 0 1	D 8 0		
P 0 3 1	250*	P	S 0 1	T 0 4	D 8 0		
P 0 3 3	250*	P	S 0 1	T 0 4	D 8 0		
P 0 3 4	250*	P	S 0 1	T 0 3	D 8 0		
P 0 3 6	250*	P	S 0 1	T 0 3	D 8 0		
P 0 3 7	250*	P	S 0 1	T 0 3	D 8 0		
P 0 3 8	250*	P	S 0 1	T 0 3	D 8 0		
P 0 3 9	250*	P	S 0 1	T 0 3	D 8 0		
P 0 4 0	250*	P	S 0 1	T 0 3	D 8 0		
P 0 4 1	250*	P	S 0 1	T 0 3	D 8 0		
P 0 4 2	250*	P	S 0 1	T 0 3	D 8 0		
P 0 4 3	250*	P	S 0 1	T 0 3	D 8 0		
P 0 4 4	250*	P	S 0 1	T 0 3	D 8 0		
P 0 4 5	250*	P	S 0 1	T 0 3	D 8 0		
P 0 4 6	250*	P	S 0 1	T 0 3	D 8 0		
P 0 4 7	250*	P	S 0 1	T 0 3	D 8 0		
P 0 4 8	250*	P	S 0 1	T 0 3	T 0 4	D 8 0	
P 0 4 9	250*	P	S 0 1	T 0 3	D 8 0		
P 0 5 0	250*	P	S 0 1	T 0 3	D 8 0		
P 0 5 1	250*	P	S 0 1	T 0 3	D 8 0		
P 0 5 4	250*	P	S 0 1	T 0 3	T 0 4	D 8 0	
P 0 5 6	250*	P	S 0 1	T 0 1	T 0 4	D 8 0	
P 0 5 7	250*	P	S 0 1	T 0 3	D 8 0		
P 0 5 8	250*	P	S 0 1	T 0 3	D 8 0		
P 0 5 9	250*	P	S 0 1	T 0 3	D 8 0		

Photocopy this page before completing if you have more than 26 wastes to list. Form Approved OMB No. 158-S80004

EPA I.D. NUMBER (enter from page 1): M 0 8 9 0 0 1 0 5 1 5 | T/A 1 | C

FOR OFFICIAL USE ONLY: W DUP | T 2 DUP

DESCRIPTION OF HAZARDOUS WASTES (continued)

A. EPA HAZARD. WASTE NO. (enter code)	B. ESTIMATED ANNUAL QUANTITY OF WASTE	C. UNIT OF MEASURE (enter code)	D. PROCESSES 1. PROCESS CODES (enter)				2. PROCESS DESCRIPTION (if a code is not entered in D(1))
P060	250*	P	S01	T03	D80		
P062	250*	P	S01	T03	D80		
P063	250*	P	S01	T04	D80		
P064	250*	P	S01	T04	D80		
P065	250*	P	S01	T04	D80		
P066	250*	P	S01	T03	D80		
P067	250*	P	S01	T03	D80		
P068	250*	P	S01	T03	D80		
P069	250*	P	S01	T03	T04	D80	
P070	250*	P	S01	T03	D80		
P071	250*	P	S01	T03	T04	D80	
P072	250*	P	S01	T03	D80		
P073	250*	P	S01	T01	T04	D80	
P074	250*	P	S01		T01	D80	
P075	250*	P	S01	T03	D80		
P076	250*	P	S01	T01	T04	D80	
P077	250*	P	S01	T03	T04	D80	
P078	250*	P	S01	T01	D80		
P081	250*	P	S01	T04	D80		
P082	250*	P	S01	T03	D80		
P084	250*	P	S01	T03	D80		
P085	250*	P	S01	T03	D80		
P087	250*	P	S01	D80			
P088	250*	P	S01	T03	D80		
P089	250*	P	S01	T03	D80		
P092	250*	P	S01	T03	D80		

Form 3510-3 (6-80)

CONTINUE ON REVERSE

E: Photocopy this page before completing if you have more than 26 wastes to list. Form Approved OMB No. 158-S80004

EPA I.D. NUMBER (enter from page 1): N M 0 8 9 0 0 1 0 5 1 5 | T/A | C 1

FOR OFFICIAL USE ONLY: W DUP | C 2 DUP

DESCRIPTION OF HAZARDOUS WASTES (continued)

O Z	A. EPA HAZARD. WASTE NO. (enter code)	B. ESTIMATED ANNUAL QUANTITY OF WASTE	C. UNIT OF MEASURE (enter code)	D. PROCESSES 1. PROCESS CODES (enter)				2. PROCESS DESCRIPTION (if a code is not entered in D(1))
	P093	250*	P	S01	T03	D80		
2	P094	250*	P	S01	T03	D80		
3	P095	250*	P	S01	T03	D80		
4	P096	250*	P	S01	T04	D80		
5	P097	250*	P	S01	T03	D80		
6	P098	250*	P	S01	T01	D80		
7	P099	250*	P	S01	T01	D80		
8	P101	250*	P	S01	T03	D80		
9	P102	250*	P	S01	T03	D80		
0	P103	250*	P	S01	T03	D80		
1	P104	250*	P	S01	T01	D80		
-	P105	250*	P	S01	D80			
3	P106	250*	P	S01	T01	D80		
4	P107	250*	P	S01	T04	D80		
5	P108	250*	P	S01	T03	D80		
6	P109	250*	P	S01	T03	D80		
7	P110	250*	P	S01	T03	D80		
8	P111	250*	P	S01	T03	D80		
9	P112	250*	P	S01	T03	T04	D80	
20	P113	250*	P	S01	D80			
21	P114	250*	P	S01	D80			
22	P115	250*	P	S01	D80			
23	P116	250*	P	S01	D80			
	P118	250*	P	S01	T03	D80		
25	P119	250*	P	S01	D80			
26	P120	250*	P	S01	D80			

nued from page 2.
E: Photocopy this page before completing if you have more than 26 wastes to list.

Form Approved OMB No. 158-S80004

EPA I.D. NUMBER (enter from page 1): N M 0 8 9 0 0 1 0 5 1 5 — T/A: 1

FOR OFFICIAL USE ONLY: W DUP — T/A: 2 DUP

DESCRIPTION OF HAZARDOUS WASTES (continued)

	A. EPA HAZARD. WASTE NO. (enter code)	B. ESTIMATED ANNUAL QUANTITY OF WASTE	C. UNIT OF MEASURE (enter code)	D. PROCESSES 1. PROCESS CODES (enter)				2. PROCESS DESCRIPTION (if a code is not entered in D(1))
	P 1 2 1	250*	P	S 0 1	T 0 1	D 8 0		
	P 1 2 2	250*	P	S 0 1	T 0 4	D 8 0		
	P 1 2 3	250*	P	S 0 1	T 0 3	D 8 0		
		END OF P DESIGNATOR						
0								
1								
3								
4								
5								
6								
7								
8								
9								
20								
21								
22								
23								
25								
26								

inued from page 2.

E: Photocopy this page before completing if you have more than 26 wastes to list.

Form Approved OMB No. 158-S80004

EPA I.D. NUMBER (enter from page 1)	FOR OFFICIAL USE ONLY
N M 0 8 9 0 0 1 0 5 1 5 — C 1	W — DUP — C 2 — DUP

DESCRIPTION OF HAZARDOUS WASTES (continued)

O Z	A. EPA HAZARD. WASTE NO. (enter code)	B. ESTIMATED ANNUAL QUANTITY OF WASTE	C. UNIT OF MEASURE (enter code)	D. PROCESSES 1. PROCESS CODES (enter)				2. PROCESS DESCRIPTION (if a code is not entered in D(1))
	U001	250*	P	S01	T03	D80		
2	U002	1000	P	S01	T03	D80		
3	U003	250*	P	S01	T03	D80		
4	U004	250*	P	S01	T03	D80		
5	U005	250*	P	S01	D80			
6	U006	250*	P	S01	T04	D80		
7	U007	250*	P	S01	T03	D80		
8	U008	250*	P	S01	T03	T04	D80	
9	U009	250*	P	S01	T03	D80		
0	U010	250*	P	S01	T03	D80		
1	U011	250*	P	S01	T03	D80		
--	U012	250*	P	S01	T03	D80		
13	U014	250*	P	S01	T03	D80		
14	U015	250*	P	S01	T03	D80		
15	U016	250*	P	S01	T03	D80		
16	U017	250*	P	S01	T03	D80		
17	U018	250*	P	S01	T03	D80		
18	U019	250*	P	S01	D80			
19	U020	250*	P	S01	T03	T04	D80	
20	U021	250*	P	S01	T03	D80		
21	U022	250*	P	S01	T03	D80		
22	U023	250*	P	S01	T03	T04	D80	
23	U024	250*	P	S01	T03	D80		
-	U025	250*	P	S01	T03	D80		
25	U026	250*	P	S01	T03	D80		
26	U027	250*	P	S01	T03	D80		

CONTINUE ON REVERSE

nued from page 2.
E: Photocopy this page before completing if you have more than 26 wastes to list.

Form Approved OMB No. 158-S80004

EPA I.D. NUMBER (enter from page 1): N M 0 8 9 0 0 1 0 5 1 5 — T/A/C: 1

FOR OFFICIAL USE ONLY: W DUP — C: 2 DUP

DESCRIPTION OF HAZARDOUS WASTES (continued)

	A. EPA HAZARD. WASTE NO. (enter code)	B. ESTIMATED ANNUAL QUANTITY OF WASTE	C. UNIT OF MEASURE (enter code)	D. PROCESSES 1. PROCESS CODES (enter)				2. PROCESS DESCRIPTION (if a code is not entered in D(1))
	U028	250*	P	S01	T03	D80		
	U029	250*	P	S01	T03	D80		
	U030	250*	P	S01	T03	D80		
	U031	250*	P	S01	T03	D80		
	U032	250*	P	S01	T01	D80		
	U033	250*	P	S01	T04	D80		
	U034	250*	P	S01	T03	D80		
	U035	250*	P	S01	T03	D80		
	U036	250*	P	S01	T03	D80		
0	U037	250*	P	S01	T03	D80		
1	U038	250*	P	S01	T03	D80		
-	U039	250*	P	S01	T03	D80		
3	U041	250*	P	S01	T03	D80		
4	U042	250*	P	S01	T03	T04	D80	
5	U043	250*	P	S01	T04	D80		
6	U044	1000	P	S01	T03	D80		
7	U045	250*	P	S01	T04	D80		
8	U046	250*	P	S01	T03	D80		
9	U047	250*	P	S01	T03	D80		
0	U048	250*	P	S01	T03	D80		
1	U049	250*	P	S01	T03	D80		
2	U050	250*	P	S01	T03	D80		
3	U051	250*	P	S01	T03	D80		
	U052	250*	P	S01	T03	D80		
5	U053	250*	P	S01	T03	D80		
6	U055	250*	P	S01	T03	D80		

EPA I.D. NUMBER (enter from page 1): M D 0 8 9 0 0 1 0 5 1 5 — F/A: 1

FOR OFFICIAL USE ONLY: W DUP DUP

DESCRIPTION OF HAZARDOUS WASTES (continued)

	A. EPA HAZARD. WASTE NO. (enter code)	B. ESTIMATED ANNUAL QUANTITY OF WASTE	C. UNIT OF MEASURE (enter code)	D. PROCESSES 1. PROCESS CODES (enter)				2. PROCESS DESCRIPTION (if a code is not entered in D(1))
	U056	250*	P	S01	T03	D80		
	U057	250*	P	S01	T03	D80		
	U058	250*	P	S01	T03	D80		
	U059	250*	P	S01	T03	D80		
	U060	250*	P	S01	T03	D80		
	U061	250*	P	S01	T03	D80		
	U062	250*	P	S01	T03	D80		
	U063	250*	P	S01	T03	D80		
	U064	250*	P	S01	T03	D80		
0	U066	250*	P	S01	T03	D80		
1	U067	250*	P	S01	T03	D80		
	J068	250*	P	S01	T03	D80		
3	U069	250*	P	S01	T03	D80		
4	U070	250*	P	S01	T03	D80		
5	U071	250*	P	S01	T03	D80		
6	U072	250*	P	S01	T03	D80		
7	U073	250*	P	S01	T03	D80		
8	U074	250*	P	S01	T03	D80		
9	U075	250*	P	S01	T04	D80		
0	U076	250*	P	S01	T03	D80		
1	U077	250*	P	S01	T03	D80		
22	U078	250*	P	S01	T03	D80		
23	U079	250*	P	S01	T03	D80		
24	U080	3000	P	S01	T03	D80		
-	U081	250*	P	S01	T03	D80		
26	U082	250*	P	S01	T03	D80		

EPA Form 3510-3 (6-80)

CONTINUE ON REVERSE

(enter "A", "B", "C", etc. behind the "3" to identify photocopied pages)

nued from page 2.

E: Photocopy this page before completing if you have more than 26 wastes to list.

Form Approved OMB No. 158-S80004

EPA I.D. NUMBER (enter from page 1): N M 0 8 9 0 0 1 0 5 1 5 — T/A: 1

FOR OFFICIAL USE ONLY: W — DUP — C: 2 — DUP

DESCRIPTION OF HAZARDOUS WASTES (continued)

	A. EPA HAZARD. WASTE NO. (enter code)	B. ESTIMATED ANNUAL QUANTITY OF WASTE	C. UNIT OF MEASURE (enter code)	D. PROCESSES 1. PROCESS CODES (enter)				2. PROCESS DESCRIPTION (if a code is not entered in D(1))
	U083	250*	P	S01	T03	D80		
	U084	250*	P	S01	T03	D80		
	U085	250*	P	S01	T03	D80		
	U086	250*	P	S01	T03	D80		
	U087	250*	P	S01	T03	D80		
	U088	250*	P	S01	T03	D80		
	U089	250*	P	S01	T03	D80		
	U090	250*	P	S01	T03	D80		
	U091	250*	P	S01	T03	D80		
0	U092	250*	P	S01	T04	D80		
1	U093	250*	P	S01	T03	D80		
-	U094	250*	P	S01	T03	D80		
3	U095	250*	P	S01	T03	D80		
4	U096	250*	P	S01	T03	T04	D80	
5	U097	250*	P	S01	T03	D80		
6	U098	250*	P	S01	T03	D80		
7	U099	250*	P	S01	T03	D80		
8	U101	250*	P	S01	T03	D80		
9	U102	250*	P	S01	T03	D80		
0	U103	250*	P	S01	T03	D80		
1	U105	250*	P	S01	T03	D80		
2	U106	250*	P	S01	T03	D80		
3	U107	250*	P	S01	T03	D80		
	U108	250*	P	S01	T03	T04	D80	
5	U109	250*	P	S01	T03		D80	
6	U110	250*	P	S01	T03	D80		

ntinued from page 2.
TE: Photocopy this page before completing if you have more than 26 wastes to list.

Form Approved OMB No. 158-S80004

EPA I.D. NUMBER (enter from page 1)	FOR OFFICIAL USE ONLY
N M 0 8 9 0 0 1 0 5 1 5 T/A C 1	W DUP C 2 DUP

V. DESCRIPTION OF HAZARDOUS WASTES (continued)

LINE NO.	A. EPA HAZARD. WASTE NO. (enter code)	B. ESTIMATED ANNUAL QUANTITY OF WASTE	C. UNIT OF MEASURE (enter code)	D. PROCESSES 1. PROCESS CODES (enter)				2. PROCESS DESCRIPTION (if a code is not entered in D(1))
1	U 1 1 1	250*	P	S 0 1	T 0 3	D 8 0		
2	U 1 1 2	250*	P	S 0 1	T 0 3	T 0 4	D 8 0	
3	U 1 1 3	250*	P	S 0 1	T 0 3	T 0 4	D 8 0	
4	U 1 1 4	250*	P	S 0 1	T 0 3	D 8 0		
5	U 1 1 5	250*	P	S 0 1	T 0 3	T 0 4	D 8 0	
6	U 1 1 6	250*	P	S 0 1	T 0 3	D 8 0		
7	U 1 1 7	250*	P	S 0 1	T 0 3	T 0 4	D 8 0	
8	U 1 1 8	250*	P	S 0 1	T 0 3	T 0 4	D 8 0	
9	U 1 1 9	250*	P	S 0 1	T 0 3	D 8 0		
10	U 1 2 0	250*	P	S 0 1	T 0 3	D 8 0		
11	U 1 2 1	250*	P	S 0 1	D 8 0			
-	U 1 2 2	250*	P	S 0 1	T 0 3	D 8 0		
13	U 1 2 3	250*	P	S 0 1	D 8 0			
14	U 1 2 4	250*	P	S 0 1	T 0 3	D 8 0		
15	U 1 2 5	250*	P	S 0 1	T 0 3	D 8 0		
16	U 1 2 6	250*	P	S 0 1	T 0 3	D 8 0		
17	U 1 2 7	250*	P	S 0 1	T 0 3	D 8 0		
18	U 1 2 8	250*	P	S 0 1	T 0 3	D 8 0		
19	U 1 2 9	250*	P	S 0 1	T 0 3	D 8 0		
20	U 1 3 0	250*	P	S 0 1	T 0 3	D 8 0		
21	U 1 3 1	250*	P	S 0 1	T 0 3	D 8 0		
22	U 1 3 2	250*	P	S 0 1	T 0 3	D 8 0		
23	U 1 3 3	250*	P	S 0 1	T 0 3	T 0 4	D 8 0	
-	U 1 3 4	250*	P	S 0 1	T 0 1	T 0 4	D 8 0	
25	U 1 3 5	250*	P	S 0 1	T 0 4	D 8 0		
26	U 1 3 6	250*	P	S 0 1	D 8 0			

EPA I.D. NUMBER (enter from page 1): N M 0 8 9 0 0 1 0 5 1 5 — F/A C: 1

FOR OFFICIAL USE ONLY: W DUP — F/A C: 2 DUP

DESCRIPTION OF HAZARDOUS WASTES (continued)

	A. EPA HAZARD. WASTE NO. (enter code)	B. ESTIMATED ANNUAL QUANTITY OF WASTE	C. UNIT OF MEASURE (enter code)	D. PROCESSES 1. PROCESS CODES (enter)				2. PROCESS DESCRIPTION (if a code is not entered in D(1))
1	U137	250*	P	S01	T03	D80		
2	U138	250*	P	S01	T03	D80		
3	U139	250*	P	S01	T03	D80		
4	U140	250*	P	S01	T03	D80		
5	U141	250*	P	S01	T03	D80		
6	U142	250*	P	S01	T03	D80		
7	U143	250*	P	S01	T03	D80		
8	U144	250*	P	S01	D80			
9	U145	250*	P	S01	D80			
10	U146	250*	P	S01	D80			
11	U147	250*	P	S01	T03	D80		
12	U148	250*	P	S01	T03	D80		
13	U149	250*	P	S01	T03	D80		
14	U150	250*	P	S01	T03	D80		
15	U151	250*	P	S01	D80			
16	U152	250*	P	S01	T03	D80		
17	U153	250*	P	S01	T03	D80		
18	U154	250*	P	S01	T03	D80		
19	U155	250*	P	S01	T03	D80		
20	U156	250*	P	S01	T03	D80		
21	U157	1000	P	S01	T03	D80		
22	U158	250*	P	S01	T03	D80		
23	U159	1000	P	S01	T03	D80		
24	U160	250*	P	S01	T04	D80	T03	
25	U161	250*	P	S01	T03	D80		
26	U162	250*	P	S01	T03	D80		

EPA Form 3510-3 (6-80)

CONTINUE ON REVERSE

nued from page 2.
E: Photocopy this page before completing if you have more than 26 wastes to list.

Form Approved OMB No. 158-S80004

EPA I.D. NUMBER (enter from page 1): N M 0 8 9 0 0 1 0 5 1 5 — T/A: C: 1

FOR OFFICIAL USE ONLY: W DUP — C: 2 DUP

DESCRIPTION OF HAZARDOUS WASTES (continued)

	A. EPA HAZARD. WASTE NO. (enter code)	B. ESTIMATED ANNUAL QUANTITY OF WASTE	C. UNIT OF MEASURE (enter code)	D. PROCESSES 1. PROCESS CODES (enter)				D. PROCESSES 2. PROCESS DESCRIPTION (if a code is not entered in D(1))
	U163	250*	P	S01	T03	D80		
	U164	250*	P	S01	T03	D80		
	U165	250*	P	S01	T03	D80		
	U166	250*	P	S01	T03	D80		
	U167	250*	P	S01	T03	D80		
	U168	250*	P	S01	T03	D80		
	U169	250*	P	S01	T03	D80		
	U170	250*	P	S01	T03	D80		
	U171	250*	P	S01	T03	T04	D80	
0	U172	250*	P	S01	T03	D80		
1	U173	250*	P	S01	T03	D80		
2	U174	250*	P	S01	T03	D80		
3	U176	250*	P	S01	T03	D80		
4	U177	250*	P	S01	T03	D80		
5	U178	250*	P	S01	T03	D80		
6	U179	250*	P	S01	T03	D80		
7	U180	250*	P	S01	T03	D80		
8	U181	250*	P	S01	T03	D80		
9	U182	250*	P	S01	T03	D80		
0	U183	250*	P	S01	T03	D80		
1	U184	250*	P	S01	T03	D80		
2	U185	250*	P	S01	T03	D80		
3	U186	250*	P	S01	T03	D80		
	U187	250*	P	S01	T03	D80		
25	U188	250*	P	S01	T03	D80		
26	U189	250*	P	S01	T03	T04	D80	

CONTINUE ON REVERSE

ued from page 2.
: Photocopy this page before completing if you have more than 26 wastes to list.

Form Approved OMB No. 158-S80004

EPA I.D. NUMBER (enter from page 1): M 0 8 9 0 0 1 0 5 1 5 — T/A: C: 1

FOR OFFICIAL USE ONLY: W — DUP — T: 2 — DUP

DESCRIPTION OF HAZARDOUS WASTES (continued)

A. EPA HAZARD. WASTE NO. (enter code)	B. ESTIMATED ANNUAL QUANTITY OF WASTE	C. UNIT OF MEASURE (enter code)	D. PROCESSES 1. PROCESS CODES (enter)				D. PROCESSES 2. PROCESS DESCRIPTION (if a code is not entered in D(1))
U190	250*	P	S01	T03	D80		
U191	250*	P	S01	T03	D80		
U192	250*	P	S01	T03	D80		
U193	250*	P	S01	T03	D80		
U194	250*	P	S01	T03	D80		
U196	250*	P	S01	T03	D80		
U197	250*	P	S01	T03	D80		
U200	250*	P	S01	T03	D80		
U201	250*	P	S01	T03	D80		
U202	250*	P	S01	T03	D80		
U203	250*	P	S01	T03	D80		
U204	250*	P	S01	D80			
U205	250*	P	S01	T04	D80		
U206	250*	P	S01	T03	D80		
U207	250*	P	S01	T03	D80		
U208	250*	P	S01	T03	D80		
U209	250*	P	S01	T03	D80		
U210	250*	P	S01	T03	D80		
U211	250*	P	S01	T03	D80		
U212	250*	P	S01	T03	D80		
U213	250*	P	S01	T03	T04	D80	
U214	250*	P	S01	T03	D80		
U215	250*	P	S01	D80			
U216	250*	P	S01		D80		
U217	250*	P	S01	T04	D80		
U218	250*	P	S01	T03	D80		

Continued from the front.

IV. DESCRIPTION OF HAZARDOUS WASTES *(continued)*

E. USE THIS SPACE TO LIST ADDITIONAL PROCESS CODES FROM ITEM D(1) ON PAGE 3.

All entries with an asterick in column IVB on page 3A are generated in labpack quantities only. If a new process/experiment will generate more than the stated quality, a revised Part A will be submitted.

EPA I.D. NO. *(enter from page 1)*

F N M 0 8 9 0 0 1 0 5 1 5 T/A 6

V. FACILITY DRAWING

All existing facilities must include in the space provided on page 5 a scale drawing of the facility *(see instructions for more detail).*

VI. PHOTOGRAPHS

All existing facilities must include photographs *(aerial or ground—level)* that clearly delineate all existing structures; existing storage, treatment and disposal areas; and sites of future storage, treatment or disposal areas *(see instructions for more detail).*

VII. FACILITY GEOGRAPHIC LOCATION

LATITUDE *(degrees, minutes, & seconds)*	LONGITUDE *(degrees, minutes, & seconds)*
3 5 / 4 9 / 0 5 1	1 0 6 / 1 4 / 0 1 5

VIII. FACILITY OWNER

☐ A. If the facility owner is also the facility operator as listed in Section VIII on Form 1, "General Information", place an "X" in the box to the left and skip to Section IX below.

B. If the facility owner is not the facility operator as listed in Section VIII on Form 1, complete the following items:

1. NAME OF FACILITY'S LEGAL OWNER	2. PHONE NO. *(area code & no.)*
E United States Department of Energy	5 0 5 - 6 6 7 - 5 2 8 8

3. STREET OR P.O. BOX	4. CITY OR TOWN	5. ST.	6. ZIP CODE
F Los Alamos Area Office	G Los Alamos	N M	8 7 5 4 5

IX. OWNER CERTIFICATION

I certify under penalty of law that I have personally examined and am familiar with the information submitted in this and all attached documents, and that based on my inquiry of those individuals immediately responsible for obtaining the information, I believe that the submitted information is true, accurate, and complete. I am aware that there are significant penalties for submitting false information, including the possibility of fine and imprisonment.

A. NAME *(print or type)*	B. SIGNATURE	C. DATE SIGNED
Harold Valencia Los Alamos Area Office	Don Duncan	10-10-85

X. OPERATOR CERTIFICATION

I certify under penalty of law that I have personally examined and am familiar with the information submitted in this and all attached documents, and that based on my inquiry of those individuals immediately responsible for obtaining the information, I believe that the submitted information is true, accurate, and complete. I am aware that there are significant penalties for submitting false information, including the possibility of fine and imprisonment.

A. NAME *(print or type)*	B. SIGNATURE	C. DATE SIGNED
Robert N. Thorn Acting Director	Robert N Thorn	10.7.85

CONTINUE ON PAGE 5

inued from page 2.
E: Photocopy this page before completing if you h[illegible]ore than 26 wastes to list.

Form Approved OMB No. 158-S80004

EPA I.D. NUMBER (enter from page 1): N M 0 8 9 0 0 1 0 5 1 5 — T/A: [illegible] C: 1

FOR OFFICIAL USE ONLY: W — DUP — T/A: [illegible] C: 2 — DUP

DESCRIPTION OF HAZARDOUS WASTES (continued)

	A. EPA HAZARD. WASTE NO. (enter code)	B. ESTIMATED ANNUAL QUANTITY OF WASTE	C. UNIT OF MEASURE (enter code)	D. PROCESSES 1. PROCESS CODES (enter)				2. PROCESS DESCRIPTION (if a code is not entered in D(1))
	U219	250*	P	S01	D80			
	U220	1000	P	S01	T03	D80		
	U221	250*	P	S01	T03	D80		
	U222	250*	P	S01	T03	D80		
	U223	1000	P	S01	T03	D80		
5	U225	250*	P	S01	T03	D80		
7	U226	1500	P	S01	T03	D80		
3	U227	250*	P	S01	T03	D80		
9	U228	2000	P	S01	T03	D80		
0	U230	250*	P	S01	T03	D80		
1	U231	250*	P	S01	T03	D80		
-	U232	250*	P	S01	T03	D80		
3	U233	250*	P	S01	T03	D80		
4	U234	250*	P	S01	T04	D80		
5	U235	250*	P	S01	T03	D80		
6	U236	250*	P	S01	T03	D80		
7	U237	250*	P	S01	T03	D80		
8	U238	250*	P	S01	T03	D80		
9	U239	1000	P	S01	T03	D80		
0	U240	250*	P	S01	T03	D80		
1	U242	250*	P	S01	T03	D80		
2	U243	250*	P	S01	T03	D80		
3	U244	250*	P	S01	T03	D80		
	U246	250*	P	S01	D80			
5	U247	250*	P	S01	T03	D80		
6		END OF U DESIGNATOR						

CONTINUE ON REVERSE

The following drawings are attached to the revised Part A dated 10/31/84.

ENG-R 5277 Sheets 2 & 5 - "S" Site showing location of burn pits area - also relationship of "S" Site to rest of Lab. TA-40 & TA-14 locations where HE waste may be destroyed.

TA-16 - Structure Location Plan - Structural designation of pressure vessels (401, 406) and burn pads (387, 388, 399).

ENG-C-27630 - Pressure Vessel (406)

ENG-C-25937 - Pressure Vessel (401)

ENG-C-5849 - Burn Pads (387, 388, 399).

LA-RV-1-13.1 and LA-RV-P-9 - Batch Waste Treatment System at TA-50-1.

Area L Chemical Storage Facility, TA-54.

Area L Chemical Storage Facility, shed.

ENG-R-5277 Shed 10 - TA-15 and TA-36 - firing points where HE waste may be destroyed.

ENG-R-5277 Sheet 11 - TA-39 firing points where HE waste may be destroyed.

ENG-R-5277 Sheet 5 - TA-14 and TA-40 firing points where HE waste may be destroyed.

I. The following drawings are attached to the revised Part A dated 7/26/84:

Figure 1 - Technical Area Location Plan

Figure 4 - TA-50 Structure Location Plan showing location of the Batch Waste Treatment Facility in Building 1 and the controlled air incinerator in Building 37.

Figure 5 - TA-54 Structure Location Plan showing Area L.

II. The following drawings are new submittals:

TDF	(Fig. 4-3 of Part B)
TDF	(Fig. 4-4 of Part B)
TA-54	Area L Storage area

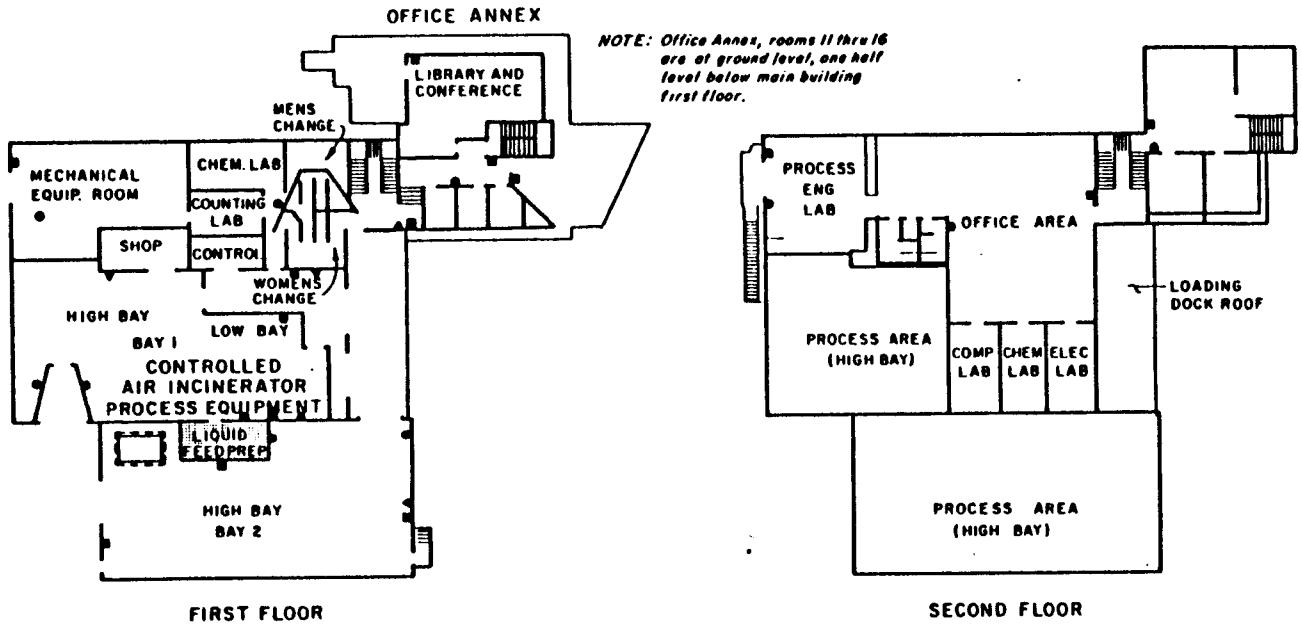

NOTE: Office Annex, rooms 11 thru 16 are at ground level, one half level below main building first floor.

TREATMENT DEVELOPMENT FACILITY
TA-50, BUILDING 37

NOTE: All rooms are covered by automatic sprinkler heads. Fire water flow activates automatic alarm pull.

▲ EVACUATION ALARM
■ ALARM PULL (FIRE)
● FIRE EXTINGUISHER
HALON SYSTEM

FIGURE 4-3

TREATMENT DEVELOPMENT FACILITY SHOWING LOCATIONS OF CHEMICAL WASTE INCINERATOR AND SUPPORT FACILITIES

PREPARED FOR

LOS ALAMOS NATIONAL LABORATORY
LOS ALAMOS, NEW MEXICO

IT CORPORATION

DRAWN BY M.J.G. 11/20/84 | CHECKED BY | APPROVED BY | DRAWING NUMBER

20 1295 HERCULENE ADD SMITH CO., PGH., PA

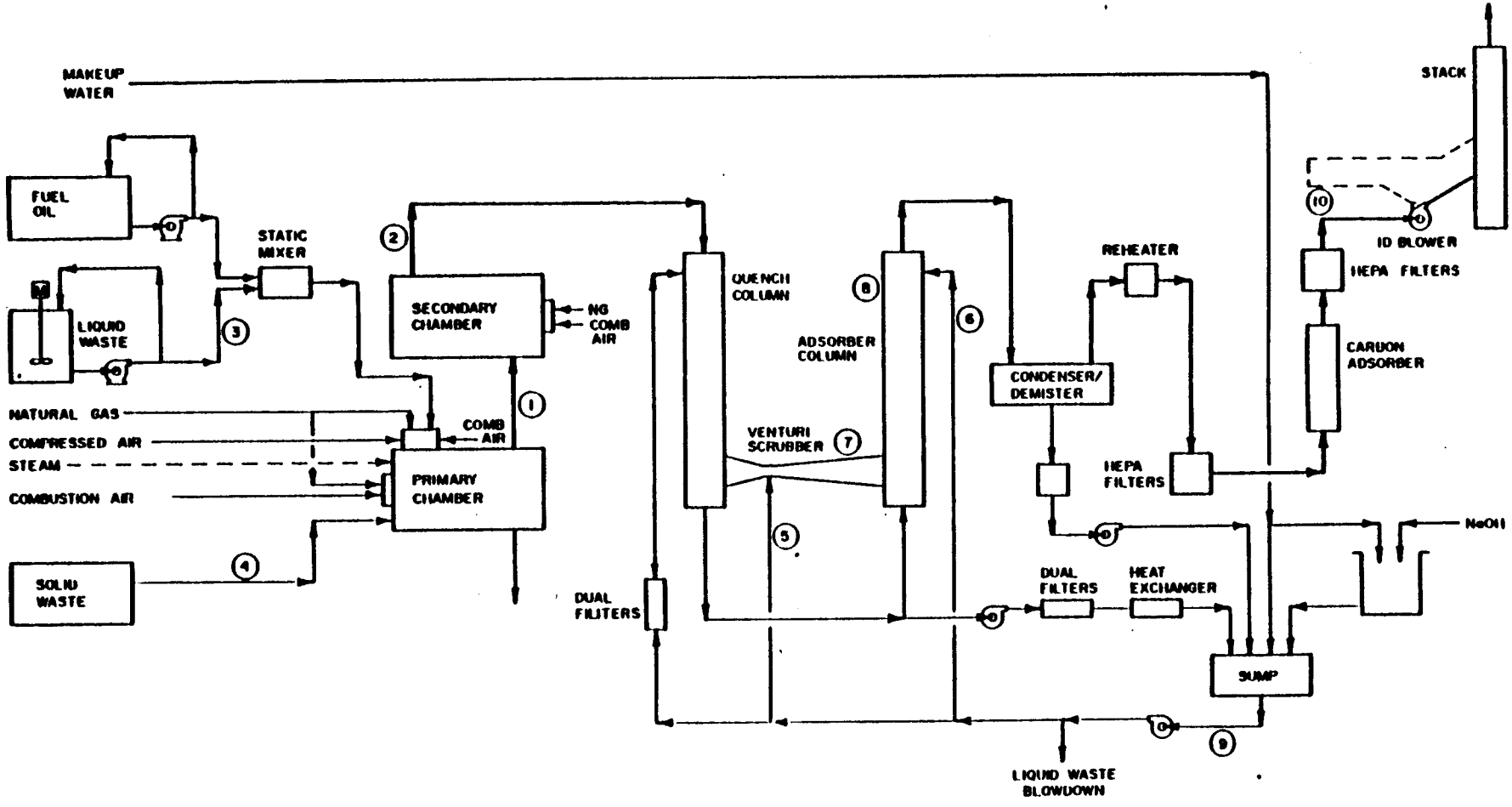

FIGURE 4-4

INCINERATOR
PROCESS DIAGRAM

PREPARED FOR

LOS ALAMOS NATIONAL LABORATORY

LOS ALAMOS, NEW MEXICO

IT CORPORATION

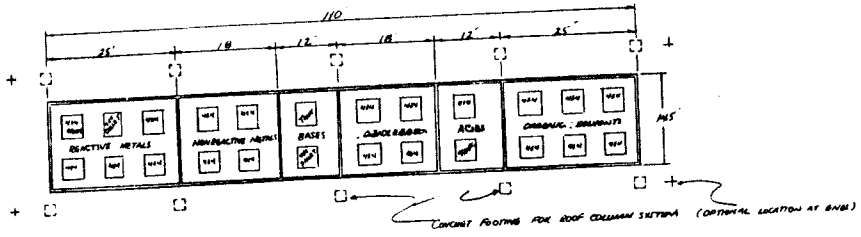

No Scale
FLOOR PLAN OF CHEMICAL STORAGE AREA

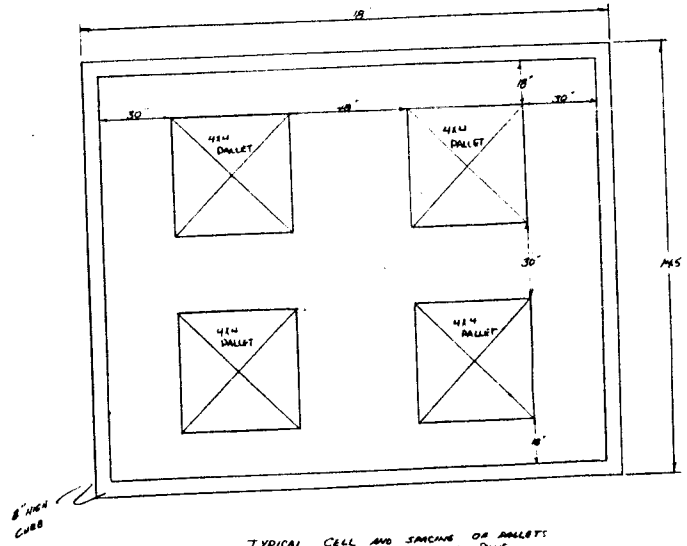

TYPICAL CELL AND SPACING OF PALLETS WITH 55-GALLON DRUMS NO SCALE

GENERAL NOTES

1. METAL ROOF SYSTEM ONLY WILL HAVE A 2:12 PITCH
2. SYSTEM IS 35' WIDE, 110' (150' OPTIONAL) LONG, 16' MINIMUM EAVE HEIGHT
3. 30 POUND ROOF LOAD
4. PURCHASE REQUEST TO PURCHASE & ERECT ROOF SYSTEM
5. FOOTING TO BE CONSTRUCTED BY THE LABORATORY/EMA
6. CONCRETE PAD TO BE CONSTRUCTED BY THE LABORATORY/EMA
7. LAY ASPHALTIC CONCRETE AROUND THE CONCRETE PAD AS REQUIRED - (2" THICKNESS)

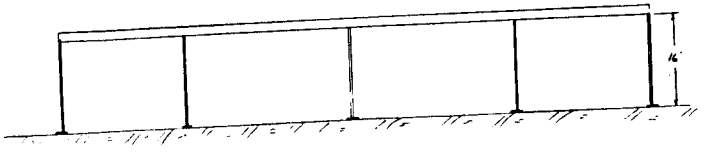

ROOF SYSTEM OVER CHEMICAL STORAGE PAD
NO SCALE

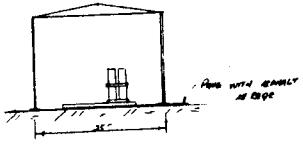

ROOF SYSTEM
END VIEW
NO SCALE

ENGINEERS WORK PRINT
MISSILE RANGE
AREA L, T-5-9
HAZARDOUS CHEMICAL
STORAGE ROOF SYSTEM
FLOOR LAYOUT