WASTEWATER STREAM CHARACTERIZATION FOR TA-15

at
Los Alamos National Laboratory

ENVIRONMENTAL STUDY

CHARACTERIZATION REPORT # 24

15218

ENVIRONMENTAL MANAGEMENT DIVISION
Los Alamos National Laboratory
Los Alamos, New Mexico 87545

Los Alamos

Los Alamos National Laboratory is operated by the University of California for the United States Department of Energy

WASTEWATER STREAM CHARACTERIZATION FOR TA-15

ENVIRONMENTAL STUDY

prepared for:
THE LOS ALAMOS NATIONAL LABORATORY
Los Alamos, New Mexico

under subcontract 9-XG8-2874P-1

by:
Santa Fe Engineering, Ltd.
1429 Second Street
Santa Fe, New Mexico 87504
(505) 988-7438
and
Engineering and Infromation Resources (WX-12)
Los Alamos National Laboratory
Los Alamos, New Mexico 87545
(505) 665-2510

June, 1992

EXECUTIVE SUMMARY

All buildings in TA-15 were visited to document all drain piping and to make permitting recommendations. The pipes exiting the building are as follows:

1) from 15-8, 22, 23, 30, 41, 42, 43, 47, 92, 140, 141, 182, 187, 188, 189, 204, 213, 231, 232, 239, 241, 243, 245, 261, 276, 289, 290, 297, 307, 314, 319, 320, 321, 322, 323, 324, 325, 326, 327, 328, 329, 330, 331, 332, 333, 334, 335, 336, 337, 338, 339, 340, 341, 342, 343, 344, 345, 346, 347, 348, 349, 350, 351, 352, 353, 354, 355, 356, 357, 358, 359, 360, 361, 362, 363, 364, 365, 366, 367, 368, 369, 370, 371, 372, 373, 374, 375, 376, 377, 381, 382, 383 and 424: no drains,

2) from 15-9, 27, 46 and 138: no water to the drains,

3) from 15-20: one discharge to a septic tank, two disconnected pipes, one discharge to the canyon, one discharge from a hot water heater and one discharge from an air conditioner,

4) from 15-40: two previously permitted outfalls in 04A category, one discharge to a septic tank and two discharges from air conditioners,

5) from 15-44: one discharge to a septic tank and one discharge from a French drain system,

6) from 15-45: one discharge to a septic tank and one discharge from a French drain system,

7) from 15-50: one discharge from an equipment room, one discharge from a building drain trough, one discharge from a hot water heater, one discharge from a back flow preventer, one discharge to a septic tank, one storm water discharge, two discharges from the fire water system and one discharge of deionized water,

8) from 15-183: one unpermitted discharge, one storm water discharge, one permitted 06A discharge and one discharge to a septic tank,

9) from 15-184: one permitted 04A discharge, one foundation drain, one gas vent and one discharge from a chiller,

10) from 15-185 and 202: two discharges from foundation drains, one discharge to a septic tank, one permitted 03A discharge, one gas vent, one discharge from the fire water system and one storm water discharge,

11) from 15-186, 199, 200 and 201: one discharge to a septic tank and two fire water discharges,

12) from 15-194: one discharge to a septic tank, one discharge from a back flow preventer and one discharge from a hot water heater,

13) from 15-203: one permitted 04A discharge, one discharge from an air compressor and one discharge from a back flow preventer

14) from 15-233: one discharge to a septic tank,

15) from 15-242: one discharge from a sink and one discharge from a hot water heater,

16) from 15-263: one discharge from a back flow preventer and one discharge from a chiller,

17) from 15-280: one discharge to a septic tank and one fire water discharge,

18) from 15-285: one discharge to a septic tank, two storm water discharges and three fire water discharges,

19) from 15-305: one discharge to a septic tank,

20) from 15-306: one unpermitted discharge, six discharges from chillers, one discharge from an air compressor and one permitted 04A discharge,

21) from 15-310: one discharge to a septic tank,

22) from 15-313: one discharge to a holding tank, eleven storm water discharges. one discharge to a septic tank and one discharge from a chiller.

Revised EPA Forms 2C are included for the appropriate outfalls. Flows shown on the forms are estimated from site observations and discussions with users, and analytical data are defined from information obtained from previously sampled outfalls.

Recommendation for repiping are provided to permit outfall consolidation to minimize permit maintenance requirements.

A waste stream database has been prepared listing wastewater type and flow rate for each outfall.

TABLE OF CONTENTS

1.0 INTRODUCTION 1

2.0 FIELD INVESTIGATION 3

3.0 RECOMMENDATIONS FOR BUILDINGS WITH NO DRAINS 4

4.0 RECOMMENDATIONS FOR BUILDINGS 15-9, 27, 46 AND 138 4

5.0 RECOMMENDATIONS FOR BUILDING 15-20 4

5.1 Outfall 15-20-OPN-1 4
5.2 Outfall 15-20-OPN-2 5
5.3 Outfall 15-20-OPN-3 5
5.4 Outfall 15-20-OPN-4 5
5.5 Outfalls 15-20-OPN-5 and 15-20-OPN-6 5

6.0 RECOMMENDATIONS FOR BUILDING 15-40 5

6.1 Outfall 15-40-OPN-1 6
6.2 Outfall 15-40-OPN-2 6
6.3 Outfall 15-40-OPN-3 6
6.4 Outfalls 15-40-OPN-4 and 15-20-OPN-5 6

7.0 RECOMMENDATIONS FOR BUILDING 15-44 7

7.1 Outfall 15-44-OPN-1 7
7.2 Outfall 15-44-OPN-2 7

8.0 RECOMMENDATIONS FOR BUILDING 15-45 7

8.1 Outfall 15-45-OPN-1 7
8.2 Outfall 15-45-OPN-2 8

9.0 RECOMMENDATIONS FOR BUILDING 15-50 8

9.1 Outfall 15-50-OPN-1 8
9.2 Outfall 15-50-OPN-2 8
9.3 Outfall 15-50-OPN-3 9
9.4 Outfall 15-50-OPN-4 9
9.5 Outfall 15-50-OPN-5 9
9.6 Outfall 15-50-OPN-6 9
9.7 Outfalls 15-50-OPN-7 and 15-50-OPN-8 9
9.8 Outfall 15-50-OPN-9 9

10.0 RECOMMENDATIONS FOR BUILDING 15-183 10

10.1 Outfall 15-183-OPN-1 10
10.2 Outfall 15-183-OPN-2 10
10.3 Outfall 15-183-OPN-3 10
10.4 Outfall 15-183-OPN-4 11

11.0 RECOMMENDATIONS FOR BUILDING 15-184 11

11.1 Outfall 15-184-OPN-1 11
11.2 Outfall 15-184-OPN-2 11
11.3 Outfall 15-184-OPN-3 11
11.4 Outfall 15-184-OPN-4 12

12.0 RECOMMENDATIONS FOR BUILDINGS 15-185 AND 202 12

12.1 Outfalls 15-185-OPN-1 and 15-185-OPN-2 12
12.2 Outfall 15-185-OPN-3 12
12.3 Outfall 15-185-OPN-4 12
12.4 Outfall 15-185-OPN-5 13
12.5 Outfall 15-185-OPN-6 13
12.6 Outfall 15-185-OPN-7 13

13.0 RECOMMENDATIONS FOR BUILDINGS 15-186, 199, 200 AND 201 13

13.1 Outfall 15-186-OPN-1 13
13.2 Outfalls 15-186-OPN-2 and 15-186-OPN-3 14

14.0 RECOMMENDATIONS FOR BUILDING 15-194 14

14.1 Outfall 15-194-OPN-1 14
14.2 Outfall 15-194-OPN-2 14
14.3 Outfall 15-194-OPN-3 14

15.0 RECOMMENDATIONS FOR BUILDING 15-203 14

15.1 Outfall 15-203-OPN-1 15
15.2 Outfall 15-203-OPN-2 15
15.3 Outfall 15-203-OPN-3 15

16.0 RECOMMENDATIONS FOR BUILDING 15-233 15

17.0 RECOMMENDATIONS FOR BUILDING 15-242 15

17.1 Outfall 15-242-OPN-1 15
17.2 Outfall 15-242-OPN-2 16

18.0 RECOMMENDATIONS FOR BUILDING 15-263 16

18.1 Outfall 15-263-OPN-1 16
18.2 Outfall 15-263-OPN-2 16

19.0 RECOMMENDATIONS FOR BUILDING 15-280 17

19.1 Outfall 15-280-OPN-1 17
19.2 Outfall 15-280-OPN-2 17

20.0 RECOMMENDATIONS FOR BUILDING 15-285 17

20.1 Outfall 15-285-OPN-1 17
20.2 Outfalls 15-285-OPN-2 and 15-285-OPN-6 18
20.3 Outfalls 15-285-OPN-3, 15-285-OPN-4 and 15-285-OPN-5 18

21.0 RECOMMENDATIONS FOR BUILDING 15-305 18

22.0 RECOMMENDATIONS FOR BUILDING 15-306 18

22.1 Outfall 15-306-OPN-1 18
22.2 Outfalls 15-306-OPN-2, 15-306-OPN-3, 15-306-OPN-4, 15-306-OPN-5, 15-306-OPN-6 and 15-306-OPN-7 19
22.3 Outfall 15-306-OPN-8 19
22.4 Outfall 15-306-OPN-9 19

23.0 RECOMMENDATIONS FOR BUILDING 15-310 19

24.0 RECOMMENDATIONS FOR BUILDING 15-313 19

24.1 Outfall 15-313-OPN-1 20
24.2 Outfalls 15-313-OPN-2, 15-313-OPN-3, 15-313-OPN-4, 15-313-OPN-5, 15-313-OPN-7, 15-313-OPN-8, 15-313-OPN-9, 15-313-OPN-10, 15-313-OPN-11, 15-313-OPN-13 and 15-131-OPN-14 20
24.3 Outfall 15-313-OPN-6 20
24.4 Outfall 15-313-OPN-12 20

25.0 CONCLUSION 21

APPENDICES

Appendix 1 - DRAIN SUMMARY TABLES
Appendix 2 - WASTE STREAM CHARACTERIZATION DATABASE
Appendix 3 - EPA FORMS
Appendix 4 - WX-12 DRAWINGS AND DYE STUDY INFORMATION
Appendix 5 - DRAIN SCHEMATICS

LIST OF TABLES

1. TA 15-20 DRAIN SUMMARY
2. TA 15-40 DRAIN SUMMARY
3. TA 15-44 DRAIN SUMMARY
4. TA 15-45 DRAIN SUMMARY
5. TA 15-50 DRAIN SUMMARY
6. TA 15-183 DRAIN SUMMARY
7. TA 15-184 DRAIN SUMMARY
8. TA 15-185 DRAIN SUMMARY
9. TA 15-186 DRAIN SUMMARY
10. TA 15-194 DRAIN SUMMARY
11. TA 15-203 DRAIN SUMMARY
12. TA 15-233 DRAIN SUMMARY
13. TA 15-242 DRAIN SUMMARY
14. TA 15-263 DRAIN SUMMARY
15. TA 15-280 DRAIN SUMMARY
16. TA 15-285 DRAIN SUMMARY
17. TA 15-305 DRAIN SUMMARY
18. TA 15-306 DRAIN SUMMARY
19. TA 15-310 DRAIN SUMMARY
20. TA 15-313 DRAIN SUMMARY
21. ABBREVIATIONS

LIST OF FIGURES

1. TA 15-20 BUILDING DRAIN SCHEMATIC
2. TA 15-40 BUILDING DRAIN SCHEMATIC
3. TA 15-44 BUILDING DRAIN SCHEMATIC
4. TA 15-45 BUILDING DRAIN SCHEMATIC
5. TA 15-50 BUILDING DRAIN SCHEMATIC
6. TA 15-183 BUILDING DRAIN SCHEMATIC
7. TA 15-184 BUILDING DRAIN SCHEMATIC
8. TA 15-185 BUILDING DRAIN SCHEMATIC
9. TA 15-186 BUILDING DRAIN SCHEMATIC
10. TA 15-194 BUILDING DRAIN SCHEMATIC
11. TA 15-203 BUILDING DRAIN SCHEMATIC
12. TA 15-233 BUILDING DRAIN SCHEMATIC
13. TA 15-244 BUILDING DRAIN SCHEMATIC
14. TA 15-263 BUILDING DRAIN SCHEMATIC
15. TA 15-280 BUILDING DRAIN SCHEMATIC
16. TA 15-285 BUILDING DRAIN SCHEMATIC
17. TA 15-305 BUILDING DRAIN SCHEMATIC
18. TA 15-306 BUILDING DRAIN SCHEMATIC
19. TA 15-310 BUILDING DRAIN SCHEMATIC
20. TA 15-313 BUILDING DRAIN SCHEMATIC

1.0 INTRODUCTION

In August and September, 1991, Patrick E. Binkley of Santa Fe Engineering (SFE) toured the all buildings in TA-15 with Loren Abercrombie of Engineering and Information Resources (WX-12). The purpose of this study is to identify building drain piping and to characterize the wastewater flows and sources at the time of the visit. This report will not reflect any subsequent changes in piping or operation. The Wastewater Stream Characterization Policy of April 14, 1992 was followed for this study. The following tasks were performed for this purpose:

1. Building drains and all piping exiting the building were identified and laid out in schematic form;

2. Wastewater sources were identified at each drain and the wastewater was characterized according to flow rate and quality. The location of outfalls and their potential sources of discharge were determined. Potential pollutants were also noted;

3. Permit applications for discharges of clean water discharges were not prepared since these discharges do not require permitting at this time and

4. Potential problems were identified and recommendations were made for repiping, floor drain plugging and spill containment where deemed appropriate.

The field investigation proceeded by verifying drain schematic drawings prepared by SFE from drawings provided by Los Alamos National Laboratory (LANL) Facilities Engineering Division. Buildings for which a schematic was not prepared were visited to insure that no drains exist or that no water supply was available for the abandoned buildings. The following information was used to define drain piping and characterize the wastewater streams:

1. Laboratory engineering drawings were used to prepare both WX-12 drawings and the SFE drain piping schematics. The Solid Waste Stream Characterization conducted by IT Corporation was also reviewed. The National Pollutant Discharge Elimination System (NPDES) Permit, the 1990 NPDES Permit Application submitted by Los Alamos National Laboratory (LANL) in September, 1990, the latest Federal Facilities Compliance Agreement (FFCA) between the Department of Energy (DOE) and the Environmental Protection Agency (EPA) and the Administrative Order (AO) Docket Number VI-91-1329 issued by EPA to the University of California were used for reference;

2. SFE personnel John Sisneros and Steve Diamond verified drain piping by dye checking during October and November, 1991 and

3. A site visit was performed to verify the SFE drain schematic and to identify potential outfall pipes exiting the building. The visit entailed a room by room inspection of wastewater sources and drains. Interviews with site personnel were conducted to assist in wastestream characterization.

2.0 FIELD INVESTIGATION

The pipes exiting the building have been assigned an Outlet Piping Number. The four part number, sequentially, identifies the Technical Area where the pipe is located, the building from which the pipe discharges, the letters OPN to indicate that it is an outlet piping number and the unique number for the pipe. The piping exiting the building will be labeled for easy identification in the future.

Each drain has a unique identification number. Each number consists of three parts. The first part is the floor the drain is on. The second part has letters that indicate the drain type (abbreviations used are summarized in Table 21). The final part is a unique number for each drain. For example, the floor drain numbering on the first floor would start with 1FD1. The roof drains do not have the number identifying the floor such as RD1 for Roof Drain 1.

The function of each pipe exiting from the buildings are listed Appendix 1 in Tables 1 through 20, with an abbreviations list in Table 21. Appendix 2 contains the waste stream characterization database output, listing wastewater source, flow rates and periodicity information for each outfall drain. Completed EPA forms are in Appendix 3 for the appropriate outfalls. Appendix 4 provides a copy of the WX-12 drawings and dye study information. Flow schematics of the drains from each building are attached in Appendix 5 as Figures 1 through 20.

3.0 RECOMMENDATIONS FOR BUILDINGS WITH NO DRAINS

Buildings 15-8, 22, 23, 30, 41, 42, 43, 47, 92, 140, 141, 182, 187, 188, 189, 204, 213, 231, 232, 239, 241, 243, 245, 261, 276, 289, 290, 297, 307, 314, 319, 320, 321, 322, 323, 324, 325, 326, 327, 328, 329, 330, 331, 332, 333, 334, 335, 336, 337, 338, 339, 340, 341, 342, 343, 344, 345, 346, 347, 348, 349, 350, 351, 352, 353, 354, 355, 356, 357, 358, 359, 360, 361, 362, 363, 364, 365, 366, 367, 368, 369, 370, 371, 372, 373, 374, 375, 376, 377, 381, 382, 383 and 424 do not have any drains. No permitting or changes are recommended. No EPA forms were completed.

4.0 RECOMMENDATIONS FOR BUILDINGS 15-9, 27, 46 AND 138

These buildings have drains but no supply of water. Pluging the drains that are not used is recommended. No permitting is recommended. No EPA forms were completed.

5.0 RECOMMENDATIONS FOR BUILDING 15-20

Table 1 is a list of the drains to the building outfalls and Figure 1 is a schematic of the piping. The table lists the drains that connect to the outfall pipes and includes recommendations for changes to the drain piping. The discussion below gives the reasoning for the recommendations.

5.1 Outfall 15-20-OPN-1

This outfall consists of a building drain trough, a sink and a water fountain and discharges to the canyon. The sink and water fountain should be removed. The drain trough should be plugged. No permitting is recommended and no EPA forms were prepared.

5.2 Outfall 15-20-OPN-2

This outfall to daylight is from the relief valve on a hot water heater. This outfall should be included in a Notice of Intent to Discharge (NOI). No piping changes are recommended. No EPA forms were prepared.

5.3 Outfall 15-20-OPN-3

This outfall is from the building rest room and flows to a septic tank. All sources are appropriate for a septic tank. No piping changes or permitting are recommended. No EPA forms were prepared.

5.4 Outfall 15-20-OPN-4

This outfall to daylight consists of condensed water from an air conditioner. This outfall should be included in an NOI. No piping changes are recommended. No EPA forms were prepared.

5.5 Outfalls 15-20-OPN-5 and 15-20-OPN-6

These two outfalls are disconnected pipes. The equipment that they were attached to has been removed. These pipes should be removed. No permitting is recommended. No EPA forms were prepared.

6.0 RECOMMENDATIONS FOR BUILDING 15-40

Table 2 is a list of the drains to the building outfalls and Figure 2 is a schematic of the piping. The table lists the drains that connect to the outfall pipes and includes recommendations for changes to the drain piping. The discussion below gives the reasoning for the recommendations.

6.1 Outfall 15-40-OPN-1

This outfall to daylight was previously permitted as 04A102. The sources to the outfall are from four floor drains in a pipe alley under the building and two roof drains. The floor drains can receive flow from drain valves in the potable water piping in the pipe alley. No evidence of flow from the drains was noticed. The roof drains should be piped as a new outfall. The floor drains outfall should be valved and sealed closed. No EPA forms were prepared.

6.2 Outfall 15-40-OPN-2

This outfall to daylight was previously permitted as 04A103. The sources to the outfall are from seven floor drains in a pipe alley under the building and two roof drains. The floor drains can receive flow from drain valves in the potable water piping in the pipe alley. No evidence of flow from the drains was noticed. The roof drains should be piped as a new outfall. The floor drains outfall should be valved and sealed closed. No EPA forms were prepared.

6.3 Outfall 15-40-OPN-3

This outfall receives flow from sanitary facilities and flows to a septic tank. No piping changes or permitting are recommended. No EPA forms were prepared.

6.4 Outfalls 15-40-OPN-4 and 15-40-OPN-5

These two outfalls to daylight consist of condensed water from air conditioners. These outfalls should be included in an NOI. No piping changes are recommended. No EPA forms were prepared.

7.0 RECOMMENDATIONS FOR BUILDING 15-44

Table 3 is a list of the drains to the building outfalls and Figure 3 is a schematic of the piping. The table lists the drains that connect to the outfall pipes and includes recommendations for changes to the drain piping. The discussion below gives the reasoning for the recommendations.

7.1 Outfall 15-44-OPN-1

This outfall is from a lavatory and flows to a septic tank. No changes or permitting are recommended. No EPA forms were prepared.

7.2 Outfall 15-44-OPN-2

This outfall to daylight is from French drain system under the building. Any flow would be of rain water that might flow under the building. No piping changes or permitting are recommended. No EPA forms were prepared.

8.0 RECOMMENDATIONS FOR BUILDING 15-45

Table 4 is a list of the drains to the building outfalls and Figure 4 is a schematic of the piping. The table lists the drains that connect to the outfall pipes and includes recommendations for changes to the drain piping. The discussion below gives the reasoning for the recommendations.

8.1 Outfall 15-45-OPN-1

This outfall is from a lavatory and a toilet and flows to a septic tank. No changes or permitting are recommended. No EPA forms were prepared.

8.2 Outfall 15-45-OPN-2

This outfall to daylight is from French drain system under the building. Any flow would be of rain water that might flow under the building. No piping changes or permitting are recommended. No EPA forms were prepared.

9.0 RECOMMENDATIONS FOR BUILDING 15-50

Table 5 is a list of the drains to the building outfalls and Figure 5 is a schematic of the piping. The table lists the drains that connect to the outfall pipes and includes recommendations for changes to the drain piping. The discussion below gives the reasoning for the recommendations.

9.1 Outfall 15-50-OPN-1

This outfall flows to the drainage ditch outside the building. The only source of flow to the outfall is from a shower. The shower should not be used and should be removed. Placement in an adjacent building and piping to a septic tank would be possible. The equipment drain should be plugged. No permitting is recommended and no EPA forms were completed.

9.2 Outfall 15-50-OPN-2

This outfall is from a building drain trough and discharges to the canyon. No chemicals, oils or other materials are used in this building that could flow into the drain trough. The only flow would be water that might be used to wash down the floor. The drain trough should be plugged temporarily. The drain would be used only in an emergency. No permitting is recommended and no EPA forms were prepared.

9.3 Outfall 15-50-OPN-3

This outfall to daylight is from the relief valve on a hot water heater. This outfall should be included in an NOI. No piping changes are recommended. No EPA forms were prepared.

9.4 Outfall 15-50-OPN-4

This outfall to daylight is from a drain on a potable water back flow preventer. This outfall should be included in an NOI. No piping changes are recommended. No EPA forms were prepared.

9.5 Outfall 15-50-OPN-5

This outfall receives flow from a sink and a water fountain and flows to a septic tank. No piping changes or permitting are recommended. No EPA forms were prepared.

9.6 Outfall 15-50-OPN-6

This outfall is from a trough that is outside of the building. The flow is to the canyon. The outfall receives rain water that falls between buildings 15-50 and 15-203. No piping changes or permitting are recommended. No EPA forms were prepared.

9.7 Outfalls 15-50-OPN-7 and 15-50-OPN-8

These outfalls to daylight are drains on the fire water system These outfall should be included in an NOI. No piping changes are recommended. No EPA forms were prepared.

9.8 Outfall 15-50-OPN-9

This outfall to daylight is a drain from a tank of deionized water. This outfall should be included in an NOI. No piping changes are recommended. No EPA forms were prepared.

10.0 RECOMMENDATIONS FOR BUILDING 15-183

Table 6 is a list of the drains to the building outfalls and Figure 6 is a schematic of the piping. The table lists the drains that connect to the outfall pipes and includes recommendations for changes to the drain piping. The discussion below gives the reasoning for the recommendations.

10.1 Outfall 15-183-OPN-1

The drains to this outfall are from thirteen floor drains, five sinks and one water fountain. The outfall is broken under ground and does not daylight into the canyon as it once did. Repiping all of the drains except BFD13 to the sanitary sewer is recommended. The destination of BFD13 should be located or the drain repiped to daylight. This drain is need to drain rain from the basement stair well. No permitting is recommended. No EPA forms were prepared.

10.2 Outfall 15-183-OPN-2

This outfall to daylight receives flow from five roof drains. No piping changes or permitting are recommended. No EPA forms were prepared.

10.3 Outfall 15-183-OPN-3

This outfall to daylight is permitted as 06A123 and receives flow from a floor drain, an eye wash, three sinks in a photo lab, two hand washing sinks and a water fountain. All the sources are appropriate for the photo outfall except the two hand washing sinks and the water fountain. Repiping of the water fountain to the sanitary sewer is recommended. Removing sinks 1S7 and 1S8 is also recommended. An EPA Form 2C is attached for this outfall.

10.4 Outfall 15-183-OPN-4

This outfall receives flow from the sanitary facilities in the building and flows to a septic tank. No changes or permitting are recommended. No EPA forms were attached.

11.0 RECOMMENDATIONS FOR BUILDING 15-184

Table 7 is a list of the drains to the building outfalls and Figure 7 is a schematic of the piping. The table lists the drains that connect to the outfall pipes and includes recommendations for changes to the drain piping. The discussion below gives the reasoning for the recommendations.

11.1 Outfall 15-184-OPN-1

This outfall to daylight is permitted as 04A139. Flow is from eleven floor drains in the Phermex chamber. Floor drain 1FD4 receives once through cooling water. Plugging the floor drains except 1FD4 is recommended. 2FD4 should be modified to exclude floor washings. An EPA Form 2C is attached for this outfall.

11.2 Outfall 15-184-OPN-2

This outfall to daylight receives rain water from a drainage system around the foundation of the building. No piping changes or permitting are recommended. No EPA forms were prepared.

11.3 Outfall 15-184-OPN-3

This outfall is a gas vent to atmosphere. No piping changes or permitting are recommended. No EPA forms were prepared.

11.4 Outfall 15-184-OPN-4

This outfall to daylight is condensate from a chiller. This outfall should be included in an NOI. No piping changes are recommended. No EPA forms were prepared.

12.0 RECOMMENDATIONS FOR BUILDINGS 15-185 AND 15-202

Table 8 is a list of the drains to the building outfalls and Figure 8 is a schematic of the piping. The table lists the drains that connect to the outfall pipes and includes recommendations for changes to the drain piping. The discussion below gives the reasoning for the recommendations. Structure 15-202 is a cooling tower that blows down in building 15-185.

12.1 Outfalls 15-185-OPN-1 and 15-185-OPN-2

These outfalls to daylight receive rain water from a drainage system around the foundation of the building. No piping changes or permitting are recommended. No EPA forms were prepared.

12.2 Outfall 15-185-OPN-3

This outfall receives flow from sanitary facilities and flows to a septic tank. No changes or permitting are recommended. No EPA forms were prepared.

12.3 Outfall 15-185-OPN-4

This outfall to daylight is permitted as 03A028. The cooling tower 15-202 is blown down into a basement floor drain (BFD17). The hand washing sink (BS1) in the basement should removed and all floor drains except BFD17 should be plugged. BFD17 should be modified to exclude floor washings. An EPA Form 2C is attached for this outfall.

12.4 Outfall 15-185-OPN-5

This outfall is a gas vent to atmosphere. No piping changes or permitting are recommended. No EPA forms were prepared.

12.5 Outfall 15-185-OPN-6

This outfall to daylight is a drain from the fire water system This outfall should be included in an NOI. No piping changes are recommended. No EPA forms were prepared.

12.6 Outfall 15-185-OPN-7

This outfall to daylight receives flow from five roof drains. No piping changes or permitting are recommended. No EPA forms were prepared.

13.0 RECOMMENDATIONS FOR BUILDINGS 15-186, 15-199, 15-200 AND 15-201

Table 9 is a list of the drains to the building outfalls and Figure 9 is a schematic of the piping. The table lists the drains that connect to the outfall pipes and includes recommendations for changes to the drain piping. The discussion below gives the reasoning for the recommendations. Buildings 15-199, 15-200 and 15-201 are tunnels leading out of building 15-186.

13.1 Outfall 15-186-OPN-1

This outfall receives flow from sanitary facilities and floor drains. The flows is to a septic tank. The floor drains do not have any source of water. No piping changes or permitting are recommended. No EPA forms were prepared.

13.2 Outfalls 15-186-OPN-2 and 15-186-OPN-3

These outfalls to daylight are drains from the fire water system These outfall should be included in an NOI. No piping changes are recommended. No EPA forms were prepared.

14.0 RECOMMENDATIONS FOR BUILDING 15-194

Table 10 is a list of the drains to the building outfalls and Figure 10 is a schematic of the piping. The table lists the drains that connect to the outfall pipes and includes recommendations for changes to the drain piping. The discussion below gives the reasoning for the recommendations.

14.1 Outfall 15-194-OPN-1

This outfall receives flow from a sink and flows to a canyon. Removing the sink is recommended. No permitting is recommended. No EPA forms were prepared.

14.2 Outfall 15-194-OPN-2

This outfall to daylight is from a drain on a potable water back flow preventer. This outfall should be included in an NOI. No piping changes are recommended. No EPA forms were prepared.

14.3 Outfall 15-194-OPN-3

This outfall to daylight is from the relief valve on a hot water heater. This outfall should be included in an NOI. No piping changes are recommended. No EPA forms were prepared.

15.0 RECOMMENDATIONS FOR BUILDING 15-203

Table 11 is a list of the drains to the building outfalls and Figure 11 is a schematic of the piping. The table lists the

drains that connect to the outfall pipes and includes recommendations for changes to the drain piping. The discussion below gives the reasoning for the recommendations.

15.1 Outfall 15-203-OPN-1

This outfall to daylight is permitted as 04A093. The flow is non-contact cooling water on an air compressor. An EPA Form 2C is attached for this outfall.

15.2 Outfall 15-203-OPN-2

This outfall to daylight is the drain on an air compressor tank. Containerizing the liquid for disposal is recommended. No permitting is recommended. No EPA forms were prepared.

15.3 Outfall 15-203-OPN-3

This outfall to daylight is from a drain on a potable water back flow preventer. This outfall should be included in an NOI. No piping changes are recommended. No EPA forms were prepared.

16.0 RECOMMENDATIONS FOR BUILDING 15-233

Table 12 is a list of the drains to the building outfall and Figure 12 is a schematic of the piping. This outfall flows to a septic tank. No changes or permitting are recommended. No EPA forms are prepared.

17.0 RECOMMENDATIONS FOR BUILDING 15-242

Table 13 is a list of the drains to the building outfalls and Figure 13 is a schematic of the piping. The table lists the drains that connect to the outfall pipes and includes recommendations for changes to the drain piping. The discussion below gives the reasoning for the recommendations.

17.1 Outfall 15-242-OPN-1

The sink to this outfall to daylight is not in use and should be removed. No permitting is recommended. No EPA forms were prepared.

17.2 Outfall 15-242-OPN-2

The hot water heater that vents to this outfall to daylight is not in use and should be removed. No permitting is recommended. No EPA forms were prepared.

18.0 RECOMMENDATIONS FOR BUILDING 15-263

Table 14 is a list of the drains to the building outfalls and Figure 14 is a schematic of the piping. The table lists the drains that connect to the outfall pipes and includes recommendations for changes to the drain piping. The discussion below gives the reasoning for the recommendations.

18.1 Outfall 15-263-OPN-1

This outfall to daylight is from a drain on a potable water back flow preventer. This outfall should be included in an NOI. No piping changes are recommended. No EPA forms were prepared.

18.2 Outfall 15-263-OPN-2

This outfall to daylight is condensate from a chiller. This outfall should be included in an NOI. No piping changes are recommended. No EPA forms were prepared.

19.0 RECOMMENDATIONS FOR BUILDING 15-280

Table 15 is a list of the drains to the building outfalls and Figure 15 is a schematic of the piping. The table lists the drains that connect to the outfall pipes and includes recommendations for changes to the drain piping. The discussion below gives the reasoning for the recommendations.

19.1 Outfall 15-280-OPN-1

This outfall receives flow from sanitary facilities and discharges to a septic tank. No piping changes or permitting are recommended. No EPA forms were prepared.

19.2 Outfall 15-280-OPN-2

This outfall to daylight is a drain on the fire water system. No threat to the environment is caused by these outfalls. No piping changes or permitting are recommended. No EPA forms were prepared.

20.0 RECOMMENDATIONS FOR BUILDING 15-285

Table 16 is a list of the drains to the building outfalls and Figure 16 is a schematic of the piping. The table lists the drains that connect to the outfall pipes and includes recommendations for changes to the drain piping. The discussion below gives the reasoning for the recommendations.

20.1 Outfall 15-285-OPN-1

This outfall receives flow from sanitary facilities and discharges to a septic tank. No piping changes or permitting are recommended. No EPA forms were prepared.

20.2 Outfalls 15-285-OPN-2 and 15-285-OPN-6

These outfalls to daylight receive flow from roof drains. No piping changes or permitting are recommended. No EPA forms were prepared.

20.3 Outfalls 15-285-OPN-3, 15-285-OPN-4 and 15-285-OPN-5

These outfalls to daylight are drains on the fire water system. No piping changes or permitting are recommended. No EPA forms were prepared.

21.0 RECOMMENDATIONS FOR BUILDING 15-305

Table 17 is a list of the drains to the building outfall and Figure 17 is a schematic of the building piping. The table lists the drains that connect to the outfall pipe and includes recommendations for changes to the drain piping. The drains are all from sanitary facilities and go to a septic tank. No changes or permitting are recommended. No EPA forms were prepared.

22.0 RECOMMENDATIONS FOR BUILDING 15-306

Table 18 is a list of the drains to the building outfalls and Figure 18 is a schematic of the piping. The table lists the drains that connect to the outfall pipes and includes recommendations for changes to the drain piping. The discussion below gives the reasoning for the recommendations.

22.1 Outfall 15-306-OPN-1

This outfall to daylight receives flow from floor drains, a roof drain and a water fountain. The water fountain should be removed. The roof drain should be piped as a new outfall. The floor drains should be included in an NOI. No EPA forms were prepared.

22.2 Outfalls 15-306-OPN-2, 15-306-OPN-3, 15-306-OPN-4, 15-306-OPN-5, 15-306-OPN-6 and 15-306-OPN-7

These outfalls to daylight are condensate from chillers. These outfalls should be included in an NOI. No piping changes are recommended. No EPA forms were prepared.

22.3 Outfall 15-306-OPN-8

This outfall to daylight is the drain on an air compressor tank. The liquid should be containerized for disposal. No permitting is recommended. No EPA forms were completed.

22.4 Outfall 15-306-OPN-9

This outfall to daylight is permitted as 04A143 and receives once through cooling water from a laser. No piping changes are recommended. An EPA Form 2C is attached for this outfall.

23.0 RECOMMENDATIONS FOR BUILDING 15-310

Table 19 is a list of the drains to the building outfall and Figure 19 is a schematic of the piping. The table lists the drains that connect to the outfall pipe and includes recommendations for changes to the drain piping. The outfall flows to a septic tank. The source of flow is from sanitary facilities. The floor drains do not receive any flow. No piping changes or permitting are recommended. No EPA forms were prepared.

24.0 RECOMMENDATIONS FOR BUILDING 15-313

Table 20 is a list of the drains to the building outfalls and Figure 20 is a schematic of the piping. The table lists the drains that connect to the outfall pipes and includes

recommendations for changes to the drain piping. The discussion below gives the reasoning for the recommendations.

24.1 Outfall 15-313-OPN-1

This outfall flows to a holding tank outside the building. When the tank receives liquids, a vacuum truck is called to remove the liquids for disposal. No piping changes or permitting are recommended. No EPA forms were prepared.

24.2 Outfalls 15-313-OPN-2, 15-313-OPN-3, 15-313-OPN-4, 15-313-OPN-5, 15-313-OPN-7, 15-313-OPN-8, 15-313-OPN-9, 15-313-OPN-10, 15-313-OPN-11, 15-313-OPN-13 and 15-313-OPN-14

These outfalls to daylight receive flow from roof drains. No piping changes or permitting are recommended. No EPA forms were prepared.

24.3 Outfall 15-313-OPN-6

This outfall receives flow from sanitary facilities and floor drains in the shop area and discharges into a septic tank. Floor drains 1FD11, 1FD12 and 1FD14 should be plugged to eliminate the chance of metal shaving being washed to the septic tank. No permitting is recommended. No EPA forms were prepared.

24.4 Outfall 15-313-OPN-12

This outfall to daylight is condensate from a chiller. This outfall should be included in an NOI. No piping changes are recommended. No EPA forms were prepared.

25.0 CONCLUSION

This document provides the information to characterize the all of the buildings in TA-15. Permit application forms have been completed for the following outfalls (Appendix 3):

Form 2C:

1. 15-183-OPN-3 (06A123)
2. 15-184-OPN-1 (04A139)
3. 15-185-OPN-4 (03A028)
4. 15-203-OPN-1 (04A093)
5. 15-306-OPN-9 (04A143)

Permitting is not recommended for the remaining outfalls, as itemized below:

Foundation drains (French drains):

1. 15-44-OPN-2
2. 15-45-OPN-2
3. 15-184-OPN-2
4. 15-185-OPN-1
5. 15-185-OPN-2

Areas that have drains but no water supply:

1. 15-9
2. 15-27
3. 15-46
4. 15-138

Discharges from back flow preventers:

1. 15-50-OPN-4
2. 15-194-OPN-2
3. 15-203-OPN-3
4. 15-263-OPN-1

Discharges that are only storm water:

1. 15-50-OPN-6
2. 15-183-OPN-2
3. 15-185-OPN-7
4. 15-285-OPN-2
5. 15-285-OPN-6
6. 15-313-OPN-2
7. 15-313-OPN-3
8. 15-313-OPN-4
9. 15-313-OPN-5
10. 15-313-OPN-7
11. 15-313-OPN-8
12. 15-313-OPN-9
13. 15-313-OPN-10
14. 15-313-OPN-11
15. 15-313-OPN-13
16. 15-313-OPN-14

Discharges that are fire water blowdowns:

1. 15-50-OPN-7
2. 15-50-OPN-8
3. 15-185-OPN-6
4. 15-186-OPN-2
5. 15-186-OPN-3
6. 15-280-OPN-2
7. 15-285-OPN-3
8. 15-285-OPN-4
9. 15-285-OPN-5

Discharges from relief valves on hot water heaters:

1. 15-20-OPN-2
2. 15-50-OPN-3
3. 15-194-OPN-3
4. 15-242-OPN-2

Areas that do not have any drains:

1. 15-8	2. 15-22	3. 15-23
4. 15-30	5. 15-41	6. 15-42
7. 15-43	8. 15-47	9. 15-92
10. 15-140	11. 15-141	12. 15-182
13. 15-187	14. 15-188	15. 15-189
16. 15-204	17. 15-213	18. 15-231
19. 15-232	20. 15-239	21. 15-241
22. 15-243	23. 15-245	24. 15-261
25. 15-276	26. 15-289	27. 15-290
28. 15-297	29. 15-307	30. 15-314
31. 15-319	32. 15-320	33. 15-321
34. 15-322	35. 15-323	36. 15-324
37. 15-325	38. 15-326	39. 15-327
40. 15-328	41. 15-329	42. 15-330
43. 15-331	44. 15-332	45. 15-333
46. 15-334	47. 15-335	48. 15-336
49. 15-337	50. 15-338	51. 15-339
52. 15-340	53. 15-341	54. 15-342
55. 15-343	56. 15-344	57. 15-345
58. 15-346	59. 15-347	60. 15-348
61. 15-349	62. 15-350	63. 15-351
64. 15-352	65. 15-353	66. 15-354
67. 15-355	68. 15-356	69. 15-357
70. 15-358	71. 15-359	72. 15-360
73. 15-361	74. 15-362	75. 15-363
76. 15-364	77. 15-365	78. 15-366
79. 15-367	80. 15-368	81. 15-369
82. 15-370	83. 15-371	84. 15-372
85. 15-373	86. 15-374	87. 15-375
88. 15-376	89. 15-377	90. 15-381
91. 15-382	92. 15-383	93. 15-424

Discharges to septic tanks:

1. 15-20-OPN-3	2. 15-40-OPN-3	3. 15-44-OPN-1
4. 15-45-OPN-1	5. 15-50-OPN-5	6. 15-183-OPN-4
7. 15-185-OPN-3	8. 15-186-OPN-1	9. 15-194-OPN-1
10. 15-233-OPN-1	11. 15-280-OPN-1	12. 15-285-OPN-1
13. 15-305-OPN-1	14. 15-310-OPN-1	15. 15-313-OPN-6

Discharges that are condensed water:

1. 15-20-OPN-4	2. 15-40-OPN-4	3. 15-40-OPN-5
4. 15-184-OPN-4	5. 15-263-OPN-2	6. 15-306-OPN-2
7. 15-306-OPN-3	8. 15-203-OPN-2	9. 15-306-OPN-4
10. 15-306-OPN-5	11. 15-306-OPN-6	12. 15-303-OPN-7
13. 15-306-OPN-8	14. 15-313-OPN-12	

Vapor vents:

1. 15-184-OPN-3	2. 15-185-OPN-5

Miscellaneous discharges:

1. 15-20-OPN-1	2. 15-20-OPN-5	3. 15-20-OPN-6
4. 15-50-OPN-1	5. 15-50-OPN-2	6. 15-50-OPN-9
7. 15-183-OPN-1	8. 15-242-OPN-1	9. 15-313-OPN-1

The following outfalls have storm water combined with non-storm water discharges, as defined in Forms 2D, Appendix 3:

1. 15-40-OPN-1	2. 15-40-OPN-2	3. 15-306-OPN-1

Recommended permitting and corrective actions are outlined in Tables 1 through 20 as well as in the above text. Corrective action should be performed as soon as practicable to minimize the chance of unpermitted discharge of pollutants.

TABLE 1: TA 15-20 DRAIN SUMMARY

OUTFALL NUMBER	ID NUMBER	ROOM ACTIVITY	STATUS OR RECOMMENDATIONS	EPA FORM PREPARED
15-20-OPN-1	1S1	SHOP	REMOVE	NO
	1TD1	SHOP	PLUG	
	1WF1	SHOP	REMOVE	
15-20-OPN-2		WATER HEATER	NOI	NO
15-20-OPN-3	1FD1	REST ROOM	NO CHANGE	NO
SEPTIC TANK	1LV1	REST ROOM	NO CHANGE	
	1T1	REST ROOM	NO CHANGE	
	1UR1	REST ROOM	NO CHANGE	
15-20-OPN-4		AIR COND DRAIN	NOI	NO
15-20-OPN-5		DISCONNECTED	REMOVE	NO
15-20-OPN-6		DISCONNECTED	REMOVE	NO

RECOMMENDATIONS REVIEWED WITH M-1, EM-8 & ENG-6

TABLE 2: TA 15-40 DRAIN SUMMARY

OUTFALL NUMBER	ID NUMBER	ROOM ACTIVITY	STATUS OR RECOMMENDATIONS	EPA FORM PREPARED
15-40-OPN-1 04A102	BFD1	PIPE ALLEY	VALVE & SEAL CLOSED	NO
	BFD2	PIPE ALLEY	VALVE & SEAL CLOSED	
	BFD10	PIPE ALLEY	VALVE & SEAL CLOSED	
	BFD11	PIPE ALLEY	VALVE & SEAL CLOSED	
	RD1	ROOF	NEW OUTFALL	
	RD4	ROOF	NEW OUTFALL	
15-40-OPN-2 04A103	BFD3	PIPE ALLEY	VALVE & SEAL CLOSED	NO
	BFD4	PIPE ALLEY	VALVE & SEAL CLOSED	
	BFD5	PIPE ALLEY	VALVE & SEAL CLOSED	
	BFD6	PIPE ALLEY	VALVE & SEAL CLOSED	
	BFD7	PIPE ALLEY	VALVE & SEAL CLOSED	
	BFD8	PIPE ALLEY	VALVE & SEAL CLOSED	
	BFD9	PIPE ALLEY	VALVE & SEAL CLOSED	
	1HB1	PIPE ALLEY	VALVE & SEAL CLOSED	
	RD2	ROOF	NEW OUTFALL	
	RD3	ROOF	NEW OUTFALL	
15-40-OPN-3 SEPTIC TANK	1FD1	REST ROOM	NO CHANGE	NO
	1FD2	REST ROOM	NO CHANGE	
	1FD3	REST ROOM	NO CHANGE	
	1FD4	EQUIP ROOM	NO CHANGE	
	1FD5	EQUIP ROOM	NO CHANGE	
	1LV1	REST ROOM	NO CHANGE	
	1LV2	REST ROOM	NO CHANGE	
	1LV3	REST ROOM	NO CHANGE	
	1S1	KITCHEN	NO CHANGE	
	1S2	JAN CLOSET	NO CHANGE	
	1S3	OFFICE	NO CHANGE	
	1SH1	EQUIP ROOM	NO CHANGE	
	1SH2	EQUIP ROOM	NO CHANGE	
	1SH3	EQUIP ROOM	NO CHANGE	
	1T1	REST ROOM	NO CHANGE	
	1T2	REST ROOM	NO CHANGE	
	1T3	REST ROOM	NO CHANGE	
	1T4	REST ROOM	NO CHANGE	
	1UR1	REST ROOM	NO CHANGE	
	1UR2	REST ROOM	NO CHANGE	

RECOMMENDATIONS REVIEWED WITH M-1, EM-8 & ENG-6

TABLE 2: TA 15-40 DRAIN SUMMARY

OUTFALL NUMBER	ID NUMBER	ROOM ACTIVITY	STATUS OR RECOMMENDATIONS	EPA FORM PREPARED
15-40-OPN-3	1WF1	HALLWAY	NO CHANGE	
CONT	1WF2	HALLWAY	NO CHANGE	
15-40-OPN-4		AIR COND DRAIN	NOI	NO
15-40-OPN-5		AIR COND DRAIN	NOI	NO

RECOMMENDATIONS REVIEWED WITH M-1, EM-8 & ENG-6

TABLE 3: TA 15-44 DRAIN SUMMARY

OUTFALL NUMBER	ID NUMBER	ROOM ACTIVITY	STATUS OR RECOMMENDATIONS	EPA FORM PREPARED
15-44-OPN-1 SEPTIC TANK	1LV1	REST ROOM	NO CHANGE	NO
15-44-OPN-2	1FR1	CONTROL BLDG	NO CHANGE	NO

TABLE 4: TA 15-45 DRAIN SUMMARY

OUTFALL NUMBER	ID NUMBER	ROOM ACTIVITY	STATUS OR RECOMMENDATIONS	EPA FORM PREPARED
15-45-OPN-1	1LV1	REST ROOM	NO CHANGE	NO
SEPTIC TANK	1T1	REST ROOM	NO CHANGE	
15-45-OPN-2	1FR1	CONTROL BLDG	NO CHANGE	NO

TABLE 5: TA 15-50 DRAIN SUMMARY

OUTFALL NUMBER	ID NUMBER	ROOM ACTIVITY	STATUS OR RECOMMENDATIONS	EPA FORM PREPARED
15-50-OPN-1	1EQ1	EQUIP ROOM	PLUG	NO
	1SH1	EQUIP ROOM	TO SEPTIC TK	
15-50-OPN-2	1TD1	SHOP	PLUG	NO
15-50-OPN-3		WATER HEATER	NOI	NO
15-50-OPN-4		BACKFLOW PREV	NOI	NO
15-50-OPN-5	1S1	SHOP	NO CHANGE	NO
SEPTIC TANK	1WF1	SHOP	NO CHANGE	
15-50-OPN-6	1TD2	OUTSIDE	NO CHANGE	NO
15-50-OPN-7		FIRE WATER	NOI	NO
15-50-OPN-8		FIRE WATER	NOI	NO
15-50-OPN-9		DI WATER	NOI	NO

RECOMMENDATIONS REVIEWED WITH M-1, EM-8 & ENG-6

TABLE 6: TA 15-183 DRAIN SUMMARY

OUTFALL NUMBER	ID NUMBER	ROOM ACTIVITY	STATUS OR RECOMMENDATIONS	EPA FORM PREPARED
15-183-OPN-1	BFD1	BASEMENT	TO SAN SEWER	NO
	BFD2	BASEMENT	TO SAN SEWER	
	BFD3	BASEMENT	TO SAN SEWER	
	BFD4	BASEMENT	TO SAN SEWER	
	BFD5	BASEMENT	TO SAN SEWER	
	BFD6	BASEMENT	TO SAN SEWER	
	BFD7	BASEMENT	TO SAN SEWER	
	BFD8	BASEMENT	TO SAN SEWER	
	BFD9	BASEMENT	TO SAN SEWER	
	BFD10	BASEMENT	TO SAN SEWER	
	BFD11	BASEMENT	TO SAN SEWER	
	BFD12	BASEMENT	TO SAN SEWER	
	BFD13	BASEMENT	LOCATE	
	BS1	BASEMENT	TO SAN SEWER	
	BS2	BASEMENT	TO SAN SEWER	
	BS3	BASEMENT	TO SAN SEWER	
	1S1	OFFICE	TO SAN SEWER	
	1S9	OFFICE	TO SAN SEWER	
	BWF1	BASEMENT	TO SAN SEWER	
15-183-OPN-2	RD1	ROOF	NO CHANGE	NO
	RD2	ROOF	NO CHANGE	
	RD3	ROOF	NO CHANGE	
	RD4	ROOF	NO CHANGE	
	RD5	ROOF	NO CHANGE	
15-183-OPN-3 06A123	1EW1	SHOP	NO CHANGE	YES
	1FD1	SHOP	NO CHANGE	
	1S4	PHOTO LAB	NO CHANGE	
	1S5	PHOTO LAB	NO CHANGE	
	1S6	PHOTO LAB	NO CHANGE	
	1S7	SHOP	REMOVE	
	1S8	OFFICE	REMOVE	
	1WF2	SHOP	TO SAN SEWER	
15-183-OPN-4 SEPTIC TANK	1FD2	REST ROOM	NO CHANGE	NO
	1FD3	REST ROOM	NO CHANGE	
	1LV1	REST ROOM	NO CHANGE	
	1LV2	REST ROOM	NO CHANGE	

RECOMMENDATIONS REVIEWED WITH M-1, EM-8 & ENG-6

TABLE 7: TA 15-184 DRAIN SUMMARY

OUTFALL NUMBER	ID NUMBER	ROOM ACTIVITY	STATUS OR RECOMMENDATIONS	EPA FORM PREPARED
15-184-OPN-1 04A139	1FD1	PHERMEX	PLUG	YES
	1FD2	PHERMEX	PLUG	
	1FD3	PHERMEX	PLUG	
	1FD4	PHERMEX	MODIFY	
	1FD5	PHERMEX	PLUG	
	1FD6	PHERMEX	PLUG	
	1FD7	PHERMEX	PLUG	
	1FD8	PHERMEX	PLUG	
	1FD9	PHERMEX	PLUG	
	1FD10	PHERMEX	PLUG	
	1FD11	PHERMEX	PLUG	
15-184-OPN-2		FOUNDATION DR	NO CHANGE	NO
15-184-OPN-3		GAS VENT	NO CHANGE	NO
15-184-OPN-4		CHILLER DRAIN	NOI	NO

RECOMMENDATIONS REVEIWED WITH M-1, EM-8 & ENG-6

TABLE 8: TA 15-185 & 15-202 DRAIN SUMMA

OUTFALL NUMBER	ID NUMBER	ROOM ACTIVITY	STATUS OR RECOMMENDATIONS	EPA FORM PREPARED
15-185-OPN-1		FOUNDATION DR	NO CHANGES	NO
15-185-OPN-2		FOUNDATION DR	NO CHANGES	NO
15-185-OPN-3	1LV1	REST ROOM	NO CHANGES	NO
SEPTIC TANK	1LV2	REST ROOM	NO CHANGES	
	1S1	JAN CLOSET	NO CHANGES	
	1T1	REST ROOM	NO CHANGES	
	1UR1	REST ROOM	NO CHANGES	
	1WF1	HALLWAY	NO CHANGES	
15-185-OPN-4	1FD1	OFFICE	PLUG	YES
03A028	1FD2	OFFICE	PLUG	
	1FD3	OFFICE	PLUG	
	1FD4	OFFICE	PLUG	
	BFD1	EQUIP ROOM	PLUG	
	BFD2	EQUIP ROOM	PLUG	
	BFD3	EQUIP ROOM	PLUG	
	BFD4	EQUIP ROOM	PLUG	
	BFD5	EQUIP ROOM	PLUG	
	BFD6	EQUIP ROOM	PLUG	
	BFD7	EQUIP ROOM	PLUG	
	BFD8	EQUIP ROOM	PLUG	
	BFD9	EQUIP ROOM	PLUG	
	BFD10	EQUIP ROOM	PLUG	
	BFD11	EQUIP ROOM	PLUG	
	BFD12	EQUIP ROOM	PLUG	
	BFD13	EQUIP ROOM	PLUG	
	BFD14	EQUIP ROOM	PLUG	
	BFD15	EQUIP ROOM	PLUG	
	BFD16	EQUIP ROOM	PLUG	
	BFD17	EQUIP ROOM	REMOVE	
	BFD18	EQUIP ROOM	PLUG	
	BS1	EQUIP ROOM	REMOVE	
15-185-OPN-5		VAPOR VENT	NO CHANGES	NO
15-185-OPN-6		FIRE WATER	NOI	NO

RECOMMENDATIONS REVIEWED WITH M-1, EM-8 & ENG-6

TABLE 9: TA 15-186 DRAIN SUMMARY

OUTFALL NUMBER	ID NUMBER	ROOM ACTIVITY	STATUS OR RECOMMENDATIONS	EPA FORM PREPARED
15-186-OPN-1	1FD1	DETECTION	NO CHANGES	NO
	1FD2	DETECTION	NO CHANGES	
	1FD3	DETECTION	NO CHANGES	
	1FD4	DETECTION	NO CHANGES	
	1FD5	DETECTION	NO CHANGES	
	1HW1	DETECTION	NO CHANGES	
	1S1	DETECTION	NO CHANGES	
	1T1	DETECTION	NO CHANGES	
	1WF1	DETECTION	NO CHANGES	
15-186-OPN-2		FIRE WATER	NOI	NO
15-186-OPN-3		FIRE WATER	NOI	NO

TABLE 10: TA 15-194 DRAIN SUMMARY

OUTFALL NUMBER	ID NUMBER	ROOM ACTIVITY	STATUS OR RECOMMENDATIONS	EPA FORM PREPARED
15-194-OPN-1	1S1	LAB	REMOVE	NO
15-194-OPN-2		BACKFLOW PREV	NOI	NO
15-194-OPN-3		WATER HEATER	NOI	NO

TABLE 11: TA 15-203 DRAIN SUMMARY

OUTFALL NUMBER	ID NUMBER	ROOM ACTIVITY	STATUS OR RECOMMENDATIONS	EPA FORM PREPARED
15-203-OPN-1 04A093		EQUIP ROOM	NO CHANGES	YES
15-203-OPN-2		COMP DRAIN	CONTAINERIZE	NO
15-203-OPN-3		BACKFLOW PREV	NOI	NO

RECOMMENDATIONS REVIEWED WITH M-1, EM-8 & ENG-6

TABLE 12: TA 15-233 DRAIN SUMMARY

OUTFALL NUMBER	ID NUMBER	ROOM ACTIVITY	STATUS OR RECOMMENDATIONS	EPA FORM PREPARED
15-233-OPN-1	1FD1	EQUIP ROOM	NO CHANGES	NO
	1HW1	EQUIP ROOM	NO CHANGES	
	1LV1	REST ROOM	NO CHANGES	
	1SH1	REST ROOM	NO CHANGES	
	1T1	REST ROOM	NO CHANGES	
	1UR1	REST ROOM	NO CHANGES	
	1WF1	HALLWAY	NO CHANGES	

TABLE 13: TA 15-242 DRAIN SUMMARY

OUTFALL NUMBER	ID NUMBER	ROOM ACTIVITY	STATUS OR RECOMMENDATIONS	EPA FORM PREPARED
15-242-OPN-1	1S1	MAKE UP BLDG	REMOVE	NO
15-242-OPN-2	1HW1	MAKE UP BLDG	REMOVE	NO

TABLE 14: TA 15-263 DRAIN SUMMARY

OUTFALL NUMBER	ID NUMBER	ROOM ACTIVITY	STATUS OR RECOMMENDATIONS	EPA FORM PREPARED
15-263-OPN-1		BACKFLOW PREV	NO CHANGES	NO
15-263-OPN-2		CHILLER	NO CHANGES	NO

TABLE 15: TA 15-280 DRAIN SUMMARY

OUTFALL NUMBER	ID NUMBER	ROOM ACTIVITY	STATUS OR RECOMMENDATIONS	EPA FORM PREPARED
15-280-OPN-1	1LV1	REST ROOM	NO CHANGES	NO
	1S1	REST ROOM	NO CHANGES	
	1T1	REST ROOM	NO CHANGES	
15-280-OPN-2		FIRE WATER	NO CHANGES	NO

RECOMMENDATIONS REVIEWED WITH M-1, EM-8 & ENG-6

TABLE 16: TA 15-285 DRAIN SUMMARY

OUTFALL NUMBER	ID NUMBER	ROOM ACTIVITY	STATUS OR RECOMMENDATIONS	EPA FORM PREPARED
15-285-OPN-1	1LV1	REST ROOM	NO CHANGES	NO
	1LV2	REST ROOM	NO CHANGES	
	1S1	REST ROOM	NO CHANGES	
	1SH1	REST ROOM	NO CHANGES	
	1T1	REST ROOM	NO CHANGES	
	1UR1	REST ROOM	NO CHANGES	
	1WF1	TEST FACILITY	NO CHANGES	
15-285-OPN-2	RD1	ROOF	NO CHANGES	NO
15-285-OPN-3		FIRE WATER	NO CHANGES	NO
15-285-OPN-4		FIRE WATER	NO CHANGES	NO
15-285-OPN-5		FIRE WATER	NO CHANGES	NO
15-285-OPN-6	RD2	ROOF	NO CHANGES	NO

TABLE 17: TA 15-305 DRAIN SUMMARY

OUTFALL NUMBER	ID NUMBER	ROOM ACTIVITY	STATUS OR RECOMMENDATIONS	EPA FORM PREPARED
15-305-OPN-1	1LV1	REST ROOM	NO CHANGES	NO
	1LV2	REST ROOM	NO CHANGES	
	1S1	KITCHEN	NO CHANGES	
	1S2	JAN CLOSET	NO CHANGES	
	1T1	REST ROOM	NO CHANGES	
	1T2	REST ROOM	NO CHANGES	
	1UR1	REST ROOM	NO CHANGES	
	1WF1	HALLWAY	NO CHANGES	

RECOMMENDATIONS REVIEWED WITH M-1, EM-8 & ENG-6

TABLE 18: TA 15-306 DRAIN SUMMARY

OUTFALL NUMBER	ID NUMBER	ROOM ACTIVITY	STATUS OR RECOMMENDATIONS	EPA FORM PREPARED
15-306-OPN-1	1FD1	TEST BUILDING	NO CHANGES	NO
	1FD2	TEST BUILDING	NO CHANGES	
	1FD3	TEST BUILDING	NO CHANGES	
	1FD4	TEST BUILDING	NO CHANGES	
	1FD5	TEST BUILDING	NO CHANGES	
	RD1	TEST BUILDING	NEW OUTFALL	
	1WF1	TEST BUILDING	REMOVE	
15-306-OPN-2		CHILLER DRAIN	NO CHANGES	NO
15-306-OPN-3		CHILLER DRAIN	NO CHANGES	NO
15-306-OPN-4		CHILLER DRAIN	NO CHANGES	NO
15-306-OPN-5		CHILLER DRAIN	NO CHANGES	NO
15-306-OPN-6		CHILLER DRAIN	NO CHANGES	NO
15-306-OPN-7		CHILLER DRAIN	NO CHANGES	NO
15-306-OPN-8		COMPRESSOR	CONTAINERIZE	NO
15-306-OPN-9		LASER COOLER	NO CHANGES	YES

TABLE 19: TA 15-310 DRAIN SUMMARY

OUTFALL NUMBER	ID NUMBER	ROOM ACTIVITY	STATUS OR RECOMMENDATIONS	EPA FORM PREPARED
15-310-OPN-1	1EW1	OPERATIONS	NO CHANGES	NO
	1FD1	OPERATIONS	NO CHANGES	
	1FD2	OPERATIONS	NO CHANGES	
	1FD3	OPERATIONS	NO CHANGES	
	1FD4	OPERATIONS	NO CHANGES	
	1FD5	OPERATIONS	NO CHANGES	
	1FD6	OPERATIONS	NO CHANGES	
	1FD7	REST ROOM	NO CHANGES	
	1FD8	OPERATIONS	NO CHANGES	
	1LV1	REST ROOM	NO CHANGES	
	1T1	REST ROOM	NO CHANGES	
	1WF1	OPERATIONS	NO CHANGES	

RECOMMENDATIONS REVIEWED WITH M-1, EM-8 & ENG-6

TABLE 20: TA 15-313 DRAIN SUMMARY

OUTFALL NUMBER	ID NUMBER	ROOM ACTIVITY	STATUS OR RECOMMENDATIONS	EPA FORM PREPARED
15-313-OPN-1	1FD1	TEST ROOM	NO CHANGES	NO
	1FD2	TEST ROOM	NO CHANGES	
	1FD3	TEST ROOM	NO CHANGES	
	1FD4	EQUIP ROOM	NO CHANGES	
	1FD5	EQUIP ROOM	NO CHANGES	
	1FD6	EQUIP ROOM	NO CHANGES	
	1FD7	EQUIP ROOM	NO CHANGES	
	1FD8	EQUIP ROOM	NO CHANGES	
	1FD9	EQUIP ROOM	NO CHANGES	
	1FD10	EQUIP ROOM	NO CHANGES	
15-313-OPN-2	RD11	ROOF	NO CHANGES	NO
15-313-OPN-3	RD10	ROOF	NO CHANGES	NO
15-313-OPN-4	RD9	ROOF	NO CHANGES	NO
15-313-OPN-5	RD8	ROOF	NO CHANGES	NO
15-313-OPN-6	1FD11	SHOP	PLUG	NO
	1FD12	SHOP	PLUG	
	1FD13	REST ROOM	NO CHANGES	
	1FD14	REST ROOM	NO CHANGES	
	1FD15	SHOP	PLUG	
	2FD1	EQUIP ROOM	NO CHANGES	
	2FD2	EQUIP ROOM	NO CHANGES	
	1LV1	REST ROOM	NO CHANGES	
	1LV2	REST ROOM	NO CHANGES	
	1S1	JAN CLOSET	NO CHANGES	
	1S2	SHOP	NO CHANGES	
	1S3	SHOP	NO CHANGES	
	1S4	SHOP	NO CHANGES	
	1S5	SHOP	NO CHANGES	
	1SH1	REST ROOM	NO CHANGES	
	1SH2	REST ROOM	NO CHANGES	
	1T1	REST ROOM	NO CHANGES	
	1T2	REST ROOM	NO CHANGES	
	1UR1	REST ROOM	NO CHANGES	
	1WF1	HALLWAY	NO CHANGES	
15-313-OPN-7	RD7	ROOF	NO CHANGES	NO
15-313-OPN-8	RD6	ROOF	NO CHANGES	NO

RECOMMENDATIONS REVIEWED WITH M-1, EM-8 & ENG-6

TABLE 20: TA 15-313 DRAIN SUMMARY

OUTFALL NUMBER	ID NUMBER	ROOM ACTIVITY	STATUS OR RECOMMENDATIONS	EPA FORM PREPARED
15-313-OPN-9	RD5	ROOF	NO CHANGES	NO
15-313-OPN-10	RD4	ROOF	NO CHANGES	NO
15-313-OPN-11	RD1	ROOF	NO CHANGES	NO
	RD2	ROOF	NO CHANGES	
	RD3	ROOF	NO CHANGES	
15-313-OPN-12		CHILLER DRAIN	NO CHANGES	NO
15-313-OPN-13	RD13	ROOF	NO CHANGES	NO
15-313-OPN-14	RD12	ROOF	NO CHANGES	NO

RECOMMENDATIONS REVIEWED WITH M-1, EM-8 & ENG-6

TABLE 21
SUMMARY OF ABBREVIATIONS

ABBREVIATION	MEANING
EQ	Equipment Drain
EW	Eye Wash
FD	Floor Drain
FR	French Drain
HB	Hose Bib
HW	Hot Water Heater
LV	Lavatory
RD	Roof Drain
S	Sink
SH	Shower
T	Toilet
TD	Trough Drain
UR	Urinal
WF	Water Fountain

REPORT 24

TA	BLDG	OUTLET PIPING NUMBER	EPA OUTFALL #	DRAIN #	ROOM DESCRIPTION	FLOW RATE PERIODICITY	SEASONAL	ROOM #	SOURCE TYPES
15	8	15-8			SHOP	NO FLOW	no		NONE
15	9	15-9			SHOP	NO FLOW	no		NONE
15	20	15-20-OPN-1		1S1	SHOP	5 DAYS PER WEEK	no		SINK
15	20	15-20-OPN-1		1TD1	SHOP	5 DAYS PER WEEK	no		FLOOR WASHINGS
15	20	15-20-OPN-1		1WF1	SHOP	5 DAYS PER WEEK	no		DRINKING WATER
15	20	15-20-OPN-2			SHOP	FLOW IS NIL	no		WATER HEATER
15	20	15-20-OPN-3		1FD1	REST ROOM	5 DAYS PER WEEK	no		FLOOR WASHINGS
15	20	15-20-OPN-3		1LV1	REST ROOM	5 DAYS PER WEEK	no		HAND WASHINGS
15	20	15-20-OPN-3		1T1	REST ROOM	5 DAYS PER WEEK	no		SANITARY WASTE
15	20	15-20-OPN-3		1UR1	REST ROOM	5 DAYS PER WEEK	no		SANITARY WASTE
15	20	15-20-OPN-4			AIR CONDITIONER DRAIN	MOSTLY SUMMER	no		CONDENSED WATER
15	20	15-20-OPN-5			DISCONNECTED PIPE	NO FLOW	no		NONE
15	20	15-20-OPN-6			DISCONNECTED PIPE	NO FLOW	no		NONE
15	22	15-22			EXPLOSIVE PREP BUILDING	NO FLOW	no		NONE
15	23	15-23			LAB	NO LFOW	no		NONE
15	27	15-27			CONTROL CHAMBER	NO FLOW	no		NONE
15	30	15-30			GUARD STATION	NO LFOW	no		NONE
15	40	15-40-OPN-1	04A102	BFD01	PIPE ALLEY	DURING LEAKS	no		POTABLE WATER
15	40	15-40-OPN-1	04A102	BFD02	PIPE ALLEY	DURING LEAKS	no		POTABLE WATER
15	40	15-40-OPN-1	04A102	BFD10	PIPE ALLEY	DURING LEAKS	no		POTABLE WATER
15	40	15-40-OPN-1	04A102	BFD11	PIPE ALLEY	DURING LEAKS	no		POTABLE WATER
15	40	15-40-OPN-1	04A102	RD1	ROOF	MOSTLY IN SUMMER	no		RAIN
15	40	15-40-OPN-1	04A102	RD4	ROOF	MOSTLY IN SUMMER	no		RAIN
15	40	15-40-OPN-2	04A103	1HB1	PIPE ALLEY	DURING LEAKS	no		POTABLE WATER
15	40	15-40-OPN-2	04A103	BFD03	PIPE ALLEY	DURING LEAKS	no		POTABLE WATER
15	40	15-40-OPN-2	04A103	BFD04	PIPE ALLEY	DURING LEAKS	no		POTABLE WATER
15	40	15-40-OPN-2	04A103	BFD05	PIPE ALLEY	DURING LEAKS	no		POTABLE WATER
15	40	15-40-OPN-2	04A103	BFD06	PIPE ALLEY	DURING LEAKS	no		POTABLE WATER
15	40	15-40-OPN-2	04A103	BFD07	PIPE ALLEY	DURING LEAKS	no		POTABLE WATER
15	40	15-40-OPN-2	04A103	BFD08	PIPE ALLEY	DURING LEAKS	no		POTABLE WATER
15	40	15-40-OPN-2	04A103	RD2	ROOF	MOSTLY SUMMER	no		RAIN
15	40	15-40-OPN-2	04A103	RD3	ROOF	MOSTLY SUMMER	no		RAIN
15	40	15-40-OPN-3		1FD1	REST ROOM	5 DAYS PER WEEK	no		FLOOR WASHINGS
15	40	15-40-OPN-3		1FD2	REST ROOM	5 DAYS PER WEEK	no		FLOOR WASHINGS
15	40	15-40-OPN-3		1FD3	REST ROOM	5 DAYS PER WEEK	no		FLOOR WASHINGS
15	40	15-40-OPN-3		1FD4	EQUIPMENT ROOM	5 DAYS PER WEEK	no		FLOOR WASHINGS
15	40	15-40-OPN-3		1FD5	EQUIPMENT ROOM	5 DAYS PER WEEK	no		FLOOR WASHINGS
15	40	15-40-OPN-3		1LV1	REST ROOM	5 DAYS PER WEEK	no		HAND WASHINGS

REPORT 24

TA	BLDG	OUTLET PIPING NUMBER	EPA OUTFALL #	DRAIN #	ROOM DESCRIPTION	FLOW RATE PERIODICITY	SEASONAL	ROOM #	SOURCE TYPES
15	40	15-40-OPN-3		1LV2	REST ROOM	5 DAYS PER WEEK	no		HAND WASHINGS
15	40	15-40-OPN-3		1LV3	REST ROOM	5 DAYS PER WEEK	no		HAND WASHINGS
15	40	15-40-OPN-3		1S1	KITCHEN	5 DAYS PER WEEK	no		SANITARY WASTE
15	40	15-40-OPN-3		1S2	JANITOR'S CLOSET	5 DAYS PER WEEK	no		MOP WATER
15	40	15-40-OPN-3		1SH1	EQUIPMENT ROOM	5 DAYS PER WEEK	no		SANITARY WASTE
15	40	15-40-OPN-3		1SH2	EQUIPMENT ROOM	5 DAYS PER WEEK	no		SANITARY WASTE
15	40	15-40-OPN-3		1SH3	EQUIPMENT ROOM	5 DAYS PER WEEK	no		SANITARY WASTE
15	40	15-40-OPN-3		1T1	REST ROOM	5 DAYS PER WEEK	no		SANITARY WASTE
15	40	15-40-OPN-3		1T2	REST ROOM	5 DAYS PER WEEK	no		SANITARY WASTE
15	40	15-40-OPN-3		1T3	REST ROOM	5 DAYS PER WEEK	no		SANITARY WASTE
15	40	15-40-OPN-3		1T4	REST ROOM	5 DAYS PER WEEK	no		SANITARY WASTE
15	40	15-40-OPN-3		1UR1	REST ROOM	5 DAY PER WEEK	no		SANITARY WASTE
15	40	15-40-OPN-3		1UR2	REST ROOM	5 DAYS PER WEEK	no		SANITARY WASTE
15	40	15-40-OPN-3		1WF1	HALLWAY	5 DAYS PER WEEK	no		DRINKING WATER
15	40	15-40-OPN-3		1WF2	HALLWAY	5 DAYS PER WEEK	no		DRINKING WATER
15	40	15-40-OPN-4			AIR CONDITIONER DRAIN	MOSTLY SUMMER	no		CONDENSED WATER
15	40	15-40-OPN-5			AIR CONDITIONER DRAIN	MOSTLY SUMMER	no		CONDENSED WATER
15	41	15-41			STORAGE BUILDING	NO FLOW	no		NONE
15	42	15-42			MAGAZINE	NO FLOW	no		NONE
15	43	15-43			MAGAZINE	NO FLOW	no		NONE
15	44	15-44-OPN-1		1LV1	REST ROOM	5 DAYS PER WEEK	no		HAND WASHINGS
15	44	15-44-OPN-2		1FR1	FRENCH DRAIN	AFTER RAIN STORM	no		RAIN
15	45	15-45-OPN-1		1LV1	REST ROOM	5 DAYS PER WEEK	no		HAND WASHINGS
15	45	15-45-OPN-1		1T1	REST ROOM	5 DAYS PER WEEK	no		SANITARY WATER
15	45	15-45-OPN-2		1FR1	FRENCH DRAIN	AFTER RAIN STORM	no		RAIN
15	46	15-46			LAB	NO FLOW	no		NONE
15	47	15-47			WATER TOWER	NO FLOW	no		NONE
15	50	15-50-OPN-1		1EQ1	EQUUIPMENT ROOM	5 DAYS PER WEEK	no		WATER FROM A SHOWER
15	50	15-50-OPN-1		1SH1	EQUUIPMENT ROOM	5 DAYS PER WEEK	no		SANITARY WASTE
15	50	15-50-OPN-2		1TD1	SHOP	5 DAYS PER WEEK	no		FLOOR WASHINGS
15	50	15-50-OPN-3			WATER HEATER VENT	FLOW IS NIL	no		HOT WATER
15	50	15-50-OPN-4			BACK FLOW PREVENTER	FLOW IS NIL	no		POTABLE WATER
15	50	15-50-OPN-5		1S1	SHOP	5 DAYS PER WEEK	no		HAND WASHINGS
15	50	15-50-OPN-5		1WF1	SHOP	5 DAYS PER WEEK	no		DRINKING WATER
15	50	15-50-OPN-6		1TD2	OUTSIDE	5 DAYS PER WEEK	no		FLOOR WASHINGS
15	50	15-50-OPN-7			FIRE WATER DRAIN	1 OR 2 TIMES PER YEA	no		FIRE WATER
15	50	15-50-OPN-8			FIRE WATER DRAIN	1 OR 2 TIMES PER YEA	no		FIRE WATER
15	50	15-50-OPN-9			DI WATER DRAIN	FLOW IS NIL	no		DIONIZED WATER

REPORT 24

TA	BLDG	OUTLET PIPING NUMBER	EPA OUTFALL #	DRAIN #	ROOM DESCRIPTION	FLOW	RATE	PERIODICITY	SEASONAL	ROOM #	SOURCE TYPES
15	92	15-92			CAMERA CHAMBER			NO FLOW	no		NONE
15	138	15-138			ELECTRONIC BUNKER			NO FLOW	no		NONE
15	140	15-140			STORAGE			NO FLOW	no		NONE
15	141	15-141			PULSER SHELTER			NO FLOW	no		NONE
15	182	15-182			SOLVENT STORAGE			NO FLOW	no		NONE
15	183	15-183-OPN-1		1S1	OFFICE			5 DAYS PER WEEK	no		HAND WASHINGS
15	183	15-183-OPN-1		1S9	OFFICE			5 DAYS PER WEEK	no		HAND WASHINGS
15	183	15-183-OPN-1		BFD01	BASEMENT			5 DAYS PER WEEK	no		FLOOR WASHINGS
15	183	15-183-OPN-1		BFD02	BASEMENT			5 DAYS PER WEEK	no		CHILLER DRAIN
15	183	15-183-OPN-1		BFD03	BASEMENT	2	GPM	5 MIN EVERY HALF HOU	no		NON CONTACT COOLING WATER
15	183	15-183-OPN-1		BFD04	BASEMENT			5 DAYS PER WEEK	no		FLOOR WASHINGS
15	183	15-183-OPN-1		BFD05	BASEMENT			5 DAYS PER WEEK	no		FLOOR WASHINGS
15	183	15-183-OPN-1		BFD06	BASEMENT			5 DAYS PER WEEK	no		FLOOR WASHINGS
15	183	15-183-OPN-1		BFD07	BASEMENT			5 DAYS PER WEEK	no		FLOOR WASHINGS
15	183	15-183-OPN-1		BFD08	BASEMENT	5	GPM	4 HRS PER MONTH	no		NON CONTACT COOLING WATER
15	183	15-183-OPN-1		BFD09	BASEMENT			5 DAY PER WEEK	no		BFP, CHILLER & STEAM PRV'
15	183	15-183-OPN-1		BFD10	BASEMENT			5 DAYS PER WEEK	no		HOT WATER & BFP
15	183	15-183-OPN-1		BFD11	BASEMENT			5 DAYS PER WEEK	no		FLOOR WASHINGS
15	183	15-183-OPN-1		BFD12	BASEMENT			5 DAYS PER WEEK	no		FLOOR WASHINGS
15	183	15-183-OPN-1		BFD13	BASEMENT			MOSTLY SUMMER	no		RAIN
15	183	15-183-OPN-1		BS1	BASEMENT			5 DAYS PER WEEK	no		HAND WASHINGS
15	183	15-183-OPN-1		BS2	BASEMENT			5 DAYS PER WEEK	no		HAND WASHINGS
15	183	15-183-OPN-1		BS3	BASEMENT			5 DAYS PER WEEK	no		HAND WASHINGS
15	183	15-183-OPN-1		BWF1	BASEMENT			5 DAYS PER WEEK	no		DRINKING WATER
15	183	15-183-OPN-2		RD1	ROOF			MOSTLY SUMMER	no		RAIN
15	183	15-183-OPN-2		RD2	ROOF			MOSTLY SUMMER	no		RAIN
15	183	15-183-OPN-2		RD3	ROOF			MOSTLY SUMMER	no		RAIN
15	183	15-183-OPN-2		RD4	ROOF			MOSTLY SUMMER	no		RAIN
15	183	15-183-OPN-2		RD5	ROOF			MOSTLY SUMMER	no		RAIN
15	183	15-183-OPN-3		1EW1	SHOP			5 DAYS PER WEEK	no		POTABLE WATER
15	183	15-183-OPN-3		1FD1	SHOP			5 DAYS PER WEEK	no		FLOOR WASHINGS
15	183	15-183-OPN-3	06A123	1S4	PHOTO LAB	0.0374	MGD	2 TIMES PER WEEK	no		PHOTO RINSE WATER
15	183	15-183-OPN-3	06A123	1S5	PHOTO LAB	2160	GPD	1 OR 2 TIMES PER MON	no		PHOTO RINSE WATER
15	183	15-183-OPN-3	06A123	1S6	PHOTO LAB	360	GPD	1 OR 2 TIMES PER MON	no		PHOTO RINSE WATER
15	183	15-183-OPN-3	06A123	1S7	SHOP			NO FLOW	no		NOT USED
15	183	15-183-OPN-3	06A123	1S8	SHOP			5 DAYS PER WEEK	no		HAND WASHINGS
15	183	15-183-OPN-3	06A123	1WF2	SHOP			5 DAYS PER WEEK	no		DRINKING WATER
15	183	15-183-OPN-4		1FD2	REST ROOM			5 DAYS PER WEEK	no		FLOOR WASHINGS

REPORT 24

TA	BLDG	OUTLET PIPING NUMBER	EPA OUTFALL #	DRAIN #	ROOM DESCRIPTION	FLOW	RATE	PERIODICITY	SEASONAL	ROOM #	SOURCE TYPES
15	183	15-183-OPN-4		1FD3	REST ROOM			5 DAYS PER WEEK	no		FLOOR WASHINGS
15	183	15-183-OPN-4		1LV1	REST ROOM			5 DAYS PER WEEK	no		HAND WASHINGS
15	183	15-183-OPN-4		1LV2	REST ROOM			5 DAYS PER WEEK	no		HAND WASHINGS
15	183	15-183-OPN-4		1LV3	REST ROOM			5 DAYS PER WEEK	no		HAND WASHINGS
15	183	15-183-OPN-4		1S2	JANITOR'S CLOSET			5 DAYS PER WEEK	no		MOP WATER
15	183	15-183-OPN-4		1S3	OFFICE			5 DAYS PER WEEK	no		HAND WASHINGS
15	183	15-183-OPN-4		1SH1	REST ROOM			5 DAYS PER WEEK	no		SANITARY WASTE
15	183	15-183-OPN-4		1SH2	REST ROOM			5 DAYS PER WEEK	no		SANITARY WASTE
15	183	15-183-OPN-4		1T1	REST ROOM			5 DAYS PER WEEK	no		SANITARY WASTE
15	183	15-183-OPN-4		1T2	REST ROOM			5 DAYS PER WEEK	no		SANITARY WASTE
15	183	15-183-OPN-4		1T3	REST ROOM			5 DAYS PER WEEK	no		SANITARY WASTE
15	183	15-183-OPN-4		1UR1	REST ROOM			5 DAYS PER WEEK	no		SANITARY WASTE
15	183	15-183-OPN-4		1UR2	REST ROOM			5 DAYS PER WEEK	no		SANITARY WASTE
15	183	15-183-OPN-4		1WF1	HALLWAY			5 DAYS PER WEEK	no		DRINKING WATER
15	184	15-184-OPN-1	04A139	1FD01	PHERMEX CHAMBER			5 DAYS PER WEEK	no		FLOOR WASHINGS
15	184	15-184-OPN-1	04A139	1FD02	PHERMEX CHAMBER			5 DAYS PER WEEK	no		FLOOR WASHINGS
15	184	15-184-OPN-1	04A139	1FD03	PHERMEX CHAMBER			5 DAYS PER WEEK	no		VACUUM PUMP DRAIN
15	184	15-184-OPN-1	04A139	1FD04	PHERMEX CHAMBER	2400	GPD	2 DAYS PER WEEK	no		NON CONTACT COOLING WATER
15	184	15-184-OPN-1	04A139	1FD05	PHERMEX CHAMBER			5 DAYS PER WEEK	no		FLOOR WASHINGS
15	184	15-184-OPN-1	04A139	1FD06	PHERMEX CHAMBER			5 DAYS PER WEEK	no		FLOOR WASHINGS
15	184	15-184-OPN-1	04A139	1FD07	PHERMEX CHAMBER			5 DAYS PER WEEK	no		FLOOR WASHINGS
15	184	15-184-OPN-1	04A139	1FD08	PHERMEX CHAMBER			5 DAYS PER WEEK	no		CHILLER DRAIN
15	184	15-184-OPN-1	04A139	1FD09	PHERMEX CHAMBER			5 DAYS PER WEEK	no		FLOOR WASHINGS
15	184	15-184-OPN-1	04A139	1FD10	PHERMEX CHAMBER			5 DAYS PER WEEK	no		FLOOR WASHINGS
15	184	15-184-OPN-1	04A139	1FD11	PHERMEX CHAMBER			5 DAYS PER WEEK	no		FLOOR WASHINGS
15	184	15-184-OPN-2			FOUNDATION DRAIN			AFTER STORMS	no		RAIN
15	184	15-184-OPN-3			GAS VENT			NO LIQUIDS	no		GAS VENT
15	184	15-184-OPN-4			CHILLER DRAIN			FLOW IS NIL	yes		CONDENSED WATER
15	185	15-185-OPN-1			FOUNDATION DRAIN			AFTER STORMS	no		RAIN
15	185	15-185-OPN-2			FOUNDATION DRAIN			AFTER STORMS	no		RAIN
15	185	15-185-OPN-3		1LV1	REST ROOM			5 DAYS PER WEEK	no		HAND WASHINGS
15	185	15-185-OPN-3		1LV2	REST ROOM			5 DAYS PER WEEK	no		HAND WASHINGS
15	185	15-185-OPN-3		1S1	REST ROOM			5 DAYS PER WEEK	no		HAND WASHINGS
15	185	15-185-OPN-3		1T1	REST ROOM			5 DAYS PER WEEK	no		SANITARY WASTE
15	185	15-185-OPN-3		1UR1	REST ROOM			5 DAYS PER WEEK	no		SANITARY WASTE
15	185	15-185-OPN-3		1WF1	HALLWAY			5 DAYS PER WEEK	no		DRINKING WATER
15	185	15-185-OPN-4	03A028	1FD1	OFFICE			NO FLOW	no		NONE
15	185	15-185-OPN-4	03A028	1FD2	OFFICE			NO FLOW	no		NONE

REPORT 24

TA	BLDG	OUTLET PIPING NUMBER	EPA OUTFALL #	DRAIN #	ROOM DESCRIPTION	FLOW RATE	PERIODICITY	SEASONAL	ROOM #	SOURCE TYPES
15	185	15-185-OPN-4	03A028	1FD3	OFFICE		NO FLOW	no		NONE
15	185	15-185-OPN-4	03A028	1FD4	OFFICE		NO FLOW	no		NONE
15	185	15-185-OPN-4	03A028	BFD01	EQUIPMENT ROOM		5 DAYS PER WEEK	no		FLOOR WASHINGS
15	185	15-185-OPN-4	03A028	BFD02	EQUIPMENT ROOM		5 DAYS PER WEEK	no		FLOOR WASHINGS
15	185	15-185-OPN-4	03A028	BFD03	EQUIPMENT ROOM		5 DAYS PER WEEK	no		FLOOR WASHINGS
15	185	15-185-OPN-4	03A028	BFD04	EQUIPMENT ROOM		5 DAYS PER WEEK	no		FLOOR WASHINGS
15	185	15-185-OPN-4	03A028	BFD05	EQUIPMENT ROOM		5 DAYS PER WEEK	no		FLOOR WASHINGS
15	185	15-185-OPN-4	03A028	BFD06	EQUIPMENT ROOM		5 DAYS PER WEEK	no		FLOOR WASHING
15	185	15-185-OPN-4	03A028	BFD07	EQUIPMENT ROOM		5 DAYS PER WEEK	no		FLOOR WASHINGS
15	185	15-185-OPN-4	03A028	BFD08	EQUIPMENT ROOM		5 DAYS PER WEEK	no		FLOOR WASHINGS
15	185	15-185-OPN-4	03A028	BFD09	EQUIPMENT ROOM		5 DAYS PER WEEK	no		FLOOR WASHINGS
15	185	15-185-OPN-4	03A028	BFD10	EQUIPMENT ROOM		5 DAYS PER WEEK	no		FLOOR WASHINGS
15	185	15-185-OPN-4	03A028	BFD11	EQUIPMENT ROOM		5 DAYS PER WEEK	no		FLOOR WASHINGS
15	185	15-185-OPN-4	03A028	BFD12	EQUIPMENT ROOM		5 DAYS PER WEEK	no		FLOOR WASHINGS
15	185	15-185-OPN-4	03A028	BFD13	EQUIPMENT ROOM		5 DAYS PER WEEK	no		FLOOR WASHINGS
15	185	15-185-OPN-4	03A028	BFD14	EQUIPMENT ROOM		5 DAYS PER WEEK	no		FLOOR WASHINGS
15	185	15-185-OPN-4	03A028	BFD15	EQUIPMENT ROOM		5 DAYS PER WEEK	no		FLOOR WASHINGS
15	185	15-185-OPN-4	03A028	BFD16	EQUIPMENT ROOM		5 DAYS PER WEEK	no		FLOOR WASHINGS
15	185	15-185-OPN-4	03A028	BFD17	EQUIPMENT ROOM	3000 GPD	5 MIN PER 20 MIN	no		COOLING WATER
15	185	15-185-OPN-4	03A028	BFD18	EQUIPMENT ROOM		5 DAYS PER WEEK	no		FLOOR WASHINGS
15	185	15-185-OPN-4	03A028	BS1	EQUIPMENT ROOM		5 DAYS PER WEEK	no		HAND WASHINGS
15	185	15-185-OPN-5			VAPOR VENT		NO LIQUIDS	no		VAPOR
15	185	15-185-OPN-6			FIRE WATER DRAIN		1 OR 2 TIMES PER YEA	no		FIRE WATER
15	185	15-185-OPN-7		RD1	ROOF		MOSTLY SUMMER	no		RAIN
15	185	15-185-OPN-7		RD2	ROOF		MOSTLY SUMMER	no		RAIN
15	185	15-185-OPN-7		RD3	ROOF		MOSTLY SUMMER	no		RAIN
15	185	15-185-OPN-7		RD4	ROOF		MOSTLY SUMMER	no		RAIN
15	185	15-185-OPN-7		RD5	ROOF		MOSTLY SUMMER	no		RAIN
15	186	15-186-OPN-1		1FD1	DETECTION CHAMBER		5 DAYS PER WEEK	no		FLOOR WASHINGS
15	186	15-186-OPN-1		1FD2	DETECTION CHAMBER		5 DAYS PER WEEK	no		FLOOR WASHINGS
15	186	15-186-OPN-1		1FD3	DETECTION CHAMBER		5 DAYS PER WEEK	no		FLOOR WASHINGS
15	186	15-186-OPN-1		1FD4	DETECTION CHAMBER		5 DAYS PER WEEK	no		FLOOR WASHINGS
15	186	15-186-OPN-1		1FD5	DETECTION CHAMBER		5 DAYS PER WEEK	no		FLOOR WASHINGS
15	186	15-186-OPN-1		1HW1	DETECTION CHAMBER		FLOW IS NIL	no		HOT WATER
15	186	15-186-OPN-1		1S1	DETECTION CHAMBER		5 DAYS PER WEEK	no		HAND WASHINGS
15	186	15-186-OPN-1		1T1	DETECTION CHAMBER		5 DAYS PER WEEK	no		SANITARY WASTE
15	186	15-186-OPN-1		1WF1	DETECTION CHAMBER		5 DAYS PER WEEK	no		DRINKING WATER
15	186	15-186-OPN-2			FIRE WATER DRAIN		1 OR 2 TIMES PER YEA	no		FIRE WATER

REPORT 24

TA	BLDG	OUTLET PIPING NUMBER	EPA OUTFALL #	DRAIN #	ROOM DESCRIPTION	FLOW RATE	PERIODICITY	SEASONAL	ROOM #	SOURCE TYPES
15	186	15-186-OPN-3			FIRE WATER DRAIN		1 OR 2 TIMES PER YEA	no		FIRE WATER
15	187	15-187			MOSAIC MANHOLE		NO FLOW	no		NONE
15	188	15-188			MOSAIC MANHOLE		NO FLOW	no		NONE
15	189	15-189			FIRING POINT SUBSTATION		NO FLOW	no		NONE
15	194	15-194-OPN-1		1S1	REST ROOM		5 DAYS PER WEEK	no		HAND WASHINGS
15	194	15-194-OPN-2			BACK FLOW PREVENTER		FLOW IS NIL	no		POTABLE WATER
15	194	15-194-OPN-3			WATER HEATER VENT		FLOW IS NIL	no		HOT WATER
15	199	15-199			TUNNEL		NO FLOW	no		NONE
15	200	15-200			TUNNEL		NO FLOW	no		NONE
15	201	15-201			TUNNEL		NO FLOW	no		NONE
15	202	15-202	03A028		COOLING TOWER		SEE BLDG 15-185	no		COOLING WATER
15	203	15-203-OPN-1	04A093		EQUIPMENT ROOM	2.5 GPM	5 DAYS PER WEEK	no		NON CONTACT COOLING WATER
15	203	15-203-OPN-2			COMPRESSOR BLOWDOWN		5 DAYS PER WEEK	no		CONDENSED WATER
15	203	15-203-OPN-3			BACK FLOW PREVENTER		FLOW IS NIL	no		POTABLE WATER
15	204	15-204			CDU CHAMBER		NO FLOW	no		NONE
15	213	15-213			PLATFORM		NO FLOW	no		NONE
15	231	15-231			RADIO STATION		NO FLOW	no		NONE
15	232	15-232			GAS CHAMBER		NO FLOW	no		NONE
15	233	15-233-OPN-1		1FD1	EQUIPMENT ROOM		5 DAYS PER WEEK	no		FLOOR WASHINGS
15	233	15-233-OPN-1		1HW1	EQUIPMENT ROOM		FLOW IS NIL	no		HOT WATER
15	233	15-233-OPN-1		1LV1	REST ROOM		5 DAYS PER WEEK	no		HAND WASHINGS
15	233	15-233-OPN-1		1SH1	REST ROOM		5 DAYS PER WEEK	no		SANITARY WASTE
15	233	15-233-OPN-1		1T1	REST ROOM		5 DAYS PER WEEK	no		SANITARY WASTE
15	233	15-233-OPN-1		1UR1	REST ROOM		5 DAYS PER WEEK	no		SANITARY WASTE
15	233	15-233-OPN-1		1WF1	HALLWAY		5 DAYS PER WEEK	no		DRINKING WATER
15	239	15-239			PASSAGEWAY		NO LFOW	no		NONE
15	241	15-241			READY MAGAZINE		NO FLOW	no		NONE
15	242	15-242-OPN-1		1S1	MAKE UP BUILDING		5 DAYS PER WEEK	no		HAND WASHINGS
15	242	15-242-OPN-2		1HW1	MAKE UP BUILDING		FLOW IS NIL	no		HOT WATER
15	243	15-243			MAIN MAGAZINE		NO FLOW	no		NONE
15	245	15-245			PASSAGEWAY		NO FLOW	no		NONE
15	261	15-261			OIL STARAGE TANK		NO FLOW	no		NONE
15	263	15-263-OPN-1			BACK FLOW PREVENTER		FLOW IS NIL	no		POTABLE WATER
15	263	15-263-OPN-2			CHILLER DRAIN		FLOW IS NIL	no		CHILLED WATER
15	276	15-276			FIRING POINT CHAMBER		NO FLOW	no		NONE
15	280	15-280-OPN-1		1LV1	REST ROOM		5 DAYS PER WEEK	no		HAND WASHINGS
15	280	15-280-OPN-1		1S1	REST ROOM		5 DAYS PER WEEK	no		HAND WASHINGS
15	280	15-280-OPN-1		1T1	REST ROOM		5 DAYS PER WEEK	no		SANITARY WASTE

REPORT 24

TA	BLDG	OUTLET PIPING NUMBER	EPA OUTFALL #	DRAIN #	ROOM DESCRIPTION	FLOW RATE PERIODICITY	SEASONAL	ROOM #	SOURCE TYPES
15	280	15-280-OPN-2			FIRE WATER DRAIN	1 OR 2 TIMES PER YEA	no		FIRE WATER
15	285	15-285-OPN-1		1LV1	REST ROOM	5 DAYS PER WEEK	no		HAND WASHINGS
15	285	15-285-OPN-1		1LV2	REST ROOM	5 DAYS PER WEEK	no		HAND WASHINGS
15	285	15-285-OPN-1		1S1	REST ROOM	5 DAYS PER WEEK	no		HAND WASHINGS
15	285	15-285-OPN-1		1SH1	REST ROOM	5 DAYS PER WEEK	no		SANITARY WASTE
15	285	15-285-OPN-1		1T1	REST ROOM	5 DAYS PER WEEK	no		SANITARY WASTE
15	285	15-285-OPN-1		1UR1	REST ROOM	5 DAYS PER WEEK	no		SANITARY WASTE
15	285	15-285-OPN-1		1WF1	WATER FOUNTAIN	5 DAYS PER WEEK	no		DRINKING WATER
15	285	15-285-OPN-2		RD1	ROOF	MOSTLY SUMMER	no		RAIN
15	285	15-285-OPN-3			FIRE WATER DRAIN	1 OR 2 TIMES PER YEA	no		FIRE WATER
15	285	15-285-OPN-4			FIRE WATER DRAIN	1 OR 2 TIMES PER YEA	no		FIRE WATER
15	285	15-285-OPN-5			FIRE WATER DRAIN	1 OR 2 TIMES PER YEA	no		FIRE WATER
15	285	15-285-OPN-6		RD2	ROOF	MOSTLY SUMMER	no		RAIN
15	289	15-289			CAMERA BUNKER	NO FLOW	no		NONE
15	290	15-290			SIGNAL CHAMBER	NO FLOW	no		NONE
15	297	15-297			SHOP TRAILER	NO FLOW	no		NONE
15	305	15-305-OPN-1		1LV1	REST ROOM	5 DAYS PER WEEK	no		HAND WASHINGS
15	305	15-305-OPN-1		1LV2	REST ROOM	5 DAYS PER WEEK	no		HAND WASHINGS
15	305	15-305-OPN-1		1S1	KITCHEN	5 DAYS PER WEEK	no		DISH WASHINGS
15	305	15-305-OPN-1		1S2	JANITOR'S CLOSET	5 DAYS PER WEEK	no		MOP WATER
15	305	15-305-OPN-1		1T1	REST ROOM	5 DAYS PER WEEK	no		SANITARY WASTE
15	305	15-305-OPN-1		1T2	REST ROOM	5 DAYS PER WEEK	no		SANITARY WASTE
15	305	15-305-OPN-1		1UR1	REST ROOM	5 DAYS PER WEEK	no		SANITARY WASTE
15	305	15-305-OPN-1		1WF1	HALLWAY	5 DAYS PER WEEK	no		DRINKING WATER
15	306	15-306-OPN-1		1FD1	TEST BUILDING	5 DAYS PER WEEK	no		FLOOR WASHINGS
15	306	15-306-OPN-1		1FD2	TEST BUILDING	5 DAYS PER WEEK	no		FLOOR WASHINGS
15	306	15-306-OPN-1		1FD3	TEST BUILDING	5 DAYS PER WEEK	no		FLOOR WASHINGS
15	306	15-306-OPN-1		1FD4	TEST BUILDING	5 DAYS PER WEEK	no		FLOOR WASHINGS
15	306	15-306-OPN-1		1FD5	TEST BUILDING	5 DAYS PER WEEK	no		FLOOR WASHINGS
15	306	15-306-OPN-1		1WF1	TEST BUILDING	5 DAYS PER WEEK	no		DRINKING WATER
15	306	15-306-OPN-1		RD1	TEST BUILDING	MOSTLY SUMMER	no		RAIN
15	306	15-306-OPN-2			CHILLLER DRAIN	MOSTLY SUMMER	no		CONDENSED WATER
15	306	15-306-OPN-3			CHILLLER DRAIN	MOSTLY SUMMER	no		CONDENSED WATER
15	306	15-306-OPN-4			CHILLLER DRAIN	MOSTLY SUMMER	no		CONDENSED WATER
15	306	15-306-OPN-5			CHILLLER DRAIN	MOSTLY SUMMER	no		CONDENSED WATER
15	306	15-306-OPN-6			CHILLLER DRAIN	MOSTLY SUMMER	no		CONDENSED WATER
15	306	15-306-OPN-7			CHILLLER DRAIN	MOSTLY SUMMER	no		CONDENSED WATER
15	306	15-306-OPN-8			COMPRESSOR DRAIN	MOSTLY SUMMER	no		CONDENSED WATER

REPORT 24

TA	BLDG	OUTLET PIPING NUMBER	EPA OUTFALL #	DRAIN #	ROOM DESCRIPTION	FLOW	RATE	PERIODICITY	SEASONAL	ROOM #	SOURCE TYPES
15	306	15-306-OPN-9	04A143		LASER COOLING WATER	50	GPD	1 DAY/WK 52 WK/YR	no		NON CONTACT COOLING WATER
15	307	15-307			TRANSPORTAINER			NO FLOW	no		NONE
15	310	15-310-OPN-1		1EW1	OPERATIONS BUILDING			5 DAYS PER WEEK	no		POTABLE WATER
15	310	15-310-OPN-1		1FD1	OPERATIONS BUILDING			5 DAYS PER WEEK	no		FLOOR WASHINGS
15	310	15-310-OPN-1		1FD2	OPERATIONS BUILDING			5 DAYS PER WEEK	no		FLOOR WASHINGS
15	310	15-310-OPN-1		1FD3	OPERATIONS BUILDING			5 DAYS PER WEEK	no		FLOOR WASHINGS
15	310	15-310-OPN-1		1FD4	OPERATIONS BUILDING			5 DAYS PER WEEK	no		FLOOR WASHINGS
15	310	15-310-OPN-1		1FD5	OPERATIONS BUILDING			5 DAYS PER WEEK	no		FLOOR WASHINGS
15	310	15-310-OPN-1		1FD6	OPERATIONS BUILDING			5 DAYS PER WEEK	no		FLOOR WASHINGS
15	310	15-310-OPN-1		1FD7	REST ROOM			5 DAYS PER WEEK	no		FLOOR WASHINGS
15	310	15-310-OPN-1		1FD8	OPERATIONS BUILDING			5 DAYS PER WEEK	no		FLOOR WASHINGS
15	310	15-310-OPN-1		1LV1	REST ROOM			5 DAYS PER WEEK	no		HAND WASHINGS
15	310	15-310-OPN-1		1T1	REST ROOM			5 DAYS PER WEEK	no		SANITARY WASTE
15	310	15-310-OPN-1		1WF1	OPERATIONS ROOM			5 DAYS PER WEEK	no		DRINKING WATER
15	313	15-313-OPN-1		1FD01	TEST ROOM			5 DAYS PER WEEK	no		FLOOR WASHINGS
15	313	15-313-OPN-1		1FD02	TEST ROOM			5 DAYS PER WEEK	no		FLOOR WASHINGS
15	313	15-313-OPN-1		1FD03	TEST ROOM			5 DAYS PER WEEK	no		FLOOR WASHINGS
15	313	15-313-OPN-1		1FD04	EQUIPMENT ROOM			5 DAYS PER WEEK	no		FLOOR WASHINGS
15	313	15-313-OPN-1		1FD05	EQUIPMENT ROOM			5 DAYS PER WEEK	no		FLOOR WASHINGS
15	313	15-313-OPN-1		1FD06	EQUIPMENT ROOM			5 DAYS PER WEEK	no		FLOOR WASHINGS
15	313	15-313-OPN-1		1FD07	EQUIPMENT ROOM			5 DAYS PER WEEK	no		FLOOR WASHINGS
15	313	15-313-OPN-1		1FD08	EQUIPMENT ROOM			5 DAYS PER WEEK	no		FLOOR WASHINGS
15	313	15-313-OPN-1		1FD09	EQUIPMENT ROOM			5 DAYS PER WEEK	no		FLOOR WASHINGS
15	313	15-313-OPN-1		1FD10	EQUIPMENT ROOM			5 DAYS PER WEEK	no		FLOOR WASHINGS
15	313	15-313-OPN-10		RD04	ROOF			5 DAYS PER WEEK	no		RAIN
15	313	15-313-OPN-11		RD01	ROOF			MOSTLY SUMMER	no		RAIN
15	313	15-313-OPN-11		RD02	ROOF			MOSTLY SUMMER	no		RAIN
15	313	15-313-OPN-11		RD03	ROOF			MOSTLY SUMMER	no		RAIN
15	313	15-313-OPN-12			CHILLER DRAIN			MOSTLY SUMMER	no		CONDENSED WATER
15	313	15-313-OPN-13		RD13	ROOF			MOSTLY SUMMER	no		RAIN
15	313	15-313-OPN-14		RD12	ROOF			MOSTLY SUMMER	no		RAIN
15	313	15-313-OPN-2		RD11	ROOF			MOSTLY SUMMER	no		RAIN
15	313	15-313-OPN-3		RD10	ROOF			MOSTLY SUMMER	no		RAIN
15	313	15-313-OPN-4		RD09	ROOF			MOSTLY SUMMER	no		RAIN
15	313	15-313-OPN-5		RD08	ROOF			MOSTLY SUMMER	no		RAIN
15	313	15-313-OPN-6		1FD11	SHOP			MOSTLY SUMMER	no		RAIN
15	313	15-313-OPN-6		1FD12	SHOP			MOSTLY SUMMER	no		RAIN
15	313	15-313-OPN-6		1FD13	REST ROOM			MOSTLY SUMMER	no		RAIN

REPORT 24

TA	BLDG	OUTLET PIPING NUMBER	EPA OUTFALL #	DRAIN #	ROOM DESCRIPTION	FLOW RATE	PERIODICITY	SEASONAL	ROOM #	SOURCE TYPES
15	313	15-313-OPN-6		1FD14	REST ROOM		MOSTLY SUMMER	no		RAIN
15	313	15-313-OPN-6		1FD15	SHOP		MOSTLY SUMMER	no		RAIN
15	313	15-313-OPN-6		1LV1	REST ROOM		5 DAYS PER WEEK	no		HAND WASHINGS
15	313	15-313-OPN-6		1LV2	REST ROOM		5 DAYS PER WEEK	no		HAND WASHINGS
15	313	15-313-OPN-6		1S1	JANITOR'S CLOSET		5 DAYS PER WEEK	no		MOP WATER
15	313	15-313-OPN-6		1S2	SHOP		5 DAYS PER WEEK	no		HAND WASHINGS
15	313	15-313-OPN-6		1S3	SHOP		5 DAYS PER WEEK	no		HAND WASHINGS
15	313	15-313-OPN-6		1S4	SHOP		5 DAYS PER WEEK	no		HAND WASHINGS
15	313	15-313-OPN-6		1S5	SHOP		5 DAYS PER WEEK	no		HAND WASHINGS
15	313	15-313-OPN-6		1SH1	REST ROOM		5 DAYS PER WEEK	no		SANITARY WASTE
15	313	15-313-OPN-6		1SH2	REST ROOM		5 DAYS PER WEEK	no		SANITARY WASTE
15	313	15-313-OPN-6		1T1	REST ROOM		5 DAYS PER WEEK	no		SANITARY WASTE
15	313	15-313-OPN-6		1T2	REST ROOM		5 DAYS PER WEEK	no		SANITARY WASTE
15	313	15-313-OPN-6		1UR1	REST ROOM		5 DAYS PER WEEK	no		SANITARY WASTE
15	313	15-313-OPN-6		1WF1	HALLWAY		5 DAYS PER WEEK	no		DRINKING WATER
15	313	15-313-OPN-6		2FD1	EQUIPMENT ROOM		5 DAYS PER WEEK	no		FLOOR WASHINGS
15	313	15-313-OPN-6		2FD2	EQUIPMENT ROOM		5 DAYS PER WEEK	no		FLOOR WASHINGS
15	313	15-313-OPN-7		RD07	ROOF		MOSTLY SUMMER	no		RAIN
15	313	15-313-OPN-8		RD06	ROOF		MOSTLY SUMMER	no		RAIN
15	313	15-313-OPN-9		RD05	ROOF		MOSTLY SUMMER	no		RAIN
15	314	15-314			OPTICS LAB		NO FLOW	no		NONE
15	319	15-319			CDU BUNKER		NO FLOW	no		NONE
15	320	15-320			PORTABLE SHELTER		NO FLOW	no		NONE
15	321	15-321			MARX TANK		NO FLOW	no		NONE
15	322	15-322			MINERAL OIL TANK		NO FLOW	no		NONE
15	323	15-323			MINERAL TANK		NO FLOW	no		NONE
15	324	15-324			MINERAL TANK		NO FLOW	no		NONE
15	325	15-325			MINERAL OIL TANK		NO FLOW	no		NONE
15	326	15-326			VALVE HOUSE		NO FLOW	no		NONE
15	327	15-327			MORGAN SHED		NO FLOW	no		NONE
15	328	15-328			TRANSPORTAINER		NO FLOW	no		NONE
15	329	15-329			TRANSPORTAINER		NO FLOW	no		NONE
15	330	15-330			TARGET		NO FLOW	no		NONE
15	331	15-331			ELEC POWER SHELTER		NO FLOW	no		NONE
15	332	15-332			TRANSPORTAINER		NO FLOW	no		NONE
15	333	15-333			TRANSPORTAINER		NO FLOW	no		NONE
15	334	15-334			TRANSPORTAINER		NO FLOW	no		NONE
15	335	15-335			TRANSPORTAINER		NO FLOW	no		NONE

REPORT 24

IA	BLDG	OUTLET PIPING NUMBER	EPA OUTFALL #	DRAIN #	ROOM DESCRIPTION	FLOW RATE	PERIODICITY	SEASONAL	ROOM #	SOURCE TYPES
15	336	15-336			TRANSPORTAINER		NO FLOW	no		NONE
15	337	15-337			TRANSPORTAINER		NO FLOW	no		NONE
15	338	15-338			PORTABLE SHELTER		NO FLOW	no		NONE
15	339	15-339			PORTABLE SHELTER		NO FLOW	no		NONE
15	340	15-340			PORTABLE SHELTER		NO FLOW	no		NONE
15	341	15-341			TRANSPORTAINER		NO FLWO	no		NONE
15	342	15-342			TRANSPORTAINER		NO FLWO	no		NONE
15	343	15-343			TRANSPORTAINER		NO FLOW	no		NONE
15	344	15-344			STORAGE TRAILER		NO FLOW	no		NONE
15	345	15-345			TRANSPORTAINER		NO FLOW	no		NONE
15	346	15-346			TRANSPORTAINER		NO FLOW	no		NONE
15	347	15-347			TRANSPORTAINER		NO FLOW	no		NONE
15	348	15-348			TRANSPORTAINER		NO FLOW	no		NONE
15	349	15-349			STORAGE SHED		NO FLOW	no		NONE
15	350	15-350			TRANSPORTAINER		NO FLOW	no		NONE
15	351	15-351			TRANSPORTAINER		NO FLOW	no		NONE
15	352	15-352			TRANSPORTAINER		NO FLOW	no		NONE
15	353	15-353			TRANSPORTAINER		NO FLOW	no		NONE
15	354	15-354			TRANSPORTAINER		NO FLOW	no		NONE
15	355	15-355			TRANSPORTAINER		NO FLOW	no		NONE
15	356	15-356			TRANSPORTAINER		NO FLOW	no		NONE
15	357	15-357			TRANSPORTAINER		NO FLOW	no		NONE
15	358	15-358			TRANSPORTAINER		NO FLOW	no		NONE
15	359	15-359			TRANSPORTAINER		NO FLOW	no		NONE
15	360	15-360			TRANSPORTAINER		NO FLOW	no		NONE
15	361	15-361			TRANSPORTAINER		NO FLOW	no		NONE
15	362	15-362			TRANPORTAINER		NO FLOW	no		NONE
15	363	15-363			TRANSPORTAINER		NO FLOW	no		NONE
15	364	15-364			TRANSPORTAINER		NO FLOW	no		NONE
15	365	15-365			TRANSPORTAINER		NO FLOW	no		NONE
15	366	15-366			TRANSPORTAINER		NO FLOW	no		NONE
15	367	15-367			TRANSPORTAINER		NO FLOW	no		NONE
15	368	15-368			TRANSPORTAINER		NO FLOW	no		NONE
15	369	15-369			TRANSPORTAINER		NO FLOW	no		NONE
15	370	15-370			TRANSPORTAINER		NO FLOW	no		NONE
15	371	15-371			PASSAGEWAY		NO FLOW	no		NONE
15	372	15-372			TRANSPORTAINER		NO FLOW	no		NONE
15	373	15-373			TRANSPORTAINER		NO FLOW	no		NONE

REPORT 24

TA	BLDG	OUTLET PIPING NUMBER	EPA OUTFALL #	DRAIN #	ROOM DESCRIPTION	FLOW RATE	PERIODICITY	SEASONAL	ROOM #	SOURCE TYPES
15	374	15-374			SOLVENT STORAGE SHED		NO FLOW	no		NONE
15	375	15-375			TRANSPORTAINER		NO FLOW	no		NONE
15	376	15-376			PORTABLE SHELTER		NO FLOW	no		NONE
15	377	15-377			STORAGE SHED		NO FLOW	no		NONE
15	381	15-381			TRANSPORTAINER		NO FLOW	no		NONE
15	382	15-382			TRANSPORTAINER		NO FLOW	no		NONE
15	383	15-383			TRANSPORTAINER		NO FLOW	no		NONE

Please print or type in the unshaded areas only

EPA I.D. NUMBER NM0890010515

Form Approved. OMB No. 2040-0086. Approval Expires 11-30-87

FORM 2C NPDES

EPA

U.S. ENVIRONMENTAL PROTECTION AGENCY
APPLICATION FOR PERMIT TO DISCHARGE WASTEWATER
EXISTING MANUFACTURING, COMMERCIAL, MINING AND SILVICULTURAL OPERATIONS
Consolidated Permits Program

I. OUTFALL LOCATION

For each outfall, list the latitude and longitude of its location to the nearest 15 seconds and the name of the receiving water.

A. OUTFALL NUMBER (list)	B. LATITUDE 1. DEG	2. MIN	3. SEC	C. LONGITUDE 1. DEG	2. MIN	3. SEC	D. RECEIVING WATER (name)
03A028	35	49	58	106	17	46	WATER CANYON

II. FLOWS, SOURCES OF POLLUTION, AND TREATMENT TECHNOLOGIES

A. Attach a line drawing showing the water flow through the facility. Indicate sources of intake water, operations contributing wastewater to the effluent, and treatment units labeled to correspond to the more detailed descriptions in Item B. Construct a water balance on the line drawing by showing average flows between intakes, operations, treatment units, and outfalls. If a water balance cannot be determined (*e.g., for certain mining activities*), provide a pictorial description of the nature and amount of any sources of water and any conection or treatment measures.

B. For each outfall, provide a description of: (1) All operations contributing wastewater to the effluent, including process wastewater, sanitary wastewater, cooling water, and storm water runoff; (2) The average flow contributed by each operation; and (3) The treatment received by the wastewater. Continue on additional sheets if necessary.

1. OUTFALL NO. (list)	2. OPERATIONS CONTRIBUTING FLOW a. OPERATION (list)	b. AVERAGE FLOW (include units)	3. TREATMENT a. DESCRIPTION	b. LIST CODES FROM TABLE 2C-1	
028	TA 15-202 COOLING TOWER BLOW DOWN	2 GPM	NONE		

OFFICIAL USE ONLY (effluent guidelines sub-categories)

CONTINUED FROM THE FRONT

C. Except for storm runoff, leaks, or spills, are any of the discharges described in Items II-A or B intermittent or seasonal?

X YES *(complete the following table)* ☐ NO *(go to Section III)*

1. OUTFALL NUMBER *(list)*	2. OPERATION(s) CONTRIBUTING FLOW *(list)*	3. FREQUENCY a. DAYS PER WEEK *(specify average)*	3. FREQUENCY b. MONTHS PER YEAR *(specify average)*	4. FLOW a. FLOW RATE *(in mgd)* 1. LONG TERM AVERAGE	4. FLOW a. FLOW RATE *(in mgd)* 2. MAXIMUM DAILY	4. FLOW b. TOTAL VOLUME *(specify with units)* 1. LONG TERM AVERAGE	4. FLOW b. TOTAL VOLUME *(specify with units)* 2. MAXIMUM DAILY	4. FLOW c. DURATION *(in days)*
028	COOLING TOWER BLOWDOWN	7	12	.003X	.004X	3000 GPD	4000 GPD	5 MIN PER 20 M

III. PRODUCTION

A. Does an effluent guideline limitation promulgated by EPA under Section 304 of the Clean Water Act apply to your facility?

☐ YES *(complete Item III-B)* X NO *(to to Section IV)*

B. Are the limitations in the applicable effluent guideline expressed in terms of production *(or other measure of operation)*?

☐ YES *(complete Item III-C)* X NO *(go to Section IV)*

C. If you answered "yes" to Item III-B, list the quantity which represents an actual measurement of your level of production, expressed in the terms and units used in the applicable effluent guideline, and indicate the affected outfalls.

1. AVERAGE DAILY PRODUCTION a. QUANTITY PER DAY	b. UNITS OF MEASURE	c. OPERATION, PRODUCT, MATERIAL, ETC. *(specify)*	2. AFFECTED OUTFALLS *(list outfall numbers)*
NA			

IV. IMPROVEMENTS

A. Are you now required by any Federal, State or local authority to meet any implementation schedule for the construction, upgrading or operation of wastewater treatment equipment or practices or any other environmental programs which may affect the discharges described in this application? This includes, but is not limited to, permit conditions, administrative or enforcement orders, enforcement compliance schedule letters, stipulations, court orders, and grant or loan conditions.

☐ YES *(complete the following table)* X NO *(go to Item IV-B)*

1. IDENTIFICATION OF CONDITION, AGREEMENT, ETC.	2. AFFECTED OUTFALLS a. NO.	2. AFFECTED OUTFALLS b. SOURCE OF DISCHARGE	3. BRIEF DESCRIPTION OF PROJECT	4. FINAL COMPLIANCE DATE a. REQUIRED	4. FINAL COMPLIANCE DATE b. PROJECTED

B. OPTIONAL. You may attach additional sheets describing any additional water pollution control programs *(or other environmental projects which may affect your discharges)* you now have underway or which you plan. Indicate whether each program is now underway or planned, and indicate your actual or planned schedules for construction. ☐ MARK "X" IF DESCRIPTION OF ADDITIONAL CONTROL PROGRAMS IS ATTACHED

 CONTINUE ON PAGE 3

EPA I.D. NUMBER (copy from Item 1 of Form 1)
NM0890010515

Form Approved
OMB No. 2040-0086
Approval expires 7-31-85

V. INTAKE AND EFFLUENT CHARACTERISTICS

A, B, & C. See instructions before proceeding – Complete one set of tables for each outfall – Annotate the outfall number in the space provided. NOTE: Tables V-A, V-B, and V-C are included on separate sheets numbered V-1 through V-9.

D. Use the space below to list any of the pollutants listed in Table 2c-3 of the instructions, which you know or have reason to believe is discharged or may be discharged from any outfall. For every pollutant you list, briefly describe the reasons you believe it to be present and report any analytical data in your possession.

1. POLLUTANT	2. SOURCE	1. POLLUTANT	2. SOURCE
NA			

VI. POTENTIAL DISCHARGES NOT COVERED BY ANALYSIS

Is any pollutant listed in Item V-C a substance or a component of a substance which you currently use or manufacture as an intermediate or final product or byproduct?

☐ YES (list all such pollutants below) ☒ NO (go to Item VI-B)

CONTINUED FROM THE FRONT

VII. BIOLOGICAL TOXICITY TESTING DATA

Do you have any knowledge or reason to believe that any biological test for acute or chronic toxicity has been made on any of your discharges or receiving water in relation to your discharge within the last 3 years?

☐ YES *(identify the test(s) and describe their purposes below)* X NO *(go to Section VIII)*

VIII. CONTRACT ANALYSIS INFORMATION

Were any of the analyses reported in Item V performed by a contract laboratory or consulting firm?

☐ YES *(list the name, address, and telephone number of, and pollutants analyzed by, each such laboratory or firm below)* X NO *(go to Section IX)*

A. NAME	B. ADDRESS	C. TELEPHONE (area code & no.)	D. POLLUTANTS ANALYZED (list)

IX. CERTIFICATION

I certify under penalty of law that this document and all attachments were prepared under my direction or supervision in accordance with a system designed to assure that qualified personnel properly gather and evaluate the information submitted. Based on my inquiry of the person or persons who manage the system or those persons directly responsible for gathering the information, the information submitted is, to the best of my knowledge and belief, true, accurate, and complete. I am aware that there are significant penalties for submitting false information, including the possibility of fine and imprisonment for knowing violations.

A. NAME & OFFICIAL TITLE (type or print)	B. PHONE NO. (area code & no.)
JERRY L. BELLOWS, DOE AREA MANAGER	505-667-5105
ALLEN J. TIEDMAN, ASSOC. DIRECTOR FOR OPERATIONS	505-667-9390
C. SIGNATURE	D. DATE SIGNED

PLEASE PRINT OR TYPE IN THE UNSHADED AREAS ONLY. You may report some or all of this information on separate sheets *(use the same format)* instead of completing these pages. SEE INSTRUCTIONS

EPA I.D. NUMBER *(copy from Item 1 of Form 1)*: NM0890010515

Form Approved
OMB No. 2040 0086
Approval expires 7-31-88

V. INTAKE AND EFFLUENT CHARACTERISTICS *(continued from page 3 of Form 2 C)*

OUTFALL NO 03A028

PART A - You must provide the results of at least one analysis for every pollutant in this table. Complete one table for each outfall. See instructions for additional details.

1. POLLUTANT	2. EFFLUENT a. MAXIMUM DAILY VALUE (1) CONCENTRATION	(2) MASS	b. MAXIMUM 30 DAY VALUE (if available) (1) CONCENTRATION	(2) MASS	c. LONG TERM AVRG. VALUE (if available) (1) CONCENTRATION	(2) MASS	d. NO. OF ANALYSES	3. UNITS (specify if blank) a. CONCENTRATION	b. MASS	4. INTAKE (optional) a. LONG TERM AVERAGE VALUE (1) CONCENTRATION	(2) MASS	b. NO. OF ANALYSES
a. Biochemical Oxygen Demand *(BOD)*	2.0	22.7						mg/l	g/d			
b. Chemical Oxygen Demand *(COD)*	42.0	476.9						mg/l	g/d			
c. Total Organic Carbon *(TOC)*	7.4	84.0						mg/l	g/d			
d. Total Suspended Solids *(TSS)*	10.0	113.5						mg/l	g/d			
e. Ammonia *(as N)*	< 0.01	< 113.6						mg/l	mg/d			
f. Flow	VALUE 3000		VALUE		VALUE			gal/day		VALUE		
g. Temperature *(winter)*	VALUE 36.9		VALUE		VALUE			°C		VALUE		
h. Temperature *(summer)*	VALUE		VALUE		VALUE			°C		VALUE		
i. pH	MINIMUM 6.8	MAXIMUM 8.8	MINIMUM 6.0	MAXIMUM 9.0				STANDARD UNITS				

PART B - Mark "X" in column 2-a for each pollutant you know or have reason to believe is present. Mark "X" in column 2-b for each pollutant you believe to be absent. If you mark column 2a for any pollutant which is limited either directly, or indirectly but expressly, in an effluent limitations guideline, you must provide the results of at least one analysis for that pollutant. For other pollutants for which you mark column 2a, you must provide quantitative data or an explanation of their presence in your discharge. Complete one table for each outfall. See the instructions for additional details and requirements.

1. POLLUTANT AND CAS NO. *(if available)*	2. MARK 'X' a. BELIEVED PRESENT	b. BELIEVED ABSENT	3. EFFLUENT a. MAXIMUM DAILY VALUE (1) CONCENTRATION	(2) MASS	b. MAXIMUM 30 DAY VALUE (if available) (1) CONCENTRATION	(2) MASS	c. LONG TERM AVRG. VALUE (if available) (1) CONCENTRATION	(2) MASS	d. NO. OF ANALYSES	4. UNITS a. CONCENTRATION	b. MASS	5. INTAKE (optional) a. LONG TERM AVERAGE VALUE (1) CONCENTRATION	(2) MASS	b. NO. OF ANALYSES
a. Bromide (24959-67-9)	X		3.24	36.8						mg/l	g/d			
b. Chlorine, Total Residual		X	0.0							mg/l	mg/d			
c. Color	X		10							units				
d. Fecal Coliform		X												
e. Fluoride (16984-48-8)	X		2.97	33.7						mg/l	g/d			
f. Nitrate-Nitrite *(as N)*	X		1.13	12.8						mg/l	g/d			

CONTINUE ON REVERSE

ITEM V-B CONTINUED FROM FRONT

1. POLLUTANT AND CAS NO. (if available)	2. MARK 'X' a. BELIEVED PRESENT	b. BELIEVED ABSENT	3. EFFLUENT a. MAXIMUM DAILY VALUE (1) CONCENTRATION	(2) MASS	b. MAXIMUM 30 DAY VALUE (if available) (1) CONCENTRATION	(2) MASS	c. LONG TERM AVRG. VALUE (if available) (1) CONCENTRATION	(2) MASS	d. NO. OF ANALYSES	4. UNITS a. CONCENTRATION	b. MASS	5. INTAKE (optional) a. LONG TERM AVERAGE VALUE (1) CONCENTRATION	(2) MASS	b. NO. OF ANALYSES
g. Nitrogen, Total Organic (as N)	X		2.3	26.1						mg/l	g/d			
h. Oil and Grease		X	< 1.2	< 13.6						mg/l	g/d			
i. Phosphorus (as P), Total (7723-14-0)	X		0.67	7.6						mg/l	g/d			
j. Radioactivity														
(1) Alpha, Total	X		14	26.1						pCi/l	nCi/d			
(2) Beta, Total	X		6.6	74.9						pCi/l	nCi/d			
(3) Radium, Total	X													
(4) Radium 226, Total	X		0.07	794.9						pCi/l	pCi/d			
k. Sulfate (as SO_4) (14808-79-8)	X		143	1.6						mg/l	kg/d			
l. Sulfide (as S)	X		0.16	1.8						mg/l	g/d			
m. Sulfite (as SO_3) (14265-45-3)	X		18.8	213.5						mg/l	g/d			
n. Surfactants	X		0.11	1.2						mg/l	g/d			
o. Aluminum, Total (7429-90-5)	X		0.06	681.3						mg/l	mg/d			
p. Barium, Total (7440-39-3)	X		0.11	1.2						mg/l	g/d			
q. Boron, Total (7440-42-8)	X		0.33	3.7						mg/l	g/d			
r. Cobalt, Total (7440-48-4)		X	< 0.1	< 1.1						mg/l	g/d			
s. Iron, Total (7439-89-6)	X		1.1	12.5						mg/l	g/d			
t. Magnesium, Total (7439-95-4)	X		5.8	65.9						mg/l	g/d			
u. Molybdenum, Total (7439-98-7)	X		1.7	19.3						mg/l	g/d			
v. Manganese, Total (7439-96-5)	X		0.05	567.8						mg/l	mg/d			
w. Tin, Total (7440-31-5)		X	< .050	< 567.8						mg/l	mg/d			
x. Titanium, Total (7440-32-6)		X	< .004	< 45.4						mg/l	mg/d			

CONTINUE ON PAGE V-3

EPA I.D. NUMBER (copy from Item 1 of Form 1)	OUTFALL NUMBER
NM0890010515	03A028

Form Approved
OMB No 2040-0086
Approval expires 7-31-88

CONTINUED FROM PAGE 3 OF FORM 2-C

PART C - If you are a primary industry and this outfall contains process wastewater, refer to Table 2c-2 in the instructions to determine which of the GC/MS fractions you must test for. Mark "X" in column 2-a for all such GC/MS fractions that apply to your industry and for ALL toxic metals, cyanides, and total phenols If you are not required to mark column 2-a *(secondary industries, nonprocess wastewater outfalls, and nonrequired GC/MS fractions)*, mark "X" in column 2-b for each pollutant you know or have reason to believe is present. Mark "X" in column 2-c for each pollutant you believe is absent. If you mark column 2a for any pollutant, you must provide the results of at least one analysis for that pollutant. If you mark column 2b for any pollutant, you must provide the results of at least one analysis for that pollutant if you know or have reason to believe it will be discharged in concentrations of 10 ppb or greater. If you mark column 2b for acrolein, acrylonitrile, 2,4 dinitrophenol, or 2-methyl-4, 6 dinitrophenol, you must provide the results of at least one analysis for each of these pollutants which you know or have reason to believe that you discharge in concentrations of 100 ppb or greater. Otherwise, for pollutants for which you mark column 2b, you must either submit at least one analysis or briefly describe the reasons the pollutant is expected to be discharged. Note that there are 7 pages to this part; please review each carefully. Complete one table *(all 7 pages)* for each outfall. See instructions for additional details and requirements.

1. POLLUTANT AND CAS NUMBER (if available)	2. MARK 'X'			3. EFFLUENT							4. UNITS		5. INTAKE (optional)		
	a. TESTING REQUIRED	b. BELIEVED PRESENT	c. BELIEVED ABSENT	a. MAXIMUM DAILY VALUE (1) CONCENTRATION	a. MAXIMUM DAILY VALUE (2) MASS	b. MAXIMUM 30 DAY VALUE (if available) (1) CONCENTRATION	b. MAXIMUM 30 DAY VALUE (if available) (2) MASS	c. LONG TERM AVRG. VALUE (if available) (1) CONCENTRATION	c. LONG TERM AVRG. VALUE (if available) (2) MASS	d. NO. OF ANALYSES	a. CONCENTRATION	b. MASS	a. LONG TERM AVERAGE VALUE (1) CONCENTRATION	a. LONG TERM AVERAGE VALUE (2) MASS	b. NO. OF ANALYSES
METALS, CYANIDE, AND TOTAL PHENOLS															
1M. Antimony, Total (7440-36-0)			X	< .050	< 567.8						mg/l	mg/d			
2M. Arsenic, Total (7440-38-2)		X		0.04	454.2						mg/l	mg/d			
3M. Beryllium, Total, 7440-41-7)			X	< 0.1	< 1.1						mg/l	g/d			
4M. Cadmium, Total (7440-43-9)		X		.004	45.4						mg/l	mg/d			
5M. Chromium, Total (7440 47-3)		X		.260	3.0						mg/l	g/d			
6M. Copper, Total (7440-50-8)		X		0.1	1.1						mg/l	g/d			
7M. Lead, Total (7439 92-1)		X		.050	567.8						mg/l	mg/d			
8M. Mercury, Total (7439 97-6)			X	< .0002	< 2.3						mg/l	mg/d			
9M. Nickel, Total (7440-02-0)		X		0.28	3.2						mg/l	g/d			
10M. Selenium, Total (7782-49-2)			X	< .001	< 11.4						mg/l	mg/d			
11M. Silver, Total (7440-22-4)			X	< 0.01	113.6						mg/l	mg/d			
12M. Thallium, Total (7440 28-0)		X		0.51	5.8						mg/l	g/d			
13M. Zinc, Total (7440 66-6)		X		.071	806.2						mg/l	mg/d			
14M. Cyanide, Total (57-12-5)		X		.013	147.6						mg/l	mg/d			
15M. Phenols, Total		X		.017	193.0						mg/l	mg/d			
DIOXIN															
2,3,7,8 Tetra chlorodibenzo-P Dioxin (1764 01-6)			X	DESCRIBE RESULTS											

CONTINUE ON REVERSE

1. POLLUTANT AND CAS NUMBER (if available)	2. MARK 'X' a. TESTING REQUIRED	b. BELIEVED PRESENT	c. BELIEVED ABSENT	3. EFFLUENT a. MAXIMUM DAILY VALUE (1) CONCENTRATION	(2) MASS	b. MAXIMUM 30 DAY VALUE (if available) (1) CONCENTRATION	(2) MASS	c. LONG TERM AVRG. VALUE (if available) (1) CONCENTRATION	(2) MASS	d. NO. OF ANALYSES	4. UNITS a. CONCENTRATION	b. MASS	5. INTAKE (optional) a. LONG TERM AVERAGE VALUE (1) CONCENTRATION	(2) MASS	b. NO. OF ANALYSES
GC/MS FRACTION – VOLATILE COMPOUNDS															
1V. Acrolein (107-02-8)			X												
2V. Acrylonitrile (107-13-1)			X												
3V. Benzene (71-43-2)			X	< .005	< 56.8						mg/l	mg/d			
4V. Bis (Chloromethyl) Ether (542-88-1)			X												
5V. Bromoform (75-25-2)		X		.006	68.1						mg/l	mg/d			
6V. Carbon Tetrachloride (56-23-5)			X	< .005	< 56.8						mg/l	mg/d			
7V. Chlorobenzene (108-90-7)			X	< .005	< 56.8						mg/l	mg/d			
8V. Chlorodibromomethane (124-48-1)			X	< .005	< 56.8						mg/l	mg/d			
9V. Chloroethane (75-00-3)			X	< .010	< 113.6						mg/l	mg/d			
10V. 2-Chloroethylvinyl Ether (110-75-8)			X												
11V. Chloroform (67-66-3)			X	< .005	< 56.8						mg/l	mg/d			
12V. Dichlorobromomethane (75-27-4)			X	< .005	< 56.8						mg/l	mg/d			
13V. Dichlorodifluoromethane (75-71-8)			X												
14V. 1,1-Dichloroethane (75-34-3)			X	< .005	< 56.8						mg/l	mg/d			
15V. 1,2-Dichloroethane (107-06-2)			X	< .005	< 56.8						mg/l	mg/d			
16V. 1,1-Dichloroethylene (75-35-4)			X	< .005	< 56.8						mg/l	mg/d			
17V. 1,2-Dichloropropane (78-87-5)			X	< .005	< 56.8						mg/l	mg/d			
18V. 1,3-Dichloropropylene (542-75-6)			X	< .005	< 56.8						mg/l	mg/d			
19V. Ethylbenzene (100-41-4)			X	< .005	< 56.8						mg/l	mg/d			
20V. Methyl Bromide (74-83-9)			X	< .010	< 113.6						mg/l	mg/d			
21V. Methyl Chloride (74-87-3)			X	< .010	< 113.6						mg/l	mg/d			

CONTINUE ON PAGE V-5

CONTINUED FROM PAGE V-4

EPA I.D. NUMBER (copy from Item 1 of Form 1): NM0890010515

OUTFALL NUMBER: 03A028

Form Approved
OMB No. 2040-0086
Approval expires 7-31-88

1. POLLUTANT AND CAS NUMBER (if available)	2. MARK "X" a. TESTING REQUIRED	b. BELIEVED PRESENT	c. BELIEVED ABSENT	3. EFFLUENT a. MAXIMUM DAILY VALUE (1) CONCENTRATION	(2) MASS	b. MAXIMUM 30 DAY VALUE (if available) (1) CONCENTRATION	(2) MASS	c. LONG TERM AVRG. VALUE (if available) (1) CONCENTRATION	(2) MASS	d. NO. OF ANALYSES	4. UNITS a. CONCENTRATION	b. MASS	5. INTAKE (optional) a. LONG TERM AVERAGE VALUE (1) CONCENTRATION	(2) MASS	b. NO. OF ANALYSES
GC/MS FRACTION – VOLATILE COMPOUNDS *(continued)*															
22V. Methylene Chloride (75-09-2)			X	< .005	< 56.8						mg/l	mg/d			
23V. 1,1,2,2-Tetrachloroethane (79-34-5)			X	< .005	< 56.8						mg/l	mg/d			
24V. Tetrachloroethylene (127-18-4)			X	< .005	< 56.8						mg/l	mg/d			
25V. Toluene (108-88-3)			X	< .005	< 56.8						mg/l	mg/d			
26V. 1,2-Trans-Dichloroethylene (156-60-5)			X	< .005	< 56.8						mg/l	mg/d			
27V. 1,1,1-Trichloroethane (71-55-6)			X	< .005	< 56.8						mg/l	mg/d			
28V. 1,1,2-Trichloroethane (79-00-5)			X	< .005	< 56.8						mg/l	mg/d			
29V. Trichloroethylene (79-01-6)			X	< .005	< 56.8						mg/l	mg/d			
30V. Trichlorofluoromethane (75-69-4)			X	< .005	< 56.8						mg/l	mg/d			
31V. Vinyl Chloride (75-01-4)			X	< .010	< 113.6						mg/l	mg/d			
GC/MS FRACTION – ACID COMPOUNDS															
1A. 2-Chlorophenol (95-57-8)			X	< .010	< 113.6						mg/l	mg/d			
2A. 2,4-Dichlorophenol (120-83-2)			X	< .010	< 113.6						mg/l	mg/d			
3A. 2,4-Dimethylphenol (105-67-9)			X	< .010	< 113.6						mg/l	mg/d			
4A. 4,6-Dinitro-O-Cresol (534-52-1)			X	< .010	< 113.6						mg/l	mg/d			
5A. 2,4-Dinitrophenol (51-28-5)			X	< .010	< 113.6						mg/l	mg/d			
6A. 2-Nitrophenol (88-75-5)			X	< .010	< 113.6						mg/l	mg/d			
7A. 4-Nitrophenol (100-02-7)			X	< .010	< 113.6						mg/l	mg/d			
8A. P-Chloro-M-Cresol (59-50-7)			X	< .010	< 113.6						mg/l	mg/d			
9A. Pentachlorophenol (87-86-5)			X	< .010	< 113.6						mg/l	mg/d			
10A. Phenol (108-95-2)			X	< .010	< 113.6						mg/l	mg/d			
11A. 2,4,6-Trichlorophenol (88-06-2)			X	< .010	< 113.6						mg/l	mg/d			

CONTINUED FROM THE FRONT

1. POLLUTANT AND CAS NUMBER (if available)	2. MARK 'X' a. TESTING REQUIRED	b. BELIEVED PRESENT	c. BELIEVED ABSENT	3. EFFLUENT a. MAXIMUM DAILY VALUE (1) CONCENTRATION	(2) MASS	b. MAXIMUM 30 DAY VALUE (if available) (1) CONCENTRATION	(2) MASS	c. LONG TERM AVRG. VALUE (if available) (1) CONCENTRATION	(2) MASS	d. NO. OF ANALYSES	4. UNITS a. CONCENTRATION	b. MASS	5. INTAKE (optional) a. LONG TERM AVERAGE VALUE (1) CONCENTRATION	(2) MASS	b. NO. OF ANALYSES
GC/MS FRACTION – BASE/NEUTRAL COMPOUNDS															
1B. Acenaphthene (83-32-9)			X	< .010	< 113.6						mg/l	mg/d			
2B. Acenaphtylene (208-96-8)			X	< .010	< 113.6						mg/l	mg/d			
3B. Anthracene (120-12-7)			X	< .010	< 113.6						mg/l	mg/d			
4B. Benzidine (92-87-5)			X	< .010	< 113.6						mg/l	mg/d			
5B. Benzo *(a)* Anthracene (56-55-3)			X	< .010	< 113.6						mg/l	mg/d			
6B. Benzo *(a)* Pyrene (50-32-8)			X	< .010	< 113.6						mg/l	mg/d			
7B. 3,4-Benzo-fluoranthene (205-99-2)			X	< .010	< 113.6						mg/l	mg/d			
8B. Benzo *(ghi)* Perylene (191-24-2)			X	< .010	< 113.6						mg/l	mg/d			
9B. Benzo *(k)* Fluoranthene (207-08-9)			X	< .010	< 113.6						mg/l	mg/d			
10B. Bis *(2-Chloro-ethoxy)* Methane (111-91-1)			X	< .010	< 113.6						mg/l	mg/d			
11B. Bis *(2-Chloro-ethyl)* Ether (111-44-4)			X	< .010	< 113.6						mg/l	mg/d			
12B. Bis *(2-Chloroiso-propyl)* Ether (102-60-1)			X	< .010	< 113.6						mg/l	mg/d			
13B. Bis *(2-Ethyl-hexyl)* Phthalate (117-81-7)			X	< .010	< 113.6						mg/l	mg/d			
14B. 4-Bromo-phenyl Phenyl Ether (101-55-3)			X	< .010	< 113.6						mg/l	mg/d			
15B. Butyl Benzyl Phthalate (85-68-7)			X	< .010	< 113.6						mg/l	mg/d			
16B. 2-Chloro-naphthalene (91-58-7)			X	< .010	< 113.6						mg/l	mg/d			
17B. 4-Chloro-phenyl Phenyl Ether (7005-72-3)			X	< .010	< 113.6						mg/l	mg/d			
18B. Chrysene (218-01-9)			X	< .010	< 113.6						mg/l	mg/d			
19B. Dibenzo *(a,h)* Anthracene (53-70-3)			X	< .010	< 113.6						mg/l	mg/d			
20B. 1,2-Dichloro-benzene (95-50-1)			X	< .010	< 113.6						mg/l	mg/d			
21B. 1,3-Dichloro-benzene (541-73-1)			X	< .010	< 113.6						mg/l	mg/d			

CONTINUE ON PAGE V-7

EPA I.D. NUMBER (copy from Item 1 of Form 1): NM0890010515
OUTFALL NUMBER: 03A028

Form 2c
OMB No. 2040 0086
Approval expires 7 31 88

1. POLLUTANT AND CAS NUMBER (if available)	2. MARK 'X' a. TESTING REQUIRED	b. BELIEVED PRESENT	c. BELIEVED ABSENT	3. EFFLUENT a. MAXIMUM DAILY VALUE (1) CONCENTRATION	(2) MASS	b. MAXIMUM 30 DAY VALUE (if available) (1) CONCENTRATION	(2) MASS	c. LONG TERM AVRG. VALUE (if available) (1) CONCENTRATION	(2) MASS	d. NO. OF ANALYSES	4. UNITS a. CONCENTRATION	b. MASS	5. INTAKE (optional) a. LONG TERM AVERAGE VALUE (1) CONCENTRATION	(2) MASS	b. NO. OF ANALYSES
GC/MS FRACTION – BASE/NEUTRAL COMPOUNDS *(continued)*															
22B. 1,4-Dichlorobenzene (106-46-7)			X	< .010	< 113.6						mg/l	mg/d			
23B. 3,3'-Dichlorobenzidine (91-94-1)			X	< .010	< 113.6						mg/l	mg/d			
24B. Diethyl Phthalate (84-66-2)			X	< .010	< 113.6						mg/l	mg/d			
25B. Dimethyl Phthalate (131-11-3)			X	< .010	< 113.6						mg/l	mg/d			
26B. Di-N-Butyl Phthalate (84-74-2)			X	< .010	< 113.6						mg/l	mg/d			
27B. 2,4-Dinitrotoluene (121-14-2)			X	< .010	< 113.6						mg/l	mg/d			
28B. 2,6-Dinitrotoluene (606-20-2)			X	< .010	< 113.6						mg/l	mg/d			
29B. Di-N-Octyl Phthalate (117-84-0)			X	< .010	< 113.6						mg/l	mg/d			
30B. 1,2-Diphenylhydrazine *(as Azobenzene)* (122-66-7)			X	< .010	< 113.6						mg/l	mg/d			
31B. Fluoranthene (206-44-0)			X	< .010	< 113.6						mg/l	mg/d			
32B. Fluorene (86-73-7)			X	< .010	< 113.6						mg/l	mg/d			
33B. Hexachlorobenzene (118-74-1)			X	< .010	< 113.6						mg/l	mg/d			
34B. Hexachlorobutadiene (87-68-3)			X	< .010	< 113.6						mg/l	mg/d			
35B. Hexachlorocyclopentadiene (77-47-4)			X	< .010	< 113.6						mg/l	mg/d			
36B. Hexachloroethane (67-72-1)			X	< .010	< 113.6						mg/l	mg/d			
37B. Indeno *(1,2,3-cd)* Pyrene (193-39-5)			X	< .010	< 113.6						mg/l	mg/d			
38B. Isophorone (78-59-1)			X	< .010	< 113.6						mg/l	mg/d			
39B. Naphthalene (91-20-3)			X	< .010	< 113.6						mg/l	mg/d			
40B. Nitrobenzene (98-95-3)			X	< .010	< 113.6						mg/l	mg/d			
41B. N-Nitrosodimethylamine (62-75-9)			X	< .010	< 113.6						mg/l	mg/d			
42B. N-Nitrosodi-N-Propylamine (621-64-7)			X	< .010	< 113.6						mg/l	mg/d			

CONTINUED FROM THE FRONT

1. POLLUTANT AND CAS NUMBER (if available)	2. MARK 'X' a. TEST INCLUDED	b. REQUIRED BELIEVED PRESENT	c. BELIEVED ABSENT	3. EFFLUENT a. MAXIMUM DAILY VALUE (1) CONCENTRATION	(2) MASS	b. MAXIMUM 30 DAY VALUE (if available) (1) CONCENTRATION	(2) MASS	c. LONG TERM AVRG. VALUE (if available) (1) CONCENTRATION	(2) MASS	d. NO. OF ANALYSES	4. UNITS a. CONCENTRATION	b. MASS	5. INTAKE (optional) a. LONG TERM AVERAGE VALUE (1) CONCENTRATION	(2) MASS	b. NO. OF ANALYSES
GC/MS FRACTION – BASE/NEUTRAL COMPOUNDS *(continued)*															
43B. N-Nitrosodiphenylamine (86-30-6)			X	< .010	< 113.6						mg/l	mg/d			
44B. Phenanthrene (85-01-8)			X	< .010	< 113.6						mg/l	mg/d			
45B. Pyrene (129-00-0)			X	< .010	< 113.6						mg/l	mg/d			
46B. 1,2,4 - Trichlorobenzene (120-82-1)			X	< .010	< 113.6						mg/l	mg/d			
GC/MS FRACTION – PESTICIDES															
1P. Aldrin (309-00-2)			X	< .06	< 681.3						ug/l	ug/d			
2P. α-BHC (319-84-6)			X	< .02	< 227.1						ug/l	ug/d			
3P. β-BHC (319-85-7)			X	< .1	< 1.1						ug/l	mg/d			
4P. γ-BHC (58-89-9)			X	< .03	< 340.7						ug/l	ug/d			
5P. δ-BHC (319-86-8)			X	< .12	< 1.4						ug/l	mg/d			
6P. Chlordane (57-74-9)			X	< .25	< 2.8						ug/l	mg/d			
7P. 4,4'-DDT (50-29-3)			X	< .06	< 681.3						ug/l	ug/d			
8P. 4,4'-DDE (72-55-9)			X	< .08	< 908.4						ug/l	ug/d			
9P. 4,4'-DDD (72-54-8)			X	< .08	< 908.4						ug/l	ug/d			
10P. Dieldrin (60-57-1)			X	< .08	< 908.4						ug/l	ug/d			
11P. α-Endosulfan (115-29-7)			X	< .05	< 567.8						ug/l	ug/d			
12P. β-Endosulfan (115-29-7)			X	< .08	< 908.4						ug/l	ug/d			
13P. Endosulfan Sulfate (1031-07-8)			X	< .09	< 1.0						ug/l	mg/d			
14P. Endrin (72-20-8)			X	< .06	< 681.3						ug/l	ug/d			
15P. Endrin Aldehyde (7421-93-4)			X	< .62	< 7.0						ug/l	mg/d			
16P. Heptachlor (76-44-8)			X	< .03	< 340.7						ug/l	ug/d			

CONTINUE ON PAGE V-9

CONTINUED FROM PAGE V-8

EPA I.D. NUMBER (Copy from Item 1 of Form 1) NM0890010515

OUTFALL NUMBER 03A028

Form Approved
OMB No. 2040-0086
Approval Expires 3-31-88

1. POLLUTANT AND CAS NUMBER (if available)	2. MARK 'X' a. TESTED BUT NOT FOUND LD.	b. BELIEVED PRESENT	c. BELIEVED ABSENT	3. EFFLUENT a. MAXIMUM DAILY VALUE (1) CONCENTRATION	(2) MASS	b. MAXIMUM 30 DAY VALUE (1) CONCENTRATION	(2) MASS	c. LONG TERM AVRG. VALUE (1) CONCENTRATION	(2) MASS	d. NO. OF ANALYSES	4. UNITS a. CONCENTRATION	b. MASS	5. INTAKE (optional) a. LONG TERM AVRG. VALUE (1) CONCENTRATION	(2) MASS	b. NO. OF ANALYSES
GC/MS FRACTION – PESTICIDES *(continued)*															
17P. Heptachlor Epoxide (1024-57-3)			X	< .08	< 908.4						ug/l	ug/d			
18P. PCB-1242 (53469-21-9)			X	< .71	< 8.1						ug/l	mg/d			
19P. PCB-1254 (11097-69-1)			X	< .71	< 8.1						ug/l	mg/d			
20P. PCB-1221 (11104-28-2)			X	ND											
21P. PCB-1232 (11141-16-5)			X	ND											
22P. PCB-1248 (12672-29-6)			X	ND											
23P. PCB-1260 (11096-82-5)			X	< .71	< 8.1						ug/l	mg/d			
24P. PCB-1016 (12674-11-2)			X	ND											
25P. Toxaphene (8001-35-2)			X	< 2.5	< 28.4						ug/l	mg/d			

SCHEMATIC OF WATER FLOW
OUTFALL 03A028

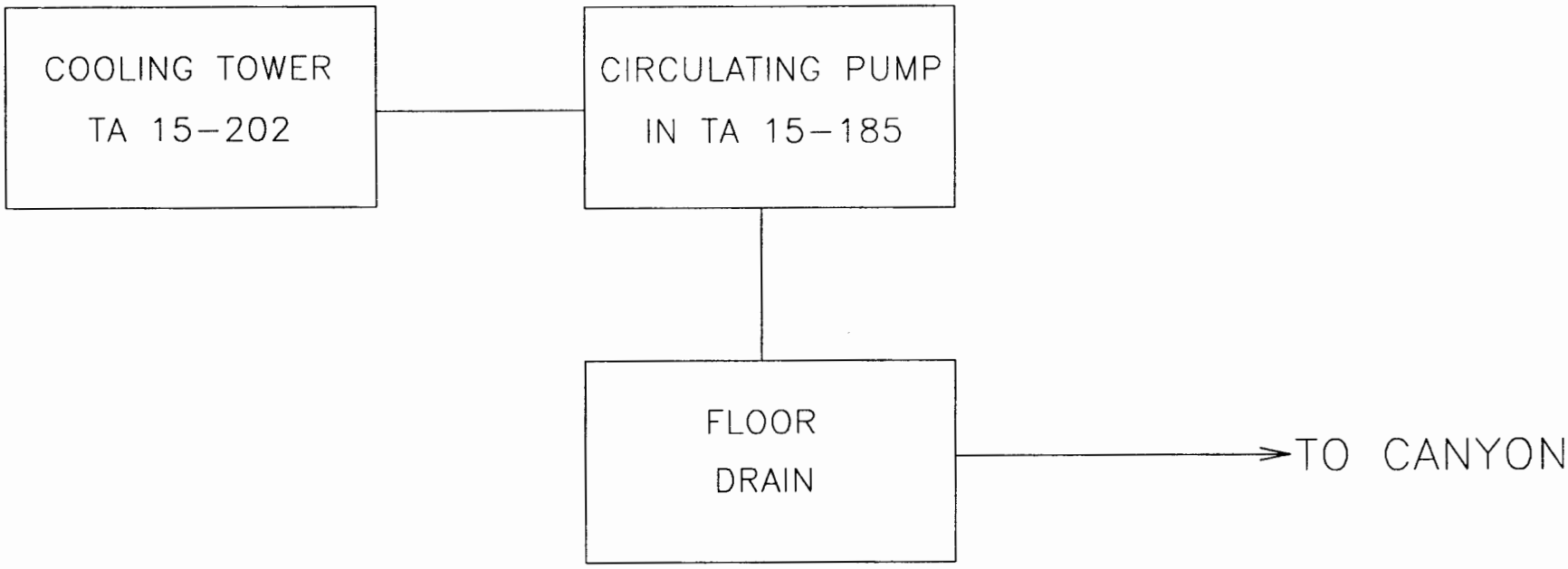

Please print or type in the unshaded areas only

EPA I.D. NUMBER: NM0890010515

FORM 2C NPDES

EPA

U.S. ENVIRONMENTAL PROTECTION AGENCY
APPLICATION FOR PERMIT TO DISCHARGE WASTEWATER
EXISTING MANUFACTURING, COMMERCIAL, MINING AND SILVICULTURAL OPERATIONS
Consolidated Permits Program

I. OUTFALL LOCATION

For each outfall, list the latitude and longitude of its location to the nearest 15 seconds and the name of the receiving water.

A. OUTFALL NUMBER (list)	B. LATITUDE 1. DEG.	2. MIN.	3. SEC.	C. LONGITUDE 1. DEG.	2. MIN.	3. SEC.	D. RECEIVING WATER (name)
04A093	35	50	40	106	18	32	VALLE CANYON
04A139	35	49	57	106	17	45	WATER CANYON
04A143	35	50	33	106	17	41	PAJARITO CANYON

II. FLOWS, SOURCES OF POLLUTION, AND TREATMENT TECHNOLOGIES

A. Attach a line drawing showing the water flow through the facility. Indicate sources of intake water, operations contributing wastewater to the effluent, and treatment units labeled to correspond to the more detailed descriptions in Item B. Construct a water balance on the line drawing by showing average flows between intakes, operations, treatment units, and outfalls. If a water balance cannot be determined (*e.g., for certain mining activities*), provide a pictorial description of the nature and amount of any sources of water and any collection or treatment measures.

B. For each outfall, provide a description of: (1) All operations contributing wastewater to the effluent, including process wastewater, sanitary wastewater, cooling water, and storm water runoff; (2) The average flow contributed by each operation; and (3) The treatment received by the wastewater. Continue on additional sheets if necessary.

1. OUTFALL NO. (list)	2. OPERATIONS CONTRIBUTING FLOW: a. OPERATION (list)	b. AVERAGE FLOW (include units)	3. TREATMENT: a. DESCRIPTION	b. LIST CODES FROM TABLE 2C-1	
093	TA 15-203 EQUIPMENT COOLING	2.5 GPM	NONE		
139	TA 15-184 EQUIPMENT COOLING	1.7 GPM	NONE		
143	TA 15-306 EQUIPMENT COOLING	50 GPD	NONE		

OFFICIAL USE ONLY (effluent guidelines sub-categories)

CONTINUED FROM THE FRONT

C. Except for storm runoff, leaks, or spills, are any of the discharges described in Items II-A or B intermittent or seasonal?

X YES *(complete the following table)* ☐ NO *(go to Section III)*

1. OUTFALL NUMBER *(list)*	2. OPERATION(s) CONTRIBUTING FLOW *(list)*	3. FREQUENCY a. DAYS PER WEEK *(specify average)*	3. FREQUENCY b. MONTHS PER YEAR *(specify average)*	4. FLOW a. FLOW RATE *(in mgd)* 1. LONG TERM AVERAGE	4. FLOW a. FLOW RATE *(in mgd)* 2. MAXIMUM DAILY	4. FLOW b. TOTAL VOLUME *(specify with units)* 1. LONG TERM AVERAGE	4. FLOW b. TOTAL VOLUME *(specify with units)* 2. MAXIMUM DAILY	4. FLOW c. DURATION *(in days)*
139	NONCONTACT COOLING	2	12	2.4 X	8.4 X	2400	8400	6
	WATER			10-4	10-3	GPD	GPD	H/D
143	NONCONTACT COOLING	1	12	5 X	3.5 X	50	350	1
	WATER			10-5	10-4	GPD	GPD	H/D

III. PRODUCTION

A. Does an effluent guideline limitation promulgated by EPA under Section 304 of the Clean Water Act apply to your facility?

☐ YES *(complete Item III-B)* X NO *(go to Section IV)*

B. Are the limitations in the applicable effluent guideline expressed in terms of production *(or other measure of operation)*?

☐ YES *(complete Item III-C)* X NO *(go to Section IV)*

C. If you answered "yes" to Item III-B, list the quantity which represents an actual measurement of your level of production, expressed in the terms and units used in the applicable effluent guideline, and indicate the affected outfalls.

1. AVERAGE DAILY PRODUCTION a. QUANTITY PER DAY	b. UNITS OF MEASURE	c. OPERATION, PRODUCT, MATERIAL, ETC. *(specify)*	2. AFFECTED OUTFALLS *(list outfall numbers)*
NA			

IV. IMPROVEMENTS

A. Are you now required by any Federal, State or local authority to meet any implementation schedule for the construction, upgrading or operation of wastewater treatment equipment or practices or any other environmental programs which may affect the discharges described in this application? This includes, but is not limited to, permit conditions, administrative or enforcement orders, enforcement compliance schedule letters, stipulations, court orders, and grant or loan conditions.

☐ YES *(complete the following table)* X NO *(go to Item IV-B)*

1. IDENTIFICATION OF CONDITION, AGREEMENT, ETC.	2. AFFECTED OUTFALLS a. NO.	2. AFFECTED OUTFALLS b. SOURCE OF DISCHARGE	3. BRIEF DESCRIPTION OF PROJECT	4. FINAL COMPLIANCE DATE a. REQUIRED	4. FINAL COMPLIANCE DATE b. PROJECTED

B. OPTIONAL. You may attach additional sheets describing any additional water pollution control programs *(or other environmental projects which may affect your discharges)* you now have underway or which you plan. Indicate whether each program is now underway or planned, and indicate your actual or planned schedules for construction. ☐ MARK "X" IF DESCRIPTION OF ADDITIONAL CONTROL PROGRAMS IS ATTACHED

 CONTINUE ON PAGE 3

EPA I.D. NUMBER (copy from Item 1 of Form 1)
NM0890010515

Form Approved
OMB No. 2040-0086
Approval expires 7-31-88

V. INTAKE AND EFFLUENT CHARACTERISTICS

A, B, & C. See instructions before proceeding — Complete one set of tables for each outfall — Annotate the outfall number in the space provided. NOTE: Tables V-A, V-B, and V-C are included on separate sheets numbered V-1 through V-9.

D. Use the space below to list any of the pollutants listed in Table 2c-3 of the instructions, which you know or have reason to believe is discharged or may be discharged from any outfall. For every pollutant you list, briefly describe the reasons you believe it to be present and report any analytical data in your possession.

1. POLLUTANT	2. SOURCE	1. POLLUTANT	2. SOURCE
NA			

VI. POTENTIAL DISCHARGES NOT COVERED BY ANALYSIS

Is any pollutant listed in Item V-C a substance or a component of a substance which you currently use or manufacture as an intermediate or final product or byproduct?

☐ YES (list all such pollutants below) ☒ NO (go to Item VI-B)

CONTINUED FROM THE FRONT

VII. BIOLOGICAL TOXICITY TESTING DATA

Do you have any knowledge or reason to believe that any biological test for acute or chronic toxicity has been made on any of your discharges or on a receiving water in relation to your discharge within the last 3 years?

___ YES *(identify the tests and describe their purposes below)* X NO *(go to Section VIII)*

VIII. CONTRACT ANALYSIS INFORMATION

Were any of the analyses reported in Item V performed by a contract laboratory or consulting firm?

___ YES *(list the name, address, and telephone number of, and pollutants analyzed by, each such laboratory or firm below)* X NO *(go to Section IX)*

A. NAME	B. ADDRESS	C. TELEPHONE (area code & no.)	D. POLLUTANTS ANALYZED (list)

IX. CERTIFICATION

I certify under penalty of law that this document and all attachments were prepared under my direction or supervision in accordance with a system designed to assure that qualified personnel properly gather and evaluate the information submitted. Based on my inquiry of the person or persons who manage the system or those persons directly responsible for gathering the information, the information submitted is, to the best of my knowledge and belief, true, accurate, and complete. I am aware that there are significant penalties for submitting false information, including the possibility of fine and imprisonment for knowing violations.

A. NAME & OFFICIAL TITLE (type or print)	B. PHONE NO. (area code & no.)
JERRY L. BELLOWS, DOE AREA MANAGER	505-667-5105
ALLEN J. TIEDMAN, ASSOC. DIRECTOR FOR OPERATIONS	505-667-9390
C. SIGNATURE	D. DATE SIGNED

PLEASE PRINT OR TYPE IN THE UNSHADED AREAS ONLY. You may report some or all of this information on separate sheets *(use the same format)* instead of completing these pages. SEE INSTRUCTIONS

EPA I.D. NUMBER *(copy from Item 1 of Form 1)*: NM0890010515

Form Approved. OMB No. 2040-0086 Approval expires 7-31-88

V. INTAKE AND EFFLUENT CHARACTERISTICS *(continued from page 3 of Form 2-C)* [redacted] OUTFALL NO. 04A096

PART A - You must provide the results of at least one analysis for every pollutant in this table. Complete one table for each outfall. See instructions for additional details.

1. POLLUTANT	2. EFFLUENT a. MAXIMUM DAILY VALUE (1) CONCENTRATION	a. MAXIMUM DAILY VALUE (2) MASS	b. MAXIMUM 30 DAY VALUE (if available) (1) CONCENTRATION	b. MAXIMUM 30 DAY VALUE (2) MASS	c. LONG TERM AVRG. VALUE (if available) (1) CONCENTRATION	c. LONG TERM AVRG. VALUE (2) MASS	d. NO. OF ANALYSES	3. UNITS (specify if blank) a. CONCENTRATION	3. UNITS b. MASS	4. INTAKE (optional) a. LONG TERM AVERAGE VALUE (1) CONCENTRATION	4. INTAKE a. LONG TERM AVERAGE VALUE (2) MASS	4. INTAKE b. NO. OF ANALYSES
a. Biochemical Oxygen Demand *(BOD)*	< 2.0	< 21.8						mg/l	g/d			
b. Chemical Oxygen Demand *(COD)*	< 10.0	< 109.0						mg/l	g/d			
c. Total Organic Carbon *(TOC)*	.59	6.4						mg/l	g/d			
d. Total Suspended Solids *(TSS)*	18.0	196.2						mg/l	g/d			
e. Ammonia *(as N)*	< 0.1	1.1						mg/l	g/d			
f. Flow	VALUE 2880		VALUE		VALUE			gal/day	of non-contact cooling water	VALUE		
g. Temperature *(winter)*	VALUE 13.9		VALUE		VALUE			°C		VALUE		
h. Temperature *(summer)*	VALUE NA		VALUE		VALUE			°C		VALUE		
i. pH	MINIMUM 8.45	MAXIMUM 8.80	MINIMUM 8.3	MAXIMUM 8.9				STANDARD UNITS				

PART B - Mark "X" in column 2-a for each pollutant you know or have reason to believe is present. Mark "X" in column 2-b for each pollutant you believe to be absent. If you mark column 2a for any pollutant which is limited either directly, or indirectly but expressly, in an effluent limitations guideline, you must provide the results of at least one analysis for that pollutant. For other pollutants for which you mark column 2a, you must provide quantitative data or an explanation of their presence in your discharge. Complete one table for each outfall. See the instructions for additional details and requirements.

1. POLLUTANT AND CAS NO. *(if available)*	2. MARK 'X' a. BELIEVED PRESENT	2. MARK 'X' b. BELIEVED ABSENT	3. EFFLUENT a. MAXIMUM DAILY VALUE (1) CONCENTRATION	a. MAXIMUM DAILY VALUE (2) MASS	b. MAXIMUM 30 DAY VALUE (if available) (1) CONCENTRATION	b. MAXIMUM 30 DAY VALUE (2) MASS	c. LONG TERM AVRG. VALUE (if available) (1) CONCENTRATION	c. LONG TERM AVRG. VALUE (2) MASS	d. NO. OF ANALYSES	4. UNITS a. CONCENTRATION	4. UNITS b. MASS	5. INTAKE (optional) a. LONG TERM AVERAGE VALUE (1) CONCENTRATION	5. INTAKE a. LONG TERM AVERAGE VALUE (2) MASS	5. INTAKE b. NO. OF ANALYSES
a. Bromide (24959-67-9)		X	< 0.5	< 5.5						mg/l	g/d			
b. Chlorine, Total Residual	X		0.05	545.0						mg/l	mg/d			
c. Color	X		7.0							units				
d. Fecal Coliform		X												
e. Fluoride (16984-48-8)	X		.21	2.3						mg/l	g/d			
f. Nitrate-Nitrite *(as N)*	X		.304	3.3						mg/l	g/d			

ITEM V-B CONTINUED FROM FRONT

1. POLLUTANT AND CAS NO. (if available)	2. MARK 'X' a. BELIEVED PRESENT	2. MARK 'X' b. BELIEVED ABSENT	3. EFFLUENT a. MAXIMUM DAILY VALUE (1) CONCENTRATION	a. MAXIMUM DAILY VALUE (2) MASS	b. MAXIMUM 30 DAY VALUE (if available) (1) CONCENTRATION	b. MAXIMUM 30 DAY VALUE (2) MASS	c. LONG TERM AVRG. VALUE (if available) (1) CONCENTRATION	c. LONG TERM AVRG. VALUE (2) MASS	d. NO. OF ANALYSES	4. UNITS a. CONCENTRATION	4. UNITS b. MASS	5. INTAKE (optional) a. LONG TERM AVERAGE VALUE (1) CONCENTRATION	a. LONG TERM AVERAGE VALUE (2) MASS	b. NO. OF ANALYSES
g. Nitrogen, Total Organic (as N)		X	< 0.5	< 5.5						mg/l	g/d			
h. Oil and Grease		X	< 1.05	< 11.4						mg/l	g/d			
i. Phosphorus (as P), Total (7723-14-0)	X		.05	545.0						mg/l	mg/d			
j. Radioactivity														
(1) Alpha, Total	X		0.1	1.1						pCi/l	nCi/l			
(2) Beta, Total	X		6.6	71.9						pCi/l	nCi/l			
(3) Radium, Total	X													
(4) Radium 226, Total	X		.06	654.0						pCi/l	pCi/l			
k. Sulfate (as SO_4) (14808-79-8)	X		3.16	34.4						mg/l	g/d			
l. Sulfide (as S)		X												
m. Sulfite (as SO_3) (14265-45-3)		X	< .05	< 545.0						mg/l	mg/d			
n. Surfactants		X	< .1	< 1.1						mg/l	g/d			
o. Aluminum, Total (7429-90-5)		X	< 0.04	< 436.0						mg/l	mg/d			
p. Barium, Total (7440-39-3)	X		0.03	327.0						mg/l	mg/d			
q. Boron, Total (7440-42-8)	X		0.02	218.0						mg/l	mg/d			
r. Cobalt, Total (7440-48-4)		X	< .1	< 1.1						mg/l	g/d			
s. Iron, Total (7439-89-6)	X		0.41	4.5						mg/l	g/d			
t. Magnesium, Total (7439-95-4)	X		2.5	27.3						mg/l	g/d			
u. Molybdenum, Total (7439-98-7)		X	< .02	< 218.0						mg/l	mg/d			
v. Manganese, Total (7439-96-5)	X		.01	109.0						mg/l	mg/d			
w. Tin, Total (7440-31-5)		X	< .050	< 545.0						mg/l	mg/d			
x. Titanium, Total (7440-32-6)		X	< .004	< 43.6						mg/l	mg/d			

CONTINUE ON PAGE V-3

EPA I.D. NUMBER (copy from Item 1 of Form 1)	OUTFALL NUMBER
NM0890010515	04A093

Form Approved
OMB No 2040-0086
Approval expires 7-31-88

CONTINUED FROM PAGE 3 OF FORM 2-C

PART C - If you are a primary industry and this outfall contains process wastewater, refer to Table 2c-2 in the instructions to determine which of the GC/MS fractions you must test for. Mark "X" in column 2-a for all such GC/MS fractions that apply to your industry and for ALL toxic metals, cyanides, and total phenols. If you are not required to mark column 2-a *(secondary industries, nonprocess wastewater outfalls, and nonrequired GC/MS fractions)*, mark "X" in column 2-b for each pollutant you know or have reason to believe is present. Mark "X" in column 2-c for each pollutant you believe is absent. If you mark column 2a for any pollutant, you must provide the results of at least one analysis for that pollutant. If you mark column 2b for any pollutant, you must provide the results of at least one analysis for that pollutant if you know or have reason to believe it will be discharged in concentrations of 10 ppb or greater. If you mark column 2b for acrolein, acrylonitrile, 2,4 dinitrophenol, or 2-methyl-4, 6 dinitrophenol, you must provide the results of at least one analysis for each of these pollutants which you know or have reason to believe that you discharge in concentrations of 100 ppb or greater. Otherwise, for pollutants for which you mark column 2b, you must either submit at least one analysis or briefly describe the reasons the pollutant is expected to be discharged. Note that there are 7 pages to this part; please review each carefully. Complete one table *(all 7 pages)* for each outfall. See instructions for additional details and requirements.

1. POLLUTANT AND CAS NUMBER (if available)	2. MARK 'X'			3. EFFLUENT							4. UNITS		5. INTAKE (optional)		
	a. TESTING REQUIRED	b. BELIEVED PRESENT	c. BELIEVED ABSENT	a. MAXIMUM DAILY VALUE (1) CONCENTRATION	a. MAXIMUM DAILY VALUE (2) MASS	b. MAXIMUM 30 DAY VALUE (if available) (1) CONCENTRATION	b. MAXIMUM 30 DAY VALUE (if available) (2) MASS	c. LONG TERM AVRG. VALUE (if available) (1) CONCENTRATION	c. LONG TERM AVRG. VALUE (if available) (2) MASS	d. NO. OF ANALYSES	a. CONCENTRATION	b. MASS	a. LONG TERM AVERAGE VALUE (1) CONCENTRATION	a. LONG TERM AVERAGE VALUE (2) MASS	b. NO. OF ANALYSES
METALS, CYANIDE, AND TOTAL PHENOLS															
1M. Antimony, Total (7440-36-0)			X	< .050	< 545.0						mg/l	mg/d			
2M. Arsenic, Total (7440-38-2)		X		.002	21.8						mg/l	mg/d			
3M. Beryllium, Total, 7440-41-7)			X	< .001	< 10.9						mg/l	mg/d			
4M. Cadmium, Total (7440-43-9)			X	< .010	< 109.0						mg/l	mg/d			
5M. Chromium, Total (7440-47-3)		X		.040	436.0						mg/l	mg/d			
6M. Copper, Total (7440-50-8)		X		.031	337.9						mg/l	mg/d			
7M. Lead, Total (7439-92-1)			X	< .050	< 545.0						mg/l	mg/d			
8M. Mercury, Total (7439-97-6)			X	< .0002	< 2.2						mg/l	mg/d			
9M. Nickel, Total (7440-02-0)		X		0.06	654.0						mg/l	mg/d			
10M. Selenium, Total (7782-49-2)			X	< .001	< 10.9						mg/l	mg/d			
11M. Silver, Total (7440-22-4)			X	< .010	< 109.0						mg/l	mg/d			
12M. Thallium, Total (7440-28-0)			X	< 0.4	< 4.4						mg/l	g/d			
13M. Zinc, Total (7440-66-6)		X		.043	468.7						mg/l	mg/d			
14M. Cyanide, Total (57-12-5)			X	< .01	< 109.0						mg/l	mg/d			
15M. Phenols, Total			X	< .01	< 109.0						mg/l	mg/d			
DIOXIN															
2,3,7,8 Tetra chlorodibenzo P Dioxin (1764-01-6)			X	DESCRIBE RESULTS											

1. POLLUTANT AND CAS NUMBER (if available)	2. MARK 'X' a. TEST INC. IN GRAB	b. TEST INC. IN COMP.	c. BELIEVED ABSENT	3. EFFLUENT a. MAXIMUM DAILY VALUE (1) CONCENTRATION	(2) MASS	b. MAXIMUM 30 DAY VALUE (if available) (1) CONCENTRATION	(2) MASS	c. LONG TERM AVRG. VALUE (if available) (1) CONCENTRATION	(2) MASS	d. NO. OF ANALYSES	4. UNITS a. CONCENTRATION	b. MASS	5. INTAKE (optional) a. LONG TERM AVERAGE VALUE (1) CONCENTRATION	(2) MASS	b. NO. OF ANALYSES
GC/MS FRACTION – VOLATILE COMPOUNDS															
1V. Acrolein (107-02-8)			X												
2V. Acrylonitrile (107-13-1)			X												
3V. Benzene (71-43-2)			X	< .005	< 54.5						mg/l	mg/d			
4V. Bis (Chloromethyl) Ether (542-88-1)			X												
5V. Bromoform (75-25-2)			X	< .005	< 54.5						mg/l	mg/d			
6V. Carbon Tetrachloride (56-23-5)			X	< .005	< 54.5						mg/l	mg/d			
7V. Chlorobenzene (108-90-7)			X	< .005	< 54.5						mg/l	mg/d			
8V. Chlorodibromomethane (124-48-1)			X	< .005	< 54.5						mg/l	mg/d			
9V. Chloroethane (75-00-3)			X	< .010	< 109.0						mg/l	mg/d			
10V. 2-Chloroethylvinyl Ether (110-75-8)			X												
11V. Chloroform (67-66-3)			X	< .005	< 54.5						mg/l	mg/d			
12V. Dichlorobromomethane (75-27-4)			X	< .005	< 54.5						mg/l	mg/d			
13V. Dichlorodifluoromethane (75-71-8)			X												
14V. 1,1-Dichloroethane (75-34-3)			X	< .005	< 54.5						mg/l	mg/d			
15V. 1,2-Dichloroethane (107-06-2)			X	< .005	< 54.5						mg/l	mg/d			
16V. 1,1-Dichloroethylene (75-35-4)			X	< .005	< 54.5						mg/l	mg/d			
17V. 1,2-Dichloropropane (78-87-5)			X	< .005	< 54.5						mg/l	mg/d			
18V. 1,3-Dichloropropylene (542-75-6)			X												
19V. Ethylbenzene (100-41-4)			X	< .005	< 54.5						mg/l	mg/d			
20V. Methyl Bromide (74-83-9)			X	< .010	< 109.0						mg/l	mg/d			
21V. Methyl Chloride (74-87-3)			X	< .010	< 109.0						mg/l	mg/d			

CONTINUE ON PAGE V-5

EPA I.D. NUMBER (copy from Item 1 of Form 1): NM0890010515
OUTFALL NUMBER: 04A093

Form Approved
OMB No. 2040-0086
Approval expires 7-31-88

1. POLLUTANT AND CAS NUMBER (if available)	2. MARK 'X' a. TESTING REQUIRED	b. BELIEVED PRESENT	c. BELIEVED ABSENT	3. EFFLUENT a. MAXIMUM DAILY VALUE (1) CONCENTRATION	(2) MASS	b. MAXIMUM 30 DAY VALUE (if available) (1) CONCENTRATION	(2) MASS	c. LONG TERM AVRG. VALUE (if available) (1) CONCENTRATION	(2) MASS	d. NO. OF ANALYSES	4. UNITS a. CONCENTRATION	b. MASS	5. INTAKE (optional) a. LONG TERM AVERAGE VALUE (1) CONCENTRATION	(2) MASS	b. NO. OF ANALYSES
GC/MS FRACTION – VOLATILE COMPOUNDS *(continued)*															
22V. Methylene Chloride (75-09-2)			X	< .005	< 54.5						mg/l	mg/d			
23V. 1,1,2,2-Tetrachloroethane (79-34-5)			X	< .005	< 54.5						mg/l	mg/d			
24V. Tetrachloroethylene (127-18-4)			X	< .005	< 54.5						mg/l	mg/d			
25V. Toluene (108-88-3)			X	< .005	< 54.5						mg/l	mg/d			
26V. 1,2-Trans-Dichloroethylene (156-60-5)			X	< .005	< 54.5						mg/l	mg/d			
27V. 1,1,1-Trichloroethane (71-55-6)			X	< .005	< 54.5						mg/l	mg/d			
28V. 1,1,2-Trichloroethane (79-00-5)			X	< .005	< 54.5						mg/l	mg/d			
29V. Trichloroethylene (79-01-6)			X	< .005	< 54.5						mg/l	mg/d			
30V. Trichlorofluoromethane (75-69-4)			X	< .005	< 54.5						mg/l	mg/d			
31V. Vinyl Chloride (75-01-4)			X	< .010	< 109.0						mg/l	mg/d			
GC/MS FRACTION – ACID COMPOUNDS															
1A. 2-Chlorophenol (95-57-8)			X	< .010	< 109.0						mg/l	mg/d			
2A. 2,4-Dichlorophenol (120-83-2)			X	< .010	< 109.0						mg/l	mg/d			
3A. 2,4-Dimethylphenol (105-67-9)			X	< .010	< 109.0						mg/l	mg/d			
4A. 4,6-Dinitro-O-Cresol (534-52-1)			X	< .010	< 109.0						mg/l	mg/d			
5A. 2,4-Dinitrophenol (51-28-5)			X	< .010	< 109.0						mg/l	mg/d			
6A. 2-Nitrophenol (88-75-5)			X	< .010	< 109.0						mg/l	mg/d			
7A. 4-Nitrophenol (100-02-7)			X	< .010	< 109.0						mg/l	mg/d			
8A. P-Chloro-M-Cresol (59-50-7)			X	< .010	< 109.0						mg/l	mg/d			
9A. Pentachlorophenol (87-86-5)			X	< .010	< 109.0						mg/l	mg/d			
10A. Phenol (108-95-2)			X	< .010	< 109.0						mg/l	mg/d			
11A. 2,4,6-Trichlorophenol (88-06-2)			X	< .010	< 109.0						mg/l	mg/d			

CONTINUED FROM THE FRONT

1. POLLUTANT AND CAS NUMBER (if available)	2. MARK 'X' a. TEST INCLUDED	b. BELIEVED PRESENT	c. BELIEVED ABSENT	3. EFFLUENT a. MAXIMUM DAILY VALUE (1) CONCENTRATION	(2) MASS	b. MAXIMUM 30 DAY VALUE (if available) (1) CONCENTRATION	(2) MASS	c. LONG TERM AVRG. VALUE (if available) (1) CONCENTRATION	(2) MASS	d. NO. OF ANALYSES	4. UNITS a. CONCENTRATION	b. MASS	5. INTAKE (optional) a. LONG TERM AVERAGE VALUE (1) CONCENTRATION	(2) MASS	b. NO. OF ANALYSES
GC/MS FRACTION – BASE/NEUTRAL COMPOUNDS															
1B. Acenaphthene (83-32-9)			X	< .010	< 109.0						mg/l	mg/d			
2B. Acenaphtylene (208-96-8)			X	< .010	< 109.0						mg/l	mg/d			
3B. Anthracene (120-12-7)			X	< .010	< 109.0						mg/l	mg/d			
4B. Benzidine (92-87-5)			X	< .010	< 109.0						mg/l	mg/d			
5B. Benzo *(a)* Anthracene (56-55-3)			X	< .010	< 109.0						mg/l	mg/d			
6B. Benzo *(a)* Pyrene (50-32-8)			X	< .010	< 109.0						mg/l	mg/d			
7B. 3,4-Benzo-fluoranthene (205-99-2)			X	< .010	< 109.0						mg/l	mg/d			
8B. Benzo *(ghi)* Perylene (191-24-2)			X	< .010	< 109.0						mg/l	mg/d			
9B. Benzo *(k)* Fluoranthene (207-08-9)			X	< .010	< 109.0						mg/l	mg/d			
10B. Bis *(2-Chloro-ethoxy)* Methane (111-91-1)			X	< .010	< 109.0						mg/l	mg/d			
11B. Bis *(2-Chloro-ethyl)* Ether (111-44-4)			X	< .010	< 109.0						mg/l	mg/d			
12B. Bis *(2-Chloroiso-propyl)* Ether (102-60-1)			X	< .010	< 109.0						mg/l	mg/d			
13B. Bis *(2-Ethyl-hexyl)* Phthalate (117-81-7)			X	< .010	< 109.0						mg/l	mg/d			
14B. 4-Bromo-phenyl Phenyl Ether (101-55-3)			X	< .010	< 109.0						mg/l	mg/d			
15B. Butyl Benzyl Phthalate (85-68-7)			X	< .010	< 109.0						mg/l	mg/d			
16B. 2-Chloro-naphthalene (91-58-7)			X	< .010	< 109.0						mg/l	mg/d			
17B. 4-Chloro-phenyl Phenyl Ether (7005-72-3)			X	< .010	< 109.0						mg/l	mg/d			
18B. Chrysene (218-01-9)			X	< .010	< 109.0						mg/l	mg/d			
19B. Dibenzo *(a,h)* Anthracene (53-70-3)			X	< .010	< 109.0						mg/l	mg/d			
20B. 1,2-Dichloro-benzene (95-50-1)			X	< .010	< 109.0						mg/l	mg/d			
21B. 1,3-Dichloro-benzene (541-73-1)			X	< .010	< 109.0						mg/l	mg/d			

CONTINUE ON PAGE V-7

CONTINUED FROM PAGE V-6

EPA I.D. NUMBER (copy from Item 1 of Form 1): NM0890010515

OUTFALL NUMBER: 04A093

OMB No. 2040-0086
Approval expires 7-31-88

1. POLLUTANT AND CAS NUMBER (if available)	2. MARK 'X' a. TESTING REQUIRED	b. BELIEVED PRESENT	c. BELIEVED ABSENT	3. EFFLUENT a. MAXIMUM DAILY VALUE (1) CONCENTRATION	(2) MASS	b. MAXIMUM 30 DAY VALUE (if available) (1) CONCENTRATION	(2) MASS	c. LONG TERM AVRG. VALUE (if available) (1) CONCENTRATION	(2) MASS	d. NO. OF ANALYSES	4. UNITS a. CONCENTRATION	b. MASS	5. INTAKE (optional) a. LONG TERM AVERAGE VALUE (1) CONCENTRATION	(2) MASS	b. NO. OF ANALYSES
GC/MS FRACTION – BASE/NEUTRAL COMPOUNDS *(continued)*															
22B. 1,4-Dichlorobenzene (106-46-7)			X	< .010	< 109.0						mg/l	mg/d			
23B. 3,3'-Dichlorobenzidine (91-94-1)			X	< .010	< 109.0						mg/l	mg/d			
24B. Diethyl Phthalate (84-66-2)			X	< .010	< 109.0						mg/l	mg/d			
25B. Dimethyl Phthalate (131-11-3)			X	< .010	< 109.0						mg/l	mg/d			
26B. Di-N-Butyl Phthalate (84-74-2)			X	< .010	< 109.0						mg/l	mg/d			
27B. 2,4-Dinitrotoluene (121-14-2)			X	< .010	< 109.0						mg/l	mg/d			
28B. 2,6-Dinitrotoluene (606-20-2)			X	< .010	< 109.0						mg/l	mg/d			
29B. Di-N-Octyl Phthalate (117-84-0)			X	< .010	< 109.0						mg/l	mg/d			
30B. 1,2-Diphenylhydrazine *(as Azobenzene)* (122-66-7)			X	< .010	< 109.0						mg/l	mg/d			
31B. Fluoranthene (206-44-0)			X	< .010	< 109.0						mg/l	mg/d			
32B. Fluorene (86-73-7)			X	< .010	< 109.0						mg/l	mg/d			
33B. Hexachlorobenzene (118-74-1)			X	< .010	< 109.0						mg/l	mg/d			
34B. Hexachlorobutadiene (87-68-3)			X	< .010	< 109.0						mg/l	mg/d			
35B. Hexachlorocyclopentadiene (77-47-4)			X	< .010	< 109.0						mg/l	mg/d			
36B. Hexachloroethane (67-72-1)			X	< .010	< 109.0						mg/l	mg/d			
37B. Indeno *(1,2,3-cd)* Pyrene (193-39-5)			X	< .010	< 109.0						mg/l	mg/d			
38B. Isophorone (78-59-1)			X	< .010	< 109.0						mg/l	mg/d			
39B. Naphthalene (91-20-3)			X	< .010	< 109.0						mg/l	mg/d			
40B. Nitrobenzene (98-95-3)			X	< .010	< 109.0						mg/l	mg/d			
41B. N-Nitrosodimethylamine (62-75-9)			X	< .010	< 109.0						mg/l	mg/d			
42B. N-Nitrosodi-N-Propylamine (621-64-7)			X	< .010	< 109.0						mg/l	mg/d			

CONTINUED FROM THE FRONT

1. POLLUTANT AND CAS NUMBER (if available)	2. MARK 'X' a. TESTING REQUIRED	b. BELIEVED PRESENT	c. BELIEVED ABSENT	3. EFFLUENT a. MAXIMUM DAILY VALUE (1) CONCENTRATION	(2) MASS	b. MAXIMUM 30 DAY VALUE (if available) (1) CONCENTRATION	(2) MASS	c. LONG TERM AVRG. VALUE (if available) (1) CONCENTRATION	(2) MASS	d. NO. OF ANALYSES	4. UNITS a. CONCENTRATION	b. MASS	5. INTAKE (optional) a. LONG TERM AVERAGE VALUE (1) CONCENTRATION	(2) MASS	b. NO. OF ANALYSES
GC/MS FRACTION – BASE/NEUTRAL COMPOUNDS *(continued)*															
43B. N-Nitrosodiphenylamine (86-30-6)			X	< .010	< 109.0						mg/l	mg/d			
44B. Phenanthrene (85-01-8)			X	< .010	< 109.0						mg/l	mg/d			
45B. Pyrene (129-00-0)			X	< .010	< 109.0						mg/l	mg/d			
46B. 1,2,4 - Trichlorobenzene (120-82-1)			X	< .010	< 109.0						mg/l	mg/d			
GC/MS FRACTION – PESTICIDES															
1P. Aldrin (309-00-2)			X	< .06	< 654.0						ug/l	ug/d			
2P. α-BHC (319-84-6)			X	< .02	< 218.0						ug/l	ug/d			
3P. β-BHC (319-85-7)			X	< .1	< 1.1						ug/l	mg/d			
4P. γ-BHC (58-89-9)			X	< .03	< 327.0						ug/l	ug/d			
5P. δ-BHC (319-86-8)			X	< .12	< 1.3						ug/l	mg/d			
6P. Chlordane (57-74-9)			X	< .25	< 2.7						ug/l	mg/d			
7P. 4,4'-DDT (50-29-3)			X	< .06	< 654.0						ug/l	ug/d			
8P. 4,4'-DDE (72-55-9)			X	< .08	< 872.1						ug/l	ug/d			
9P. 4,4'-DDD (72-54-8)			X	< .08	< 872.1						ug/l	ug/d			
10P. Dieldrin (60-57-1)			X	< .08	< 872.1						ug/l	ug/d			
11P. α-Endosulfan (115-29-7)			X	< .05	< 545.0						ug/l	ug/d			
12P. β-Endosulfan (115-29-7)			X	< .08	< 872.1						ug/l	ug/d			
13P. Endosulfan Sulfate (1031-07-8)			X	< .09	< 981.1						ug/l	ug/d			
14P. Endrin (72-20-8)			X	< .06	< 654.0						ug/l	ug/d			
15P. Endrin Aldehyde (7421-93-4)			X	< .62	< 6.8						ug/l	mg/d			
16P. Heptachlor (76-44-8)			X	< .03	< 327.0						ug/l	ug/d			

CONTINUE ON PAGE V-9

CONTINUED FROM PAGE V-8

EPA I.D. NUMBER (from Item 1 of Form 1)	OUTFALL NUMBER
NM0890010515	04A093

Form Approved
OMB No. 2040-0086
Approval expires 7-31-88

1. POLLUTANT AND CAS NUMBER (if available)	2. MARK 'X' a. BELIEVED PRESENT	b. BELIEVED ABSENT	c. BELIEVED ABSENT	3. EFFLUENT a. MAXIMUM DAILY VALUE (1) CONCENTRATION	(2) MASS	b. MAXIMUM 30 DAY VALUE (1) CONCENTRATION	(2) MASS	c. LONG TERM AVRG. VALUE (1) CONCENTRATION	(2) MASS	d. NO. OF ANAL.	4. UNITS a. CONCENTRATION	b. MASS	5. INTAKE (optional) a. LONG TERM AVRG. VALUE (1) CONCENTRATION	(2) MASS	b. NO. OF ANAL.
GC/MS FRACTION – PESTICIDES *(continued)*															
17P. Heptachlor Epoxide (1024-57-3)			X	< .04	< 436.0						ug/l	ug/d			
18P. PCB-1242 (53469-21-9)			X	< .68	< 7.4						ug/l	mg/d			
19P. PCB-1254 (11097-69-1)			X	< .68	< 7.4						ug/l	mg/d			
20P. PCB-1221 (11104-28-2)			X												
21P. PCB-1232 (11141-16-5)			X												
22P. PCB-1248 (12672-29-6)			X												
23P. PCB-1260 (11096-82-5)			X	< .68	< 7.4						ug/l	mg/d			
24P. PCB-1016 (12674-11-2)			X												
25P. Toxaphene (8001-35-2)			X	< 2.5	< 27.3						ug/l	mg/d			

SCHEMATIC OF WATER FLOW
OUTFALL 04A093

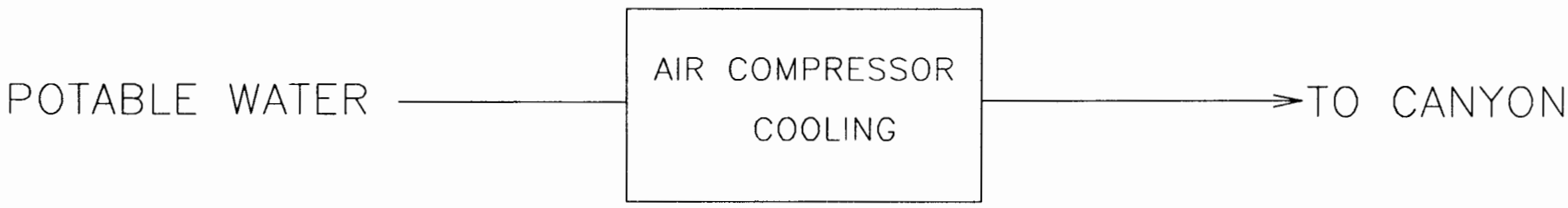

PLEASE PRINT OR TYPE IN THE UNSHADED AREAS ONLY. You may report some or all of this information on separate sheets *(use the same format)* instead of completing these pages. SEE INSTRUCTIONS

EPA I.D. NUMBER *(copy from Item 1 of Form 1)*

NM0890010515

Form Approved
OMB No. 2040-0086
Approval expires 7-31-88

V. INTAKE AND EFFLUENT CHARACTERISTICS *(continued from page 3 of Form 2-C)*

OUTFALL NO. 04A139

PART A - You must provide the results of at least one analysis for every pollutant in this table. Complete one table for each outfall. See instructions for additional details.

1. POLLUTANT	2. EFFLUENT a. MAXIMUM DAILY VALUE (1) CONCENTRATION	a. MAXIMUM DAILY VALUE (2) MASS	b. MAXIMUM 30 DAY VALUE (if available) (1) CONCENTRATION	b. MAXIMUM 30 DAY VALUE (2) MASS	c. LONG TERM AVRG. VALUE (if available) (1) CONCENTRATION	c. LONG TERM AVRG. VALUE (2) MASS	d. NO. OF ANALYSES	3. UNITS (specify if blank) a. CONCENTRATION	b. MASS	4. INTAKE (optional) a. LONG TERM AVERAGE VALUE (1) CONCENTRATION	a. LONG TERM AVERAGE VALUE (2) MASS	b. NO. OF ANALYSES
a. Biochemical Oxygen Demand *(BOD)*	< 2.0	< 18.2						mg/l	g/d			
b. Chemical Oxygen Demand *(COD)*	< 10.0	< 90.8						mg/l	g/d			
c. Total Organic Carbon *(TOC)*	.59	5.4						mg/l	g/d			
d. Total Suspended Solids *(TSS)*	18.0	163.5						mg/l	g/d			
e. Ammonia *(as N)*	< 0.1	0.9						mg/l	g/d			
f. Flow	VALUE 2400		VALUE		VALUE			gal/day	of non-contact cooling	VALUE		water
g. Temperature *(winter)*	VALUE 13.9		VALUE		VALUE			°C		VALUE		
h. Temperature *(summer)*	VALUE NA		VALUE		VALUE			°C		VALUE		
i. pH	MINIMUM 8.45	MAXIMUM 8.80	MINIMUM 8.3	MAXIMUM 8.9				STANDARD UNITS				

PART B - Mark "X" in column 2-a for each pollutant you know or have reason to believe is present. Mark "X" in column 2-b for each pollutant you believe to be absent. If you mark column 2a for any pollutant which is limited either directly, or indirectly but expressly, in an effluent limitations guideline, you must provide the results of at least one analysis for that pollutant. For other pollutants for which you mark column 2a, you must provide quantitative data or an explanation of their presence in your discharge. Complete one table for each outfall. See the instructions for additional details and requirements.

1. POLLUTANT AND CAS NO. *(if available)*	2. MARK 'X' a. BELIEVED PRESENT	b. BELIEVED ABSENT	3. EFFLUENT a. MAXIMUM DAILY VALUE (1) CONCENTRATION	a. MAXIMUM DAILY VALUE (2) MASS	b. MAXIMUM 30 DAY VALUE (if available) (1) CONCENTRATION	b. MAXIMUM 30 DAY VALUE (2) MASS	c. LONG TERM AVRG. VALUE (if available) (1) CONCENTRATION	c. LONG TERM AVRG. VALUE (2) MASS	d. NO. OF ANALYSES	4. UNITS a. CONCENTRATION	b. MASS	5. INTAKE (optional) a. LONG TERM AVERAGE VALUE (1) CONCENTRATION	a. LONG TERM AVERAGE VALUE (2) MASS	b. NO. OF ANALYSES
a. Bromide (24959-67-9)		X	< 0.5	< 4.5						mg/l	g/d			
b. Chlorine, Total Residual	X		0.05	454.2						mg/l	mg/d			
c. Color	X		7.0							units				
d. Fecal Coliform		X												
e. Fluoride (16984-48-8)	X		.21	1.9						mg/l	g/d			
f. Nitrate-Nitrite *(as N)*	X		.304	2.8						mg/l	g/d			

CONTINUE ON REVERSE

ITEM V-B CONTINUED FROM FRONT

1. POLLUTANT AND CAS NO. (if available)	2. MARK 'X' a. PRESENT	b. ABSENT	3. EFFLUENT a. MAXIMUM DAILY VALUE (1) CONCENTRATION	(2) MASS	b. MAXIMUM 30 DAY VALUE (if available) (1) CONCENTRATION	(2) MASS	c. LONG TERM AVRG. VALUE (if available) (1) CONCENTRATION	(2) MASS	d. NO. OF ANALYSES	4. UNITS a. CONCENTRATION	b. MASS	5. INTAKE (optional) a. LONG TERM AVERAGE VALUE (1) CONCENTRATION	(2) MASS	b. NO. OF ANALYSES
g. Nitrogen, Total Organic (as N)		X	< 0.5	< 4.5						mg/l	g/d			
h. Oil and Grease		X	< 1.05	< 9.5						mg/l	g/d			
i. Phosphorus (as P), Total (7723-14-0)	X		.05	454.2						mg/l	mg/d			
j. Radioactivity														
(1) Alpha, Total	X		0.1	908.4						pCi/l	pCi/l			
(2) Beta, Total	X		6.6	60.0						pCi/l	nCi/l			
(3) Radium, Total	X													
(4) Radium 226, Total	X		.06	545.0						pCi/l	pCi/l			
k. Sulfate (as SO_4) (14808-79-8)	X		3.16	28.7						mg/l	g/d			
l. Sulfide (as S)		X												
m. Sulfite (as SO_3) (14265-45-3)		X	< .05	< 454.2						mg/l	mg/d			
n. Surfactants		X	< .1	< 908.4						mg/l	mg/d			
o. Aluminum, Total (7429-90-5)		X	< 0.04	< 363.4						mg/l	mg/d			
p. Barium, Total (7440-39-3)	X		0.03	272.5						mg/l	mg/d			
q. Boron, Total (7440-42-8)	X		0.02	181.7						mg/l	mg/d			
r. Cobalt, Total (7440-48-4)		X	< .1	< 908.4						mg/l	mg/d			
s. Iron, Total (7439-89-6)	X		0.41	3.7						mg/l	g/d			
t. Magnesium, Total (7439-95-4)	X		2.5	22.7						mg/l	g/d			
u. Molybdenum, Total (7439-98-7)		X	< .02	< 181.7						mg/l	mg/d			
v. Manganese, Total (7439-96-5)	X		.01	90.8						mg/l	mg/d			
w. Tin, Total (7440-31-5)		X	< .050	< 454.2						mg/l	mg/d			
x. Titanium, Total (7440-32-6)		X	< .004	< 36.3						mg/l	mg/d			

CONTINUE ON PAGE V-3

EPA I.D. NUMBER (copy from Item 1 of Form 1)	OUTFALL NUMBER
NM0890010515	04A139

Form Approved.
OMB No 2040-0086
Approval expires 7 31 88

CONTINUED FROM PAGE 3 OF FORM 2-C

PART C - If you are a primary industry and this outfall contains process wastewater, refer to Table 2c-2 in the instructions to determine which of the GC/MS fractions you must test for. Mark "X" in column 2-a for all such GC/MS fractions that apply to your industry and for ALL toxic metals, cyanides, and total phenols. If you are not required to mark column 2-a *(secondary industries, nonprocess wastewater outfalls, and nonrequired GC/MS fractions)*, mark "X" in column 2-b for each pollutant you know or have reason to believe is present. Mark "X" in column 2-c for each pollutant you believe is absent. If you mark column 2a for any pollutant, you must provide the results of at least one analysis for that pollutant. If you mark column 2b for any pollutant, you must provide the results of at least one analysis for that pollutant if you know or have reason to believe it will be discharged in concentrations of 10 ppb or greater. If you mark column 2b for acrolein, acrylonitrile, 2,4 dinitrophenol, or 2-methyl-4, 6 dinitrophenol, you must provide the results of at least one analysis for each of these pollutants which you know or have reason to believe that you discharge in concentrations of 100 ppb or greater. Otherwise, for pollutants for which you mark column 2b, you must either submit at least one analysis or briefly describe the reasons the pollutant is expected to be discharged. Note that there are 7 pages to this part; please review each carefully. Complete one table *(all 7 pages)* for each outfall. See instructions for additional details and requirements.

1. POLLUTANT AND CAS NUMBER (if available)	2. MARK 'X'			3. EFFLUENT							4. UNITS		5. INTAKE (optional)		
	a. TESTING REQUIRED	b. BELIEVED PRESENT	c. BELIEVED ABSENT	a. MAXIMUM DAILY VALUE (1) CONCENTRATION	a. MAXIMUM DAILY VALUE (2) MASS	b. MAXIMUM 30 DAY VALUE (if available) (1) CONCENTRATION	b. MAXIMUM 30 DAY VALUE (if available) (2) MASS	c. LONG TERM AVRG. VALUE (if available) (1) CONCENTRATION	c. LONG TERM AVRG. VALUE (if available) (2) MASS	d. NO. OF ANALYSES	a. CONCENTRATION	b. MASS	a. LONG TERM AVERAGE VALUE (1) CONCENTRATION	a. LONG TERM AVERAGE VALUE (2) MASS	b. NO. OF ANALYSES
METALS, CYANIDE, AND TOTAL PHENOLS															
1M. Antimony, Total (7440-36-0)			X	< .050	< 454.2						mg/l	mg/d			
2M. Arsenic, Total (7440-38-2)		X		.002	18.2						mg/l	mg/d			
3M. Beryllium, Total, 7440-41-7)			X	< .001	< 9.1						mg/l	mg/d			
4M. Cadmium, Total (7440-43-9)			X	< .010	< 90.8						mg/l	mg/d			
5M. Chromium, Total (7440-47-3)		X		.040	363.4						mg/l	mg/d			
6M. Copper, Total (7440-50-8)		X		.031	281.6						mg/l	mg/d			
7M. Lead, Total (7439-92-1)			X	< .050	< 454.2						mg/l	mg/d			
8M. Mercury, Total (7439-97-6)			X	< .0002	< 1.8						mg/l	mg/d			
9M. Nickel, Total (7440-02-0)		X		0.06	545.0						mg/l	mg/d			
10M. Selenium, Total (7782-49-2)			X	< .001	< 9.1						mg/l	mg/d			
11M. Silver, Total (7440-22-4)			X	< .010	< 90.8						mg/l	mg/d			
12M. Thallium, Total (7440-28-0)			X	< 0.4	< 3.6						mg/l	g/d			
13M. Zinc, Total (7440-66-6)		X		.043	390.6						mg/l	mg/d			
14M. Cyanide, Total (57-12-5)			X	< .01	< 90.8						mg/l	mg/d			
15M. Phenols, Total			X	< .01	< 90.8						mg/l	mg/d			
DIOXIN															
2,3,7,8 Tetra chlorodibenzo P Dioxin (1764-01-6)			X	DESCRIBE RESULTS											

CONTINUED FROM THE FRONT

1. POLLUTANT AND CAS NUMBER (if available)	2. MARK "X" a. TESTING REQUIRED	b. BELIEVED PRESENT	c. BELIEVED ABSENT	3. EFFLUENT a. MAXIMUM DAILY VALUE (1) CONCENTRATION	(2) MASS	b. MAXIMUM 30 DAY VALUE (if available) (1) CONCENTRATION	(2) MASS	c. LONG TERM AVG. VALUE (if available) (1) CONCENTRATION	(2) MASS	d. NO. OF ANALYSES	4. UNITS a. CONCENTRATION	b. MASS	5. INTAKE (optional) a. LONG TERM AVERAGE VALUE (1) CONCENTRATION	(2) MASS	b. NO. OF ANALYSES
GC/MS FRACTION – VOLATILE COMPOUNDS															
1V. Acrolein (107-02-8)			X												
2V. Acrylonitrile (107-13-1)			X												
3V. Benzene (71-43-2)			X	< .005	< 45.4						mg/l	mg/d			
4V. Bis (Chloromethyl) Ether (542-88-1)			X												
5V. Bromoform (75-25-2)			X	< .005	< 45.4						mg/l	mg/d			
6V. Carbon Tetrachloride (56-23-5)			X	< .005	< 45.4						mg/l	mg/d			
7V. Chlorobenzene (108-90-7)			X	< .005	< 45.4						mg/l	mg/d			
8V. Chlorodibromomethane (124-48-1)			X	< .005	< 45.4						mg/l	mg/d			
9V. Chloroethane (75-00-3)			X	< .010	< 90.8						mg/l	mg/d			
10V. 2-Chloroethylvinyl Ether (110-75-8)			X												
11V. Chloroform (67-66-3)			X	< .005	< 45.4						mg/l	mg/d			
12V. Dichlorobromomethane (75-27-4)			X	< .005	< 45.4						mg/l	mg/d			
13V. Dichlorodifluoromethane (75-71-8)			X												
14V. 1,1-Dichloroethane (75-34-3)			X	< .005	< 45.4						mg/l	mg/d			
15V. 1,2-Dichloroethane (107-06-2)			X	< .005	< 45.4						mg/l	mg/d			
16V. 1,1-Dichloroethylene (75-35-4)			X	< .005	< 45.4						mg/l	mg/d			
17V. 1,2-Dichloropropane (78-87-5)			X	< .005	< 45.4						mg/l	mg/d			
18V. 1,3-Dichloropropylene (542-75-6)			X												
19V. Ethylbenzene (100-41-4)			X	< .005	< 45.4						mg/l	mg/d			
20V. Methyl Bromide (74-83-9)			X	< .010	< 90.8						mg/l	mg/d			
21V. Methyl Chloride (74-87-3)			X	< .010	< 90.8						mg/l	mg/d			

CONTINUE ON PAGE V-5

CONTINUED FROM PAGE V-4

EPA I.D. NUMBER (copy from Item 1 of Form 1)	OUTFALL NUMBER
NM0890010515	04A139

Form Approved
OMB No. 2040-0086
Approval expires 7-31-88

1. POLLUTANT AND CAS NUMBER (if available)	2. MARK 'X' a. TESTING REQUIRED	b. BELIEVED PRESENT	c. BELIEVED ABSENT	3. EFFLUENT a. MAXIMUM DAILY VALUE (1) CONCENTRATION	(2) MASS	b. MAXIMUM 30 DAY VALUE (if available) (1) CONCENTRATION	(2) MASS	c. LONG TERM AVRG. VALUE (if available) (1) CONCENTRATION	(2) MASS	d. NO. OF ANALYSES	4. UNITS a. CONCENTRATION	b. MASS	5. INTAKE (optional) a. LONG TERM AVERAGE VALUE (1) CONCENTRATION	(2) MASS	b. NO. OF ANALYSES
GC/MS FRACTION – VOLATILE COMPOUNDS (continued)															
22V. Methylene Chloride (75-09-2)			X	< .005	< 45.4						mg/l	mg/d			
23V. 1,1,2,2-Tetrachloroethane (79-34-5)			X	< .005	< 45.4						mg/l	mg/d			
24V. Tetrachloroethylene (127-18-4)			X	< .005	< 45.4						mg/l	mg/d			
25V. Toluene (108-88-3)			X	< .005	< 45.4						mg/l	mg/d			
26V. 1,2-Trans-Dichloroethylene (156-60-5)			X	< .005	< 45.4						mg/l	mg/d			
27V. 1,1,1-Trichloroethane (71-55-6)			X	< .005	< 45.4						mg/l	mg/d			
28V. 1,1,2-Trichloroethane (79-00-5)			X	< .005	< 45.4						mg/l	mg/d			
29V. Trichloroethylene (79-01-6)			X	< .005	< 45.4						mg/l	mg/d			
30V. Trichlorofluoromethane (75-69-4)			X	< .005	< 45.4						mg/l	mg/d			
31V. Vinyl Chloride (75-01-4)			X	< .010	< 90.8						mg/l	mg/d			
GC/MS FRACTION – ACID COMPOUNDS															
1A. 2-Chlorophenol (95-57-8)			X	< .010	< 90.8						mg/l	mg/d			
2A. 2,4-Dichlorophenol (120-83-2)			X	< .010	< 90.8						mg/l	mg/d			
3A. 2,4-Dimethylphenol (105-67-9)			X	< .010	< 90.8						mg/l	mg/d			
4A. 4,6-Dinitro-O-Cresol (534-52-1)			X	< .010	< 90.8						mg/l	mg/d			
5A. 2,4-Dinitrophenol (51-28-5)			X	< .010	< 90.8						mg/l	mg/d			
6A. 2-Nitrophenol (88-75-5)			X	< .010	< 90.8						mg/l	mg/d			
7A. 4-Nitrophenol (100-02-7)			X	< .010	< 90.8						mg/l	mg/d			
8A. P-Chloro-M-Cresol (59-50-7)			X	< .010	< 90.8						mg/l	mg/d			
9A. Pentachlorophenol (87-86-5)			X	< .010	< 90.8						mg/l	mg/d			
10A. Phenol (108-95-2)			X	< .010	< 90.8						mg/l	mg/d			
11A. 2,4,6-Trichlorophenol (88-06-2)			X	< .010	< 90.8						mg/l	mg/d			

CONTINUED FROM THE FRONT

1. POLLUTANT AND CAS NUMBER (if available)	2. MARK "X" a. TESTING REQUIRED	b. BELIEVED PRESENT	c. BELIEVED ABSENT	3. EFFLUENT a. MAXIMUM DAILY VALUE (1) CONCENTRATION	(2) MASS	b. MAXIMUM 30 DAY VALUE (if available) (1) CONCENTRATION	(2) MASS	c. LONG TERM AVRG. VALUE (if available) (1) CONCENTRATION	(2) MASS	d. NO. OF ANALYSES	4. UNITS a. CONCENTRATION	b. MASS	5. INTAKE (optional) a. LONG TERM AVERAGE VALUE (1) CONCENTRATION	(2) MASS	b. NO. OF ANALYSES
GC/MS FRACTION – BASE/NEUTRAL COMPOUNDS															
1B. Acenaphthene (83-32-9)			X	< .010	< 90.8						mg/l	mg/d			
2B. Acenaphtylene (208-96-8)			X	< .010	< 90.8						mg/l	mg/d			
3B. Anthracene (120-12-7)			X	< .010	< 90.8						mg/l	mg/d			
4B. Benzidine (92-87-5)			X	< .010	< 90.8						mg/l	mg/d			
5B. Benzo *(a)* Anthracene (56-55-3)			X	< .010	< 90.8						mg/l	mg/d			
6B. Benzo *(a)* Pyrene (50-32-8)			X	< .010	< 90.8						mg/l	mg/d			
7B. 3,4-Benzo-fluoranthene (205-99-2)			X	< .010	< 90.8						mg/l	mg/d			
8B. Benzo *(ghi)* Perylene (191-24-2)			X	< .010	< 90.8						mg/l	mg/d			
9B. Benzo *(k)* Fluoranthene (207-08-9)			X	< .010	< 90.8						mg/l	mg/d			
10B. Bis *(2-Chloro-ethoxy)* Methane (111-91-1)			X	< .010	< 90.8						mg/l	mg/d			
11B. Bis *(2-Chloro-ethyl)* Ether (111-44-4)			X	< .010	< 90.8						mg/l	mg/d			
12B. Bis *(2-Chloroiso-propyl)* Ether (102-60-1)			X	< .010	< 90.8						mg/l	mg/d			
13B. Bis *(2-Ethyl-hexyl)* Phthalate (117-81-7)			X	< .010	< 90.8						mg/l	mg/d			
14B. 4-Bromo-phenyl Phenyl Ether (101-55-3)			X	< .010	< 90.8						mg/l	mg/d			
15B. Butyl Benzyl Phthalate (85-68-7)			X	< .010	< 90.8						mg/l	mg/d			
16B. 2-Chloro-naphthalene (91-58-7)			X	< .010	< 90.8						mg/l	mg/d			
17B. 4-Chloro-phenyl Phenyl Ether (7005-72-3)			X	< .010	< 90.8						mg/l	mg/d			
18B. Chrysene (218-01-9)			X	< .010	< 90.8						mg/l	mg/d			
19B. Dibenzo *(a,h)* Anthracene (53-70-3)			X	< .010	< 90.8						mg/l	mg/d			
20B. 1,2-Dichloro-benzene (95-50-1)			X	< .010	< 90.8						mg/l	mg/d			
21B. 1,3-Dichloro-benzene (541-73-1)			X	< .010	< 90.8						mg/l	mg/d			

CONTINUE ON PAGE V-7

EPA I.D. NUMBER (copy from Item 1 of Form 1): NM0890010515
OUTFALL NUMBER: 04A139

Form Approved
OMB No. 2040-0086
Approval expires 7-31-88

1. POLLUTANT AND CAS NUMBER (if available)	2. MARK 'X' a. TEST INCLUDED	b. BELIEVED PRESENT	c. BELIEVED ABSENT	3. EFFLUENT a. MAXIMUM DAILY VALUE (1) CONCENTRATION	(2) MASS	b. MAXIMUM 30 DAY VALUE (if available) (1) CONCENTRATION	(2) MASS	c. LONG TERM AVRG. VALUE (if available) (1) CONCENTRATION	(2) MASS	d. NO. OF ANALYSES	4. UNITS a. CONCENTRATION	b. MASS	5. INTAKE (optional) a. LONG TERM AVERAGE VALUE (1) CONCENTRATION	(2) MASS	b. NO. OF ANALYSES
GC/MS FRACTION – BASE/NEUTRAL COMPOUNDS *(continued)*															
22B. 1,4-Dichlorobenzene (106-46-7)			X	< .010	< 90.8						mg/l	mg/d			
23B. 3,3'-Dichlorobenzidine (91-94-1)			X	< .010	< 90.8						mg/l	mg/d			
24B. Diethyl Phthalate (84-66-2)			X	< .010	< 90.8						mg/l	mg/d			
25B. Dimethyl Phthalate (131-11-3)			X	< .010	< 90.8						mg/l	mg/d			
26B. Di-N-Butyl Phthalate (84-74-2)			X	< .010	< 90.8						mg/l	mg/d			
27B. 2,4-Dinitrotoluene (121-14-2)			X	< .010	< 90.8						mg/l	mg/d			
28B. 2,6-Dinitrotoluene (606-20-2)			X	< .010	< 90.8						mg/l	mg/d			
29B. Di-N-Octyl Phthalate (117-84-0)			X	< .010	< 90.8						mg/l	mg/d			
30B. 1,2-Diphenylhydrazine *(as Azobenzene)* (122-66-7)			X	< .010	< 90.8						mg/l	mg/d			
31B. Fluoranthene (206-44-0)			X	< .010	< 90.8						mg/l	mg/d			
32B. Fluorene (86-73-7)			X	< .010	< 90.8						mg/l	mg/d			
33B. Hexachlorobenzene (118-74-1)			X	< .010	< 90.8						mg/l	mg/d			
34B. Hexachlorobutadiene (87-68-3)			X	< .010	< 90.8						mg/l	mg/d			
35B. Hexachlorocyclopentadiene (77-47-4)			X	< .010	< 90.8						mg/l	mg/d			
36B. Hexachloroethane (67-72-1)			X	< .010	< 90.8						mg/l	mg/d			
37B. Indeno *(1,2,3-cd)* Pyrene (193-39-5)			X	< .010	< 90.8						mg/l	mg/d			
38B. Isophorone (78-59-1)			X	< .010	< 90.8						mg/l	mg/d			
39B. Naphthalene (91-20-3)			X	< .010	< 90.8						mg/l	mg/d			
40B. Nitrobenzene (98-95-3)			X	< .010	< 90.8						mg/l	mg/d			
41B. N-Nitrosodimethylamine (62-75-9)			X	< .010	< 90.8						mg/l	mg/d			
42B. N-Nitrosodi-N-Propylamine (621-64-7)			X	< .010	< 90.8						mg/l	mg/d			

CONTINUED FROM THE FRONT

1. POLLUTANT AND CAS NUMBER (if available)	2. MARK 'X' a. TESTING REQUIRED	b. BELIEVED PRESENT	c. BELIEVED ABSENT	3. EFFLUENT a. MAXIMUM DAILY VALUE (1) CONCENTRATION	(2) MASS	b. MAXIMUM 30 DAY VALUE (if available) (1) CONCENTRATION	(2) MASS	c. LONG TERM AVRG. VALUE (if available) (1) CONCENTRATION	(2) MASS	d. NO. OF ANALYSES	4. UNITS a. CONCENTRATION	b. MASS	5. INTAKE (optional) a. LONG TERM AVERAGE VALUE (1) CONCENTRATION	(2) MASS	b. NO. OF ANALYSES
GC/MS FRACTION – BASE/NEUTRAL COMPOUNDS *(continued)*															
43B. N-Nitrosodiphenylamine (86-30-6)			X	< .010	< 90.8						mg/l	mg/d			
44B. Phenanthrene (85-01-8)			X	< .010	< 90.8						mg/l	mg/d			
45B. Pyrene (129-00-0)			X	< .010	< 90.8						mg/l	mg/d			
46B. 1,2,4 - Trichlorobenzene (120-82-1)			X	< .010	< 90.8						mg/l	mg/d			
GC/MS FRACTION – PESTICIDES															
1P. Aldrin (309-00-2)			X	< .06	< 545.0						ug/l	ug/d			
2P. α-BHC (319-84-6)			X	< .02	< 181.7						ug/l	ug/d			
3P. β-BHC (319-85-7)			X	< .1	< 908.4						ug/l	ug/d			
4P. γ-BHC (58-89-9)			X	< .03	< 272.5						ug/l	ug/d			
5P. δ-BHC (319-86-8)			X	< .12	< 1.1						ug/l	mg/d			
6P. Chlordane (57-74-9)			X	< .25	< 2.3						ug/l	mg/d			
7P. 4,4'-DDT (50-29-3)			X	< .06	< 545.0						ug/l	ug/d			
8P. 4,4'-DDE (72-55-9)			X	< .08	< 726.7						ug/l	ug/d			
9P. 4,4'-DDD (72-54-8)			X	< .08	< 726.7						ug/l	ug/d			
10P. Dieldrin (60-57-1)			X	< .08	< 726.7						ug/l	ug/d			
11P. α-Endosulfan (115-29-7)			X	< .05	< 454.2						ug/l	ug/d			
12P. β-Endosulfan (115-29-7)			X	< .08	< 726.7						ug/l	ug/d			
13P. Endosulfan Sulfate (1031-07-8)			X	< .09	< 817.6						ug/l	ug/d			
14P. Endrin (72-20-8)			X	< .06	< 545.0						ug/l	ug/d			
15P. Endrin Aldehyde (7421-93-4)			X	< .62	< 5.6						ug/l	mg/d			
16P. Heptachlor (76-44-8)			X	< .03	< 272.5						ug/l	ug/d			

 CONTINUE ON PAGE V-9

EPA I.D. NUMBER (copy from Item 1 of Form 1)	OUTFALL NUMBER
NM0890010515	04A139

Form Approved
OMB No. 2040-0086
Approval expires 7-31-88

1. POLLUTANT AND CAS NUMBER (if available)	2. MARK 'X' a. TEST INCLUDED	b. REQUIRED PRESENT	c. REQUIRED ABSENT	3. EFFLUENT a. MAXIMUM DAILY VALUE (1) CONCENTRATION	(2) MASS	b. MAXIMUM 30 DAY VALUE (1) CONCENTRATION	(2) MASS	c. LONG TERM AVRG. VALUE (1) CONCENTRATION	(2) MASS	d. NO. OF ANALYSES	4. UNITS a. CONCENTRATION	b. MASS	5. INTAKE (optional) a. LONG TERM AVRG. VALUE (1) CONCENTRATION	(2) MASS	b. NO. OF ANALYSES
GC/MS FRACTION – PESTICIDES *(continued)*															
17P. Heptachlor Epoxide (1024-57-3)			X	< .04	< 363.4						ug/l	ug/d			
18P. PCB-1242 (53469-21-9)			X	< .68	< 6.2						ug/l	mg/d			
19P. PCB-1254 (11097-69-1)			X	< .68	< 6.2						ug/l	mg/d			
20P. PCB-1221 (11104-28-2)			X												
21P. PCB-1232 (11141-16-5)			X												
22P. PCB-1248 (12672-29-6)			X												
23P. PCB-1260 (11096-82-5)			X	< .68	< 6.2						ug/l	mg/d			
24P. PCB-1016 (12674-11-2)			X												
25P. Toxaphene (8001-35-2)			X	< 2.5	< 22.7						ug/l	mg/d			

SCHEMATIC OF WATER FLOW
OUTFALL 04A139

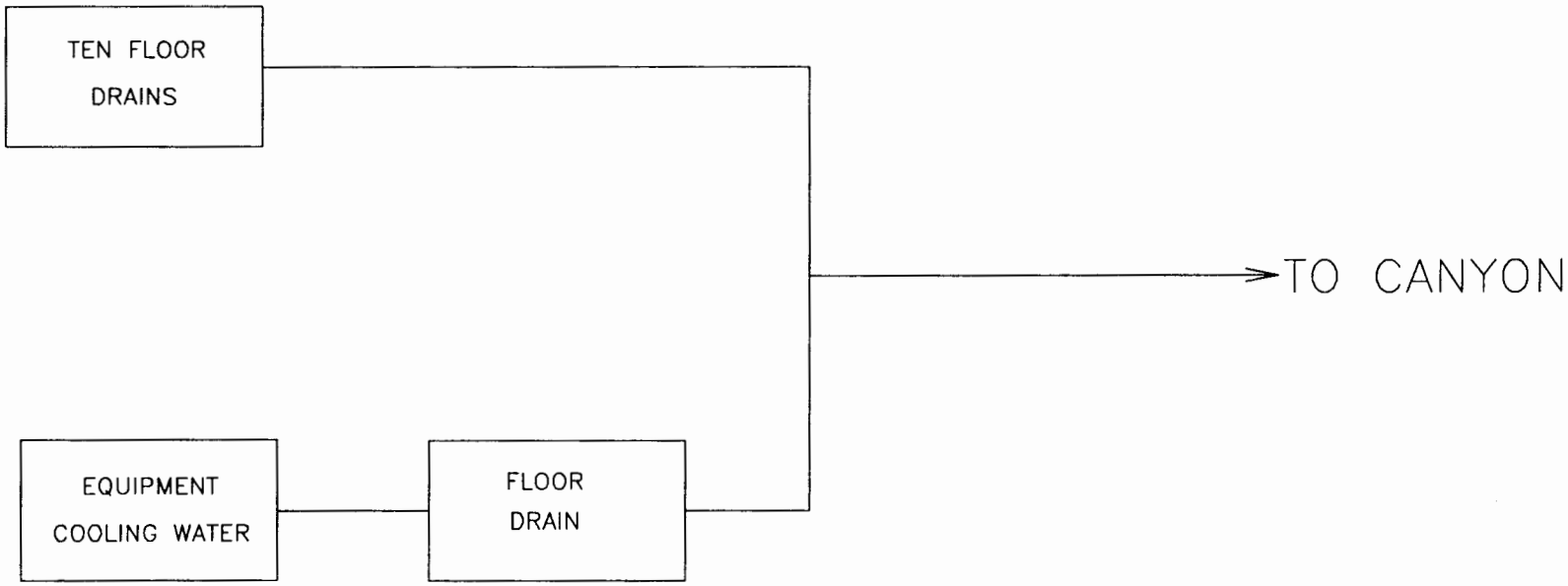

PLEASE PRINT OR TYPE IN THE UNSHADED AREAS ONLY. You may report some or all of this information on separate sheets *(use the same format)* instead of completing these pages. SEE INSTRUCTIONS

EPA I.D. NUMBER *(copy from Item 1 of Form 1)*: NM0890010515

Form Approved
OMB No. 2040-0086
Approval expires 7-31-88

V. INTAKE AND EFFLUENT CHARACTERISTICS *(continued from page 3 of Form 2-C)*

OUTFALL NO. 04A143

PART A - You must provide the results of at least one analysis for every pollutant in this table. Complete one table for each outfall. See instructions for additional details.

1. POLLUTANT	2. EFFLUENT a. MAXIMUM DAILY VALUE (1) CONCENTRATION	a. MAXIMUM DAILY VALUE (2) MASS	b. MAXIMUM 30 DAY VALUE (if available) (1) CONCENTRATION	b. MAXIMUM 30 DAY VALUE (2) MASS	c. LONG TERM AVRG. VALUE (if available) (1) CONCENTRATION	c. LONG TERM AVRG. VALUE (2) MASS	d. NO. OF ANALYSES	3. UNITS (specify if blank) a. CONCENTRATION	b. MASS	4. INTAKE (optional) a. LONG TERM AVERAGE VALUE (1) CONCENTRATION	a. LONG TERM AVERAGE VALUE (2) MASS	b. NO. OF ANALYSES
a. Biochemical Oxygen Demand *(BOD)*	< 2.0	< 378.5						mg/l	mg/d			
b. Chemical Oxygen Demand *(COD)*	< 10.0	< 1.9						mg/l	g/d			
c. Total Organic Carbon *(TOC)*	.59	111.7						mg/l	mg/d			
d. Total Suspended Solids *(TSS)*	18.0	3.4						mg/l	g/d			
e. Ammonia *(as N)*	< 0.1	18.9						mg/l	mg/d			
f. Flow	VALUE 50		VALUE		VALUE			gal/day	of non-contact cooling			water
g. Temperature *(winter)*	VALUE 13.9		VALUE		VALUE			°C		VALUE		
h. Temperature *(summer)*	VALUE NA		VALUE		VALUE			°C		VALUE		
i. pH	MINIMUM 8.45	MAXIMUM 8.80	MINIMUM 8.3	MAXIMUM 8.9				STANDARD UNITS				

PART B - Mark "X" in column 2-a for each pollutant you know or have reason to believe is present. Mark "X" in column 2-b for each pollutant you believe to be absent. If you mark column 2a for any pollutant which is limited either directly, or indirectly but expressly, in an effluent limitations guideline, you must provide the results of at least one analysis for that pollutant. For other pollutants for which you mark column 2a, you must provide quantitative data or an explanation of their presence in your discharge. Complete one table for each outfall. See the instructions for additional details and requirements.

1. POLLUTANT AND CAS NO. *(if available)*	2. MARK "X" a. BELIEVED PRESENT	b. BELIEVED ABSENT	3. EFFLUENT a. MAXIMUM DAILY VALUE (1) CONCENTRATION	a. MAXIMUM DAILY VALUE (2) MASS	b. MAXIMUM 30 DAY VALUE (if available) (1) CONCENTRATION	b. MAXIMUM 30 DAY VALUE (2) MASS	c. LONG TERM AVRG. VALUE (if available) (1) CONCENTRATION	c. LONG TERM AVRG. VALUE (2) MASS	d. NO. OF ANALYSES	4. UNITS a. CONCENTRATION	b. MASS	5. INTAKE (optional) a. LONG TERM AVERAGE VALUE (1) CONCENTRATION	a. LONG TERM AVERAGE VALUE (2) MASS	b. NO. OF ANALYSES
a. Bromide (24959-67-9)		X	< 0.5	< 94.6						mg/l	mg/d			
b. Chlorine, Total Residual	X		0.05	9.5						mg/l	mg/d			
c. Color	X		7.0							units				
d. Fecal Coliform		X												
e. Fluoride (16984-48-8)	X		.21	39.7						mg/l	mg/d			
f. Nitrate-Nitrite *(as N)*	X		.304	57.5						mg/l	mg/d			

CONTINUE ON REVERSE

ITEM V-B CONTINUED FROM FRONT

1. POLLUTANT AND CAS NO. (if available)	2. MARK 'X' a. BELIEVED PRESENT	b. BELIEVED ABSENT	3. EFFLUENT a. MAXIMUM DAILY VALUE (1) CONCENTRATION	(2) MASS	b. MAXIMUM 30 DAY VALUE (if available) (1) CONCENTRATION	(2) MASS	c. LONG TERM AVRG. VALUE (if available) (1) CONCENTRATION	(2) MASS	d. NO. OF ANALYSES	4. UNITS a. CONCENTRATION	b. MASS	5. INTAKE (optional) a. LONG TERM AVERAGE VALUE (1) CONCENTRATION	(2) MASS	b. NO. OF ANALYSES
g. Nitrogen, Total Organic (as N)		X	< 0.5	< 94.6						mg/l	mg/d			
h. Oil and Grease		X	< 1.05	< 0.2						mg/l	g/d			
i. Phosphorus (as P), Total (7723-14-0)	X		.05	9.5						mg/l	mg/d			
j. Radioactivity														
(1) Alpha, Total	X		0.1	18.9						pCi/l	pCi/l			
(2) Beta, Total	X		6.6	1.2						pCi/l	nCi/l			
(3) Radium, Total	X													
(4) Radium 226, Total	X		.06	11.4						pCi/l	pCi/l			
k. Sulfate (as SO_4) (14808-79-8)	X		3.16	0.6						mg/l	g/d			
l. Sulfide (as S)		X												
m. Sulfite (as SO_3) (14265-45-3)		X	< .05	< 9.5						mg/l	mg/d			
n. Surfactants		X	< .1	< 18.9						mg/l	mg/d			
o. Aluminum, Total (7429-90-5)		X	< 0.04	< 7.6						mg/l	mg/d			
p. Barium, Total (7440-39-3)	X		0.03	5.7						mg/l	mg/d			
q. Boron, Total (7440-42-8)	X		0.02	3.8						mg/l	mg/d			
r. Cobalt, Total (7440-48-4)		X	< .1	< 18.9						mg/l	mg/d			
s. Iron, Total (7439-89-6)	X		0.41	77.6						mg/l	mg/d			
t. Magnesium, Total (7439-95-4)	X		2.5	0.5						mg/l	g/d			
u. Molybdenum, Total (7439-98-7)		X	< .02	< 3.8						mg/l	mg/d			
v. Manganese, Total (7439-96-5)	X		.01	1.9						mg/l	mg/d			
w. Tin, Total (7440-31-5)		X	< .050	< 9.5						mg/l	mg/d			
x. Titanium, Total (7440-32-6)		X	< .004	< 0.8						mg/l	mg/d			

CONTINUE ON PAGE V-3

EPA I.D. NUMBER (copy from Item 1 of Form 1)	OUTFALL NUMBER
NM0890010515	04A143

Form Approved.
OMB No. 2040-0086
Approval expires 7-31-88

CONTINUED FROM PAGE 3 OF FORM 2-C

PART C - If you are a primary industry and this outfall contains process wastewater, refer to Table 2c-2 in the instructions to determine which of the GC/MS fractions you must test for. Mark "X" in column 2-a for all such GC/MS fractions that apply to your industry and for ALL toxic metals, cyanides, and total phenols. If you are not required to mark column 2-a *(secondary industries, nonprocess wastewater outfalls, and nonrequired GC/MS fractions)*, mark "X" in column 2-b for each pollutant you know or have reason to believe is present. Mark "X" in column 2-c for each pollutant you believe is absent. If you mark column 2a for any pollutant, you must provide the results of at least one analysis for that pollutant. If you mark column 2b for any pollutant, you must provide the results of at least one analysis for that pollutant if you know or have reason to believe it will be discharged in concentrations of 10 ppb or greater. If you mark column 2b for acrolein, acrylonitrile, 2,4 dinitrophenol, or 2-methyl-4, 6 dinitrophenol, you must provide the results of at least one analysis for each of these pollutants which you know or have reason to believe that you discharge in concentrations of 100 ppb or greater. Otherwise, for pollutants for which you mark column 2b, you must either submit at least one analysis or briefly describe the reasons the pollutant is expected to be discharged. Note that there are 7 pages to this part; please review each carefully. Complete one table *(all 7 pages)* for each outfall. See instructions for additional details and requirements.

1. POLLUTANT AND CAS NUMBER (if available)	2. MARK 'X'			3. EFFLUENT							4. UNITS		5. INTAKE (optional)		
	a. TESTING REQUIRED	b. BELIEVED PRESENT	c. BELIEVED ABSENT	a. MAXIMUM DAILY VALUE (1) CONCENTRATION	a. MAXIMUM DAILY VALUE (2) MASS	b. MAXIMUM 30 DAY VALUE (if available) (1) CONCENTRATION	b. MAXIMUM 30 DAY VALUE (if available) (2) MASS	c. LONG TERM AVRG. VALUE (if available) (1) CONCENTRATION	c. LONG TERM AVRG. VALUE (if available) (2) MASS	d. NO. OF ANALYSES	a. CONCENTRATION	b. MASS	a. LONG TERM AVERAGE VALUE (1) CONCENTRATION	a. LONG TERM AVERAGE VALUE (2) MASS	b. NO. OF ANALYSES
METALS, CYANIDE, AND TOTAL PHENOLS															
1M. Antimony, Total (7440-36-0)			X	< .050	< 9.5						mg/l	mg/d			
2M. Arsenic, Total (7440-38-2)		X		.002	0.4						mg/l	mg/d			
3M. Beryllium, Total, 7440-41-7)			X	< .001	< 0.2						mg/l	mg/d			
4M. Cadmium, Total (7440-43-9)			X	< .010	< 1.9						mg/l	mg/d			
5M. Chromium, Total (7440-47-3)		X		.040	7.6						mg/l	mg/d			
6M. Copper, Total (7440-50-8)		X		.031	5.9						mg/l	mg/d			
7M. Lead, Total (7439-92-1)			X	< .050	< 9.5						mg/l	mg/d			
8M. Mercury, Total (7439-97-6)			X	< .0002	< 37.9						mg/l	ug/d			
9M. Nickel, Total (7440-02-0)		X		0.06	11.4						mg/l	mg/d			
10M. Selenium, Total (7782-49-2)			X	< .001	< 0.2						mg/l	mg/d			
11M. Silver, Total (7440-22-4)			X	< .010	< 1.9						mg/l	mg/d			
12M. Thallium, Total (7440-28-0)			X	< 0.4	< 75.7						mg/l	mg/d			
13M. Zinc, Total (7440-66-6)		X		.043	8.1						mg/l	mg/d			
14M. Cyanide, Total (57-12-5)			X	< .01	< 1.9						mg/l	mg/d			
15M. Phenols, Total			X	< .01	< 1.9						mg/l	mg/d			
DIOXIN															
2,3,7,8 Tetra chlorodibenzo P Dioxin (1764-01-6)			X	DESCRIBE RESULTS											

CONTINUED FROM THE FRONT

1. POLLUTANT AND CAS NUMBER (if available)	2. MARK "X" a. TEST INCLUDED IN REQUIRED ANALYSIS	b. BELIEVED PRESENT	c. BELIEVED ABSENT	3. EFFLUENT a. MAXIMUM DAILY VALUE (1) CONCENTRATION	(2) MASS	b. MAXIMUM 30 DAY VALUE (if available) (1) CONCENTRATION	(2) MASS	c. LONG TERM AVRG. VALUE (if available) (1) CONCENTRATION	(2) MASS	d. NO. OF ANALYSES	4. UNITS a. CONCENTRATION	b. MASS	5. INTAKE (optional) a. LONG TERM AVERAGE VALUE (1) CONCENTRATION	(2) MASS	b. NO. OF ANALYSES
GC/MS FRACTION – VOLATILE COMPOUNDS															
1V. Acrolein (107-02-8)			X												
2V. Acrylonitrile (107-13-1)			X												
3V. Benzene (71-43-2)			X	< .005	< 0.9						mg/l	mg/d			
4V. Bis (Chloromethyl) Ether (542-88-1)			X												
5V. Bromoform (75-25-2)			X	< .005	< 0.9						mg/l	mg/d			
6V. Carbon Tetrachloride (56-23-5)			X	< .005	< 0.9						mg/l	mg/d			
7V. Chlorobenzene (108-90-7)			X	< .005	< 0.9						mg/l	mg/d			
8V. Chlorodibromomethane (124-48-1)			X	< .005	< 0.9						mg/l	mg/d			
9V. Chloroethane (75-00-3)			X	< .010	< 1.9						mg/l	mg/d			
10V. 2-Chloroethylvinyl Ether (110-75-8)			X												
11V. Chloroform (67-66-3)			X	< .005	< 0.9						mg/l	mg/d			
12V. Dichlorobromomethane (75-27-4)			X	< .005	< 0.9						mg/l	mg/d			
13V. Dichlorodifluoromethane (75-71-8)			X												
14V. 1,1-Dichloroethane (75-34-3)			X	< .005	< 0.9						mg/l	mg/d			
15V. 1,2-Dichloroethane (107-06-2)			X	< .005	< 0.9						mg/l	mg/d			
16V. 1,1-Dichloroethylene (75-35-4)			X	< .005	< 0.9						mg/l	mg/d			
17V. 1,2-Dichloropropane (78-87-5)			X	< .005	< 0.9						mg/l	mg/d			
18V. 1,3-Dichloropropylene (542-75-6)			X												
19V. Ethylbenzene (100-41-4)			X	< .005	< 0.9						mg/l	mg/d			
20V. Methyl Bromide (74-83-9)			X	< .010	< 1.9						mg/l	mg/d			
21V. Methyl Chloride (74-87-3)			X	< .010	< 1.9						mg/l	mg/d			

CONTINUE ON PAGE V-5

CONTINUED FROM PAGE V-4

EPA I.D. NUMBER (copy from Item 1 of Form 1)	OUTFALL NUMBER
NM0890010515	04A143

Form Approved
OMB No. 2040-0086
Approval expires 7-31-88

1. POLLUTANT AND CAS NUMBER (if available)	2. MARK "X" a. TESTING REQUIRED	b. BELIEVED PRESENT	c. BELIEVED ABSENT	3. EFFLUENT a. MAXIMUM DAILY VALUE (1) CONCENTRATION	(2) MASS	b. MAXIMUM 30 DAY VALUE (if available) (1) CONCENTRATION	(2) MASS	c. LONG TERM AVRG. VALUE (if available) (1) CONCENTRATION	(2) MASS	d. NO. OF ANALYSES	4. UNITS a. CONCENTRATION	b. MASS	5. INTAKE (optional) a. LONG TERM AVERAGE VALUE (1) CONCENTRATION	(2) MASS	b. NO. OF ANALYSES
GC/MS FRACTION – VOLATILE COMPOUNDS *(continued)*															
22V. Methylene Chloride (75-09-2)			X	< .005	< 0.9						mg/l	mg/d			
23V. 1,1,2,2-Tetrachloroethane (79-34-5)			X	< .005	< 0.9						mg/l	mg/d			
24V. Tetrachloroethylene (127-18-4)			X	< .005	< 0.9						mg/l	mg/d			
25V. Toluene (108-88-3)			X	< .005	< 0.9						mg/l	mg/d			
26V. 1,2-Trans-Dichloroethylene (156-60-5)			X	< .005	< 0.9						mg/l	mg/d			
27V. 1,1,1-Trichloroethane (71-55-6)			X	< .005	< 0.9						mg/l	mg/d			
28V. 1,1,2-Trichloroethane (79-00-5)			X	< .005	< 0.9						mg/l	mg/d			
29V. Trichloroethylene (79-01-6)			X	< .005	< 0.9						mg/l	mg/d			
30V. Trichlorofluoromethane (75-69-4)			X	< .005	< 0.9						mg/l	mg/d			
31V. Vinyl Chloride (75-01-4)			X	< .010	< 1.9						mg/l	mg/d			
GC/MS FRACTION – ACID COMPOUNDS															
1A. 2-Chlorophenol (95-57-8)			X	< .010	< 1.9						mg/l	mg/d			
2A. 2,4-Dichlorophenol (120-83-2)			X	< .010	< 1.9						mg/l	mg/d			
3A. 2,4-Dimethylphenol (105-67-9)			X	< .010	< 1.9						mg/l	mg/d			
4A. 4,6-Dinitro-O-Cresol (534-52-1)			X	< .010	< 1.9						mg/l	mg/d			
5A. 2,4-Dinitrophenol (51-28-5)			X	< .010	< 1.9						mg/l	mg/d			
6A. 2-Nitrophenol (88-75-5)			X	< .010	< 1.9						mg/l	mg/d			
7A. 4-Nitrophenol (100-02-7)			X	< .010	< 1.9						mg/l	mg/d			
8A. P-Chloro-M-Cresol (59-50-7)			X	< .010	< 1.9						mg/l	mg/d			
9A. Pentachlorophenol (87-86-5)			X	< .010	< 1.9						mg/l	mg/d			
10A. Phenol (108-95-2)			X	< .010	< 1.9						mg/l	mg/d			
11A. 2,4,6-Trichlorophenol (88-06-2)			X	< .010	< 1.9						mg/l	mg/d			

CONTINUED FROM THE FRONT

1. POLLUTANT AND CAS NUMBER (if available)	2. MARK "X" a. TESTING REQUIRED	b. BELIEVED PRESENT	c. BELIEVED ABSENT	3. EFFLUENT a. MAXIMUM DAILY VALUE (1) CONCENTRATION	(2) MASS	b. MAXIMUM 30 DAY VALUE (if available) (1) CONCENTRATION	(2) MASS	c. LONG TERM AVRG. VALUE (if available) (1) CONCENTRATION	(2) MASS	d. NO. OF ANALYSES	4. UNITS a. CONCENTRATION	b. MASS	5. INTAKE (optional) a. LONG TERM AVERAGE VALUE (1) CONCENTRATION	(2) MASS	b. NO. OF ANALYSES
GC/MS FRACTION -- BASE/NEUTRAL COMPOUNDS															
1B. Acenaphthene (83-32-9)			X	< .010	< 1.9						mg/l	mg/d			
2B. Acenaphtylene (208-96-8)			X	< .010	< 1.9						mg/l	mg/d			
3B. Anthracene (120-12-7)			X	< .010	< 1.9						mg/l	mg/d			
4B. Benzidine (92-87-5)			X	< .010	< 1.9						mg/l	mg/d			
5B. Benzo *(a)* Anthracene (56-55-3)			X	< .010	< 1.9						mg/l	mg/d			
6B. Benzo *(a)* Pyrene (50-32-8)			X	< .010	< 1.9						mg/l	mg/d			
7B. 3,4-Benzo-fluoranthene (205-99-2)			X	< .010	< 1.9						mg/l	mg/d			
8B. Benzo *(ghi)* Perylene (191-24-2)			X	< .010	< 1.9						mg/l	mg/d			
9B. Benzo *(k)* Fluoranthene (207-08-9)			X	< .010	< 1.9						mg/l	mg/d			
10B. Bis *(2-Chloro-ethoxy)* Methane (111-91-1)			X	< .010	< 1.9						mg/l	mg/d			
11B. Bis *(2-Chloro-ethyl)* Ether (111-44-4)			X	< .010	< 1.9						mg/l	mg/d			
12B. Bis *(2-Chloroiso-propyl)* Ether (102-60-1)			X	< .010	< 1.9						mg/l	mg/d			
13B. Bis *(2-Ethyl-hexyl)* Phthalate (117-81-7)			X	< .010	< 1.9						mg/l	mg/d			
14B. 4-Bromo-phenyl Phenyl Ether (101-55-3)			X	< .010	< 1.9						mg/l	mg/d			
15B. Butyl Benzyl Phthalate (85-68-7)			X	< .010	< 1.9						mg/l	mg/d			
16B. 2-Chloro-naphthalene (91-58-7)			X	< .010	< 1.9						mg/l	mg/d			
17B. 4-Chloro-phenyl Phenyl Ether (7005-72-3)			X	< .010	< 1.9						mg/l	mg/d			
18B. Chrysene (218-01-9)			X	< .010	< 1.9						mg/l	mg/d			
19B. Dibenzo *(a,h)* Anthracene (53-70-3)			X	< .010	< 1.9						mg/l	mg/d			
20B. 1,2-Dichloro-benzene (95-50-1)			X	< .010	< 1.9						mg/l	mg/d			
21B. 1,3-Dichloro-benzene (541-73-1)			X	< .010	< 1.9						mg/l	mg/d			

CONTINUE ON PAGE V-7

CONTINUED FROM PAGE V-6

EPA I.D. NUMBER (copy from Item 1 of Form 1): NM0890010515
OUTFALL NUMBER: 04A143

1. POLLUTANT AND CAS NUMBER (if available)	2. MARK 'X' a. TESTING REQUIRED	b. BELIEVED PRESENT	c. BELIEVED ABSENT	3. EFFLUENT a. MAXIMUM DAILY VALUE (1) CONCENTRATION	(2) MASS	b. MAXIMUM 30 DAY VALUE (if available) (1) CONCENTRATION	(2) MASS	c. LONG TERM AVRG. VALUE (if available) (1) CONCENTRATION	(2) MASS	d. NO. OF ANALYSES	4. UNITS a. CONCENTRATION	b. MASS	5. INTAKE (optional) a. LONG TERM AVERAGE VALUE (1) CONCENTRATION	(2) MASS	b. NO. OF ANALYSES
GC/MS FRACTION – BASE/NEUTRAL COMPOUNDS *(continued)*															
22B. 1,4-Dichlorobenzene (106-46-7)			X	< .010	< 1.9						mg/l	mg/d			
23B. 3,3'-Dichlorobenzidine (91-94-1)			X	< .010	< 1.9						mg/l	mg/d			
24B. Diethyl Phthalate (84-66-2)			X	< .010	< 1.9						mg/l	mg/d			
25B. Dimethyl Phthalate (131-11-3)			X	< .010	< 1.9						mg/l	mg/d			
26B. Di-N-Butyl Phthalate (84-74-2)			X	< .010	< 1.9						mg/l	mg/d			
27B. 2,4-Dinitrotoluene (121-14-2)			X	< .010	< 1.9						mg/l	mg/d			
28B. 2,6-Dinitrotoluene (606-20-2)			X	< .010	< 1.9						mg/l	mg/d			
29B. Di-N'-Octyl Phthalate (117-84-0)			X	< .010	< 1.9						mg/l	mg/d			
30B. 1,2-Diphenylhydrazine *(as Azobenzene)* (122-66-7)			X	< .010	< 1.9						mg/l	mg/d			
31B. Fluoranthene (206-44-0)			X	< .010	< 1.9						mg/l	mg/d			
32B. Fluorene (86-73-7)			X	< .010	< 1.9						mg/l	mg/d			
33B. Hexachlorobenzene (118-74-1)			X	< .010	< 1.9						mg/l	mg/d			
34B. Hexachlorobutadiene (87-68-3)			X	< .010	< 1.9						mg/l	mg/d			
35B. Hexachlorocyclopentadiene (77-47-4)			X	< .010	< 1.9						mg/l	mg/d			
36B. Hexachloroethane (67-72-1)			X	< .010	< 1.9						mg/l	mg/d			
37B. Indeno *(1,2,3-cd)* Pyrene (193-39-5)			X	< .010	< 1.9						mg/l	mg/d			
38B. Isophorone (78-59-1)			X	< .010	< 1.9						mg/l	mg/d			
39B. Naphthalene (91-20-3)			X	< .010	< 1.9						mg/l	mg/d			
40B. Nitrobenzene (98-95-3)			X	< .010	< 1.9						mg/l	mg/d			
41B. N-Nitrosodimethylamine (62-75-9)			X	< .010	< 1.9						mg/l	mg/d			
42B. N-Nitrosodi-N-Propylamine (621-64-7)			X	< .010	< 1.9						mg/l	mg/d			

CONTINUED FROM THE FRONT

1. POLLUTANT AND CAS NUMBER (if available)	2. MARK 'X' a. TEST INC. QUIR. LD.	b. BELIEVED PRESENT	c. BELIEVED ABSENT	3. EFFLUENT a. MAXIMUM DAILY VALUE (1) CONCENTRATION	(2) MASS	b. MAXIMUM 30 DAY VALUE (if available) (1) CONCENTRATION	(2) MASS	c. LONG TERM AVRG. VALUE (if available) (1) CONCENTRATION	(2) MASS	d. NO. OF ANALYSES	4. UNITS a. CONCENTRATION	b. MASS	5. INTAKE (optional) a. LONG TERM AVERAGE VALUE (1) CONCENTRATION	(2) MASS	b. NO. OF ANALYSES
GC/MS FRACTION – BASE/NEUTRAL COMPOUNDS *(continued)*															
43B. N-Nitrosodiphenylamine (86-30-6)			X	< .010	< 1.9						mg/l	mg/d			
44B. Phenanthrene (85-01-8)			X	< .010	< 1.9						mg/l	mg/d			
45B. Pyrene (129-00-0)			X	< .010	< 1.9						mg/l	mg/d			
46B. 1,2,4 - Trichlorobenzene (120-82-1)			X	< .010	< 1.9						mg/l	mg/d			
GC/MS FRACTION – PESTICIDES															
1P. Aldrin (309-00-2)			X	< .06	< 11.4						ug/l	ug/d			
2P. α-BHC (319-84-6)			X	< .02	< 3.8						ug/l	ug/d			
3P. β-BHC (319-85-7)			X	< .1	< 18.9						ug/l	ug/d			
4P. γ-BHC (58-89-9)			X	< .03	< 5.7						ug/l	ug/d			
5P. δ-BHC (319-86-8)			X	< .12	< 22.7						ug/l	ug/d			
6P. Chlordane (57-74-9)			X	< .25	< 47.3						ug/l	ug/d			
7P. 4,4'-DDT (50-29-3)			X	< .06	< 11.4						ug/l	ug/d			
8P. 4,4'-DDE (72-55-9)			X	< .08	< 15.1						ug/l	ug/d			
9P. 4,4'-DDD (72-54-8)			X	< .08	< 15.1						ug/l	ug/d			
10P. Dieldrin (60-57-1)			X	< .08	< 15.1						ug/l	ug/d			
11P. α-Endosulfan (115-29-7)			X	< .05	< 9.5						ug/l	ug/d			
12P. β-Endosulfan (115-29-7)			X	< .08	< 15.1						ug/l	ug/d			
13P. Endosulfan Sulfate (1031-07-8)			X	< .09	< 17.0						ug/l	ug/d			
14P. Endrin (72-20-8)			X	< .06	< 11.4						ug/l	ug/d			
15P. Endrin Aldehyde (7421-93-4)			X	< .62	< 0.1						ug/l	mg/d			
16P. Heptachlor (76-44-8)			X	< .03	< 5.7						ug/l	ug/d			

CONTINUE ON PAGE V-9

EPA I.D. NUMBER (from Item 1 of Form 1) NM0890010515 | OUTFALL NUMBER 04A143

Form Approved
OMB No. 2040-0086
Approval expires 7-31-88

1. POLLUTANT AND CAS NUMBER (if available)	2. MARK 'X' a. TEST INC. ON OTHER LIC.	b. BELIEVED PRESENT	c. BELIEVED ABSENT	3. EFFLUENT a. MAXIMUM DAILY VALUE (1) CONCENTRATION	(2) MASS	b. MAXIMUM 30 DAY VALUE (1) CONCENTRATION	(2) MASS	c. LONG TERM AVRG. VALUE (1) CONCENTRATION	(2) MASS	d. NO. OF ANAL.	4. UNITS a. CONCENTRATION	b. MASS	5. INTAKE (optional) a. LONG TERM AVRG. VALUE (1) CONCENTRATION	(2) MASS	b. NO. OF ANAL.
GC/MS FRACTION – PESTICIDES *(continued)*															
17P. Heptachlor Epoxide (1024-57-3)			X	< .04	< 7.6						ug/l	ug/d			
18P. PCB-1242 (53469-21-9)			X	< .68	< 0.1						ug/l	mg/d			
19P. PCB-1254 (11097-69-1)			X	< .68	< 0.1						ug/l	mg/d			
20P. PCB-1221 (11104-28-2)			X												
21P. PCB-1232 (11141-16-5)			X												
22P. PCB-1248 (12672-29-6)			X												
23P. PCB-1260 (11096-82-5)			X	< .68	< 0.1						ug/l	mg/d			
24P. PCB-1016 (12674-11-2)			X												
25P. Toxaphene (8001-35-2)			X	< 2.5	< 0.5						ug/l	mg/d			

SCHEMATIC OF WATER FLOW
OUTFALL 04A143

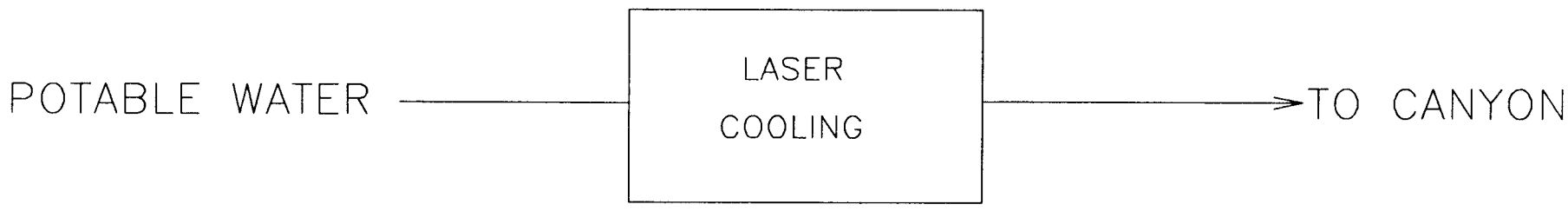

Please print or type in the unshaded areas only

EPA I.D. NUMBER NM0890010515

Approval Expires 7-31-8-

FORM 2C NPDES

EPA

U.S. ENVIRONMENTAL PROTECTION AGENCY
APPLICATION FOR PERMIT TO DISCHARGE WASTEWATER
EXISTING MANUFACTURING, COMMERCIAL, MINING AND SILVICULTURAL OPERATIONS
Consolidated Permits Program

I. OUTFALL LOCATION

For each outfall, list the latitude and longitude of its location to the nearest 15 seconds and the name of the receiving water.

A. OUTFALL NUMBER (list)	B. LATITUDE 1. DEG.	2. MIN.	3. SEC.	C. LONGITUDE 1. DEG.	2. MIN.	3. SEC.	D. RECEIVING WATER (name)
06A123	35	50	27	106	18	37	VALLE CANYON

II. FLOWS, SOURCES OF POLLUTION, AND TREATMENT TECHNOLOGIES

A. Attach a line drawing showing the water flow through the facility. Indicate sources of intake water, operations contributing wastewater to the effluent, and treatment units labeled to correspond to the more detailed descriptions in Item B. Construct a water balance on the line drawing by showing average flows between intakes, operations, treatment units, and outfalls. If a water balance cannot be determined (*e.g., for certain mining activities*), provide a pictorial description of the nature and amount of any sources of water and any collection or treatment measures.

B. For each outfall, provide a description of: (1) All operations contributing wastewater to the effluent, including process wastewater, sanitary wastewater, cooling water, and storm water runoff; (2) The average flow contributed by each operation; and (3) The treatment received by the wastewater. Continue on additional sheets if necessary.

1. OUTFALL NO. (list)	2. OPERATION(S) CONTRIBUTING FLOW a. OPERATION (list)	b. AVERAGE FLOW (include units)	3. TREATMENT a. DESCRIPTION	b. LIST CODES FROM TABLE 2C-1
123	TA 15-183 DARK ROOM PHOTO WASTE	39920 GPD	SILVER RECOVERY	2L

OFFICIAL USE ONLY (effluent guidelines sub-categories)

CONTINUED FROM THE FRONT

C. Except for storm runoff, leaks, or spills, are any of the discharges described in Items II-A or B intermittent or seasonal?

☐ YES *(complete the following table)* ☒ NO *(go to Section III)*

1. OUTFALL NUMBER *(list)*	2. OPERATION(s) CONTRIBUTING FLOW *(list)*	3. FREQUENCY		4. FLOW				
		a. DAYS PER WEEK *(specify average)*	b. MONTHS PER YEAR *(specify average)*	a. FLOW RATE *(in mgd)*		b. TOTAL VOLUME *(specify with units)*		c. DURATION *(in days)*
				1. LONG TERM AVERAGE	2. MAXIMUM DAILY	1. LONG TERM AVERAGE	2. MAXIMUM DAILY	

III. PRODUCTION

A. Does an effluent guideline limitation promulgated by EPA under Section 304 of the Clean Water Act apply to your facility?

☐ YES *(complete Item III-B)* ☒ NO *(go to Section IV)*

B. Are the limitations in the applicable effluent guideline expressed in terms of production *(or other measure of operation)*?

☐ YES *(complete Item III-C)* ☒ NO *(go to Section IV)*

C. If you answered "yes" to Item III-B, list the quantity which represents an actual measurement of your level of production, expressed in the terms and units used in the applicable effluent guideline, and indicate the affected outfalls.

1. AVERAGE DAILY PRODUCTION			2. AFFECTED OUTFALLS *(list outfall numbers)*
a. QUANTITY PER DAY	b. UNITS OF MEASURE	c. OPERATION, PRODUCT, MATERIAL, ETC. *(specify)*	
NA			

IV. IMPROVEMENTS

A. Are you now required by any Federal, State or local authority to meet any implementation schedule for the construction, upgrading or operation of wastewater treatment equipment or practices or any other environmental programs which may affect the discharges described in this application? This includes, but is not limited to, permit conditions, administrative or enforcement orders, enforcement compliance schedule letters, stipulations, court orders, and grant or loan conditions.

☐ YES *(complete the following table)* ☒ NO *(go to Item IV-B)*

1. IDENTIFICATION OF CONDITION, AGREEMENT, ETC.	2. AFFECTED OUTFALLS		3. BRIEF DESCRIPTION OF PROJECT	4. FINAL COMPLIANCE DATE	
	a. NO.	b. SOURCE OF DISCHARGE		a. REQUIRED	b. PROJECTED

B. OPTIONAL. You may attach additional sheets describing any additional water pollution control programs *(or other environmental projects which may affect your discharges)* you now have underway or which you plan. Indicate whether each program is now underway or planned, and indicate your actual or planned schedules for construction. ☐ MARK "X" IF DESCRIPTION OF ADDITIONAL CONTROL PROGRAMS IS ATTACHED

 CONTINUE ON PAGE 3

EPA I.D. NUMBER (copy from Item 1 of Form 1)
NM0890010515

Form Approved
OMB No. 2040-0086
Approval expires 7-31-85

V. INTAKE AND EFFLUENT CHARACTERISTICS

A, B, & C: See instructions before proceeding – Complete one set of tables for each outfall – Annotate the outfall number in the space provided.
NOTE: Tables V-A, V-B, and V-C are included on separate sheets numbered V-1 through V-9.

D. Use the space below to list any of the pollutants listed in Table 2c-3 of the instructions, which you know or have reason to believe is discharged or may be discharged from any outfall. For every pollutant you list, briefly describe the reasons you believe it to be present and report any analytical data in your possession.

1. POLLUTANT	2. SOURCE	1. POLLUTANT	2. SOURCE
NA			

VI. POTENTIAL DISCHARGES NOT COVERED BY ANALYSIS

Is any pollutant listed in Item V-C a substance or a component of a substance which you currently use or manufacture as an intermediate or final product or byproduct?

☐ YES (list all such pollutants below) ☒ NO (go to Item VI-B)

CONTINUED FROM THE FRONT

VII. BIOLOGICAL TOXICITY TESTING DATA

Do you have any knowledge or reason to believe that any biological test for acute or chronic toxicity has been made on any of your discharges or on a receiving water in relation to your discharge within the last 3 years?

___ YES *(identify the tests and describe their purposes below)* X NO *(go to Section VIII)*

VIII. CONTRACT ANALYSIS INFORMATION

Were any of the analyses reported in Item V performed by a contract laboratory or consulting firm?

___ YES *(list the name, address, and telephone number of, and pollutants analyzed by, each such laboratory or firm below)* X NO *(go to Section IX)*

A. NAME	B. ADDRESS	C. TELEPHONE (area code & no.)	D. POLLUTANTS ANALYZED

IX. CERTIFICATION

I certify under penalty of law that this document and all attachments were prepared under my direction or supervision in accordance with a system designed to assure that qualified personnel properly gather and evaluate the information submitted. Based on my inquiry of the person or persons who manage the system or those persons directly responsible for gathering the information, the information submitted is, to the best of my knowledge and belief, true, accurate, and complete. I am aware that there are significant penalties for submitting false information, including the possibility of fine and imprisonment for knowing violations.

A. NAME & OFFICIAL TITLE (type or print)	B. PHONE NO. (area code & no.)
JERRY L. BELLOWS, DOE AREA MANAGER	505-667-5105
ALLEN J. TIEDMAN, ASSOC. DIRECTOR FOR OPERATIONS	505-667-9390
C. SIGNATURE	D. DATE SIGNED

PLEASE PRINT OR TYPE IN THE UNSHADED AREAS ONLY. You may report some or all of this information on separate sheets *(use the same format)* instead of completing these pages. SEE INSTRUCTIONS.

EPA I.D. NUMBER *(copy from Item 1 of Form 1)*

NM0890010515

Form Approved.
OMB No. 2040-0086
Approval expires 7-31-88

V. INTAKE AND EFFLUENT CHARACTERISTICS *(continued from page 3 of Form 2-C)*

OUTFALL NO. 06A123

PART A - You must provide the results of at least one analysis for every pollutant in this table. Complete one table for each outfall. See instructions for additional details.

1. POLLUTANT	2. EFFLUENT a. MAXIMUM DAILY VALUE (1) CONCENTRATION	(2) MASS	b. MAXIMUM 30 DAY VALUE (if available) (1) CONCENTRATION	(2) MASS	c. LONG TERM AVRG. VALUE (if available) (1) CONCENTRATION	(2) MASS	d. NO. OF ANALYSES	3. UNITS (specify if blank) a. CONCENTRATION	b. MASS	4. INTAKE (optional) a. LONG TERM AVERAGE VALUE (1) CONCENTRATION	(2) MASS	b. NO. OF ANALYSES
a. Biochemical Oxygen Demand *(BOD)*	33.6	5.1						mg/l	kg/d			
b. Chemical Oxygen Demand *(COD)*	35.0	5.3						mg/l	kg/d			
c. Total Organic Carbon *(TOC)*	6.1	921.7						mg/l	g/d			
d. Total Suspended Solids *(TSS)*	< 1.0	< 151.1						mg/l	g/d			
e. Ammonia *(as N)*	7.5	1.1						mg/l	kg/d			
f. Flow	VALUE 39920		VALUE		VALUE			gal/day	of photo rinse water	VALUE		
g. Temperature *(winter)*	VALUE 2.31		VALUE		VALUE			°C		VALUE		
h. Temperature *(summer)*	VALUE NA		VALUE		VALUE			°C		VALUE		
i. pH	MINIMUM 7.0	MAXIMUM 8.9	MINIMUM	MAXIMUM				STANDARD UNITS				

PART B - Mark "X" in column 2-a for each pollutant you know or have reason to believe is present. Mark "X" in column 2-b for each pollutant you believe to be absent. If you mark column 2a for any pollutant which is limited either directly, or indirectly but expressly, in an effluent limitations guideline, you must provide the results of at least one analysis for that pollutant. For other pollutants for which you mark column 2a, you must provide quantitative data or an explanation of their presence in your discharge. Complete one table for each outfall. See the instructions for additional details and requirements.

1. POLLUTANT AND CAS NO. *(if available)*	2. MARK "X" a. BELIEVED PRESENT	b. BELIEVED ABSENT	3. EFFLUENT a. MAXIMUM DAILY VALUE (1) CONCENTRATION	(2) MASS	b. MAXIMUM 30 DAY VALUE (if available) (1) CONCENTRATION	(2) MASS	c. LONG TERM AVRG. VALUE (if available) (1) CONCENTRATION	(2) MASS	d. NO. OF ANALYSES	4. UNITS a. CONCENTRATION	b. MASS	5. INTAKE (optional) a. LONG TERM AVERAGE VALUE (1) CONCENTRATION	(2) MASS	b. NO. OF ANALYSES
a. Bromide (24959-67-9)	X		3.1	468.4						mg/l	g/d			
b. Chlorine, Total Residual		X	0.0							mg/l	mg/d			
c. Color	X		10							units				
d. Fecal Coliform		X												
e. Fluoride (16984-48-8)	X		.30	45.3						mg/l	g/d			
f. Nitrate--Nitrite *(as N)*	X		.357	53.9						mg/l	g/d			

CONTINUE ON REVERSE

ITEM V-B CONTINUED FROM FRONT

1. POLLUTANT AND CAS NO. (if available)	2. MARK 'X' a. BELIEVED PRESENT	b. BELIEVED ABSENT	3. EFFLUENT a. MAXIMUM DAILY VALUE (a) CONCENTRATION	(b) MASS	b. MAXIMUM 30 DAY VALUE (if available) (a) CONCENTRATION	(b) MASS	c. LONG TERM AVRG. VALUE (if available) (a) CONCENTRATION	(b) MASS	d. NO. OF ANALYSES	4. UNITS a. CONCENTRATION	b. MASS	5. INTAKE (optional) a. LONG TERM AVERAGE VALUE (a) CONCENTRATION	(b) MASS	b. NO. OF ANALYSES
g. Nitrogen, Total Organic (as N)	X		15.6	2.4						mg/l	kg/d			
h. Oil and Grease	X		4.22	637.6						mg/l	g/d			
i. Phosphorus (as P), Total (7723-14-0)	X		.156	23.6						mg/l	g/d			
j. Radioactivity														
(1) Alpha, Total	X		.5	75.5						pCi/l	nCi/d			
(2) Beta, Total	X		6.7	1.0						pCi/l	uCi/d			
(3) Radium, Total	X													
(4) Radium 226, Total	X		.05	7.6						pCi/l	uCi/d			
k. Sulfate (as SO_4) (14808-79-8)	X		77.3	11.7						mg/l	kg/d			
l. Sulfide (as S)		X	< .05	< 7.6						mg/l	g/d			
m. Sulfite (as SO_3) (14265-45-3)	X		13.1	2.0						mg/l	kg/d			
n. Surfactants		X	< .1	< 15.1						mg/l	g/d			
o. Aluminum, Total (7429-90-5)	X		.56	84.6						mg/l	g/d			
p. Barium, Total (7440-39-3)	X		.03	4.5						mg/l	g/d			
q. Boron, Total (7440-42-8)	X		.52	78.6						mg/l	g/d			
r. Cobalt, Total (7440-48-4)		X	< .1	< 15.1						mg/l	g/d			
s. Iron, Total (7439-89-6)	X		.74	111.8						mg/l	g/d			
t. Magnesium, Total (7439-95-4)	X		3.3	498.6						mg/l	g/d			
u. Molybdenum, Total (7439-98-7)		X	< .02	< 3.0						mg/l	g/d			
v. Manganese, Total (7439-96-5)	X		.01	1.5						mg/l	g/d			
w. Tin, Total (7440-31-5)		X	< .050	< 7.6						mg/l	g/d			
x. Titanium, Total (7440-32-6)		X	< .004	< 604.4						mg/l	mg/d			

CONTINUE ON PAGE V-3

EPA I.D. NUMBER (copy from Item 1 of Form 1)	OUTFALL NUMBER
NM0890010515	06A123

Form Approved.
OMB No. 2040-0086
Approval expires 7-31-88

CONTINUED FROM PAGE 3 OF FORM 2-C

PART C - If you are a primary industry and this outfall contains process wastewater, refer to Table 2c-2 in the instructions to determine which of the GC/MS fractions you must test for. Mark "X" in column 2-a for all such GC/MS fractions that apply to your industry and for ALL toxic metals, cyanides, and total phenols. If you are not required to mark column 2-a *(secondary industries, nonprocess wastewater outfalls, and nonrequired GC/MS fractions)*, mark "X" in column 2-b for each pollutant you know or have reason to believe is present. Mark "X" in column 2-c for each pollutant you believe is absent. If you mark column 2a for any pollutant, you must provide the results of at least one analysis for that pollutant. If you mark column 2b for any pollutant, you must provide the results of at least one analysis for that pollutant if you know or have reason to believe it will be discharged in concentrations of 10 ppb or greater. If you mark column 2b for acrolein, acrylonitrile, 2,4 dinitrophenol, or 2-methyl-4, 6 dinitrophenol, you must provide the results of at least one analysis for each of these pollutants which you know or have reason to believe that you discharge in concentrations of 100 ppb or greater. Otherwise, for pollutants for which you mark column 2b, you must either submit at least one analysis or briefly describe the reasons the pollutant is expected to be discharged. Note that there are 7 pages to this part; please review each carefully. Complete one table *(all 7 pages)* for each outfall. See instructions for additional details and requirements.

1. POLLUTANT AND CAS NUMBER (if available)	2. MARK 'X'			3. EFFLUENT							4. UNITS		5. INTAKE (optional)		
	a. TESTING REQUIRED	b. BELIEVED PRESENT	c. BELIEVED ABSENT	a. MAXIMUM DAILY VALUE (1) CONCENTRATION	a. MAXIMUM DAILY VALUE (2) MASS	b. MAXIMUM 30 DAY VALUE (if available) (1) CONCENTRATION	b. MAXIMUM 30 DAY VALUE (if available) (2) MASS	c. LONG TERM AVRG. VALUE (if available) (1) CONCENTRATION	c. LONG TERM AVRG. VALUE (if available) (2) MASS	d. NO. OF ANALYSES	a. CONCENTRATION	b. MASS	a. LONG TERM AVERAGE VALUE (1) CONCENTRATION	a. LONG TERM AVERAGE VALUE (2) MASS	b. NO. OF ANALYSES
METALS, CYANIDE, AND TOTAL PHENOLS															
1M. Antimony, Total (7440-36-0)			X	< .050	< 7.6						mg/l	g/d			
2M. Arsenic, Total (7440-38-2)			X	< .002	< 302.2						mg/l	mg/d			
3M. Beryllium, Total, 7440-41-7)			X	< .001	< 151.1						mg/l	mg/d			
4M. Cadmium, Total (7440-43-9)			X	< .010	< 1.5						mg/l	g/d			
5M. Chromium, Total (7440-47-3)		X		.087	13.1						mg/l	g/d			
6M. Copper, Total (7440-50-8)		X		.052	7.9						mg/l	g/d			
7M. Lead, Total (7439-92-1)			X	< .050	< 7.6						mg/l	g/d			
8M. Mercury, Total (7439-97-6)			X	< .0002	< 30.2						mg/l	mg/d			
9M. Nickel, Total (7440-02-0)		X		.16	24.2						mg/l	g/d			
10M. Selenium, Total (7782-49-2)		X		.001	151.1						mg/l	mg/d			
11M. Silver, Total (7440-22-4)		X		.472	71.3						mg/l	g/d			
12M. Thallium, Total (7440-28-0)		X		1.0	151.1						mg/l	g/d			
13M. Zinc, Total (7440-66-6)		X		.045	6.8						mg/l	g/d			
14M. Cyanide, Total (57-12-5)			X	< .01	< 1.5						mg/l	g/d			
15M. Phenols, Total			X	< .01	< 1.5						mg/l	g/d			
DIOXIN															
2,3,7,8 Tetra chlorodibenzo P Dioxin (1764-01-6)			X	DESCRIBE RESULTS											

CONTINUE ON REVERSE

1. POLLUTANT AND CAS NUMBER (if available)	2. MARK "X" a. TESTING REQUIRED	b. BELIEVED PRESENT	c. BELIEVED ABSENT	3. EFFLUENT a. MAXIMUM DAILY VALUE (1) CONCENTRATION	(2) MASS	b. MAXIMUM 30 DAY VALUE (if available) (1) CONCENTRATION	(2) MASS	c. LONG TERM AVRG. VALUE (if available) (1) CONCENTRATION	(2) MASS	d. NO. OF ANALYSES	4. UNITS a. CONCENTRATION	b. MASS	5. INTAKE (optional) a. LONG TERM AVERAGE VALUE (1) CONCENTRATION	(2) MASS	b. NO. OF ANALYSES
GC/MS FRACTION – VOLATILE COMPOUNDS															
1V. Acrolein (107-02-8)			X												
2V. Acrylonitrile (107-13-1)			X												
3V. Benzene (71-43-2)			X	< .005	< 755.5						mg/l	mg/d			
4V. Bis (Chloromethyl) Ether (542-88-1)			X												
5V. Bromoform (75-25-2)			X	< .005	< 755.5						mg/l	mg/d			
6V. Carbon Tetrachloride (56-23-5)			X	< .005	< 755.5						mg/l	mg/d			
7V. Chlorobenzene (108-90-7)			X	< .005	< 755.5						mg/l	mg/d			
8V. Chlorodibromomethane (124-48-1)			X	< .005	< 755.5						mg/l	mg/d			
9V. Chloroethane (75-00-3)			X	< .010	< 1.511						mg/l	g/d			
10V. 2-Chloroethylvinyl Ether (110-75-8)			X												
11V. Chloroform (67-66-3)			X	< .005	< 755.5						mg/l	mg/d			
12V. Dichlorobromomethane (75-27-4)			X	< .005	< 755.5						mg/l	mg/d			
13V. Dichlorodifluoromethane (75-71-8)			X												
14V. 1,1-Dichloroethane (75-34-3)			X	< .005	< 755.5						mg/l	mg/d			
15V. 1,2-Dichloroethane (107-06-2)			X	< .005	< 755.5						mg/l	mg/d			
16V. 1,1-Dichloroethylene (75-35-4)			X	< .005	< 755.5						mg/l	mg/d			
17V. 1,2-Dichloropropane (78-87-5)			X	< .005	< 755.5						mg/l	mg/d			
18V. 1,3-Dichloropropylene (542-75-6)			X												
19V. Ethylbenzene (100-41-4)			X	< .005	< 755.5						mg/l	mg/d			
20V. Methyl Bromide (74-83-9)			X	< .010	< 1.511						mg/l	g/d			
21V. Methyl Chloride (74-87-3)			X	< .010	< 1.511						mg/l	g/d			

CONTINUE ON PAGE V-5

CONTINUED FROM PAGE V-4

EPA I.D. NUMBER (copy from Item 1 of Form 1): NM0890010515

OUTFALL NUMBER: 06A123

Form Approved
OMB No. 2040-0086
Approval expires 7-31-88

1. POLLUTANT AND CAS NUMBER (if available)	2. MARK 'X' a. TESTING REQUIRED	b. BELIEVED PRESENT	c. BELIEVED ABSENT	3. EFFLUENT a. MAXIMUM DAILY VALUE (1) CONCENTRATION	(2) MASS	b. MAXIMUM 30 DAY VALUE (if available) (1) CONCENTRATION	(2) MASS	c. LONG TERM AVRG. VALUE (if available) (1) CONCENTRATION	(2) MASS	d. NO. OF ANALYSES	4. UNITS a. CONCENTRATION	b. MASS	5. INTAKE (optional) a. LONG TERM AVERAGE VALUE (1) CONCENTRATION	(2) MASS	b. NO. OF ANALYSES
GC/MS FRACTION – VOLATILE COMPOUNDS *(continued)*															
22V. Methylene Chloride (75-09-2)			X	< .005	< 755.5						mg/l	mg/d			
23V. 1,1,2,2-Tetrachloroethane (79-34-5)			X	< .005	< 755.5						mg/l	mg/d			
24V. Tetrachloroethylene (127-18-4)			X	< .005	< 755.5						mg/l	mg/d			
25V. Toluene (108-88-3)			X	< .005	< 755.5						mg/l	mg/d			
26V. 1,2-Trans-Dichloroethylene (156-60-5)			X	< .005	< 755.5						mg/l	mg/d			
27V. 1,1,1-Trichloroethane (71-55-6)			X	< .005	< 755.5						mg/l	mg/d			
28V. 1,1,2-Trichloroethane (79-00-5)			X	< .005	< 755.5						mg/l	mg/d			
29V. Trichloroethylene (79-01-6)			X	< .005	< 755.5						mg/l	mg/d			
30V. Trichlorofluoromethane (75-69-4)			X	< .005	< 755.5						mg/l	mg/d			
31V. Vinyl Chloride (75-01-4)			X	< .010	< 1.511						mg/l	g/d			
GC/MS FRACTION – ACID COMPOUNDS															
1A. 2-Chlorophenol (95-57-8)			X	< .010	< 1.511						mg/l	g/d			
2A. 2,4-Dichlorophenol (120-83-2)			X	< .010	< 1.511						mg/l	g/d			
3A. 2,4-Dimethylphenol (105-67-9)			X	< .010	< 1.511						mg/l	g/d			
4A. 4,6-Dinitro-O-Cresol (534-52-1)			X	< .010	< 1.511						mg/l	g/d			
5A. 2,4-Dinitrophenol (51-28-5)			X	< .010	< 1.511						mg/l	g/d			
6A. 2-Nitrophenol (88-75-5)			X	< .010	< 1.511						mg/l	g/d			
7A. 4-Nitrophenol (100-02-7)			X	< .010	< 1.511						mg/l	g/d			
8A. P-Chloro-M-Cresol (59-50-7)			X	< .010	< 1.511						mg/l	g/d			
9A. Pentachlorophenol (87-86-5)			X	< .010	< 1.511						mg/l	g/d			
10A. Phenol (108-95-2)			X	< .010	< 1.511						mg/l	g/d			
11A. 2,4,6-Trichlorophenol (88-06-2)			X	< .010	< 1.511						mg/l	g/d			

CONTINUED FROM THE FRONT

1. POLLUTANT AND CAS NUMBER (if available)	2. MARK "X" a. TESTING REQUIRED	b. BELIEVED PRESENT	c. BELIEVED ABSENT	3. EFFLUENT a. MAXIMUM DAILY VALUE (1) CONCENTRATION	(2) MASS	b. MAXIMUM 30 DAY VALUE (if available) (1) CONCENTRATION	(2) MASS	c. LONG TERM AVRG. VALUE (if available) (1) CONCENTRATION	(2) MASS	d. NO. OF ANALYSES	4. UNITS a. CONCENTRATION	b. MASS	5. INTAKE (optional) a. LONG TERM AVERAGE VALUE (1) CONCENTRATION	(2) MASS	b. NO. OF ANALYSES
GC/MS FRACTION – BASE/NEUTRAL COMPOUNDS															
1B. Acenaphthene (83-32-9)			X	< .010	< 1.511						mg/l	g/d			
2B. Acenaphtylene (208-96-8)			X	< .010	< 1.511						mg/l	g/d			
3B. Anthracene (120-12-7)			X	< .010	< 1.511						mg/l	g/d			
4B. Benzidine (92-87-5)			X	< .010	< 1.511						mg/l	g/d			
5B. Benzo *(a)* Anthracene (56-55-3)			X	< .010	< 1.511						mg/l	g/d			
6B. Benzo *(a)* Pyrene (50-32-8)			X	< .010	< 1.511						mg/l	g/d			
7B. 3,4-Benzo-fluoranthene (205-99-2)			X	< .010	< 1.511						mg/l	g/d			
8B. Benzo *(ghi)* Perylene (191-24-2)			X	< .010	< 1.511						mg/l	g/d			
9B. Benzo *(k)* Fluoranthene (207-08-9)			X	< .010	< 1.511						mg/l	g/d			
10B. Bis *(2-Chloro-ethoxy)* Methane (111-91-1)			X	< .010	< 1.511						mg/l	g/d			
11B. Bis *(2-Chloro-ethyl)* Ether (111-44-4)			X	< .010	< 1.511						mg/l	g/d			
12B. Bis *(2-Chloroiso-propyl)* Ether (102-60-1)			X	< .010	< 1.511						mg/l	g/d			
13B. Bis *(2-Ethyl-hexyl)* Phthalate (117-81-7)			X	< .010	< 1.511						mg/l	g/d			
14B. 4-Bromo-phenyl Phenyl Ether (101-55-3)			X	< .010	< 1.511						mg/l	g/d			
15B. Butyl Benzyl Phthalate (85-68-7)			X	< .010	< 1.511						mg/l	g/d			
16B. 2-Chloro-naphthalene (91-58-7)			X	< .010	< 1.511						mg/l	g/d			
17B. 4-Chloro-phenyl Phenyl Ether (7005-72-3)			X	< .010	< 1.511						mg/l	g/d			
18B. Chrysene (218-01-9)			X	< .010	< 1.511						mg/l	g/d			
19B. Dibenzo *(a,h)* Anthracene (53-70-3)			X	< .010	< 1.511						mg/l	g/d			
20B. 1,2-Dichloro-benzene (95-50-1)			X	< .010	< 1.511						mg/l	g/d			
21B. 1,3-Dichloro-benzene (541-73-1)			X	< .010	< 1.511						mg/l	g/d			

CONTINUE ON PAGE V-7

EPA I.D. NUMBER (copy from Item I of Form 1): NM0890010515 | OUTFALL NUMBER: 06A123

Form 2C, Rev. 2-85
OMB No. 2040-0086
Approval expires 7-31-88

1. POLLUTANT AND CAS NUMBER (if available)	2. MARK "X" a. TESTING REQUIRED	b. BELIEVED PRESENT	c. BELIEVED ABSENT	3. EFFLUENT a. MAXIMUM DAILY VALUE (1) CONCENTRATION	(2) MASS	b. MAXIMUM 30 DAY VALUE (if available) (1) CONCENTRATION	(2) MASS	c. LONG TERM AVRG. VALUE (if available) (1) CONCENTRATION	(2) MASS	d. NO. OF ANALYSES	4. UNITS a. CONCENTRATION	b. MASS	5. INTAKE (optional) a. LONG TERM AVERAGE VALUE (1) CONCENTRATION	(2) MASS	b. NO. OF ANALYSES
GC/MS FRACTION – BASE/NEUTRAL COMPOUNDS *(continued)*															
22B. 1,4-Dichlorobenzene (106-46-7)			X	< .010	< 1.511						mg/l	g/d			
23B. 3,3'-Dichlorobenzidine (91-94-1)			X	< .010	< 1.511						mg/l	g/d			
24B. Diethyl Phthalate (84-66-2)			X	< .010	< 1.511						mg/l	g/d			
25B. Dimethyl Phthalate (131-11-3)			X	< .010	< 1.511						mg/l	g/d			
26B. Di-N-Butyl Phthalate (84-74-2)			X	< .010	< 1.511						mg/l	g/d			
27B. 2,4-Dinitrotoluene (121-14-2)			X	< .010	< 1.511						mg/l	g/d			
28B. 2,6-Dinitrotoluene (606-20-2)			X	< .010	< 1.511						mg/l	g/d			
29B. Di-N-Octyl Phthalate (117-84-0)			X	< .010	< 1.511						mg/l	g/d			
30B. 1,2-Diphenylhydrazine *(as Azobenzene)* (122-66-7)			X	< .010	< 1.511						mg/l	g/d			
31B. Fluoranthene (206-44-0)			X	< .010	< 1.511						mg/l	g/d			
32B. Fluorene (86-73-7)		X		.28	42.31						ug/l	mg/d			
33B. Hexachlorobenzene (118-74-1)			X	< .010	< 1.511						mg/l	g/d			
34B. Hexachlorobutadiene (87-68-3)			X	< .010	< 1.511						mg/l	g/d			
35B. Hexachlorocyclopentadiene (77-47-4)			X	< .010	< 1.511						mg/l	g/d			
36B. Hexachloroethane (67-72-1)			X	< .010	< 1.511						mg/l	g/d			
37B. Indeno *(1,2,3-cd)* Pyrene (193-39-5)			X	< .010	< 1.511						mg/l	g/d			
38B. Isophorone (78-59-1)			X	< .010	< 1.511						mg/l	g/d			
39B. Naphthalene (91-20-3)			X	< .010	< 1.511						mg/l	g/d			
40B. Nitrobenzene (98-95-3)			X	< .010	< 1.511						mg/l	g/d			
41B. N-Nitrosodimethylamine (62-75-9)			X	< .010	< 1.511						mg/l	g/d			
42B. N-Nitrosodi-N-Propylamine (621-64-7)			X	< .010	< 1.511						mg/l	g/d			

CONTINUED FROM THE FRONT

1. POLLUTANT AND CAS NUMBER (if available)	2. MARK "X" a. TESTING REQUIRED	b. BELIEVED PRESENT	c. BELIEVED ABSENT	3. EFFLUENT a. MAXIMUM DAILY VALUE (1) CONCENTRATION	(2) MASS	b. MAXIMUM 30 DAY VALUE (if available) (1) CONCENTRATION	(2) MASS	c. LONG TERM AVRG. VALUE (if available) (1) CONCENTRATION	(2) MASS	d. NO. OF ANALYSES	4. UNITS a. CONCENTRATION	b. MASS	5. INTAKE (optional) a. LONG TERM AVERAGE VALUE (1) CONCENTRATION	(2) MASS	b. NO. OF ANALYSES
GC/MS FRACTION – BASE/NEUTRAL COMPOUNDS *(continued)*															
43B. N-Nitrosodiphenylamine (86-30-6)			X	< .010	< 1.511						mg/l	g/d			
44B. Phenanthrene (85-01-8)			X	< .010	< 1.511						mg/l	g/d			
45B. Pyrene (129-00-0)			X	< .010	< 1.511						mg/l	g/d			
46B. 1,2,4 - Trichlorobenzene (120-82-1)			X	< .010	< 1.511						mg/l	g/d			
GC/MS FRACTION – PESTICIDES															
1P. Aldrin (309-00-2)			X	< .06	< 9.066						ug/l	mg/d			
2P. α-BHC (319-84-6)			X	< .04	< 6.044						ug/l	mg/d			
3P. β-BHC (319-85-7)			X	< .1	< 15.1						ug/l	mg/d			
4P. γ-BHC (58-89-9)			X	< .06	< 9.066						ug/l	mg/d			
5P. δ-BHC (319-86-8)			X	< .12	< 18.1						ug/l	mg/d			
6P. Chlordane (57-74-9)			X	< .25	< 37.8						ug/l	mg/d			
7P. 4,4'-DDT (50-29-3)			X	< .06	< 9.066						ug/l	mg/d			
8P. 4,4'-DDE (72-55-9)			X	< .08	< 12.1						ug/l	mg/d			
9P. 4,4'-DDD (72-54-8)			X	< .08	< 12.1						ug/l	mg/d			
10P. Dieldrin (60-57-1)			X	< .08	< 12.1						ug/l	mg/d			
11P. α-Endosulfan (115-29-7)			X	< .05	< 7.555						ug/l	mg/d			
12P. β-Endosulfan (115-29-7)			X	< .08	< 12.1						ug/l	mg/d			
13P. Endosulfan Sulfate (1031-07-8)			X	< .09	< 13.6						ug/l	mg/d			
14P. Endrin (72-20-8)			X	< .06	< 9.066						ug/l	mg/d			
15P. Endrin Aldehyde (7421-93-4)			X	< .31	< 46.8						ug/l	mg/d			
16P. Heptachlor (76-44-8)			X	< .06	< 9.066						ug/l	mg/d			

CONTINUE ON PAGE V-9

CONTINUED FROM PAGE V-8

FACILITY NUMBER (copy from Form 1, Item I)	OUTFALL NUMBER
NM0890010515	06A123

Form Approved
OMB No. 2040-0086
Approval expires 7-31-88

1. POLLUTANT AND CAS NUMBER (if available)	2. MARK 'X' a. TOXIC POLLUTANT	b. PRESENT	c. BELIEVED ABSENT	3. EFFLUENT a. MAXIMUM DAILY VALUE (1) CONCENTRATION	(2) MASS	b. MAXIMUM 30 DAY VALUE (optional) (1) CONCENTRATION	(2) MASS	c. LONG TERM AVG. VALUE (optional) (1) CONCENTRATION	(2) MASS	d. NO. OF ANAL.	4. UNITS a. CONCENTRATION	b. MASS	5. INTAKE (optional) a. LONG TERM AVG. VALUE (1) CONCENTRATION	(2) MASS	b. NO. OF ANAL.
GC/MS FRACTION – PESTICIDES *(continued)*															
17P. Heptachlor Epoxide (1024-57-3)			X	< .08	< 12.1						ug/l	mg/d			
18P. PCB-1242 (53469-21-9)			X	< .78	< 117.9						ug/l	mg/d			
19P. PCB-1254 (11097-69-1)			X	< .78	< 117.9						ug/l	mg/d			
20P. PCB-1221 (11104-28-2)			X												
21P. PCB-1232 (11141-16-5)			X												
22P. PCB-1248 (12672-29-6)			X												
23P. PCB-1260 (11096-82-5)			X	< .78	< 117.9						ug/l	mg/d			
24P. PCB-1016 (12674-11-2)			X												
25P. Toxaphene (8001-35-2)			X	< 2.5	< 377.7						ug/l	mg/d			

SCHEMATIC OF WATER FLOW
OUTFALL 06A123

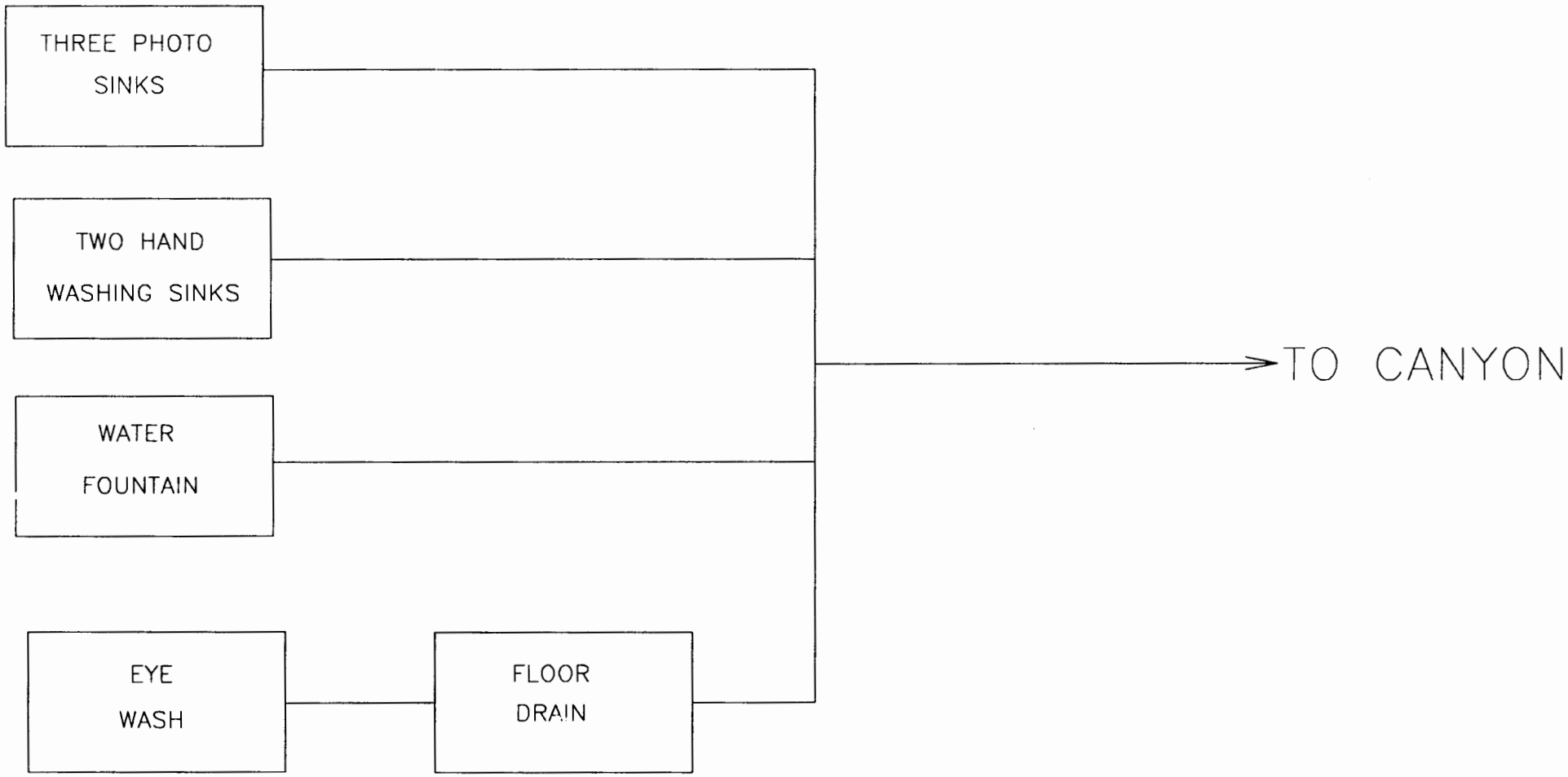

4 UNCLASSIFIED | 3 UNCLASSIFIED | 2 UNCLASSIFIED | 1 UNCLASSIFIED

DYE TESTED XX-XX

PART OR CONTROL NUMBER	REVISIONS		
	ISS	CLASS REVIEW	DESCRIPTION
N/A	A		DRAWN BY - GARCIA 8-8-91 CHECKER - PALMER 8-8-91 ENGINEER - PALMER 8-8-91 APPROVED - BARR 8-8-91

TA-15-194
INDEX SHEET

13Y-192156 SHT 1----SITE DRAINAGE PLAN
13Y-192156 SHT 2----PLUMBING AND DRAIN PLAN
13Y-192156 SHT 3----ROOF DRAIN PLAN
13Y-192156 SHT 4----POTENTIAL EFFLUENT
13Y-192156 SHT 5----ELECTRICAL HAZARD ZONES
13Y-192156 SHT 6----EVACUATION PLAN

PART CODE	LOS ALAMOS NATIONAL LABORATORY	
SHEET 0 / ISSUE A	TITLE (UNCL TITLE CLASSIFICATION) INDEX SHEET TA-15-194	
PART CLASSIFICATION UNCLASSIFIED		
ENGLISH (FT/IN)	DRAWING CLASSIFICATION UNCLASSIFIED	SIZE D / DRAWING NUMBER 13Y-192156
THIRD ANGLE PROJECTION	09-26-91 11:22	PSCN 89516 / SCALE 1/1 / SHEET 0 OF
STATUS		ORIGIN LA-ICEMPLUS-V2.03

4 UNCLASSIFIED | 3 UNCLASSIFIED | 2 UNCLASSIFIED | 1 UNCLASSIFIED

4 UNCLASSIFIED | 3 UNCLASSIFIED | 2 UNCLASSIFIED | 1 UNCLASSIFIED

PART OR CONTROL NUMBER	ISS	CLASS REVIEW	REVISIONS DESCRIPTION		
N/A	A		DRAWN BY	- GARCIA	8-9-91
			CHECKER	- PALMER	8-9-91
			ENGINEER	- PALMER	8-9-91
			APPROVED	- BARR	8-9-91

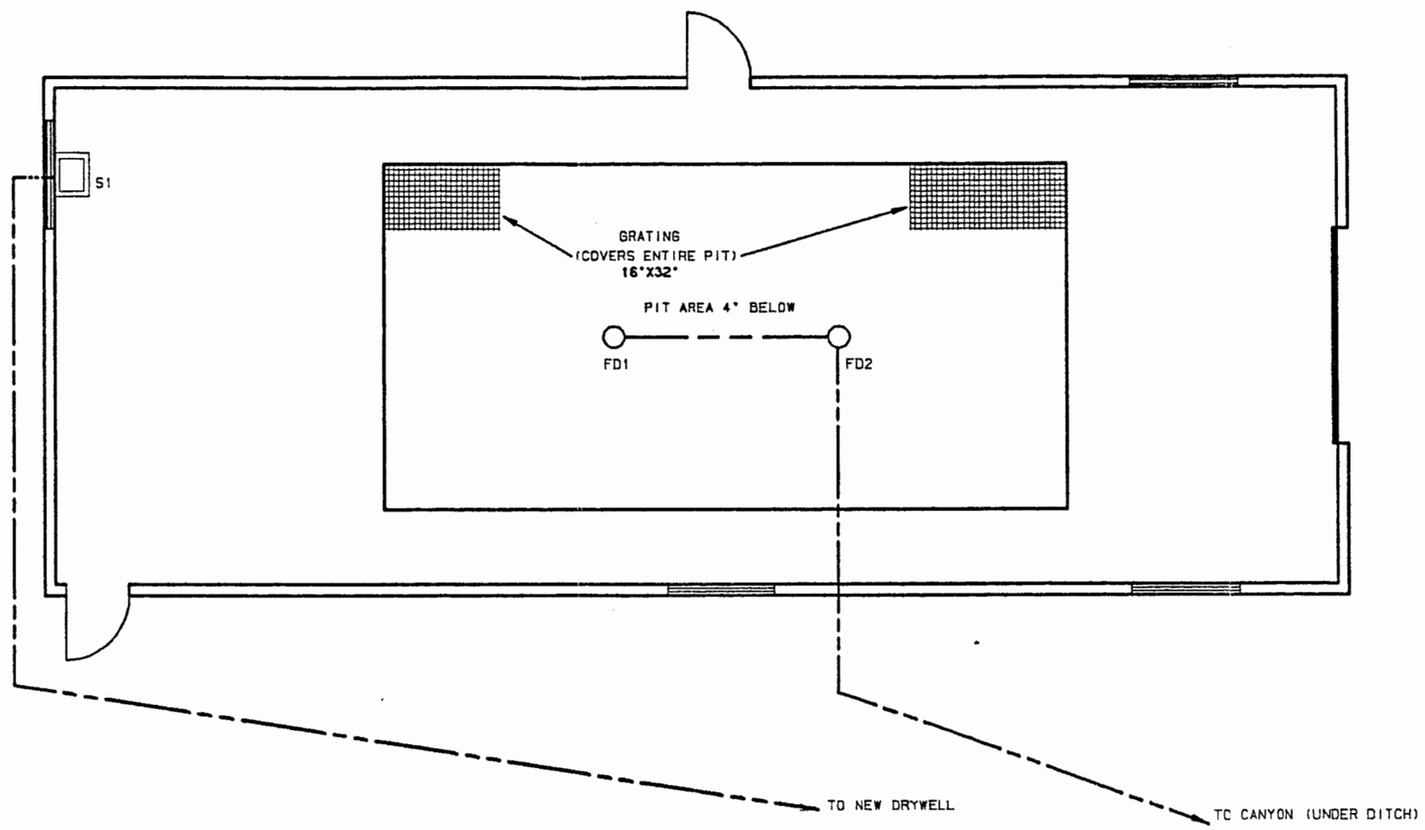

LEGEND

S# ----SINK
FD# ----FLOOR DRAIN

PART CODE	LOS ALAMOS NATIONAL LABORATORY		
SHEET 2 / ISSUE A	TITLE (UNC) TITLE CLASSIFICATION: PLUMBING AND DRAIN PLAN TA-15-194		
PART CLASSIFICATION: UNCLASSIFIED			
ENGLISH (FT/IN)	DRAWING CLASSIFICATION: UNCLASSIFIED	SIZE D	DRAWING NUMBER 13Y-192156
THIRD ANGLE PROJECTION	8-26-91 11:26	FSCM 88516	SCALE / SHEET 2 OF
STATUS		ORIGIN LA-ICEMPLUS-V2.03	

4 UNCLASSIFIED | 3 UNCLASSIFIED | 2 UNCLASSIFIED | 1 UNCLASSIFIED

UNCLASSIFIED

N/A	A	DRAWN BY - GARCIA	8-9-91
		CHECKER - PALMER	8-9-91
		ENGINEER - PALMER	8-9-91
		APPROVED - BARR	8-9-91

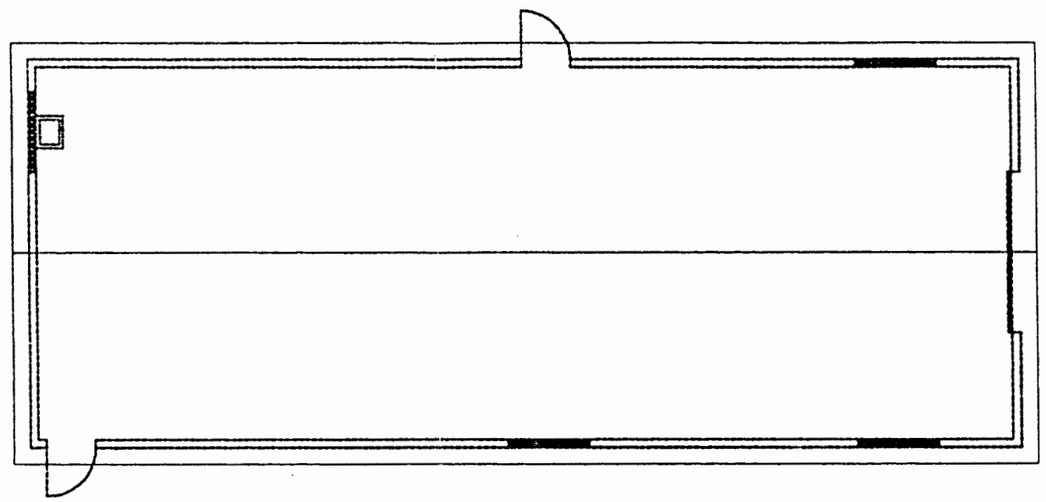

NOTE: THERE ARE NOT ANY ROOF DRAINS

LOS ALAMOS NATIONAL LABORATORY

SHEET 3
ISSUE A

TITLE (UNCLASSIFIED)
ROOF DRAIN PLAN
TA-15-194

PART CLASSIFICATION
UNCLASSIFIED

ENGLISH (FT/IN)

DRAWING CLASSIFICATION
UNCLASSIFIED

SIZE E

DRAWING NUMBER
13Y-192156

SCALE

SHEET 3 OF

SYSTEM LA-ICEMPLUS-V2.03

13Y-192156

UNCLASSIFIED

4 UNCLASSIFIED | 3 UNCLASSIFIED | 2 UNCLASSIFIED | 1 UNCLASSIFIED

DYE TESTED XX-XX

PART OR CONTROL NUMBER	REVISIONS		
	ISS	CLASS REVIEW	DESCRIPTION
N/A	A		DRAWN BY - LAUER CHECKER - ENGINEER - APPROVED -

TA-15-202
INDEX SHEET

13Y-192XXX SHT 1----SITE DRAINAGE PLAN
13Y-192151 SHT 1----PLUMBING AND DRAIN PLAN
12Y-192151 SHT 2----POTENTIAL EFFLUENT

PART CODE	LOS ALAMOS NATIONAL LABORATORY
SHEET 0 / ISSUE A	TITLE (UNC) TITLE CLASSIFICATION: INDEX SHEET TA-15-202
PART CLASSIFICATION	UNCLASSIFIED
ENGLISH (FT/IN)	DRAWING CLASSIFICATION: UNCLASSIFIED; SIZE D; DRAWING NUMBER 13Y-192151
THIRD ANGLE PROJECTION	-25-91 15:06; FSCM 88516; SCALE 1:1; SHEET 0 OF
STATUS	ORIGIN LA-ICEMPLUS-V2.03

4 UNCLASSIFIED | 3 UNCLASSIFIED | 2 UNCLASSIFIED | 1 UNCLASSIFIED

4 UNCLASSIFIED | 3 UNCLASSIFIED | 2 UNCLASSIFIED | 1 UNCLASSIFIED

PART OR CONTROL NUMBER	REVISIONS		
	ISS	CLASS REVIEW	DESCRIPTION
N/A	A		DRAWN BY - LAUER CHECKER - ENGINEER - APPROVED -

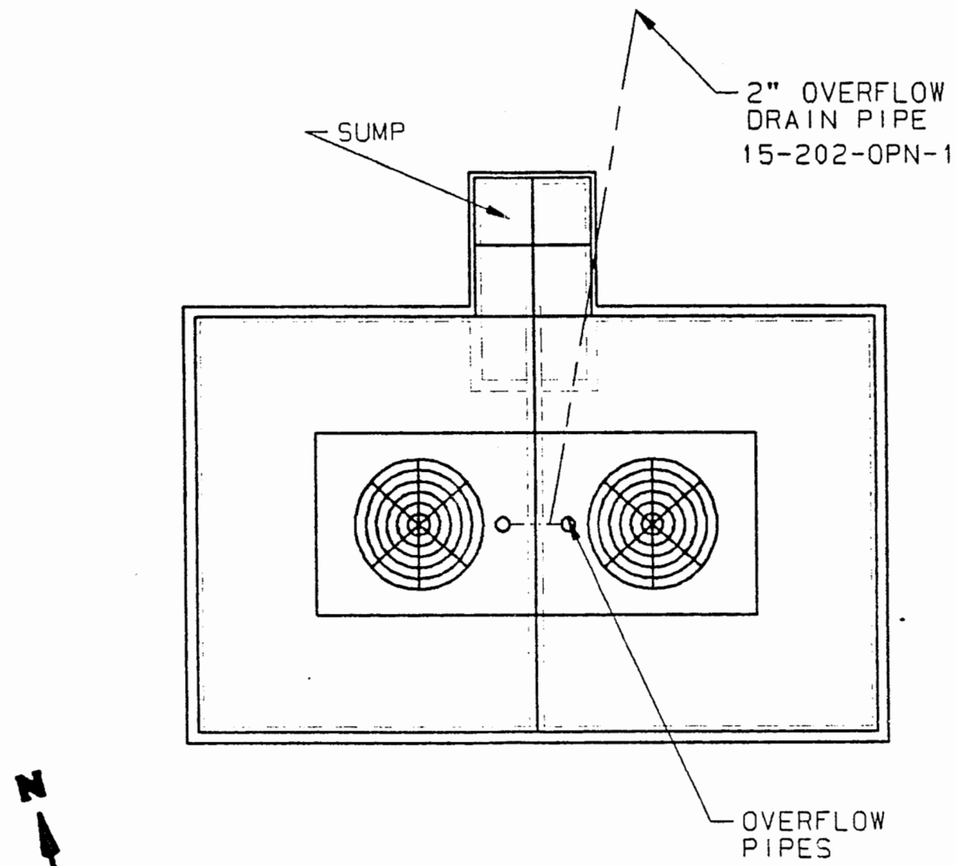

PART CODE	LOS ALAMOS NATIONAL LABORATORY
SHEET 1 / ISSUE A	TITLE (UNCL TITLE CLASSIFICATION) PLUMBING AND DRAIN PLAN TA-15-202
PART CLASSIFICATION	UNCLASSIFIED
ENGLISH (FT/IN)	DRAWING CLASSIFICATION UNCLASSIFIED
SIZE 0	DRAWING NUMBER 13Y-192151
THIRD ANGLE PROJECTION	FSCM 89516 SCALE SHEET 1 OF
STATUS	ORIGIN LA-ICEMPLUS-V2.03

4 UNCLASSIFIED | 3 UNCLASSIFIED | 2 UNCLASSIFIED | 1 UNCLASSIFIED

PART OR CONTROL NUMBER	REVISIONS		
	ISS	CLASS REVIEW	DESCRIPTION
N/A	A		DRAWN BY - LAUER CHECKER - ENGINEER - APPROVED -

BLDG OUTFALL NO	BLDG ROOM NO	DRAIN NO	POTENTIAL EFFLUENT
11-202-OPN-1	N/A	?	H20-1

LEGEND

SEE "CLASS "A" EQUIPMENT CODE GUIDE"
ENG-4-EIC-006 (REVISED 9-1-83)

PART CODE	LOS ALAMOS NATIONAL LABORATORY	
SHEET 2 / ISSUE A	TITLE (UNC) TITLE CLASSIFICATION DRAIN SCHEDULE TA-15-202	
PART CLASSIFICATION UNCLASSIFIED		
ENGLISH (FT/IN)	DRAWING CLASSIFICATION UNCLASSIFIED	SIZE D / DRAWING NUMBER 13Y-192151
THIRD ANGLE PROJECTION	-25-91 15:13	FSCM 88516 / SCALE 1/1 / SHEET 2 OF
	STATUS	ORIGIN LA-ICEMPLUS-V2.03

DYE STUDY INFORMATION

BUILDING NUMBER	DRAIN NUMBER	DID DYE REACH EXPECTED DESTINATION?	COMMENTS
15-20	1LV1	YES	NONE
	1TD1	YES	NONE
15-40	BFD2	YES	NONE
	BFD3	YES	NONE
	1FD4	YES	NONE
	1FD5	YES	NONE
	1LV2	YES	NONE
	1S1	YES	NONE
	1S2	YES	NONE
	1S3	YES	NONE
	1WF1	YES	NONE
15-44	1LV1	YES	NONE
15-45	1LV1	YES	NONE
15-46		NO	NO WATER
15-50	1S1	YES	NONE
	1SH1	YES	NONE
15-183	BFD1	NO	PIPE BROKEN UNDERGROUND
	BFD7	NO	PIPE BROKEN UNDERGROUND
	BS1	NO	PIPE BROKEN UNDERGROUND
	BWF1	NO	PIPE BROKEN UNDERGROUND
	1FD1	YES	NONE
	1S4	YES	NONE
	1S6	YES	NONE
	1SH1	YES	NONE
	1SH2	YES	NONE
15-184	1FD1	YES	NONE
	1FD2	YES	NONE
	1FD3	YES	NONE
15-185	BFD7	YES	NONE
	BFD12	YES	NONE
	1FD4	YES	NONE
	1S1	YES	NONE

DYE STUDY INFORMATION

BUILDING NUMBER	DRAIN NUMBER	DID DYE REACH EXPECTED DESTINATION?	COMMENTS
15-186	1FD1	YES	NONE
	1FD2	NO	PLUGGED
	1FD3	YES	NONE
	1FD4	YES	NONE
	1S1	YES	NONE
15-194	1S1	YES	NONE
15-233	1LV1	YES	NONE
15-280	1S1	YES	NONE
15-285	1LV1	YES	NONE
	1S1	YES	NONE
15-305	1LV2	YES	NONE
	1S1	YES	NONE
15-306	1FD1	YES	NONE
	1WF1	YES	NONE
15-310	1FD1	YES	NONE
	1FD5	YES	NONE
	1FD6	YES	NONE
	1FD8	YES	NONE
15-313	1FD8	YES	NONE
	1FD10	YES	NONE
	1FD11	YES	NONE
	1S1	YES	NONE
	1S3	YES	NONE
	1SH2	YES	NONE
	2FD2	YES	NONE

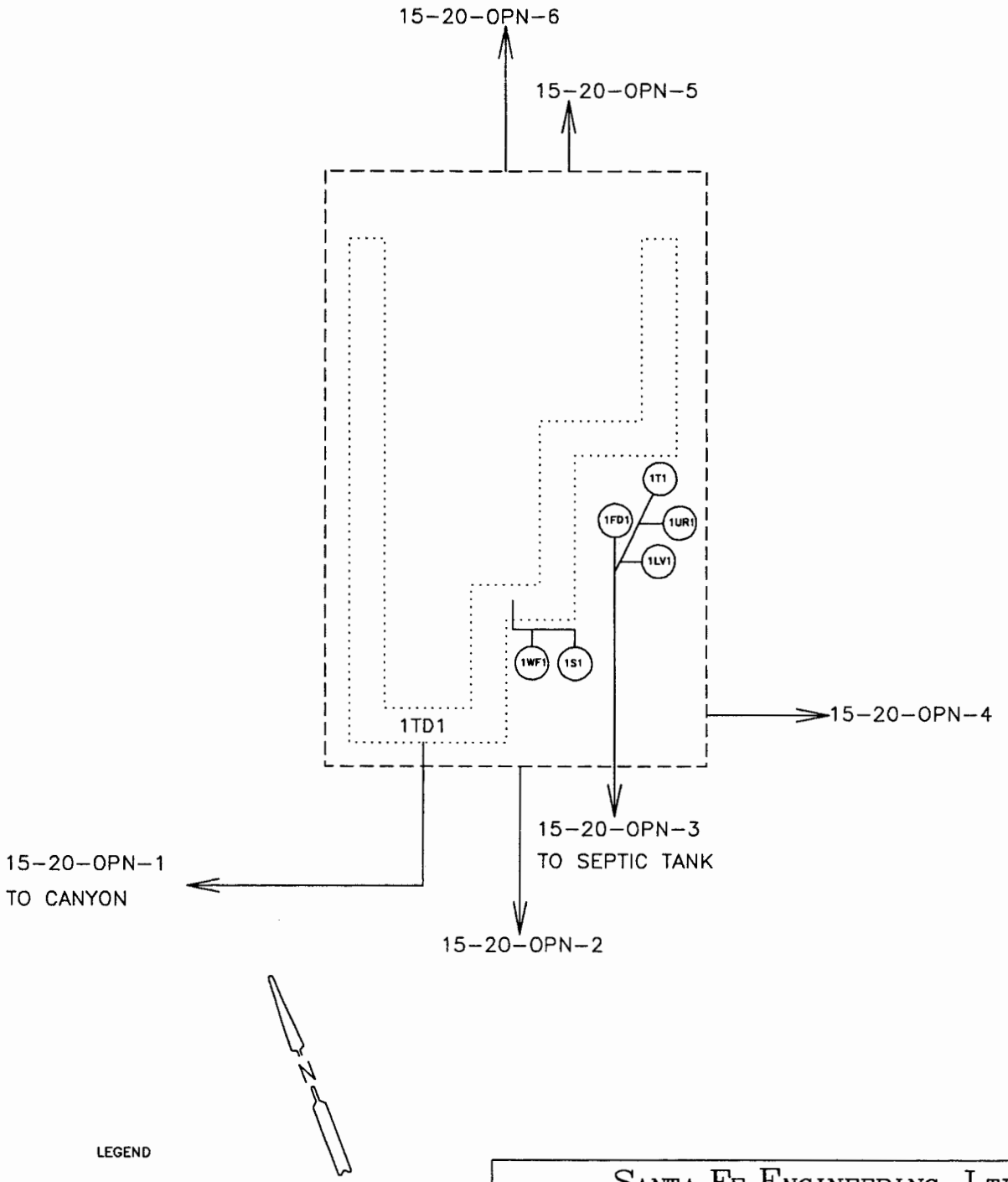

LEGEND

FD – FLOOR DRAIN
LV – LAVATORY
S – SINK
T – TOILET
TD – TRENCH DRAIN
UR – URINAL

NOTES

NOTE 1: SCHEMATIC BASED SITE VISIT

SANTA FE ENGINEERING, LTD.		
TA 15-20 BUILDING DRAIN SCHEMATIC	DRAWN	PEB
	DESIGN	PEB
	CHECKED	LBA
	DATE	6/10/92
SUBMITTED	RECOMMENDED	APPROVED
Los Alamos — Los Alamos National Laboratory, Los Alamos, New Mexico 87545	SHEET	OF
CLASSIFICATION	REVIEWER	DATE
REQUESTING DIVISION / REQUESTING GROUP	LAB JOB NO. 11056-24	DRAWING NO. FIGURE 1 / REV.

LEGEND

FD – FLOOR DRAIN
HB – HOSE BIB
LV – LAVATORY
RD – ROOF DRAIN
S – SINK
SH – SHOWER
T – TOILET
UR – URINAL
WF – WATER FOUNTAIN

NOTES

NOTE 1: SCHEMATIC BASED SITE VISIT

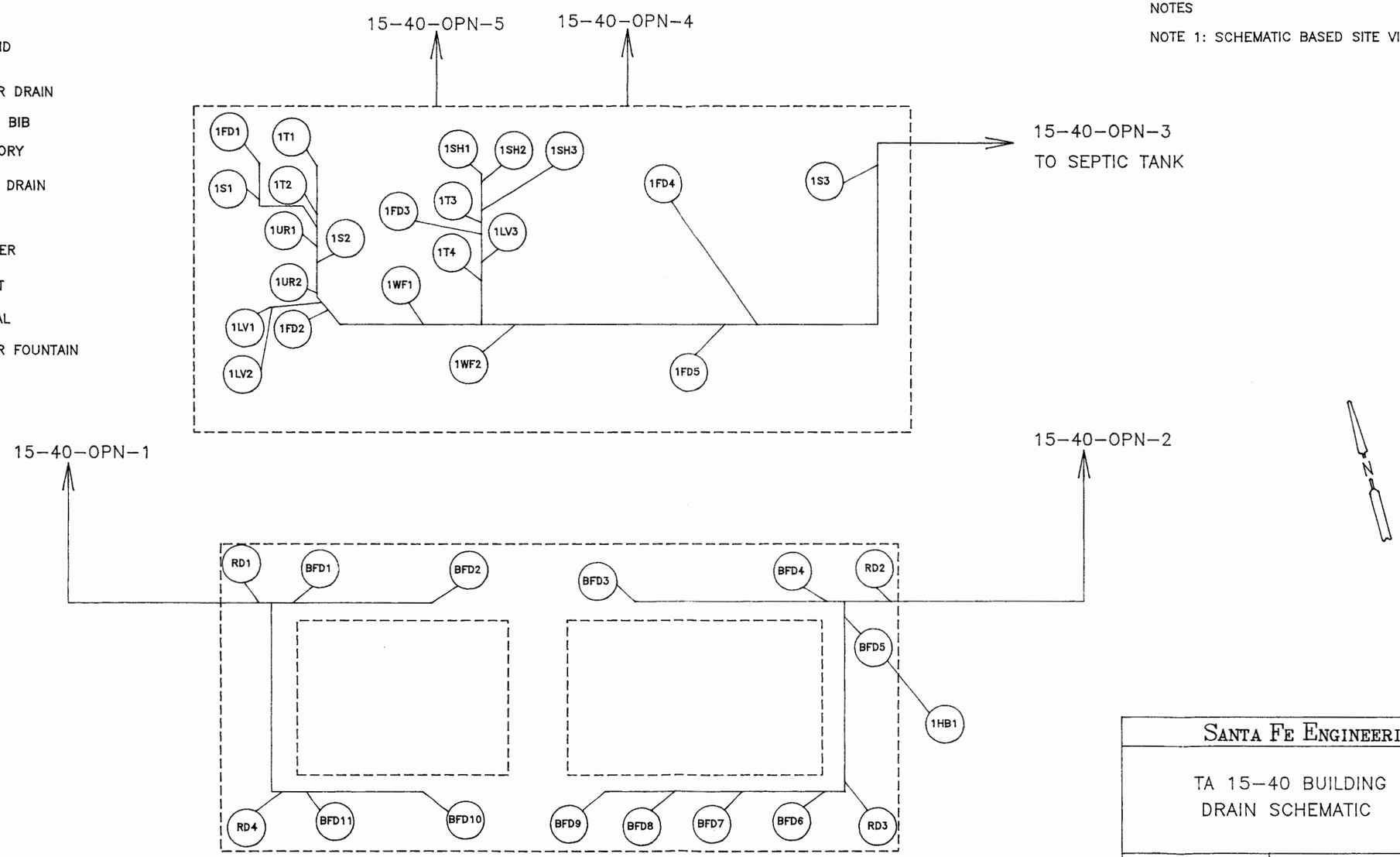

SANTA FE ENGINEERING, LTD.		
TA 15-40 BUILDING DRAIN SCHEMATIC	DRAWN	PEB
	DESIGN	PEB
	CHECKED	LBA
	DATE	6/10/92
SUBMITTED / RECOMMENDED / APPROVED		
Los Alamos — Los Alamos National Laboratory, Los Alamos, New Mexico 87545	SHEET	OF
CLASSIFICATION / REVIEWER / DATE		
REQUESTING DIVISION / REQUESTING GROUP	LAB JOB NO. 11056-24	DRAWING NO. FIGURE 2 / REV.

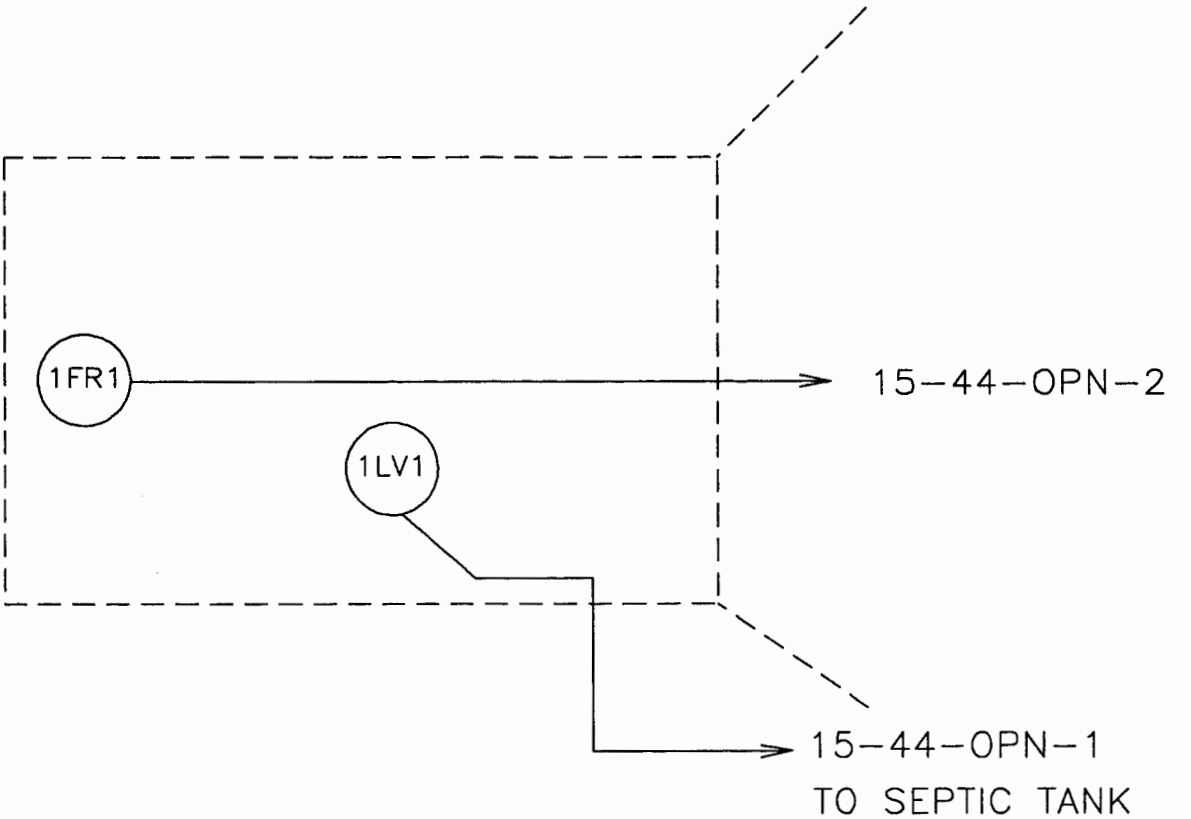

LEGEND

FR – FRENCH DRAIN

LV – LAVATORY

NOTES

NOTE 1: SCHEMATIC BASED ON DRAWINGS C-12887, C-12890, C-12916, C-12955 & R-2723 AND SITE VISIT

SANTA FE ENGINEERING, LTD.		
TA 15-44 BUILDING DRAIN SCHEMATIC	DRAWN	PEB
	DESIGN	PEB
	CHECKED	LBA
	DATE	6/10/92
SUBMITTED / RECOMMENDED / APPROVED		
Los Alamos — Los Alamos National Laboratory, Los Alamos, New Mexico 87545	SHEET	OF
CLASSIFICATION / REVIEWER / DATE		
REQUESTING DIVISION / REQUESTING GROUP	LAB JOB NO. 11056-24	DRAWING NO. FIGURE 3 / REV.

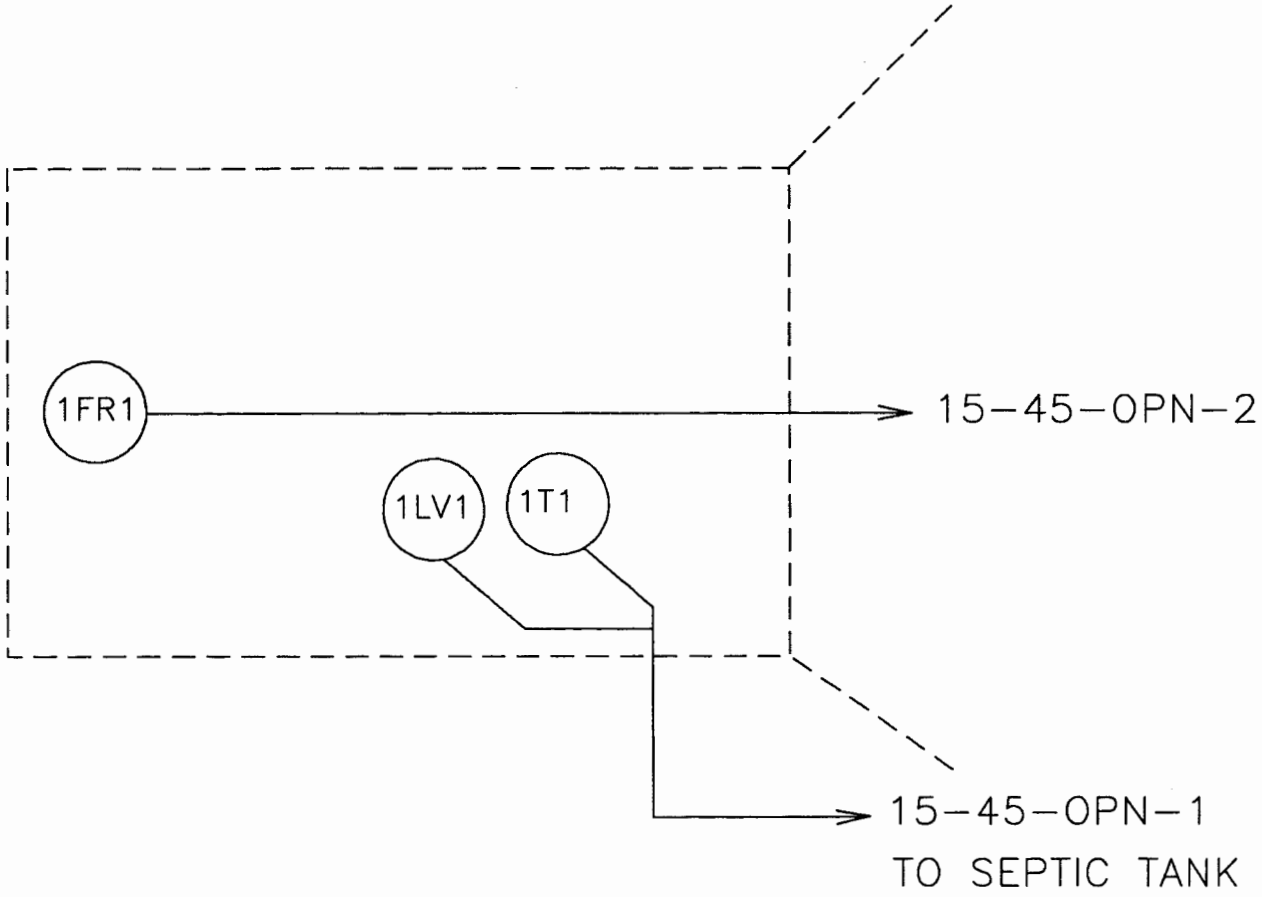

LEGEND

FR – FRENCH DRAIN

LV – LAVATORY

T – TOILET

NOTES

NOTE 1: SCHEMATIC BASED ON DRAWINGS C-12886 & C-12955 AND SITE VISIT

SANTA FE ENGINEERING, LTD.		
TA 15-45 BUILDING DRAIN SCHEMATIC	DRAWN	PEB
	DESIGN	PEB
	CHECKED	LBA
	DATE	6/10/92
SUBMITTED	RECOMMENDED	APPROVED
Los Alamos — Los Alamos National Laboratory, Los Alamos, New Mexico 87545	SHEET	OF
CLASSIFICATION	REVIEWER	DATE
REQUESTING DIVISION / REQUESTING GROUP	LAB JOB NO. 11056-24	DRAWING NO. FIGURE 4 / REV.

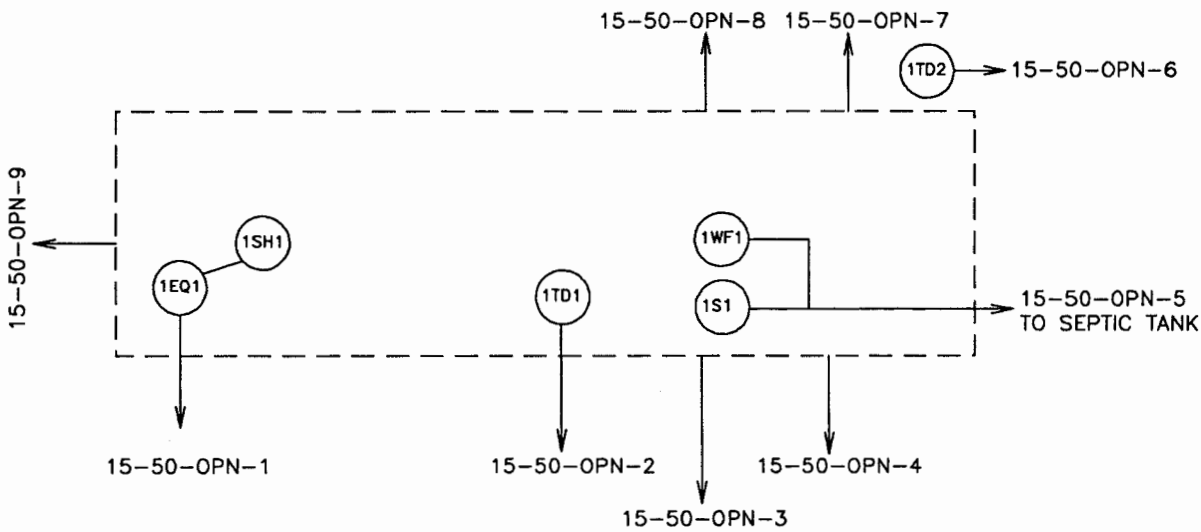

LEGEND

EQ – EQUIPMENT DRAIN

S – SINK

SH – SHOWER

TD – TRENCH DRAIN

WF – WATER FOUNTAIN

NOTES

NOTE 1: SCHEMATIC BASED ON DRAWINGS C-19083, C-19164, C-19165, C-41022 & R-2726 AND SITE VISIT

SANTA FE ENGINEERING, LTD.		
TA 15-50 BUILDING DRAIN SCHEMATIC	DRAWN	PEB
	DESIGN	PEB
	CHECKED	LBA
	DATE	6/10/92
SUBMITTED	RECOMMENDED	APPROVED
Los Alamos — Los Alamos National Laboratory, Los Alamos, New Mexico 87545	SHEET	OF
CLASSIFICATION	REVIEWER	DATE
REQUESTING DIVISION / REQUESTING GROUP	LAB JOB NO. 11056-24	DRAWING NO. FIGURE 5 / REV.

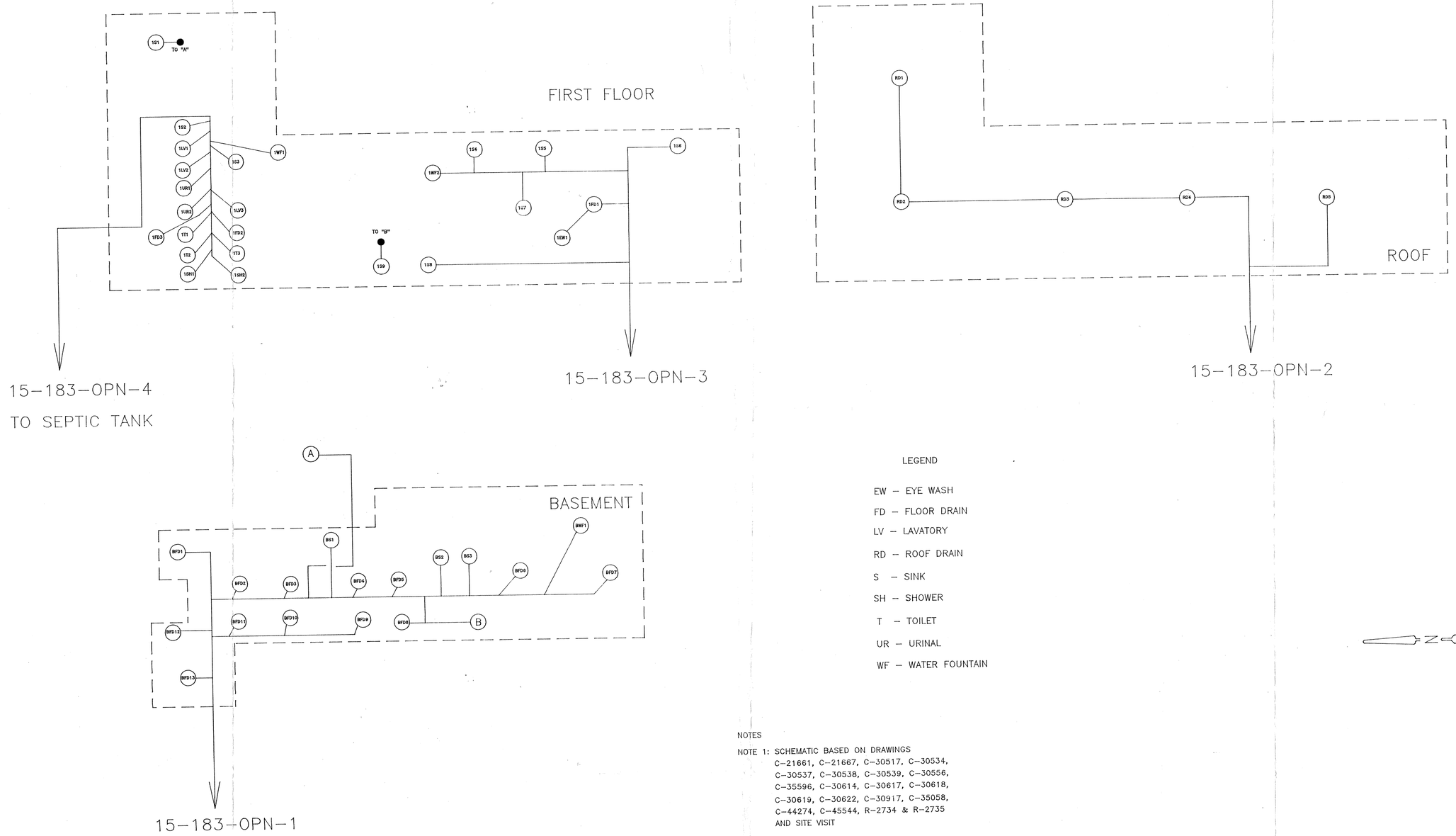

LEGEND

EW – EYE WASH

FD – FLOOR DRAIN

LV – LAVATORY

RD – ROOF DRAIN

S – SINK

SH – SHOWER

T – TOILET

UR – URINAL

WF – WATER FOUNTAIN

NOTES

NOTE 1: SCHEMATIC BASED ON DRAWINGS C–21661, C–21667, C–30517, C–30534, C–30537, C–30538, C–30539, C–30556, C–35596, C–30614, C–30617, C–30618, C–30619, C–30622, C–30917, C–35058, C–44274, C–45544, R–2734 & R–2735 AND SITE VISIT

SANTA FE ENGINEERING, LTD.			
TA 15–183 BUILDING DRAIN SCHEMATIC		DRAWN	
		DESIGN	PEB
		CHECKED	
		DATE	6/10/92
SUBMITTED	RECOMMENDED	APPROVED	
Los Alamos	Los Alamos National Laboratory Los Alamos, New Mexico 87545	SHEET	OF
CLASSIFICATION	REVIEWER	DATE	
REQUESTING DIVISION	LAB JOB NO.	DRAWING NO.	REV.
REQUESTING GROUP	11056–24	FIGURE 6	

15218-A

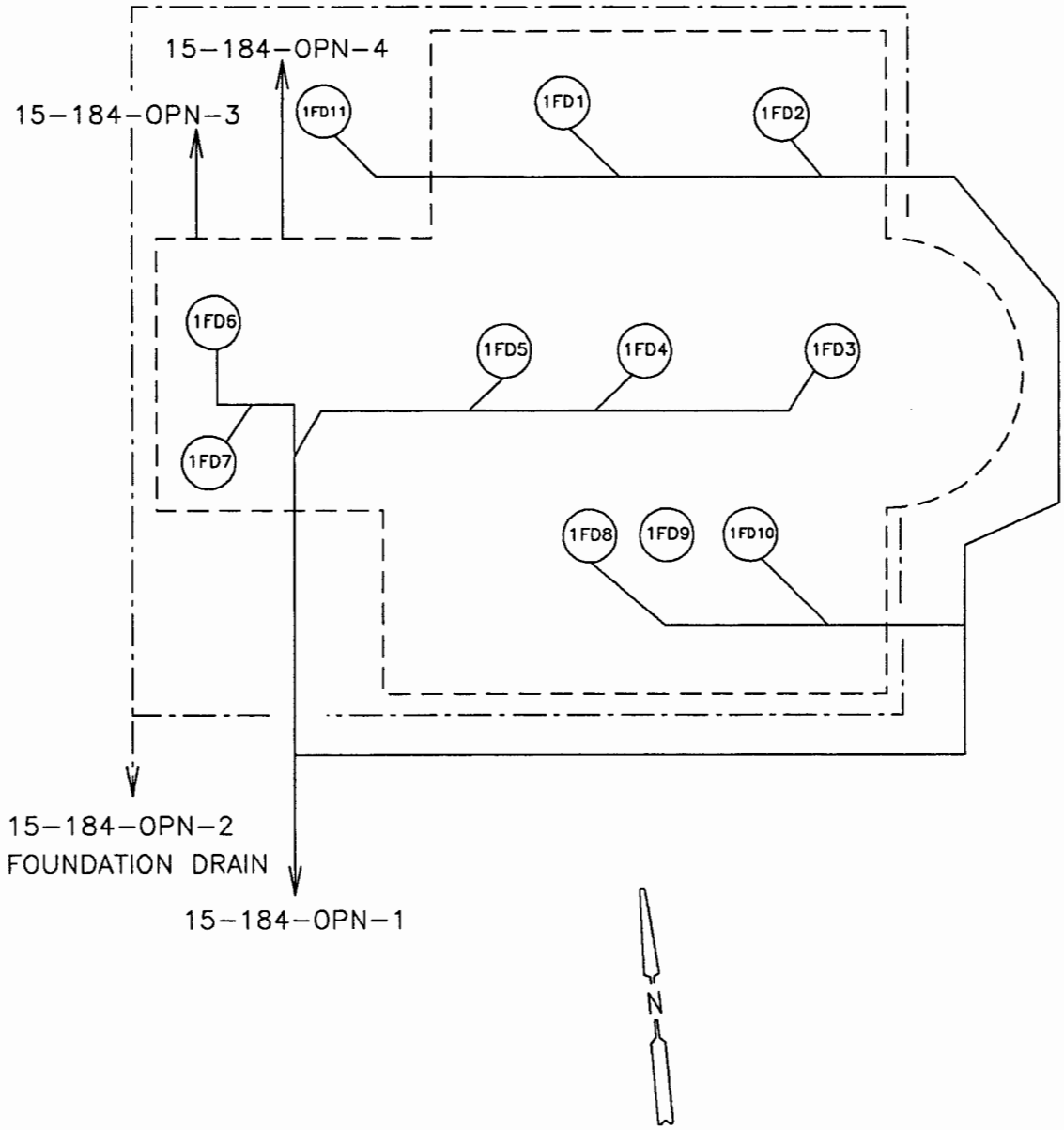

LEGEND

FD – FLOOR DRAIN

NOTES

NOTE 1: SCHEMATIC BASED ON DRAWINGS C-30518, C-30642 & C-43075 AND SITE VISIT

SANTA FE ENGINEERING, LTD.		
TA 15-184 BUILDING DRAIN SCHEMATIC	DRAWN	PEB
	DESIGN	PEB
	CHECKED	LBA
	DATE	6/10/92
SUBMITTED	RECOMMENDED	APPROVED
Los Alamos	Los Alamos National Laboratory Los Alamos, New Mexico 87545	SHEET / OF
CLASSIFICATION	REVIEWER	DATE
REQUESTING DIVISION / REQUESTING GROUP	LAB JOB NO. 11056-24	DRAWING NO. FIGURE 7 / REV.

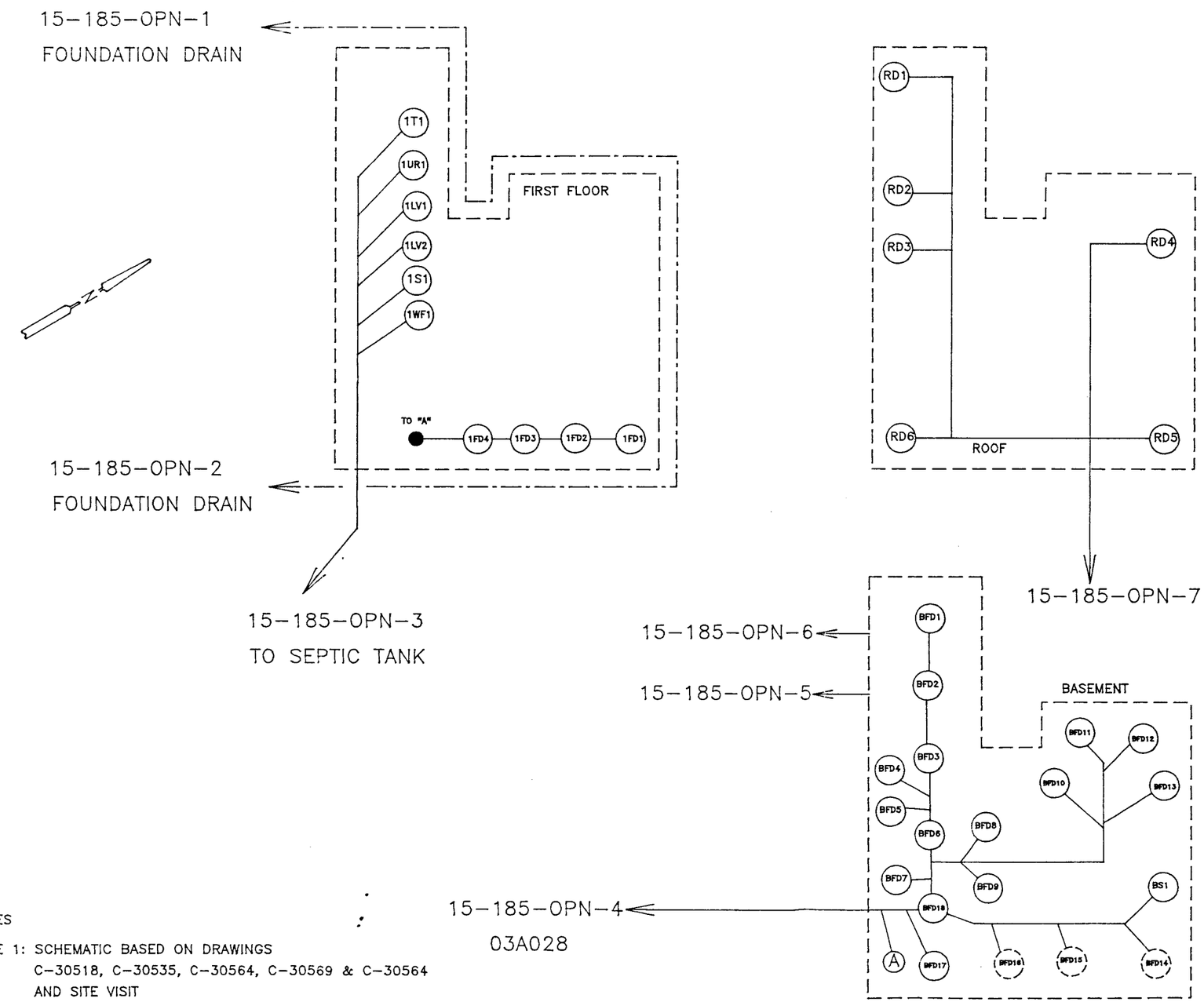

LEGEND

FD – FLOOR DRAIN
LV – LAVATORY
RD – ROOF DRAIN
S – SINK
T – TOILET
UR – URINAL
WF – WATER FOUNTAIN

NOTES

NOTE 1: SCHEMATIC BASED ON DRAWINGS C-30518, C-30535, C-30564, C-30569 & C-30564 AND SITE VISIT

SANTA FE ENGINEERING, LTD.		
TA 15-185 BUILDING DRAIN SCHEMATIC	DRAWN	PEB
	DESIGN	PEB
	CHECKED	LBA
	DATE	6/10/92
SUBMITTED / RECOMMENDED / APPROVED		
Los Alamos — Los Alamos National Laboratory, Los Alamos, New Mexico 87545	SHEET	OF
CLASSIFICATION / REVIEWER / DATE		
REQUESTING DIVISION / REQUESTING GROUP	LAB JOB NO. 11056-24	DRAWING NO. FIGURE 8 / REV.

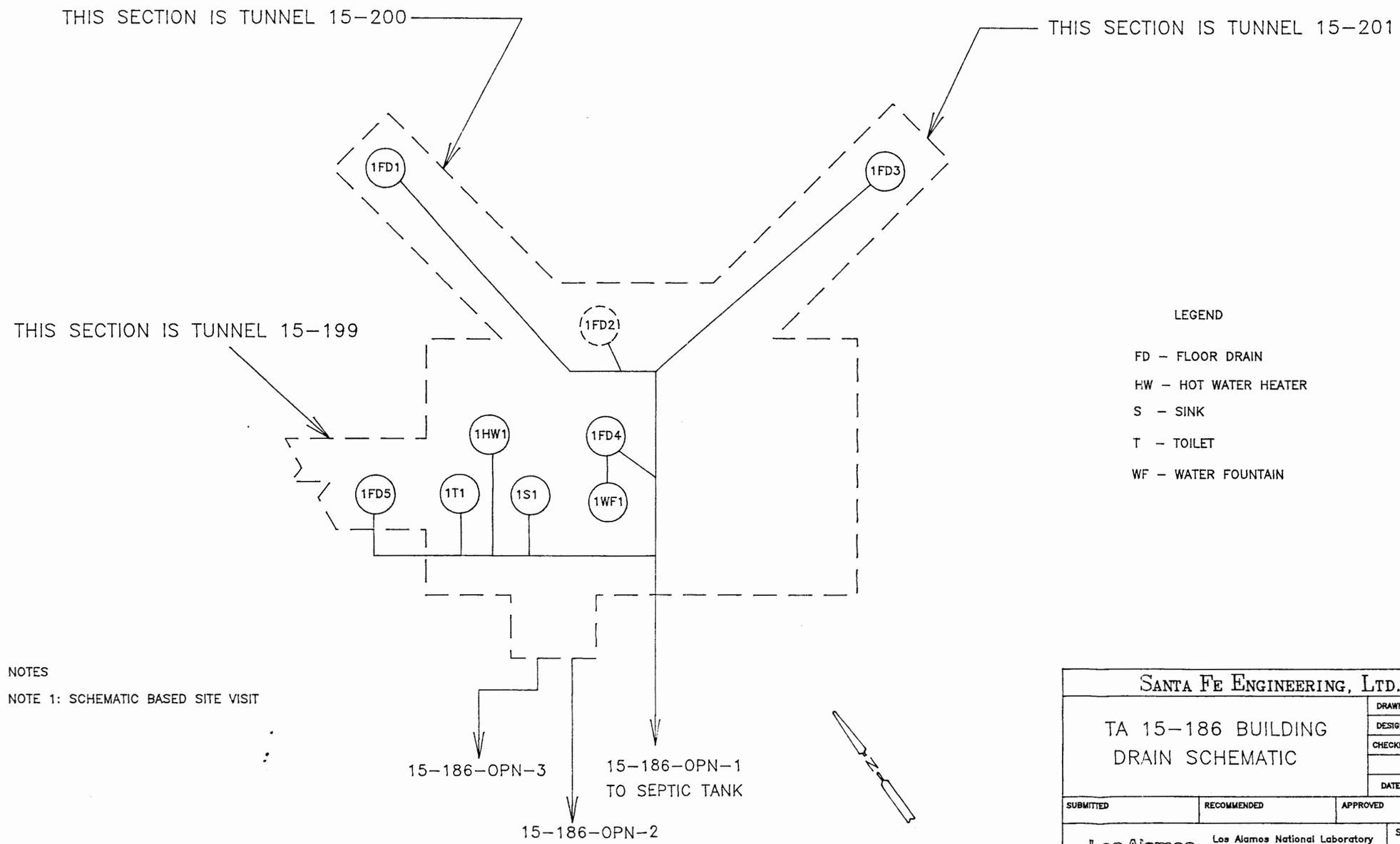

LEGEND

FD – FLOOR DRAIN

HW – HOT WATER HEATER

S – SINK

T – TOILET

WF – WATER FOUNTAIN

NOTES

NOTE 1: SCHEMATIC BASED SITE VISIT

SANTA FE ENGINEERING, LTD.		
TA 15-186 BUILDING DRAIN SCHEMATIC	DRAWN	PEB
	DESIGN	PEB
	CHECKED	LBA
	DATE	6/10/92

SUBMITTED	RECOMMENDED	APPROVED	
Los Alamos	Los Alamos National Laboratory Los Alamos, New Mexico 87545	SHEET	OF
CLASSIFICATION	REVIEWER	DATE	
REQUESTING DIVISION REQUESTING GROUP	LAB JOB NO. 11056-24	DRAWING NO. FIGURE 9	REV.

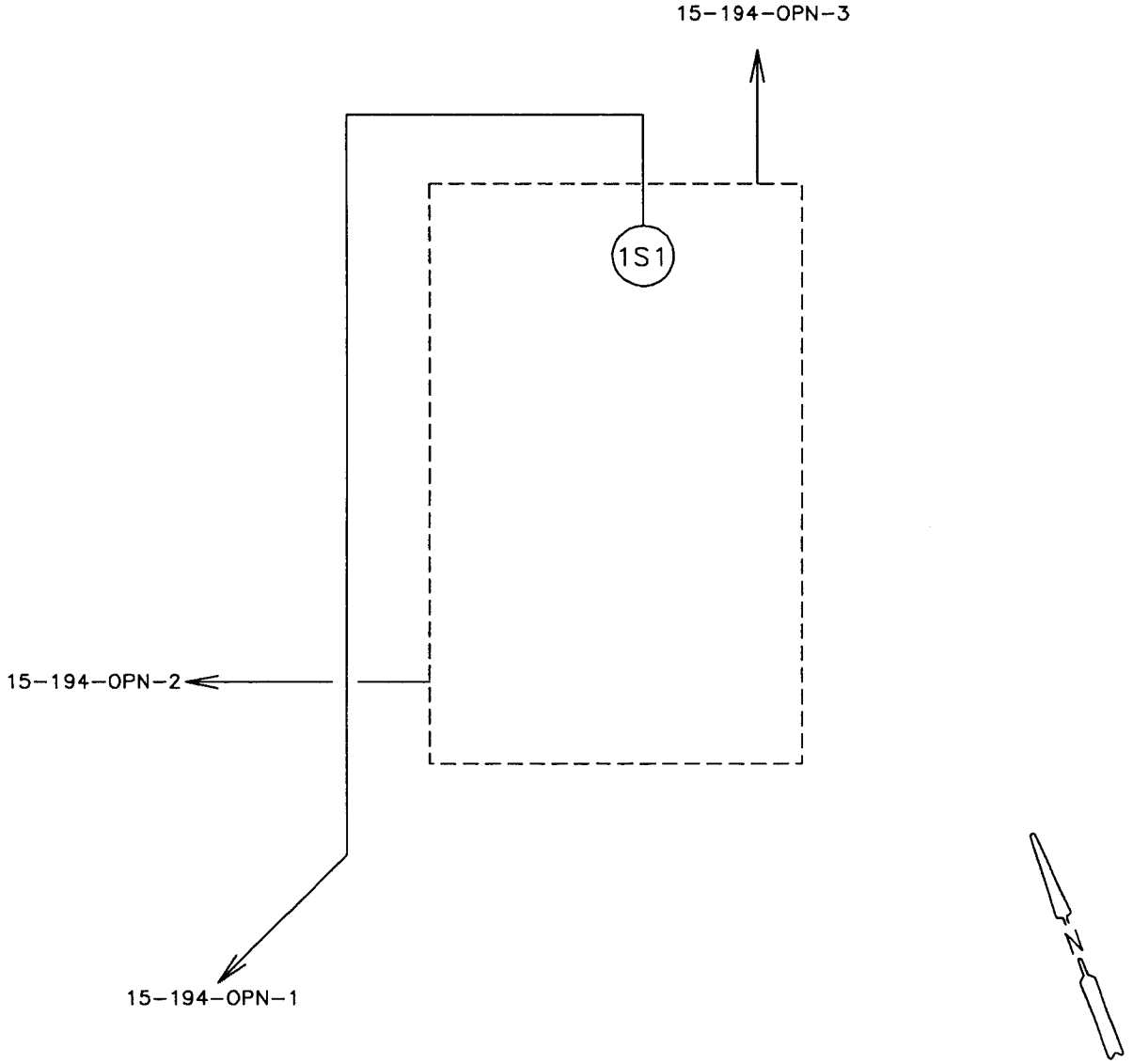

LEGEND

S – SINK

NOTES

NOTE 1: SCHEMATIC BASED SITE VISIT

SANTA FE ENGINEERING, LTD.		
TA 15-194 BUILDING DRAIN SCHEMATIC	DRAWN	PEB
	DESIGN	PEB
	CHECKED	LBA
	DATE	6/10/92
SUBMITTED	RECOMMENDED	APPROVED
Los Alamos — Los Alamos National Laboratory, Los Alamos, New Mexico 87545	SHEET	OF
CLASSIFICATION	REVIEWER	DATE
REQUESTING DIVISION / REQUESTING GROUP	LAB JOB NO. 11056-24	DRAWING NO. FIGURE 10 / REV.

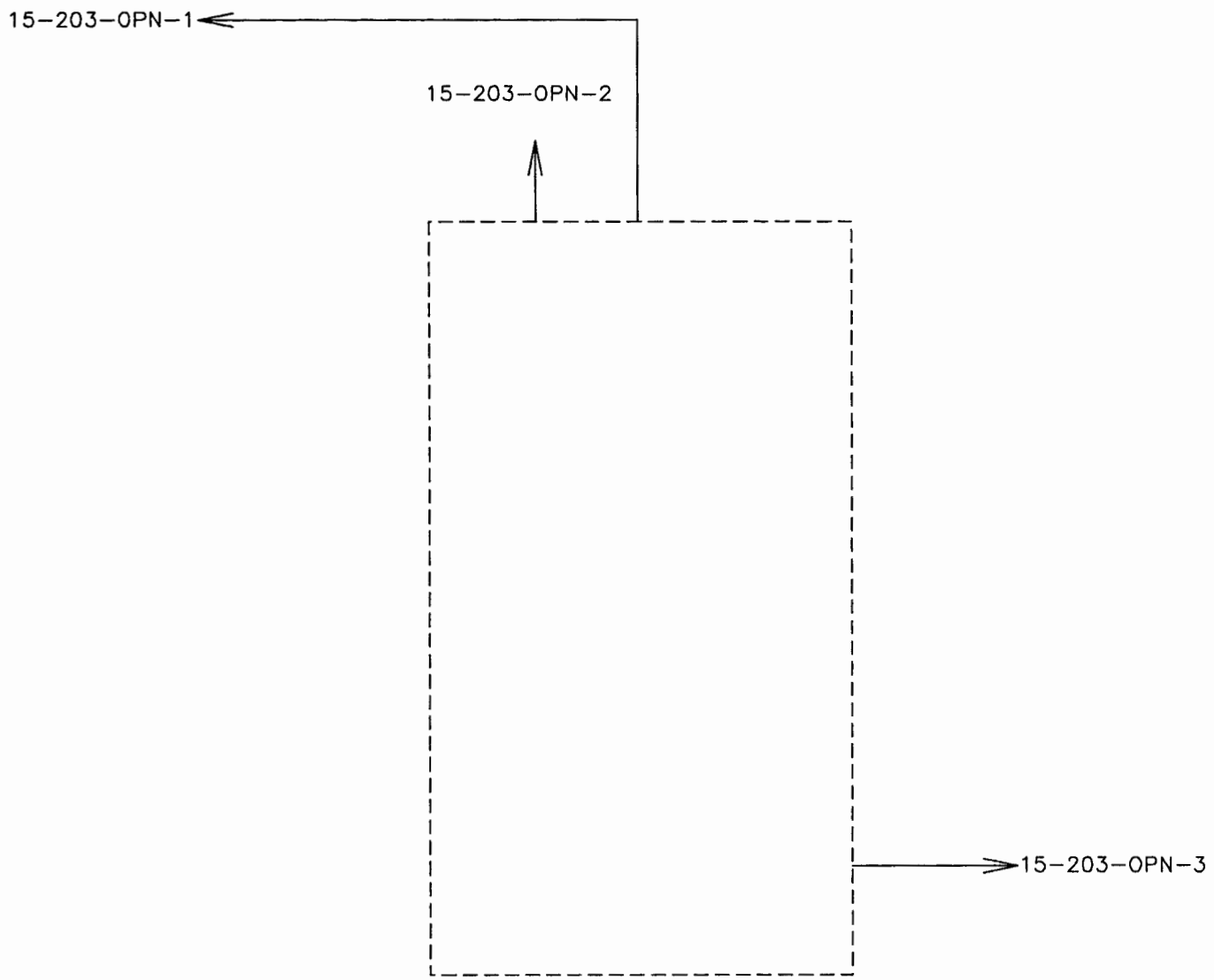

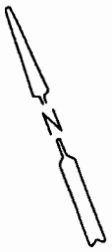

NOTES

NOTE 1: SCHEMATIC BASED SITE VISIT

SANTA FE ENGINEERING, LTD.		
TA 15-203 BUILDING DRAIN SCHEMATIC	DRAWN	PEB
	DESIGN	PEB
	CHECKED	LBA
	DATE	6/10/92
SUBMITTED	RECOMMENDED	APPROVED
Los Alamos — Los Alamos National Laboratory, Los Alamos, New Mexico 87545	SHEET	OF
CLASSIFICATION	REVIEWER	DATE
REQUESTING DIVISION / REQUESTING GROUP	LAB JOB NO. 11056-24	DRAWING NO. FIGURE 11 / REV.

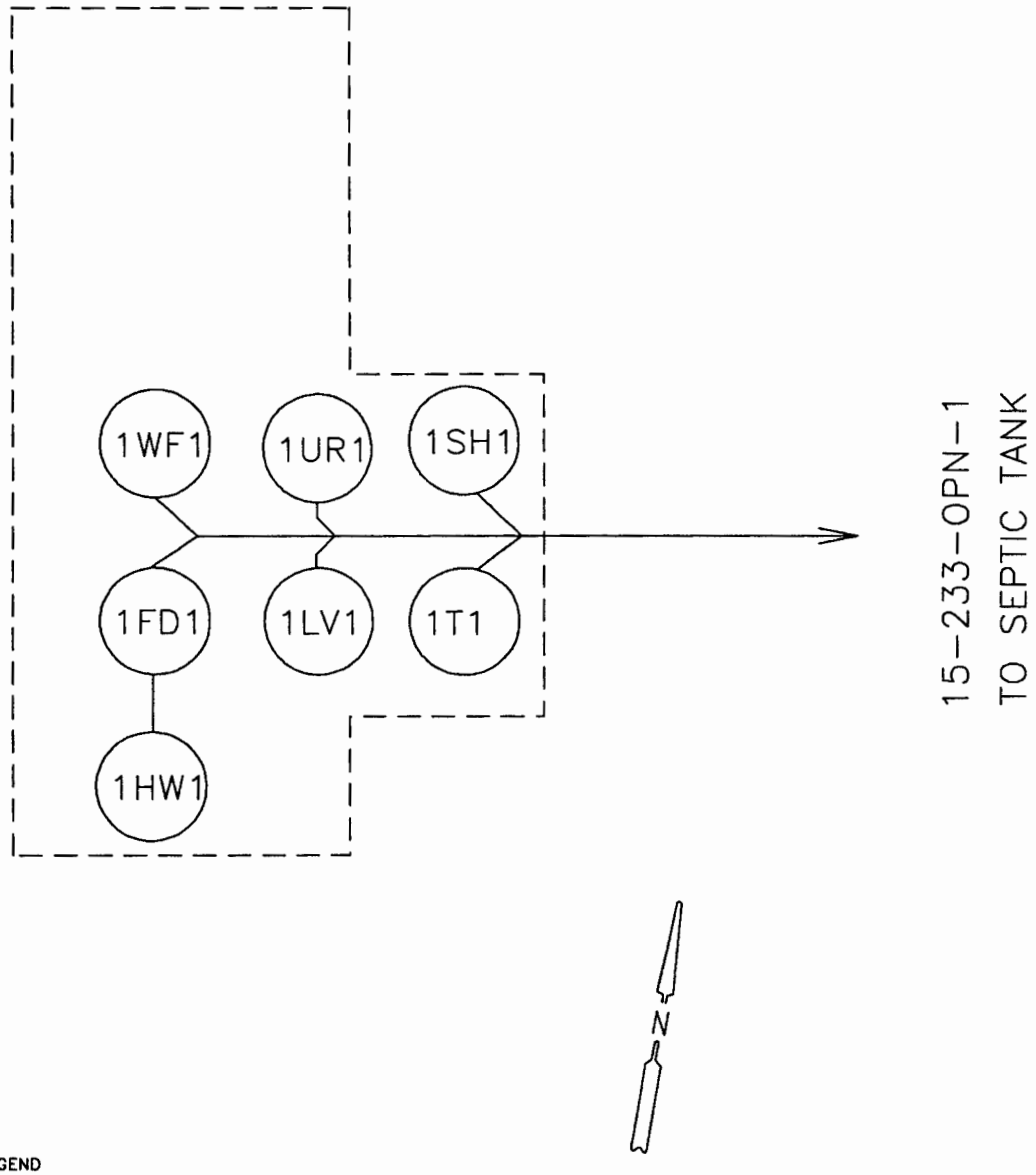

LEGEND

FD – FLOOR DRAIN
HW – HOT WATER HEATER
LV – LAVATORY
SH – SHOWER
T – TOILET
UR – URINAL
WF – WATER FOUNTAIN

NOTES

NOTE 1: SCHEMATIC BASED ON DRAWINGS C-26366, C-43024 SHTS 1, 2, & 3 AND SITE VISIT

SANTA FE ENGINEERING, LTD.		
TA 15-233 BUILDING DRAIN SCHEMATIC	DRAWN	PEB
	DESIGN	PEB
	CHECKED	LBA
	DATE	6/10/92
SUBMITTED	RECOMMENDED	APPROVED
Los Alamos	Los Alamos National Laboratory, Los Alamos, New Mexico 87545	SHEET / OF
CLASSIFICATION	REVIEWER	DATE
REQUESTING DIVISION / REQUESTING GROUP	LAB JOB NO. 11056-24	DRAWING NO. FIGURE 12 / REV.

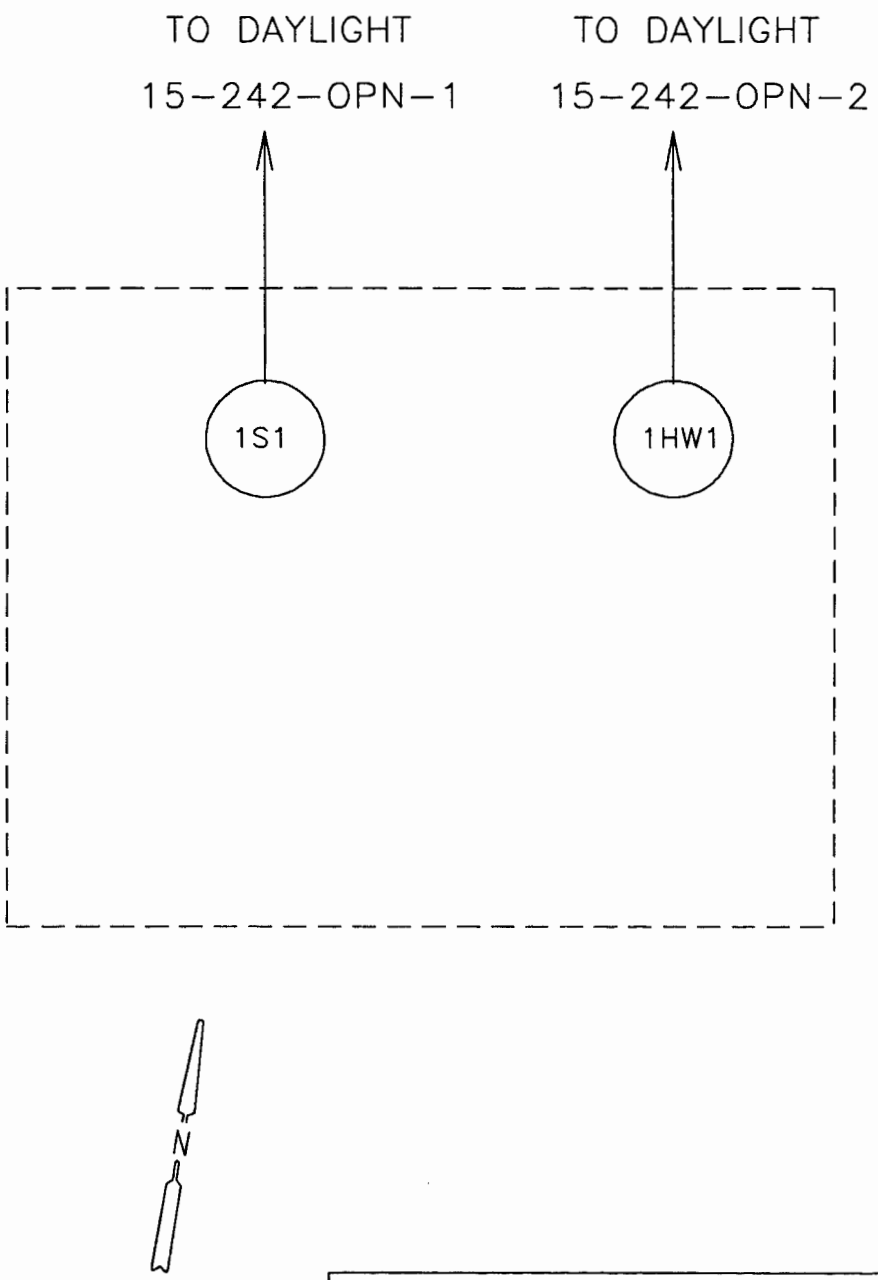

LEGEND

HW – HOT WATER HEATER

S – SINK

NOTES

NOTE 1: SCHEMATIC BASED ON DRAWINGS C-31544 & R-242 AND SITE VISIT

SANTA FE ENGINEERING, LTD.		
TA 15-242 BUILDING DRAIN SCHEMATIC	DRAWN	PEB
	DESIGN	PEB
	CHECKED	LBA
	DATE	6/10/92
SUBMITTED	RECOMMENDED	APPROVED
Los Alamos	Los Alamos National Laboratory, Los Alamos, New Mexico 87545	SHEET OF
CLASSIFICATION	REVIEWER	DATE
REQUESTING DIVISION / REQUESTING GROUP	LAB JOB NO. 11056-24	DRAWING NO. FIGURE 13 / REV.

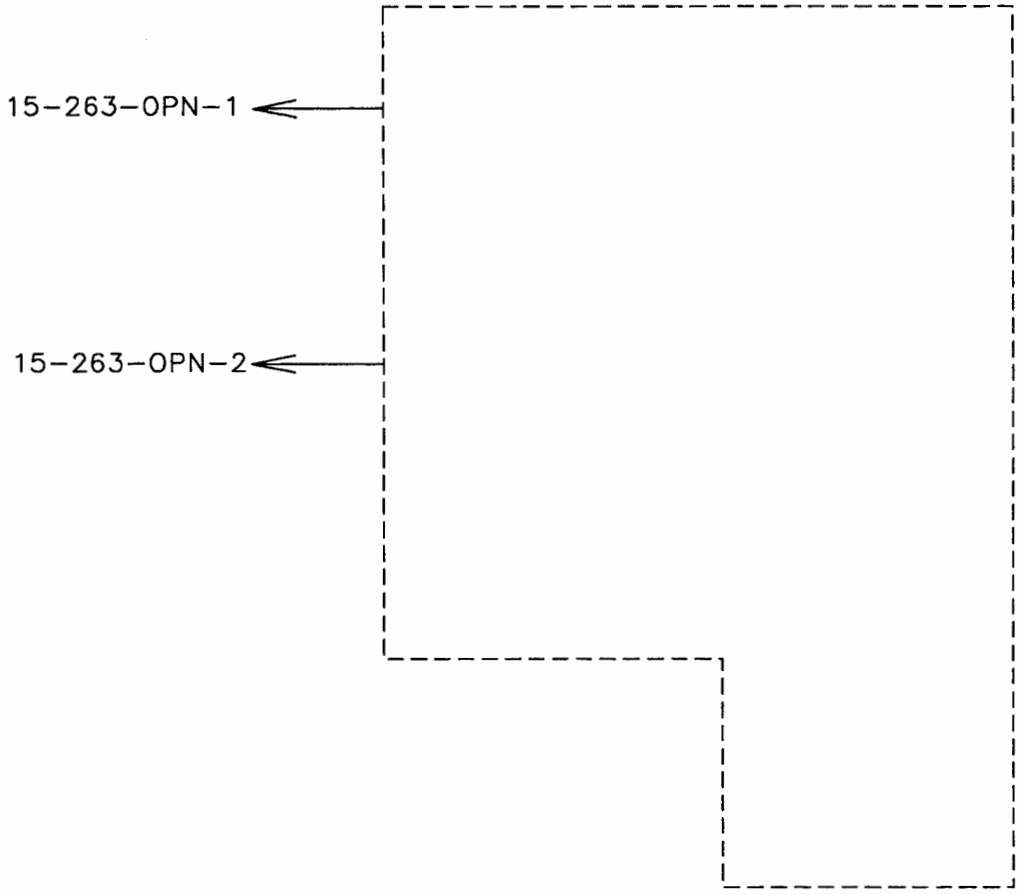

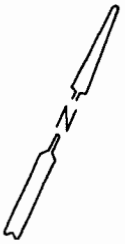

NOTES

NOTE 1: SCHEMATIC BASED SITE VISIT

SANTA FE ENGINEERING, LTD.			
TA 15-263 BUILDING DRAIN SCHEMATIC		DRAWN	PEB
		DESIGN	PEB
		CHECKED	LBA
		DATE	6/10/92
SUBMITTED	RECOMMENDED	APPROVED	
Los Alamos	Los Alamos National Laboratory Los Alamos, New Mexico 87545	SHEET	OF
CLASSIFICATION	REVIEWER	DATE	
REQUESTING DIVISION	LAB JOB NO.	DRAWING NO.	REV.
REQUESTING GROUP	11056-24	FIGURE 14	

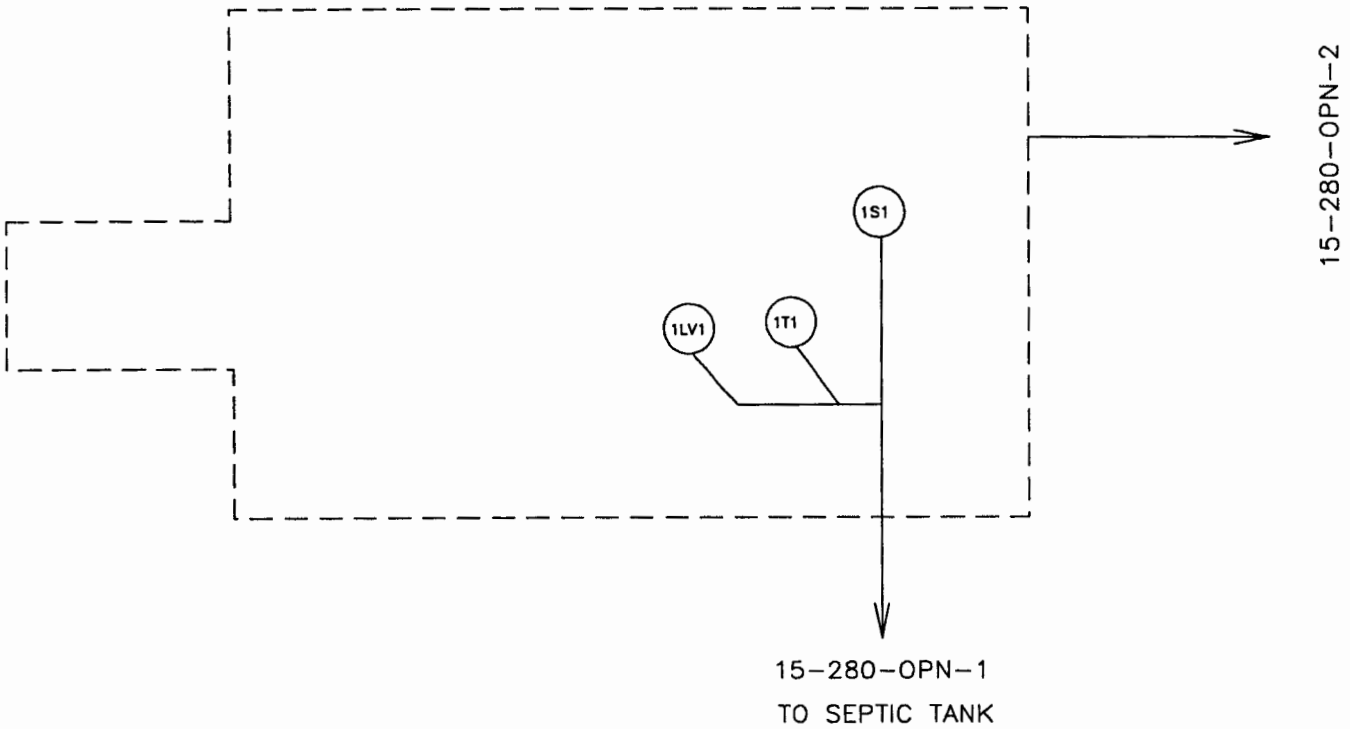

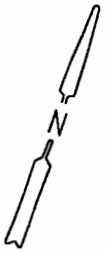

LEGEND

LV – LAVATORY

S – SINK

T – TOILET

NOTES

NOTE 1: SCHEMATIC BASED ON DRAWINGS C-42894, C-42905 SHTS 2, 7 & 14 & R-5176 AND SITE VISIT

SANTA FE ENGINEERING, LTD.		
TA 15-280 BUILDING DRAIN SCHEMATIC	DRAWN	PEB
	DESIGN	PEB
	CHECKED	LBA
	DATE	6/10/92
SUBMITTED	RECOMMENDED	APPROVED
Los Alamos	Los Alamos National Laboratory Los Alamos, New Mexico 87545	SHEET OF
CLASSIFICATION	REVIEWER	DATE
REQUESTING DIVISION / REQUESTING GROUP	LAB JOB NO. 11056-24	DRAWING NO. FIGURE 15 / REV.

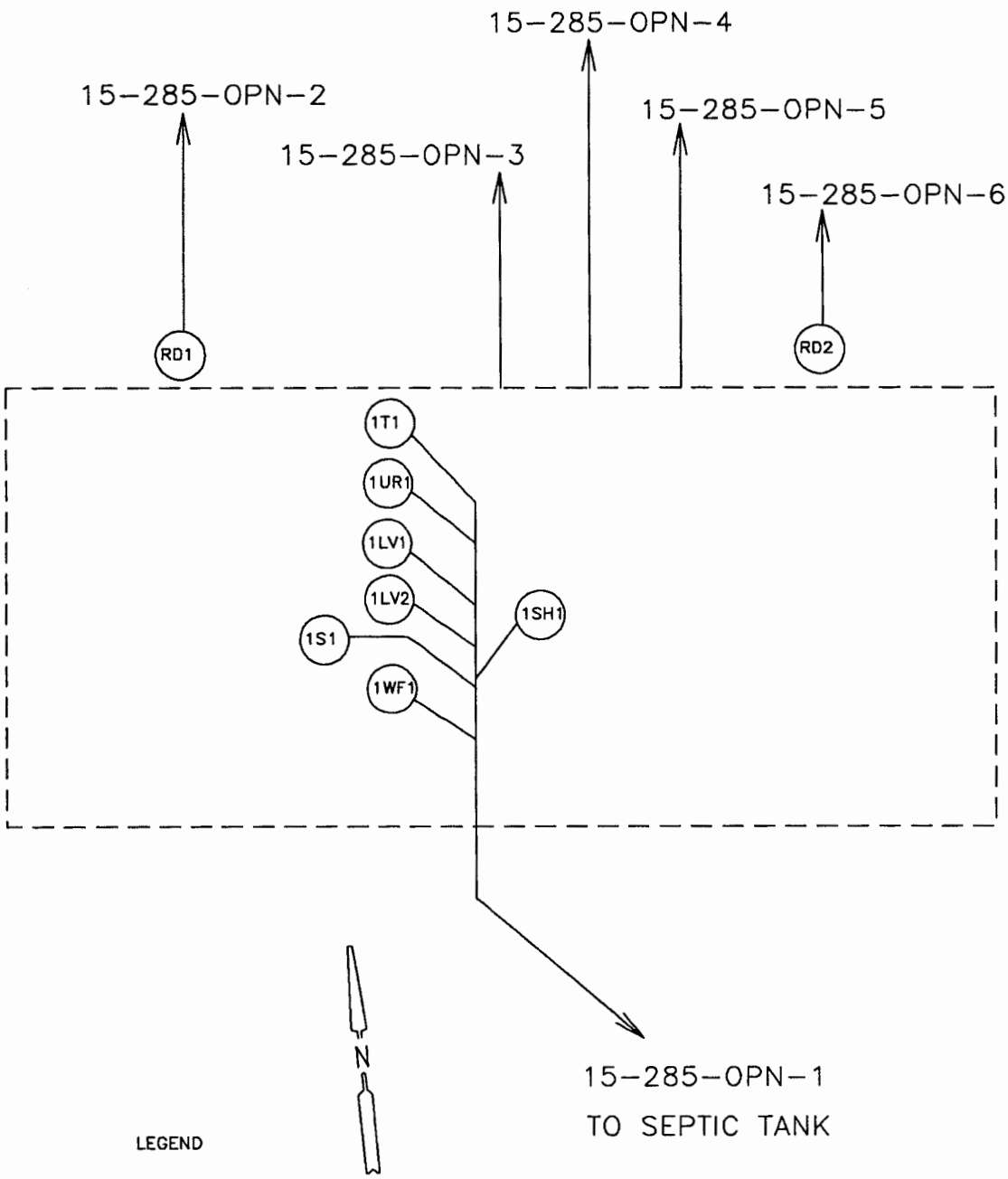

LEGEND

LV – LAVATORY
RD – ROOF DRAIN
S – SINK
SH – SHOWER
T – TOILET
UR – URINAL
WF – WATER FOUNTAIN

NOTES

NOTE 1: SCHEMATIC BASED ON DRAWINGS C-43768 SHTS 2,4 & 5 & R-5309 AND SITE VISIT

SANTA FE ENGINEERING, LTD.			
TA 15-285 BUILDING DRAIN SCHEMATIC		DRAWN	PEB
		DESIGN	PEB
		CHECKED	LBA
		DATE	6/10/92
SUBMITTED	RECOMMENDED	APPROVED	
Los Alamos	Los Alamos National Laboratory Los Alamos, New Mexico 87545	SHEET	OF
CLASSIFICATION	REVIEWER	DATE	
REQUESTING DIVISION	LAB JOB NO.	DRAWING NO.	REV.
REQUESTING GROUP	11056-24	FIGURE 16	

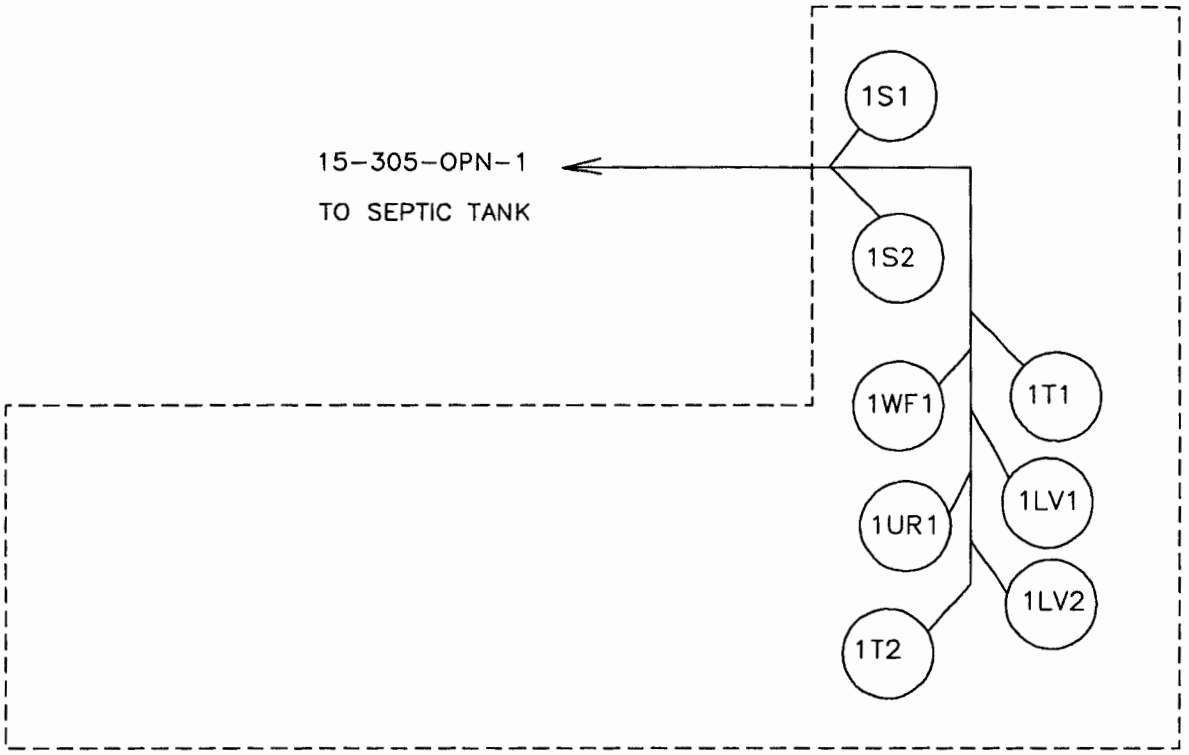

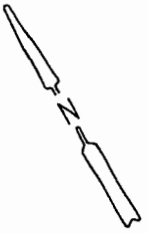

LEGEND

LV – LAVATORY

S – SINK

T – TOILET

UR – URINAL

WF – WATER FOUNTAIN

NOTES

NOTE 1: SCHEMATIC BASED SITE VISIT

SANTA FE ENGINEERING, LTD.		
TA 15-305 BUILDING DRAIN SCHEMATIC	DRAWN	PEB
	DESIGN	PEB
	CHECKED	LBA
	DATE	6/10/92
SUBMITTED	RECOMMENDED	APPROVED
Los Alamos — Los Alamos National Laboratory, Los Alamos, New Mexico 87545	SHEET	OF
CLASSIFICATION	REVIEWER	DATE
REQUESTING DIVISION / REQUESTING GROUP	LAB JOB NO. 11056-24	DRAWING NO. FIGURE 17 / REV.

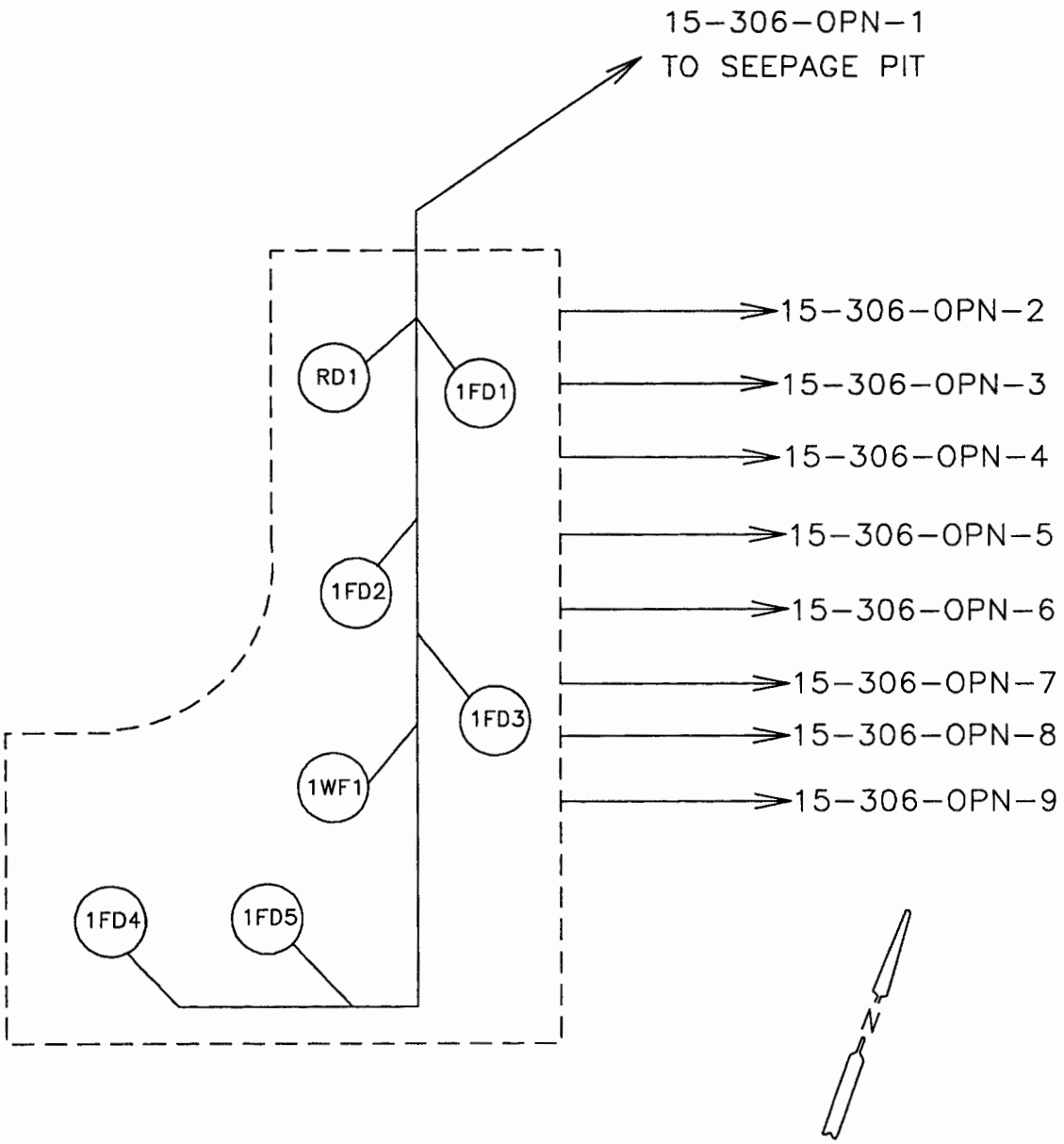

LEGEND

FD – FLOOR DRAIN

RD – ROOF DRAIN

WF – WATER FOUNTAIN

NOTES

NOTE 1: SCHEMATIC BASED ON DRAWINGS C-44687 SHTS 5, 6 & 22 AND SITE VISIT

SANTA FE ENGINEERING, LTD.		
TA 15-306 BUILDING DRAIN SCHEMATIC	DRAWN	PEB
	DESIGN	PEB
	CHECKED	LBA
	DATE	6/10/92
SUBMITTED	RECOMMENDED	APPROVED
Los Alamos — Los Alamos National Laboratory, Los Alamos, New Mexico 87545	SHEET	OF
CLASSIFICATION	REVIEWER	DATE
REQUESTING DIVISION / REQUESTING GROUP	LAB JOB NO. 11056-24	DRAWING NO. FIGURE 18 / REV.

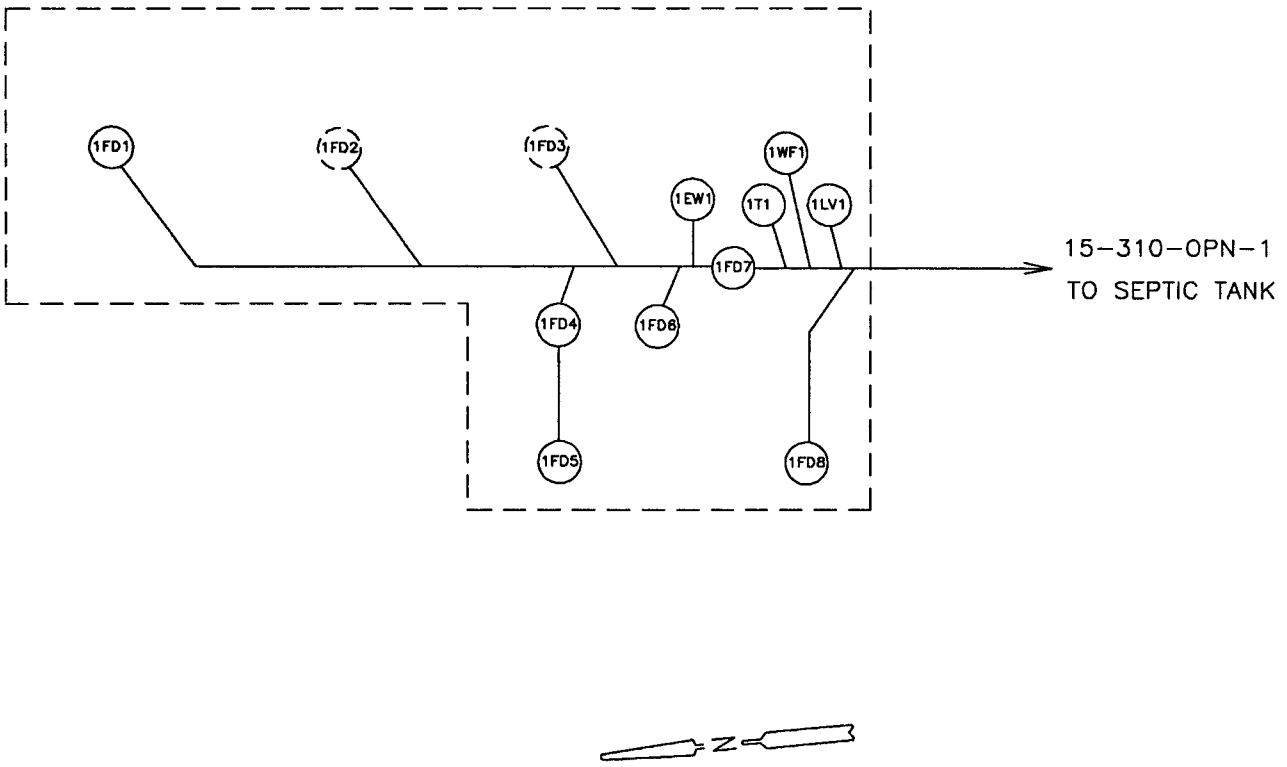

LEGEND

EW – EYE WASH

FD – FLOOR DRAIN

LV – LAVATORY

T – TOILET

WF – WATER FOUNTAIN

NOTES

NOTE 1: SCHEMATIC BASED ON DRAWINGS C-45219 SHTS 2, 3, 4, 10, 11 & 22 AND SITE VISIT

SANTA FE ENGINEERING, LTD.		
TA 15-310 BUILDING DRAIN SCHEMATIC	DRAWN	PEB
	DESIGN	PEB
	CHECKED	LBA
	DATE	6/10/92
SUBMITTED	RECOMMENDED	APPROVED
Los Alamos — Los Alamos National Laboratory, Los Alamos, New Mexico 87545	SHEET	OF
CLASSIFICATION	REVIEWER	DATE
REQUESTING DIVISION / REQUESTING GROUP	LAB JOB NO. 11056-24	DRAWING NO. FIGURE 19 / REV.

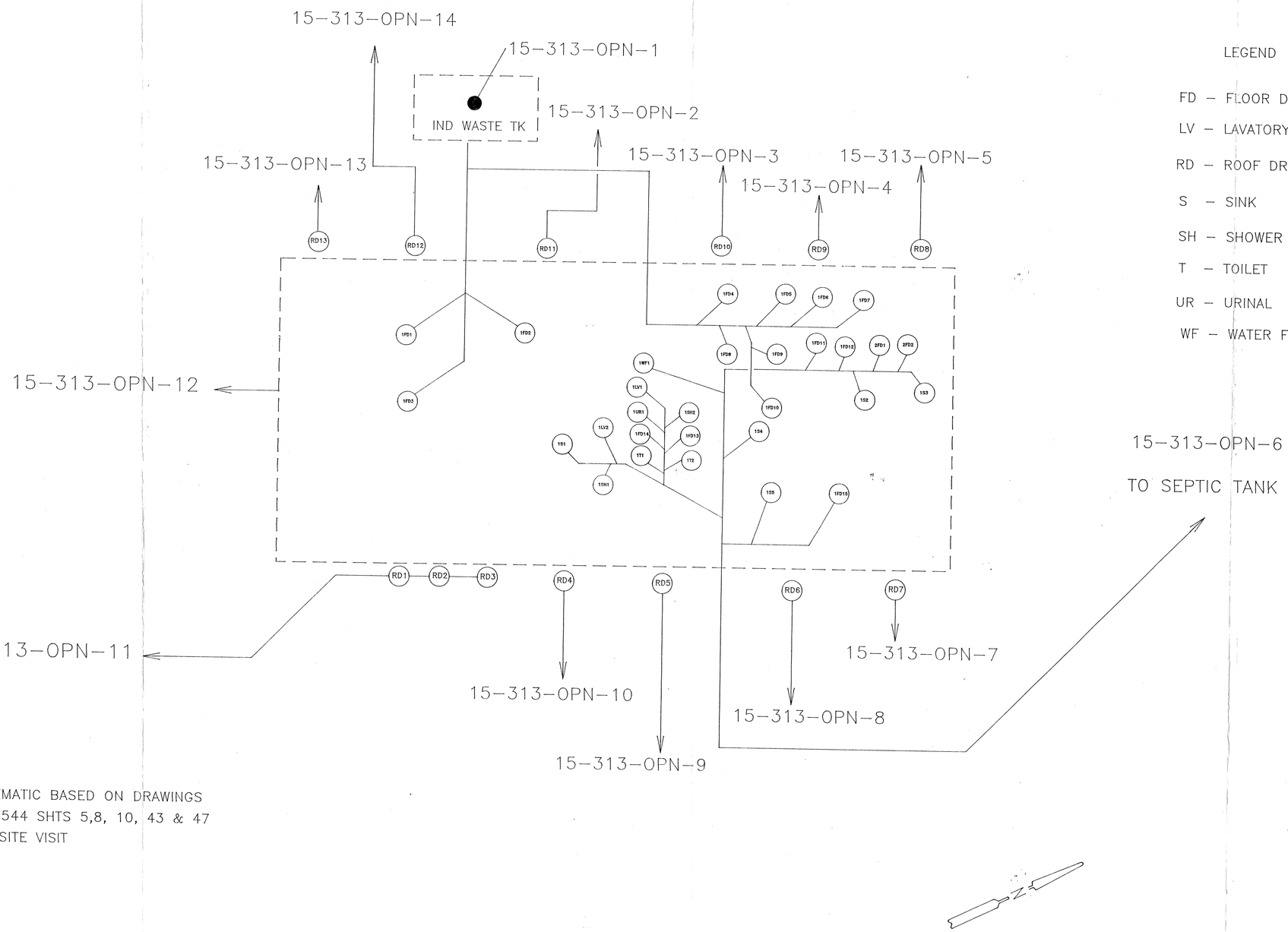

LEGEND

FD – FLOOR DRAIN
LV – LAVATORY
RD – ROOF DRAIN
S – SINK
SH – SHOWER
T – TOILET
UR – URINAL
WF – WATER FOUNTAIN

NOTES

NOTE 1: SCHEMATIC BASED ON DRAWINGS C-45544 SHTS 5,8, 10, 43 & 47 AND SITE VISIT

SANTA FE ENGINEERING, LTD.			
TA 15-313 BUILDING DRAIN SCHEMATIC		DRAWN	PEB
		DESIGN	PEB
		CHECKED	LBA
		DATE	6/10/92
SUBMITTED	RECOMMENDED	APPROVED	
Los Alamos	Los Alamos National Laboratory Los Alamos, New Mexico 87545	SHEET	OF
CLASSIFICATION	REVIEWER	DATE	
REQUESTING DIVISION	LAB JOB NO.	DRAWING NO.	REV.
REQUESTING GROUP	11056-24	FIGURE 20	

15218-B