WASTEWATER STREAM CHARACTERIZATION FOR TA 3-46, 47, 49, 166, 170, 192, 194, 195, 223, 285, 334, 476, 533, 1532, 1544, 1650, 1942, 1967, 2033, 2034, 2039, 2040, 2041 & 2131

at

Los Alamos National Laboratory

ENVIRONMENTAL STUDY

CHARACTERIZATION REPORT # 58

REVISION NO. _____

REVISION DATE: _____

COPY NO. _____

ISSUED TO: _____

_____

ENVIRON

Los Al

Los Al

15282

SION

atory

37545

Los Alamos

Los Alamos National Laboratory is operated by the University o

t of Energy

EXECUTIVE SUMMARY

Structures 46, 47, 49, 166, 170, 192, 194, 195, 223, 285, 334, 476, 533, 1532, 1544, 1650, 1942, 1967, 2033, 2034, 2039, 2040, 2041 and 2131 in TA-3 were visited to document all drain piping and to make permitting recommendations. The number of pipes found exiting the buildings are as follows:

1) from 3-170: one outfall from a sewage ejector, collecting sanitary wastewater from two rest rooms, discharging to the TA-46 sanitary waste treatment plant, one permitted once-through compressor cooling outfall (04A-094), and twenty seven miscellaneous outfall pipes for discharge of liquid waste and gas venting;

2) from 3-223: two sanitary outfalls discharging to a sewage lift station which pumps to the TA-46 sanitary treatment plant, one sanitary drain overflow to the canyon, and nine miscellaneous outfall pipes for discharge of liquid waste and gas venting;

4) from 3-285: two discharges from the cooling tower, connected to the permitted outfall (03A-027) discharging to the canyon; and

4) from 3-1544: one sanitary discharge to manhole 606 which collects sanitary wastewater to the TA-46 sanitary wastewater treatment plant.

EPA Forms 2C have been prepared for the 3-285 cooling tower discharge (03A-027) and for the 3-170 compressor once-through cooling water discharge (04A-094), and are included in Appendix 3.

Recommendations for repiping are provided to allow outfall consolidation to minimize permit maintenance requirements and to bring the facility into compliance with the Laboratory's NPDES Permit.

A waste stream database has been prepared listing wastewater type and flowrate for each outfall.

TABLE OF CONTENTS

1.0 INTRODUCTION 1

2.0 FIELD INVESTIGATION 3

3.0 RECOMMENDATIONS FOR BUILDING 3-170 4

3.1 Outfall 3-170-OPN-1 4
3.2 Outfall 3-170-OPN-2 4
3.3 Outfalls 3-170-OPN-3, 3-170-OPN-13 and 3-170-OPN-15 5
3.4 Outfalls 3-170-OPN-4, 3-170-OPN-16, 3-170-OPN-21, 3-170-OPN-22, 3-170-OPN-23, 3-170-OPN-25, 3-170-OPN-26 and 3-170-OPN-28 5
3.5 Outfalls 3-170-OPN-5, 3-170-OPN-9, 3-170-OPN-11 and 3-170-OPN-29 5
3.6 Outfalls 3-170-OPN-6, 3-170-OPN-7 and 3-170-OPN-27 5
3.7 Outfalls 3-170-OPN-8, 3-170-OPN-18 and 3-170-OPN-19 6
3.8 Outfalls 3-170-OPN-10 and 3-170-OPN-24 6
3.9 Outfall 3-170-OPN-12 6
3.10 Outfall 3-170-OPN-14 and 3-170-OPN-20 6
3.11 Outfall 3-170-OPN-17 6

4.0 RECOMMENDATIONS FOR BUILDING 3-223 6

4.1 Outfall 3-223-OPN-1 7
4.2 Outfall 3-223-OPN-2 7
4.3 Outfall 3-223-OPN-3 7
4.4 Outfalls 3-223-OPN-4, 3-223-OPN-7, 3-223-OPN-8 and 3-223-OPN-10 7
4.5 Outfall 3-223-OPN-5 7
4.6 Outfall 3-223-OPN-6 8
4.7 Outfall 3-223-OPN-9 8
4.8 Outfall 3-223-OPN-11 8
4.9 Outfall 3-223-OPN-12 8

5.0 RECOMMENDATIONS FOR COOLING TOWER 3-285 9

5.1 Outfall 3-285-OPN-1 9
5.2 Outfall 3-285-OPN-2 9

6.0 RECOMMENDATIONS FOR BUILDING 3-1544 9

7.0 RECOMMENDATIONS FOR BUILDINGS WITHOUT DRAINS 10

8.0 CONCLUSION 11

APPENDICES

Appendix 1 - DRAIN SUMMARY TABLES
Appendix 2 - WASTE STREAM CHARACTERIZATION DATABASE
Appendix 3 - EPA FORMS
Appendix 4 - DYE STUDY INFORMATION
Appendix 5 - DRAIN SCHEMATICS

LIST OF TABLES

1. SUMMARY OF ABBREVIATIONS

2. 3-170 DRAIN SUMMARY

3. 3-223 DRAIN SUMMARY

4. 3-285 DRAIN SUMMARY

5. 3-1544 DRAIN SUMMARY

6. NON-DRAIN RECOMMENDATIONS

LIST OF FIGURES

1. TA-3 SANITARY TREATMENT PLANT PARTIAL SITE PLAN

2. 3-170 DRAIN SCHEMATIC

3. 3-170 BUILDING OUTFALL DIAGRAM

4. 3-223 DRAIN SCHEMATIC

5. 3-285 DRAIN SCHEMATIC

6. 3-1544 BUILDING DRAIN SCHEMATIC

1.0 INTRODUCTION

During December, 1992, Scott Carson of Santa Fe Engineering (SFE) toured the buildings and structures at the inactive sanitary treatment plant at TA-3, shown in Figure 1 in Appendix 5. The purpose of this study is to identify building drain piping, locate outfalls which discharge into the environment and to characterize the wastewater flows and sources existing at the time of the visit. This report will not reflect any subsequent changes in piping or operation. The Waste Stream Characterization Policy of September 10, 1992 was followed for this study. The following tasks were performed for this purpose:

1. Building drains and all piping exiting the building were identified and laid out in schematic form;

2. Wastewater sources were identified at each drain, and the wastewater was characterized according to flow rate and quality. The location of outfalls and their potential sources of discharge were determined. Potential pollutants were also noted; and

3. Potential problems were identified and recommendations were made for repiping, floor drain plugging and spill containment where deemed appropriate.

No unpermitted discharges were observed. EPA Forms 2C were prepared for the compressor once through cooling water discharge in building 3-170 (EPA Outfall 04A-094) and the 3-285 cooling tower blowdown (EPA Outfall 03A-027). An EPA Form 2C for the Laboratory's sanitary treatment plant discharge (01S), shown on Figure 1, is included in this report and is contained in Appendix 3.

The field investigation proceeded using Los Alamos National Laboratory (LANL) drawings and drain schematic drawings prepared by SFE to aid in field investigation to insure that all pipes exiting the building were documented. The following information was used to define drain piping and characterize the wastewater streams:

1. Laboratory engineering drawings were used to prepare the SFE drain piping schematic. The Solid Waste Stream Characterization conducted by IT Corporation was reviewed. The National Pollutant Discharge Elimination System (NPDES) Permit, the 1990 NPDES Permit Application submitted by LANL in September, 1990, the latest Federal Facilities Compliance Agreement (FFCA) between the Department of Energy (DOE) and the Environmental Protection Agency (EPA) and the Administrative Order (AO) Docket Number VI-92-1306 were used for reference;

2. SFE verified drain piping by visual inspection and dye checking; and

3. A site visit was performed to verify both LANL drawings and the SFE drain schematic and to identify potential outfall pipes exiting the building. The visit entailed a room by room inspection of wastewater sources and drains and interviews with site personnel to assist in waste stream characterization.

2.0 FIELD INVESTIGATION

The pipes exiting the building have been assigned an Outlet Piping Number. The four part number, sequentially, identifies the Technical Area where the pipe is located, the building from which the pipe discharges, the letters OPN to indicate that it is an outlet pipe number and the unique number for the pipe. The piping exiting the building will be labeled for easy identification in the future.

Each drain has a unique identification number. Each number consists of three parts. The first part is the floor the drain is on. The second part has letters that indicate the drain type (abbreviations used are summarized in Table 1). The final part is a unique number for each drain. For example, the floor drain numbering on the first floor would start with 1FD1.

The function of each pipe exiting from buildings is listed in Appendix 1 in Tables 2 through 5 with an abbreviations list in Table 1 and non-drain recommendations in Table 6. Appendix 2 contains the waste stream characterization database output, listing wastewater source, flow rates and periodicity information for each outfall drain. Appendix 3 contains completed EPA Forms 2C for EPA outfalls 03A027, 04A094 and 01S. Appendix 4 provides information about the dye study of building drains. Building outfall diagrams and Flow schematics of the drains from each building are attached in Appendix 5 as Figures 2 through 6.

3.0 RECOMMENDATIONS FOR BUILDING 3-170

Table 2 is a summary of the building drains and Figure 2 is a schematic of the building drain piping. Figure 3 is a schematic of the building outfalls. Recommendations for this building are outlined in Table 2. An EPA form was prepared for outfall 04A094 from this building, and is included in Appendix 3.

The maximum daily flow rate reported in the Form 2C (Appendix 3) for outfall 04A094 was determined from July, 1989 flow sampling. Johnny Lovato, MAT-14, at 3-170 indicated that the cooling water is discharged when the compressor operates, approximately 8 hours per day, 1-2 days per month.

3.1 Outfall 3-170-OPN-1

Outfall 3-170-OPN-1 is a sanitary outfall, collecting drainage from sanitary drains, as shown in Figure 2 and outlined in Table 2. The outfall receives sanitary wastewater from a sump pump in 3-170, and connects to the splitter box at the TA-3 sanitary treatment plant, as shown in Figure 1. Figure 1, Detail-1, shows the diversion of sanitary wastewater to the new TA-46 Sanitary Waste Systems Collection (SWSC) plant. No recommendations or permitting are recommended for this outfall.

3.2 Outfall 3-170-OPN-2

Outfall 3-170-OPN-2 drains a single floor drain in the mechanical room (102) shown in Figure 2. The floor drain receives reverse osmosis equipment backflushing, fire system drainage and once through cooling water from a compressor in room 101A. The drain piping discharges to the canyon northeast of the building and is permitted as EPA 04A094. Recommendation is made to replace the once through cooling source with a closed-loop, recirculating cooling system, and pipe the floor drain to the sanitary sewer.

The permitted outfall can then be eliminated. An EPA Form 2C has been prepared for this outfall and is included in Appendix 3.

3.3 Outfalls 3-170-OPN-3, 3-170-OPN-13 and 3-170-OPN-15

These outfalls appear to be abandoned gas vents, disconnected inside the building. Recommendation is made for their removal. No permitting is recommended for these outfalls.

3.4 Outfalls 3-170-OPN-4, 3-170-OPN-16, 3-170-OPN-21, 3-170-OPN-22, 3-170-OPN-23, 3-170-OPN-25, 3-170-OPN-26 and 3-170-OPN-28

These outfalls are gas vents and do not discharge liquid. Outfall 3-170-OPN-22 is a gas manifold pressure relief valve (PRV). No changes or permitting are recommended for these outfalls.

3.5 Outfalls 3-170-OPN-5, 3-170-OPN-9, 3-170-OPN-11 and 3-170-OPN-29

These outfalls are fire system test drains. No changes are recommended, however fire system test blowdowns are recommended to be included in the Laboratory's Notice of Intent (NOI) to discharge.

3.6 Outfalls 3-170-OPN-6, 3-170-OPN-7 and 3-170-OPN-27

These outfalls are outdoor tank drains for liquid nitrogen (3-170-OPN-6 and 3-170-OPN-7) and liquid argon (3-170-OPN-27). Outfall 3-170-OPN-7 is from a supply pipe PRV. No changes or permitting are recommended for these outfalls.

3.7 Outfalls 3-170-OPN-8, 3-170-OPN-18 and 3-170-OPN-19

These outfall pipes are compressor inlets and do not discharge liquid. No changes or permitting are recommended for these outfalls. No EPA forms were prepared.

3.8 Outfalls 3-170-OPN-10 and 3-170-OPN-24

These outfall pipes are vacuum pump exhausts and do not discharge liquid. No changes or permitting are recommended for these outfalls. No EPA forms were prepared.

3.9 Outfall 3-170-OPN-12

Outfall 3-170-OPN-12 is a fire system auxiliary supply connection. No changes or permitting are recommended for this outfall pipe. No EPA forms were prepared.

3.10 Outfall 3-170-OPN-14 and 3-170-OPN-20

Outfalls 3-170-OPN-14 and 3-170-OPN-20 are compressor tank discharges. Recommendation is made to containerize the discharge. No permitting is recommended for these outfalls. No EPA forms were prepared.

3.11 Outfall 3-170-OPN-17

Outfall 3-170-OPN-17 is a back flow preventer drain. No changes are recommended, however back flow preventer drains are recommended to be included in the Laboratory's NOI. No EPA forms were prepared.

4.0 RECOMMENDATIONS FOR BUILDING 3-223

Table 3 is a summary of the building drains and Figure 4 is a schematic of the building drain piping. No permitting is recommended for outfalls from this building.

4.1 Outfall 3-223-OPN-1

Outfall 3-223-OPN-1 has two components, 3-223-OPN-1A and 3-223-OPN-1B, which collect drainage from the two bathrooms in building 3-223. This outfall discharges into a sewage lift station which is pumped to the TA-3 sanitary treatment plant splitter box, as shown in Figure 1. No changes or permitting are recommended for this outfall. No EPA forms were prepared.

4.2 Outfall 3-223-OPN-2

Outfall 3-223-OPN-2 is an air conditioner condensate discharge. No changes are recommended, however air conditioner condensate drains are recommended to be included in the Laboratory's NOI.

4.3 Outfall 3-223-OPN-3

Outfall 3-223-OPN-3 is an air compressor tank drain. Recommendation is made to containerize the discharge. No permitting is recommended for this outfall. No EPA forms were prepared.

4.4 Outfalls 3-223-OPN-4, 3-223-OPN-7, 3-223-OPN-8 and 3-223-OPN-10

These outfalls are fire system test drains. No changes are recommended, however fire system test drains are recommended to be included in the Laboratory's NOI. No EPA forms were prepared.

4.5 Outfall 3-223-OPN-5

Outfall 3-223-OPN-5 is an eye wash drain. It discharges into a steam condensate pit outside the building, as shown in Figure 4. This discharge should be included in the Laboratory's NOI.

4.6 Outfall 3-223-OPN-6

Outfall 3-223-OPN-6 has two components, 3-223-OPN-6A and 3-223-OPN-6B, which drain to the sewage lift station, as shown in Figure 4. The equipment drain shown is an ice machine drain. No changes or permitting are recommended for this outfall and no EPA forms were prepared.

4.7 Outfall 3-223-OPN-9

Outfall 3-223-OPN-9 is a fire system auxiliary supply connection. No changes or permitting are recommended for this outfall pipe. No EPA forms were prepared.

4.8 Outfall 3-223-OPN-11

Outfall 3-223-OPN-11 is a hot water tank PRV. No changes are recommended, however hot water tank PRV discharges are recommended to be included in the Laboratory's NOI. No permitting is recommended and no EPA forms were prepared.

4.9 Outfall 3-223-OPN-12

Outfall 3-223-OPN-12 is an overflow drain from the sewage lift station. The drain line was not field verified, but should be located for removal. Untreated sanitary wastewater cannot be discharged to daylight under any circumstances, so recommendation is made to remove this outfall. Dual sump pumps have been installed in the lift station sump, however a high level alarm may be deemed necessary to indicate possible sump pump failure. No permitting is recommended for this outfall and no EPA forms were prepared.

5.0 RECOMMENDATIONS FOR COOLING TOWER 3-285

Table 4 is a summary of the cooling tower drains and Figure 5 is a schematic of the cooling tower drain piping. An EPA Form 2C has been prepared for Outfall 03A027 from this cooling tower and is included in Appendix 3.
Cooling tower blowdown rate shown in the Form 2C (Appendix 3) for outfall 03A027 is an average value for the period 4/12/90 to 12/16/92, as reported by Tom Brunton, ENG-6.

5.1 Outfall 3-285-OPN-1

Outfall 3-285-OPN-1 is the blowdown from cooling tower 3-285 which handles the cooling load for building 3-132. The discharge is to EPA permitted outfall 03A027 at the nearby canyon. A Form 2C was prepared for this outfall and is included in Appendix 3. No changes are recommended for this outfall.

5.2 Outfall 3-285-OPN-2

Outfall 3-285-OPN-2 drains the fire protection valve pit and the chemical addition pit, as shown in Figure 5. The discharge is to EPA permitted outfall 03A027 at the nearby canyon. A Form 2C was prepared for this outfall and is included in Appendix 3. No changes are recommended for this outfall.

6.0 RECOMMENDATIONS FOR BUILDING 3-1544

Building 3-1544 is a transportable building used as office space. Outfall 3-1544-OPN-1 is a single pipe discharging to the sanitary sewer from the transportable, as shown in Figure 6, collecting wastewater from the bathroom and a single water fountain inside. Table 5 is a summary of the building drains and Figure 6 is a schematic of the building drain piping. No permitting is

recommended for outfall 3-1544-OPN-1. No EPA forms were prepared.

7.0 RECOMMENDATIONS FOR BUILDINGS WITHOUT DRAINS

The following buildings covered in this report were found not to contain drains:

Building Number	Description
46	Final Settling Tank (Inactive)
47	Trickling Filter (Inactive)
49	Imhoff Tank (Inactive)
166	Pump House
192	Imhoff Tank (Inactive)
194	Trickling Filter
195	Secondary Clarifier
334	Storage Shed
476	Toxic Storage Shed
533	Storage Shed
1532	Transportable (Office)
1650	Flammable Gas Storage
1942	Storage Shed
1967	Storage Shed
2033	Transportainer
2034	Transportainer
2039	Storage Shed
2040	Transportainer
2041	Transportainer
2131	Gas Valve Shed

8.0 CONCLUSION

This document provides the information to characterize Structures 46, 47, 49, 166, 170, 192, 194, 195, 223, 285, 334, 476, 533, 1532, 1544, 1650, 1942, 1967, 2033, 2034, 2039, 2040, 2041 and 2131. An NPDES permit application form has been prepared for the discharge from cooling tower 285 (03A027), and from Building 3-170 (04A094). The outfalls from these buildings are itemized below.

EPA Form 2C:

1. 3-170-OPN-2 2. 3-285-OPN-1 3. 3-285-OPN-2

No NPDES permits are required for the following outfalls:

Discharges to the sanitary sewer:

1. 3-170-OPN-1 2. 3-223-OPN-1A 3. 3-223-OPN-1B
4. 3-223-OPN-6A 5. 3-223-OPN-6B 6. 3-1544-OPN-1

Gas vents:

1. 3-170-OPN-4 2. 3-170-OPN-16 3. 3-170-OPN-21
4. 3-170-OPN-22 5. 3-170-OPN-23 6. 3-170-OPN-25
7. 3-170-OPN-26 8. 3-170-OPN-28

Disconnected pipes:

1. 3-170-OPN-3 2. 3-170-OPN-13 3. 3-170-OPN-15

Fire system test discharges:

1. 3-170-OPN-5 2. 3-170-OPN-9 3. 3-170-OPN-11
4. 3-170-OPN-29 5. 3-223-OPN-4 6. 3-223-OPN-7
7. 3-223-OPN-8 8. 3-223-OPN-10

Fire system supply connections:

1. 3-170-OPN-12 2. 3-223-OPN-9

Miscellaneous outfall pipes requiring a Laboratory NOI:

1. 3-170-OPN-17 2. 3-223-OPN-2 3. 3-223-OPN-5
4. 3-223-OPN-11

Miscellaneous outfall pipes not requiring a Laboratory NOI:

1. 3-170-OPN-6	2. 3-170-OPN-7	3. 3-170-OPN-8
4. 3-170-OPN-10	5. 3-170-OPN-14	6. 3-170-OPN-18
7. 3-170-OPN-19	8. 3-170-OPN-20	9. 3-170-OPN-24
10. 3-170-OPN-27	11. 3-223-OPN-2	12. 3-223-OPN-12

Buildings without drains:

1. 3-46	2. 3-47	3. 3-49	4. 3-166
5. 3-192	6. 3-194	7. 3-195	8. 3-334
9. 3-476	10. 3-533	11. 3-1532	12. 3-1650
13. 3-1942	14. 3-1967	15. 3-2033	16. 3-2034
17. 3-2039	18. 3-2040	19. 3-2041	20. 3-2131

Recommendations are outlined in Tables 2 through 6 in Appendix 1. The major recommendations summarized here:

1. Install a closed-loop recirculating cooling system to handle the compressor cooling load at building 3-170, repipe the floor drain (1FD1) to sanitary and eliminate Outfall 04A094.

2. Eliminate the sanitary overflow drain line to the canyon (3-223-OPN-12) at building 3-223.

3. Avoid unrecorded discharges from cooling towers by installing flow meters in the cooling tower discharge line.

TABLE 1:

SUMMARY OF ABBREVIATIONS

ABBREVIATION	MEANING
AC	AIR CONDITIONER
CD	CUP DRAIN
ED	EQUIPMENT DRAIN
EW	EYE WASH
FD	FLOOR DRAIN
LV	LAVATORY
NOI	NOTICE OF INTENT
PRV	PRESS. RELIEF VALVE
SD	SINK DRAIN
SH	SHOWER DRAIN
TL	TOILET
UR	URINAL
WF	WATER FOUNTAIN
WH	WATER HEATER

TABLE 2: TA 3-170 DRAIN SUMMARY

OUTFALL NUMBER	ID NUMBER	ROOM ACTIVITY	ROOM NUMBER	STATUS OR RECOMMENDATIONS	EPA FORM
3-170-OPN-01 SANITARY	1LV1	WOMEN'S RESTROOM	104B	NO CHANGE	NO
	1LV2	MEN'S REST ROOM	103C	NO CHANGE	
	1SD1	WASH AREA	104A	NO CHANGE	
	1SD2	MEN'S DRESSING ROOM	103D	NO CHANGE	
	1SH1	WOMEN'S RESTROOM	104B	NO CHANGE	
	1SH2	MEN'S REST ROOM	103C	NO CHANGE	
	1TL1	WOMEN'S RESTROOM	104B	NO CHANGE	
	1TL2	MEN'S REST ROOM	103C	NO CHANGE	
	1UR1	MEN'S REST ROOM	103C	NO CHANGE	
3-170-OPN-02 04A-094	1FD1	MECHANICAL ROOM	102	INSTALL RECIRC. COOLER, PIPE FLOOR DRAIN TO SANITARY, AND ELIMINATE PERMIT	YES
3-170-OPN-03	N/A	MECHANICAL ROOM	104B	REMOVE	NO
3-170-OPN-04	N/A	REST ROOM AREA	104B	NO CHANGE	NO
3-170-OPN-05	N/A	REST ROOM AREA	104A	NOI	NO
3-170-OPN-06	N/A	OUTSIDE	N/A	NO CHANGE	NO
3-170-OPN-07	N/A	OUTSIDE	N/A	NO CHANGE	NO
3-170-OPN-08	N/A	COMPRESSED GAS STORAGE	103	NO CHANGE	NO
3-170-OPN-09	N/A	COMPRESSED GAS STORAGE	103	NOI	NO
3-170-OPN-10	N/A	COMPRESSED GAS STORAGE	101	NO CHANGE	NO
3-170-OPN-11	N/A	MECHANICAL ROOM	102	NOI	NO
3-170-OPN-12	N/A	MECHANICAL ROOM	102	NO CHANGE	NO
3-170-OPN-13	N/A	COMPRESSOR ROOM	101A	REMOVE	NO
3-170-OPN-14	N/A	COMPRESSOR ROOM	101A	CONTAINERIZE	NO
3-170-OPN-15	N/A	COMPRESSOR ROOM	101A	REMOVE	NO
3-170-OPN-16	N/A	COMPRESSOR ROOM	101A	NO CHANGE	NO
3-170-OPN-17	N/A	COMPRESSED GAS STORAGE	101	NOI	NO
3-170-OPN-18	N/A	COMPRESSED GAS STORAGE	101	NO CHANGE	NO
3-170-OPN-19	N/A	COMPRESSOR ROOM	101C	NO CHANGE	NO
3-170-OPN-20	N/A	COMPRESSOR ROOM	101C	CONTAINERIZE	NO
3-170-OPN-21	N/A	COMPRESSED GAS STORAGE	103	NO CHANGE	NO
3-170-OPN-22	N/A	COMPRESSED GAS STORAGE	103	NO CHANGE	NO
3-170-OPN-23	N/A	COMPRESSED GAS STORAGE	103	NO CHANGE	NO
3-170-OPN-24	N/A	COMPRESSED GAS STORAGE	103	NO CHANGE	NO
3-170-OPN-25	N/A	COMPRESSED GAS STORAGE	103	NO CHANGE	NO
3-170-OPN-26	N/A	COMPRESSED GAS STORAGE	103	NO CHANGE	NO
3-170-OPN-27	N/A	OUTSIDE	N/A	NO CHANGE	NO
3-170-OPN-28	N/A	COMPRESSED GAS STORAGE	103	NO CHANGE	NO
3-170-OPN-29	N/A	COMPRESSED GAS STORAGE	103	NOI	NO

TABLE 3: TA 3-223 DRAIN SUMMARY

OUTFALL NUMBER	ID NUMBER	ROOM ACTIVITY	ROOM NUMBER	STATUS OR RECOMMENDATIONS	EPA FORM
3-223-OPN-01A SANITARY	1LV1	MEN'S REST ROOM	113	NO CHANGE	NO
	1LV2	MEN'S REST ROOM	113	NO CHANGE	
	1LV3	MEN'S REST ROOM	113	NO CHANGE	
	1SD1	MEN'S REST ROOM	113	NO CHANGE	
	1UR1	MEN'S REST ROOM	113	NO CHANGE	
	1UR2	MEN'S REST ROOM	113	NO CHANGE	
	1UR3	MEN'S REST ROOM	113	NO CHANGE	
	1WF2	LOUNGE	106	NO CHANGE	
3-223-OPN-01B SANITARY	1SD2	WOMEN'S REST ROOM	114	NO CHANGE	NO
	1TL1	MEN'S REST ROOM	113	NO CHANGE	
	1TL2	MEN'S REST ROOM	113	NO CHANGE	
	1TL3	MEN'S REST ROOM	113	NO CHANGE	
	1TL4	MEN'S REST ROOM	113	NO CHANGE	
	1TL5	WOMEN'S REST ROOM	114	NO CHANGE	
	1WF1	LOUNGE	115	NO CHANGE	
3-223-OPN-02	N/A	A/C CONDENSATE	106	NOI	NO
3-223-OPN-03	N/A	CA TANK DRAIN	106	CONTAINERIZE	NO
3-223-OPN-04	N/A	FIRE WATER DRAIN	106	NOI	NO
3-223-OPN-05	1EW1	MACHINE SHOP	106	NOI	NO
3-223-OPN-06A SANITARY	1SD3	LOUNGE AREA	106	NO CHANGE	NO
3-223-OPN-06B SANITARY	1ED1	LOUNGE AREA	106	NO CHANGE	NO
3-223-OPN-07	N/A	FIRE WATER DRAIN	106	NOI	NO
3-223-OPN-08	N/A	FIRE WATER DRAIN	106	NOI	NO
3-223-OPN-09	N/A	LOUNGE AREA	106	NO CHANGE	NO
3-223-OPN-10	N/A	FIRE WATER DRAIN	106	NOI	NO
3-223-OPN-11	N/A	WATER HEATER PRV	N/A	NOI	NO
3-223-OPN-12 DAYLIGHT	N/A	SANITARY LIFT STATION OVERFLOW	N/A	ELIMINATE/PUT HIGH LEVEL ALARM ON SUMP	NO

TABLE 4: TA 3-285 DRAIN SUMMARY

OUTFALL NUMBER	ID NUMBER	ROOM ACTIVITY	ROOM NUMBER	STATUS OR RECOMMENDATIONS	EPA FORM
3-285-OPN-1 03A-023	1FD1	SUMP	N/A	NO CHANGE	YES
	1FD2	SUMP	N/A	NO CHANGE	
	1FD3	SUMP	N/A	NO CHANGE	
	1FD4	SUMP	N/A	NO CHANGE	
	1ED1	SUMP	N/A	NO CHANGE	
	1ED2	SUMP	N/A	NO CHANGE	
	1ED3	SUMP	N/A	NO CHANGE	
	1ED4	SUMP	N/A	NO CHANGE	
3-285-OPN-2 03A-023	1FD5	FIRE PROTECTION VALVE PIT	N/A	NO CHANGE	YES
	1FD6	CHEMICAL ADDITION PIT	N/A	NO CHANGE	

TABLE 5: TA 3-1544 DRAIN SUMMARY

OUTFALL NUMBER	ID NUMBER	ROOM ACTIVITY	ROOM NUMBER	STATUS OR RECOMMENDATIONS	EPA FORM
3-1544-OPN-1 SANITARY	1LV1	REST ROOM	100A	NO CHANGE	NO
	1TL1	REST ROOM	100A	NO CHANGE	NO
	1WF1	CORRIDOR	N/A	NO CHANGE	NO

TABLE 6:

NON-DRAIN RECOMMENDATIONS

BUILDING	RECOMMENDATION
3-285	THE COOLING TOWER WAS BEING OVERFLOWED BY JCI PERSONNEL WHEN SITE WAS INSPECTED FOR REPORT. OPERATOR REFUSED TO EXPLAIN THE REASON FOR HIS ACTION, BUT IT WAS APPARENT THAT HE WAS BY-PASSING THE BLOW-DOWN METER TO ADD WATER TO THE SYSTEM. ENG-6 WAS INFORMED OF THIS AND INDICATED THAT JCI OFTEN OPERATES LANL COOLING TOWERS IN THIS FASHION TO BRING WATER QUALITY INTO OPERATIONAL SPECIFICATIONS. RECOMMENDATION IS MADE FOR EM-8 TO CONSIDER AN SOP TO PREVENT UNRECORDED WATER DISCHARGES.

REPORT # 58

TA	BLDG	OUTLET PIPING NO	EPA OUTFALL #	DRAIN #	ROOM #	ROOM DESCRIPTION	FLOW RATE		PERIODICITY	SEASONAL	SOURCE TYPES
3	46	3-46	ND	N/A	N/A	FINAL SETTLING TANK			NO DRAINS	No	NO FLOW
3	47	3-47	ND	N/A	N/A	TRICKLING FILTER			NO DRAINS	No	NO FLOW
3	49	3-49	ND	N/A	N/A	INHOFF TANK			NO DRAINS	No	NO FLOW
3	166	3-166	ND	N/A	N/A	PUMP HOUSE			NO DRAINS	No	NO FLOW
3	170	3-170-OPN-01	01S/SWSC	1LV1	104B	WOMEN'S RESTROOM			5 DAYS PER WEEK	No	LAVATORY
3	170	3-170-OPN-01	01S/SWSC	1LV2	103C	MEN'S REST ROOM			5 DAYS PER WEEK	No	LAVATORY
3	170	3-170-OPN-01	01S/SWSC	1SD1	104A	WASH AREA			5 DAYS PER WEEK	No	HAND WASHING
3	170	3-170-OPN-01	01S/SWSC	1SD2	103D	MEN'S DRESSING ROOM			5 DAYS PER WEEK	No	HAND WASHING
3	170	3-170-OPN-01	01S/SWSC	1SH1	104B	WOMEN'S RESTROOM			5 DAYS PER WEEK	No	SHOWER
3	170	3-170-OPN-01	01S/SWSC	1SH2	103C	MEN'S REST ROOM			5 DAYS PER WEEK	No	SHOWER
3	170	3-170-OPN-01	01S/SWSC	1TL1	104B	WOMEN'S RESTROOM			5 DAYS PER WEEK	No	TOILET
3	170	3-170-OPN-01	01S/SWSC	1TL2	103C	MEN'S REST ROOM			5 DAYS PER WEEK	No	TOILET
3	170	3-170-OPN-01	01S/SWSC	1UR1	103C	MEN'S REST ROOM			5 DAYS PER WEEK	No	URINAL
3	170	3-170-OPN-02	04A094	1FD1	102	MECHANICAL ROOM			ONCE PER YEAR	No	FIRE SYSTEM DRAIN
3	170	3-170-OPN-02	04A094	1FD1	102	MECHANICAL ROOM	10	GPD	7 DAYS PER WEEK	No	REVERSE OSMOSIS FLUSH
3	170	3-170-OPN-02	04A094	1FD1	102	MECHANICAL ROOM	1000	GPY	1-2 TIMES PER MONT	No	ONCE THRU COOLING. WTR
3	170	3-170-OPN-03	N/A	N/A	104B	MECHANICAL ROOM			NO FLOW - VENT	No	GAS VENT (DISCONNECTED)
3	170	3-170-OPN-04	ATMOSPHERE	N/A	104B	REST ROOM AREA			NO FLOW - VENT	No	GAS VENT
3	170	3-170-OPN-05	DAYLIGHT	N/A	104A	REST ROOM AREA			ONCE PER YEAR	No	SPRINKLER TEST DRAIN
3	170	3-170-OPN-06	ATMOSPHERE	N/A	N/A	OUTSIDE			FLOW IS NIL	No	NITROGEN TANK LINE DRAIN
3	170	3-170-OPN-07	ATMOSPHERE	N/A	N/A	OUTSIDE			FLOW IS NIL	No	NITROGEN TANK LINE PRV
3	170	3-170-OPN-08	N/A	N/A	103	COMPRESSED GAS STOR			NO FLOW	No	NONE - COMPRESSOR INLET
3	170	3-170-OPN-09	DAYLIGHT	N/A	103	COMPRESSED GAS STOR			ONCE PER YEAR	No	FIRE SYSTEM TEST DRAIN
3	170	3-170-OPN-10	ATMOSPHERE	N/A	101	COMPRESSED GAS STOR			NONE - GAS EXHAUS	No	VACUUM PUMP EXHAUST
3	170	3-170-OPN-11	DAYLIGHT	N/A	102	MECHANICAL ROOM			ONCE PER YEAR	No	FIRE SYSTEM TEST DRAIN
3	170	3-170-OPN-12	N/A	N/A	102	MECHANICAL ROOM			NO FLOW	No	NONE - AUX. INLET
3	170	3-170-OPN-13	N/A	N/A	101A	COMPRESSOR ROOM			NO FLOW	No	NONE - DISCONNECTED INLET
3	170	3-170-OPN-14	DAYLIGHT	N/A	101A	COMPRESSOR ROOM			FLOW IS NIL	No	COMPRESSOR AIR TANK DRAIN
3	170	3-170-OPN-15	N/A	N/A	101A	COMPRESSOR ROOM			NO FLOW	No	NONE - DISCONNECTED INLET
3	170	3-170-OPN-16	ATMOSPHERE	N/A	101A	COMPRESSOR ROOM			NO FLOW	No	NONE - COMPRESSOR INLET
3	170	3-170-OPN-17	DAYLIGHT	N/A	101	COMPRESSED GAS STOR			FLOW IS NIL	No	BFP DRAIN
3	170	3-170-OPN-18	N/A	N/A	101	COMPRESSED GAS STOR			NO FLOW	No	NONE - 6" HVAC AIR INLET
3	170	3-170-OPN-19	N/A	N/A	101C	COMPRESSOR ROOM			NO FLOW	No	NONE - COMPRESSOR INLET

REPORT # 58

TA	BLDG	OUTLET PIPING NO	EPA OUTFALL #	DRAIN #	ROOM #	ROOM DESCRIPTION	FLOW RATE		PERIODICITY	SEASONAL	SOURCE TYPES
3	170	3-170-OPN-20	DAYLIGHT	N/A	101C	COMPRESSOR ROOM			FLOW IS NIL	No	COMPRESSOR TANK DRAIN
3	170	3-170-OPN-21	ATMOSPHERE	N/A	103	COMPRESSED GAS STOR			NO FLOW	No	NONE - GAS MANIFOLD VENT
3	170	3-170-OPN-22	ATMOSPHERE	N/A	103	COMPRESSED GAS STOR			NO FLOW	No	NONE - GAS MANIFOLD PRV
3	170	3-170-OPN-23	ATMOSPHERE	N/A	103	COMPRESSED GAS STOR			NO FLOW	No	NONE - NITROGEN MANIFOLD VENT
3	170	3-170-OPN-24	ATMOSPHERE	N/A	103	COMPRESSED GAS STOR			NO FLOW	No	NONE - VACUUM PUMP VENT
3	170	3-170-OPN-25	ATMOSPHERE	N/A	103	COMPRESSED GAS STOR			NO FLOW	No	NONE - ARGON GAS MANIFOLD VENT
3	170	3-170-OPN-26	ATMOSPHERE	N/A	103	COMPRESSED GAS STOR			NO FLOW	No	NONE - ARGON GAS MANIFOLD VENT
3	170	3-170-OPN-27	ATMOSPHERE	N/A	N/A	OUTSIDE			FLOW IS NIL	No	ARGON TANK DRAIN
3	170	3-170-OPN-28	ATMOSPHERE	N/A	103	COMPRESSED GAS STOR			NO FLOW	No	NONE - ARGON GAS MANIFOLD VENT
3	170	3-170-OPN-29	DAYLIGHT	N/A	103	COMPRESSED GAS STOR			ONCE PER YEAR	No	FIRE SYSTEM TEST DRAIN
3	192	3-192	ND	N/A	N/A	IMHOFF TANK			NO DRAINS	No	NO FLOW
3	194	3-194	ND	N/A	N/A	TRICKLING FILTER			NO DRAINS	No	NO FLOW
3	195	3-195	ND	N/A	N/A	SECONDARY CLARIFIER			NO DRAINS	No	NO FLOW
3	223	3-223-OPN-01A	01S/SWSC	1LV1	113	MEN'S REST ROOM			5 DAYS PER WEEK	No	LAVATORY
3	223	3-223-OPN-01A	01S/SWSC	1LV2	113	MEN'S REST ROOM			5 DAYS PER WEEK	No	LAVATORY
3	223	3-223-OPN-01A	01S/SWSC	1LV3	113	MEN'S REST ROOM			5 DAYS PER WEEK	No	LAVATORY
3	223	3-223-OPN-01A	01S/SWSC	1SD1	113	MEN'S REST ROOM			5 DAYS PER WEEK	No	HAND WASHING
3	223	3-223-OPN-01A	01S/SWSC	1UR1	113	MEN'S REST ROOM			5 DAYS PER WEEK	No	URINAL
3	223	3-223-OPN-01A	01S/SWSC	1UR2	113	MEN'S REST ROOM			5 DAYS PER WEEK	No	URINAL
3	223	3-223-OPN-01A	01S/SWSC	1UR3	113	MEN'S REST ROOM			5 DAYS PER WEEK	No	URINAL
3	223	3-223-OPN-01A	01S/SWSC	1WF2	106	LOUNGE			5 DAYS PER WEEK	No	WATER FOUNTAIN
3	223	3-223-OPN-01B	01S/SWSC	1SD2	114	WOMEN'S REST ROOM			5 DAYS PER WEEK	No	HAND WASHING
3	223	3-223-OPN-01B	01S/SWSC	1TL1	113	MEN'S REST ROOM			5 DAYS PER WEEK	No	TOILET
3	223	3-223-OPN-01B	01S/SWSC	1TL2	113	MEN'S REST ROOM			5 DAYS PER WEEK	No	TOILET
3	223	3-223-OPN-01B	01S/SWSC	1TL3	113	MEN'S REST ROOM			5 DAYS PER WEEK	No	TOILET
3	223	3-223-OPN-01B	01S/SWSC	1TL4	113	MEN'S REST ROOM			5 DAYS PER WEEK	No	TOILET
3	223	3-223-OPN-01B	01S/SWSC	1TL5	114	WOMEN'S REST ROOM			5 DAYS PER WEEK	No	TOILET
3	223	3-223-OPN-01B	01S/SWSC	1WF1	115	LOUNGE			5 DAYS PER WEEK	No	WATER FOUNTAIN
3	223	3-223-OPN-02	DAYLIGHT	N/A	106	MACHINE SHOP			FLOW IS NIL	No	AIR CONDITIONER CONDENSATE
3	223	3-223-OPN-03	DAYLIGHT	N/A	106	MACHINE SHOP			FLOW IS NIL	No	COMPRESSOR TANK DRAIN
3	223	3-223-OPN-04	DAYLIGHT	N/A	106	MACHINE SHOP			ONCE PER YEAR	No	FIRE SYSTEM TEST DRN (CAPPED)
3	223	3-223-OPN-05	STEAM PIT	1EW1	106	MACHINE SHOP			FLOW IS NIL	No	EYE WASH
3	223	3-223-OPN-06A	01S/SWSC	1SD3	106	LOUNGE AREA			5 DAYS PER WEEK	No	SANITARY WASTEWATER

REPORT # 58

TA	BLDG	OUTLET PIPING NO	EPA OUTFALL #	DRAIN #	ROOM #	ROOM DESCRIPTION	FLOW RATE		PERIODICITY	SEASONAL	SOURCE TYPES
3	223	3-223-OPN-06B	01S/SWSC	1ED1	106	LOUNGE AREA			FLOW IS NIL	No	ICE MACHINE
3	223	3-223-OPN-07	DAYLIGHT	N/A	106	LOUNGE AREA			ONCE PER YEAR	No	FIRE SYSTEM TEST DRAIN
3	223	3-223-OPN-08	DAYLIGHT	N/A	106	LOUNGE AREA			ONCE PER YEAR	No	FIRE SYSTEM TEST DRAIN
3	223	3-223-OPN-09	N/A	N/A	106	LOUNGE AREA			NO FLOW	No	NONE - AUX. WATER SUPPLY
3	223	3-223-OPN-10	DAYLIGHT	N/A	106	LOUNGE AREA			ONCE PER YEAR	No	FIRE SYSTEM TEST DRAIN
3	223	3-223-OPN-11	DAYLIGHT	N/A	N/A	MEZZANINE			FLOW IS NIL	No	HOT WATER TANK PRV
3	223	3-223-OPN-12	DAYLIGHT	N/A	N/A	OUTSIDE			NO FLOW	No	REST ROOMS
3	285	3-285-OPN-1	03A027	1ED1	N/A	SUMP			FLOW IS NIL	No	COOLING TOWER BLOWDOWN
3	285	3-285-OPN-1	03A027	1ED2	N/A	SUMP			FLOW IS NIL	No	COOLING TOWER BLOWDOWN
3	285	3-285-OPN-1	03A027	1ED3	N/A	SUMP			FLOW IS NIL	No	COOLING TOWER BLOWDOWN
3	285	3-285-OPN-1	03A027	1ED4	N/A	SUMP			FLOW IS NIL	No	COOLING TOWER BLOWDOWN
3	285	3-285-OPN-1	03A027	1FD1	N/A	SUMP			7 DAYS PER WEEK	No	COOLING TOWER BLOWDOWN
3	285	3-285-OPN-1	03A027	1FD2	N/A	SUMP			7 DAYS PER WEEK	No	COOLING TOWER BLOWDOWN
3	285	3-285-OPN-1	03A027	1FD3	N/A	SUMP			7 DAYS PER WEEK	No	COOLING TOWER BLOWDOWN
3	285	3-285-OPN-1	03A027	1FD4	N/A	SUMP			7 DAYS PER WEEK	No	COOLING TOWER BLOWDOWN
3	285	3-285-OPN-2	03A027	1FD5	N/A	VALVE PIT			FLOW IS NIL	No	FIRE PROTECTION WATER
3	285	3-285-OPN-2	03A027	1FD6	N/A	CHEMICAL ADDITION PIT			FLOW IS NIL	No	VALVE LEAKAGE
3	334	3-334	ND	N/A	N/A	STORAGE SHED			NO DRAINS	No	NO FLOW
3	476	3-476	ND	N/A	N/A	TOXIC STORAGE SHED			NO DRAINS	No	NO FLOW
3	533	3-533	ND	N/A	N/A	STORAGE SHED			NO DRAINS	No	NO FLOW
3	1532	3-1532	ND	N/A	N/A	TRANSPORTABLE			NO DRAINS	No	NO FLOW
3	1544	3-1544-OPN-1	01S/SWSC	1LV1	100A	REST ROOM			5 DAYS PER WEEK	No	LAVATORY
3	1544	3-1544-OPN-1	01S/SWSC	1TL1	100A	REST ROOM			5 DAYS PER WEEK	No	TOILET
3	1544	3-1544-OPN-1	01S/SWSC	1WF1	N/A	CORRIDOR			5 DAYS PER WEEK	No	WATER FOUNTAIN
3	1650	3-1650	ND	N/A	N/A	FLAMMABLE GAS STOR.			NO DRAINS	No	NO FLOW
3	1942	3-1942	ND	N/A	N/A	STORAGE SHED			NO DRAINS	No	NO FLOW
3	1967	3-1967	ND	N/A	N/A	STORAGE SHED			NO DRAINS	No	NO FLOW
3	2033	3-2033	ND	N/A	N/A	TRANSPORTAINER			NO DRAINS	No	NO FLOW
3	2034	3-2034	ND	N/A	N/A	TRANSPORTAINER			NO DRAINS	No	NO FLOW
3	2039	3-2039	ND	N/A	N/A	STORAGE SHED			NO DRAINS	No	NO FLOW
3	2041	3-2041	ND	N/A	N/A	TRANSPORTAINER			NO DRAINS	No	NO FLOW
3	2131	3-2131	ND	N/A	N/A	GAS VALVE SHED			NO DRAINS	No	NO FLOW

Please print or type in the unshaded areas only.

EPA I.D. NUMBER (copy from Item 1 of Form 1)
NM0890010515

Form Approved
OMB No. 2040-0086
Approval expires 7-31-88

FORM 2C NPDES

EPA

U.S. ENVIRONMENTAL PROTECTION AGENCY
APPLICATION FOR PERMIT TO DISCHARGE WASTEWATER
EXISTING MANUFACTURING, COMMERCIAL, MINING AND SILVICULTURAL OPERATIONS
Consolidated Permits Program

I. OUTFALL LOCATION

For each outfall, list the latitude and longitude of its location to the nearest 15 seconds and the name of the receiving water.

A. OUTFALL NUMBER (list)	B. LATITUDE			C. LONGITUDE			D. RECEIVING WATER (name)
	1. DEG.	2. MIN.	3. SEC.	1. DEG.	2. MIN.	3. SEC.	
03A027	35	52	28	106	19	14	Tributary to Sandia Canyon, an ephemeral tributary to the Rio Grande.

II. FLOWS, SOURCES OF POLLUTION, AND TREATMENT TECHNOLOGIES

A. Attach a line drawing showing the water flow through the facility. Indicate sources of intake water, operations contributing wastewater to the effluent, and treatment units labeled to correspond to the more detailed descriptions in Item B. Construct a water balance on the line drawing by showing average flows between intakes, operations, treatment units, and outfalls. If a water balance cannot be determined *(e.g., for certain mining activities)*, provide a pictorial description of the nature and amount of any sources of water and any collection or treatment measures.

B. For each outfall, provide a description of: (1) All operations contributing wastewater to the effluent, including process wastewater, sanitary wastewater, cooling water, and storm water runoff; (2) The average flow contributed by each operation; and (3) The treatment received by the wastewater. Continue on additional sheets if necessary.

1. OUTFALL NO (list)	2. OPERATION(S) CONTRIBUTING FLOW		3. TREATMENT		
	a. OPERATION (list)	b. AVERAGE FLOW (include units)	a. DESCRIPTION	b. LIST CODES FROM TABLE 2C-1	
027	3-285-OPN-1:				
	Cooling tower blowdown	10000 GPD	None		
	3-285-OPN-2:				
	Valve pit (fire water)	Flow is nil	None		

OFFICIAL USE ONLY *(effluent guidelines sub-categories)*

CONTINUED FROM THE FRONT

C. Except for storm runoff, leaks, or spills, are any of the discharges described in Items II-A or B intermittent or seasonal?

[X] YES *(complete the following table)* [ ] NO *(go to Section III)*

1. OUTFALL NUMBER *(list)*	2. OPERATION(s) CONTRIBUTING FLOW *(list)*	3. FREQUENCY a. DAYS PER WEEK *(specify average)*	3. FREQUENCY b. MONTHS PER YEAR *(specify average)*	4. FLOW a. FLOW RATE *(in mgd)* 1. LONG TERM AVERAGE	4. FLOW a. FLOW RATE *(in mgd)* 2. MAXIMUM DAILY	4. FLOW b. TOTAL VOLUME *(specify with units)* 1. LONG TERM AVERAGE	4. FLOW b. TOTAL VOLUME *(specify with units)* 2. MAXIMUM DAILY	4. FLOW c. DURATION *(in days)*
027	Cooling Tower Blowdown	5	12	0.01	0.01	10000 GPD	10000 GPD	260

III. PRODUCTION

A. Does an effluent guideline limitation promulgated by EPA under Section 304 of the Clean Water Act apply to your facility?

[ ] YES *(complete Item III-B)* [X] NO *(to to Section IV)*

B. Are the limitations in the applicable effluent guideline expressed in terms of production *(or other measure of operation)*?

[ ] YES *(complete Item III-C)* [ ] NO *(go to Section IV)*

C. If you answered "yes" to Item III-B, list the quantity which represents an actual measurement of your level of production, expressed in the terms and units used in the applicable effluent guideline, and indicate the affected outfalls.

1. AVERAGE DAILY PRODUCTION a. QUANTITY PER DAY	b. UNITS OF MEASURE	c. OPERATION, PRODUCT, MATERIAL, ETC. *(specify)*	2. AFFECTED OUTFALLS *(list outfall numbers)*

IV. IMPROVEMENTS

A. Are you now required by any Federal, State or local authority to meet any implementation schedule for the construction, upgrading or operation of wastewater treatment equipment or practices or any other environmental programs which may affect the discharges described in this application? This includes, but is not limited to, permit conditions, administrative or enforcement orders, enforcement compliance schedule letters, stipulations, court orders, and grant or loan conditions.

[X] YES *(complete the following table)* [ ] NO *(go to Item IV-B)*

1. IDENTIFICATION OF CONDITION, AGREEMENT, ETC.	2. AFFECTED OUTFALLS a. NO.	2. AFFECTED OUTFALLS b. SOURCE OF DISCHARGE	3. BRIEF DESCRIPTION OF PROJECT	4. FINAL COMPLIANCE DATE a. REQUIRED	4. FINAL COMPLIANCE DATE b. PROJECTED
EPA Docket No. VI-92-1306		All	Complete Waste Stream Characterization surveys and implement corrective actions.	7/31/93	FY96

B. OPTIONAL: You may attach additional sheets describing any additional water pollution control programs *(or other environmental projects which may affect your discharges)* you now have underway or which you plan. Indicate whether each program is now underway or planned, and indicate your actual or planned schedules for construction. [ ] MARK "X" IF DESCRIPTION OF ADDITIONAL CONTROL PROGRAMS IS ATTACHED

 CONTINUE ON PAGE 3

CONTINUED FROM PAGE 2

EPA I.D. NUMBER (copy from Item 1 of Form 1)
NM0890010515

Form Approved.
OMB No. 2040-0086
Approval expires 7-31-88

V. INTAKE AND EFFLUENT CHARACTERISTICS

A, B, & C: See instructions before proceeding — Complete one set of tables for each outfall — Annotate the outfall number in the space provided. NOTE: Tables V-A, V-B, and V-C are included on separate sheets numbered V-1 through V-9.

D. Use the space below to list any of the pollutants listed in Table 2c-3 of the instructions, which you know or have reason to believe is discharged or may be discharged from any outfall. For every pollutant you list, briefly describe the reasons you believe it to be present and report any analytical data in your possession.

1. POLLUTANT	2. SOURCE	1. POLLUTANT	2. SOURCE
see datasheet			

VI. POTENTIAL DISCHARGES NOT COVERED BY ANALYSIS

Is any pollutant listed in Item V-C a substance or a component of a substance which you currently use or manufacture as an intermediate or final product or byproduct?

☐ YES *(list all such pollutants below)* ☒ NO *(go to Item VI-B)*

CONTINUE ON REVERSE

CONTINUED FROM THE FRONT

VII. BIOLOGICAL TOXICITY TESTING DATA

Do you have any knowledge or reason to believe that any biological test for acute or chronic toxicity has been made on any of your discharges or on a receiving water in relation to your discharge within the last 3 years?

☐ YES *(identify the test(s) and describe their purposes below)* ☒ NO *(go to Section VIII)*

VIII. CONTRACT ANALYSIS INFORMATION

Were any of the analyses reported in Item V performed by a contract laboratory or consulting firm?

☐ YES *(list the name, address, and telephone number of, and pollutants analyzed by, each such laboratory or firm below)* ☒ NO *(go to Section IX)*

A. NAME	B. ADDRESS	C. TELEPHONE *(area code & no.)*	D. POLLUTANTS ANALYZED *(list)*

IX. CERTIFICATION

I certify under penalty of law that this document and all attachments were prepared under my direction or supervision in accordance with a system designed to assure that qualified personnel properly gather and evaluate the information submitted. Based on my inquiry of the person or persons who manage the system or those persons directly responsible for gathering the information, the information submitted is, to the best of my knowledge and belief, true, accurate, and complete. I am aware that there are significant penalties for submitting false information, including the possibility of fine and imprisonment for knowing violations.

A. NAME & OFFICIAL TITLE *(type or print)*	B. PHONE NO. *(area code & no.)*
JERRY L. BELLOWS, AREA MANAGER, DOE ALLEN J. TIEDMAN, ASSOC. DIRECTOR FOR OPERATIONS	505-667-5105 505-667-9390
C. SIGNATURE	D. DATE SIGNED

Data from worst case composite.

PLEASE PRINT OR TYPE IN THE UNSHADED AREAS ONLY. You may report some or all of this information on separate sheets *(use the same format)* instead of completing these pages. SEE INSTRUCTIONS.

EPA I.D. NUMBER *(copy from Item 1 of Form 1)*: NM0890010515

Form Approved. OMB No. 2040-0086 Approval expires 7-31-88

V. INTAKE AND EFFLUENT CHARACTERISTICS *(continued from page 3 of Form 2-C)*

OUTFALL NO. 03A027

PART A - You must provide the results of at least one analysis for every pollutant in this table. Complete one table for each outfall. See instructions for additional details.

1. POLLUTANT	2. EFFLUENT a. MAXIMUM DAILY VALUE (1) CONCENTRATION	(2) MASS	b. MAXIMUM 30 DAY VALUE (if available) (1) CONCENTRATION	(2) MASS	c. LONG TERM AVRG. VALUE (if available) (1) CONCENTRATION	(2) MASS	d. NO. OF ANALYSES	3. UNITS (specify if blank) a. CONCENTRATION	b. MASS	4. INTAKE (optional) a. LONG TERM AVERAGE VALUE (1) CONCENTRATION	(2) MASS	b. NO. OF ANALYSES
a. Biochemical Oxygen Demand *(BOD)*	2.0	7.6						mg/l	g/d			
b. Chemical Oxygen Demand *(COD)*	42.0	159.0						mg/l	g/d			
c. Total Organic Carbon *(TOC)*	7.4	28.0						mg/l	g/d			
d. Total Suspended Solids *(TSS)*	7.0	26.5						mg/l	g/d			
e. Ammonia *(as N)*	< .01	< 37.850						mg/l	mg/d			
f. Flow	VALUE 1000		VALUE		VALUE			gal/day		VALUE		
g. Temperature *(winter)*	VALUE 36.9 C		VALUE		VALUE			°C		VALUE		
h. Temperature *(summer)*	VALUE		VALUE		VALUE			°C		VALUE		
i. pH	MINIMUM 6.8	MAXIMUM 8.8	MINIMUM 6.0	MAXIMUM 9.0				STANDARD UNITS				

PART B - Mark "X" in column 2-a for each pollutant you know or have reason to believe is present. Mark "X" in column 2-b for each pollutant you believe to be absent. If you mark column 2a for any pollutant which is limited either directly, or indirectly but expressly, in an effluent limitations guideline, you must provide the results of at least one analysis for that pollutant. For other pollutants for which you mark column 2a, you must provide quantitative data or an explanation of their presence in your discharge. Complete one table for each outfall. See the instructions for additional details and requirements.

1. POLLUTANT AND CAS NO. *(if available)*	2. MARK 'X' a. BELIEVED PRESENT	b. BELIEVED ABSENT	3. EFFLUENT a. MAXIMUM DAILY VALUE (1) CONCENTRATION	(2) MASS	b. MAXIMUM 30 DAY VALUE (if available) (1) CONCENTRATION	(2) MASS	c. LONG TERM AVRG. VALUE (if available) (1) CONCENTRATION	(2) MASS	d. NO. OF ANALYSES	4. UNITS a. CONCENTRATION	b. MASS	5. INTAKE (optional) a. LONG TERM AVERAGE VALUE (1) CONCENTRATION	(2) MASS	b. NO. OF ANALYSES
a. Bromide (24959-67-9)	X		3.24	12.3						mg/l	g/d			
b. Chlorine, Total Residual		X	0.0	0.0						mg/l	mg/d			
c. Color	X		10							units				
d. Fecal Coliform		X												
e. Fluoride (16984-48-8)	X		0.52	2.0						mg/l	g/d			
f. Nitrate-Nitrite *(as N)*	X		1.13	4.3						mg/l	g/d			

CONTINUE ON REVERSE

ITEM V-B CONTINUED FROM FRONT

1. POLLUTANT AND CAS NO. (if available)	2. MARK 'X' a. BELIEVED PRESENT	b. BELIEVED ABSENT	3. EFFLUENT a. MAXIMUM DAILY VALUE (1) CONCENTRATION	(2) MASS	b. MAXIMUM 30 DAY VALUE (if available) (1) CONCENTRATION	(2) MASS	c. LONG TERM AVRG. VALUE (if available) (1) CONCENTRATION	(2) MASS	d. NO. OF ANALYSES	4. UNITS a. CONCENTRATION	b. MASS	5. INTAKE (optional) a. LONG TERM AVERAGE VALUE (1) CONCENTRATION	(2) MASS	b. NO. OF ANALYSES
g. Nitrogen, Total Organic (as N)	X		2.3	8.7						mg/l	g/d			
h. Oil and Grease		X	< 1.2	< 4.5						mg/l	g/d			
i. Phosphorus (as P), Total (7723-14-0)	X		.306	1.2						mg/l	g/d			
j. Radioactivity														
(1) Alpha, Total	X		14	53.0						pCi/l	nCi/d			
(2) Beta, Total	X		6.6	25.0						pCi/l	nCi/d			
(3) Radium, Total	X													
(4) Radium 226, Total	X		0.07	0.3						pCi/l	nCi/d			
k. Sulfate (as SO_4) (14808-79-8)	X		143	541.3						mg/l	g/d			
l. Sulfide (as S)	X		70.2	265.7						mg/l	g/d			
m. Sulfite (as SO_3) (14265-45-3)	X		18.8	71.2						mg/l	g/d			
n. Surfactants	X		0.11	0.4						mg/l	g/d			
o. Aluminum, Total (7429-90-5)	X		0.06	0.2						mg/l	g/d			
p. Barium, Total (7440-39-3)	X		0.11	0.4						mg/l	g/d			
q. Boron, Total (7440-42-8)	X		0.33	1.2						mg/l	g/d			
r. Cobalt, Total (7440-48-4)		X	0.07	0.3						mg/l	g/d			
s. Iron, Total (7439-89-6)	X		1.1	4.2						mg/l	g/d			
t. Magnesium, Total (7439-95-4)	X		5.8	22.0						mg/l	g/d			
u. Molybdenum, Total (7439-98-7)	X		1.7	6.4						mg/l	g/d			
v. Manganese, Total (7439-96-5)	X		0.05	0.2						mg/l	g/d			
w. Tin, Total (7440-31-5)		X	< 0.050	< 0.2						mg/l	g/d			
x. Titanium, Total (7440-32-6)		X	< 0.004	< 15.1						mg/l	mg/d			

CONTINUE ON PAGE V - 3

EPA I.D. NUMBER (copy from Item 1 of Form 1)	OUTFALL NUMBER
NM0890010515	03A027

Form Approved.
OMB No. 2040-0086
Approval expires 7-31-88

CONTINUED FROM PAGE 3 OF FORM 2-C

PART C - If you are a primary industry and this outfall contains process wastewater, refer to Table 2c-2 in the instructions to determine which of the GC/MS fractions you must test for. Mark "X" in column 2-a for all such GC/MS fractions that apply to your industry and for ALL toxic metals, cyanides, and total phenols. If you are not required to mark column 2-a *(secondary industries, nonprocess wastewater outfalls, and nonrequired GC/MS fractions)*, mark "X" in column 2-b for each pollutant you know or have reason to believe is present. Mark "X" in column 2-c for each pollutant you believe is absent. If you mark column 2a for any pollutant, you must provide the results of at least one analysis for that pollutant. If you mark column 2b for any pollutant, you must provide the results of at least one analysis for that pollutant if you know or have reason to believe it will be discharged in concentrations of 10 ppb or greater. If you mark column 2b for acrolein, acrylonitrile, 2,4 dinitrophenol, or 2-methyl-4, 6 dinitrophenol, you must provide the results of at least one analysis for each of these pollutants which you know or have reason to believe that you discharge in concentrations of 100 ppb or greater. Otherwise, for pollutants for which you mark column 2b, you must either submit at least one analysis or briefly describe the reasons the pollutant is expected to be discharged. Note that there are 7 pages to this part; please review each carefully. Complete one table *(all 7 pages)* for each outfall. See instructions for additional details and requirements.

1. POLLUTANT AND CAS NUMBER (if available)	2. MARK 'X'			3. EFFLUENT							4. UNITS		5. INTAKE (optional)		
	a. TESTING REQUIRED	b. BELIEVED PRESENT	c. BELIEVED ABSENT	a. MAXIMUM DAILY VALUE (1) CONCENTRATION	a. MAXIMUM DAILY VALUE (2) MASS	b. MAXIMUM 30 DAY VALUE (if available) (1) CONCENTRATION	b. MAXIMUM 30 DAY VALUE (if available) (2) MASS	c. LONG TERM AVRG. VALUE (if available) (1) CONCENTRATION	c. LONG TERM AVRG. VALUE (if available) (2) MASS	d. NO. OF ANALYSES	a. CONCENTRATION	b. MASS	a. LONG TERM AVERAGE VALUE (1) CONCENTRATION	a. LONG TERM AVERAGE VALUE (2) MASS	b. NO. OF ANALYSES
METALS, CYANIDE, AND TOTAL PHENOLS															
1M. Antimony, Total (7440-36-0)			X	< 0.050	< 0.2						mg/l	g/d			
2M. Arsenic, Total (7440-38-2)		X		0.04	0.2						mg/l	g/d			
3M. Beryllium, Total, 7440-41-7)			X	< 0.1	< 0.4						mg/l	g/d			
4M. Cadmium, Total (7440-43-9)		X		.004	15.1						mg/l	mg/d			
5M. Chromium, Total (7440-47-3)		X		.260	1.0						mg/l	g/d			
6M. Copper, Total (7440-50-8)		X		0.1	0.4						mg/l	g/d			
7M. Lead, Total (7439-92-1)		X		.050	0.2						mg/l	g/d			
8M. Mercury, Total (7439-97-6)			X	< .0002	< 0.8						mg/l	mg/d			
9M. Nickel, Total (7440-02-0)		X		.28	1.1						mg/l	g/d			
10M. Selenium, Total (7782-49-2)			X	< .001	< 3.8						mg/l	mg/d			
11M. Silver, Total (7440-22-4)			X	< 0.01	< 37.9						mg/l	mg/d			
12M. Thallium, Total (7440-28-0)		X		0.51	1.9						mg/l	g/d			
13M. Zinc, Total (7440-66-6)		X		.071	0.3						mg/l	g/d			
14M. Cyanide, Total (57-12-6)		X		.033	0.1						mg/l	g/d			
15M. Phenols, Total			X	< .01	< 37.9						mg/l	mg/d			
DIOXIN															
2,3,7,8-Tetrachlorodibenzo-P-Dioxin (1764-01-6)			X	DESCRIBE RESULTS											

CONTINUE ON REVERSE

CONTINUED FROM THE FRONT

1. POLLUTANT AND CAS NUMBER (if available)	2. MARK 'X'			3. EFFLUENT							4. UNITS		5. INTAKE (optional)		
	a. TESTING REQUIRED	b. BELIEVED PRESENT	c. BELIEVED ABSENT	a. MAXIMUM DAILY VALUE		b. MAXIMUM 30 DAY VALUE (if available)		c. LONG TERM AVRG. VALUE (if available)		d. NO. OF ANALYSES	a. CONCENTRATION	b. MASS	a. LONG TERM AVERAGE VALUE		b. NO. OF ANALYSES
				(1) CONCENTRATION	(2) MASS	(1) CONCENTRATION	(2) MASS	(1) CONCENTRATION	(2) MASS				(1) CONCENTRATION	(2) MASS	
GC/MS FRACTION – VOLATILE COMPOUNDS															
1V. Acrolein (107-02-8)			X												
2V. Acrylonitrile (107-13-1)			X												
3V. Benzene (71-43-2)			X	< 0.005	< 18.9						mg/l	mg/d			
4V. Bis (Chloromethyl) Ether (542-88-1)			X												
5V. Bromoform (75-25-2)			X	< 0.005	< 18.9						mg/l	mg/d			
6V. Carbon Tetrachloride (56-23-5)			X	< 0.005	< 18.9						mg/l	mg/d			
7V. Chlorobenzene (108-90-7)			X	< 0.005	< 18.9						mg/l	mg/d			
8V. Chlorodibromomethane (124-48-1)			X	< 0.005	< 18.9						mg/l	mg/d			
9V. Chloroethane (75-00-3)			X	< 0.010	< 0.0						mg/l	mg/d			
10V. 2-Chloroethylvinyl Ether (110-75-8)			X												
11V. Chloroform (67-66-3)			X	< 0.005	< 18.9						mg/l	mg/d			
12V. Dichlorobromomethane (75-27-4)			X	< 0.005	< 18.9						mg/l	mg/d			
13V. Dichlorodifluoromethane (75-71-8)			X												
14V. 1,1-Dichloroethane (75-34-3)			X	< 0.005	< 18.9						mg/l	mg/d			
15V. 1,2-Dichloroethane (107-06-2)			X	< 0.005	< 18.9						mg/l	mg/d			
16V. 1,1-Dichloroethylene (75-35-4)			X	< 0.005	< 18.9						mg/l	mg/d			
17V. 1,2-Dichloropropane (78-87-5)			X	< 0.005	< 18.9						mg/l	kg/d			
18V. 1,3-Dichloropropylene (542-75-6)			X	< 0.005	< 18.9						mg/l	mg/d			
19V. Ethylbenzene (100-41-4)			X	< 0.005	< 18.9						mg/l	mg/d			
20V. Methyl Bromide (74-83-9)			X	< 0.010	< 37.9						mg/l	mg/d			
21V. Methyl Chloride (74-87-3)			X	< 0.010	< 37.9						mg/l	mg/d			

 CONTINUE ON PAGE V-5

CONTINUED FROM PAGE V-4

EPA I.D. NUMBER (copy from Item 1 of Form 1): NM0890010515

OUTFALL NUMBER: 03A027

OMB No. 2040-0086
Approval expires 7-31-88

1. POLLUTANT AND CAS NUMBER (if available)	2. MARK 'X' a. TESTING REQUIRED	b. BELIEVED PRESENT	c. BELIEVED ABSENT	3. EFFLUENT a. MAXIMUM DAILY VALUE (1) CONCENTRATION	(2) MASS	b. MAXIMUM 30 DAY VALUE (if available) (1) CONCENTRATION	(2) MASS	c. LONG TERM AVRG. VALUE (if available) (1) CONCENTRATION	(2) MASS	d. NO. OF ANALYSES	4. UNITS a. CONCENTRATION	b. MASS	5. INTAKE (optional) a. LONG TERM AVERAGE VALUE (1) CONCENTRATION	(2) MASS	b. NO. OF ANALYSES
GC/MS FRACTION – VOLATILE COMPOUNDS *(continued)*															
22V. Methylene Chloride (75-09-2)			X	< 0.005	< 18.9						mg/l	mg/d			
23V. 1,1,2,2-Tetrachloroethane (79-34-5)			X	< 0.005	< 18.9						mg/l	mg/d			
24V. Tetrachloroethylene (127-18-4)			X	< 0.005	< 18.9						mg/l	mg/d			
25V. Toluene (108-88-3)			X	< 0.005	< 18.9						mg/l	mg/d			
26V. 1,2-Trans-Dichloroethylene (156-60-5)			X	< 0.005	< 18.9						mg/l	mg/d			
27V. 1,1,1-Trichloroethane (71-55-6)			X	< 0.005	< 18.9						mg/l	mg/d			
28V. 1,1,2-Trichloroethane (79-00-5)			X	< 0.005	< 18.9						mg/l	mg/d			
29V. Trichloroethylene (79-01-6)			X	< 0.005	< 18.9						mg/l	mg/d			
30V. Trichlorofluoromethane (75-69-4)			X	< 0.005	< 18.9						mg/l	mg/d			
31V. Vinyl Chloride (75-01-4)			X	< 0.010	< 37.9						mg/l	mg/d			
GC/MS FRACTION – ACID COMPOUNDS															
1A. 2-Chlorophenol (95-57-8)			X	< 0.010	< 37.9						mg/l	mg/d			
2A. 2,4-Dichlorophenol (120-83-2)			X	< 0.010	< 37.9						mg/l	mg/d			
3A. 2,4-Dimethylphenol (105-67-9)			X	< 0.010	< 37.9						mg/l	mg/d			
4A. 4,6-Dinitro-O-Cresol (534-52-1)			X	< 0.010	< 37.9						mg/l	mg/d			
5A. 2,4-Dinitrophenol (51-28-5)			X	< 0.010	< 37.9						mg/l	mg/d			
6A. 2-Nitrophenol (88-75-5)			X	< 0.010	< 37.9						mg/l	mg/d			
7A. 4-Nitrophenol (100-02-7)			X	< 0.010	< 37.9						mg/l	mg/d			
8A. P-Chloro-M-Cresol (59-50-7)			X	< 0.010	< 37.9						mg/l	mg/d			
9A. Pentachlorophenol (87-86-5)			X	< 0.010	< 37.9						mg/l	mg/d			
10A. Phenol (108-95-2)			X	< 0.010	< 37.9						mg/l	mg/d			
11A. 2,4,6-Trichlorophenol (88-06-2)			X	< 0.010	< 37.9						mg/l	mg/d			

CONTINUE ON REVERSE

CONTINUED FROM THE FRONT

1. POLLUTANT AND CAS NUMBER (if available)	2. MARK 'X' a. TESTING REQUIRED	b. BELIEVED PRESENT	c. BELIEVED ABSENT	3. EFFLUENT a. MAXIMUM DAILY VALUE (1) CONCENTRATION	(2) MASS	b. MAXIMUM 30 DAY VALUE (if available) (1) CONCENTRATION	(2) MASS	c. LONG TERM AVRG. VALUE (if available) (1) CONCENTRATION	(2) MASS	d. NO. OF ANALYSES	4. UNITS a. CONCENTRATION	b. MASS	5. INTAKE (optional) a. LONG TERM AVERAGE VALUE (1) CONCENTRATION	(2) MASS	b. NO. OF ANALYSES
GC/MS FRACTION – BASE/NEUTRAL COMPOUNDS															
1B. Acenaphthene (83-32-9)			X	< 0.010	< 37.9						mg/l	mg/d			
2B. Acenaphtylene (208-96-8)			X	< 0.010	< 37.9						mg/l	mg/d			
3B. Anthracene (120-12-7)			X	< 0.010	< 37.9						mg/l	mg/d			
4B. Benzidine (92-87-5)			X	< 0.010	< 37.9						mg/l	mg/d			
5B. Benzo *(a)* Anthracene (56-55-3)			X	< 0.010	< 37.9						mg/l	mg/d			
6B. Benzo *(a)* Pyrene (50-32-8)			X	< 0.010	< 37.9						mg/l	mg/d			
7B. 3,4-Benzo-fluoranthene (205-99-2)			X	< 0.010	< 37.9						mg/l	mg/d			
8B. Benzo *(ghi)* Perylene (191-24-2)			X	< 0.010	< 37.9						mg/l	mg/d			
9B. Benzo *(k)* Fluoranthene (207-08-9)			X	< 0.010	< 37.9						mg/l	mg/d			
10B. Bis *(2-Chloro-ethoxy)* Methane (111-91-1)			X	< 0.010	< 37.9						mg/l	mg/d			
11B. Bis *(2-Chloro-ethyl)* Ether (111-44-4)			X	< 0.010	< 37.9						mg/l	mg/d			
12B. Bis *(2-Chloroiso-propyl)* Ether (102-60-1)			X	< 0.010	< 37.9						mg/l	mg/d			
13B. Bis *(2-Ethyl-hexyl)* Phthalate (117-81-7)			X	< 0.010	< 37.9						mg/l	mg/d			
14B. 4-Bromo-phenyl Phenyl Ether (101-55-3)			X	< 0.010	< 37.9						mg/l	mg/d			
15B. Butyl Benzyl Phthalate (85-68-7)			X	< 0.010	< 37.9						mg/l	mg/d			
16B. 2-Chloro-naphthalene (91-58-7)			X	< 0.010	< 37.9						mg/l	mg/d			
17B. 4-Chloro-phenyl Phenyl Ether (7005-72-3)			X	< 0.010	< 37.9						mg/l	mg/d			
18B. Chrysene (218-01-9)			X	< 0.010	< 37.9						mg/l	mg/d			
19B. Dibenzo *(a,h)* Anthracene (53-70-3)			X	< 0.010	< 37.9						mg/l	mg/d			
20B. 1,2-Dichloro-benzene (95-50-1)			X	< 0.010	< 37.9						mg/l	mg/d			
21B. 1,3-Dichloro-benzene (541-73-1)			X	< 0.010	< 37.9						mg/l	mg/d			

CONTINUE ON PAGE V-7

CONTINUED FROM PAGE V-6

EPA I.D. NUMBER (copy from Item 1 of Form 1)	OUTFALL NUMBER
NM0890010515	03A027

Form Approved.
OMB No. 2040-0086
Approval expires 7-31-88

1. POLLUTANT AND CAS NUMBER (if available)	2. MARK 'X' a. TESTING REQUIRED	b. BELIEVED PRESENT	c. BELIEVED ABSENT	3. EFFLUENT a. MAXIMUM DAILY VALUE (1) CONCENTRATION	(2) MASS	b. MAXIMUM 30 DAY VALUE (if available) (1) CONCENTRATION	(2) MASS	c. LONG TERM AVRG. VALUE (if available) (1) CONCENTRATION	(2) MASS	d. NO. OF ANALYSES	4. UNITS a. CONCENTRATION	b. MASS	5. INTAKE (optional) a. LONG TERM AVERAGE VALUE (1) CONCENTRATION	(2) MASS	b. NO. OF ANALYSES
GC/MS FRACTION – BASE/NEUTRAL COMPOUNDS (continued)															
22B. 1,4-Dichlorobenzene (106-46-7)			X	< 0.010	< 37.9						mg/l	mg/d			
23B. 3,3'-Dichlorobenzidine (91-94-1)			X	< 0.010	< 37.9						mg/l	mg/d			
24B. Diethyl Phthalate (84-66-2)			X	< 0.010	< 37.9						mg/l	mg/d			
25B. Dimethyl Phthalate (131-11-3)			X	< 0.010	< 37.9						mg/l	mg/d			
26B. Di-N-Butyl Phthalate (84-74-2)			X	< 0.010	< 37.9						mg/l	mg/d			
27B. 2,4-Dinitrotoluene (121-14-2)			X	< 0.010	< 37.9						mg/l	mg/d			
28B. 2,6-Dinitrotoluene (606-20-2)			X	< 0.010	< 37.9						mg/l	mg/d			
29B. Di-N-Octyl Phthalate (117-84-0)			X	< 0.010	< 37.9						mg/l	mg/d			
30B. 1,2-Diphenylhydrazine (as Azobenzene) (122-66-7)			X	< 0.010	< 37.9						mg/l	mg/d			
31B. Fluoranthene (206-44-0)			X	< 0.010	< 37.9						mg/l	mg/d			
32B. Fluorene (86-73-7)			X	< 0.010	< 37.9						mg/l	mg/d			
33B. Hexachlorobenzene (118-74-1)			X	< 0.010	< 37.9						mg/l	mg/d			
34B. Hexachlorobutadiene (87-68-3)			X	< 0.010	< 37.9						mg/l	mg/d			
35B. Hexachlorocyclopentadiene (77-47-4)			X	< 0.010	< 37.9						mg/l	mg/d			
36B. Hexachloroethane (67-72-1)			X	< 0.010	< 37.9						mg/l	mg/d			
37B. Indeno (1,2,3-cd) Pyrene (193-39-5)			X	< 0.010	< 37.9						mg/l	mg/d			
38B. Isophorone (78-59-1)			X	< 0.010	< 37.9						mg/l	mg/d			
39B. Naphthalene (91-20-3)			X	< 0.010	< 37.9						mg/l	mg/d			
40B. Nitrobenzene (98-95-3)			X	< 0.010	< 37.9						mg/l	mg/d			
41B. N-Nitrosodimethylamine (62-75-9)			X	< 0.010	< 37.9						mg/l	mg/d			
42B. N-Nitrosodi-N-Propylamine (621-64-7)			X	< 0.010	< 37.9						mg/l	mg/d			

CONTINUE ON REVERSE

CONTINUED FROM THE FRONT

1. POLLUTANT AND CAS NUMBER (if available)	2. MARK 'X' a. TESTING REQUIRED	b. BELIEVED PRESENT	c. BELIEVED ABSENT	3. EFFLUENT a. MAXIMUM DAILY VALUE (1) CONCENTRATION	(2) MASS	b. MAXIMUM 30 DAY VALUE (if available) (1) CONCENTRATION	(2) MASS	c. LONG TERM AVRG. VALUE (if available) (1) CONCENTRATION	(2) MASS	d. NO. OF ANALYSES	4. UNITS a. CONCENTRATION	b. MASS	5. INTAKE (optional) a. LONG TERM AVERAGE VALUE (1) CONCENTRATION	(2) MASS	b. NO. OF ANALYSES
GC/MS FRACTION – BASE/NEUTRAL COMPOUNDS *(continued)*															
43B. N-Nitrosodiphenylamine (86-30-6)			X	< 0.010	< 0.2						mg/l	g/d			
44B. Phenanthrene (85-01-8)			X	< 0.010	< 0.2						mg/l	g/d			
45B. Pyrene (129-00-0)			X	< 0.010	< 0.2						mg/l	g/d			
46B. 1,2,4-Trichlorobenzene (120-82-1)			X	< 0.010	< 0.2						mg/l	g/d			
GC/MS FRACTION – PESTICIDES															
1P. Aldrin (309-00-2)			X	< 0.06	< 1.4						ug/l	mg/d			
2P. α-BHC (319-84-6)			X	< 0.04	< 0.9						ug/l	mg/d			
3P. β-BHC (319-85-7)			X	< 0.1	< 2.3						ug/l	mg/d			
4P. γ-BHC (58-89-9)			X	< 0.03	< 0.7						ug/l	mg/d			
5P. δ-BHC (319-86-8)			X	< 0.12	< 2.7						ug/l	mg/d			
6P. Chlordane (57-74-9)			X	< 0.25	< 5.7						ug/l	mg/d			
7P. 4,4'-DDT (50-29-3)			X	< 0.06	< 1.4						ug/l	mg/d			
8P. 4,4'-DDE (72-55-9)			X	< 0.08	< 1.8						ug/l	mg/d			
9P. 4,4'-DDD (72-54-8)			X	< 0.08	< 1.8						ug/l	mg/d			
10P. Dieldrin (60-57-1)			X	< 0.08	< 1.8						ug/l	mg/d			
11P. α-Endosulfan (115-29-7)			X	< 0.05	< 1.1						ug/l	mg/d			
12P. β-Endosulfan (115-29-7)			X	< 0.08	< 1.8						ug/l	mg/d			
13P. Endosulfan Sulfate (1031-07-8)			X	< 0.09	< 2.0						ug/l	mg/d			
14P. Endrin (72-20-8)			X	< 0.06	< 1.4						ug/l	mg/d			
15P. Endrin Aldehyde (7421-93-4)			X	< 0.62	< 14.1						ug/l	mg/d			
16P. Heptachlor (76-44-8)			X	< 0.03	< 0.7						ug/l	mg/d			

CONTINUE ON PAGE V-9

CONTINUED FROM PAGE V-8

EPA I.D. NUMBER (copy from Item I of Form 1)	OUTFALL NUMBER
NM0890010515	03A027

Form Approved.
OMB No. 2040-0086
Approval expires 7-31-88

1. POLLUTANT AND CAS NUMBER (if available)	2. MARK 'X' a. TESTING REQUIRED	b. BELIEVED PRESENT	c. BELIEVED ABSENT	3. EFFLUENT a. MAXIMUM DAILY VALUE (1) CONCENTRATION	(2) MASS	b. MAXIMUM 30 DAY VALUE (if available) (1) CONCENTRATION	(2) MASS	c. LONG TERM AVRG. VALUE (if available) (1) CONCENTRATION	(2) MASS	d. NO. OF ANALYSES	4. UNITS a. CONCENTRATION	b. MASS	5. INTAKE (optional) a. LONG TERM AVERAGE VALUE (1) CONCENTRATION	(2) MASS	b. NO. OF ANALYSES
GC/MS FRACTION – PESTICIDES *(continued)*															
17P. Heptachlor Epoxide (1024-57-3)			X	< 0.08	< 1.8						ug/l	mg/d			
18P. PCB-1242 (53469-21-9)			X	< 0.71	< 16.1						ug/l	mg/d			
19P. PCB-1254 (11097-69-1)			X	< 0.71	< 16.1						ug/l	mg/d			
20P. PCB-1221 (11104-28-2)			X	N.D.											
21P. PCB-1232 (11141-16-5)			X	N.D.											
22P. PCB-1248 (12672-29-6)			X	N.D.											
23P. PCB-1260 (11096-82-5)			X	< 0.71	< 16.1						ug/l	mg/d			
24P. PCB-1016 (12674-11-2)			X	N.D.											
25P. Toxaphene (8001-35-2)			X	< 2.5	< 56.8						ug/l	mg/d			

☆U.S. GOVERNMENT PRINTING OFFICE : 1986 O - 491-191 (46116)

03A027

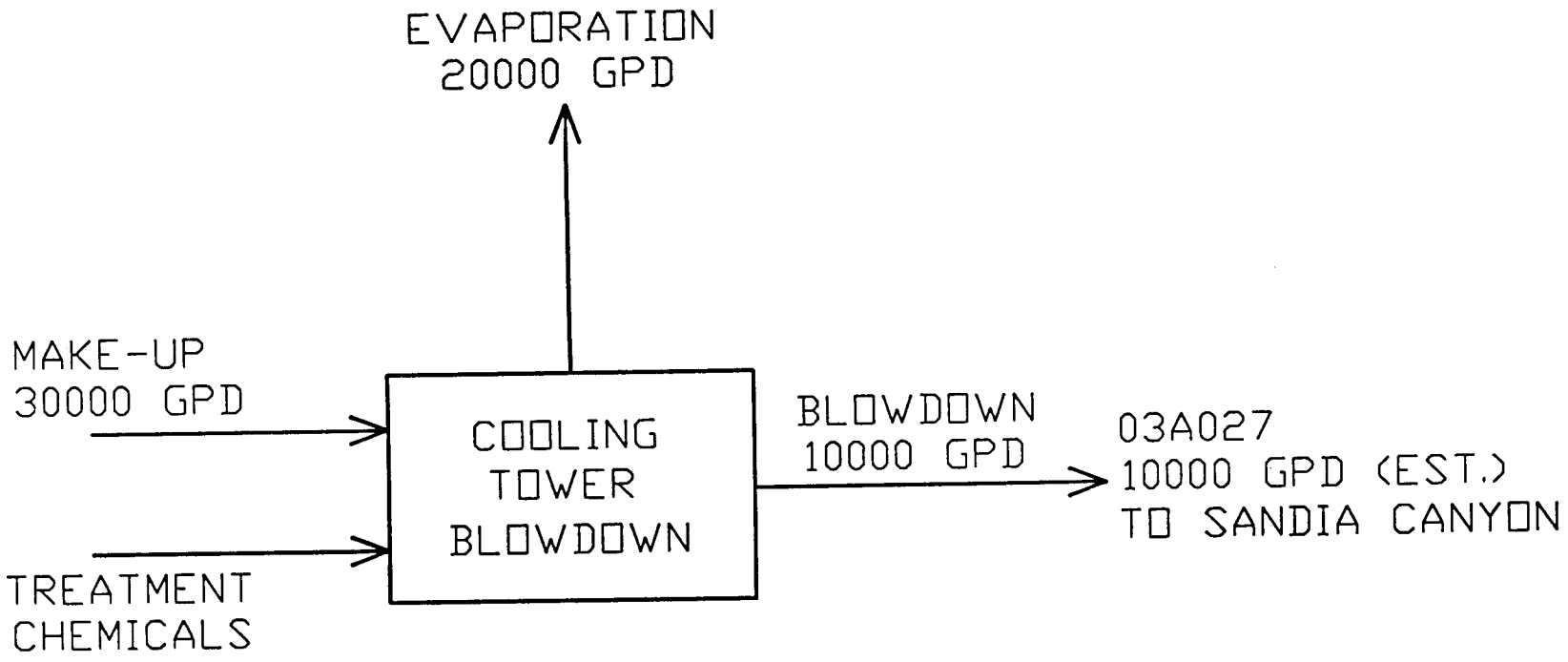
EVAPORATION
20000 GPD
MAKE-UP
30000 GPD
TREATMENT
CHEMICALS
COOLING
TOWER
BLOWDOWN
BLOWDOWN
10000 GPD
03A027
10000 GPD (EST.)
TO SANDIA CANYON

Please print or type in the unshaded areas only.

EPA I.D. NUMBER (copy from Item 1 of Form 1)
NM0890010515

Form Approved.
OMB No. 2040-0086
Approval expires 7-31-88

FORM 2C NPDES

EPA

U.S. ENVIRONMENTAL PROTECTION AGENCY
APPLICATION FOR PERMIT TO DISCHARGE WASTEWATER
EXISTING MANUFACTURING, COMMERCIAL, MINING AND SILVICULTURAL OPERATIONS
Consolidated Permits Program

I. OUTFALL LOCATION

For each outfall, list the latitude and longitude of its location to the nearest 15 seconds and the name of the receiving water.

A. OUTFALL NUMBER (list)	B. LATITUDE			C. LONGITUDE			D. RECEIVING WATER (name)
	1. DEG.	2. MIN.	3. SEC.	1. DEG.	2. MIN.	3. SEC.	
04A094	35	52	25	106	18	55	Tributary to Sandia Canyon, an ephemeral tributary to the Rio Grande

II. FLOWS, SOURCES OF POLLUTION, AND TREATMENT TECHNOLOGIES

A. Attach a line drawing showing the water flow through the facility. Indicate sources of intake water, operations contributing wastewater to the effluent, and treatment units labeled to correspond to the more detailed descriptions in Item B. Construct a water balance on the line drawing by showing average flows between intakes, operations, treatment units, and outfalls. If a water balance cannot be determined *(e.g., for certain mining activities)*, provide a pictorial description of the nature and amount of any sources of water and any collection or treatment measures.

B. For each outfall, provide a description of: (1) All operations contributing wastewater to the effluent, including process wastewater, sanitary wastewater, cooling water, and storm water runoff; (2) The average flow contributed by each operation; and (3) The treatment received by the wastewater. Continue on additional sheets if necessary.

1. OUTFALL NO. (list)	2. OPERATION(S) CONTRIBUTING FLOW		3. TREATMENT		
	a. OPERATION (list)	b. AVERAGE FLOW (include units)	a. DESCRIPTION	b. LIST CODES FROM TABLE 2C-1	
094	3-140-OPN-2				
	Non-contact cooling water	1100 GPD	None		

OFFICIAL USE ONLY *(effluent guidelines sub-categories)*

CONTINUE ON REVERSE

CONTINUED FROM THE FRONT

C. Except for storm runoff, leaks, or spills, are any of the discharges described in Items II-A or B intermittent or seasonal?

☒ YES *(complete the following table)* ☐ NO *(go to Section III)*

1. OUTFALL NUMBER *(list)*	2. OPERATION(s) CONTRIBUTING FLOW *(list)*	3. FREQUENCY a. DAYS PER WEEK *(specify average)*	3. FREQUENCY b. MONTHS PER YEAR *(specify average)*	4. FLOW a. FLOW RATE *(in mgd)* 1. LONG TERM AVERAGE	4. FLOW a. FLOW RATE *(in mgd)* 2. MAXIMUM DAILY	4. FLOW b. TOTAL VOLUME *(specify with units)* 1. LONG TERM AVERAGE	4. FLOW b. TOTAL VOLUME *(specify with units)* 2. MAXIMUM DAILY	4. FLOW c. DURATION *(in days)*
04A094	Non-contact cooling water	5	12	.0011	.002	1100 GPD	2000 GPD	260 DAY/YR

III. PRODUCTION

A. Does an effluent guideline limitation promulgated by EPA under Section 304 of the Clean Water Act apply to your facility?

☐ YES *(complete Item III-B)* ☒ NO *(to Section IV)*

B. Are the limitations in the applicable effluent guideline expressed in terms of production *(or other measure of operation)*?

☐ YES *(complete Item III-C)* ☐ NO *(go to Section IV)*

C. If you answered "yes" to Item III-B, list the quantity which represents an actual measurement of your level of production, expressed in the terms and units used in the applicable effluent guideline, and indicate the affected outfalls.

1. AVERAGE DAILY PRODUCTION a. QUANTITY PER DAY	b. UNITS OF MEASURE	c. OPERATION, PRODUCT, MATERIAL, ETC. *(specify)*	2. AFFECTED OUTFALLS *(list outfall numbers)*

IV. IMPROVEMENTS

A. Are you now required by any Federal, State or local authority to meet any implementation schedule for the construction, upgrading or operation of wastewater treatment equipment or practices or any other environmental programs which may affect the discharges described in this application? This includes, but is not limited to, permit conditions, administrative or enforcement orders, enforcement compliance schedule letters, stipulations, court orders, and grant or loan conditions.

☐ YES *(complete the following table)* ☐ NO *(go to Item IV-B)*

1. IDENTIFICATION OF CONDITION, AGREEMENT, ETC.	2. AFFECTED OUTFALLS a. NO.	2. AFFECTED OUTFALLS b. SOURCE OF DISCHARGE	3. BRIEF DESCRIPTION OF PROJECT	4. FINAL COMPLIANCE DATE a. REQUIRED	4. FINAL COMPLIANCE DATE b. PROJECTED
EPA Docket No. VI-92-1306		All	Complete Waste Stream Characterization surveys and implement corrective actions.	7/31/93	FY96

B. OPTIONAL: You may attach additional sheets describing any additional water pollution control programs *(or other environmental projects which may affect your discharges)* you now have underway or which you plan. Indicate whether each program is now underway or planned, and indicate your actual or planned schedules for construction. ☐ MARK "X" IF DESCRIPTION OF ADDITIONAL CONTROL PROGRAMS IS ATTACHED

CONTINUE ON PAGE 3

04A094

CONTINUED FROM PAGE 2

EPA I.D. NUMBER (copy from Item 1 of Form 1)
NM0890010515

Form Approved.
OMB No. 2040-0086
Approval expires 7-31-88

V. INTAKE AND EFFLUENT CHARACTERISTICS

A, B, & C: See instructions before proceeding — Complete one set of tables for each outfall — Annotate the outfall number in the space provided. NOTE: Tables V-A, V-B, and V-C are included on separate sheets numbered V-1 through V-9.

D. Use the space below to list any of the pollutants listed in Table 2c-3 of the instructions, which you know or have reason to believe is discharged or may be discharged from any outfall. For every pollutant you list, briefly describe the reasons you believe it to be present and report any analytical data in your possession.

1. POLLUTANT	2. SOURCE	1. POLLUTANT	2. SOURCE
Discharge is consistent with 04A category outfall. See attached datasheets for analysis of 04A category outfall sample analysis. Please refer to monghly discharge monitoring reports for outfall sample data.			

VI. POTENTIAL DISCHARGES NOT COVERED BY ANALYSIS

Is any pollutant listed in Item V-C a substance or a component of a substance which you currently use or manufacture as an intermediate or final product or byproduct?

☐ YES *(list all such pollutants below)* ☐ NO *(go to Item VI-B)*

04A094

CONTINUED FROM THE FRONT

VII. BIOLOGICAL TOXICITY TESTING DATA

Do you have any knowledge or reason to believe that any biological test for acute or chronic toxicity has been made on any of your discharges or on a receiving water in relation to your discharge within the last 3 years?

☐ YES *(identify the test(s) and describe their purposes below)* ☐ NO *(go to Section VIII)*

VIII. CONTRACT ANALYSIS INFORMATION

Were any of the analyses reported in Item V performed by a contract laboratory or consulting firm?

☐ YES *(list the name, address, and telephone number of, and pollutants analyzed by, each such laboratory or firm below)* ☒ NO *(go to Section IX)*

A. NAME	B. ADDRESS	C. TELEPHONE *(area code & no.)*	D. POLLUTANTS ANALYZED *(list)*

IX. CERTIFICATION

I certify under penalty of law that this document and all attachments were prepared under my direction or supervision in accordance with a system designed to assure that qualified personnel properly gather and evaluate the information submitted. Based on my inquiry of the person or persons who manage the system or those persons directly responsible for gathering the information, the information submitted is, to the best of my knowledge and belief, true, accurate, and complete. I am aware that there are significant penalties for submitting false information, including the possibility of fine and imprisonment for knowing violations.

A. NAME & OFFICIAL TITLE *(type or print)*	B. PHONE NO. *(area code & no.)*
JERRY L. BELLOWS, AREA MANAGER, DOE	505-667-5105
DENNIS J. ERICKSON, DIVISION DIRECTOR, ES&H DIVISION	505-667-9390
C. SIGNATURE	D. DATE SIGNED

PLEASE PRINT OR TYPE IN THE UNSHADED AREAS ONLY. You may report some or all of this information on separate sheets *(use the same format)* instead of completing these pages. SEE INSTRUCTIONS.

EPA I.D. NUMBER *(copy from Item 1 of Form 1)*: NM0890010515

Form Approved. OMB No. 2040-0086 Approval expires 7-31-88

OUTFALL NO. 04A094

V. INTAKE AND EFFLUENT CHARACTERISTICS *(continued from page 3 of Form 2-C)*

PART A - You must provide the results of at least one analysis for every pollutant in this table. Complete one table for each outfall. See instructions for additional details.

1. POLLUTANT	2. EFFLUENT a. MAXIMUM DAILY VALUE (1) CONCENTRATION	(2) MASS	b. MAXIMUM 30 DAY VALUE *(if available)* (1) CONCENTRATION	(2) MASS	c. LONG TERM AVRG. VALUE *(if available)* (1) CONCENTRATION	(2) MASS	d. NO. OF ANALYSES	3. UNITS *(specify if blank)* a. CONCENTRATION	b. MASS	4. INTAKE *(optional)* a. LONG TERM AVERAGE VALUE (1) CONCENTRATION	(2) MASS	b. NO. OF ANALYSES
a. Biochemical Oxygen Demand *(BOD)*	< 2.0	< 8.3						mg/l	g/d			
b. Chemical Oxygen Demand *(COD)*	< 10.0	< 41.6						mg/l	g/d			
c. Total Organic Carbon *(TOC)*	0.6	2.5						mg/l	g/d			
d. Total Suspended Solids *(TSS)*	18.0	74.9						mg/l	g/d			
e. Ammonia *(as N)*	< 0.1	< 0.416						mg/l	g/d			
f. Flow	VALUE 1100		VALUE		VALUE			gal/day		VALUE		
g. Temperature *(winter)*	VALUE 13.9		VALUE		VALUE			°C		VALUE		
h. Temperature *(summer)*	VALUE N/A		VALUE		VALUE			°C		VALUE		
i. pH	MINIMUM 8.45	MAXIMUM 8.80	MINIMUM 8.3	MAXIMUM 8.9				STANDARD UNITS				

PART B - Mark "X" in column 2-a for each pollutant you know or have reason to believe is present. Mark "X" in column 2-b for each pollutant you believe to be absent. If you mark column 2a for any pollutant which is limited either directly, or indirectly but expressly, in an effluent limitations guideline, you must provide the results of at least one analysis for that pollutant. For other pollutants for which you mark column 2a, you must provide quantitative data or an explanation of their presence in your discharge. Complete one table for each outfall. See the instructions for additional details and requirements.

1. POLLUTANT AND CAS NO. *(if available)*	2. MARK 'X' a. BELIEVED PRESENT	b. BELIEVED ABSENT	3. EFFLUENT a. MAXIMUM DAILY VALUE (1) CONCENTRATION	(2) MASS	b. MAXIMUM 30 DAY VALUE *(if available)* (1) CONCENTRATION	(2) MASS	c. LONG TERM AVRG. VALUE *(if available)* (1) CONCENTRATION	(2) MASS	d. NO. OF ANALYSES	4. UNITS a. CONCENTRATION	b. MASS	5. INTAKE *(optional)* a. LONG TERM AVERAGE VALUE (1) CONCENTRATION	(2) MASS	b. NO. OF ANALYSES
a. Bromide (24959-67-9)		X	< 0.5	< 2.1						mg/l	g/d			
b. Chlorine, Total Residual	X		0.05	0.2						mg/l	g/d			
c. Color	X		7.0							units				
d. Fecal Coliform		X												
e. Fluoride (16984-48-8)	X		0.21	0.9						mg/l	g/d			
f. Nitrate-Nitrite *(as N)*	X		0.304	1.3						mg/l	g/d			

CONTINUE ON REVERSE

ITEM V-B CONTINUED FROM FRONT

1. POLLUTANT AND CAS NO. (if available)	2. MARK 'X' a. BELIEVED PRESENT	2. MARK 'X' b. BELIEVED ABSENT	3. EFFLUENT a. MAXIMUM DAILY VALUE (1) CONCENTRATION	a. MAXIMUM DAILY VALUE (2) MASS	b. MAXIMUM 30 DAY VALUE (if available) (1) CONCENTRATION	b. MAXIMUM 30 DAY VALUE (2) MASS	c. LONG TERM AVRG. VALUE (if available) (1) CONCENTRATION	c. LONG TERM AVRG. VALUE (2) MASS	d. NO. OF ANALYSES	4. UNITS a. CONCENTRATION	4. UNITS b. MASS	5. INTAKE (optional) a. LONG TERM AVERAGE VALUE (1) CONCENTRATION	5. INTAKE (optional) a. LONG TERM AVERAGE VALUE (2) MASS	5. INTAKE (optional) b. NO. OF ANALYSES
g. Nitrogen, Total Organic (as N)		X	< 0.5	< 2.1						mg/l	g/d			
h. Oil and Grease		X	< 1.05	< 4.4						mg/l	g/d			
i. Phosphorus (as P), Total (7723-14-0)	X		0.05	0.2						mg/l	g/d			
j. Radioactivity														
(1) Alpha, Total	X		0.1	0.4						pCi/l	nCi/d			
(2) Beta, Total	X		6.6	27.5						pCi/l	nCi/d			
(3) Radium, Total	X													
(4) Radium 226, Total	X		0.06	0.2						pCi/l	nCi/d			
k. Sulfate (as SO_4) (14808-79-8)	X		3.16	13.2						mg/l	g/d			
l. Sulfide (as S)		X		0.0						mg/l	mg/d			
m. Sulfite (as SO_3) (14265-45-3)		X	< 0.05	< 0.2						mg/l	g/d			
n. Surfactants		X	< 0.1	< 0.4						mg/l	g/d			
o. Aluminum, Total (7429-90-5)		X	< 0.04	< 0.2						mg/l	g/d			
p. Barium, Total (7440-39-3)	X		0.03	0.1						mg/l	g/d			
q. Boron, Total (7440-42-8)	X		0.02	83.3						mg/l	mg/d			
r. Cobalt, Total (7440-48-4)		X	< 0.1	< 0.4						mg/l	g/d			
s. Iron, Total (7439-89-6)	X		0.41	1.7						mg/l	g/d			
t. Magnesium, Total (7439-95-4)	X		2.5	10.4						mg/l	g/d			
u. Molybdenum, Total (7439-98-7)		X	< 0.02	< 83.3						mg/l	mg/d			
v. Manganese, Total (7439-96-5)	X		0.01	41.6						mg/l	mg/d			
w. Tin, Total (7440-31-5)		X	< 0.050	< 0.2						mg/l	g/d			
x. Titanium, Total (7440-32-6)		X	< 0.004	< 16.7						mg/l	mg/d			

CONTINUE ON PAGE V-3

EPA I.D. NUMBER (copy from Item 1 of Form 1)	OUTFALL NUMBER
NM0890010515	04A094

Form Approved.
OMB No. 2040-0086
Approval expires 7-31-88

CONTINUED FROM PAGE 3 OF FORM 2-C

PART C - If you are a primary industry and this outfall contains process wastewater, refer to Table 2c-2 in the instructions to determine which of the GC/MS fractions you must test for. Mark "X" in column 2-a for all such GC/MS fractions that apply to your industry and for ALL toxic metals, cyanides, and total phenols. If you are not required to mark column 2-a *(secondary industries, nonprocess wastewater outfalls, and nonrequired GC/MS fractions)*, mark "X" in column 2-b for each pollutant you know or have reason to believe is present. Mark "X" in column 2-c for each pollutant you believe is absent. If you mark column 2a for any pollutant, you must provide the results of at least one analysis for that pollutant. If you mark column 2b for any pollutant, you must provide the results of at least one analysis for that pollutant if you know or have reason to believe it will be discharged in concentrations of 10 ppb or greater. If you mark column 2b for acrolein, acrylonitrile, 2,4 dinitrophenol, or 2-methyl-4, 6 dinitrophenol, you must provide the results of at least one analysis for each of these pollutants which you know or have reason to believe that you discharge in concentrations of 100 ppb or greater. Otherwise, for pollutants for which you mark column 2b, you must either submit at least one analysis or briefly describe the reasons the pollutant is expected to be discharged. Note that there are 7 pages to this part; please review each carefully. Complete one table *(all 7 pages)* for each outfall. See instructions for additional details and requirements.

1. POLLUTANT AND CAS NUMBER (if available)	2. MARK 'X'			3. EFFLUENT							4. UNITS		5. INTAKE (optional)		
	a. TESTING REQUIRED	b. BELIEVED PRESENT	c. BELIEVED ABSENT	a. MAXIMUM DAILY VALUE (1) CONCENTRATION	a. MAXIMUM DAILY VALUE (2) MASS	b. MAXIMUM 30 DAY VALUE (if available) (1) CONCENTRATION	b. MAXIMUM 30 DAY VALUE (if available) (2) MASS	c. LONG TERM AVRG. VALUE (if available) (1) CONCENTRATION	c. LONG TERM AVRG. VALUE (if available) (2) MASS	d. NO. OF ANALYSES	a. CONCENTRATION	b. MASS	a. LONG TERM AVERAGE VALUE (1) CONCENTRATION	a. LONG TERM AVERAGE VALUE (2) MASS	b. NO. OF ANALYSES
METALS, CYANIDE, AND TOTAL PHENOLS															
1M. Antimony, Total (7440-36-0)			X	< 0.050	< 0.2						mg/l	g/d			
2M. Arsenic, Total (7440-38-2)		X		0.002	8.3						mg/l	mg/d			
3M. Beryllium, Total, 7440-41-7)			X	< 0.001	< 4.2						mg/l	mg/d			
4M. Cadmium, Total (7440-43-9)			X	< 0.010	< 41.6						mg/l	mg/d			
5M. Chromium, Total (7440-47-3)		X		0.040	0.2						mg/l	g/d			
6M. Copper, Total (7440-50-8)		X		0.031	0.1						mg/l	g/d			
7M. Lead, Total (7439-92-1)			X	< 0.050	< 0.2						mg/l	g/d			
8M. Mercury, Total (7439-97-6)			X	< 0.0002	< 0.8						mg/l	mg/d			
9M. Nickel, Total (7440-02-0)		X		0.06	0.2						mg/l	g/d			
10M. Selenium, Total (7782-49-2)			X	< 0.001	< 4.2						mg/l	mg/d			
11M. Silver, Total (7440-22-4)			X	< 0.010	< 41.6						mg/l	mg/d			
12M. Thallium, Total (7440-28-0)			X	< 0.4	< 1.7						mg/l	g/d			
13M. Zinc, Total (7440-66-6)		X		0.043	0.2						mg/l	g/d			
14M. Cyanide, Total (57-12-5)			X	< 0.01	< 41.6						mg/l	mg/d			
15M. Phenols, Total			X	< 0.01	< 41.6						mg/l	mg/d			
DIOXIN															
2,3,7,8-Tetrachlorodibenzo-P-Dioxin (1764-01-6)			X	DESCRIBE RESULTS											

CONTINUE ON REVERSE

1. POLLUTANT AND CAS NUMBER (if available)	2. MARK 'X'			3. EFFLUENT							4. UNITS		5. INTAKE (optional)		
	a. TESTING REQUIRED	b. BELIEVED PRESENT	c. BELIEVED ABSENT	a. MAXIMUM DAILY VALUE		b. MAXIMUM 30 DAY VALUE (if available)		c. LONG TERM AVRG. VALUE (if available)		d. NO. OF ANALYSES	a. CONCENTRATION	b. MASS	a. LONG TERM AVERAGE VALUE		b. NO. OF ANALYSES
				(1) CONCENTRATION	(2) MASS	(1) CONCENTRATION	(2) MASS	(1) CONCENTRATION	(2) MASS				(1) CONCENTRATION	(2) MASS	
GC/MS FRACTION – VOLATILE COMPOUNDS															
1V. Acrolein (107-02-8)			X												
2V. Acrylonitrile (107-13-1)			X												
3V. Benzene (71-43-2)			X	< 0.005	< 20.8						mg/l	mg/d			
4V. Bis (Chloromethyl) Ether (542-88-1)			X												
5V. Bromoform (75-25-2)			X	< 0.005	< 20.8						mg/l	mg/d			
6V. Carbon Tetrachloride (56-23-5)			X	< 0.005	< 20.8						mg/l	mg/d			
7V. Chlorobenzene (108-90-7)			X	< 0.005	< 20.8						mg/l	mg/d			
8V. Chlorodibromomethane (124-48-1)			X	< 0.005	< 20.8						mg/l	mg/d			
9V. Chloroethane (75-00-3)			X	< 0.010	< 0.0						mg/l	mg/d			
10V. 2-Chloroethylvinyl Ether (110-75-8)			X												
11V. Chloroform (67-66-3)			X	< 0.005	< 20.8						mg/l	mg/d			
12V. Dichlorobromomethane (75-27-4)			X	< 0.005	< 20.8						mg/l	mg/d			
13V. Dichlorodifluoromethane (75-71-8)			X												
14V. 1,1-Dichloroethane (75-34-3)			X	< 0.005	< 20.8						mg/l	mg/d			
15V. 1,2-Dichloroethane (107-06-2)			X	< 0.005	< 20.8						mg/l	mg/d			
16V. 1,1-Dichloroethylene (75-35-4)			X	< 0.005	< 20.8						mg/l	mg/d			
17V. 1,2-Dichloropropane (78-87-5)			X	< 0.005	< 20.8						mg/l	kg/d			
18V. 1,3-Dichloropropylene (542-75-6)			X	<	< 0.0						mg/l	mg/d			
19V. Ethylbenzene (100-41-4)			X	< 0.005	< 20.8						mg/l	mg/d			
20V. Methyl Bromide (74-83-9)			X	< 0.010	< 41.6						mg/l	mg/d			
21V. Methyl Chloride (74-87-3)			X	< 0.010	< 41.6						mg/l	mg/d			

CONTINUE ON PAGE V-5

CONTINUED FROM PAGE V-4

EPA I.D. NUMBER (copy from Item 1 of Form 1): NM0890010515
OUTFALL NUMBER: 04A094

OMB No. 2040-0086
Approval expires 7-31-88

1. POLLUTANT AND CAS NUMBER (if available)	2. MARK 'X' a. TESTING REQUIRED	b. BELIEVED PRESENT	c. BELIEVED ABSENT	3. EFFLUENT a. MAXIMUM DAILY VALUE (1) CONCENTRATION	(2) MASS	b. MAXIMUM 30 DAY VALUE (if available) (1) CONCENTRATION	(2) MASS	c. LONG TERM AVRG. VALUE (if available) (1) CONCENTRATION	(2) MASS	d. NO. OF ANALYSES	4. UNITS a. CONCENTRATION	b. MASS	5. INTAKE (optional) a. LONG TERM AVERAGE VALUE (1) CONCENTRATION	(2) MASS	b. NO. OF ANALYSES
GC/MS FRACTION – VOLATILE COMPOUNDS *(continued)*															
22V. Methylene Chloride (75-09-2)			X	< 0.005	< 20.8						mg/l	mg/d			
23V. 1,1,2,2-Tetrachloroethane (79-34-5)			X	< 0.005	< 20.8						mg/l	mg/d			
24V. Tetrachloroethylene (127-18-4)			X	< 0.005	< 20.8						mg/l	mg/d			
25V. Toluene (108-88-3)			X	< 0.005	< 20.8						mg/l	mg/d			
26V. 1,2-Trans-Dichloroethylene (156-60-5)			X	< 0.005	< 20.8						mg/l	mg/d			
27V. 1,1,1-Trichloroethane (71-55-6)			X	< 0.005	< 20.8						mg/l	mg/d			
28V. 1,1,2-Trichloroethane (79-00-5)			X	< 0.005	< 20.8						mg/l	mg/d			
29V. Trichloroethylene (79-01-6)			X	< 0.005	< 20.8						mg/l	mg/d			
30V. Trichlorofluoromethane (75-69-4)			X	< 0.005	< 20.8						mg/l	mg/d			
31V. Vinyl Chloride (75-01-4)			X	< 0.010	< 41.6						mg/l	mg/d			
GC/MS FRACTION – ACID COMPOUNDS															
1A. 2-Chlorophenol (95-57-8)			X	< 0.010	< 41.6						mg/l	mg/d			
2A. 2,4-Dichlorophenol (120-83-2)			X	< 0.010	< 41.6						mg/l	mg/d			
3A. 2,4-Dimethylphenol (105-67-9)			X	< 0.010	< 41.6						mg/l	mg/d			
4A. 4,6-Dinitro-O-Cresol (534-52-1)			X	< 0.010	< 41.6						mg/l	mg/d			
5A. 2,4-Dinitrophenol (51-28-5)			X	< 0.010	< 41.6						mg/l	mg/d			
6A. 2-Nitrophenol (88-75-5)			X	< 0.010	< 41.6						mg/l	mg/d			
7A. 4-Nitrophenol (100-02-7)			X	< 0.010	< 41.6						mg/l	mg/d			
8A. P-Chloro-M-Cresol (59-50-7)			X	< 0.010	< 41.6						mg/l	mg/d			
9A. Pentachlorophenol (87-86-5)			X	< 0.010	< 41.6						mg/l	mg/d			
10A. Phenol (108-95-2)			X	< 0.010	< 41.6						mg/l	mg/d			
11A. 2,4,6-Trichlorophenol (88-06-2)			X	< 0.010	< 41.6						mg/l	mg/d			

CONTINUE ON REVERSE

CONTINUED FROM THE FRONT

1. POLLUTANT AND CAS NUMBER (if available)	2. MARK 'X'			3. EFFLUENT							4. UNITS		5. INTAKE (optional)		
	a. TESTING REQUIRED	b. BELIEVED PRESENT	c. BELIEVED ABSENT	a. MAXIMUM DAILY VALUE		b. MAXIMUM 30 DAY VALUE (if available)		c. LONG TERM AVRG. VALUE (if available)		d. NO. OF ANALYSES	a. CONCENTRATION	b. MASS	a. LONG TERM AVERAGE VALUE		b. NO. OF ANALYSES
				(1) CONCENTRATION	(2) MASS	(1) CONCENTRATION	(2) MASS	(1) CONCENTRATION	(2) MASS				(1) CONCENTRATION	(2) MASS	
GC/MS FRACTION – BASE/NEUTRAL COMPOUNDS															
1B. Acenaphthene (83-32-9)			X	< 0.010	< 41.6						mg/l	mg/d			
2B. Acenaphtylene (208-96-8)			X	< 0.010	< 41.6						mg/l	mg/d			
3B. Anthracene (120-12-7)			X	< 0.010	< 41.6						mg/l	mg/d			
4B. Benzidine (92-87-5)			X	< 0.010	< 41.6						mg/l	mg/d			
5B. Benzo *(a)* Anthracene (56-55-3)			X	< 0.010	< 41.6						mg/l	mg/d			
6B. Benzo *(a)* Pyrene (50-32-8)			X	< 0.010	< 41.6						mg/l	mg/d			
7B. 3,4-Benzo-fluoranthene (205-99-2)			X	< 0.010	< 41.6						mg/l	mg/d			
8B. Benzo *(ghi)* Perylene (191-24-2)			X	< 0.010	< 41.6						mg/l	mg/d			
9B. Benzo *(k)* Fluoranthene (207-08-9)			X	< 0.010	< 41.6						mg/l	mg/d			
10B. Bis *(2-Chloro-ethoxy)* Methane (111-91-1)			X	< 0.010	< 41.6						mg/l	mg/d			
11B. Bis *(2-Chloro-ethyl)* Ether (111-44-4)			X	< 0.010	< 41.6						mg/l	mg/d			
12B. Bis *(2-Chloroiso-propyl)* Ether (102-60-1)			X	< 0.010	< 41.6						mg/l	mg/d			
13B. Bis *(2-Ethyl-hexyl)* Phthalate (117-81-7)			X	< 0.010	< 41.6						mg/l	mg/d			
14B. 4-Bromo-phenyl Phenyl Ether (101-55-3)			X	< 0.010	< 41.6						mg/l	mg/d			
15B. Butyl Benzyl Phthalate (85-68-7)			X	< 0.010	< 41.6						mg/l	mg/d			
16B. 2-Chloro-naphthalene (91-58-7)			X	< 0.010	< 41.6						mg/l	mg/d			
17B. 4-Chloro-phenyl Phenyl Ether (7005-72-3)			X	< 0.010	< 41.6						mg/l	mg/d			
18B. Chrysene (218-01-9)			X	< 0.010	< 41.6						mg/l	mg/d			
19B. Dibenzo *(a,h)* Anthracene (53-70-3)			X	< 0.010	< 41.6						mg/l	mg/d			
20B. 1,2-Dichloro-benzene (95-50-1)			X	< 0.010	< 41.6						mg/l	mg/d			
21B. 1,3-Dichloro-benzene (541-73-1)			X	< 0.010	< 41.6						mg/l	mg/d			

CONTINUE ON PAGE V-7

CONTINUED FROM PAGE V-6

EPA I.D. NUMBER (copy from Item 1 of Form 1)	OUTFALL NUMBER
NM0890010515	04A094

Form Approved.
OMB No. 2040-0086
Approval expires 7-31-88

1. POLLUTANT AND CAS NUMBER (if available)	2. MARK 'X' a. TESTING REQUIRED	b. BELIEVED PRESENT	c. BELIEVED ABSENT	3. EFFLUENT a. MAXIMUM DAILY VALUE (1) CONCENTRATION	(2) MASS	b. MAXIMUM 30 DAY VALUE (if available) (1) CONCENTRATION	(2) MASS	c. LONG TERM AVRG. VALUE (if available) (1) CONCENTRATION	(2) MASS	d. NO. OF ANALYSES	4. UNITS a. CONCENTRATION	b. MASS	5. INTAKE (optional) a. LONG TERM AVERAGE VALUE (1) CONCENTRATION	(2) MASS	b. NO. OF ANALYSES
GC/MS FRACTION – BASE/NEUTRAL COMPOUNDS (continued)															
22B. 1,4-Dichlorobenzene (106-46-7)			X	< 0.010	< 41.6						mg/l	mg/d			
23B. 3,3'-Dichlorobenzidine (91-94-1)			X	< 0.010	< 41.6						mg/l	mg/d			
24B. Diethyl Phthalate (84-66-2)			X	< 0.010	< 41.6						mg/l	mg/d			
25B. Dimethyl Phthalate (131-11-3)			X	< 0.010	< 41.6						mg/l	mg/d			
26B. Di-N-Butyl Phthalate (84-74-2)			X	< 0.010	< 41.6						mg/l	mg/d			
27B. 2,4-Dinitrotoluene (121-14-2)			X	< 0.010	< 41.6						mg/l	mg/d			
28B. 2,6-Dinitrotoluene (606-20-2)			X	< 0.010	< 41.6						mg/l	mg/d			
29B. Di-N-Octyl Phthalate (117-84-0)			X	< 0.010	< 41.6						mg/l	mg/d			
30B. 1,2-Diphenylhydrazine (as Azobenzene) (122-66-7)			X	< 0.010	< 41.6						mg/l	mg/d			
31B. Fluoranthene (206-44-0)			X	< 0.010	< 41.6						mg/l	mg/d			
32B. Fluorene (86-73-7)			X	< 0.010	< 41.6						mg/l	mg/d			
33B. Hexachlorobenzene (118-74-1)			X	< 0.010	< 41.6						mg/l	mg/d			
34B. Hexachlorobutadiene (87-68-3)			X	< 0.010	< 41.6						mg/l	mg/d			
35B. Hexachlorocyclopentadiene (77-47-4)			X	< 0.010	< 41.6						mg/l	mg/d			
36B. Hexachloroethane (67-72-1)			X	< 0.010	< 41.6						mg/l	mg/d			
37B. Indeno (1,2,3-cd) Pyrene (193-39-5)			X	< 0.010	< 41.6						mg/l	mg/d			
38B. Isophorone (78-59-1)			X	< 0.010	< 41.6						mg/l	mg/d			
39B. Naphthalene (91-20-3)			X	< 0.010	< 41.6						mg/l	mg/d			
40B. Nitrobenzene (98-95-3)			X	< 0.010	< 41.6						mg/l	mg/d			
41B. N-Nitrosodimethylamine (62-75-9)			X	< 0.010	< 41.6						mg/l	mg/d			
42B. N-Nitrosodi-N-Propylamine (621-64-7)			X	< 0.010	< 41.6						mg/l	mg/d			

CONTINUE ON REVERSE

CONTINUED FROM THE FRONT

1. POLLUTANT AND CAS NUMBER (if available)	2. MARK 'X'			3. EFFLUENT							4. UNITS		5. INTAKE (optional)		
	a. TESTING REQUIRED	b. BELIEVED PRESENT	c. BELIEVED ABSENT	a. MAXIMUM DAILY VALUE		b. MAXIMUM 30 DAY VALUE (if available)		c. LONG TERM AVRG. VALUE (if available)		d. NO. OF ANALYSES	a. CONCENTRATION	b. MASS	a. LONG TERM AVERAGE VALUE		b. NO. OF ANALYSES
				(1) CONCENTRATION	(2) MASS	(1) CONCENTRATION	(2) MASS	(1) CONCENTRATION	(2) MASS				(1) CONCENTRATION	(2) MASS	
GC/MS FRACTION – BASE/NEUTRAL COMPOUNDS *(continued)*															
43B. N-Nitrosodiphenylamine (86-30-6)			X	< 0.010	< 41.6						mg/l	mg/d			
44B. Phenanthrene (85-01-8)			X	< 0.010	< 41.6						mg/l	mg/d			
45B. Pyrene (129-00-0)			X	< 0.010	< 41.6						mg/l	mg/d			
46B. 1,2,4-Trichlorobenzene (120-82-1)			X	< 0.010	< 41.6						mg/l	mg/d			
GC/MS FRACTION – PESTICIDES															
1P. Aldrin (309-00-2)			X	< 0.06	< 0.2						ug/l	mg/d			
2P. α-BHC (319-84-6)			X	< 0.02	< 83.3						ug/l	ug/d			
3P. β-BHC (319-85-7)			X	< 0.1	< 0.4						ug/l	mg/d			
4P. γ-BHC (58-89-9)			X	< 0.03	< 0.1						ug/l	mg/d			
5P. δ-BHC (319-86-8)			X	< 0.12	< 0.5						ug/l	mg/d			
6P. Chlordane (57-74-9)			X	< 0.25	< 1.0						ug/l	mg/d			
7P. 4,4'-DDT (50-29-3)			X	< 0.06	< 0.2						ug/l	mg/d			
8P. 4,4'-DDE (72-55-9)			X	< 0.08	< 0.3						ug/l	mg/d			
9P. 4,4'-DDD (72-54-8)			X	< 0.08	< 0.3						ug/l	mg/d			
10P. Dieldrin (60-57-1)			X	< 0.08	< 0.3						ug/l	mg/d			
11P. α-Endosulfan (115-29-7)			X	< 0.05	< 0.2						ug/l	mg/d			
12P. β-Endosulfan (115-29-7)			X	< 0.08	< 0.3						ug/l	mg/d			
13P. Endosulfan Sulfate (1031-07-8)			X	< 0.09	< 0.4						ug/l	mg/d			
14P. Endrin (72-20-8)			X	< 0.06	< 0.2						ug/l	mg/d			
15P. Endrin Aldehyde (7421-93-4)			X	< 0.62	< 2.6						ug/l	mg/d			
16P. Heptachlor (76-44-8)			X	< 0.03	< 0.1						ug/l	mg/d			

CONTINUE ON PAGE V-9

CONTINUED FROM PAGE V-8

EPA I.D. NUMBER (copy from Item I of Form 1)	OUTFALL NUMBER
NM0890010515	04A094

Form Approved.
OMB No. 2040-0086
Approval expires 7-31-88

1. POLLUTANT AND CAS NUMBER (if available)	2. MARK 'X'			3. EFFLUENT							4. UNITS		5. INTAKE (optional)		
	a. TESTING REQUIRED	b. BELIEVED PRESENT	c. BELIEVED ABSENT	a. MAXIMUM DAILY VALUE (1) CONCENTRATION	a. MAXIMUM DAILY VALUE (2) MASS	b. MAXIMUM 30 DAY VALUE (if available) (1) CONCENTRATION	b. MAXIMUM 30 DAY VALUE (if available) (2) MASS	c. LONG TERM AVRG. VALUE (if available) (1) CONCENTRATION	c. LONG TERM AVRG. VALUE (if available) (2) MASS	d. NO. OF ANALYSES	a. CONCENTRATION	b. MASS	a. LONG TERM AVERAGE VALUE (1) CONCENTRATION	a. LONG TERM AVERAGE VALUE (2) MASS	b. NO. OF ANALYSES
GC/MS FRACTION – PESTICIDES *(continued)*															
17P. Heptachlor Epoxide (1024-57-3)			X	< 0.04	< 0.2						ug/l	mg/d			
18P. PCB-1242 (53469-21-9)			X	< 0.68	< 2.8						ug/l	mg/d			
19P. PCB-1254 (11097-69-1)			X	< 0.68	< 2.8						ug/l	mg/d			
20P. PCB-1221 (11104-28-2)			X	N.D.											
21P. PCB-1232 (11141-16-5)			X	N.D.											
22P. PCB-1248 (12672-29-6)			X	N.D.											
23P. PCB-1260 (11096-82-5)			X	< 0.68	< 2.8						ug/l	mg/d			
24P. PCB-1016 (12674-11-2)			X	N.D.											
25P. Toxaphene (8001-35-2)			X	< 2.5	< 10.4						ug/l	mg/d			

SM-170 COMPRESSOR COOLING WATER

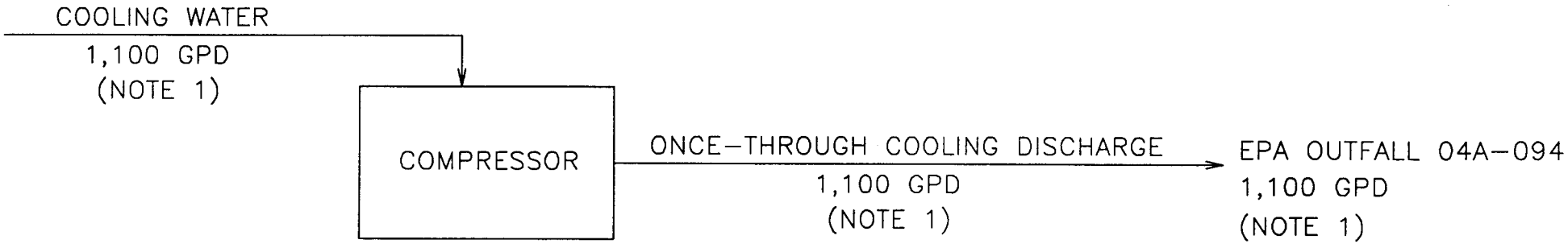

NOTE 1: MAXIMUM DAILY FLOW SHOWN.
FREQUENCY IS 1 – 2 DAYS PER MONTH.

DYE STUDY INFORMATION

BUILDING	EXPLANATION
3-170	No drains were dye verified because the sewage ejector was inaccessible. The sanitary sewer routing to the splitter box, as shown in Figure 1, was taken from LANL drawings and confirmed by the TA-3 sanitary treatment plant engineer.
3-223	No drains were dye verified because the sanitary drain from the building discharges to an enclosed sanitary lift station below grade, and could not be opened or activated. The sanitary sewer routing to the splitter box, as shown in Figure 1, was taken from LANL drawings and confirmed by the TA-3 sanitary treatment plant engineer.

BUILDING	DRAIN #	ROOM #	VERIFICATION DESTINATION
3-285	1ED4	N/A (SUMP)	EPA OUTFALL 03A-027
	1FD5	N/A (SUMP)	EPA OUTFALL 03A-027
	1FD6	N/A (SUMP)	EPA OUTFALL 03A-027
3-1544	1TL1	100A	SANITARY MANHOLE 606

NOTE 1 – PIPING LAYOUT FROM DRAWINGS:
ENG–C44377, C44897 (SHTS 7 & 33)

NOTE 2 – SEE DRAWING 1 FOR CONTINUATION.

LEGEND:

—SS— – SANITARY SEWER LINE

(1FD) – FLOOR DRAIN

(1LV) – LAVATORY

(1SD) – SINK DRAIN

(1SH) – SHOWER

(1TL) – TOILET

(1UR) – URINAL

N

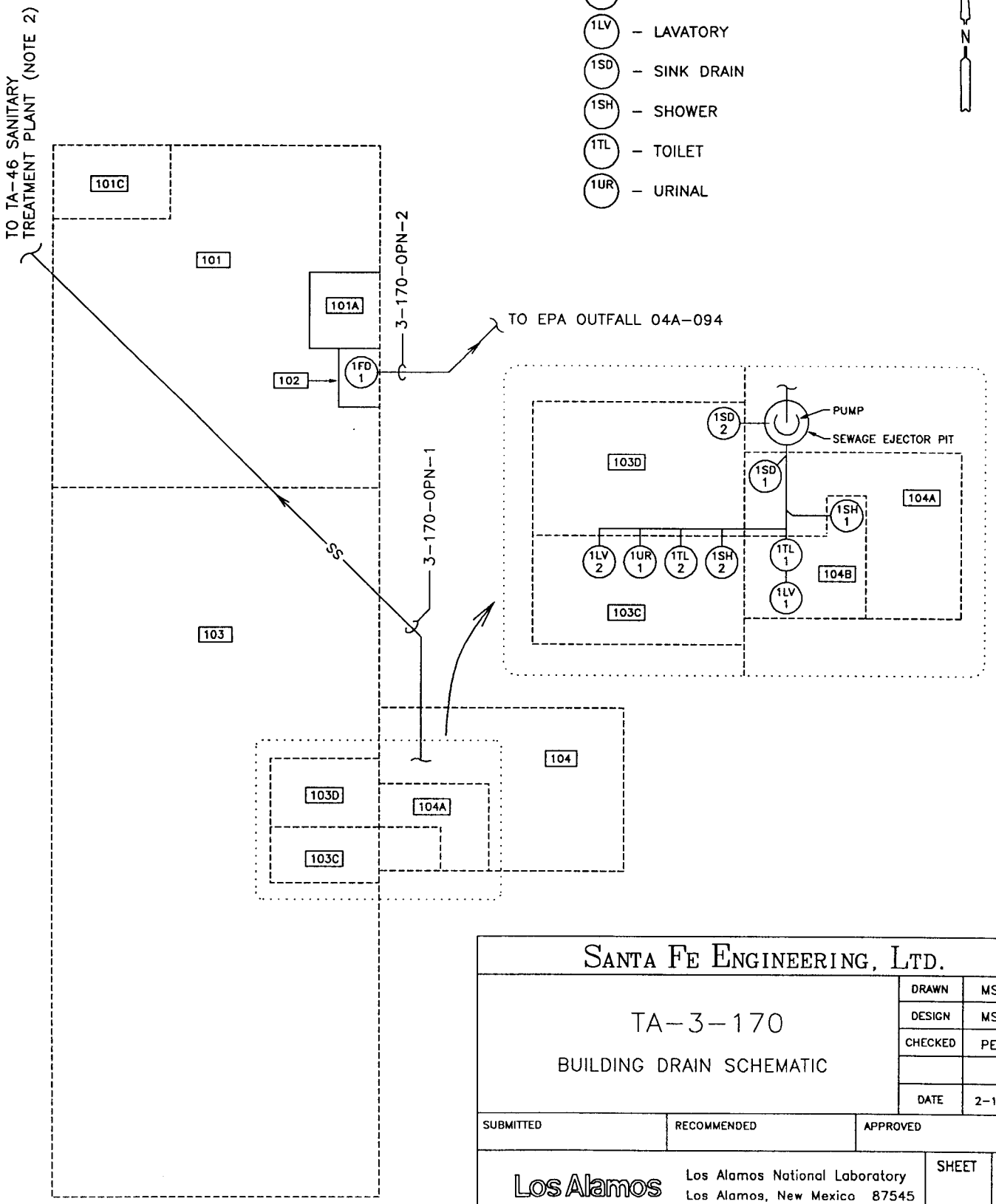

SANTA FE ENGINEERING, LTD.		
TA–3–170 BUILDING DRAIN SCHEMATIC	DRAWN	MSC
	DESIGN	MSC
	CHECKED	PEB
	DATE	2–19–93
SUBMITTED	RECOMMENDED	APPROVED
Los Alamos — Los Alamos National Laboratory, Los Alamos, New Mexico 87545	SHEET	OF
CLASSIFICATION	REVIEWER	DATE
REQUESTING DIVISION	LAB JOB NO.	DRAWING NO. / REV.
REQUESTING GROUP EM–8	11056–58	FIGURE 2

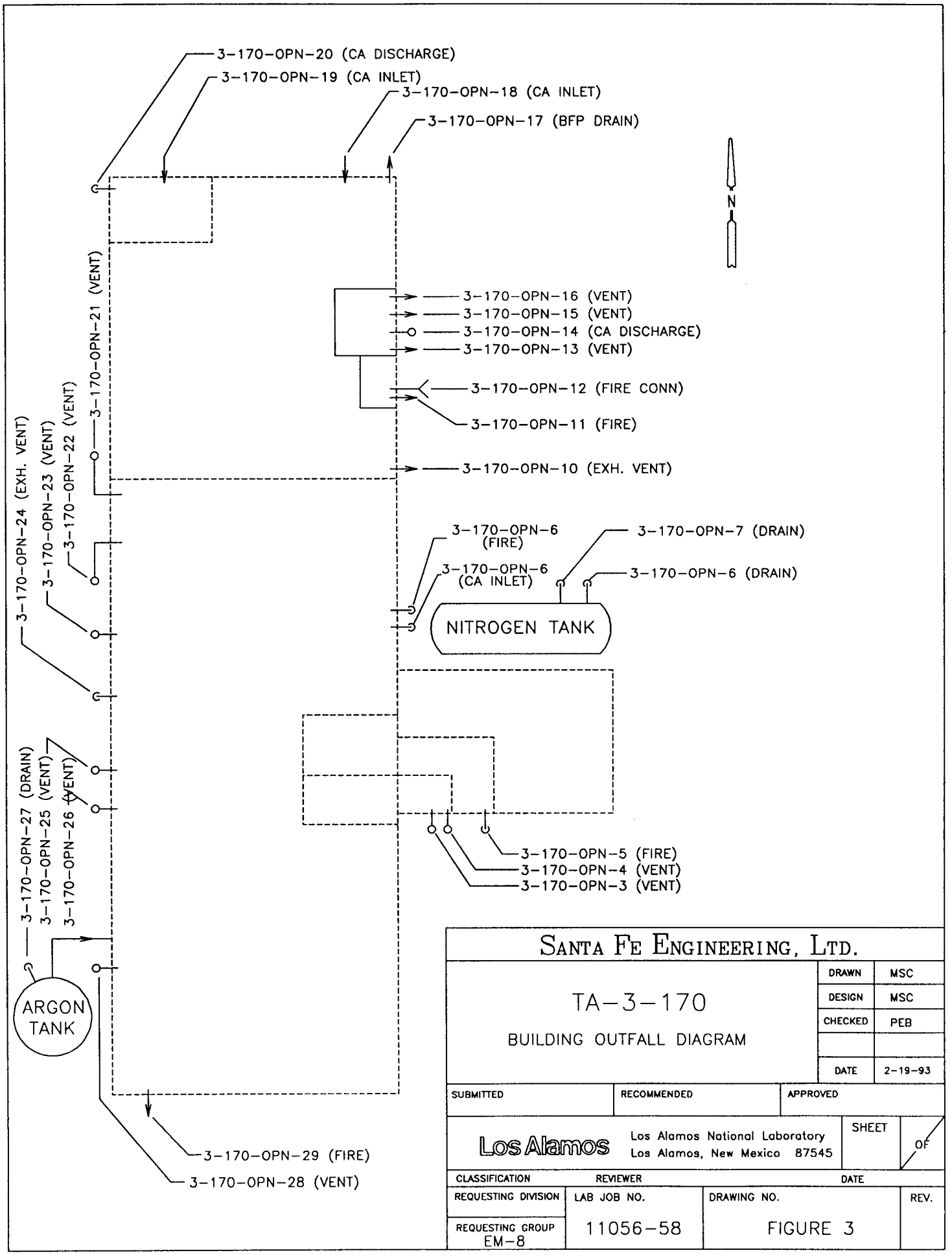
3-170-OPN-20 (CA DISCHARGE)
3-170-OPN-19 (CA INLET)
3-170-OPN-18 (CA INLET)
3-170-OPN-17 (BFP DRAIN)
N
3-170-OPN-16 (VENT)
3-170-OPN-15 (VENT)
3-170-OPN-14 (CA DISCHARGE)
3-170-OPN-13 (VENT)
3-170-OPN-12 (FIRE CONN)
3-170-OPN-11 (FIRE)
3-170-OPN-10 (EXH. VENT)
3-170-OPN-21 (VENT)
3-170-OPN-22 (VENT)
3-170-OPN-23 (VENT)
3-170-OPN-24 (EXH. VENT)
3-170-OPN-6 (FIRE)
3-170-OPN-6 (CA INLET)
3-170-OPN-7 (DRAIN)
3-170-OPN-6 (DRAIN)
NITROGEN TANK
3-170-OPN-27 (DRAIN)
3-170-OPN-25 (VENT)
3-170-OPN-26 (VENT)
3-170-OPN-5 (FIRE)
3-170-OPN-4 (VENT)
3-170-OPN-3 (VENT)
ARGON TANK
3-170-OPN-29 (FIRE)
3-170-OPN-28 (VENT)
SANTA FE ENGINEERING, LTD.
TA-3-170
BUILDING OUTFALL DIAGRAM
DRAWN MSC
DESIGN MSC
CHECKED PEB
DATE 2-19-93
SUBMITTED
RECOMMENDED
APPROVED
Los Alamos
Los Alamos National Laboratory
Los Alamos, New Mexico 87545
SHEET
OF
CLASSIFICATION
REVIEWER
DATE
REQUESTING DIVISION
LAB JOB NO.
DRAWING NO.
REV.
REQUESTING GROUP
EM-8
11056-58
FIGURE 3

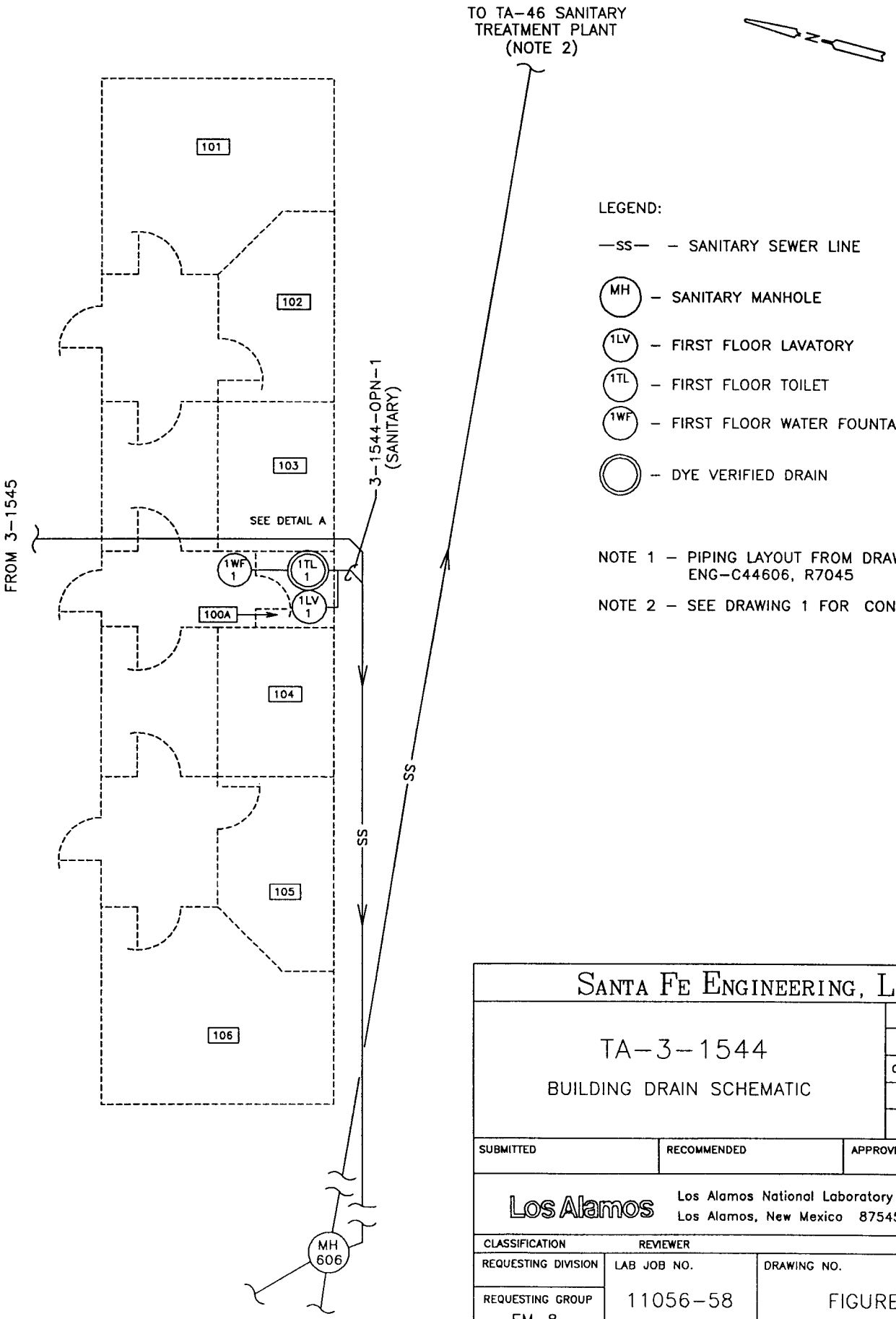
TO TA-46 SANITARY TREATMENT PLANT (NOTE 2)
N
101
102
103
104
105
106
100A
SEE DETAIL A
FROM 3-1545
3-1544-OPN-1 (SANITARY)
1WF 1
1TL 1
1LV 1
SS
SS
SS
MH 606
LEGEND:
—SS— – SANITARY SEWER LINE
MH – SANITARY MANHOLE
1LV – FIRST FLOOR LAVATORY
1TL – FIRST FLOOR TOILET
1WF – FIRST FLOOR WATER FOUNTAIN
– DYE VERIFIED DRAIN
NOTE 1 – PIPING LAYOUT FROM DRAWINGS: ENG-C44606, R7045
NOTE 2 – SEE DRAWING 1 FOR CONTINUATION.
SANTA FE ENGINEERING, LTD.
TA-3-1544
BUILDING DRAIN SCHEMATIC
DRAWN MSC
DESIGN MSC
CHECKED PEB
DATE 2-19-93
SUBMITTED
RECOMMENDED
APPROVED
Los Alamos
Los Alamos National Laboratory
Los Alamos, New Mexico 87545
SHEET
OF
CLASSIFICATION
REVIEWER
DATE
REQUESTING DIVISION
LAB JOB NO.
DRAWING NO.
REV.
REQUESTING GROUP
EM-8
11056-58
FIGURE 6

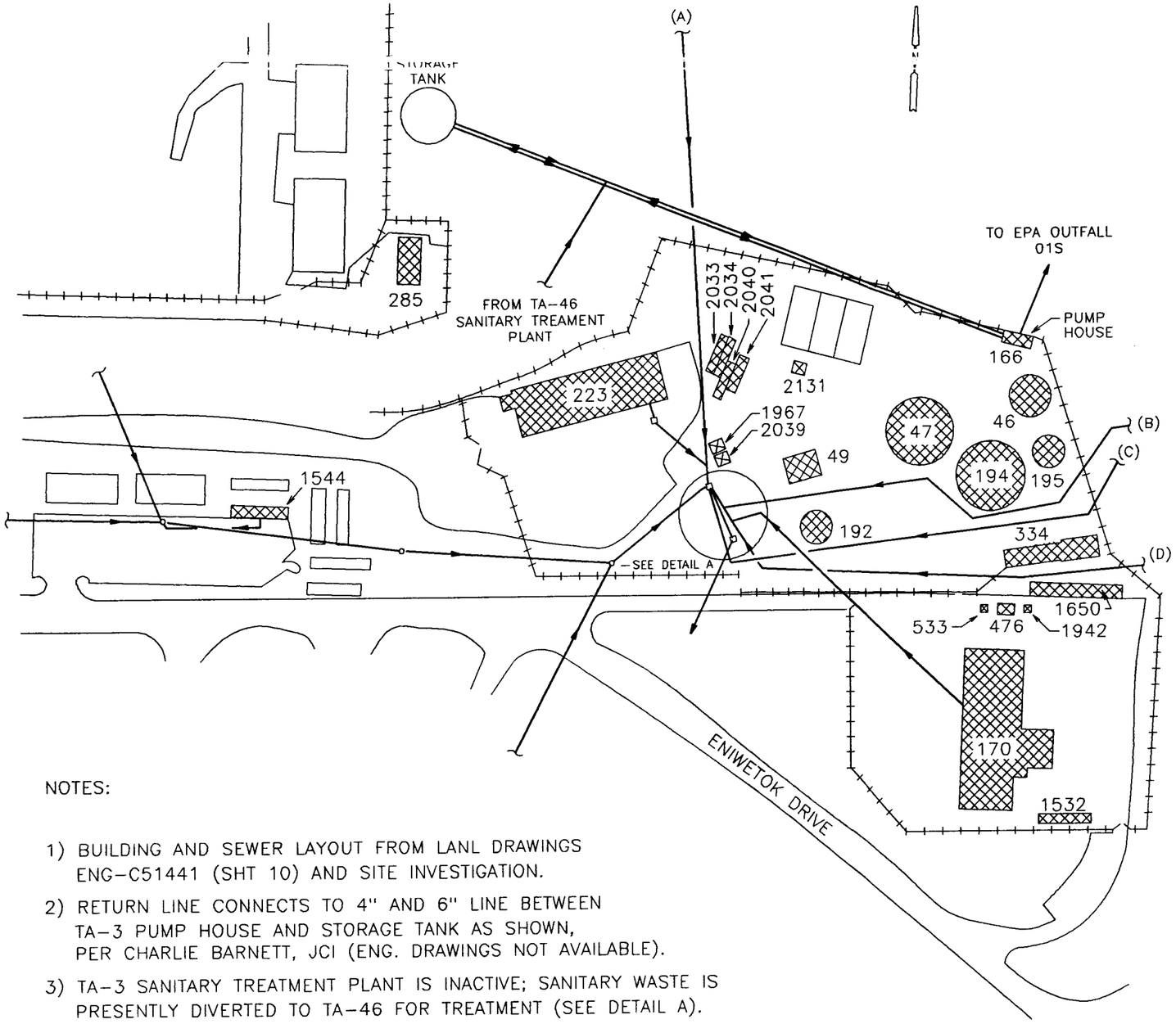

DETAIL A

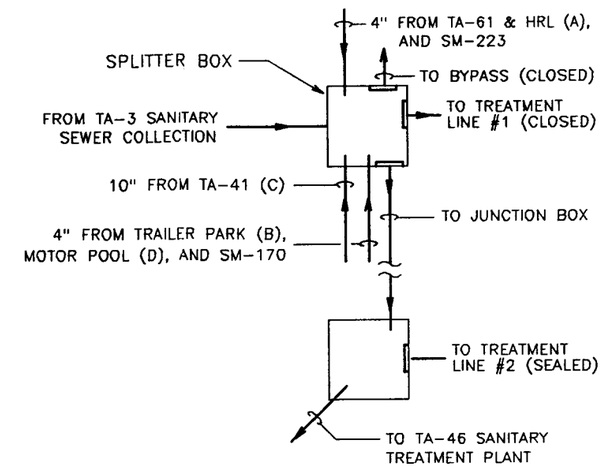

NOTES:

1) BUILDING AND SEWER LAYOUT FROM LANL DRAWINGS ENG-C51441 (SHT 10) AND SITE INVESTIGATION.
2) RETURN LINE CONNECTS TO 4" AND 6" LINE BETWEEN TA-3 PUMP HOUSE AND STORAGE TANK AS SHOWN, PER CHARLIE BARNETT, JCI (ENG. DRAWINGS NOT AVAILABLE).
3) TA-3 SANITARY TREATMENT PLANT IS INACTIVE; SANITARY WASTE IS PRESENTLY DIVERTED TO TA-46 FOR TREATMENT (SEE DETAIL A).

▨ – STRUCTURES COVERED IN THIS REPORT.

SANTA FE ENGINEERING, LTD.			
TA-3 SANITARY TREATMENT PLANT PARTIAL SITE PLAN	DRAWN	MSC	
	DESIGN	MSC	
	CHECKED	PEB	
	DATE	2/19/93	
SUBMITTED	RECOMMENDED	APPROVED	
Los Alamos — Los Alamos National Laboratory, Los Alamos, New Mexico 87545	SHEET	OF	
CLASSIFICATION	REVIEWER	DATE	
REQUESTING DIVISION	LAB JOB NO.	DRAWING NO.	REV.
REQUESTING GROUP EM-8	11056-58	FIGURE 1	

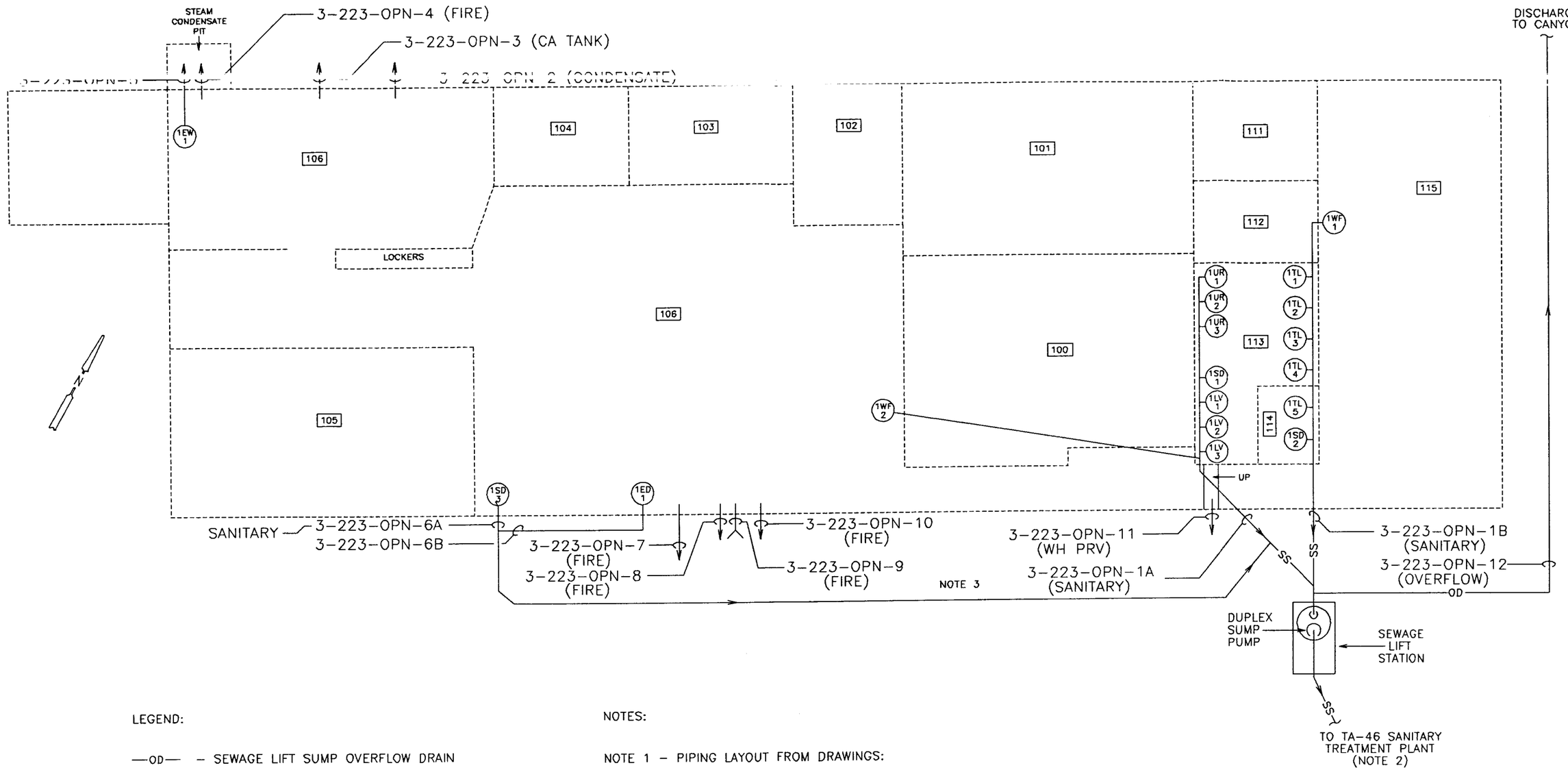

LEGEND:

—OD— – SEWAGE LIFT SUMP OVERFLOW DRAIN
—SS— – SANITAY SEWER

(1ED) – EQUIPMENT DRAIN (ICE MACHINE)
(1EW) – EYE WASH
(1LV) – LAVATORY
(1SD) – SINK DRAIN
(1TL) – TOILET
(1UR) – URINAL
(1WF) – WATER FOUNTAIN

NOTES:

NOTE 1 – PIPING LAYOUT FROM DRAWINGS:
ENG-C36982, C36991,
C51441 (SHT 10) & R5344

NOTE 2 – SEE DRAWING 1 FOR CONTINUATION.

NOTE 3 – ACTUAL ROUTING AND POINT OF CONNECTION NOT KNOWN.

SANTA FE ENGINEERING, LTD.

TA-3-223

BUILDING DRAIN SCHEMATIC

DRAWN	MSC
DESIGN	MSC
CHECKED	PEB
DATE	2-19-93

SUBMITTED | RECOMMENDED | APPROVED

Los Alamos — Los Alamos National Laboratory, Los Alamos, New Mexico 87545

SHEET / OF

CLASSIFICATION | REVIEWER | DATE

REQUESTING DIVISION	LAB JOB NO.	DRAWING NO.	REV.
REQUESTING GROUP EM-8	11056-58	FIGURE 4	

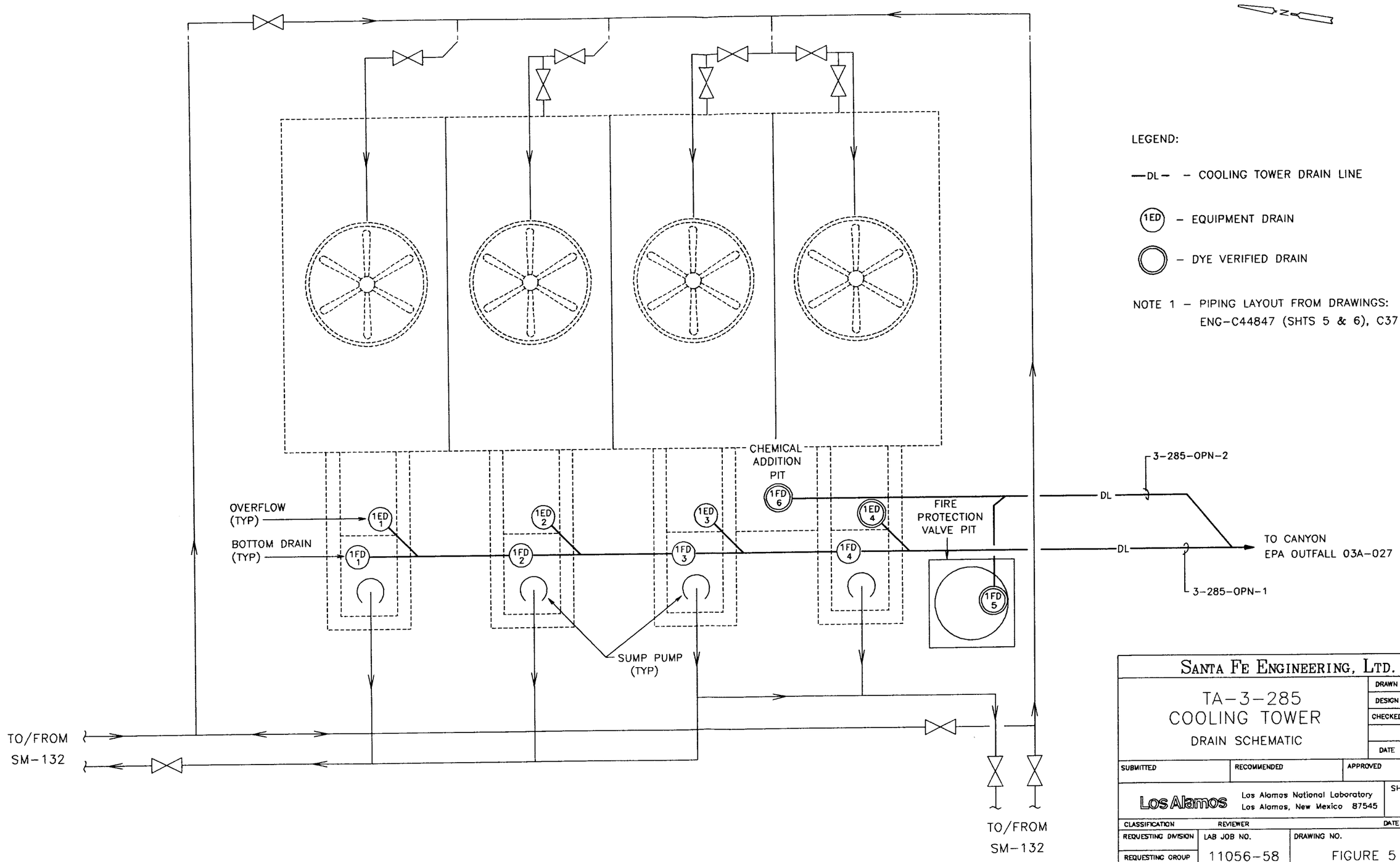
N
LEGEND:
—DL— – COOLING TOWER DRAIN LINE
1ED – EQUIPMENT DRAIN
– DYE VERIFIED DRAIN
NOTE 1 – PIPING LAYOUT FROM DRAWINGS:
ENG-C44847 (SHTS 5 & 6), C37118
CHEMICAL ADDITION PIT
1FD 6
FIRE PROTECTION VALVE PIT
1FD 5
3-285-OPN-2
DL
DL
TO CANYON EPA OUTFALL 03A-027
3-285-OPN-1
OVERFLOW (TYP)
BOTTOM DRAIN (TYP)
1ED 1
1ED 2
1ED 3
1ED 4
1FD 1
1FD 2
1FD 3
1FD 4
SUMP PUMP (TYP)
TO/FROM SM-132
TO/FROM SM-132
SANTA FE ENGINEERING, LTD.
TA-3-285
COOLING TOWER
DRAIN SCHEMATIC
DRAWN MSC
DESIGN MSC
CHECKED PEB
DATE 2/19/93
SUBMITTED
RECOMMENDED
APPROVED
Los Alamos
Los Alamos National Laboratory
Los Alamos, New Mexico 87545
SHEET
OF
CLASSIFICATION
REVIEWER
DATE
REQUESTING DIVISION
LAB JOB NO.
DRAWING NO.
REV.
REQUESTING GROUP EM-8
11056-58
FIGURE 5