United States
Environmental Protection
Agency

Office of Research and
Development
Washington DC 20460

EPA/600/4-89/034
March 1991

ENTERED

EPA

Handbook of Suggested Practices for the Design and Installation of Ground-Water Monitoring Wells

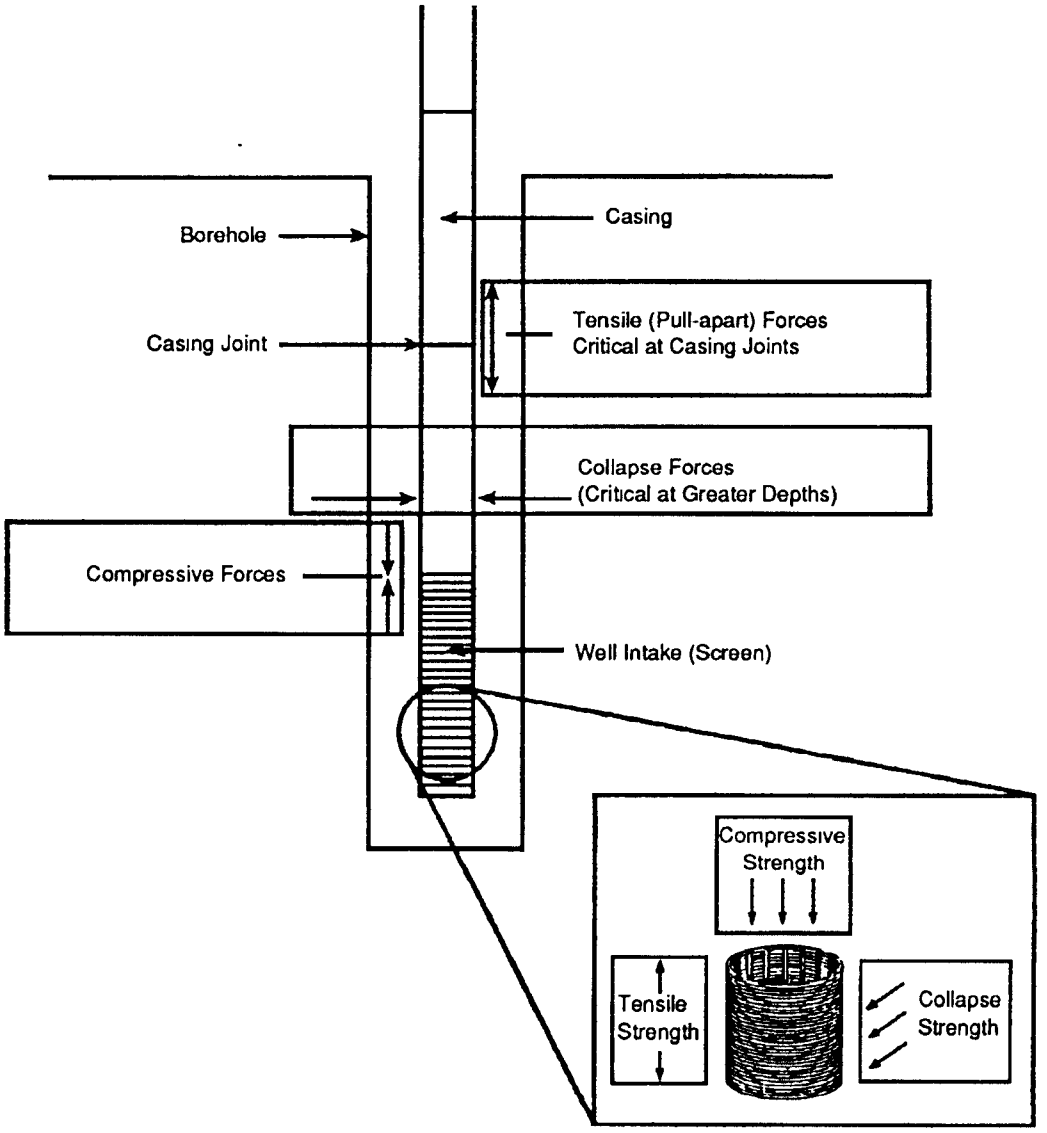

35811

EPA/600/4-89/034
March 1991

Handbook of Suggested Practices for the Design and Installation of Ground-Water Monitoring Wells

by:

Linda Aller, Truman W. Bennett and Glen Hackett
Bennett & Williams, Inc.
Columbus, Ohio 43231

Rebecca J. Petty
Ohio Department of Natural Resources
Division of Groundwater
Columbus, Ohio 43215

Jay H. Lehr and Helen Sedoris
National Water Well Association
Dublin, Ohio 43017

David M. Nielsen
Blasland, Bouck and Lee
Westerville, Ohio 43081

Jane E. Denne **(also the Project Officer)**
Advanced Monitoring Systems Division
Environmental Monitoring Systems Laboratory
Las Vegas, Nevada 89193-3478

Environmental Monitoring Systems Laboratory
Office of Research and Development
U.S. Environmental Protection Agency
Las Vegas, Nevada 89193-3478

Printed on Recycled Paper

U.S. Environmental Protection Agency
Region 5, Library (PL-12J)
77 West Jackson Boulevard, 12th Floor
Chicago, IL 60604-3590

Notice

The information in this document has been funded wholly or in part by the United States Environmental Protection Agency under Cooperative Agreement Number CR-812350-01 to the National Water Well Association. It has been subjected to the Agency's peer and administrative review, and it has been approved for publication as an EPA document. Mention of trade names or commercial products does not constitute endorsement or recommendation for use.

This document has been prepared in cooperation with EMSL-LV, Office of Research and Development. It is intended to be used as a general reference and will not supersede program-specific guidance (e.g., the RCRA Ground-Water Monitoring Technical Enforcement Guidance Document).

Abstract

The *Handbook of Suggested Practices for the Design and Installation of Ground-Water Monitoring Wells* is intended to assist personnel involved with the design, construction, and installation of ground-water monitoring wells. This document does not focus on specific regulatory requirements, but instead presents state-of-the-art technology that may be applied in diverse hydrogeologic situations. The "Handbook" addresses field-oriented practices to solve monitoring well construction problems rather than conceptual or idealized practices. The information in this "Handbook" is presented in both matrix and text form. The matrices use a relative numerical rating scheme to guide the user toward appropriate drilling technologies for particular monitoring situations. The text provides the narrative overview of the criteria that influence ground-water monitoring well design and construction in various hydrogeologic settings.

The "Handbook" addresses topics ranging from initial planning for a monitoring well to abandonment. Factors influencing monitoring well design and installation include: purpose, location, site hydrogeology, contaminant characteristics, anthropogenic activities, and testing equipment that the well must accommodate. Decontamination procedures should be planned and executed with care. Detailed recordkeeping from the time of well installation through sampling to abandonment is very important. Numerous drilling and formation sampling techniques are available, and many factors must be considered in selecting an appropriate method. Materials for well casing, screen, filter pack, and annular sealants also should be selected and installed carefully. Well completion and development procedures should allow collection of representative ground-water samples and levels. Maintenance of monitoring wells is an important network management consideration. Well abandonment procedures should include consideration of the monitoring well construction, hydrogeology, and contamination at the site. The "Handbook" serves as a general reference for the numerous factors involved in monitoring well design, construction, and installation.

This report was submitted in fulfillment of Cooperative Agreement Number CR-812350-01 by the National Water Well Association under sponsorship of the Environmental Monitoring Systems Laboratory, Las Vegas, Nevada. This report covers a period from June 1985 to May 1989, and work was completed as of June 1989.

Contents

Notice ii
Abstract iii
Figures viii
Tables x
Acknowledgments xi

Section
1. Introduction 1
Objectives and scope 1
Purpose and importance of proper ground-water monitoring well installation 1
Organization of the document 7
References 7
2. Factors influencing ground-water monitoring well design and installation 9
Geologic and hydrogeologic conditions 9
Hydrogeologic regions of the United States 9
Site-specific geologic and hydrogeologic conditions 18
Facility characteristics 18
Type of facility 19
Waste characteristics 20
Other anthropogenic influences 23
Equipment that the well must accommodate 23
Borehole geophysical tools and downhole cameras 24
Water-level measuring devices 26
Ground-water sampling devices 26
Aquifer testing procedures 26
References 27
3. Monitoring well planning considerations 29
Recordkeeping 29
Decontamination 29
Decontamination area 30
Types of equipment 32
Frequency of equipment decontamination 32
Cleaning solutions and/or wash water 32
Containment of residual contaminants and cleaning solutions and/or wash water 33
Effectiveness of decontamination procedures 34
Personnel decontamination 34
References 34
4. Description and selection of drilling methods 35
Introduction 35
Drilling methods for monitoring well installation 35
Hand augers 35
Driven wells 35
Jet percussion 36
Solid-flight augers 37
Hollow-stem augers 38
Direct mud rotary 40
Air rotary drilling 42
Air rotary with casing driver 44
Dual-wall reverse-circulation 44
Cable tool drilling 47

Other drilling methods 49
Drilling fluids 49
Influence of drilling fluids on monitoring well construction 49
Drilling fluid characteristics 50
Mud-based applications 51
Air-based applications 52
Soil sampling and rock coring methods 53
Split-spoon samplers 54
Thin-wall samplers 55
Specialized soil samplers 56
Core barrels 57
Selection of drilling methods for monitoring well installation 58
Matrix purpose 58
Matrix description and development 58
How to use the matrices 61
How to interpret a matrix number 61
Criteria for evaluating drilling methods 61
Versatility of the drilling equipment and technology with respect to the hydrogeologic conditions at the site 63
Reliability of formation (soil/rock/water) samples collected during drilling 64
Relative drilling costs 67
Availability of equipment 67
Relative time required for well installation and development 67
Ability of drilling technology to preserve natural conditions 68
Ability of the specified drilling technology to permit the installation of the proposed casing diameter at the design depth 68
Ease of well completion and development 69
Drilling specifications and contracts 69
References 71
5. Design components of monitoring wells 73
Introduction 73
Well casing 73
Purpose of the casing 73
General casing material characteristics 73
Types of casing materials 75
Coupling procedures for joining casing 83
Well casing diameter 85
Casing cleaning requirements 86
Casing cost 86
Monitoring well intakes 86
Naturally-developed wells 87
Artificially filter-packed wells 88
Well intake design 93
Annular seals 96
Purpose of the annular seal 96
Materials used for annular seals 97
Methods for evaluating annular seal integrity 101
Surface completion and protective measures 101
Surface seals 101
Above-ground completions 101
Flush-to-ground surface completions 102
References 102
6. Completion of monitoring wells 105
Introduction 105
Well completion techniques 105
Well intake installation 105
Filter pack installation 106
Annular seal installation 107
Types of well completions 109
Single riser/limited-interval wells 109
Single riser/flow-through wells 109
Nested wells 110

Multiple-level monitoring wells 111
General suggestions for well completions 112
References 112
7. Monitoring well development 115
Introduction/philosophy 115
Factors affecting monitoring well development 115
Type of geologic material 115
Design and completion of the well 116
Type of drilling technology 116
Well development 117
Methods of well development 117
Bailing 120
Surge block 121
Pumping/overpumping/backwashing 121
References 123
8. Monitoring well network management considerations 125
Well documentation 125
Well maintenance and rehabilitation 125
Documenting monitoring well performance 125
Factors contributing to well maintenance needs 127
Downhole maintenance 128
Exterior well maintenance 128
Comparative costs of maintenance 130
Well abandonment 130
Introduction 130
Well abandonment considerations 130
Well abandonment procedures 131
Grouting procedures for plugging 132
Clean-up, documentation and notification 133
References 133
Master References 134
Appendices
A. Drilling and constructing monitoring wells with hollow-stem augers 141
B. Matrices for selecting appropriate drilling equipment 165
C. Abandonment of test holes, partially completed wells, and completed wells (American Water Works Association, 1984) 207
Glossary 209

Figures

Number		Page
1	Ground-water regions of the United States	10
2a	Location of the Western Mountain Ranges region	10
2b	Topographic and geologic features in the southern Rocky Mountains part of the Western Mountain Ranges region	10
3a	Location of the Alluvial Basins region	11
3b	Common ground-water flow systems in the Alluvial Basins region	11
4a	Location of the Columbia Lava Plateau region	11
4b	Topographic and geologic features of the Columbia Lava Plateau region	11
5a	Location of the Colorado Plateau and Wyoming Basin region	12
5b	Topographic and geologic features of the Colorado Plateau and Wyoming Basin region	12
6a	Location of the High Plains region	12
6b	Topographic and geologic features of the High Plains region	12
7a	Location of the Nonglaciated Central region	13
7b	Topographic and geologic features of the Nonglaciated Central region	13
7c	Topographic and geologic features along the western boundary of the Nonglaciated Central region	13
8a	Location of the Glaciated Central region	14
8b	Topographic and geologic features of the Glaciated Central region	14
9a	Location of the Piedmont and Blue Ridge region	14
9b	Topographic and geologic features of the Piedmont and Blue Ridge region	14
10a	Location of the Northeast and Superior Uplands region	15
10b	Topographic and geologic features of the Northeast and Superior Uplands region	15
11a	Location of the Atlantic and Gulf Coastal Plain region	15
11b	Topographic and geologic features of the Gulf Coastal Plain	15
12a	Location of the Southeast Coastal Plain region	16
12b	Topographic and geologic features of the Southeast Coastal Plain	16
13a	Location of the Alluvial Valleys ground-water region	17
13b	Topographic and geologic features of a section of the alluvial valley of the Mississippi River	17
14	Topographic and geologic features of an Hawaiian island	17
15	Topographic and geologic features of parts of Alaska	17
16	Migration of a high density, miscible contaminant in the subsurface	21
17	Migration of a low density, soluble contaminant in the subsurface	21
18	Migration of a low density, immiscible contaminant in the subsurface	22
19	Migration of a dense, non-aqueous phase liquid (DNAPL) in the subsurface	22
20	Sample boring log format	31
21	Format for an "as-built" monitoring well diagram	32
22	Typical layout showing decontamination areas at a hazardous materials site	33
23	Diagram of a hand auger	35
24	Diagram of a wellpoint	36
25	Diagram of jet-percussion drilling	37
26	Diagram of a solid-flight auger	37
27	Typical components of a hollow-stem auger	39
28	Diagram of a screened auger	40
29	Diagram of a direct rotary circulation system	42
30	Diagram of a roller cone bit	43
31	Diagram of a down-the-hole hammer	44
32	Range of applicability for various rotary drilling methods	45
33	Diagram of a drill-through casing driver	46
34	Diagram of dual-wall reverse-circulation rotary method	46

35 Diagram of a cable tool drilling system 48
36 Diagrams of two types of bailers 51
37 Practical drilling fluid densities 52
38 Viscosity-building characteristics of drilling clays 52
39 Schematic of the behavior of clay particles when mixed into water 53
40 Diagram of a split-spoon sampler 55
41 Diagram of a thin-wall sampler 56
42 Two types of special soil samplers 57
43 Internal sleeve wireline piston sampler 58
44 Modified wireline piston sampler 60
45 Clam-shell fitted auger head 60
46 Types of sample retainers 60
47 Diagram of a continuous sampling tube system 61
48 Diagram of two types of core barrels 62
49 Format for a matrix on drilling method selection 63
50 Forces exerted on a monitoring well casing and screen during installation 74
51 Static compression results of Teflon® screen 77
52 Types of joints typically used between casing lengths 84
53 Effect of casing wall thickness on casing inside and outside diameter 87
54 Envelope of coarse-grained material created around a naturally developed well 88
55 Plot of grain size versus cumulative percentage of sample retained on sieve 89
56 Determining effective size of formation materials 90
57 Determining uniformity coefficient of formation materials 91
58 Envelope of coarse-grained material emplaced around an artificially filter-packed well 91
59 Artificial filter pack design criteria 92
60 Selecting well intake slot size based on filter pack grain size 93
61 Types of well intakes 97
62 Cross-sections of continuous-wrap wire-wound screen 97
63 Potential pathways for fluid movement in the casing-borehole annulus 98
64 Segregation of artificial filter pack materials caused by gravity emplacement 106
65 Tremie-pipe emplacement of artificial filter pack materials 106
66 Reverse-circulation emplacement of artificial filter pack materials 107
67 Emplacement of artificial filter pack material by backwashing 107
68 Tremie-pipe emplacement of annular seal material (either bentonite or neat cement slurry) 108
69 Diagram of a single-riser/flow-through well 109
70 Typical nested well designs 110
71 Field-fabricated PVC multilevel sampler 111
72 Multilevel capsule sampling device installation 112
73 Multiple zone inflatable packer sampling installation 112
74 Diagrams of typical bailers used in monitoring well development 122
75 Diagram of a typical surge block 123
76 Diagram of a specialized monitoring well surge block 124

Tables

Number		Page
1	Summary of federal programs and activities related to the protection of ground-water quality	2
2	Federal ground-water monitoring provisions and objectives	3
3	Use and limitations of borehole geophysical tools	24
4	Descriptive information to be recorded for each monitoring well	30
5	List of selected cleaning solutions used for equipment decontamination	34
6	Applications and limitations of hand augers	38
7	Applications and limitations of driven wells	38
8	Applications and limitations of jet-percussion drilling	38
9	Applications and limitations of solid-flight augers	39
10	Applications and limitations of hollow-stem augers	41
11	Applications and limitations of direct mud rotary drilling	41
12	Applications and limitations of air rotary drilling	44
13	Applications and limitations of air rotary with casing driver drilling	47
14	Applications and limitations of dual-wall reverse-circulation rotary drilling	47
15	Applications and limitations of cable tool drilling	49
16	Principal properties of water-based drilling fluids	50
17	Approximate Marsh Funnel viscosities required for drilling in typical types of unconsolidated materials	51
18	Drilling fluid options when drilling with air	52
19	Characteristics of common formation-sampling methods	54
20	Standard penetration test correlation chart	55
21	Index to matrices 1 through 40	59
22	Suggested areas to be addressed in monitoring well bidding specifications	69
23	Suggested items for unit cost in contractor pricing schedule	70
24	Trade names, manufacturers, and countries of origin for various fluoropolymer materials	76
25	Typical physical properties of various fluoropolymer materials	76
26	Hydraulic collapse and burst pressure and unit weight of stainless steel well casing	78
27	Typical physical properties of thermoplastic well casing materials at 73. 4°F	81
28	Hydraulic collapse pressure and unit weight of PVC well casing	81
29	Hydraulic collapse pressure and unit weight of ABS well casing	81
30	Representative classes of additives in rigid PVC materials used for pipe or well casing	83
31	Chemical parameters covered by NSF Standard 14	83
32	Volume of water in casing or borehole	86
33	Correlation chart of screen openings and sieve sizes	95
34	Typical slotted casing slot widths	96
35	Intake areas (square inches per lineal foot of screen) for continuous wire-wound well intake	96
36	Summary of development methods for monitoring wells	118
37	Comprehensive monitoring well documentation	126
38	Additional monitoring well documentation	126
39	As-built construction diagram information	126
40	Field boring log information	127
41	Regional well maintenance problems	129
42	Chemicals used for well maintenance	129
43	Well abandonment data	133

Acknowledgments

This document presents a discussion of the design and installation of groundwater monitoring wells without specific regulatory recommendations. The information contained within the document is the product of many experiences, both published and unpublished to date. Assisting in the direction of the project and in the review of various stages of the document was an able and knowledgeable advisory committee. Although each of the individuals contributed positively, this document is a product of the authors and may not be entirely endorsed by each of the committee members. To the following named persons, grateful acknowledgment of their contribution is made:

Roger Anzzolin, U.S. EPA, Office of Drinking Water
George Dixon, formerly with U.S. EPA, Office of Solid Waste
Tyler Gass, Blasland & Bouck Engineers, P.C.
James Gibb, Geraghty & Miller, Inc.
Todd Giddings, Todd Giddings & Associates
Kenneth Jennings, U.S. EPA, Office of Waste Programs Enforcement
Thomas Johnson, Levine-Fricke, Inc.
Ken McGill, formerly with U.S. EPA, Region 3
John Mann, formerly with U.S. EPA, Region 4
Roy Murphy, U.S. Pollution Control, Inc.
Marion R. Scalf, U.S. EPA, Robert S. Kerr Environmental Research Laboratory
Dick Young, U.S. EPA, Region 7
John Zannos, U.S. EPA, Region 1

The basic conceptual foundation for this report was supported in its infant stages by Leslie G. McMillion, U.S. EPA, retired. A special note of acknowledgment and gratitude is extended to him for his inspiration and support in starting this document.

In addition to the committee members, many individuals assisted in adding practical and regional perspectives to the document by participating in regional group interviews on many aspects of monitoring well design and installation. Thanks are also extended to the following individuals for the donation of their time and invaluable input:

John Baker, Anderson Geotechnical Consultants, Inc., California
Dala Bowlin, Jim Winneck, Inc., Oklahoma
John Braden, Braden Pump and Well Service, Mississippi
Harry Brown, Brown Drilling Company, Inc., Michigan
Kathryn Davies, U.S. EPA, Region 3
Hank Davis, Mobile Drilling, California
Tim De La Grange, De La Grange and Sons, California
Lauren Evans, Arizona Department of Health Services, Arizona
Jerry Frick, Walkerville Well Drilling and Supply Co., Michigan
Tyler Gass, Blasland & Bouck Engineers, P.C., New York
Jim Hendry, National Water Well Association, Ohio
Tom Holdrege, Anderson Geotechnical Consultants, Inc., California
Joseph Keely, Oregon Graduate Center, Oregon
Larry Krall, Layne Environmental Services, Arizona
Bruce Kroecker, Layne Environmental Services, Kansas
David Lang, U.S. EPA, Region 1

Bill Long, Jim Winneck, Inc., Oklahoma
Carl Mason, C.M. Consulting, Pennsylvania
Bill McKinnel, West Corp., Wyoming
Bruce Niermeyer, Interstate Soil Sampling, Inc., California
Harry Ridgell, Jr., Coast Water Well Service, Inc., Mississippi
Charles O. Riggs, Central Mine Equipment Co., Missouri
Scott Sharp, Layne Environmental Services, Arizona
Bill Snyder, William Stothoff Company, Inc., New Jersey
Steve Story, Layne Environmental Services, California
Fred Strauss, Layne Environmental Services, California
Dave Sullivan, D.P. Sullivan & Daughters Drilling Firm, Inc., Massachusetts
Bud Thorton, Associated Well Drillers, Inc., Idaho
Taylor Virdell, Virdell Drilling, Texas
Dick Willey, U.S. EPA, Region 1
Douglas Yeskis, U.S. EPA, Region 5
John Zannos, U.S. EPA, Region 1

In addition, gratitude is expressed to those individuals who participated in reviewing the document:

Joe Abe, U.S. EPA, Office of Solid Waste
Doug Bedinger, Environmental Research Center, UNLV
Regina Bochicchio, Desert Research Institute, UNLV
Jane Denne, U.S. EPA, EMSL - Las Vegas
Joe DLugosz, U.S. EPA, EMSL - Las Vegas
Phil Durgin, U.S. EPA, EMSL - Las Vegas
Larry Eccles, U.S. EPA, EMSL - Las Vegas
Steven Gardner, U.S. EPA, EMSL - Las Vegas
Jack Keeley, U.S. EPA, retired
Eric Koglin, U.S. EPA, EMSL - Las Vegas
Lowell Leach, U.S. EPA, Robert S. Kerr Environmental Research Laboratory, Ada
Wayne Pettyjohn, Oklahoma State University
Mario Salazar, U.S. EPA, Office of Drinking Water
Kenneth Scarbrough, U.S. EPA, EMSL - Las Vegas
Peter Siebach, U.S. EPA, Office of Solid Waste
Kendrick Taylor, Desert Research Institute, University of Nevada System, Reno
John Worlund, U.S. EPA, EMSL - Las Vegas

Kendrick Taylor also provided information contained in the borehole geophysical tool section of the document.

Section 1
Introduction

Objectives and Scope

The *Handbook of Suggested Practices for the Design and Installation of Ground-Water Monitoring Wells* has been prepared as an aid to owners and operators of facilities as well as others concerned with proper installation of ground-water monitoring wells. This document is also designed to assist state and federal authorities in evaluating all aspects of monitoring well design and installation in varying hydrogeologic settings. Information contained within this publication does not address specific regulatory requirements, which must be followed, but rather presents state-of-the-art technology that can be used in differing situations.

This document is intended to be both informative and descriptive in nature. The objectives are to provide a concise description of the components of monitoring well design and installation and to detail the applicability of various drilling techniques in diverse hydrogeologic regimes. The information is presented in both text and matrix form. Through a relative numerical rating scheme, the matrix guides the user toward appropriate drilling technology for particular monitoring situations.

Impetus for the development of the *Handbook of Suggested Practices for the Design and Installation of Ground-Water Monitoring Wells* was provided by the passage of a series of federal laws which addressed the need to protect ground-water quality. Table 1 lists the laws enacted by Congress and summarizes the applicable ground-water activities associated with each law. Of the sixteen statutes listed in Table 1, ten statutes have regulatory programs which establish ground-water monitoring requirements for specific sources of contamination. Table 2 summarizes the objectives and monitoring provisions of the federal acts. While the principal objectives of the laws are to obtain background water-quality data and to evaluate whether or not ground water is being contaminated, the monitoring provisions contained within the laws vary significantly. Acts may mandate that ground-water monitoring *regulations* be adopted, or they may address the need for the establishment of *guidelines* to protect ground water. Further, some statutes specify the adoption of rules that must be implemented uniformly throughout the United States, while others authorize adoption of minimum standards that may be made more stringent by state or local regulations.

With such diverse statutes mandating ground-water monitoring requirements, it is not surprising that the regulations promulgated under the authority of the statutes also vary in scope and specificity. In general, most regulations further define the objectives of the statute and clarify the performance standards to achieve the stated objectives.

More specific ground-water monitoring recommendations can be found in the numerous guidance documents and directives issued by agencies responsible for implementation of the regulations. Examples of guidance documents include the Office of Waste Programs Enforcement Technical Enforcement Guidance Document (TEGD) (United States Environmental Protection Agency, 1986), the Office of Solid Waste Documents SW-846 (Wehran Engineering Corporation, 1977) and SW-611 (United States Environmental Protection Agency, 1987). The purpose of this "Handbook" is to be a general (non-program-specific) reference to provide the user with a practical decision-making guide for designing and installing monitoring wells, and it will not supersede program-specific guidance.

Purpose and Importance of Proper Ground-Water Monitoring Well Installation

The primary objective of a monitoring well is to provide an access point for measuring ground-water levels and to permit the procurement of ground-water samples that accurately represent in-situ ground-water conditions at the specific point of sampling. To achieve this objective, it is necessary to fulfill the following criteria:

1) construct the well with minimum disturbance to the formation;
2) construct the well of materials that are compatible with the anticipated geochemical and chemical environment;
3) properly complete the well in the desired zone;
4) adequately seal the well with materials that will not interfere with the collection of representative water-quality samples; and
5) sufficiently develop the well to remove any additives associated with drilling and provide unobstructed flow through the well.

In addition to appropriate construction details, the monitoring well must be designed in concert with the overall goals of the monitoring program. Key factors that must be considered include:

1) intended purpose of the well;
2) placement of the well to achieve accurate water levels and/or representative water-quality samples;
3) adequate well diameter to accommodate appropriate tools for well development, aquifer testing equipment and water-quality sampling devices; and
4) surface protection to assure no alteration of the structure or impairment of the data collected from the well.

Table 1. Summary of Federal Programs and Activities Related to the Protection of Ground-Water Quality (after Office of Technology Assessment, 1984)

	Investigations/detection				Correction		Prevention				
Statutes	**Inventories of sources[a]**	**Ambient ground-water monitoring**	**Ground-water monitoring related to sources[a]**	**Water supply monitoring**	**Federally funded remedial actions**	**Regulatory requirements for sources[a]**	**Regulate chemical production**	**Standards for new/existing sources[a]**	**Aquifer protection**	**Standards**	**Other[b]**
Atomic Energy Act			X		X	X		X		X	
Clean Water Act	X	X	X		X			X		X	X
Coastal Zone Management Act											X
Comprehensive Environmental Response, Compensation and Liability Act	X		X		X					X	
Federal Insecticide, Fungicide and Rodenticide Act			X				X	X			
Federal Land Policy and Management Act (and associated mining laws)			X					X			
Hazardous Liquid Pipeline Safety Act	X							X			
Hazardous Materials Transportation Act	X							X			
National Environmental Policy Act											X
Reclamation Act					X						
Resource Conservation and Recovery Act	X		X			X		X			
Safe Drinking Water Act	X		X	X				X	X	X	
Surface Mining Control and Reclamation Act			X		X			X			
Toxic Substances Control Act			X				X	X			
Uranium Mill Tailings Radiation Control Act			X		X	X		X			
Water Research and Development Act											X

[a] Programs and activities under this heading relate directly to specific sources of ground-water contamination.
[b] This category includes activities such as research and development and grants to the states to develop ground-water related programs.

Table 2. Federal Ground-Water Monitoring Provisions and Objectives (after Office of Technology Assessment, 1984)

Statutory authority	Monitoring provisions[a]	Monitoring objectives
Atomic Energy Act	Ground-water monitoring is specified in Federal regulations for low-level radioactive waste disposal sites. The facility license must specify the monitoring requirements for the source. The monitoring program must include: - Pre-operational monitoring program conducted over a 12-month period. Parameters not specified. - Monitoring during construction and operation to provide early warning of releases of radionuclides from the site. Parameters and sampling frequencies not specified. - Post-operational monitoring program to provide early warning of releases of radionuclides from the site. Parameters and sampling frequencies not specified. System design is based on operating history, closure, and stabilization of the site.	To obtain background water quality data and to evaluate whether ground water is being contaminated.
	Ground-water monitoring related to the development of geologic repositories will be conducted. Measurements will include the rate and location of water inflow into subsurface areas and changes in ground-water conditions.	To confirm geotechnical and design parameters and to ensure that the design of the geologic repository accommodates actual field conditions.
	Ground-water monitoring may be conducted by DOE, as necessary, as part of remedial action programs at storage and disposal facilities for radioactive substances.	
Clean Water Act		
-Sections 201 and 405	Ground-water monitoring requirements are established on a case-by-case basis for the land application of wastewater and sludge from sewage treatment plants.	To evaluate whether ground water is being contaminated.
-Section 208	No explicit requirements are established; however, ground-water monitoring studies are being conducted by SCS under the Rural Clean Water Program to evaluate the impacts of agricultural practices and to design and determine the effectiveness of Best Management Practices.	To characterize a contamination problem and to select and evaluate the effectiveness of corrective measures.
Coastal Zone Management Act	The statute does not authorize development of regulations for sources. Thus, any ground-water monitoring conducted would be the result of requirements established by a State plan (e.g., monitoring with respect to salt-water intrusion) authorized and funded by CZMA.	
Comprehensive Environmental Response, Compensation, and Liability Act	Ground-water monitoring may be conducted by EPA (or a State) as necessary to respond to releases of any hazardous substance, contaminant, or pollutant (as defined by CERCLA).	To characterize a contamination problem (e.g., to assess the impacts of the situation, to identify or verify the source(s), and to select and evaluate the effectiveness of corrective measures).
Federal Insecticide, Fungicide and Rodenticide Act-Section 3	No monitoring requirements established for pesticide users. However, monitoring may be conducted by EPA in instances where certain pesticides are contaminating ground water.[b]	To characterize a contamination problem.
Federal Land Policy and Management Act (and associated mining laws)	Ground-water monitoring is specified in Federal regulations for geothermal recovery operations on Federal lands for a period of at least one year prior to production. Parameters and monitoring frequency are not specified. Explicit ground-water monitoring requirements for mineral operations on Federal lands are not established in Federal Regulations. Monitoring may be required (as permit condition) by BLM.	To obtain background water-quality data.
Hazardous Liquid Pipeline Safety Act	Although the statute authorizes development of regulations for certain pipelines for public safety purposes, the regulatory requirements focus on design and operation and do not provide for ground-water monitoring.	
Hazardous Materials Transportation Act	Although the statute authorizes development of regulations for transportation for public safety purposes, the regulatory requirements focus on design and operation and do not provide for ground-water monitoring.	
National Environmental Policy Act	The statute does not authorize development of regulations for sources.	

(Continued)

Table 2. (Continued)

Statutory authority	Monitoring provisions[a]	Monitoring objectives
Reclamation Act	No explicit requirements established; however, monitoring may be conducted, as necessary, as part of water supply development projects.	
Resource Conservation and Recovery Act -Subtitle C	Ground-water monitoring is specified in Federal regulations for all hazardous waste land disposal facilities (e.g., landfills, surface impoundments, waste piles, and land treatment units).	
	Facilities in existence on the effective date of statutory or regulatory amendments under the act that would make the facility subject to the requirements to have a RCRA permit must meet *Interim Status* monitoring requirements until a final permit is issued. These requirements specify the installation of at least one upgradient well and three downgradient wells. Samples must be taken quarterly during the first year and analyzed for the National Drinking Water Regulations, water quality parameters (chloride, iron, manganese, phenols, sodium and sulfate), and indicator parameters (pH, specific conductance, TOC and TOX). In subsequent years, each well is sampled and analyzed annually for the six background water-quality parameters and semi-annually for the four indicator parameters.	To obtain background water-quality data and evaluate whether ground water is being contaminated.
	If contaminant leakage has been detected during detection monitoring, the owner or operator of an interim status facility must undertake assessment monitoring. The owner or operator must determine the vertical and horizontal concentration profiles of all the hazardous waste constituents in the plume(s) escaping from waste management units.	
	Ground-water monitoring requirements can be waived by an owner/operator if a written determination indicating that there is low potential for waste migration via the uppermost aquifer to water supply wells or surface water is made and certified by a qualified geologist or engineer. Ground-water monitoring requirements for a surface impoundment may be waived if (1) it is used to neutralize wastes which are hazardous solely because they exhibit the corrosivity characteristic under Section 261.22 or are listed in Subpart D of Part 261 and (2) contains no other hazardous waste. The owner or operator must demonstrate that there is no potential for migration of the hazardous wastes from the impoundment. The demonstration must be in writing and must be certified by a qualified professional.	
	The monitoring requirements for a *fully permitted* facility are comprised of a three-part program:	To obtain background water-quality data or evaluate whether ground water is being contaminated (detection monitoring), to determine whether groundwater quality standards are being met (compliance monitoring), and to evaluate the effectiveness of corrective action measures.
	-*Detection Monitoring* - Implemented when a permit is issued and there is no indication of leakage from a facility. Parameters are specified in the permit. Samples must be taken and analyzed at least semi-annually for active life of regulated unit and the post-closure care period. If there is a statistically significant increase in parameters specified in permit, owner or operator must notify Regional Administrator and sample ground water in all monitoring wells for Appendix IX constituents.	
	-*Compliance Monitoring* - Implemented when ground-water contamination is detected. Monitoring is conducted to determine whether	

(Continued)

Table 2. (Continued)

Statutory authority	Monitoring provisions[a]	Monitoring objectives
Resource Conservation and Recovery Act (cont.) -Subtitle C (cont.)	or not regulated units are in compliance with the ground-water protection standard specified in facility permit. Samples must be taken and analyzed at least quarterly for parameters specified in the permit. Samples must also be analyzed for a specific list of constituents (Appendix IX to Part 264). -*Corrective Action Monitoring* - Implemented if compliance monitoring indicates that specified concentration levels for specified parameters are being exceeded and corrective measures are required. Monitoring must continue until specified concentration levels are met. Parameters and monitoring frequency not specified. -Exemptions are provided from these regulations for owner or operator exempted under Section 264.1, or if Regional Administrator finds unit is engineered structure; does not receive or contain liquid waste or waste containing free liquids; is designed and operated to exclude liquids precipitation, and other run-on and run-off; has both inner and outer containment layers; has a leak detection system built into each containment layer; owner or operator will provide continuing operation and maintenance of leak detection systems; and to a reasonable degree of certainty will not allow hazardous constituents to migrate beyond the outer containment layer prior to end of post-closure care period.	
-Subtitle D	The 1984 Hazardous and Solid Waste Amendments require EPA to revise criteria for solid waste management facilities that may receive household hazardous waste or small quantity generator hazardous waste. At a minimum, the revisions must require ground-water monitoring, establish location criteria and provide for corrective action. On August 30, 1988, EPA published proposed rules requiring ground-water monitoring at all new and existing municipal solid waste landfills.	
-Subtitle I	Ground-water monitoring is one of the release detection options available for owners and operators of petroleum underground storage tanks. It is also an option at existing hazardous substance underground storage tanks until December 22, 1998. At the end of this period, owners and operators must upgrade or replace this release detection method with secondary containment and interstitial monitoring unless a variance is obtained.	
Safe Drinking Water Act -Part C-Underground Injection Control Program	Ground-water monitoring requirements may be specified in a facility permit for injection wells used for in-situ or solution mining of minerals (Class III wells) where injection is into a formation containing less than 10,000 mg/l TDS. Parameters and monitoring frequency not specified except in areas subject to subsidence or collapse where monitoring is required on a quarterly basis. Ground-water monitoring may also be specified in a permit for wells which inject beneath the deepest underground source of drinking water (Class I wells). Parameters and monitoring frequency not specified in Federal regulations.	To evaluate whether ground water is being contaminated.

(Continued)

Table 2. (Continued)

Statutory authority	Monitoring provisions[a]	Monitoring objectives
Surface Mining Control and Reclamation Act	Ground-water monitoring is specified in Federal regulations for surface and underground coal mining operations to determine the impacts on the hydrologic balance of the mining and adjacent areas. A ground-water monitoring plan must be developed for each mining operation (including reclamation). At a minimum, parameters must include total dissolved solids or specific conductance, pH, total iron, and total manganese. Samples must be taken and analyzed on a quarterly basis. Monitoring of a particular water-bearing stratum may be waived by the regulatory authority if it can be demonstrated that it is not a stratum which serves as an aquifer that significantly ensures the hydrologic balance of the cumulative impact area.	To obtain background water-quality data and evaluate whether ground water is being contaminated.
Toxic Substance Control Act -Section 6	Ground-water monitoring specified in Federal regulations requires monitoring prior to commencement of disposal operations for PCBs. Only three wells are required if underlying earth materials are homogenous, impermeable and uniformly sloping in one direction. Parameters include (at a minimum) PCBs, pH, specific conductance, and chlorinated organics. Monitoring frequency not specified. No requirements are established for active life or after closure.	To obtain background water-quality data.

If proper monitoring well design and construction techniques are not employed during monitoring well installation, the data collected from the well may not be reliable. For example, Sosebee et al. (1983) determined that the solvent used to weld lengths of polyvinyl chloride (PVC) casing together can leach significant amounts of tetrahydrofuran, methylethyl ketone, methylbutyl ketone, and other synthetic organic chemicals into water that comes in contact with the solvent-welded casing joint. This could result in false determinations of the presence of certain chemical constituents in water samples taken from PVC wells in which the joints were solvent welded.

Monitoring well installation procedures can also have a significant impact on the integrity of ground-water samples. For example, Brobst and Buszka (1986) found that organic drilling fluids and bentonite drilling muds used in mud rotary drilling can have an effect on the chemical oxygen demand of ground water adjacent to the wellbore in a rotary-drilled well. This, in turn, can affect the quality of a water sample taken from such a well, resulting in the acquisition of non-representative ground-water samples.

Vertical seepage of leachate along well casing can also produce non-representative samples. Monitoring wells are frequently sealed with neat cement grout, bentonite, or a cement-bentonite mixture. The correct choice of a grout and the proper emplacement method to ensure a seal are critical to assure ground-water sample integrity and prevent cross contamination of aquifers. Wehrmann (1983) noted that while a neat cement grout is often recommended, shrinkage and cracking of the cement upon curing can create an improper seal. Kurt and Johnson (1982) have presented the case that the smooth surface of thermoplastic casing provides a potential path for vertical leakage between the casing and the grout material. The implications of the impact of adhesion, including chemical bonding, versus swell pressure have not been documented in the literature. However, it is known that vertical leakage between the casing and the grout material may occur because of swelling and shrinkage during the curing of the grout.

This brief synopsis of potential problems associated with improper monitoring well design and installation illustrates that there are a number of design elements that must be addressed in proper monitoring well construction. This manual attempts to discuss the basic elements that lead to the construction of a viable monitoring well. Where appropriate, potential problems or pitfalls are discussed.

Organization of the Document

This document contains 8 major sections and 3 supporting appendices. A complete list of references can be found immediately following Section 8. Section 1, "Introduction," provides an explanation of the impetus for this "Handbook" and includes a brief discussion of the regulatory framework for ground-water monitoring regulations. Section 2, "Factors Influencing Ground-Water Monitoring Well Design and Installation," discusses the importance of sizing a monitoring well in accordance with the intended purpose of the well. Section 2 also describes the importance of monitoring well location and the influence of hydrogeology, contaminant characteristics and anthropogenic influences on monitoring well design. Section 3, "Monitoring Well Planning Considerations," explains the importance of keeping detailed records during the entire existence of the monitoring well from installation through sampling to abandonment. A discussion of the necessity of decontamination procedures for drilling equipment used during monitoring well installation is also included in this section. Section 4, "Description and Selection of Drilling Methods," includes a brief discussion of drilling and sampling methods used during monitoring well construction and the advantages and disadvantages of each technique. The focus of this section is a set of matrices (included in Appendix B) that indicate favorable drilling techniques for monitoring wells with certain specifications drilled in selected hydrogeologic settings. Section 5, "Design Components of Monitoring Wells," describes the materials and installation techniques for casing, well intakes, and filter packs. A discussion of grout mixtures and emplacement techniques is also presented. Section 6, "Completion of Monitoring Wells," provides a description of well completion techniques and types of well completions designed to maximize collection of representative ground-water samples. Section 7, "Monitoring Well Development," discusses the importance of proper development and describes techniques used in monitoring wells. Section 8, "Monitoring Well Network Management Considerations," discusses the importance of maintenance and proper well abandonment coupled with the necessity for recordkeeping.

Also included within the document are a glossary and three supporting Appendices. The glossary contains pertinent ground-water monitoring terms. Appendix A contains a detailed discussion of installing monitoring wells with a hollow-stem auger. Appendix B includes a set of matrices designed to assist in the selection of drilling technologies. Appendix C is a reproduction of a standard for well abandonment.

References

Brobst, R.D. and P.M. Buszka, 1986. The effect of three drilling fluids on ground-water sample chemistry; Ground Water Monitoring Review, vol. 6, no. 1, pp. 62-70.

Kurt, Carl E. and R.C. Johnson, Jr., 1982. Permeability of grout seals surrounding thermoplastic well casing; Ground Water, vol. 20, no. 4, pp. 415-419.

Office of Technology Assessment, 1984. Protecting the nation's ground water from contamination, vols. I and II; United States Congress, Washington, D.C., 503 pp.

Sosebee, J.B., P.C. Geiszler, D.L. Winegardner and C.R. Fisher, 1983. Contamination of ground-water samples with PVC adhesives and PVC primer from monitor wells; Proceedings of the ASTM Second Symposium on Hazardous and Industrial Solid Waste Testing, ASTM STP 805, R.A. Conway and W.P. Gulledge, eds., American Society for Testing and Materials, Philadelphia, Pennsylvania, pp. 38-50.

United States Environmental Protection Agency, 1986. RCRA ground-water monitoring technical enforcement guidance document; Office of Waste Programs Enforcement, Office of Solid Waste and Emergency Response, OSWER-9950.1, United States Environmental Protection Agency, 317 pp.

United States Environmental Protection Agency, 1987. Test methods for evaluating solid waste, physical/chemical methods (SW-846); Office of Solid Waste and Emergency Response, Government Printing Office, Washington, D.C., 519 pp.

Wehran Engineering Corporation, 1977. Procedures manual for ground-water monitoring at solid waste disposal facilities (SW-611); National Technical Information Service, Springfield, Virginia, 269 pp.

Wehrmann, H. Allen, 1983. Monitoring well design and construction; Ground Water Age, vol. 17, no. 8, pp. 35-38.

Section 2
Factors Influencing Ground-Water Monitoring Well Design and Installation

Geologic and Hydrogeologic Conditions

The geologic and hydrogeologic conditions at a site affect the occurrence and movement of ground water and contaminant transport in the subsurface. Concomitantly, these two factors significantly influence the design and construction techniques used to install a monitoring well. The following discussion of the geologic and hydrogeologic conditions pertinent to the design and construction of monitoring wells is divided into two parts. The first part addresses regional geologic and hydrogeologic conditions that impact ground-water occurrence, and hence the types of water-bearing materials that are likely to be monitored. Non-exploitable aquifers in some cases, must also be monitored. The second part of this discussion focuses more on site-specific geologic and hydrogeologic conditions that can affect the design of a monitoring well and selection of an appropriate method for drilling and constructing the well.

Hydrogeologic Regions of the United States

Heath (1984) has developed a classification system that divides the United States into ground-water regions based on ground-water occurrence and availability. Because the presence of ground water in the subsurface is closely related to geologic conditions, areas with similar rock composition and structure tend to form similar ground-water regions. The classification system developed by Heath (1984) uses the type and interrelationship of the aquifers in an area as the major division for regional designation. Additional factors including: 1) primary versus secondary porosity, 2) mineral composition of the aquifer, 3) hydraulic characteristics of the aquifer, and 4) the effects of recharge and/or discharge areas were used to further define each region. Figure 1 illustrates the division of the United States into 15 ground-water regions. For the purposes of this discussion, however, Puerto Rico and the Virgin Islands will be excluded. Because the primary focus of this discussion is limited to the hydrogeologic conditions pertinent to monitoring well construction, the reader is referred to Heath (1984) for additional information on each ground-water region.

Western Mountain Ranges —

The Western Mountain Ranges are comprised of tall, massive mountains separated by narrow, steep-sided valleys. In many areas, the mountains have been subjected to alpine glaciation. Major lowland areas occur between the mountain ranges in the southern part of this region. With geologic origins related to major orogenic and tectonic events, most of the mountain ranges are comprised of metamorphic and igneous rocks flanked by consolidated sedimentary rocks of Paleozoic to Cenozoic age. Other mountain ranges such as the Cascades and the San Juan mountains are composed primarily of basaltic lava.

Bare bedrock exposures or a thin layer of weathered material cover the slopes and summits of the mountains. The weathered layer tends to thicken toward the base of the mountains and in the alluvial valleys. Figures 2a and 2b illustrate the location and main geologic and hydrogeologic features of this region. Despite high precipitation rates in the region, ground-water resources are primarily limited to the storage capacity of the fractures in the crystalline rocks that serve as an aquifer for this area. The lowlands between the mountain ranges contain thick deposits of fine to coarse-grained alluvium eroded from the adjacent mountains. These deposits serve as aquifers that are capable of supplying moderate to large yields to wells. The alluvial aquifers are often in direct hydraulic connection with the underlying bedrock.

Alluvial Basins —

The Alluvial Basins region is comprised of thick alluvial deposits in structural lows alternating with igneous and metamorphic mountain ranges. This region covers two distinctive areas: 1) the Basin and Range area of the southwest and 2) the Puget Sound/Willamette Valley Area of the Pacific Northwest (Figure 3a).

The Basin and Range area consists of basins filled with thick deposits of unconsolidated alluvial material eroded from the adjacent mountains and deposited as coalescing alluvial fans. The alluvial materials in the fans are typically coarsest near the mountains and become progressively finer toward the center of the basin. These basins typically form closed-basin systems where no surface or subsurface flow leaves the region. However, water may move through the permeable deposits and actually move between basins in a complex hydrogeologic relationship as illustrated in Figure 3b. Most ground water in this region is obtained from the permeable sand and gravel deposits that are interbedded with finer-grained layers of saturated silts and clays.

The alluvial deposits of the Puget Sound were deposited by sediment-laden meltwater from successive glaciations. Thick layers of permeable sands and gravels that are interbedded with discontinuous clay layers provide the majority of the water resources for this area. The Willamette Valley consists of interbedded sands, silts and clays deposited by the Willamette River and related streams. High precipitation rates in the region provide the major source of recharge to these aquifers.

The mountains bordering these alluvial basins consist of igneous and metamorphic rocks ranging from Precambrian to Tertiary in age. The limited water resources in the mountains are derived from water stored in fractures in the bedrock.

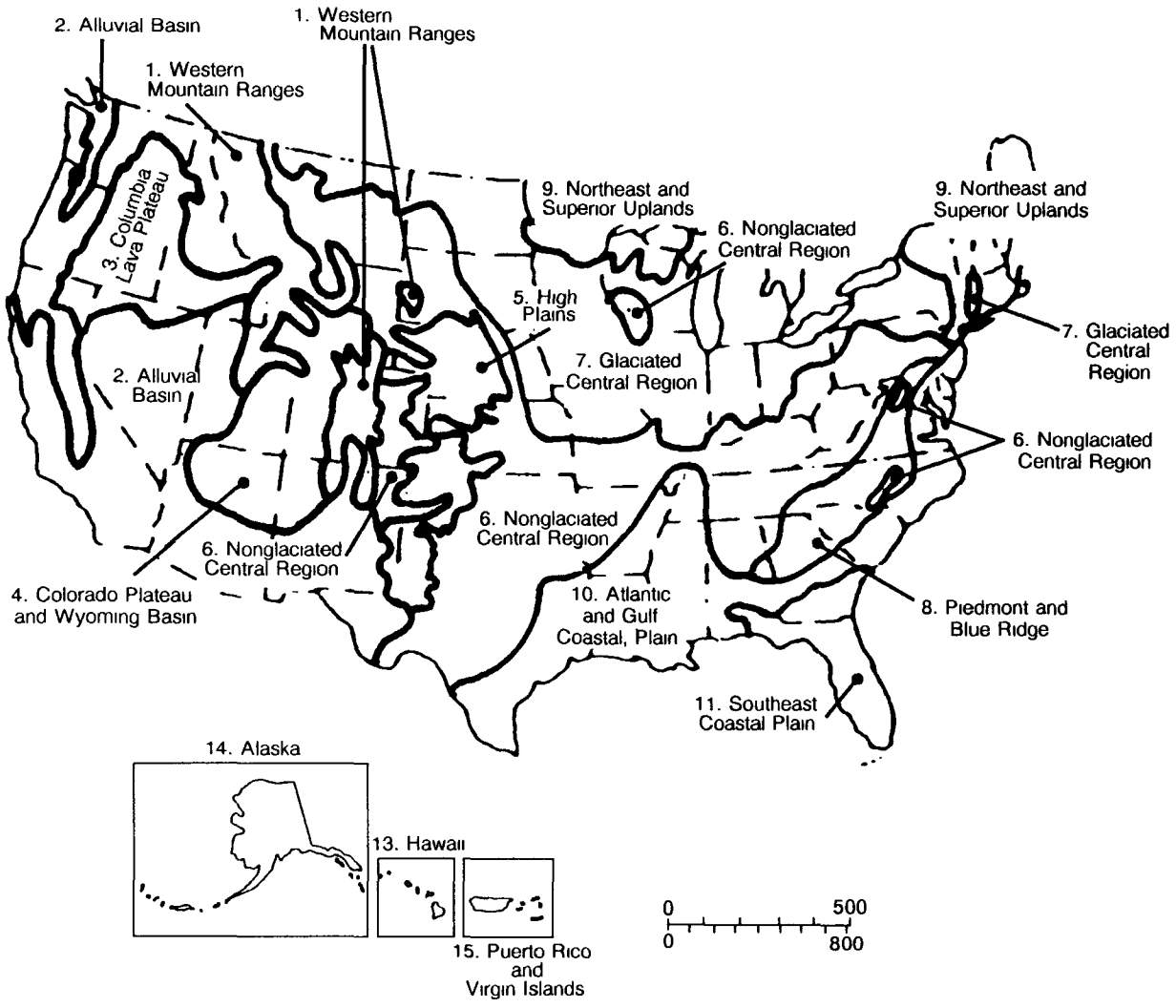

Figure 1. Ground-water regions of the United States (Heath, 1984).

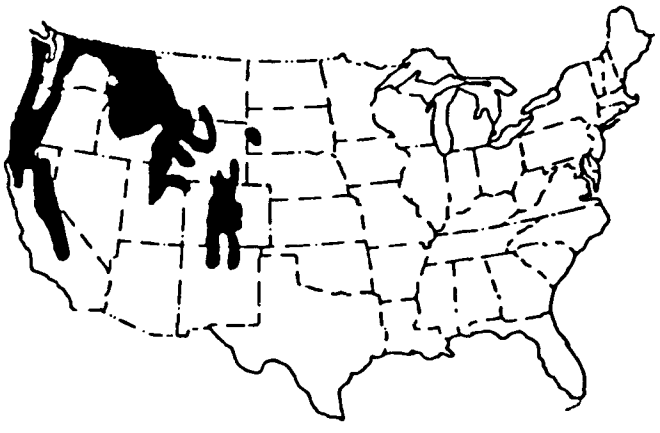

(a)

Figure 2a. Location of the Western Mountain Ranges region (Heath, 1984).

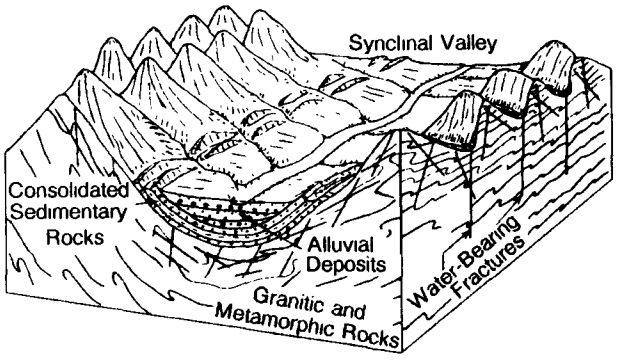

(b)

Figure 2b. Topographic and geologic features in the southern Rocky Mountains part of the Western Mountain Ranges region (Heath, 1984).

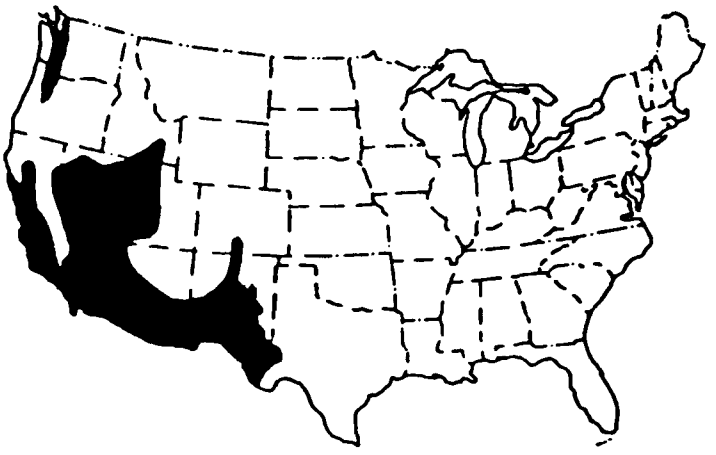

(a)

Figure 3a. Location of the Alluvial Basins region (Heath, 1984).

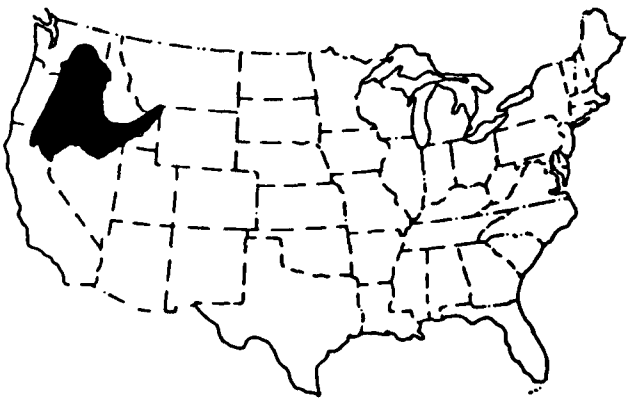

(a)

Figure 4a. Location of the Columbia Lava Plateau region (Heath, 1984).

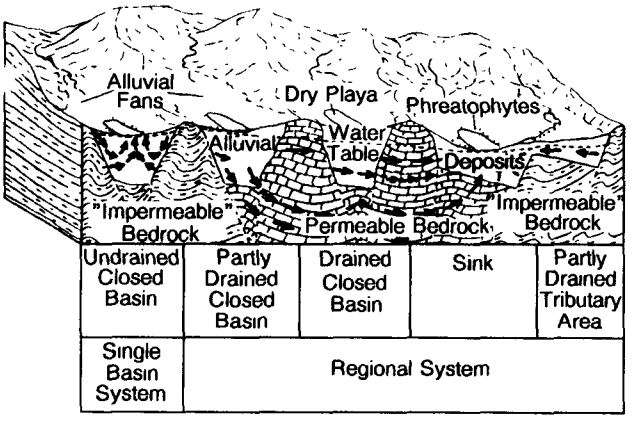

(b)

Figure 3b. Common ground-water flow systems in the Alluvial Basins region (Heath, 1984).

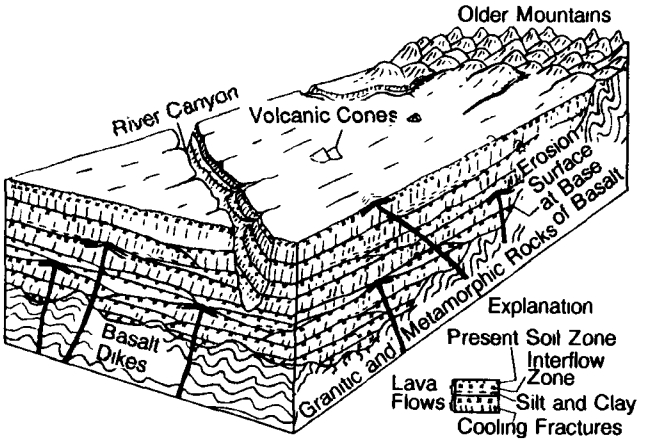

(b)

Figure 4b. Topographic and geologic features of the Columbia Lava Plateau region (Heath, 1984).

Columbia Lava Plateau —

The Columbia Lava Plateau consists of a sequence of lava flows ranging in total thickness from less than 150 feet adjacent to mountain ranges to over 3,000 feet in south-central Washington and northern Idaho (Figure 4a). The lava is composed of basalt that erupted from extensive fissures and produced large sheet-like flows. The lava beds comprise the principal water-bearing unit in the region.

Ground water in basalt flows through the permeable zones that occur at the contacts between the lava flow layers (Figure 4b). The permeable zones result from the cooling of the crust on the molten lava as it continues to flow thus producing a zone of fragments and gas bubbles near the top of the lava sheet. Cooling of the lava sheet itself also produces vertical fracturing within the basalt. These interflow zones, created by the cooling crust, form a complex series of relatively horizontal aquifers separated by denser layers of basalt that are often hydraulically interconnected by the intersecting fractures and faults within the lava sheets.

The region can be divided into two separate hydrogeologic flow regimes. The Columbia River Group, in the western part of this region, consists of relatively thick basalt flows that have been offset by normal faults. Primary water movement is through shallow interflow zones. The aquifers are typically poorly hydraulically interconnected because the flow is controlled by the faults which form barrier-controlled reservoirs.

The remainder of the region, occupied by the Snake River Plain, consists of a series of thin lava flows with well-developed interflow zones and extensive fracturing. These interflow zones exhibit high hydraulic conductivities and are hydraulically interconnected by cooling fractures. The large differences in hydraulic conductivity between the interflow zones and the denser basalt often result in significant differences in hydraulic head between aquifers. Consequently, there is the potential for the movement of water between aquifers through uncased or improperly cased wells.

Recharge to the aquifer is from precipitation and infiltration from streams that flow onto the plateau from adjacent

mountains. Irrigation of crops in this region provides additional recharge to the aquifer through the interflow zones when the source of water is not from the aquifer.

Colorado Plateau and Wyoming Basin —

The Colorado Plateau and Wyoming Basin region is characterized by a broad structural plateau underlain by horizontal to gently dipping beds of consolidated sedimentary rock. In some areas, the structure of the plateau has been modified by faulting and folding that resulted in basin and dome features. The region contains small, isolated mountain ranges as well as extinct volcanoes and lava fields (Figures 5a and 5b).

The sedimentary rocks in this region consist of Paleozoic- to Cenozoic-age sandstones, limestones and shales. Evaporitic rocks such as gypsum and halite also occur in some areas. The sandstones serve as the principal source of ground water. Water within the sandstone is contained within pore spaces and in fractures and bedding planes. Minor deposits of unconsolidated alluvium occur in major river valleys and contribute small to moderate yields of ground water.

Recharge to the aquifers is from precipitation and from infiltration from streams that cross the outcrop areas. The gentle dip of the beds causes unconfined conditions in outcrop areas and confined conditions downdip. Aquifers in the region frequently contain mineralized water at depth. Aquifers typically discharge to springs and seeps along canyon walls.

High Plains —

The High Plains region represents a remnant of an alluvial plain deposited by streams and rivers that flowed eastward from the Rocky Mountains during the Tertiary period. Extensive erosion has subsequently removed a large portion of the plain, including most areas adjacent to the mountains.

The High Plains region is underlain primarily by the Ogallala formation, a thick deposit of semi-consolidated alluvial materials consisting of poorly-sorted sands, gravels, silts and clays (Figures 6a and 6b). The Ogallala formation is the major aquifer and is overlain locally by younger alluvial material that is often saturated and forms a part of the aquifer. In places where the Ogallala is absent, these younger alluvial deposits, that are comprised of unconsolidated sand, gravel, silt and clay, are used as the major aquifer. Extensive areas of surficial sand dunes are also present. In some areas, older underlying consolidated deposits that include the fine-grained sandstones of the Arikaree Group and Brule formation are

(a)

Figure 5a. Location of the Colorado Plateau and Wyoming Basin region (Heath, 1984).

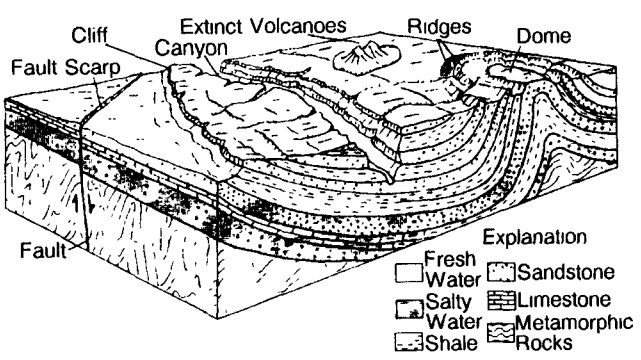

(b)

Figure 5b. Topographic and geologic features of the Colorado Plateau and Wyoming Basin region (Heath, 1984).

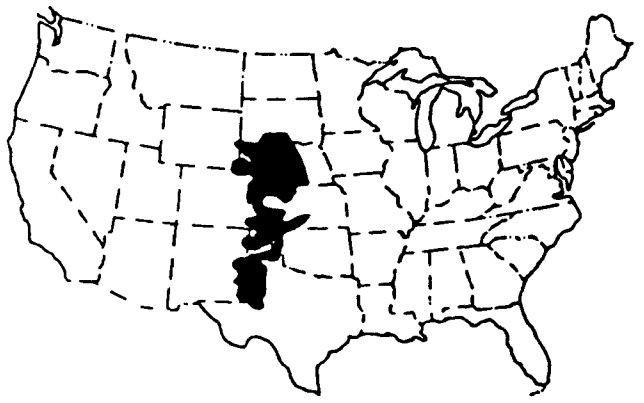

(a)

Figure 6a. Location of the High Plains region (Heath, 1984).

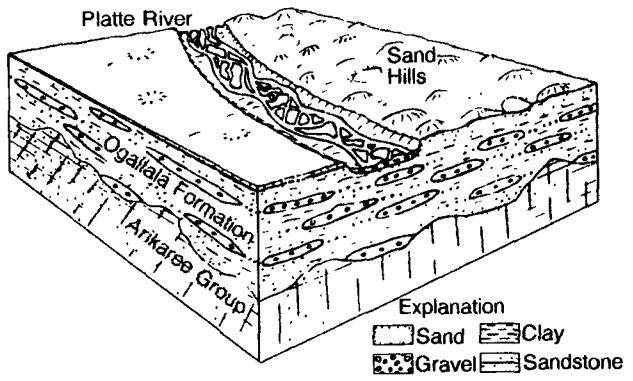

(b)

Figure 6b. Topographic and geologic features of the High Plains region (Heath, 1984).

hydraulically connected to the Ogallala. Where these deposits are absent, the Ogallala is underlain by other sedimentary rocks that often contain unusable, highly mineralized water.

Recharge to the aquifer from precipitation varies across the area. The presence of caliche, a low permeability calcium carbonate layer at or near the land surface, limits the amount of precipitation that infiltrates to the aquifer, thereby increasing the amount of water lost to evapotranspiration. In the sand dunes area, however, the permeability of the surface materials allows increased recharge to the aquifer.

Extensive development of the aquifer for agricultural irrigation has led to long-term declines in water levels. Where ground-water withdrawal rates have exceeded available recharge to the aquifer, ground-water mining has occurred. The depletion of water from storage in the High Plains region has resulted in a decrease in the saturated thickness of the aquifer in areas of intensive irrigation.

Nonglaciated Central Region —

The Nonglaciated Central region covers a geologically complex area extending from the Appalachian Mountains to the Rocky Mountains. Most of the region is underlain by consolidated sedimentary rocks, including sandstones, shales, carbonates and conglomerates that range from Paleozoic to Tertiary in age (Figures 7a, 7b and 7c). These rocks are typically horizontal to gently dipping with the exception of a few areas, notably the Valley and Ridge section; the Wichita and Arbuckle mountains in Oklahoma; the Ouachita Mountains in Oklahoma and Arkansas; and the Triassic basins in Virginia and North Carolina. The Triassic basins contain interbedded shales, sandstones and conglomerates that have been faulted and invaded by igneous rocks.

Chemical and mechanical weathering of the bedrock has formed a layer of regolith that varies in thickness and composition depending on the composition and structure of the underlying parent rock and the effects of climate and topography. The sandstones and limestones constitute the major aquifers in the area. Water occurs primarily in bedding planes and fractures in the bedrock. Many of the limestones contain solution channels that increase the permeability. Limestones in this region often form extensive cave systems that directly affect patterns of ground-water flow.

Recharge in the region occurs primarily from precipitation in outcrop areas and varies widely. Small to moderate well yields are common; higher yields may be available in karstic areas. Well yields often depend on the size and number of fractures intersected by the well, the recharge to the area and the storage capacity and permeability of the bedrock and/or regolith. In many parts of this region, mineralized water occurs at depths greater than 300 feet.

Glaciated Central Region —

The geology of the Glaciated Central region is characterized by relatively horizontal sedimentary rocks of Paleozoic to Tertiary age consisting of sandstones, shales and carbonates. The bedrock is overlain by varying thicknesses of poorly-sorted glacial till that is interbedded with: 1) well-sorted sands and gravels deposited from meltwater streams, 2) clays and silts

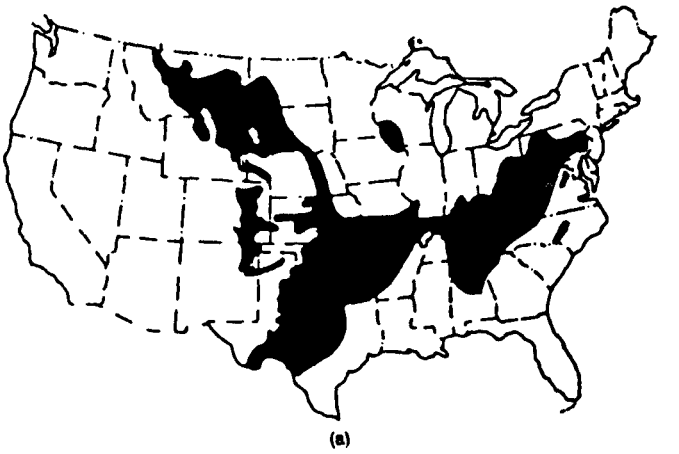

(a)

Figure 7a. Location of the Nonglaciated Central region (Heath, 1984).

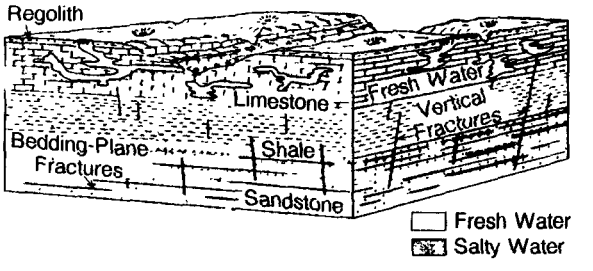

(b)

Figure 7b. Topographic and geologic features of the Nonglaciated Central region (Heath, 1984).

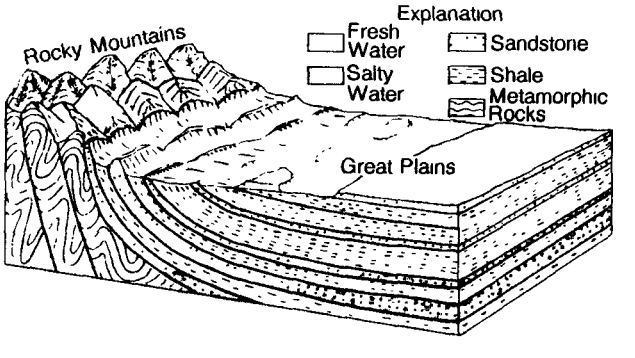

(c)

Figure 7c. Topographic and geologic features along the western boundary of the Nonglaciated Central region (Heath, 1984).

from glacial lake beds and 3) wind-blown silt or loess deposits (Figures 8a and 8b).

In the eastern part of the region, the glacial deposits are typically thin on the uplands and thicken locally in valleys. Toward the central and western parts of the region, glacial deposits are thicker and often mask the location of preglacial river valleys. These thick deposits in the preglacial river valleys often contain permeable sands and gravels that form major aquifers with significant well yields. Overlying till deposits often act as confining layers for the underlying sand and gravel aquifers.

The underlying bedrock in this region also commonly serves as an aquifer. Water occurs primarily along bedding planes and in fractures. Frequently the glacial deposits and the bedrock are hydraulically interconnected. The glacial deposits often provide recharge to the bedrock aquifers and serve as a source of water for shallow wells. Movement of poor-quality water from the bedrock into the glacial deposits may cause local ground-water quality problems. Recharge to the glacial deposits is provided by precipitation and by infiltration from streams. Recharge rates primarily vary with precipitation rates, evapotranspiration rates, permeability of the glacial materials and topography.

Ground-water supplies are abundant in this area; well yields are moderate to high. Smaller yields are expected in areas where the glacial deposits are fine-grained or where the underlying bedrock has an insufficient amount of fractures or solutioning. Because of the widespread occurrence of carbonate rocks, ground water in these areas frequently exhibits high hardness.

Piedmont and Blue Ridge —

The Piedmont lies between the coastal plain and the Appalachian Mountains. The region is characterized by a series of low, rounded hills that gradually increase in height toward the west and culminate in the parallel ranges of the Appalachian Mountains in the north and the Blue Ridge Mountains in the south. The bedrock of the region consists of Precambrian to Mesozoic-age igneous, metamorphosed-igneous and sedimentary rocks (Figures 9a and 9b).

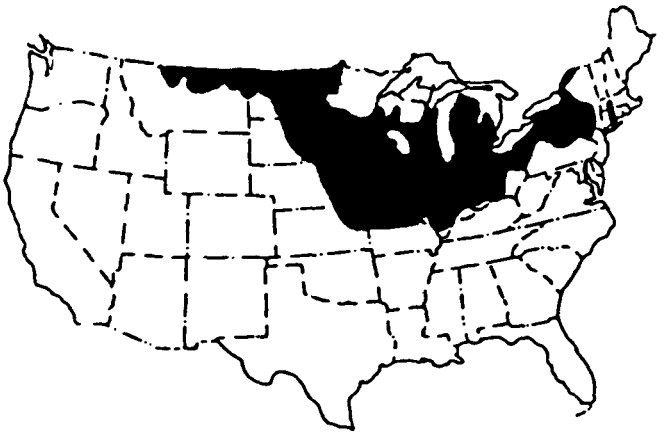

(a)

Figure 8a. Location of the Glaciated Central region (Heath, 1984).

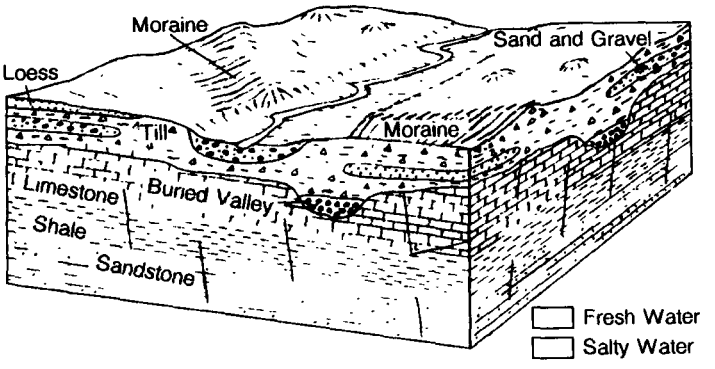

(b)

Figure 8b. Topographic and geologic features of the Glaciated Central region (Heath, 1984).

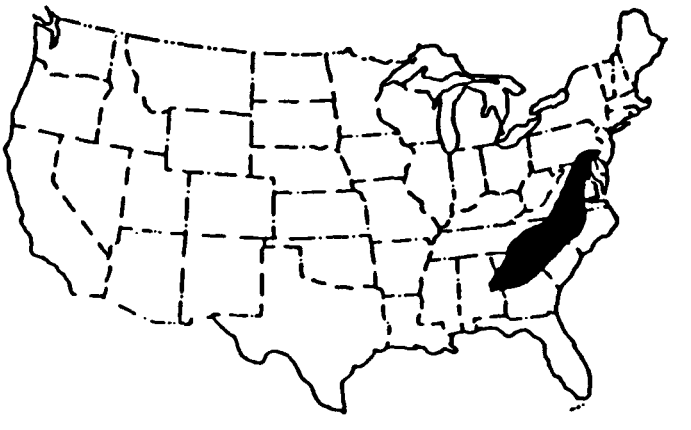

(a)

Figure 9a. Location of the Piedmont and Blue Ridge region (Heath, 1984).

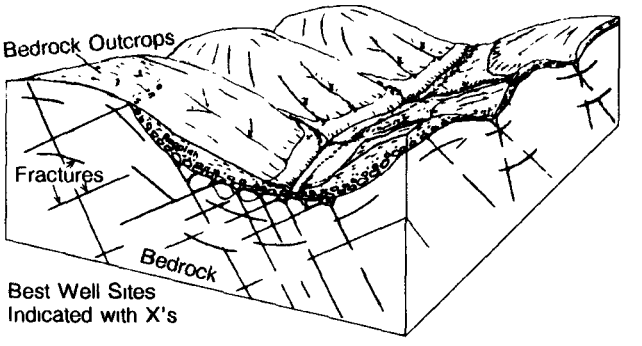

(b)

Figure 9b. Topographic and geologic features of the Piedmont and Blue Ridge region (Heath, 1984).

Active chemical and physical weathering of the bedrock has formed a clay-rich, unconsolidated deposit that overlies bedrock. This deposit, called saprolite or regolith is typically thinner on ridges and thickens on slopes and in valleys. Larger streams in many valleys have deposited significant thicknesses of well-sorted alluvial materials that often overlie the saprolite.

The regolith serves two purposes in the ground-water system: 1) the regolith yields small to moderate quantities of water to shallow wells and 2) the regolith serves as a storage reservoir to slowly recharge the bedrock aquifer. The storage capacity in the bedrock is limited because the ground water occurs along fractures and in joints. Water-supply wells are often completed in both the regolith and in the bedrock.

Well yields in this region are extremely variable; bedrock wells that intersect fractures and/or have sufficient recharge from the overlying regolith are the most productive. A higher density of fractures typically occurs along valleys and in draws bordering ridges.

Northeast and Superior Uplands —

The Northeast and Superior Uplands cover two geographic areas: 1) the Northeast includes the Adirondack Mountains and most of New England, and 2) the Superior Uplands include most of northern Minnesota and Wisconsin. Both areas are underlain by Precambrian to Paleozoic-age igneous and metamorphic rocks that have been intruded by younger igneous rocks and have been extensively folded and faulted (Figures 10a and 10b).

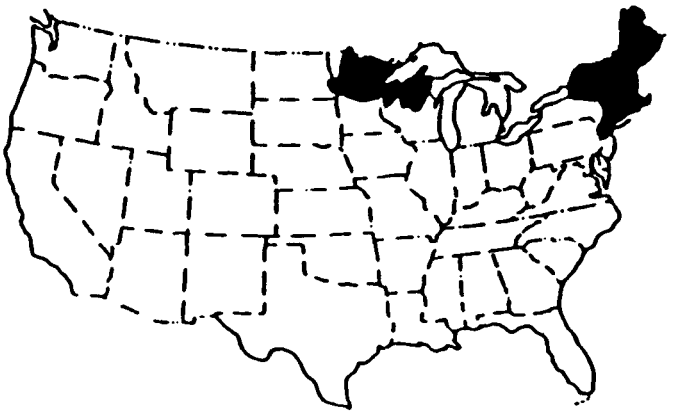

(a)

Figure 10a. Location of the Northeast and Superior Uplands region (Heath, 1984).

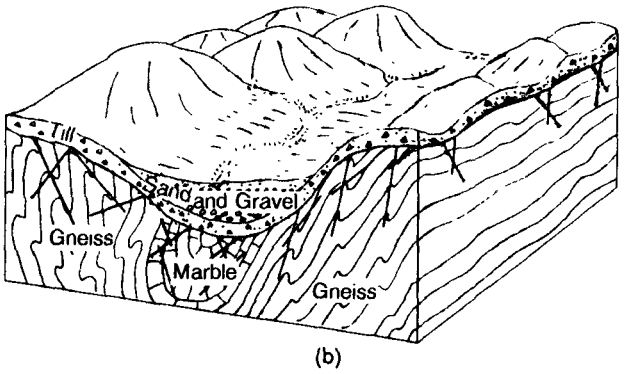

(b)

Figure 10b. Topographic and geologic features of the Northeast and Superior Uplands region (Heath, 1984).

The bedrock is overlain by unconsolidated glacial deposits that vary in thickness. These glacial deposits include poorly-sorted glacial tills, glacial lake clays, and well-sorted sands and gravels laid down by meltwater streams. The glacial sands and gravels serve as important aquifers and are capable of producing moderate to large yields. Ground water in the bedrock is typically found in fractures or joints and the rock has a low storage capacity. The glacial deposits provide recharge by slow seepage to the underlying bedrock. Wells are often completed in both bedrock and the glacial deposits to provide maximum yields. Recharge to the glacial deposits occurs primarily from precipitation.

Atlantic and Gulf Coastal Plain —

The Atlantic and Gulf Coastal Plain region extends southward from Cape Cod to the Rio Grande River in Texas. The region is underlain by Jurassic to Recent-age semi-consolidated to unconsolidated deposits of sand, silt and clay laid down by streams draining the adjacent upland areas. These deposits are very thin toward the inner edge of the region and thicken southward and eastward. The thickest deposits occur in a downwarped zone termed the Mississippi Embayment. All deposits either dip toward the coast or toward the axis of the embayment; therefore, the older formations outcrop along the inner part of the region and the youngest outcrop along the gulf coastal area. Coarser-grained material is more abundant updip, and clay and silt layers tend to thicken downdip (Figures 11a and 11b). Limestone and shell beds also occur in some areas and serve as productive and important aquifers.

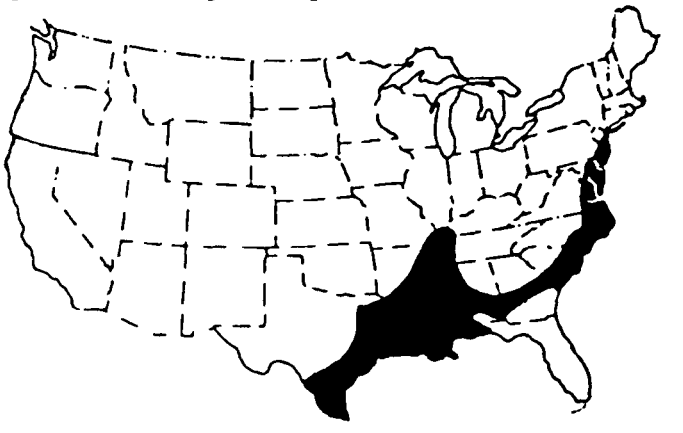

(a)

Figure 11a. Location of the Atlantic and Gulf Coastal Plain region (Heath, 1984).

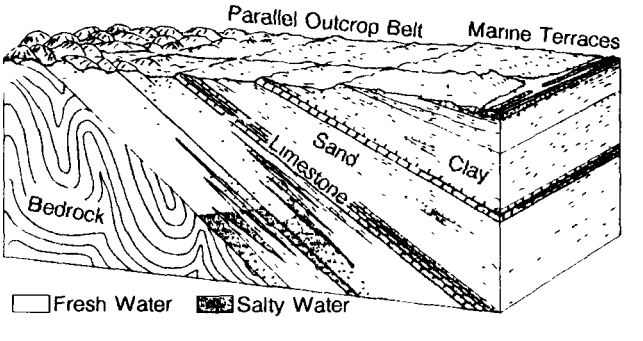

(b)

Figure 11b. Topographic and geologic features of the Gulf Coastal Plain (Heath, 1984).

Recharge to the aquifer occurs in outcrop areas from precipitation and from infiltration along streams and rivers. In some areas an increase downdip in the percentage of clay in the deposits limits recharge and affects ground-water flow paths. Ground-water withdrawals in these areas sometimes exceed recharge to the aquifer and result in declining water levels and land subsidence.

Southeast Coastal Plain —

The Southeast Coastal Plain includes all of Florida and the southern parts of Alabama and Georgia. The surficial deposits in this area are comprised of unconsolidated Pleistocene-age sand, gravel, silt and shell beds. The semi-consolidated limestone beds of the Biscayne aquifer outcrop in southern Florida. Throughout much of the region, surficial deposits are underlain by the Hawthorn formation, a Miocene-age clay and silt layer. The Hawthorn formation often serves as a confining layer. The Hawthorn formation overlies a thick sequence of semi-consolidated to consolidated limestones and dolomites known as the Floridan aquifer (Figures 12a and 12b).

The Floridan aquifer is one of the most productive aquifers in the United States and is the principal ground-water resource for the entire region. In the northern part of the region, the Floridan is unconfined. Most recharge to the aquifer occurs from direct infiltration of precipitation in this area. In central and southern Florida, the aquifer is semi-confined by the Hawthorn formation and recharge from the surface is limited. Natural discharge from the Floridan occurs from springs and streams and from seepage through confining beds. Many springs with high discharge rates can be found where the Floridan outcrops.

In southern Florida, water in the Floridan is typically saline. In this area, water supplies are developed in the shallower Biscayne aquifer. The Biscayne is unconfined and is recharged directly by precipitation and by infiltration from streams and impoundments.

The surficial sands and gravels also serve as aquifers in many parts of the region, particularly where the Floridan is saline. These aquifers supply small to moderate yields to wells and are recharged by infiltration of precipitation.

Alluvial Valleys —

The Alluvial Valleys region encompasses the thick sand and gravel deposits laid down by streams and rivers. Figure 13a illustrates the extent and location of these major alluvial valleys. Alluvial valleys typically contain extensive deposits of sands and gravels that are often interbedded with overbank deposits of silts and clays. The origin of many of the alluvial aquifers is related to Pleistocene continental and alpine glaciation. Sediment-laden meltwater from the glaciers deposited extensive sands and gravels in many stream valleys. These permeable sands and gravels are capable of yielding moderate to large water supplies to wells. These aquifers are typically confined to the boundaries of the flood plain and to adjacent terraces (Figure 13b).

In many of the alluvial valleys, ground-water systems and surface water systems are hydraulically interconnected. Recharge to the aquifer occurs from streams and from precipitation. Withdrawals of ground water near a stream may cause a reversal of hydraulic gradients; ground water previously flowing from the aquifer and discharging to the stream may now receive recharge from the stream by induced infiltration.

Hawaiian Islands —

The Hawaiian Islands were formed by volcanic eruptions of lava. These shield volcanoes rise from the ocean floor and form the eight major Hawaiian islands. Erosion of the volcanoes has carved distinctive valleys and has created an adjacent narrow coastal plain.

The islands are formed from hundreds of separate lava flows composed primarily of basalt. The lavas that were extruded beneath the sea are relatively impermeable. Lavas that were extruded above sea level contain permeable interflow zones, lava tubes and cracks and joints formed while the lava cooled. Lava flows in the valleys are often covered by a thin layer of alluvium eroded from the basalt.

The mode of deposition of the basalt largely controls the occurrence and flow of ground water on the islands. The ground-water system consists of three major parts: 1) dike-impounded water, 2) basal ground water, and 3) perched

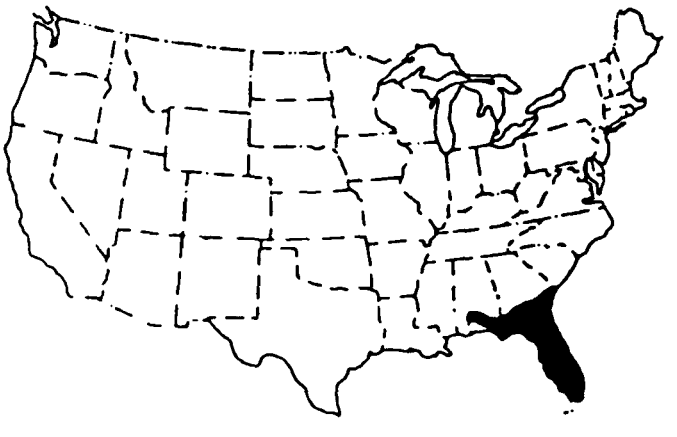

(a)

Figure 12a. Location of the Southeast Coastal Plain Region.

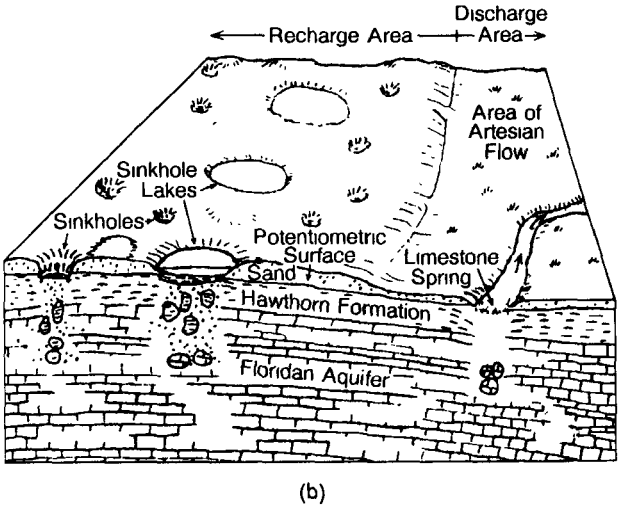

(b)

Figure 12b. Topographic and geologic features of the Southeast Coastal Plain (Heath, 1984).

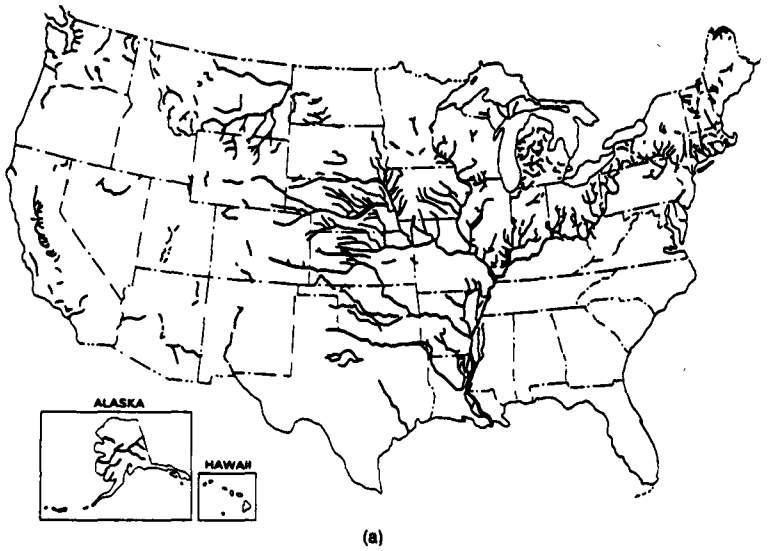

(a)

Figure 13a. Location of the Alluvial Valleys ground-water region (Heath, 1984).

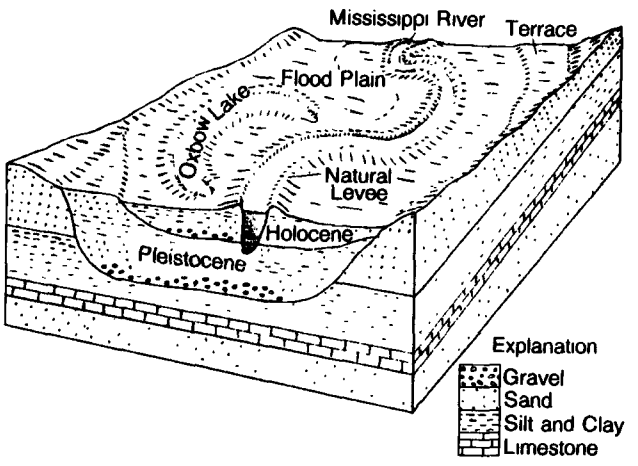

(b)

Figure 13b. Topographic and geologic features of a section of the alluvial valley of the Mississippi River (Heath, 1984).

(fresh) water (Figure 14). Dike-impounded water is found in the joints developed along the vertical fissures through which the lava erupted. Basal ground water is found in the permeable zones of the horizontal lava flows extending from the eruption centers and is partially hydraulically interconnected to the dike-impounded water. The perched (fresh) water system is found in permeable lava or alluvial deposits above thick impermeable lava flows or basal ground water.

Recharge to these aquifers occurs through the infiltration of precipitation. Because the volcanic soils are highly permeable, approximately thirty percent of the precipitation infiltrates and recharges the aquifer.

The basal ground-water system is the principal source of water to the islands. The basal system occurs as a fresh-water lens floating on the denser sea water. Basal and dike-impounded ground water is often withdrawn from horizontal tunnels and vertical and inclined wells constructed into the lava flows.

Alaska —

Alaska can be divided into four physiographic divisions from south to north: 1) the Pacific Mountain System, 2) the Intermontane Plateaus, 3) the Rocky Mountain System and 4) the Arctic Coastal Plain. The mountain ranges are comprised of Precambrian to Mesozoic-age igneous and metamorphic rocks. These are overlain by younger sedimentary and volcanic rocks. Much of the region is overlain by unconsolidated deposits of gravel, sand, silt, clay and glacial till (Figure 15).

Climate directly affects the hydrology of Alaska. Much of the water at the surface and in the subsurface is frozen throughout much of the year, forming a zone of permafrost or perennially frozen ground. Permafrost occurs throughout the state

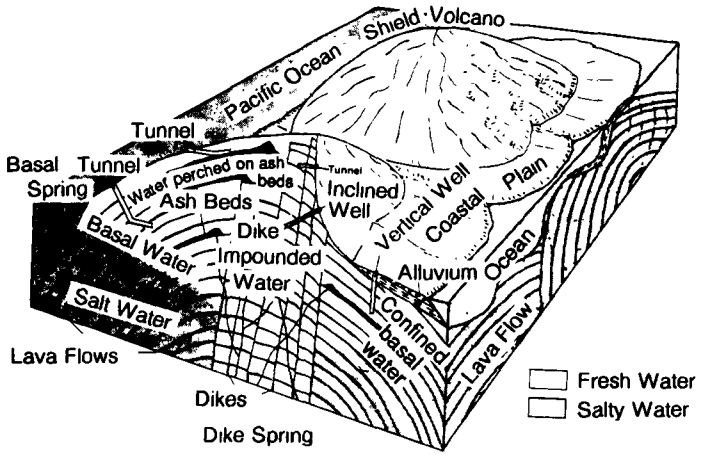

Figure 14. Topographic and geologic features of an Hawaiian Island (Heath, 1984).

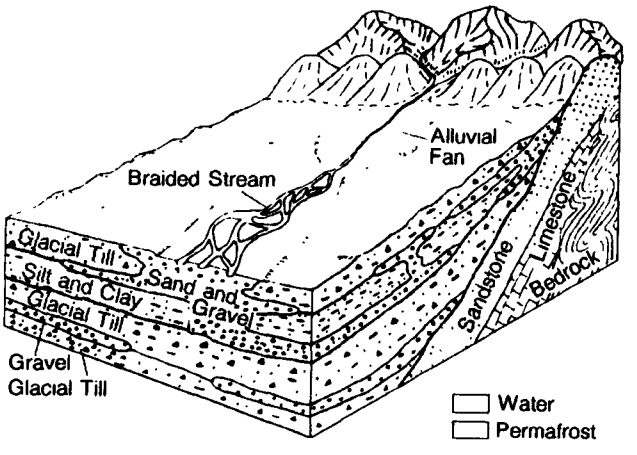

Figure 15. Topographic and geologic features of parts of Alaska (Heath, 1984).

except along the southern and southeastern coasts. The depth of permafrost varies, but is typically deeper in the northern areas and becomes shallower toward the south.

In zones of continuous permafrost, ground water occurs beneath the permafrost and in isolated zones beneath deeper lakes and alluvial channels. In zones of discontinuous permafrost, ground water occurs below the permafrost and in sand and gravel deposits in major alluvial valleys. In the areas where permafrost is absent, ground water occurs both in the bedrock and in the overlying unconsolidated deposits.

Recharge to the aquifers is limited due to permafrost. Even in non-permafrost areas, shallow ground water is usually frozen when spring runoff occurs. Most recharge to the aquifers occurs from stream infiltration as the streams flow across the alluvial deposits when permafrost is absent.

Site-Specific Geologic and Hydrogeologic Conditions

The geologic and hydrogeologic conditions at a specific site influence the selection of an appropriate well design and drilling method. Prior to the installation of monitoring wells, exploratory borings and related subsurface tests must usually be made to define the geology beneath the site and to assess ground-water flow paths and velocity. Formation samples and other data collected from this work are needed to define the hydraulic characteristics of the underlying materials. The logs of these borings are used to correlate stratigraphic units across the site. An understanding of the stratigraphy, including the horizontal continuity and vertical thickness of formations beneath the site, is necessary to identify zones of highly permeable materials or features such as bedding planes, fractures or solution channels. These zones will affect the direction of ground-water flow and/or contaminant transport beneath the site. Because the occurrence and movement of ground water in the subsurface are closely related to the geology, the geologic conditions at the site influence the location, design and methods used to install monitoring wells.

The required depth of a monitoring well is determined by the depth to one or more water-bearing formations that need to be monitored. Where two or more saturated zones occur beneath a site and the intent of the monitoring program is to monitor water quality in the lower zone, the monitoring well may require surface casing to "seal-off" the upper water-bearing formation prior to drilling deeper.

The formations at the site, whether consolidated or unconsolidated, also influence the type of well completion. In unconsolidated deposits, screened intakes are typically designed. The well may have either a naturally-developed or artificially-emplaced filter pack, depending on the grain-size distribution of the water-bearing materials. Artificial filter packs and screened intakes are also often required in poorly-consolidated formations to minimize potential caving of the borehole and/or to reduce turbidity in water samples collected from the completed well. In some consolidated formations, the well may be completed as a cased borehole with no screen intake or filter pack. Where conduit-born fines are a problem in consolidated formations, an artificial filter pack and a screen intake may be required.

Drilling methods must be chosen based at least in part on geologic considerations. Hard, consolidated formations restrict or eliminate certain drilling methods. For example, in karstic formations, cavernous openings create significant problems in maintaining circulation and in protecting drilling equipment. Unconsolidated deposits can also present severe limitations for various drilling methods. Some drilling techniques cannot be used where large boulders are present. Conversely, cohesive geologic deposits and the resultant stability of the borehole may expand drilling options. Variations in equipment, drilling techniques and installation procedures may be necessary to overcome specific limitations when using particular drilling methods.

Consideration of the hydrogeology at the site is also important when selecting a drilling method. The depth to which the well must be drilled to monitor a selected water-bearing zone may exceed the practical depths of a particular drilling technique. In addition, certain saturated geologic materials, under high hydrostatic pressures, may either: 1) impose increased frictional resistance (i.e. expanding clays) which limits the practical depths reached by some drilling methods or 2) create unstable borehole conditions (i.e. heaving sands) that may preclude the use of some drilling methods for installation of the monitoring well.

For a complete discussion of well drilling methods and a matrix for selecting a drilling method based on the general hydrogeologic conditions and well design requirements, the reader is referred to Section 4, "Description and Selection of Drilling Methods."

Facility Characteristics

Frequently the purpose of a monitoring program is to evaluate whether or not ground water is being contaminated from a waste disposal practice or a commercial operation associated with the handling and storage of hazardous materials. In these instances, the design and construction of the monitoring wells must take into account the type of facility being monitored and the fate and transport in the subsurface of the waste materials or commercial products.

Recognition of the type of facility being monitored is necessary to determine whether the facility is regulated under existing federal and/or stage statutes and administrative rules (see Section 1). Some regulated facilities must comply with specific ground-water monitoring requirements, and program-specific guidance documents may describe the design and construction of the monitoring wells. The type of facility or operation may also determine the types of materials and potential contaminants which have been handled onsite, past or present, and whether or not those contaminants were stored or disposed of on or below the ground surface. The design of the facility may also include a system for waste or product containment that impacts potential release of contaminants, both onsite and offsite, and may require separate monitoring.

The physical and chemical characteristics of the contaminants, including volatility, solubility in water and specific density, influence the movement of the contaminant in the subsurface. Additional factors that affect contaminant fate and transport include: oxidation, sorption and biodegradation.

Monitoring wells must be located and designed with these environmental factors and contaminant characteristics in mind. Construction materials for the well should be selected based on their ability to withstand attack by contaminants that are anticipated at the site.

The following two-part discussion focuses on facility characteristics that impact the design and construction of monitoring wells. The first part presents the more prominent types of waste disposal facilities or commercial operations for which ground-water monitoring wells are designed. The second part focuses on those physical and chemical characteristics of contaminants that significantly influence the transport of the contaminant in the subsurface.

Type of Facility

Landfills —

A landfill is a facility or waste unit where solid waste is typically disposed of by spreading, compacting and covering the waste. The landfill design, construction and operation details vary depending on the physical conditions at the site and the type and amount of solid waste to be disposed. Wastes are usually emplaced and covered in one of three settings: 1) on and above the natural ground surface where surface topography is flat or gently rolling, 2) in valleys, ravines or other land depressions, or 3) in trenches excavated into the subsurface. The design of the landfill determines the boundaries of the fill area and the lowest elevation at which the solid waste is disposed. The physical dimensions of the landfill are important criteria for locating and designing the depth of monitoring wells used to monitor the quality of ground water in the first water-bearing zone beneath the bottom of the landfill.

The wastes that are disposed of in landfills are generally classified as either hazardous or non-hazardous. Wastes that are characterized as hazardous are regulated in Title 40 of the United States Code of Federal Regulations (CFR) Part 261. The distinction between a landfill receiving hazardous waste versus non-hazardous waste is important from a regulatory standpoint when developing a ground-water monitoring program. Landfills receiving wastes classified as hazardous are subject to minimum federal regulations for the design and operation of the landfill (40 CFR, Parts 264 and 265, Subpart N and Part 268) and for ground-water protection and monitoring (40 CFR, Parts 264 and 265, Subpart F). These regulations are mandated under the Resource Conservation and Recovery Act (RCRA) and subsequent amendments to RCRA. Individual states may be authorized by the United States Environmental Protection Agency to enforce the minimum federal regulations and may adopt separate state regulations more stringent than the federal standards.

Landfills receiving non-hazardous wastes are also regulated under RCRA; however, these facilities are addressed under different federal guidelines or recommendations for the design and operation of sanitary landfills and for ground-water protection measures (40 CFR, Part 241, Subpart B). Properly designed landfills should include a bottom liner of compacted, low permeability soil and/or synthetic liner to minimize the percolation of leachate from the landfill into the subsurface. A leachate collection system should also be installed beneath the landfill to control leachate migration and permit the collection of leachate for final treatment and disposal. Hazardous waste landfills are subject to minimum, federal technological guidelines for "composite double liner systems" (including compacted low permeability soils and two flexible synthetic membranes) that incorporate both primary and secondary leachate collection systems. Many older or abandoned landfills containing both hazardous and/or non-hazardous wastes are unlined and have been unregulated throughout the operational life of the facility.

Ground-water monitoring programs at hazardous waste land disposal facilities are also subject to federal requirements, including performance criteria. The regulations require that a sufficient number of wells be constructed at appropriate locations and depths to provide ground-water samples from the uppermost aquifer. The purpose of ground-water monitoring is to determine the impact of the hazardous waste facility on ground water in the uppermost aquifer. This is done by comparing representative samples of background water quality to samples taken from the downgradient margins of the waste management area. The ground-water monitoring wells must be properly cased, completed with an artificial filter pack, where necessary, and grouted so that representative ground-water samples can be collected (40 CFR, Sections 264.97 and 265.91). Guidance for the design and construction of these monitoring wells is provided in the RCRA Ground Water Monitoring Technical Enforcement Guidance Document (TEGD). Owners and operators should be prepared to provide evidence that ground-water monitoring measures taken at concerned facilities are adequate.

A potential monitoring problem at all landfills, particularly older facilities, is the accurate location of the boundaries of the landfill. If the boundaries of the fill area are unknown, monitoring wells may not be accurately placed to properly define subsurface conditions with respect to the actual location of the disposal site. Accidental drilling into the landfill causes safety and health concerns. All personnel involved in the drilling of monitoring wells at hazardous waste treatment, storage and disposal facilities, or in the direct supervision of such drilling, should have received initial training in working in hazardous environments in accordance with the regulations of the Occupational Safety and Health Administration (29 CFR, Section 1910.120).

Surface Impoundments —

Surface impoundments are used for the storage, treatment and/or disposal of both hazardous and non-hazardous liquid wastes. Impoundments or lagoons can be constructed either in natural depressions or excavations or created by surface diking. The impoundments typically are used to settle suspended solids. Liquid wastes within the impoundment are usually treated chemically to cause precipitation or coagulation of wastes. Surface impoundments may be either "discharging" or "non-discharging." Discharging impoundments are designed to intentionally permit the supernatant fluid to overflow into receiving streams for final treatment and disposal. Non-discharging impoundments can either intentionally or unintentionally lose liquids through seepage into the subsurface or through evaporation.

The size of a surface impoundment can range from a fraction of an acre to thousands of acres in surface area. The

depths of these impoundments reportedly range from 2 feet to more than 30 feet below the ground surface (Office of Technology Assessment, 1984). The specific design and operation requirements for surface impoundments that contain hazardous materials are regulated under RCRA (40 CFR, Parts 264 and 265, Subpart K). To prevent waste infiltration, hazardous waste impoundments are subject to minimum federal technological guidelines for a "compacted soil double liner system" (including compacted, low permeability soil and a single flexible synthetic liner). A leachate collection system is also required to contain any leachate that does infiltrate into the subsurface.

Hazardous waste impoundments are subject to the same minimum federal ground-water protection and monitoring regulations discussed above for hazardous waste landfills. Water levels in monitoring wells located too close to impoundments often reflect the effects of mounding on the water table and lead to inaccurate interpretation of the water-level data (Beck, 1983). The design depth of the monitoring wells also depends on the depth of the bottom of the surface impoundment below ground level and the depth of the first water-bearing zone underlying the bottom of the impoundment.

Waste and Material Piles —

Large quantities of both wastes and materials may be stockpiled for storage. Stockpiled material may include potentially hazardous material such as highway deicing salts, copper, iron, uranium and titanium ore, coal, gypsum and phosphate rock. Hazardous waste piles can also be generated by other industrial operations and vary in composition. Waste piles typically include two types of mining wastes: 1) spoil piles and 2) tailings. Spoil piles are the overburden or waste rock removed during either surface or underground mining operations. Tailings are the solid wastes generated from the cleaning and extraction of ores. Both types of mining waste include waste rock that can contain potential contaminants such as uranium, copper, iron, sulfur and phosphate. Waste piles containing hazardous wastes are regulated under RCRA and are subject to minimum federal design and operational requirements (40 CFR, Parts 264 and 265, Subpart L) and ground-water protection requirements (40 CFR, Part 264, Subpart F), particularly where the waste piles are unprotected from precipitation and surface drainage. In many instances, waste and material piles remain uncovered and exposed to the atmosphere. Precipitation percolating through the material can dissolve and leach potentially hazardous constituents into the subsurface. For example, ground-water quality problems have occurred due to the dissolution of unprotected stock piles of highway deicing salt. Cyanide leaching to extract gold from mine tailings is potentially dangerous and a widespread problem in some areas. Surface runoff from stockpiles can also be a source of potential ground-water contamination. Ground-water monitoring efforts in waste and material pile areas need to be designed to detect or assess ground-water contamination occurring onsite and to determine that surface runoff has not contaminated adjacent areas.

Land Treatment —

Land treatment involves the application of waste liquids and sludges onto the ground surface for biological or chemical degradation of the waste or for the beneficial use of nutrients contained in the waste. Land treatment operations commonly involve spray irrigation or land spreading of sludges on agricultural, forested or reclaimed land. Municipal wastewater or sludge application to agricultural land is the most common form of land treatment. Industrial waste sludge includes effluent treatment waste, stack scrubber residue, fly ash, bottom ash and slag (Office of Technology Assessment, 1984). Control measures must be instituted to prevent surface runoff, wind erosion and excessive percolation into the ground water during site operation. The rate and duration of sludge application depends on the waste, soil type and the level of anticipated degradation.

Wastes applied to the ground surface at a land treatment facility may be hazardous or non-hazardous. Hazardous waste land treatment facilities are regulated under RCRA and are subject to minimum federal design and operational requirements (40 CFR, Parts 264 and 265, Subpart M) and applicable ground-water protection and monitoring requirements (40 CFR, Parts 264 and 265, Subpart F).

Underground Storage Tanks —

Underground storage tanks are used to store hazardous and nonhazardous waste, industrial products and raw materials. The primary industrial use for tanks is the storage of fuel oils. It is estimated that half of all steel tanks in use store petroleum products. Both steel and fiberglass tanks are also used to store other products including solvents, acids and technical grade chemicals.

Recent amendments to RCRA now specify design, maintenance and operation requirements for tanks containing hazardous waste and commercial petroleum products (40 CFR, Parts 264 and 265, Subpart J). These regulations include requirements for a double liner system and/or cathodic protection of steel tanks, leak detection and inventory control.

Radioactive Waste Disposal Sites —

Radioactive wastes are produced during the development and generation of nuclear fuel and other radioactive materials. Waste products include: 1) spent fuel from nuclear power plant operations, 2) high-level radioactive waste from initial processing of reactor fuels, 3) transuranic waste from fuel processing, 4) low-level wastes from power plants, weapons production, research and commercial activities and 5) medical waste (Office of Technology Assessment, 1984).

The radioactive waste disposal method depends on the radiation levels and the waste characteristics. Low-level radioactive wastes are usually disposed of in shallow burial sites. High-level radioactive wastes are stored in specially constructed facilities and may be reprocessed. Spent reactor fuels may be stored on site or transferred to disposal facilities.

All radioactive waste disposal facilities are regulated by the Nuclear Regulatory Commission. Ground-water monitoring requirements for specific facilities coupled with the design configuration of the facility directly affect the location and installation of monitoring wells.

Waste Characteristics

The physical and chemical characteristics of the waste(s) present at a site should be carefully evaluated and considered together with site hydrogeology when designing a monitoring program. The mechanisms that govern the fate and transport of contaminants in the subsurface affect the occurrence and con-

figuration of a contaminant plume. By considering these effects a monitoring program can be designed to monitor or detect subsurface contamination. The monitoring well locations, the depth of the screened intervals, the method of well installation and the appropriate construction materials must all be compatible with the specific waste and hydrogeological characteristics of the site.

Two physical properties that affect transport and fate of a compound in the subsurface are the relative solubility and density of the contaminant. Based on these properties, contaminants can be classified into categories that subsequently influence monitoring well design: 1) compounds that are primarily miscible/soluble in ground water and 2) compounds that are relatively immiscible/insoluble in ground water. These categories can be further subdivided based on the relative density of the compound.

Primarily Miscible/Soluble Contaminants —

This category of contaminants exhibits a relatively high solubility in water and typically is mobile in the subsurface. Soluble contaminants can exhibit densities greater than, less than or equal to water. In general, where the density of the contaminant closely approximates that of water, the contaminant moves in the same direction and with the same velocity as ground water.

The primary processes that affect dissolved contaminant transport in porous media include advection and dispersion (Freeze and Cherry, 1979; Anderson, 1984; Mackay et al., 1985). Advection is the process by which solutes are transported by the motion of ground water flowing in response to hydraulic gradient, where the gradient reflects the magnitude of the driving force. Dispersion refers to the dispersal of contaminants as they move with the ground water. Dispersion occurs by mechanical mixing and molecular diffusion. Seasonal changes in gradient may affect lateral movement of a contaminant more than dispersion. Interactions that occur between the contaminant and the porous media include retardation, sorption (Freeze and Cherry, 1979; Cherry et al., 1984; Mabey and Mill, 1984; Mackay et al., 1985) and biodegradation (McCarty et al., 1981; McCarty et al., 1984; Wilson et al., 1985). These mechanisms can affect the rate of movement of a contaminant plume or alter the chemistry within the plume.

The effects of contaminant density must also be considered in waste characterization (Bear, 1972). Figure 16 illustrates the migration of a high density, miscible contaminant in the subsurface. As shown, the contaminant sinks vertically through the aquifer and accumulates on top of the lower permeability boundary. The contaminant then moves in response to gravity and follows the topography of the lower permeability boundary, possibly in opposition to the direction of regional ground-water flow. Because the contaminant is also soluble, the contaminant will concomitantly move in response to the processes of advection and dispersion. Therefore, two or more zones of different concentration may be present within the plume: 1) a dense pool of contaminant at the bottom of the aquifer and 2) a dissolved fraction that moves with the ground water. Because the dense, pooled portion of the plume is also soluble, the contaminants will continue to dissolve and migrate in response to ground-water flow conditions. Ground-water monitoring wells installed in the aquifer may more easily detect the dissolved portion of the plume unless a specific monitoring program is devised for the dense phase of the plume. A knowledge of subsurface topography, determined from a top-of-bedrock map or overburden thickness maps and confirmed by surface geophysics and/or borings assist in accurately locating and monitoring the denser portion of the plume.

Figure 17 illustrates the migration of a low density, soluble contaminant. The contaminant initially accumulates at the top of the water table. Dissolution and dispersion of the contaminant occurs as the accumulated contaminant migrates with the ground water. Continued dissolution of the contaminant causes eventual dissipation of the plume. Monitoring for contaminants with these characteristics is frequently most effective in the shallow portion of the aquifer.

Contaminants with a density similar to water migrate in response to advection and dispersion. Contaminants in this category include inorganic constituents such as trace metals and nonmetals. Because of the similarity of contaminant movement to the ground-water movement, certain nonmetals, such as chloride, are commonly used as tracers to estimate the bound-

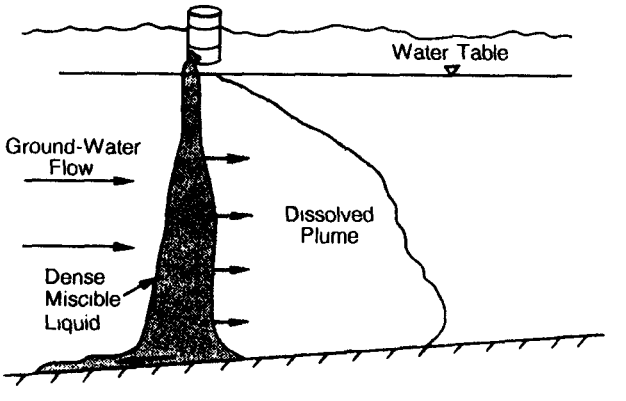

Figure 16. Migration of a high density, miscible contaminant in the subsurface.

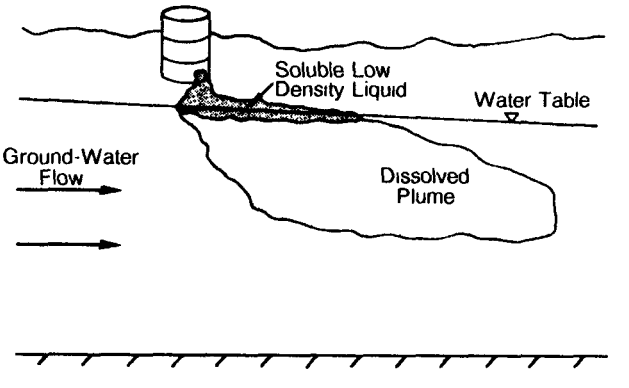

Figure 17. Migration of a low density, soluble contaminant in the subsurface.

aries of contaminant plumes. The dissolved portion of certain organic contaminant plumes can also have a density similar to water and migrate with the ground water. Monitoring and detection schemes for plumes of these contaminants must be based on the calculated effects of advection, dispersion, chemical attenuation and subsurface hydrogeology.

Relatively Immiscible/Insoluble Contaminants —

In both the saturated and unsaturated zones, immiscible compounds exist as either free liquids or as dissolved constituents depending on the relative solubility of the contaminant. The migration of dissolved constituents in the aqueous phase is primarily governed by the processes of advection-dispersion and biological/chemical attenuation (Schwarzenbach and Giger, 1985). The distribution of free liquids is complexly interrelated to capillary pressure, density (gravitational forces) and viscosity (shear forces) (Kovski, 1984; Villaume, 1985). The relative density of the contaminant affects the occurrence and movement of the contaminant in the subsurface and must be considered when locating monitoring wells and when determining the interval(s) to be screened in the aquifer.

Figure 18 illustrates the migration of a low density, immiscible contaminant. The contaminant moves downward through the vadose zone and accumulates at the top of the water table and/or within the capillary fringe. A residual amount of fluid is retained in the vadose zone in response to surficial and interstitial forces (Kovski, 1984; Yaniga and Warburton, 1984). The contaminant plume accumulates on the water table and typically elongates parallel to the direction of ground-water flow (Gillham et al., 1983). The movement and accumulation of immiscible hydrocarbons in the subsurface has been discussed by Blake and Hall (1984), Kovski (1984), Yaniga and Warburton (1984), and Hinchee and Reisinger (1985). Depending on the physical properties of the contaminant, a volatile gas phase may accumulate in the unsaturated zone.

Monitoring wells designed to detect or assess low density immiscible contaminants should be screened in the upper part of the aquifer. In many instances the screen should span the vadose zone and the upper portion of the aquifer to allow the floating contaminant to enter the well. Many immiscible contaminants depress the water table in the well and create an apparent free liquid thickness that is greater than the thickness of the floating contaminant within the aquifer. Where volatiles accumulate in the vadose zone, an explosion hazard may exist. Various mapping and detection techniques including soil-gas sampling and geophysical techniques can be utilized in planning the monitoring well locations to intercept the plume and reduce the risk of an explosion (Noel et al., 1983; Andres and Canace, 1984; Marrin and Thompson, 1984; Saunders and Germeroth, 1985; Lithland et al., 1985).

High density immiscible fluids are called dense non-aqueous phase liquids (DNAPLs). DNAPLs include most halogenated hydrocarbons and other aliphatic compounds because the density of most organic compounds is significantly greater than water. A density difference of one percent or greater has been shown to cause migration of contaminants in the subsurface (Mackay et al., 1985).

Figure 19 illustrates the movement of DNAPLs in the subsurface. Movement of DNAPLs in the unsaturated zone is primarily governed by capillary forces and density (Villaume, 1985). The contaminant sinks through the aquifer and pools at the bottom of the aquifer on top of the lower permeability boundary (Schwille, 1981). The pool of contaminant migrates in response to the topography of the lower permeability boundary independent of regional ground-water flow. Residual material is retained in the pore space of the unsaturated and saturated zones. This residual typically occurs as discrete fingers of globules. The formation and movement of the globules in the subsurface depends on the extant pore-size distribution and capillary forces (Schwille, 1981; Villaume, 1985). As much as five percent by volume of a compound may be retained in the aquifer after plume migration.

Both residual contaminant and the contaminant plume may continue to contribute dissolved constituents to the ground water for an extended period of time. Thus, small spills of persistent compounds have the ability to extensively contami-

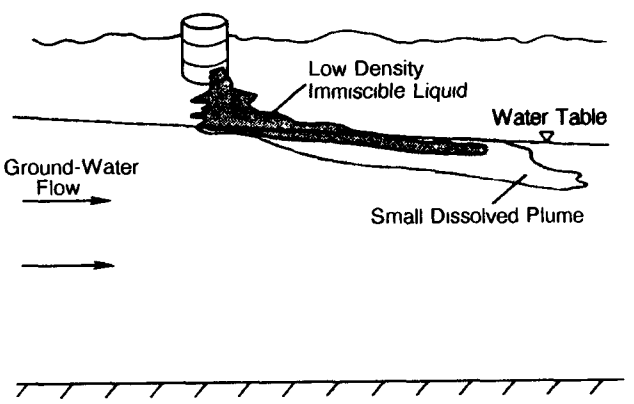

Figure 18. Migration of a low density, immiscible contaminant in the subsurface.

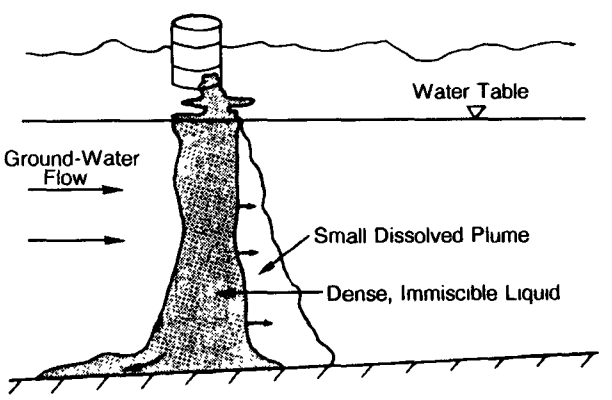

Figure 19. Migration of a dense, non-aqueous phase liquid (DNAPL) in the subsurface.

nate ground water. A vapor plume from the contaminant source may also form and migrate in the vadose zone. These plumes can often be detected through soil-gas sampling techniques.

Field investigations at hazardous waste sites have supported the phenomena of sinking DNAPLs as demonstrated by Schwille (1981) in physical model experiments (Guswa, 1984; Reinhard et al., 1984; Villaume, 1985). Monitoring for these DNAPLs poses special problems. The actual contaminant plume may migrate independently of regional ground-water flow and may be very difficult to locate. Analysis of maps of aquifer thickness and bedrock topography will aid in determining potential migration pathways. The dissolved constituents will migrate according to the ground-water flow regime. Vapor plumes can be detected by using soil-gas sampling techniques.

Villaume (1985) indicates that monitoring well installation through DNAPL-contaminated zones should proceed with caution to avoid cross contamination. Where the borehole is open during drilling or where the annulus is not properly sealed, DNAPLs may migrate down the hole or annulus and cause cross contamination.

Other Anthropogenic Influences

The hydrogeology of a site and the characteristics of the facility are primary factors that should be assessed when choosing specifications for a monitoring well program. However, a variety of factors that relate to the activities of man also should be assessed to determine any potential impacts to the monitoring program. These factors can affect ground-water gradients and flow direction and might have had past impacts on ground-water quality that will affect a current monitoring program.

To minimize the possibility of unknown anthropogenic influences, any initial investigation should include a detailed review of the site history. This review should encompass a study of any land use prior to the current or proposed activity at the site. Additionally, a design and operational history for any existing operation also should be compiled that includes the location of all site activities and the type(s) of waste accepted during the operation of the disposal facility. For example, information about tank age, volume of product delivered and sold, location of the tank and similar information is needed to assess a gasoline-dispensing cooperation. Another example is where a presently regulated disposal facility is located on the site of a previously unregulated landfill or a turn-of-the-century industrial facility. Prior waste disposal practices may already have caused ground-water contamination. Knowledge of the past site practices might lead the investigator to the conclusion that contaminants are held in the vadose zone and could be periodically released to the ground-water during recharge events (Pettyjohn, 1976 and 1982). Cyclic fluctuations in ground-water quality are sometimes difficult to evaluate because naturally-occurring constituents in the vadose zone can also cause similar fluctuations. Additional sources of data to assess site history include: 1) historical photographs, 2) air photos, 3) zoning plats, 4) interviews with local citizens and 5) local newspapers.

A complete site assessment must frequently include an investigation outside the legal boundary of the property, An evaluation of past and present land use practices in the area to be monitored can alert the investigator to potential contamination problems not related to the activity to be monitored. For example, non-point sources such as agricultural practices may affect natural background water quality. Adjacent industrial or commercial facilities may also influence background water quality or may serve as a source of contamination.

Pumping or injection wells near an area to be monitored can affect ground-water flow direction and velocity and/or can influence ground-water quality. The presence of a well or collection of wells with resultant cones of depression or impression might reverse anticipated ground-water flow directions or alter the rate of migration of contaminant plumes. The influence of a pumping well(s) should be determined before completing final design of the monitoring program. Collection of water-level measurements and evaluation of pump test data and velocity plots can be used to determine the possible hydraulic effects of the other wells in the monitoring program (Keely and Tsang, 1983). A more detailed discussion of monitoring strategies that are useful near well fields can be found in Keely (1986). Potential water-quality effects from injection wells near the site must also be evaluated.

Other activities that can alter ground-water velocity and/or direction include infiltration galleries and ground-water recharge facilities. Mounding of the water table beneath these areas will locally affect ground-water gradients. Where the quality of the recharge water differs from background water quality, the ground-water quality in the area may also be affected.

Storm sewers, surface runoff catchments, sanitary sewers, buried underground cables, underground pipelines or other subsurface disturbances may affect ground-water flow paths and ground-water quality. Preferential flow paths can be created when subsurface trenches or excavations are refilled with unconsolidated backfill and bedding materials. These more permeable materials provide conduits that can influence or control the flow of contaminants in the subsurface and can also serve as a vapor migration pathway. Storm and sanitary sewer lines and other buried pipelines may be a source of contamination if leakage occurs. The precise location of buried pipelines and cables should be determined to avoid inadvertently drilling into or through the lines. For example, drilling into natural gas pipelines poses an immediate health and safety risk to anyone near the drilling site. Drilling into pipelines for sanitary or storm sewers poses less of a safety risk, but may exacerbate the contamination problem. In summary, a review of all site activities and subsurface structures serves to contribute valuable information to the monitoring program.

Equipment that the Well Must Accommodate

The purpose of a monitoring well is to provide access to a specific zone from which water-level measurements and/or ground-water quality samples, representative of the extant water quality in the monitored zone, can be obtained. These conditions and the size of equipment necessary to obtain the desired measurements or collect the desired samples will determine the diameter of the well that must be drilled. For example, if the transmissivity of the monitored zone is to be

evaluated, then the well diameter must accommodate a pump or other device capable of providing the necessary water demand to make the transmissivity determination. Similarly, if representative ground-water quality samples are to be collected from the well, then an appropriate well diameter must be selected that accommodates the needed sampling equipment. Equipment and procedures that influence the choice of a well diameter include: 1) borehole geophysical tools and downhole cameras, 2) water-level measuring devices, 3) ground-water sampling devices and 4) aquifer testing procedures.

Borehole Geophysical Tools and Downhole Cameras

Use and Limitations of Borehole Geophysical Tools —

Borehole geophysical methods are often used in monitoring wells to obtain hydrogeologic information. Under appropriate conditions, porosity, hydraulic conductivity, pore fluid electrical conductivity and general stratigraphic logs can be obtained. Unfortunately, borehole geophysical methods are frequently limited by the materials and the drilling and completion methods used to construct the well. If it is anticipated that borehole geophysical methods will be conducted in a well, it is necessary to consider the limitations that are imposed by the various methods and materials that are used to construct the well.

Virtually all borehole methods that are likely to be used in shallow ground-water investigations can be conducted in a 2-inch diameter well. Four things that commonly restrict the use of borehole methods are well fluid, casing type, perforation type and gravel pack. Each one of these imposes limitations on the geophysical methods that can be conducted in the well. A summary of the limitations is presented in Table 3, and the limitations are discussed below.

Some geophysical methods require that a fluid be present in the well. Sonic tools will not operate in an air-filled borehole because the acoustic source and receivers are not coupled to the formation. Television systems can operate in air or fluid, but only if the fluid is not murky. Radiometric methods, such as natural gamma, gamma density or neutron moisture logs can operate in air or fluid-filled wells. However, the calibration of these tools is different between air and fluid-filled wells.

Standard resistivity tools that measure the electrical conductivity of the formation will not operate in air-filled boreholes because of the lack of an electrical connection between the electrodes and the formation. Some individuals have modified resistivity tools to operate in air-filled boreholes by altering the electrode design to insure that the electrode is always in contact with the formation. If the well fluid electrical conductivity is two orders of magnitude or more greater than the formation electrical conductivity (electrical conductivity is the reciprocal of electrical resistivity), then the lateral and normal electrical resistivity tools cannot be used because the well fluid distorts the electric field to such a degree that it cannot be corrected. This situation can occur in low porosity formations. The induction log, which measures formation electrical conductivity by electromagnetic coupling, does not require fluid in the well to operate and is usually not affected by the well fluid.

The casing material also influences which methods can be used. No measurement of the electrical properties of the formation can be made if the well is cased with metal. Quantitative resistivity measurements can only be made in open boreholes; limited qualitative measurements can be made in perforated PVC or perforated teflon wells. The formation electrical conductivity can be measured qualitatively with induction logs in wells cased with PVC or teflon. Sonic methods have not been demonstrated to be useful in cased wells, although this is an area that is currently being researched. The calibration of radiometric logs is affected by the thickness and material used in the casing. This is particularly true when neutron moisture methods are used in PVC casing because the method is unable to distinguish hydrogen in the PVC from hydrogen in the pore fluid.

The type of perforations influence which methods can be used. Qualitative resistivity measurements can be made in non-metallic wells that are uniformly perforated, but not in wells that

Table 3. Use and Limitations of Borehole Geophysical Tools (K. Taylor, Desert Research Institute, Reno, Nevada, Personal Communication, 1988)

	Fluid		Casing Material			Perforations		Radius of Investigations	
Borehole Method	Air	Water	Open	Metal	Plastic	Screen	No Screen	(cm)	Comments
Sonic	4	1	1	4	4	4	4	5-50	
Resistivity	4	1	1	4	3	3	4	5-400	
Induction	1	1	1	4	1	1	1	100-400	
Natural Gamma	2	2	2	2	2	1	1	5-30	
Gamma Density	2	2	2	2	2	1	1	5-15	
Neutron	2	2	2	2	2	1	1	5-15	Big effect with PVC
Caliper	1	1	1	1	1	1	1	0	
TV	1	2	1	1	1	1	1	0	Clear fluid only
Borehole Fluid	4	1	1	1	1	1	1	0	
Fluid Resistivity									
Vertical Flow	4	1	1	1	1	1	4	0	
Horizontal Flow	4	1	1	1	1	3	4	2-6cm	Strongly influenced by screen

[1] Works, this well property does not adversely affect the log
[2] Works, but calibration affected
[3] Works qualitatively
[4] Doesn't work

are not perforated because there is no path for the current between the electrodes and the formation. Vertical flow in the well is controlled by the location of perforated intervals. Hence, the location of perforations will dictate what intervals can be investigated. Horizontal flow through the well is controlled by the radial distribution of perforations. Attempts to measure the horizontal flow must have perforations that are continuous around the well.

In cased holes, the material in and the size of the annulus between the casing and the undisturbed formation will influence geophysical measurements. This occurs because all borehole geophysical measurements are a weighted average of the property being investigated over a cylinder portion of the formation adjacent to the borehole. The radius of this cylinder is referred to as the radius of investigation. The radius of investigation is a function of the geophysical method, tool design, and, to a lesser degree, the formation and annular material. Table 3 lists typical radii of investigation for common borehole geophysical methods. Because it is generally the formation, not the material in the disturbed zone, that is of interest, it is important to ensure that the radius of investigation is larger than the disturbed zone.

The radius of investigation for the sonic tool is on the order of a few wavelengths of the sonic pulse. Hence, it is less for high frequency tools (greater than 30 kHz) than for low frequency tools (less than 20 kHz). The radius of investigation of resistivity tools is controlled by the type of array that is used. Resistivity tools with multiple radii of investigation can commonly be used to correct for the effects of a disturbed annulus. The radiometric logs have a very limited radius of investigation and usually require a driven casing or open borehole to be accurate. The spacing between the source and the detector influences the radius of investigation. Some tools use two spacings to correct for disturbed zones less than approximately 4 inches in radius. Horizontal flow through the borehole is strongly affected by the hydraulic conductivity of the material in the disturbed zone. Hydraulic testing of discrete intervals with straddle packers is adversely affected if the annular material adjacent to the packers has a hydraulic conductivity significantly greater than the formation.

When using tools that have a radioactive source (gamma density or neutron moisture), state regulations vary. Most states severely restrict the use of these tools in water wells. At a minimum, it is usually required that the measurements be made in cased wells. This complicates the use of these tools because the casing influences the calibration and creates a disturbed zone. Another common restriction is that the well not be perforated in an aquifer with potable water. This further limits the use of these methods to areas that are already contaminated.

General Applications —

Natural gamma and self potential (SP) logs are commonly used to detect lithologic boundaries and to identify formations containing clays and shales (Keys, 1968; Keys and MacCary, 1971; Voytek, 1982; Mickam et al., 1984; Taylor et al., 1985). Both natural gamma and SP logging tools can be accommodated by 2-inch diameter or larger wells and are frequently available in combination with other logging tools as a portable unit that may be easily transported to sites with restricted access.

Formation porosity and density may be determined through the use of neutron, sonic and gamma-gamma logs (Keys, 1968; Keys and MacCary, 1971; Senger, 1985). The use of the neutron tool is generally accepted as an indicator of moisture content (Keys, 1968). Wilson (1980) and Everett et al. (1984) have pointed out limitations in using the neutron tool inside plastic casing, in the presence of certain contaminants and in certain geologic settings. Tool detector sizes are limited to 2-inch diameter wells or greater and are available as portable units for remote field access.

Various types of caliper logs are used to maintain a continuous record of well or borehole diameter that can be used to detect broken casings, the location of fractures, solution development, washed-out horizons and hydrated clays (Keys and MacCary, 1971; Mickam et al., 1984; DeLuca and Buckley, 1985). Diameters are "sensed" through the use of multiple feeler arms or bow springs. Calipers are available for borehole or well diameters ranging from 1.65 inches to 30 inches.

Other borehole logging tools may be used to derive information about the character of water in the borehole and the formation. Induction tools are used to measure pore fluid conductivity (Taylor et al., 1985). Selected resistivity tools with different formation penetration depths are used to detect variations in pore fluids (Keys, 1968; Keys and MacCary, 1971; Kwader, 1985; Lindsey, 1985). Temperature logs have recently been applied to the detection of anomalous fluid flow (Urban and Diment, 1985). Induction, resistivity and temperature logging tools have been designed to fit 2-inch diameter or larger monitoring wells.

Flowmeters are used to monitor fluid rates in cased or uncased holes. This tool provides direct ground-water flow measurement profiling. Flowmeters can also be used to detect thief zones, lost circulation zones and the location of holes in casing. Flowmeters measure flow using low inertia impellers or through changes in thermal conductance as liquids pass through the tool (Kerfoot, 1982). Many professionals remain unconvinced, however, as to the effectiveness of flowmeters. Impeller flowmeters are available as small as 1.65 inches in diameter; conductance flowmeters are typically 1.75 inches in diameter.

Some uncertainty exists in the application of almost all borehole equipment including geophysical logs. The correct interpretation of all such data often depends on precise knowledge of geologic and hydrogeologic conditions that are frequently not available. Therefore the interpretation of these data are invariably subjective.

Downhole television cameras can be used to gather in-situ information on boreholes and monitoring wells (Huber, 1982; Morahan and Doorier, 1984). Television logging may be used to check monitoring well integrity (i.e., casing and screen damage), to inspect installation and construction procedures and to accurately characterize subsurface fractures and geologic strata. Borehole television cameras have recently become available for wells as small as 2 inches in diameter. Cameras are available that provide multi-angle viewing, black/white or color images and recorded depth data during imaging.

Many of the logging tools discussed in this section are available as either combination probes or single probes. These

tools have been designed so that they can be run from truck mounted winches and loggers or from portable units that can be transported by backpack to sites where vehicular access is restricted. In addition, a variety of portable data loggers are available to record logging data gathered onsite.

Water-Level Measuring Devices

The basic water-level measuring device is a steel tape typically coated with ordinary carpenter's chalk. This is the simplest water-level measuring device and is considered by many to be the most accurate device at moderate depths. In addition to a standard steel tape, the five main types of water-level measuring devices are: 1) float-type, 2) pressure transducers, 3) acoustic probes, 4) electric sensors and 5) air lines. Float-type devices rest on the water surface and may provide a continuous record of water levels on drum pen recorders or data loggers. Float sizes range from 1.6 inches to 6.0 inches in diameter, but are only recommended for wells greater than 4 inches in diameter due to loss of sensitivity in smaller diameter boreholes. Pressure transducers are suspended in the well on a cable and measure height of water above the transducer center. Transducers are available in diameters as small as 0.75 inches. Acoustic well probes use the reflective properties of sound waves to calculate the distance from the probe at the wellhead to the water surface. Acoustic probes are designed for well diameters as small as 4 inches and are limited to water depths greater than 25 feet (Ritchey, 1986). Electric sensors are suspended on the end of a marked cable. When the sensor encounters conductive fluid, the circuit is completed and an audible or visual signal is displayed at the surface. Air lines are installed at a known depth beneath the water; and by measuring the pressure of air necessary to discharge water from the tube, the height of the water column above the discharge point can be determined.

Steel tapes coated with a substance that changes color when wetted are also used as water-level measuring devices (Garber and Koopman, 1968). Tapes are available as small as 0.75 inches in width. Specially coated tape with physical and chemical resistance has recently been developed that is 0.375 inches in width and contains electrical conductance probes at the end of the tape to sense water levels (Sanders, 1984).

Ground-Water Sampling Devices

A wide variety of ground-water sampling devices are available to meet the requirements of a ground-water monitoring program. A discussion of the advantages and disadvantages of sampling devices is provided by Barcelona et al. (1983) and (1985a), Nielsen and Yeates (1985) and Bryden et al. (1986).

Bailers are the simplest of the sampling devices commonly used for ground-water sampling. They can be constructed from a variety of materials including polytetrafluorethylene (PTFE), polyvinyl chloride (PVC) and stainless steel. Diameters of 0.5 inches or larger are common. Because bailers are lowered by hand or winch, the maximum sampling depth is limited by the strength of the winch and the time required for bailing.

Grab samplers such as Kemmerer samplers can be used to collect samples from discrete sampling depths. These samplers can be constructed from a variety of materials and can be manufactured to fit in wells with 0.5-inch diameter or larger.

Syringe samplers allow for depth discrete sampling at unlimited depths while reducing effects on sample integrity (Nielsen and Yeates, 1985). Syringe samplers have been constructed from stainless steel, PTFE and polyethylene/glass with various modifications (Gillham, 1982). These samplers may be utilized in wells with a casing diameter 1.5 inches or larger.

Suction lift or vacuum pumps include both centrifugal and peristaltic pumps. These types of pumps are limited to sampling depths of less than 25 feet. However, they can be utilized in wells of 0.5-inch diameter or larger.

Gas drive samplers can be used in wells with a casing diameter of 0.75 inches or larger. These samplers operate on the principal of applied gas pressure to open/close check valves and deliver samples to the surface (Robin et al., 1982; Norman, 1986). Sampling depth is limited by the internal working strength of the tubing used in sampler construction.

Positive displacement bladder pumps can be constructed of various inert materials for wells with a diameter of 1.5 inches or larger. The use of pressurized bladders ensures that the sample does not contact the driving gas. Most bladder pumps are capable of lifting samples from 300 to 400 feet, although models capable of 1000 feet of lift have been recently advertised.

Both gear-drive and helical rotor submersible pumps have been developed for wells with a casing diameter of at least 2 inches. These pumps are capable of lifts of up to at least 150 feet. Submersible gas-driven piston pumps have been developed that operate on compressed air or bottled gas without contact of the sample with the air. These pumps are available for 1.5 and 2-inch diameter monitoring wells and have pumping lifts from 0 to 1000 feet. All of these types of pumps can be constructed from various inert materials and may provide continuous, but variable flow rates to minimize degassing of the sample.

Aquifer Testing Procedures

The diameter, location, depth, and screened interval of a monitoring well should be chosen based on the need for and the type of aquifer testing procedures that will be performed on the well. Observation wells generally do not have to be designed with the same diameter criteria in mind. The type of aquifer testing procedure should be based on the hydraulic characteristics of the aquifer such as transmissivity, storage coefficient, homogeneity and areal extent.

Pumping tests are typically performed in wells with a high transmissivity and in wells with a diameter large enough to accommodate the pumping equipment. Conversely, slug injection or recovery tests, that add or remove smaller amounts of water, are typically performed in formations with low transmissivity and in smaller diameter wells. Packer tests can be conducted in wells as small as 2 inches in diameter, but the optimum well diameter for packer testing is 4 inches. Bailer tests to evaluate aquifer characteristics can be performed in wells of all diameters. Tracer tests are also used to evaluate aquifer characteristics and can be performed regardless of well diameter.

References

Anderson, M.P., 1984. Movement of contaminants in ground water: ground water transport-advection and dispersion; Ground-Water Contamination, Studies in Geophysics; National Academy Press, Washington, D.C., 179 pp.

Andres, K.G. and R. Canace, 1984. Use of the electrical resistivity technique to delineate a hydrocarbon spill in the coastal plain deposits of New Jersey; Proceedings of the NWWA/API Conference on Petroleum Hydrocarbons and Organic Chemicals in Ground Water: Prevention, Detection and Restoration; National Water Well Association, Dublin, Ohio, pp. 188-197.

Barcelona, M.J., J.P. Gibb, J.A. Helfrich and E.E. Garske, 1985a. Practical guide for ground-water sampling; Illinois State Water Survey, SWS Contract Report 374, Champaign, Illinois, 93 pp.

Barcelona, M.J., J.P. Gibb and R. Miller, 1983. A guide to the selection of materials for monitoring well construction and ground-water sampling; Illinois State Water Survey, SWS Contract Report 327, Champaign, Illinois, 78 pp.

Bear, J., 1972. Dynamics of fluids in porous media; Elsevier, New York, 764 pp.

Beck, B.F., 1983. A common pitfall in the design of RCRA ground-water monitoring programs; Ground Water, vol. 21, no. 4, pp. 488-489.

Blake, S.B. and R.A. Hall, 1984. Monitoring petroleum spills with wells: some problems and solutions; Proceedings of the Fourth National Symposium on Aquifer Restoration and Ground-Water Monitoring; National Water Well Association, Dublin, Ohio, pp. 305-310.

Bryden, G.W., W.R. Mabey and K.M. Robine, 1986. Sampling for toxic contaminants in ground water; Ground-Water Monitoring Review, vol. 6, no. 2, pp. 67-72.

Cherry, J.A., R.W. Gillham and J.F. Barker, 1984. Contaminants in ground water: chemical processes; Ground-Water Contamination, Studies in Geophysics; National Academy Press, Washington, D.C., 179 pp.

Deluca, R.J. and B.K. Buckley, 1985. Borehole logging to delineate fractures in a contaminated bedrock aquifer; Proceedings of the NWWA Conference on Surface and Borehole Geophysical Methods in Ground-Water Investigations; National Water Well Association, Dublin, Ohio, pp. 387-397.

Everett, L.G., L.G. Wilson and E.W. Hoylman, 1984. Vadose zone monitoring for hazardous waste sites; Noyes Data Corporation, Park Ridge, New Jersey, 360 pp.

Freeze, R. A. and J.A. Cherry, 1979. Ground Water; Prentice-Hall, Inc., Englewood Cliffs, New Jersey, 604 pp.

Garber, M.S. and F.C. Koopman, 1968. Methods of measuring water levels in deep wells; Techniques of Water-Resources Investigations of the United States Geological Survey, Book 8, Instrumentation; United States Government Printing Office, Washington, D.C., 23 pp.

Gillham, R.W., 1982. Syringe devices for ground-water sampling; Ground-Water Monitoring Review, vol. 2, no. 2, pp. 36-39.

Gillham, R.W., M.J.L. Robin, J.F. Barker and J.A. Cherry, 1983. Ground-water monitoring and sample bias; API Publication 4367, Environmental Affairs Department, American Petroleum Institute, Washington, D.C., 206 pp.

Guswa, J.H., 1984. Application of multi-phase flow theory at a chemical waste landfill, Niagara Falls, New York; Proceedings of the Second International Conference on Ground-Water Quality Research; Oklahoma State University Printing Services, Stillwater, Oklahoma, pp. 108-111.

Heath, R.C., 1984. Ground-water regions of the United States; United States Geological Survey Water Supply Paper 2242; Superintendent of Documents, United States Government Printing Office, Washington, D.C., 78 pp.

Hinchee, R.E. and H.J. Reisinger, 1985. Multi-phase transport of petroleum hydrocarbons in the subsurface environment: theory and practical application; Proceedings of the NWWA/API Conference on Petroleum Hydrocarbons and Organic Chemicals in Ground Water: Prevention, Detection and Restoration; National Water Well Association, Dublin, Ohio, pp. 58-76.

Huber, W.F., 1982. The use of downhole television in monitoring applications; Proceedings of the Second National Symposium on Aquifer Restoration and Ground-Water Monitoring; National Water Well Association, Dublin, Ohio, pp. 285-286.

Keely, J.F., 1986. Ground-water contamination assessments; Ph.D. dissertation, Oklahoma State University, Stillwater, Oklahoma, 408 pp.

Keely, J.F. and C.F. Tsang, 1983. Velocity plots and capture zones of pumping centers for ground-water investigations; Ground Water, vol. 21, no. 6, pp. 701-714.

Kerfoot, W.B., 1982. Comparison of 2-D and 3-D ground-water flowmeter probes in fully penetrating monitoring wells; Proceedings of the Second National Symposium on Aquifer Restoration and Ground-Water Monitoring; National Water Well Association, Dublin, Ohio, pp. 264-268.

Keys, W.S., 1968. Well logging in ground-water hydrology; Ground Water, vol. 6, no. 1, pp. 10-18.

Keys, W.S. and L.M. MacCary, 1971. Application of borehole geophysics to water-resources investigations, Book 2; United States Department of the Interior, Washington, D.C., 126 pp.

Kovski, J.R., 1984. Physical transport process for hydrocarbons in the subsurface; Proceedings of the Second International Conference on Ground Water Quality Research; Oklahoma State University Printing Services, Stillwater, Oklahoma, pp. 127-128.

Kwader, T., 1985. Resistivity-porosity cross plots for determining in situ formation water-quality case examples; Proceedings of the NWWA Conference on Surface and Borehole Geophysical Methods in Ground-Water Investigations; National Water Well Association, Dublin, Ohio, pp. 415-424.

Lindsey, G.P., 1985. Dry hole resistivity logging; Proceedings of the NWWA Conference on Surface and Borehole Geophysical Methods in Ground-Water Investigations; National Water Well Association, Dublin, Ohio, pp. 371-376.

Lithland, S.T., T.W. Hoskins and R.L. Boggess, 1985. A new ground-water survey tool: the combined cone penetrometer/vadose zone vapor probe; Proceedings of the NWWA/API Conference on Petroleum Hydrocarbons and Organic Chemicals in Ground Water: Prevention, Detection and Restoration; National Water Well Association, Dublin, Ohio, pp. 322-330.

Mabey, W.R. and T. Mill, 1984. Chemical transformation in ground water; Proceedings of the Second International Conference on Ground-Water Quality Research; Oklahoma State University Printing Services, Stillwater, Oklahoma, pp. 61-64.

Mackay, D.M., P.V. Roberts and J.A. Cherry, 1985. Transport of organic contaminants in ground water; Environmental Science & Technology, vol. 19, no. 5, pp. 384-392.

Marrin, D.L. and G.M. Thompson, 1984. Remote detection of volatile organic contaminants in ground water via shallow soil gas sampling; Proceedings of the NWWA/API Conference on Petroleum Hydrocarbons and Organic Chemicals in Ground Water: Prevention, Detection and Restoration; National Water Well Association, Dublin, Ohio, pp. 172-187.

McCarty, P.L., M. Reinhard and B.E. Rittmann, 1981. Trace organics in ground water; Environmental Science & Technology, vol. 15, no. 1, pp. 40-51.

McCarty, P.L., B.E. Rittman and E.J. Bouwer, 1984. Microbiological processes affecting chemical transformation in ground water; Ground-Water Pollution Microbiology, G. Bitton and C.D. Gerba, editors, Wiley and Sons, New York, pp. 90-115.

Mickam, J.T., B.S. Levy and G.W. Lee, 1984. Surface and borehole geophysical methods in ground water investigations; Ground-Water Monitoring Review, vol. 4, no. 4, pp. 167-171.

Morahan, T. and R.C. Doorier, 1984. The application of television borehole logging to ground-water monitoring programs; Ground-Water Monitoring Review, vol. 4, no. 4, pp. 172-175.

Nielsen, D.M. and G.L. Yeates, 1985. A comparison of sampling mechanisms available for small-diameter ground-water monitoring wells; Proceedings of the Fifth National Symposium and Exposition on Aquifer Restoration and Ground-Water Monitoring; National Water Well Association, Dublin, Ohio, pp. 237-270.

Noel, M.R., R.C. Benson and P.M. Beam, 1983. Advances in mapping organic contamination: alternative solutions to a complex problem; National Conference on Managing Uncontrolled Hazardous Waste Sites, Washington, D.C.; Hazardous Materials Control Research Institute, Silver Spring, Maryland, pp. 71-75.

Norman, W.R., 1986. An effective and inexpensive gas-drive ground-water sampling device; Ground-Water Monitoring Review, vol. 6, no. 2, pp. 56-60.

Office of Technology Assessment, 1984. Protecting the nation's ground water from contamination, vols. I and II; United States Congress, Washington, D.C., 503 pp.

Pettyjohn, W.A., 1976. Monitoring cyclic fluctuations in ground-water quality; Ground Water, vol. 14, no. 6. pp. 472-479.

Pettyjohn, W.A., 1982. Cause and effect of cyclic changes in ground-water quality; Ground-Water Monitoring Review, vol. 2, no. 1, pp. 43-49.

Reinhard, M., J.W. Graydon, N.L. Goodman and J.F. Barker, 1984. The distribution of selected trace organics in the leachate plume of a municipal landfill; Proceedings of the Second International Conference on Ground-Water Quality Research; Oklahoma State University Printing Services, Stillwater, Oklahoma, pp. 69-71.

Ritchey, J.D., 1986. Electronic sensing device used for in situ ground-water monitoring; Ground-Water Monitoring Review, vol. 16, no. 2, pp. 108-113.

Robin, M.J., D.J. Dytynshyn and S.J. Sweeny, 1982. Two gas-drive sampling devices; Ground-Water Monitoring Review, vol. 2, no. 1, pp. 63-65.

Sanders, P.J., 1984. New tape for ground-water measurements; Ground-Water Monitoring Review, vol. 4, no. 1, pp. 39-42.

Saunders, W.R. and R.M. Germeroth, 1985. Electromagnetic measurements for subsurface hydrocarbon investigations; Proceedings of the NWWA/API Conference on Petroleum Hydrocarbons and Organic Chemicals in Ground Water: Prevention, Detection and Restoration; National Water Well Association, Dublin, Ohio, pp. 310-321.

Schwarzenbach, R.P. and W. Giger, 1985. Behavior and fate of halogenated hydrocarbons in ground water; Ground-Water Quality, C.H. Ward, W. Giger and P.L. McCarty, editors; Wiley and Sons, New York, pp. 446-471.

Schwille, F., 1981. Ground-water pollution in porous media by fluids immiscible with water; Quality of Ground Water, Proceedings of an International Symposium, Noordwijkeshout, The Netherlands; Studies in Environmental Science, vol. 17, Elsevier Scientific Company, Amsterdam, The Netherlands, 1128 pp.

Senger, J.A., 1985. Defining glacial stratigraphy with the neutron log; Proceedings of the NWWA Conference on Surface and Borehole Geophysical Methods in Ground-Water Investigations; National Water Well Association, Dublin, Ohio, pp. 355-368.

Taylor, K.C., S.G. Wheatcraft and L.G. McMillion, 1985. A strategy for hydrologic interpretation of well logs; Proceedings of the NWWA Conference on Surface and Borehole Geophysical Methods in Ground-Water Investigations; National Water Well Association, Dublin, Ohio, pp. 314-323.

Urban, T.C. and W.H. Diment, 1985. Convection in boreholes: limits on interpretation of temperature logs and methods for determining anomalous fluid flow; Proceedings of the NWWA Conference on Surface and Borehole Geophysical Methods in Ground-Water Investigations; National Water Well Association, Dublin, Ohio, pp. 399-414.

Villaume, J.F., 1985. Investigations at sites contaminated with dense, non-aqueous phase liquids (DNAPLs); Ground-Water Monitoring Review, vol. 5, no. 2, pp. 60-74.

Voytek, J. Jr., 1982. Application of downhole geophysical methods in ground-water monitoring; Proceedings of the Second National Symposium on Aquifer Restoration and Ground-Water Monitoring; National Water Well Association, Dublin, Ohio, pp. 276-278.

Wilson, J.T., M.J. Noonan and J.F. McNabb, 1985. Biodegradation of contaminants in the subsurface; Ground-Water Quality, C.H. Ward, W. Giger and P.L. McCarty, editors; John Wiley and Sons, New York, 547 pp.

Wilson, L.G., 1980. Monitoring in the vadose zone: a review of technical elements and methods; U.S. Environmental Protection Agency Publication No. 600/7-80-134, 168 pp.

Yaniga, P.M. and J.G. Warburton,, 1984. Discrimination between real and apparent accumulation of immiscible hydrocarbons on the water table: a theoretical and empirical analysis; Proceedings of the Fourth National Symposium on Aquifer Restoration and Ground-Water Monitoring; National Water Well Association, Dublin, Ohio, pp. 311-315.

Section 3
Monitoring Well Planning Considerations

Recordkeeping

The development of an accurate recordkeeping process to document the construction, installation, sampling and maintenance phases of a monitoring well network plays an integral part in determining the overall success of the program. An accurate account of all phases is necessary to ensure that the goals of the monitoring program (i.e. accurate characterization of the subsurface hydrogeology and representative water-quality samples, etc.) are met. It is from these records that information will be used to resolve any future monitoring problems that will be encountered.

Recordkeeping begins with the drilling of the monitoring well. Complete documentation of the drilling and/or sampling process should be accurately recorded in a field notebook and transferred to a boring log. Notations about weather, drilling equipment, personnel on the site, sampling techniques, subsurface geology and hydrogeology should be recorded. Lithologic descriptions should be based on visual examination of the cuttings and samples and confirmed with laboratory analyses where appropriate. The Unified Soil Classification System is one universally accepted method of soil description. In the Unified Soil Classification System, soils are designated by particle size and moisture content. A description of the system can be found in a publication by the United States Department of Interior (1974). Identification and classification of rock should include typical rock name, notations on pertinent lithology, structural features and physical alterations. Although there is no universally accepted system for describing rock, one system is described by Williamson (1984). A list of information that should be recorded in the field notebook is contained in Table 4. Information in the field notebook is transferred to the boring log for clarity of presentation. Figure 20 illustrates the format for a sample boring log. Both the boring log and the field notes become part of the permanent file for the well.

In addition to the boring log, an "as-built" construction diagram should be drawn for each well. This differs from a "typical monitoring well" diagram contained within the design specifications because the "as-built" diagram contains specific construction information about the materials and depths of the well components. An "as-built" diagram eliminates confusion if the monitoring well was not built exactly as conceived in the design specifications. In addition, the drawing provides an "at-a-glance" picture of how the well is constructed (similar to the function of a boring log). The "as-built" diagram should contain information about the elevation, depth and materials used in well construction. Figure 21 illustrates the format for an "as-built" diagram of a monitoring well.

Finally, records should be kept for *each* well illustrating not only the construction details for the well, but also a complete history of actions related to the well. These include: 1) dates and notations of physical observations about the well, 2) notations about suspected problems with the well, 3) water-level measurements, 4) dates of sample collection (including type of sampler, notations about sample collection and results of laboratory analyses), 5) dates and procedures of well maintenance and 6) date, method and materials used for abandonment. This record becomes part of a permanent file that is maintained for each well.

Decontamination

Decontamination of drilling and formation-sampling equipment is a quality-control measure that is often required during drilling and installation of ground-water monitoring wells. Decontamination is the process of neutralizing, washing and rinsing equipment that comes in contact with formation material or ground water that is known or is suspected of being contaminated. Contaminated material that adheres to the surface of drilling and formation sampling equipment may be transferred via the equipment: 1) from one borehole to another and/or 2) vertically within an individual borehole from a contaminated to an uncontaminated zone. The purpose for cleaning equipment is to prevent this "cross-contamination" between boreholes or between vertical zones within a borehole. Although decontamination is typically used where contamination exists, decontamination measures are also employed in uncontaminated areas as a quality control measure.

Planning a decontamination program for drilling and formation sampling equipment requires consideration of:

1) the location where the decontamination procedures will be conducted, if different from the actual drilling site;
2) the types of equipment that will require decontamination;
3) the frequency that specific equipment will require decontamination;
4) the cleaning technique and type of cleaning solutions and/or wash water needed for decontamination;
5) the method for containing the residual contaminants and cleaning solutions and/or wash water from the decontamination process, where necessary; and
6) the use of a quality control measure, such as equipment blanks or wipe testing, to determine

Table 4. Descriptive Information to be Recorded for each Monitoring Well

General Information	Well Completion Information
Boring number	Elevation of top of casing (± .01 foot)
Date/time to start and finish well	Casing:
Location of well (include sketch of location)	a) material
Elevation of ground surface	b) diameter
Weather conditions during drilling	c) total length of casing
Name of driller, geologist and other personnel on site	d) depth below ground surtace
	e) how sections joined
Drilling Information	f) end cap (yes or no)
Type of drilling equipment	Screen:
Type and design of drill bit	a) material
Any drilling fluid used	b) diameter
Diameter of drill bit	c) slot size and length
Diameter of hole	d) depth to top and bottom of screen
Penetration rate during drilling (fee/minute, minutes/foot, feet/hour, etc.)	Filter pack:
Depth to water encountered during drilling	a) type/size
Depth to standing water	b) volume emplaced (calculated and actual)
Soil/rock classification and description	c) depth to top of filter pack
Total well depth	d) source and roundness
Remarks on miscellaneous drilling conditions, including:	e) method of emplacement
a) loss or gain of fluid	Grout and/or sealant:
b) occurrence of boulders	a) composition
c) cavities or voids	b) method of emplacement
d) borehole conditions	c) volume emplaced (where applicable) (calculated and actual)
e) changes in color of formation samples or fluid	d) depth of grouted interval (top and bottom)
f) odors while drilling	Backfill material:
	a) depth of backfilled interval (top and bottom)
Sampling Information	b) type of material
Types of sampler(s) used	Surtace seal detail:
Diameter and length of sampler(s)	a) type of seal
Number of each sample	b) depth of seal (must be below frost depth)
Start and finish depth of each sample	Well protector:
Split spoon sampling:	a) type
a) size and weight of drive hammer	b) locking device
b) number of blows required for penetration of 6 inches	c) vents (yes or no)
c) free fall distance used to drive sampler	Well development:
Thin-walled sampling:	a) method
a) relative ease or difficulty of pushing sample OR	b) date/time; start/stop
b) pounds per square inch (pai) necessary to push sample	c) volume and source water (if used)
Rock cores:	
a) core barrel drill bit design	
b) penetration rate (fee/minute, minutes/foot, fee/hour, etc.)	
Percent of sample recovered	

the effectiveness of the decontamination procedure, if appropriate.

The degree to which each of these items are considered when developing a decontamination program varies with the level of contamination anticipated at the site. Where the site is "clean," decontamination efforts may simply consist of rinsing drilling and formation sampling equipment with water between samples and/or boreholes. As the level of anticipated or actual contamination increases, so should the decontamination effort. A document by the United States Environmental Protection Agency (1987) discusses decontamination at CERCLA sites .

One important factor when designing a decontamination program is the type of contaminant(s). The greater the toxicity or the more life-threatening the contaminant, the more extensive and thorough the decontamination program must be. The following discussion focuses on measures to be employed at sites where contamination is known or suspected or decontamination is desired as a quality control measure. Less formally defined decontamination efforts may be employed at any site.

Decontamination Area

An appropriate decontamination area at a site is selected based on the ability to: 1) control access to the decontamination area, 2) control or contain residual material removed from the surfaces of the drilling and formation sampling equipment and 3) store clean equipment to prevent recontamination before use. In addition, the decontamination area should be located in close proximity to the drilling area to minimize further site contamination. The importance of these considerations during the selection process for a decontamination area will be influenced by the type of contaminants involved and the extent of contamination at the site. For example, the decontamination area for drilling and formation sampling equipment may be located near the drilling rig when: 1) the ground surface is regarded as noncontaminated, 2) the known or suspected subsurface contaminants are non-hazardous and 3) the drilling method permits good control over the containment of cuttings from the borehole. However, the decontamination area should be located an adequate distance away from the rig to avoid contamination of clean equipment by airborne lubricating oil or hydraulic fluids from the drilling rig. Once drilling and sampling equipment is cleaned, the equipment should not be placed directly on the ground surface even though the area is generally regarded as noncontaminated. Clean equipment should be placed, at a minimum, on top of plastic ground sheeting, and the sheeting

BORING NO. 2A

SH 1 OF 1

BORING LOG

PROJECT AML Manufacturing DATE START Aug. 30, 1987 FINISH Aug. 31, 1987

LOCATION Sussex County GROUND ELEV. 337.09' TOTAL DEPTH (FT) 23.50'

CASING I.D. 4 25" CORE SIZE NX TYPE Air Rotary w/Casing Hammer

CONTRACTOR Sprowls & Sons LOGGED BY S. Smith

SCALE IN FEET	LITHOLOGIC SYMBOL	SAMPLE TYPE AND NO.	SAMPLE BLOWS OR REC	SAMPLE DEPTH RANGE (FT.)	RQD %	RATE OF PEN MIN/FT.	SOIL AND ROCK DESCRIPTION/COMMENTS (Unified soil class system Rock description, Depth to water table, Loss of drill fluid, etc.)
						0.5	
5'		SS-1	45-29 -36	5.0' 6.5'	70		Gravelly SILT, little sand, trace clay About 30% pebbles and granules. Moderately moist. Moderate yellowish brown (10 YR5/4, mottled 5Y5/2); drab Till. [GM]
						0.7	
10'		SS-2	43-45 -56	10.0'- 11.5'	85		Gravelley SILT, little sand, trace clay About 30% pebbles and granules. Dry to slightly moist Moderate yellowish brown (10 YR5/4), drab Till [GM]
						Core Breaks	
15'		NX-1			5.25'		Medium dark gray to dark gray SILTSTONE, sandy SILTSTONE, with minor shale seams Fresh and hard except at breaks along slightly to moderately weathered shale seams. Jointed and broken approximately as depicted. Coquina seam (15 1'-15 2'), very calcareous Generally only calcareous in sandy SILTSTONE layers. Wet @17.5'
20'		NX-2			5.0' 100		Medium dark gray to dark gray SILTSTONE, sandy SILTSTONE, and minor shale seams, same as above
							End of Boring - Total Depth = 23 50'
25'							Piezometer 2A installed with screened interval of 18.0' to 23 0'

Overburden 13.0'	Water Level	16.2'	16.35'
Rock 10.5'	Date	8/30/87	8/30/87
	Time	1:00 p.m.	3:00 p.m.
Total Depth 23.50'	Elevation Measuring Point	Top of Casing	Top of Casing

Comments Surface casing driven 8" into rock

Figure 20. Sample boring log format (after Electric Power Research Institute, 1985).

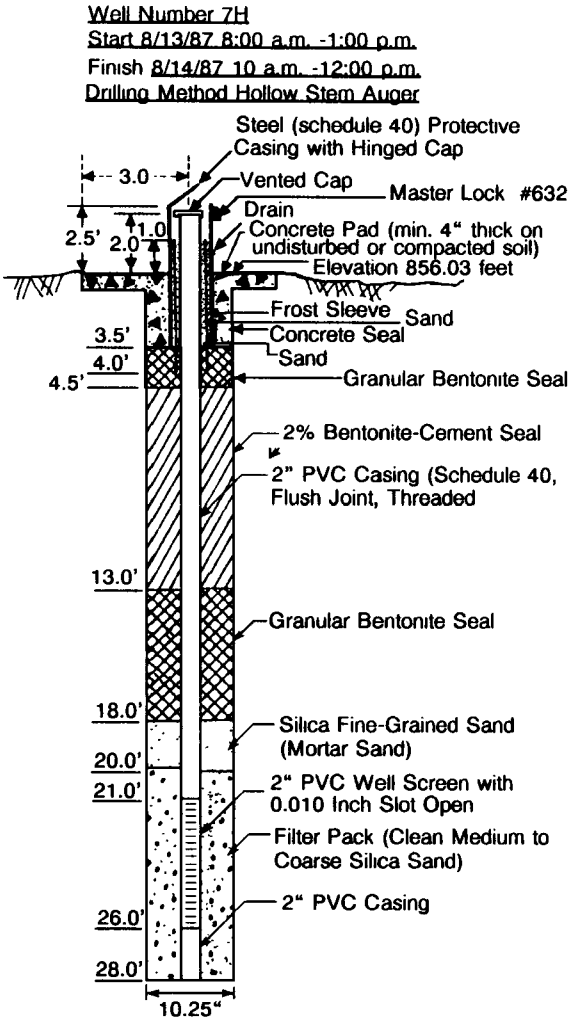

Figure 21. Format for an "as-built" monitoring well diagram.

should be discarded after each borehole is drilled. Clean equipment may also be stored off the ground on storage or equipment racks until used for drilling or formation sampling. Heavy equipment, such as the drilling rig, water truck or any other support vehicle, should be cleaned in the decontamination area prior to demobilizing from the site.

The presence of hazardous materials at a drilling site dictates that a more controlled access area be established for equipment decontamination to prevent cross-contamination and to provide worker safety. Figure 22 shows a general layout of a contaminant reduction zone where systematic decontamination procedures are employed as personnel and equipment move from the hazardous material exclusion zone to a clean, non-hazardous support zone.

Types of Equipment

Decontamination of drilling and formation sampling equipment involves cleaning tools used in the borehole. This equipment includes drill bits, auger sections, drill-string tools, drill rods, split-barrel or thin-wall tube samplers, bailers, tremie pipes, clamps, hand tools and steel cable. Equipment with a porous surface, such as natural rope, cloth hoses and wooden blocks or handles, cannot be thoroughly decontaminated and should be disposed of properly after completion of the borehole. The specific drilling and formation sampling equipment that needs to be cleaned should be listed in the equipment decontamination program.

A decontamination program for equipment should also include cleaning heavy equipment, including the drill rig and support trucks. Advanced planning is necessary to ensure that the decontamination area is adequately sized to accommodate large vehicles, and that any contaminants removed from the vehicles are properly controlled and contained within the decontamination area. This should include the "tracking zone" created by vehicles as they move into and out of the area.

Frequency of Equipment Decontamination

A decontamination program for equipment should detail the frequency that drilling and formation sampling equipment is to be cleaned. For example, drilling equipment should be decontaminated between boreholes. This frequency of cleaning is designed to prevent cross-contamination from one borehole to the next. However, drilling equipment may require more frequent cleaning to prevent cross-contamination between vertical zones within a single borehole. Where drilling equipment is used to drill through a shallow contaminated zone and to install surface casing to seal-off the contaminated zone, the drilling tools should be decontaminated prior to drilling deeper. Where possible, field work should be initiated by drilling in that portion of the site where the least contamination is suspected.

Formation sampling equipment should be decontaminated between each sampling event. If a sampling device is not adequately cleaned between successive sampling depths, or between boreholes, contaminants may be introduced into the successive sample(s) via the formation sampling device.

Cleaning Solutions and/or Wash Water

Decontamination of equipment can be accomplished using a variety of techniques and fluids. The most common and generally preferred methods of equipment decontamination involve either a clean potable water wash, steam cleaning or water/wash steam cleaning combination. Water washing may be accomplished using either low or high pressure. If a low pressure wash is used, it may be necessary to dislodge residual material from the equipment with a brush to ensure complete decontamination. Steam cleaning is accomplished using portable, high-pressure steam cleaners equipped with pressure hose and fittings.

Sometimes solutions other than water or steam are used for equipment decontamination. Table 5 lists some of the chemicals and solution strengths that have been used in equipment decontamination programs. One commonly used cleaning solution is a non-phosphate detergent. Detergents are preferred over other cleaning solutions because the detergent alone does not pose a handling or disposal problem. In general, when a cleaning solution for equipment decontamination is necessary, a non-phosphate detergent should be used unless it is demonstrated that the environmental contaminant in question cannot be removed from the surface of the equipment by detergents.

Acids or solvents should be used as cleaning solutions only under exceptional circumstances because these cleaners are, in

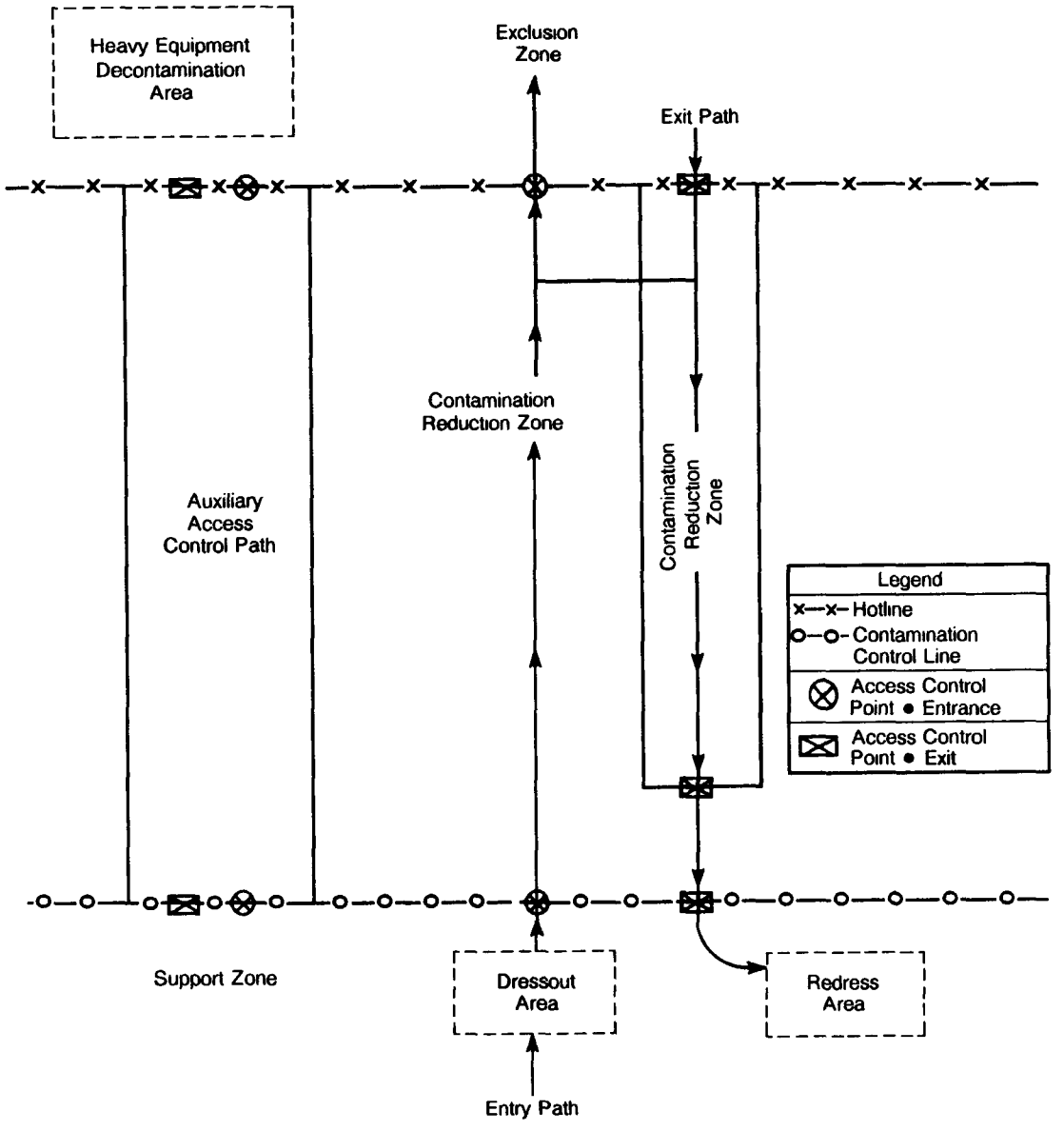

Figure 22. Typical layout showing decontamination areas at a hazardous materials site (United States Environmental Protection Agency, 1984).

and of themselves, hazardous materials and may serve as contaminants if introduced into the borehole. When using chemical solutions for equipment decontamination, water or steam should always be used as a final rinse to remove any residual chemical cleaner from the surface of the equipment and thereby prevent contamination of the borehole by the cleaning solution.

According to Moberly (1985), a typical sequence for decontamination of low to moderately contaminated equipment might include:

1) water or steam rinse to remove particulates;
2) steam wash with water or non-phosphate detergent; and
3) steam or water rinse with potable water.

Additional wash/rinse sequences may be necessary to completely remove the contaminants.

Containment of Residual Contaminants and Cleaning Solutions and/or Wash Water

Contaminated material removed from the surfaces of equipment and cleaning solutions and/or wash water used during decontamination usually require containment and proper disposal. If non-hazardous contaminants are involved, the decontamination program for equipment may not require provisions for the disposal of wash water and residual material removed from the equipment. Conversely, a decontamination program for equipment exposed to hazardous materials requires provision for catchment and disposal of the contaminated material, cleaning solution and/or wash water.

Where contaminated material and cleaning fluids must be contained from heavy equipment such as drill rigs and support vehicles, the decontamination area must be properly floored. Preferred flooring for the decontamination area is typically a

Table 5. List of Selected Cleaning Solutions Used for Equipment Decontamination (Moberly, 1985)

Chemical	Solution	Uses/Remarks
Clean Potable Water	None	Used under high pressure or steam to remove heavy mud, etc., or to rinse other solutions
Low-Sudsing Detergents (Alconox)	Follow Manufacturer's Directions	General all-purpose cleaner
Sodium Carbonate (Washing Soda)	4#/10 Gal Water	Effective for neutralizing organic acids, heavy metals, metal processing wastes
Sodium Bicarbonate- (Baking Soda)	4#/10 Gal Water	Used to neutralize either base or neutral acid contaminants
Trisodium Phosphate (TSP Oakite)	2#/1O Gal Water	Similar to sodium carbonate
	4#/10 Gal Water	Useful for solvents & organic compounds (such as Toluene, Chloroform, Trichloroethylene). PBB's and PCB's
Calcium Hydrochloride (HTH)	8#/1O Gal Water	Disinfectant, bleaching & oxidizing agent used for pesticides, fungicides, chlorinated phenols, dioxins, cyanides, ammonia & other non-acidic inorganic wastes
Hydrochloric Acid	1 Pt/10 Gal Water	Used for inorganic bases, alkali and caustic wastes
Citric, Tartaric, Oxalic Acids (or their respective salts)	4#/10 Gal Water	Used to clean heavy metal contamination
Organic Solvents (Acetone, Methanol, Methylene Chloride)	Concentrated	Used to clean equipment contaminated with organics or well casing to remove surface oils, etc

reinforced, curbed, concrete pad which is sloped toward one corner where a sump pit is installed (Moberly, 1985). Where a concrete pad is impractical, planking can be used to construct a solid flooring that is then covered by a nonporous surface and sloped toward a collection facility. Catchment of contaminants and cleaning fluids from the decontamination of lighter-weight drilling equipment and hand tools can be accomplished by using small trenches lined with plastic sheeting or in wash tubs or stick cans. The contaminated cleaning fluids can be stored temporarily in metal or plastic cans or drums until removed from the site for proper disposal.

Effectiveness of Decontamination Procedures

A decontamination program for drilling and formation sampling equipment may need to include quality-control procedures for measuring the effectiveness of the cleaning methods. Quality-control measures typically include either equipment blank collection or wipe testing. Equipment blanks are samples of the final rinse water that are collected after cleaning the equipment. Equipment blanks should be collected in appropriate sampling containers, properly preserved, stored and transported to a laboratory for analyses of contaminants known or suspected at the site. Wipe testing is performed by wiping a cloth or paper patch over the surface of the equipment after cleaning. The test patch is placed in a sealed container and sent to a laboratory for analysis. Laboratory results from either equipment blanks or wipe tests provide "after-the-fact" information that may be used to evaluate whether or not the cleaning methods were effective in removing the contaminants of concern at the site.

Personnel Decontamination

A decontamination program for drilling and sampling equipment is typically developed in conjunction with health and safety plans for field personnel working at the site. Although a discussion of site safety plans and personnel protective measures are beyond the scope of this manual, the health and safety plan for field personnel should be of foremost concern when drilling in known or suspected contaminated areas. Specific health and safety procedures necessary at the site depend on the toxicity and physical and chemical properties of known or suspected contaminants. Where hazardous materials are involved or suspected, a site safety program should be developed by a qualified professional in accordance with the Occupational Safety and Health Administration requirements in 29 CFR 1910.120. Field personnel at hazardous sites should receive medical screening and basic health and safety training, as well as specific on-site training.

References

Electric Power Research Institute, 1985. Ground water manual for the electric utility industry: groundwater investigations and mitigation techniques, volume 3; Research Reports Center, Palo Alto, California, 360 pp.

Moberly, Richard L., 1985. Equipment decontamination; Ground Water Age, vol. 19, no. 8, pp. 36-39.

United States Department of Interior, 1974. Earth manual, a water resources technical publication; Bureau of Reclamation, United States Government Printing Office, Washington, D.C., 810 pp.

United States Environmental Protection Agency, 1984. Standard operating safety guides; United States Environmental Protection Agency Office of Emergency Response, United States Government Printing Office, Washington, D.C., 166 pp.

United States Environmental Protection Agency, 1987. A compendium of Superfund field operations methods; United States Environmental Protection Agency Publication No. 540/P-87/001, 644 pp.

Williamson, D.A., 1984. Unified classification system; Bulletin of Engineering Geologists, vol. 21, no. 3, The Association of Engineering Geologists, Lawrence, Kansas, pp. 345-354.

Section 4
Description and Selection of Drilling Methods

Introduction

Monitoring wells can be, and have been, installed by nearly every conceivable type of drilling and completion technique. However, every drilling technology has a special range of conditions where the technique is most effective in dealing with the inherent hydrogeologic conditions and in fulfilling the purpose of the monitoring well. For example, constructing wells by driving wellpoints or by jetting provides low-cost water-level information but severely limits the ability to collect detailed stratigraphic information.

The following section contains a description of common methods of monitoring well construction and includes a discussion of the applications and limitations of each technique. A matrix that helps the user determine the most appropriate technology for monitoring well installation in a variety of hydrogeologic settings with specific design objectives is also included in this section.

Drilling Methods for Monitoring Well Installation

Hand Augers

Hand augers may be used to install shallow monitoring wells (0 to 15 feet in depth) with casing diameters of 2 inches or less. A typical hand auger, as shown in Figure 23, cuts a hole that ranges from 3 to 9 inches in diameter. The auger is advanced by turning into the soil until the auger is filled. The auger is then removed and the sample is dumped from the auger. Motorized units for one- or two-operators are available.

Generally, the borehole cannot be advanced below the water table because the borehole collapses. It is often possible to stabilize the borehole below the water table by adding water, with or without drilling mud additives. The auger may then be advanced a few feet into a shallow aquifer and a well intake and casing installed. Another option to overcome borehole collapse below the water table is to drive a wellpoint into the augered hole and thereby advance the wellpoint below the water table. The wellpoint can then be used to measure water levels and to provide access for water-quality samples.

Better formation samples may sometimes be obtained by reducing the hole size one or more times while augering to the desired depth. Because the head of the auger is removable, the borehole diameter can be reduced by using smaller diameter auger heads. Shaft extensions are usually added in 3- or 4-foot increments. As the borehole size decreases, the amount of energy required to turn the auger is also reduced. Where necessary, short sections of lightweight casing can be installed to prevent upper material from caving into the borehole.

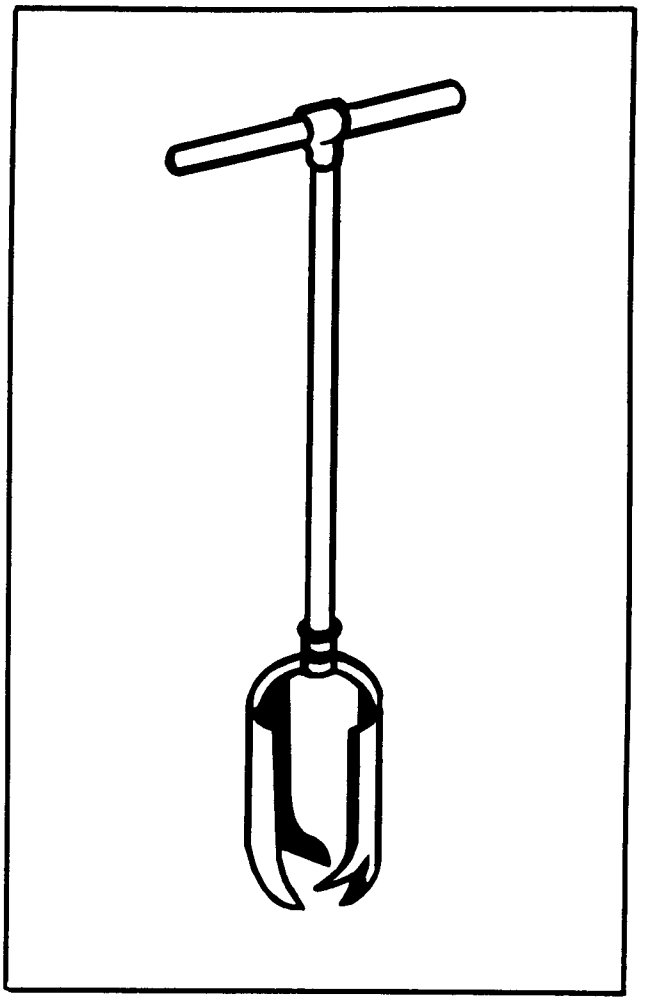

Figure 23. Diagram of a hand auger.

A more complete list of the applications and limitations of hand augers is found in Table 6.

Driven Wells

Driven wells consist of a wellpoint (screen) that is attached to the bottom of a casing (Figure 24). Wellpoints and casing are usually 1.25 to 2 inches in diameter and are made of steel to withstand the driving process. The connection between the wellpoint and the casing is made either by welding or using

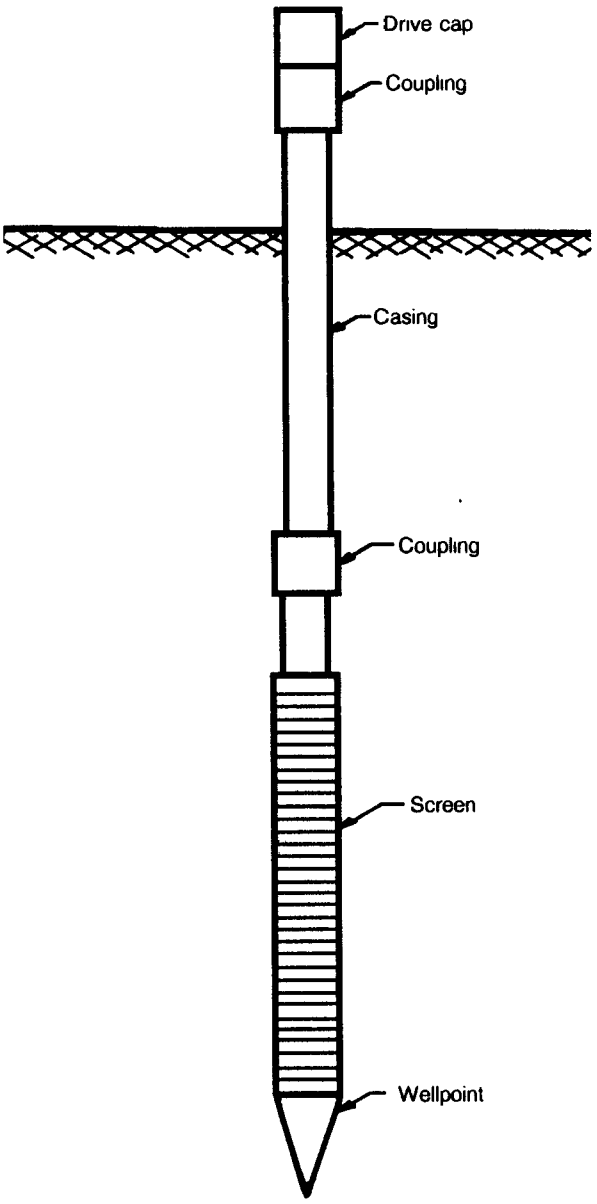

Figure 24. Diagram of a wellpoint.

drive couplings. Drive couplings are specially designed to withstand the force of the blows used to drive the casing; however, if the casing is overdriven it will usually fail at a coupling. When constructing a well, a drive cap is placed on top of the uppermost section of casing, and the screen and casing are driven into the ground. New sections of drive casing are usually attached in 4 or 5-foot sections as the well is driven deeper. Crude stratigraphic information can be obtained by recording the number of blows per foot of penetration as the wellpoint is driven.

Wellpoints can either be driven by hand or with heavy drive heads mounted on a tripod, stiff-leg derrick or similar hoisting device. When driven by hand, a weighted drive sleeve such as is used to install fence posts is typically used. Depths up to 30 feet can be achieved by hand in sands or sand and gravel with thin clay seams; greater depths of 50 feet or more are possible with hammers up to 1,000 pounds in weight. Driving through dense silts and clays and/or bouldery silts and clays is often extremely difficult or impossible. In the coarser materials, penetration is frequently terminated by boulders. Additionally, if the wellpoint is not structurally strong it may be destroyed by driving in dense soils or by encountering boulders. When driving the wellpoint through silts and/or clays the screen openings in the wellpoint may become plugged. The screen may be very difficult to clean or to reopen during development, particularly if the screen is placed in a low permeability zone.

To lessen penetration difficulties and screen clogging problems, driven wells may be installed using a technique similar to that used in cable tool drilling. A 4-inch casing (with only a drive shoe and no wellpoint) may be driven to the targeted monitoring depth. As the casing is driven, the inside of the casing is cleaned using a bailing technique. With the casing still in the borehole, a wellpoint attached to an inner string of casing is lowered into the borehole and the outer casing is removed. As the casing is removed, the well must be properly sealed and grouted. A second option can also be used to complete the well. With the casing still in the borehole, a wellpoint with a packer at the top can be lowered to the bottom of the casing. The casing is then pulled back to expose the screen. The original casing remains in the borehole to complete the well. Either of these completion techniques permit the installation of thermoplastic or fluoropolymer in addition to steel as the screen material.

A more complete listing of the applications and limitations of driven wells is found in Table 7.

Jet Percussion

In the jet-percussion drilling method, a wedge-shaped drill bit is attached to the lower end of the drill pipe (Figure 25). Water is pumped down the drill pipe under pressure and discharges through ports on each side of the drill bit. The bit is alternately raised and dropped to loosen unconsolidated materials or to break up rock at the bottom of the borehole. Concomitantly, the drill pipe is rotated by hand, at the surface, to cut a round and straight hole. The drilling fluid flows over the bit and up the annular space between the drill pipe and the borehole wall. The drilling fluid lubricates the bit, carries cuttings to the surface and deposits the cuttings in a settling pit. The fluid is then recirculated down the drill pipe.

In unconsolidated material the casing is advanced by a drive-block as the borehole is deepened. If the casing is positioned near the bottom of the borehole, good samples can be obtained as the cuttings are circulated to the surface and stratigraphic variations can be identified. Where the borehole is stable, the well can be drilled without simultaneously driving the casing.

After the casing has been advanced to the desired monitoring depth, a well intake can be installed by lowering through the casing. The casing is then pulled back to expose the well intake. Casing diameters of 4 inches or less can be installed by jet percussion. Depths of wells are typically less than 150 feet, although much greater depths have been attained. This method is most effective in drilling unconsolidated sands.

Table 10. Applications and Limitations of Hollow-Stem Augers

Applications	Limitations
• All types of soil investigations • Permits good soil sampling with split-spoon or thin-wall samplers • Water quality sampling • Monitoring well installation in all unconsolidated formations • Can serve as temporary casing for coring rock • Can be used in stable formations to set surface casing (example: drill 12-inch borehole; remove auger; set 8-inch casing; drill 7 1/4-inch borehole with 3 1/4-inch ID augers to rock; core rock with 3-inch tools; install 1-inch piezometer; pull augers)	• Difficulty in preserving sample integrity in heaving formations • Formation invasion by water or drilling mud if used to control heaving • Possible cross contamination of aquifers where annular space not positively controlled by water or drilling mud or surface casing • Limited diameter of augers limits casing size • Smearing of clays may seal off aquifer to be monitored

of the borehole. At the surface, the fluid discharges through a pipe or ditch and enters into a segregated or baffled sedimentation tank, pond or pit. The settling pit overflows into a suction pit where a pump recirculates the fluid back through the drill rods (Figure 29).

During drilling, the drill stem is rotated at the surface by either top head or rotary table drive. Down pressure is attained either by pull-down devices or drill collars. Pull-down devices transfer rig weight to the bit; drill collars add weight directly to the drill stem. When drill collars are used, the rig holds back the excess weight to control the weight on the bit. Most rigs that are used to install monitoring wells use the pull-down technique because the wells are relatively shallow.

Properly mixed drilling fluid serves several functions in mud rotary drilling. The mud: 1) cools and lubricates the bit, 2) stabilizes the borehole wall, 3) prevents the inflow of formation fluids and 4) minimizes cross contamination between aquifers. To perform these functions, the drilling fluid tends to infiltrate permeable zones and tends to interact chemically with the formation fluids. This is why the mud must be removed during the development process. This chemical interaction can interfere with the specific function of a monitoring well and prevent collection of a sample that is representative of the in-situ ground-water quality.

Samples can be obtained directly from the stream of circulated fluid by placing a sample-collecting device such as a shale shaker in the discharge flow before the settling pit. However, the quality of the samples obtained from the circulated fluid is generally not satisfactory to characterize the formations for the design of monitoring wells. Split-spoon, thin-wall or wireline samples can and should be collected when drilling with the direct rotary method.

Both split-spoon and thin-wall samples can be obtained in unconsolidated material by using a bit with an opening through which sampling tools can be inserted. Drilling fluid circulation must be broken to collect samples. The rotary drill stem acts as casing as the sample tools are inserted through the drillstem and bit and a sample is collected.

Direct rotary drilling is also an effective means of drilling and/or coring consolidated rock. Where overburden is present, an oversized borehole is drilled into rock and surface casing is installed and grouted in place. After the grout sets, drilling proceeds using a roller cone bit (Figure 30). Samples can be taken either from the circulated fluid or by a core barrel that is inserted into the borehole.

For the rig sizes that are most commonly used for monitoring well installation, the maximum diameter borehole is typically 12 inches. Unconsolidated deposits are sometimes drilled with drag or fishtail-type bits, and consolidated formations such as sandstone and shale are drilled with tricone bits. Where surface casing is installed, nominal 8-inch casing is typically used, and a 7 5/8 or 7 7/8-inch borehole is continued below the casing. In unconsolidated formations, these diameters permit a maximum 4-inch diameter monitoring well to be installed, filter-packed and sealed in the open borehole. In consolidated formations, a 4 5/8-inch outside diameter casing can be used in a 7 5/8-inch borehole because there are relatively few borehole wall stability problems in consolidated rock. This smaller annular space is usually sufficient to permit tremie placement of filter pack, bentonite seal and grout.

A more complete listing of applications and limitations of direct mud rotary drilling is found in Table 11.

Table 11. Applications and Limitations of Direct Mud Rotary Drilling

Applications	Limitations
• Rapid drilling of clay, silt and reasonably compacted sand and gravel • Allows split-spoon and thin-wall sampling in unconsolidated materials • Allows core sampling in consolidated rock • Drilling rigs widely available • Abundant and flexible range of tool sizes and depth capabilities • Very sophisticated drilling and mud programs available • Geophysical borehole logs	• Difficult to remove drilling mud and wall cake from outer perimeter of filter pack during development • Bentonite or other drilling fluid additives may influence quality of ground-water samples • Circulated (ditch) samples poor for monitoring well screen selection • Split-spoon and thin-wall samplers are expensive and of questionable cost effectiveness at depths greater than 150 feet • Wireline coring techniques for sampling both unconsolidated and consolidated formations often not available locally • Difficult to identity aquifers • Drilling fluid invasion of permeable zones may compromise validity of subsequent monitoring well samples

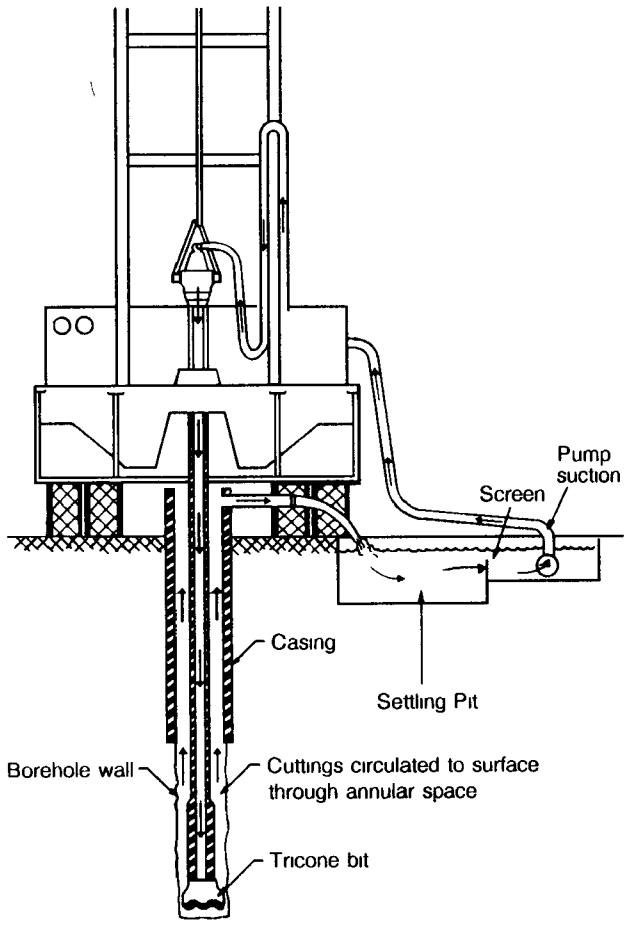

Figure 29. Diagram of a direct rotary circulation system (National Water Well Association of Australia, 1984).

Air Rotary Drilling

Air rotary drilling is very similar to direct mud rotary with the exception that the circulation medium is air instead of water or drilling mud. Air is compressed and circulated down through the drill rods and up the open hole. The rotary drill bit is attached to the lower end of the drill pipe, and the drill bit is advanced as in direct mud rotary drilling. As the bit cuts into the formation, cuttings are immediately removed from the bottom of the borehole and transported to the surface by the air that is circulating down through the drill pipe and up the annular space. The circulating air also cools the bit. When there is no water entering the borehole from the formation, penetration and sampling may be enhanced by adding small quantities of water and/or foaming surfactant. Foam very effectively removes the cuttings and lubricates and cools the bit. However, the drilling foam is not chemically inert and may react with the formation water. Even if the foam is removed during the development process, the representativeness of the ground-water quality sample may be questioned.

As the air discharges cuttings at the surface, formation samples can be collected. When the penetrated formation is dry, samples are typically very fine-grained. This "dust" is representative of the formation penetrated, but is difficult to evaluate in terms of the physical properties and characteristics of the formation. However, when small quantities of water are encountered during drilling or when water and surfactant are added to the borehole to assist in the drilling process, the size of the fragments that are discharged at the surface is much larger. These larger fragments provide excellent quality samples that are easier to interpret. Because the borehole is cleaned continuously and all of the cuttings are discharged, there is minimal opportunity for recirculation and there is minimal contamination of the cuttings by previously-drilled zones. Air discharged from a compressor commonly contains hydrocarbon-related contaminants. For this reason, it is necessary to install filters on the discharge of the compressor.

When drilling through relatively dry formations, thick water-bearing zones can easily be observed as drilling proceeds. However, thin water-bearing zones often are not identifiable because either the pressure of the air in the borehole exceeds the hydraulic pressure of the water-bearing zone or the combination and quantity of dust and air discharged is sufficient to remove the small amount of moisture indicative of the thin water-bearing zone. Where thin zones are anticipated, the samples must be carefully evaluated and drilling sometimes must be slowed to reduce absorption of the water by the dust. It may be desirable to frequently stop drilling to allow ground water to enter the open borehole. This technique applies only to the first water-bearing zones encountered, because shallower zones may contribute water to the open borehole. To prevent shallow zones from producing water or to prevent cross contamination, the shallower zones must be cased off. Identification of both thin and thick water-bearing zones is extremely important because this information assists greatly in the placement of well intakes and/or in the selection of isolated zones for packer tests.

In hard, abrasive, consolidated rock, a down-the-hole hammer can be substituted for a roller cone bit to achieve better penetration (Figure 31). With the down-the-hole drill, the compressed air that is used to cool the bit is also used to actuate and operate the down-the-hole hammer. Typical compressed air requirements range from 100 pounds per square inch to as much as 350 pounds per square inch for the latest generation of down-the-hole hammers. When a down-the-hole hammer is used, oil is required in the air stream to lubricate the hammer-actuating device. For this reason, down-the-hole hammers must be used with caution when constructing monitoring wells. Figure 32 shows the range of materials in which roller cone bits and down-the-hole pneumatic hammers operate most efficiently.

Air rotary drilling is typically limited to drilling in consolidated rock because of borehole instability problems. In air rotary drilling, no casing or drilling fluid is added to support the borehole walls, and the borehole is held open by stability of the rock and/or the air pressure used during drilling. In unconsolidated materials, there is the tendency for the borehole to collapse during drilling. Therefore, air rotary drilling in unconsolidated formations is unreliable and poses a risk for equipment. Where sufficient thicknesses of unconsolidated deposits overlie a consolidated formation that will be drilled by air rotary techniques, surface casing through the unconsolidated material is installed by an alternative technique. Drilling can then be accomplished using air with either a roller-cone bit or down-the-hole hammer.

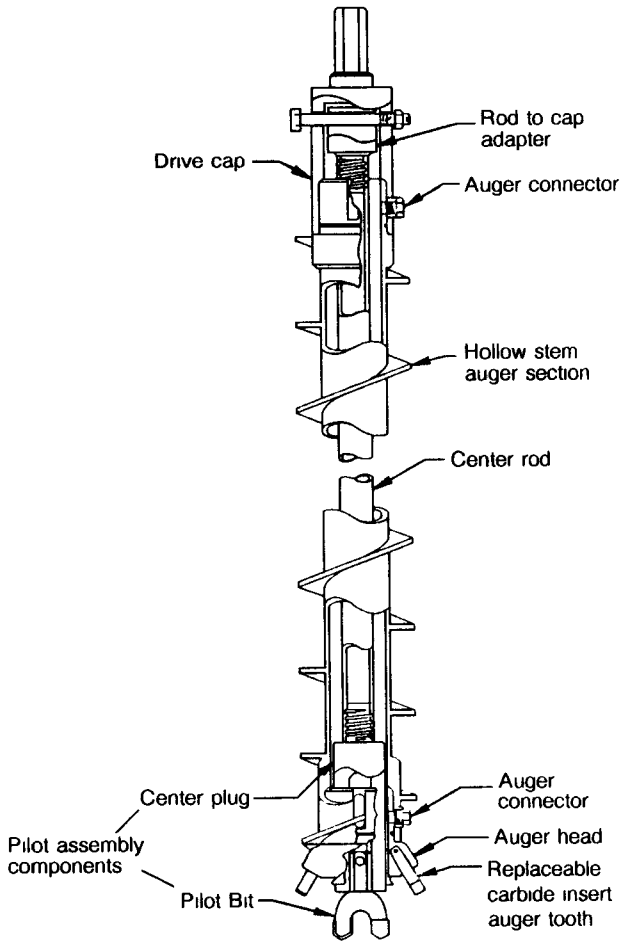

Figure 27. Typical components of a hollow-stem auger (after Central Mine Equipment Company, 1987).

(ASTM, 1586) or thin-wall (ASTM, 1587) sampler is placed on the lower end of the drill rods and lowered to the bottom of the borehole. The split-spoon sampler can then be driven to collect a disturbed sample or the thin-wall sampler can be pressed to collect an "undisturbed" sample from the strata immediately below the cutting head of the auger. Samples can either be taken continuously or at selected intervals. If sampling is continuous, the augers are rotated down to the bottom of the previously-sampled strata and cleaned out if necessary. The sampler is then reinserted through the auger and advanced into the undisturbed sediments ahead of the auger.

With the augers acting as casing and with access to the bottom of the borehole through the hollow stem, it is possible to drill below the top of the saturated zone. When the saturated zone is penetrated, finely-ground material and water may mix to form a mud that coats the borehole wall. This "mud plaster" may seal water-bearing zones and minimize inter-zonal cross connection. This sealing is uncontrolled and unpredictable because it depends on: 1) the quality of the silt/clay seal, 2) the differential hydrostatic pressure between the zones and 3) the transmissivity of the zones. Therefore, where possible cross contamination is a concern, the seal developed during augering cannot be relied upon to prevent cross contamination. One other potential source of cross contamination is through leakage into or out of the augers at the flighting joints. This leakage can be minimized by installing o-ring seals at the joints connecting the flights.

While drilling with hollow-stem augers with the center of the stem open, formation material can rise into the hollow stem as the auger is advanced. This material must be cleaned out of the auger before formation samples are collected. To prevent intrusion of material while drilling, hollow-stem auger boreholes can be drilled with a center plug that is installed on the bottom of the drill rods and inserted during drilling. A small drag bit may also be added to prevent intrusion into the hollow stem. An additional discussion on drilling with hollow-stem augers can be found in Appendix A, entitled, "Drilling and Constructing Monitoring Wells with Hollow-Stem Augers." Samples are collected by removing the drill rods and the attached center plug and inserting the sampler through the hollow stem. Samples can then be taken ahead of the augers.

When drilling into an aquifer that is under even low to moderate confining pressure, the sand and gravel of the aquifer frequently "heave" upward into the hollow stem. This heaving occurs because the pressure in the aquifer is greater than the atmospheric pressure in the borehole. If a center plug is used during drilling, heave frequently occurs as the rods are pulled back and the bottom of the borehole is opened. This problem is exacerbated by the surging action created as the center plug and drill rods are removed.

When heaving occurs, the bottom portion of the hollow stem fills with sediment, and the auger must be cleaned out before formation samples can be collected. However, the act of cleaning out the auger can result in further heaving, thus compounding the problem. Furthermore, as the sand and gravel heave upward into the hollow stem, the materials immediately below the auger are no longer naturally compacted or stratified. The sediments moving into the hollow stem are segregated by the upward-flowing water. It is obvious that once heaving has

Table 9. Applications and Limitations of Solid-Flight Augers

Applications	Limitations
• Shallow soils investigations	• Unacceptable soil samples unless split-spoon or thin-wall samples are taken
• Soil samples	• Soil sample data limited to areas and depths where stable soils are predominant
• Vadose zone monitoring wells (lysimeters)	
• Monitoring wells in saturated, stable soils	• Unable to install monitoring wells in most unconsolidated aquifers because of borehole caving upon auger removal
• Identification of depth to bedrock	• Depth capability decreases as diameter of auger increases
• Fast and mobile	• Monitoring well diameter limited by auger diameter

occurred, it is not possible to obtain a sample at that depth that is either representative or undisturbed.

Four common strategies that are used to alleviate heaving problems include:

1) adding water into the hollow stem in an attempt to maintain sufficient positive head inside the augers to offset the hydrostatic pressure of the formation;
2) adding drilling mud additives (weight and viscosity control) to the water inside the hollow stem to improve the ability of the fluid to counteract the hydrostatic pressure of the formation;
3) either screening the lower auger section or screening the lowermost portion of the drill rods both above and below the center plug, in such a manner that water is allowed to enter the auger. This arrangement equalizes the hydraulic pressure, but prevents the formation materials from entering the augers; and
4) drilling with a pilot bit, knock-out plug or winged clam to physically prevent the formation from entering the hollow stem.

The most common field procedure is to add water to the hollow stem. However, this method is frequently unsuccessful because it is difficult to maintain enough water in the auger to equalize the formation pressure as the drill rods are raised during the sampling process. Adding drilling mud may lessen the heaving problem, but volume replacement of mud displacement by removal of drilling rods must be fast enough to maintain a positive head on the formation. Additionally, drilling mud additives may not be desirable where questions about water-quality sampling from the monitoring well will arise. A third option, screening the lowermost auger flight, serves two purposes: 1) the formation pressure can equalize with minimal formation disturbance and 2) water-quality samples and small-scale pumping tests can be performed on individual zones within the aquifer or on separate aquifers as the formations are encountered. Wire-wound screened augers were developed particularly for this purpose and are commercially available (Figure 28). By using a pilot bit, knock-out plug or winged clam, heaving is physically prevented until these devices are removed for sampling. In essence, the hollow stem functions as a solid stem auger. However, once these devices are dislodged during sampling, problems with heaving may still need to be overcome by using an alternative strategy.

Hollow-stem augers are typically limited to drilling in unconsolidated materials. However, if the cutting head of the auger is equipped with carbide-tipped cutting teeth, it is often possible to drill into the top of weathered bedrock a short distance. The augers can then be used as temporary surface casing to shut off water flow that commonly occurs at the soil/rock interface. The seal by the augers may not be complete; therefore, this practice is not recommended where cross contamination is a concern. The rock beneath the casing can then be drilled with a small-diameter roller bit or can be cored.

The most widely-available hollow-stem augers are 6.25-inch outside diameter auger flights with 3.25-inch inside diameter hollow stems. The equipment most frequently available to power the augers can reach depths of 150 to 175 feet in clayey/silty/sandy soils. Much greater depths have been attained, but greater depths cannot be predictably reached in most settings. A 12-inch outside diameter auger with a 6-inch inside diameter hollow stem is becoming increasingly available, but the depth limit for this size auger is usually 50 to 75 feet. Because of the availability and relative ease of formation sample collection, hollow-stem augering techniques are used for the installation of the overwhelming majority of monitoring wells in the United States.

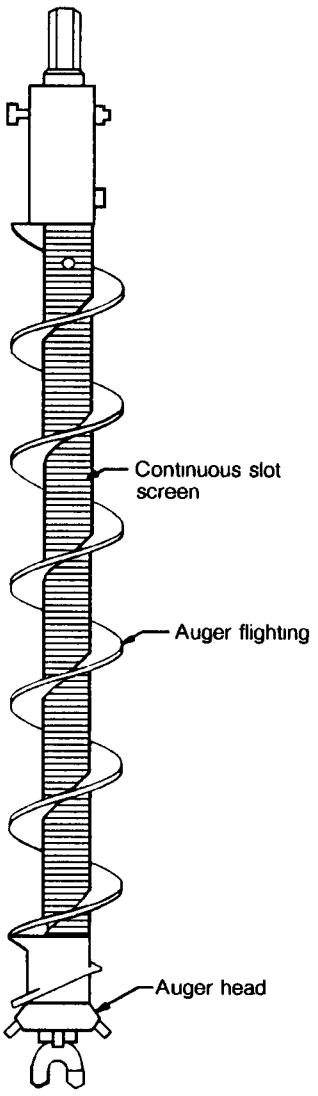

Figure 28. Diagram of a screened auger.

A more complete listing of the advantages and disadvantages of hollow-stem augers is found in Table 10. A more comprehensive evaluation of this technology is presented in Appendix A.

Direct Mud Rotary

In direct mud rotary drilling, the drilling fluid is pumped down the drill rods and through a bit that is attached at the lower end of the drill rods. The fluid circulates back to the surface by moving up the annular space between the drill rods and the wall

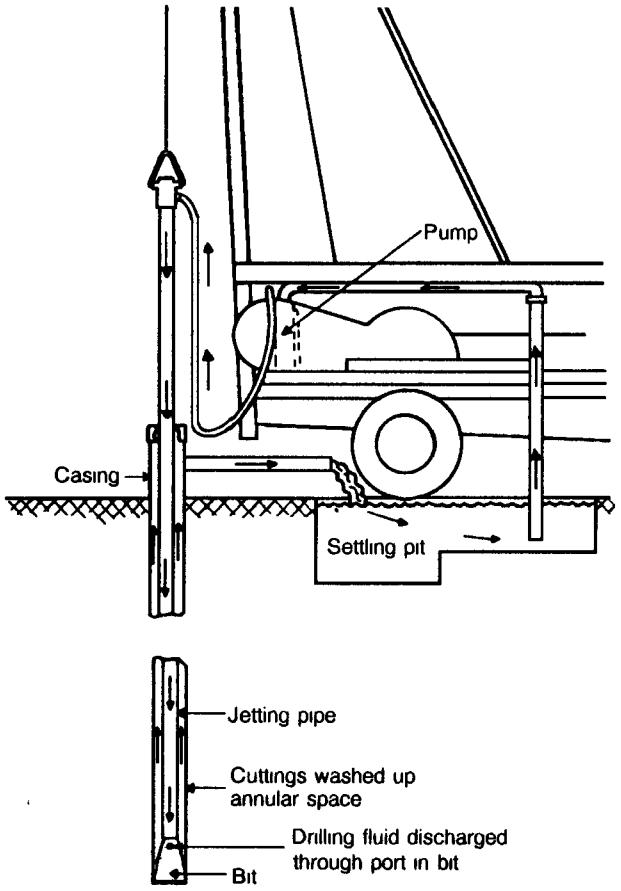

Figure 25. Diagram of jet-percussion drilling (after Speedstar Division of Koehring Company, 1983).

A more complete listing of applications and limitations of jet-percussion drilling is found in Table 8.

Solid-Flight Augers

Solid-flight augers (i.e. solid-stem, solid-core or continuous flight augers) are typically used in multiple sections to provide continuous flighting. The first, or lowermost, flight is provided with a cutter head that is approximately 2 inches larger in diameter than the flighting of the augers (Figure 26). As the cutting head is advanced into the earth, the cuttings are rotated upward to the surface by moving along the continuous flighting.

The augers are rotated by a rotary drive head at the surface and forced downward by a hydraulic pulldown or feed device. The individual flights are typically 5 feet in length and are connected by a variety of pin, box and keylock combinations and devices. Where used for monitoring well installation, available auger diameters typically range from 6 to 14 inches in outside diameter. Many of the drilling rigs used for monitoring well installation in stable unconsolidated material can reach depths of approximately 70 feet with 14-inch augers and approximately 150 feet with 6-inch augers.

In stable soils, cuttings can sometimes be collected at the surface as the material is rotated up the auger flights. The sample being rotated to the surface is often bypassed, however,

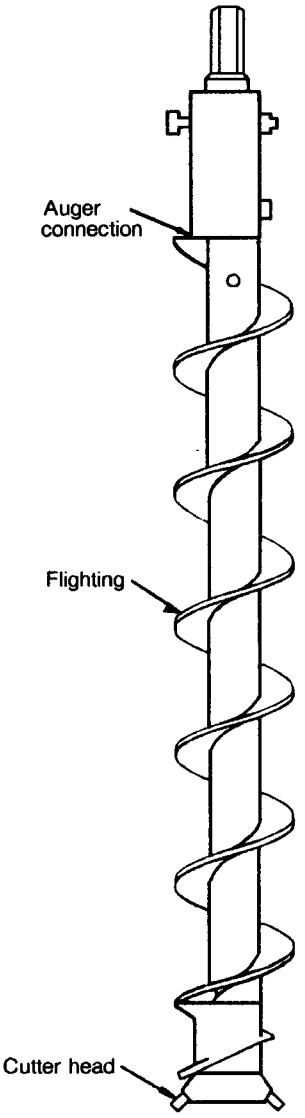

Figure 26. Diagram of a solid-flight auger (after Central Mine Equipment Company, 1987).

by being pushed into the borehole wall of the shallower formations. The sample often falls back into the borehole along the annular opening and may not reach the surface until thoroughly mixed with other materials. There is commonly no return of samples to the surface after the first saturated zone has been encountered.

Samples may also be collected by carefully rotating the augers to the desired depth, stopping auger rotation and removing the augers from the borehole. In a relatively stable formation, samples will be retained on the auger flights as the augers are removed from the borehole. The inner material is typically more representative of the formation at the drilled depths and may be exposed by scraping the outer material away from the sample on the augers. Because the borehole often caves after the saturated zone is reached, samples collected below the water table are less reliable. The borehole must be redrilled every time the augers are removed, and the formation not yet drilled may be disturbed as the borehole above collapses. This is particularly true in heaving formations.

Table 6. Applications and Limitations of Hand Augers

Applications	Limitations
• Shallow soils investigations • Soil samples • Water-bearing zone identification • Piezometer, lysimeter and small diameter monitoring well installation • Labor intensive, therefore applicable when labor is inexpensive • No casing material restrictions	• Limited to very shallow depths • Unable to penetrate extremely dense or rocky soil • Borehole stability difficult to maintain • Labor intensive

Table 7. Applications and Limitations of Driven Wells

Applications	Limitations
• Water-level monitoring in shallow formations • Water samples can be collected	• Depth limited to approximately 50 feet (except in sandy material)
• Dewatering	• Small diameter casing
• Water supply	• No soil samples
• Low cost encourages multiple sampling points	• Steel casing interferes with some chemical analysis
	• Lack of stratigraphic detail creates uncertainty regarding screened zones and/or cross contamination
	• Cannot penetrate dense and/or some dry materials
	• No annular space for completion procedures

Table 8. Applications and Limitations of Jet-Percussion Drilling

Applications	Limitations
• Allows water-level measurement • Sample collection in form of cuttings to surface • Primary use in unconsolidated formations, but may be used in some softer consolidated rock • Best application is cinch borehole with 2-inch casing and screen installed, sealed and grouted	• Drilling mud may be needed to return cuttings to surface • Diameter limited to 4 inches • Installation slow in dense, bouldery clay/till or similar formations • Disturbance of the formation possible if borehole not cased immediately

Because the core of augers is solid steel, the only way to collect "undisturbed" split-spoon or thin-wall samples is to remove the entire string of augers from the borehole, insert the sampler on the end of the drill rod, and put the entire string back into the borehole. This sampling process becomes very tedious and expensive as the borehole gets deeper because the complete string of augers must be removed and reinserted each time a sample is taken. Sampling subsequent to auger removal is only possible if the walls of the borehole are sufficiently stable to prevent collapse during sampling. Boreholes are generally not stable after even a moderately thin saturated zone has been penetrated. This means that it is visually not possible to obtain either split-spoon or thin-wall samples after the shallowest water table is encountered.

The casing and well intake are also difficult to install after a saturated zone has been penetrated. In this situation, it is sometimes possible to auger to the top of a saturated zone, remove the solid augers and then install a monitoring well by either driving, jetting or bailing a well intake into position.

A more complete listing of the applications and limitations of solid-flight augers is found in Table 9.

Hollow-Stem Augers

Similar to solid-flight augers, hollow-stem auger drilling is accomplished using a series of interconnected auger flights with a cutting head at the lowermost end. As the augers are rotated and pressed downward, the cuttings are rotated up the continuous flighting.

Unlike the solid-flight augers the center core of the auger is open in the hollow-stem flights (Figure 27). Thus, as the augers are rotated and pressed into the ground, the augers act as casing and stabilize the borehole. Small-diameter drill rods and samplers can then be passed through the hollow center of the augers for sampling. The casing and well intake also can be installed without borehole collapse.

To collect the samples through hollow-stem augers, the augers are first rotated and pressed to the desired sampling depth. The inside of the hollow stem is cleaned out, if necessary. The material inside the auger can be removed by a spoon sampler with a retainer basket, jetting and/or drilling with a bit attached to smaller-diameter drill rods. If the jetting action is carried to the bottom of the augers, the material immediately below the augers will be disturbed. Next, either a split-spoon

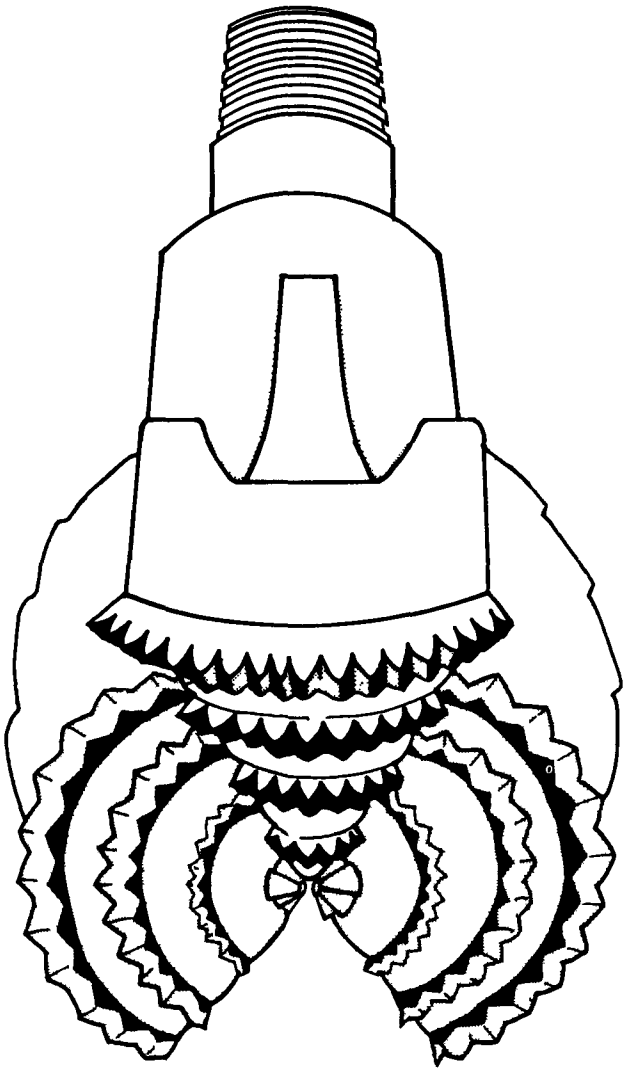

Figure 30. Diagram of a roller cone bit.

Monitoring wells drilled by air rotary methods are typically installed as open-hole completions. Because the borehole is uncased, the potential exists for cross connection between water-bearing zones within the borehole. Further, the recirculated air effectively cleans cuttings from the borehole walls so that the borehole is usually not coated with a wall cake such as occurs with mud rotary drilling or with augering techniques. This cleaner borehole wall increases the potential for cross connection, but increases the effectiveness of well completion and development. Additionally, the air introduced during drilling may strip volatile organics from the samples taken during drilling and from the ground water in the vicinity of the borehole. With time, the effects of airstripping will diminish and disappear, but the time necessary for this recovery will vary with the hydrogeologic conditions. The importance of these factors needs to be evaluated before choosing the air rotary drilling technique.

The diameter of the roller-cone or tri-cone bit used in air rotary drilling is limited to approximately 12 inches, although larger bits are available. For the down-the-hole hammer, the practical limitation is 8-inch nominal diameter. There is no significant depth limitation for monitoring well construction with the air rotary technique, with the possible exception of compressor capacity limits in deep holes with high water tables and back pressure.

A more complete list of applications and limitations of air rotary drilling is found in Table 12.

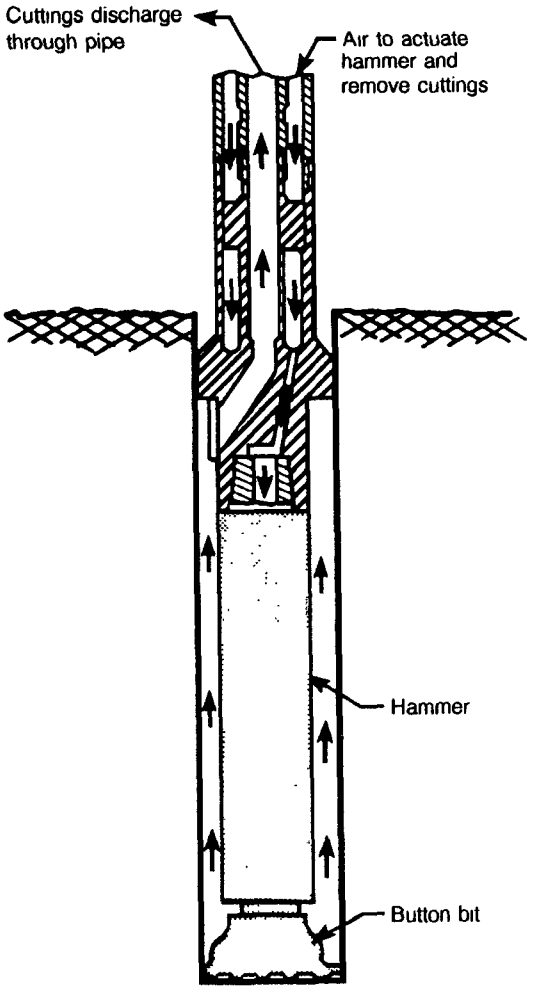

Figure 31. Diagram of a down-the-hole hammer (after Layne-Western Company, Inc., 1983).

Air Rotary With Casing Driver

This method is an adaptation of air rotary drilling that uses a casing-driving technique in concert with air (or mud) rotary drilling. The addition of the casing driver makes it possible to use air rotary drilling techniques in unconsolidated formations. The casing driver is installed in the mast of a top head drive air rotary drilling rig. The casing can then be driven as the drill bit is advanced (Figure 33).

The normal drilling procedure is to extend the drill bit 6 to 12 inches ahead of the casing. The distance that the drill bit can be extended beyond the casing is primarily a function of the stability of the borehole wall. It is also possible to drive the casing ahead of the bit. This procedure can be performed in unconsolidated formations where caving and an oversize borehole are of concern. Once the casing has been driven approximately one foot into the formation, the drill bit is used to clean the material from inside the casing. This technique also minimizes air or mud contact with the strata.

Where drilling through unconsolidated material and into consolidated bedrock, the unconsolidated formation is drilled with a drill bit as the casing is simultaneously advanced. When the casing has been driven into the top of the bedrock, drilling can proceed by the standard air rotary technique. The air rotary with casing driver combination is particularly efficient where drilling through the sand-gravel-silt-boulder-type materials that commonly occur in glaciated regions. The sandy and/or gravelly, unstable zones are supported by the casing while the boulder and till zones are rapidly penetrated by the rotary bit. Because the upper zones within the formation are cased-off as the borehole is advanced, the potential for inter-aquifer cross-contamination is minimized. The protective casing also permits the collection of reliable formation samples because the entire formation is cased except for the interval that is presently being cut. An additional advantage of the drill-through casing driver is that the same equipment can be used to drive the casing upward to expose the well intake after the casing and well intake have been installed in the borehole.

Water-bearing zones can be readily identified and water yields can be estimated as drilling progresses. However, as with the direct air rotary method, zones that have low hydrostatic pressure may be inhibited from entering the borehole by the air pressure exerted by the drilling process. Additionally, the dust created as the formation is pulverized can serve to seal off these zones and then these water-bearing zones may be overlooked. For these reasons, it is necessary to drill slowly and carefully and even occasionally to stop drilling where water-bearing zones are indicated or anticipated.

A more complete list of applications and limitations of the air rotary with casing driver method is found in Table 13.

Dual-Wall Reverse-Circulation

In dual-wall reverse-circulation rotary drilling, the circulating fluid is pumped down between the outer casing and the inner drill pipe, out through the drill bit and up the inside of the drill pipe (Figure 34).

Table 12. Applications and Limitations of Air Rotary Drilling

Applications	Limitations
• Rapid drilling of semi-consolidated and consolidated rock • Good quality/reliable formation samples (particularly if small quantities of water and surfactant are used) • Equipment generally available • Allows easy and quick identification of lithologic changes • Allows identification of most water-bearing zones • Allows estimation of yields in strong water-producing zones with short "down time"	• Surface casing frequently required to protect top of hole • Drilling restricted to semi-consolidated and consolidated formations • Samples reliable but occur as small particles that are difficult to interpret • Drying effect of air may mask lower yield water producing zones • Air stream requires contaminant filtration • Air may modify chemical or biological conditions. Recovery time is uncertain.

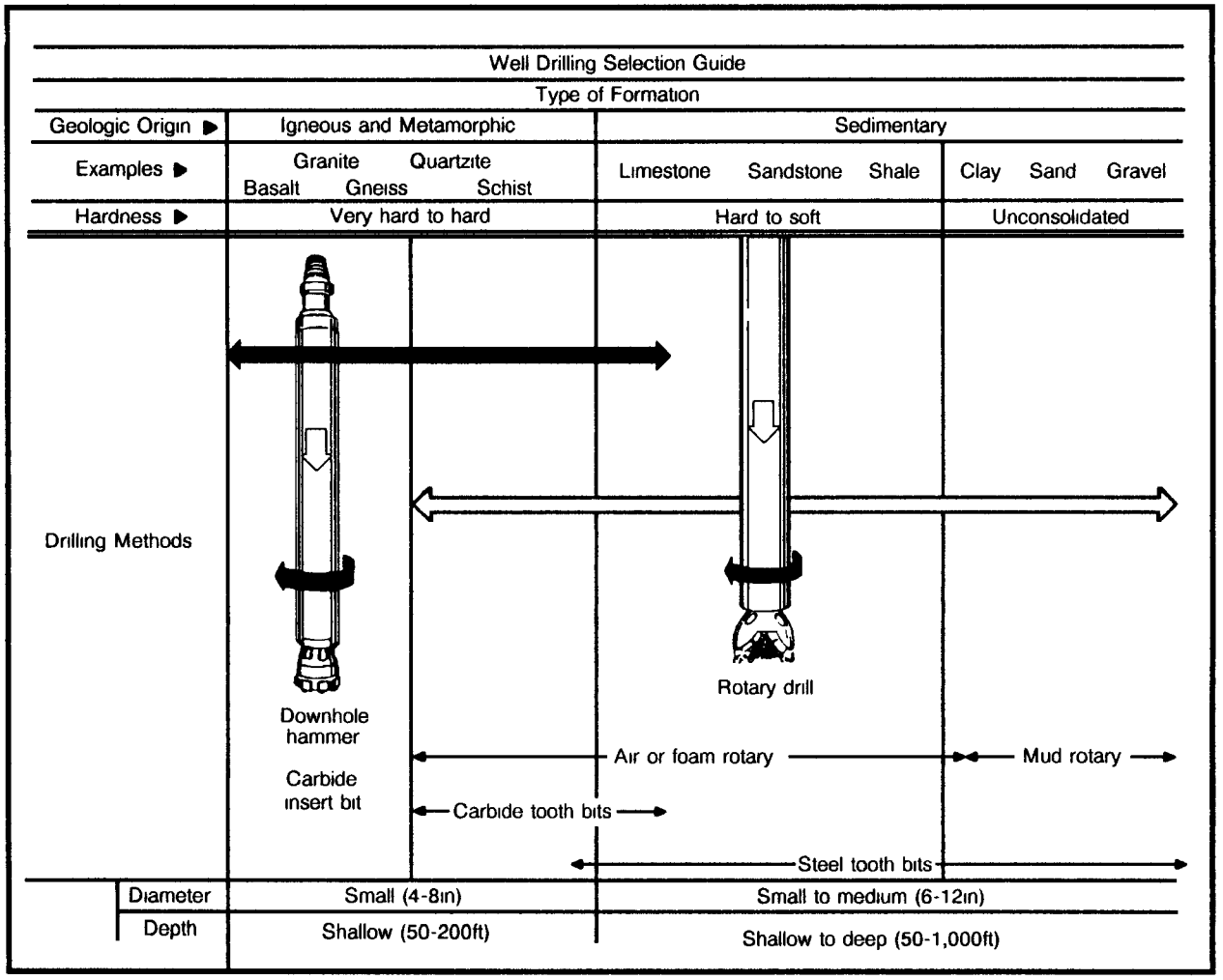

Figure 32. Range of applicability for various rotary drilling methods (Ingersoll-Rand, 1976).

The circulation fluid used in the dual-wall reverse circulation method can be either water or air. Air is the suggested medium for the installation of monitoring wells, and, as such, it is used in the development of the ratings in Appendix B. The inner pipe or drill pipe rotates the bit, and the outer pipe acts as casing. Similar to the air rotary with casing driver method, the outer pipe: 1) stabilizes the borehole, 2) minimizes cross contamination of cuttings and 3) minimizes interaquifer cross contamination within the borehole.

The dual-wall reverse-circulation rotary method is one of the better techniques available for obtaining representative and continuous formation samples while drilling. If the drill bit is of the roller-cone type, the formation that is being cut is located only a few inches ahead of the double-wall pipe. The formation cuttings observed at the surface represent no more than one foot of the formation at any point in time. The samples circulated to the surface are thus representative of a very short section of the formation. When drilling with air, a very representative sample of a thin zone can be obtained from the formation material and/or the formation water. Water samples can only be obtained where the formation has sufficient hydrostatic pressure to overcome the air pressure and dust dehydration/sealing effects. (Refer to the section on air rotary with casing driver for a more complete discussion.)

Unconsolidated formations can be penetrated quite readily with the dual-wall reverse-circulation method. Formations that contain boulders or coarse gravelly materials that are otherwise very difficult to drill can be relatively easily penetrated with this technique. This increased efficiency is due to the ability of the method to maximize the energy at the bottom of the borehole while the dual-wall system eliminates problems with lost circulation and/or borehole stability.

When drilling in hard rock a down-the-hole hammer can be used to replace the tri-cone bit. When the down-the-hole hammer is employed, air actuates the hammer by: 1) moving down through the hammer, 2) moving back up the outside of the hammer and 3) re-entering the center drill pipe in a cross-over

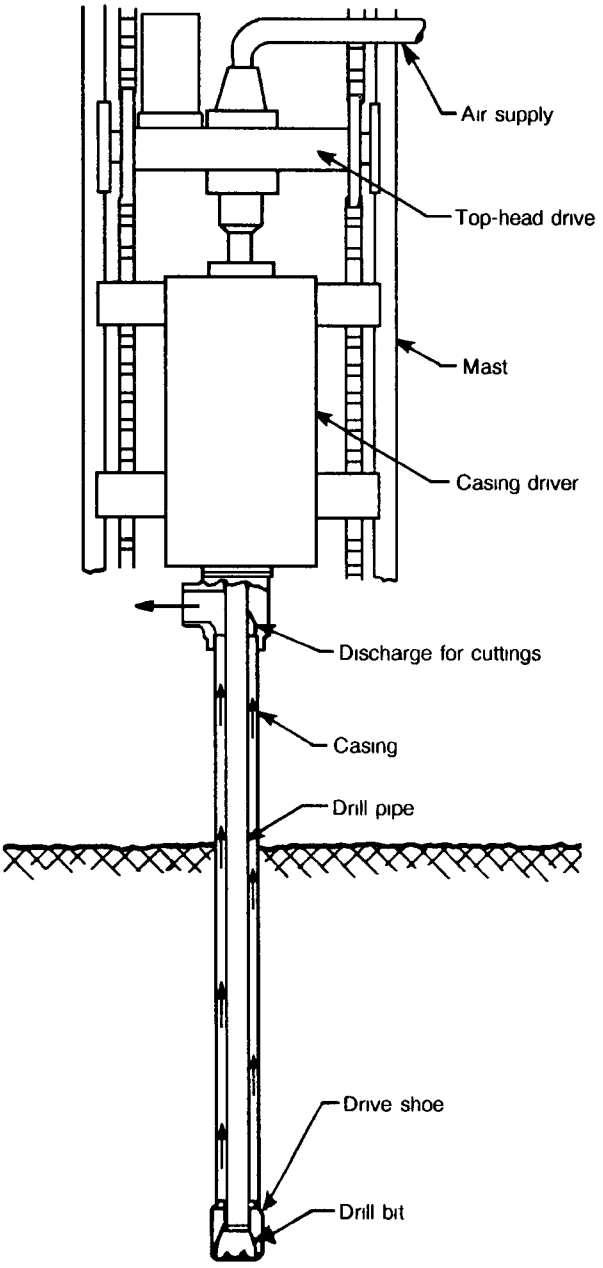

Figure 33. Diagram of a drill-through casing driver (Aardvark Corporation, 1977).

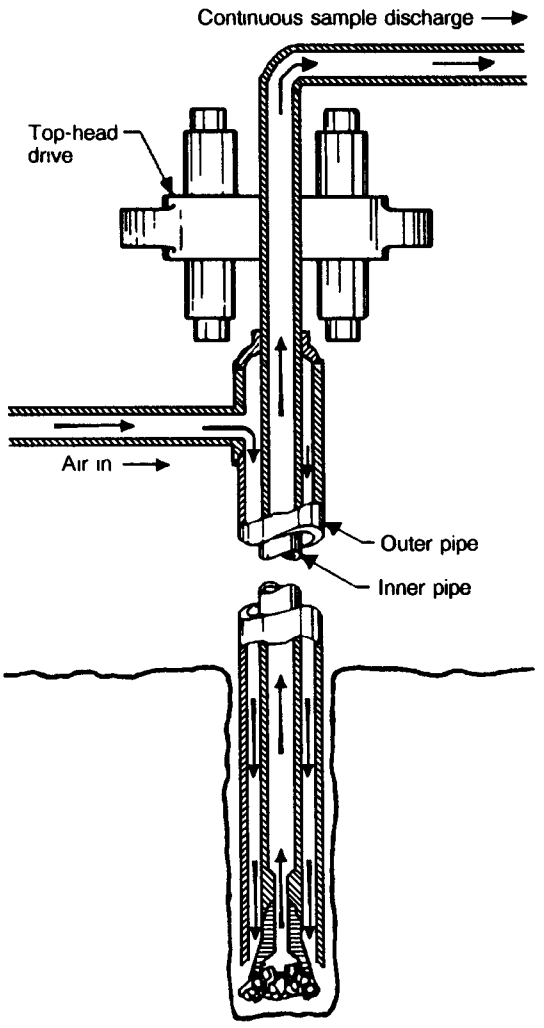

Figure 34. Diagram of dual-wall reverse-circulation rotary method (Driscoll, 1986).

channel just above the hammer. When drilling with the hammer, the full length of the hammer is exposed below the protective outer casing (approximately 4 to 5 feet). Thus the uncased portion of the borehole is somewhat longer than when drilling with a tri-cone bit. This longer uncased interval results in formation samples that are potentially representative of a thicker section of the formation. Otherwise, the sampling and representative quality of the cuttings are very similar to that of a formation drilled with a tri-cone bit. This method was developed for and has been used extensively by minerals exploration companies and has only recently been used for the installation of monitoring wells. Depths in excess of 1000 feet can be achieved in many formations.

When drilling with air, oil or other impurities in the air can be introduced into the formation. Therefore, when drilling with air and a roller-cone bit, an in-line filter must be used to remove oil or other impurities from the airstream. However, when using a down-the-hole hammer, oil is required in the airstream to lubricate the hammer. If oil or other air-introduced contaminants are of concern, the use of a down-the-hole hammer may not be advised.

When the borehole has been advanced to the desired monitoring depth, the monitoring well can be installed by either: 1) inserting a small diameter casing and well intake through an open-mouth bit (Driscoll, 1986) or 2) removing the outer casing prior to the installation of the monitoring well and installing the monitoring well in the open borehole. When installing a casing through the bit, the maximum diameter casing that can be installed is approximately 4 inches. This is controlled by the 10-inch maximum borehole size that is readily available with existing drill pipe and the maximum diameter opening in the bit. When installing a casing in the open borehole, the borehole must be very stable to permit the open-hole completion.

Table 13. Applications and Limitations of Air Rotary with Casing Driver Drilling

Applications	Limitations
• Rapid drilling of unconsolidated sands, silts and clays • Drilling in alluvial material (including boulder formations) • Casing supports borehole thereby maintaining borehole integrity and minimizing inter-aquifer cross contamination • Eliminates circulation problems common with direct mud rotary method • Good formation samples • Minimal formation damage as casing pulled back (smearing of clays and sits can be anticipated)	• Thin, low pressure waterbearing zones easily overlooked if drilling not stopped at appropriate places to observe whether or not water levels are recovering • Samples pulverized as in all rotary drilling • Air may modify chemical or biological conditions. Recovery time is uncertain

A more complete list of applications and limitations of the dual-wall reverse-circulation technique is found in Table 14.

Cable Tool Drilling

Cable tool drilling is the oldest of all the available modern drilling technologies. Prior to the development of direct mud rotary, it was the standard technology used for almost all forms of drilling.

In cable tool drilling, the drill bit is attached to the lower portion of the weighted drill stem that, in turn, is attached by means of a rope socket to the rope or cable (Figure 35). The cable and drill stem are suspended from the mast of the drill rig through a pulley. The cable runs through another pulley that is attached to an eccentric "walking or spudding beam." The walking beam is actuated by the engine of the drilling rig. As the walking beam moves up and down, the bit is alternately raised and dropped. This "spudding action" can successfully penetrate all types of geological formations.

When drilling in hard rock formations, the bit pounds a hole into the rock by grinding cuttings from the formation. The cuttings are periodically excavated from the borehole by removing the drill bit and inserting a bailer (Figure 36). The bailer is a bucket made from sections of thin-wall pipe with a valve on the bottom that is actuated by the weight of the bailer. The bailer is run into the borehole on a separate line. The bailer will not function unless there is sufficient water in the borehole to slurry the mixture of cuttings in water. If enough water is present the bailer picks up the cuttings through the valve on the bottom of the bailer and is hoisted to the surface. The cuttings are discharged from either the top or bottom of the bailer, and a sample of the cuttings can be collected. If the cuttings are not removed from the borehole, the bit is constantly redrilling the same material, and the drilling effort becomes very inefficient.

When drilling unconsolidated deposits comprised primarily of silt and clay, the drilling action is very similar to that described in the previous paragraph. Water must be added to the borehole if the formations encountered during drilling do not produce a sufficient quantity of water to slurry the mud and silt. If the borehole is not stable, casing must be driven as the bit advances to maintain the wall of the borehole.

When drilling unconsolidated deposits comprised primarily of water-bearing sands and gravels, an alternate and more effective drilling technique is available for cable tool operations. In the "drive and bail" technique, casing is driven into the sand and gravel approximately 3 to 5 feet and the bailer is used to bail the cuttings from within the casing. These cuttings provide excellent formation samples because the casing serves, in effect, as a large thin-wall sampler. Although the sample is "disturbed," the sample is representative because the bailer has the capability of picking up all sizes of particles within the formation.

When drilling by the drive and bail technique, "heaving" of material from the bottom of the casing upward may present a problem. When heaving occurs, samples are not representative of the material penetrated by the casing. Instead, samples represent a mixture of materials from the zone immediately beneath the drill pipe. Heaving occurs when the hydrostatic pressure on the outside of the casing exceeds the pressure on the inside of the casing. The heaving is exacerbated by the action of the drill stem that is suspended in the borehole as the pipe is driven and by the action of the bailer that is used to take the samples. If the bailer is lifted or "spudded" rapidly, suction is developed that can pull the material from beneath the casing up into the casing. This problem is particularly prevalent when the drill advances from a dense material into relatively unconsolidated sand and gravel under greater hydrostatic pressure.

Several techniques have been developed to offset the problem of heaving. These techniques include:

1) maintaining the casing full of water as it is driven and as the well is bailed. The column of water in the casing creates a higher hydrostatic head within the casing than is present in the formation;
2) maintaining a "plug" inside the casing as the samples are taken with the bailer. This plug is created by collecting samples with the bailer

Table 14. Applications and Limitations of Dual-Wall Reverse-Circulation Rotary Drilling

Applications	Limitations
• Very rapid drilling through both unconsolidated and consolidated formations • Allows continuous sampling in all types of formations • Very good representative samples can be obtained with minimal risk of contamination of sample and/or water-bearing zone • In stable formations, wells with diameters as large as 6 inches can be installed in open hole completions	• Limited borehole size that limits diameter of monitoring wells • In unstable formations, well diameters are limited to approximately 4 inches • Equipment availability more common in the southwest • Air may modify chemical or biological conditions; recovery time is uncertain • Unable to install filter pack unless completed open hole

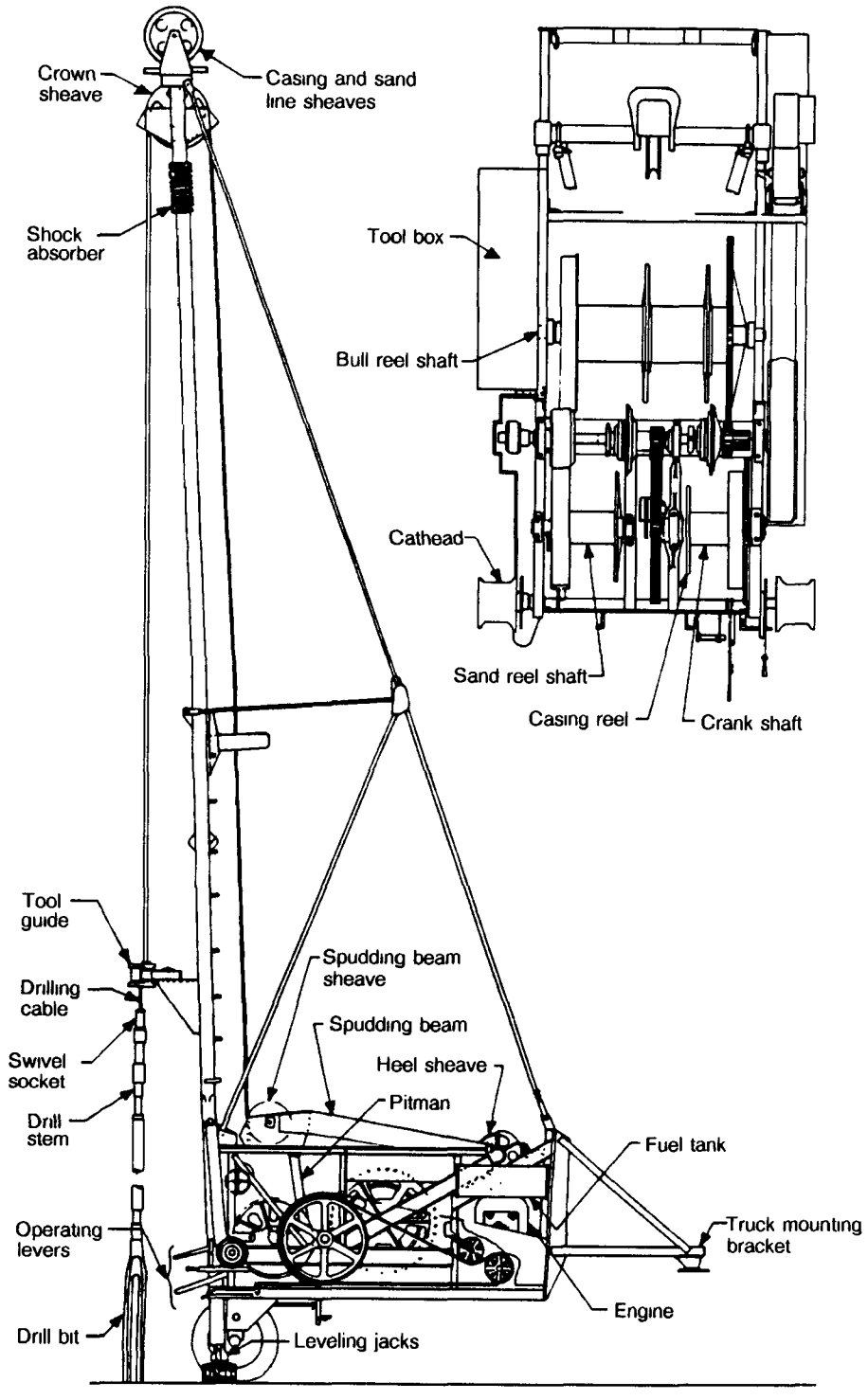

Figure 35. Diagram of a cable tool drilling system (Buckeye Drill Company/Bucyrus-Erie Company, 1982).

between 1 and 3 feet above the bottom of the casing. The plug maintained in the bottom of the "borehole" offsets heaving when the pressure differential is low;

3) overdriving the casing through the zone that has the tendency to heave; and
4) adding drilling mud to the borehole until the weight of the mud and slurried material in the casing exceed the hydrostatic pressure of the heaving zone. This fourth option is the least desirable because it adds drilling mud to the borehole.

If it is necessary to maintain a slurry in the casing in order to control heaving problems, it is still possible to collect both disturbed and undisturbed samples from beneath the casing by inserting smaller-diameter drill rods and samplers inside the casing at selected intervals.

Cable tool drilling has become less prevalent in the last 25 years because the rate of formation penetration is slower than with either rotary techniques in hard consolidated rock or augering techniques in unconsolidated formations. Because cable tool drilling is much slower, it is generally more expensive. Cable tool drilling is still important in monitoring well applications because of the versatility of the method. Cable tool rigs can be used to drill both the hardest and the softest formations. Cable tool rigs can drill boreholes with a diameter suitable to fulfill the needs of a monitoring well or monitoring well network. There is no significant depth limitation for the installation of monitoring wells.

When comparing cable tool to other drilling technologies, cable tool drilling may be the desired method. In a carefully drilled cable tool borehole, thin individual zones and changes in formations are often more easily identified than with alternative technologies. For example, smearing along sidewalls in unconsolidated formations is generally less severe and is thinner than with hollow-stem augering. Therefore, the prospect of a successful completion in a thin water-bearing zone is generally enhanced.

A more complete listing of advantages and disadvantages of cable tool drilling is found in Table 15.

Other Drilling Methods

There are two other drilling techniques that are commonly available to install monitoring wells: 1) bucket auger and 2) reverse circulation rotary. Bucket augers are primarily used for large-diameter borings associated with foundations and building structures. Reverse-circulation rotary is used primarily for the installation of large-diameter deep water wells.

While either of these technologies can be used for the installation of monitoring wells, the diameters of the boreholes and the size of the required equipment normally preclude them from practical monitoring well application. Unless an extraordinarily large diameter monitoring well is being installed, the size of the zone disturbed by the large diameter hole excavated by either of these techniques severely compromises the data acquisition process that is related to the sampling of the monitoring wells. While either of these techniques have possible application to monitoring well installation, they are not considered to be valid for regular application.

Drilling Fluids

Prior to the development of rotary drilling, water and natural clay were added to the borehole during cable tool drilling to: 1) cool and lubricate the bit, 2) slurry the cuttings for bailing and 3) generally assist in the drilling process. With the development of rotary drilling, the use of drilling fluid became increasingly important. In rotary drilling, the drilling fluid: 1) cools and lubricates the bit, 2) removes the cuttings and 3) simultaneously stabilizes the hole. Drilling fluid thus makes it possible to drill to much greater depths much more rapidly. As fluid rotary drilling programs became increasingly sophisticated, it became possible either to temporarily suspend cuttings in the mud column when the mud pump was not operating, or, under appropriate circumstances, to cause the cuttings to drop out in the mud pit when the cuttings reached the surface. These improvements served not only to enhance the efficiency of the drilling operation, but also to improve the reliability of the geologic information provided by the cuttings.

Today, the fluid system used in mud rotary drilling is no longer restricted to the use of water and locally-occurring natural clays. Systems are now available that employ a wide variety of chemical/oil/water-base and water-base fluids with a wide range of physical characteristics created by additives. The predominant additives include sodium bentonite and barium sulfates, but a variety of other chemicals are also used. This drilling fluid technology was initially developed to fulfill the deep-drilling requirements of the petroleum industry and is not generally applied to monitoring well installations.

Influence of Drilling Fluids on Monitoring Well Construction

Monitoring well construction is typically limited to the use of simple water-based drilling fluids. This limitation is imposed by the necessity not to influence the ground-water quality in the area of the well. Even when water-based fluids are used, many problems are still created or exacerbated by the use of drilling fluids. These problems include: 1) fluid infiltration/flushing of the intended monitoring zone, 2) well development difficulties (particularly where an artificial filter pack has been installed) and 3) chemical, biological and physical reactivity of the drilling fluid with the indigenous fluids in the ground.

As drilling fluid is circulated in the borehole during drilling operations, a certain amount of the drilling fluid escapes into the formations being penetrated. The escape, or infiltration into the formation, is particularly pronounced in more permeable zones. Because these more permeable zones are typically of primary interest in the monitoring effort, the most "damage" is inflicted on the zones of greatest concern. If the chemistry of the water in the formation is such that it reacts with the infiltrate, then subsequent samples taken from this zone will not accurately reflect the conditions that are intended to be monitored. Attempts to remove drilling fluids from the formation are made during the well development process. Water is typically removed in sufficient quantities to try to recover all the infiltrate that may have penetrated into the formation. When a sufficient quantity of water has been removed during development, the effects of flushing are arbitrarily considered to be minimized.

Table 15. Applications and Limitations of Cable Tool Drilling

Applications	Limitations
• Drilling in all types of geologic formations	• Drilling relatively slow
• Almost any depth and diameter range	• Heaving of unconsolidated materials must be controlled
• Ease of monitoring well installation	• Equipment availability more common in central, north central and northeast sections of the United States
• Ease and practicality of well development	
• Excellent samples of coarse-grained materials	

Most monitoring wells are typically 2 to 4 inches in diameter. They are frequently surrounded by a filter pack to stabilize the formation and to permit the procurement of good ground-water samples. Because of the small well diameter, it is very difficult, and often not possible, to fully develop the drilling mud from the interface between the outside of the filter pack and the inside of the natural formation. Failure to fully remove this mudcake can interfere with the quality of the samples being obtained for a substantial period of time.

In practice, when ground-water sampling is undertaken, samples are usually collected and analyzed in the field for certain key parameters, including specific conductance, temperature and pH. Water is discharged from the well and repeated measurements are taken until the quality of the water being sampled has stabilized. When this "equilibrium" has been achieved and/or a certain number of casing volumes of water have been removed, the samples collected are commonly considered to be representative of the indigenous quality of the ground water. It is assumed that the drilling fluid filtrate no longer impacts the results of the sample quality. This is not necessarily the case. If, for example, the chemical reactions that took place between the drilling fluid and formation water(s) resulted in the precipitation of some constituents, then the indigenous water moving toward the well can redissolve some of the previously-precipitated constituents and give a false result to the sample. Theoretically, at some point in time this dissolution will be completed and the samples will become valid. However, there is currently no reliable method in practice that postulates the time frame required before reliable quality is attainable.

Biologic activity induced by the introduction of the drilling fluid may have a similar reaction. In particular, the use of organic drilling fluids, such as polymeric additives, has the potential for enhancing biologic activity. Polymeric additives include the natural organic colloids developed from the guar plant that are used for viscosity control during drilling. Biologic activity related to the decomposition of these compounds can cause a long-term variation in the quality of the water sampled from the well.

The use of sodium montmorillonite (bentonite) can also have a deleterious long-term impact on water quality. If the sodium-rich montmorillonite is not fully removed from the well during development, constituents contained in the ground water being monitored will come in contact with the montmorillonite. When this happens, the tendency is for both organic molecules with polar characteristics and inorganic cations to be attracted to positions within the sodium montmorillonite structure. This substitution results in the release of excess sodium ions and the retention of both selected organic molecules and cations. Organic molecules and cations that might otherwise be indicative of contamination can be removed from the sample and possibly be re-dissolved at an undefined rate into subsequent samples.

Drilling Fluid Characteristics

The principal properties of water-based drilling fluids are shown in Table 16. Selected properties are discussed in this section. Monitoring well construction typically starts by using only the simplest drilling fluid- -water; however, water should only be used when necessary. Any water added as a drilling fluid to a monitoring well should be the best quality of water that is available. The chemical and bacteriological quality of this water must be determined by laboratory analyses in order to identify potential interference with substances being monitored. As this "clean" water is circulated in the borehole, the water picks up clay and silt that form a natural drilling mud. During this process, both the weight and viscosity of the drilling fluid increase. The degree of change in these properties depends on the nature of the geologic formations being penetrated. It is possible to attain a maximum weight of approximately 11 pounds per gallon when drilling in natural clays. The same maximum weight can also be achieved by artificially adding natural clays or bentonite to make a heavier drilling mud where the formation does not naturally have these minerals.

Where additional weight is needed to maintain stability of the borehole, heavier additives are required. The most common material used for drilling mud weight control is barite (barium sulfate). Barite has an average specific gravity of approximately 4.25; the specific gravity of typical clay additives approximates 2.65. Figure 37 shows the range of drilling fluid densities that can be obtained by using a variety of different drilling additives.

When the weight of the drilling fluid substantially exceeds the natural hydrostatic pressure exerted by the formation being drilled, there is an excessive amount of water loss from the drilling fluid into the formation penetrated. This maximizes the filtrate invasion and consequently maximizes the adverse impact of filtrate invasion on the reliability of water-quality samples collected from the monitoring well.

Another important property of a drilling fluid is viscosity. Viscosity is the resistance offered by the drilling fluid to flow. In combination with the velocity of the circulated fluid, viscosity controls the ability of the fluid to remove cuttings from the borehole. In monitoring wells where water is the primary drilling fluid, the viscosity is the result of the interaction of water with the particulate matter that is drilled. Viscosity is also affected by the interaction of water with the clays that are sometimes added during the drilling process. Sodium montmorillonite (sodium bentonite) is the constituent most often added to increase viscosity.

Viscosity has no relationship to density. In the field, viscosity is measured by the time required for a known quantity of fluid to flow through an orifice of special dimensions. The instrument used for this measurement is called a Marsh Funnel. The relative viscosity of the drilling mud is described as the Marsh Funnel viscosity, in seconds. Table 17 presents the approximate Marsh Funnel viscosities required for drilling in typical unconsolidated materials. These typical values are based on the assumption that the circulating mud pump provides an adequate uphole velocity to clean the cuttings from the borehole at these viscosities. For comparison, the Marsh Funnel viscosity of clear water at 70°F is 26 seconds.

Table 16. Principal Properties of Water-Based Drilling Fluids (Driscoll, 1986)

Density (weight)	Gel strength
Viscosity	Fluid-loss-control effectiveness
Yield point	Lubricity (lubrication capacity)

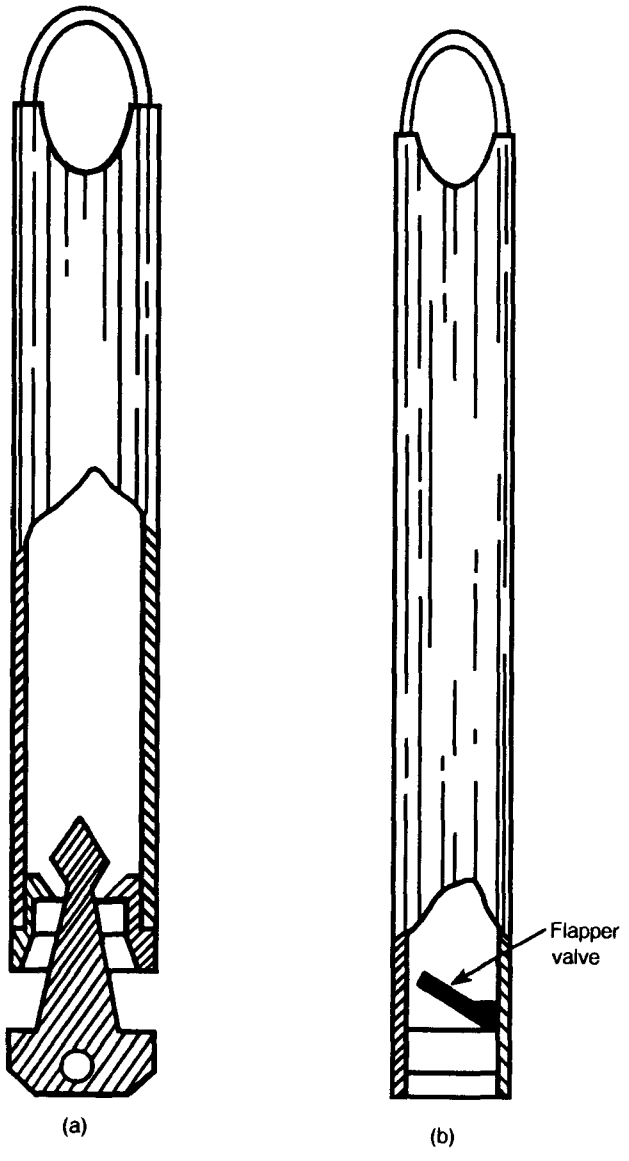

Figure 36. Diagrams of two types of bailers: a) dart valve and b) flat bottom.

Table 17. Approximate Marsh Funnel Viscosities Required for Drilling in Typical Types of Unconsolidated Materials (Driscoll, 1986)

Material Drilled	Appropriate Marsh Funnel Viscosity (seconds)
Fine sand	35 - 45
Medium sand	45 - 55
Coarse sand	55 - 65
Gravel	65 - 75
Coarse gravel	75 - 85

Clays are frequently a mixture of illite, chlorite, kaolinite and mixed-layer clays. These minerals all have a relatively low capability to expand when saturated. The reason that sodium montmorillonite is so effective in increasing viscosity is because of its crystalline layered structure; its bonding characteristics; and the ease of hydration of the sodium cation. Figure 38 demonstrates the variation in the viscosity building characteristics of a variety of clays. Wyoming bentonite (a natural sodium-rich montmorillonite) is shown at the extreme left.

The impact of the mix water on sodium bentonite is indicated by Figure 39. This figure shows the viscosity variation that results from using soft water versus hard water in drilling mud preparation. Sodium montmorillonite is most commonly used as the viscosity-building clay. However, in hard water the calcium and magnesium ions replace the sodium cation in the montmorillonite structure. As a consequence, a much lower viscosity is obtained for a given quantity of solids added. As previously discussed, this sodium cation replacement is similar to the activity that occurs in the subsurface when bentonitic materials are left in the proximity of the well. These materials have the capacity to prevent ions from reaching the borehole and to release them slowly back into the ground water at an indeterminate rate. This process can have a profound influence on the quality of the ground-water samples collected from the monitoring well.

The loss of fluid from the borehole into permeable zones during drilling occurs because the hydrostatic pressure in the borehole exceeds that of the formation being penetrated. As fluid moves from the borehole into the lower pressure zones, fine particulate matter that has been incorporated during the drilling operation, plus any clay additives that have been added to the drilling fluid, are deposited in the pore space of the zone being infiltrated. When this happens, a "filter cake" is formed on the borehole wall. Where a good quality bentonitic drilling mud additive is being used, this filter cake can be highly impermeable and quite tough. These characteristics minimize filtrate invasion into the formation, but make it difficult to develop these clays out of the zone penetrated.

Yield point and gel strength are two additional properties that are considered in evaluating the characteristics of drilling mud. Yield point is a measure of the amount of pressure, after a shut down, that must be exerted by the pump upon restarting, in order to cause the drilling fluid to start to flow. Gel strength is a measure of capability of the drilling fluid to maintain suspension of particulate matter in the mud column when the pump is shut down. There is a close relationship between viscosity, yield point and gel strength. In monitoring well installation these properties are rarely controlled because the control of these properties requires the addition of additives that can impact the quality of the water produced by the completed well. They are important, however, in evaluating the reliability of samples taken from the mud stream. Where drilling fluid quality is uncontrolled, ditch samples are generally unreliable.

Mud-Based Applications

It is desirable to install monitoring wells with the cleanest, clearest drilling water that is available. In monitoring well applications, the properties related to mud weight and the properties that relate to flow characteristics are only controlled under exceptional conditions. This control is usually exercised only on relatively deep boreholes or boreholes with moderately large diameters.

When drilling using either cable tool or hollow-stem augering techniques, it is sometimes necessary to add water to the borehole in order to effectively continue drilling. The addition of water may be required to: 1) stabilize the borehole, 2) improve the cutting action of the bit or 3) enable the driller to remove the cuttings from the borehole. With drive-and-bail and hollow-stem auger techniques, it may be necessary to add

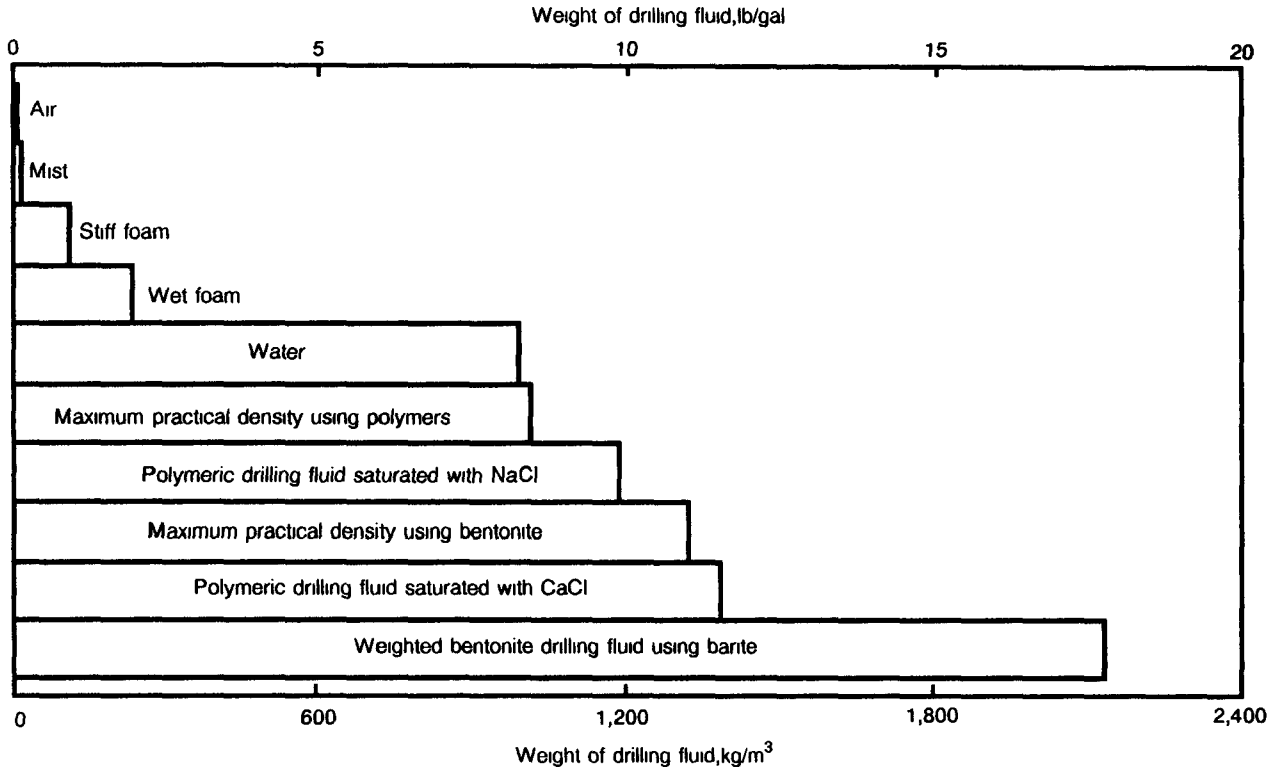

Figure 37. Practical drilling fluid densities (Driscoll, 1986).

water to the borehole to minimize heaving of the formation upward into the casing or hollow stem. When the zone immediately below the augers or the casing heaves, the samples collected from this zone are considered disturbed and are not representative of the natural undisturbed formation.

When drilling fluid is added during either cable tool drilling or hollow-stem augering, the effectiveness of the water is enhanced by the addition of bentonite to the drilling fluid. The bentonite is added to the borehole for formation stabilization. When either clean water or clean water plus additives are added to the borehole, the problems of flushing, potential contamination and water-quality modification are the same as when using fluid rotary drilling. For these reasons, it is suggested that addition of drilling fluid additives and/or even clean water be avoided when using cable tool or hollow-stem augers if at all possible. If it is anticipated that the addition of fluids will be necessary to drill with either cable tool or hollow-stem augers, it is suggested that alternative drilling techniques be considered.

Air-Based Applications

In addition to water-based drilling fluids, air-based drilling fluids are also used. There are a variety of air-based systems as indicated in Table 18. When using air-based drilling fluids, the same restrictions apply as when using water-based drilling fluids. When a monitoring well is drilled using additives other than dry air, flushing, potential contamination and water-quality modification are all of concern. Even with the use of dry air, there is the possibility that modification of the chemical environment surrounding the borehole may occur due to changes in the oxidation/reduction potential induced by aeration. This may cause stripping of volatile organics from formation samples and ground water in the vicinity of the borehole. With time, this effect will diminish and disappear, but the time necessary for this to occur varies with the hydrogeologic conditions.

Table 18. Drilling Fluid Options when Drilling with Air (after Driscoll, 1986)

- Air Alone
- Air Mist
  - Air plus a small amount of water/perhaps a small amount of surfactant
- Air Foam
  - Stable foam - air plus surfactant
  - Stiff foam - air, surfactant plus polymer or bentonite
- Aerated mud/water base - drilling fluid plus air

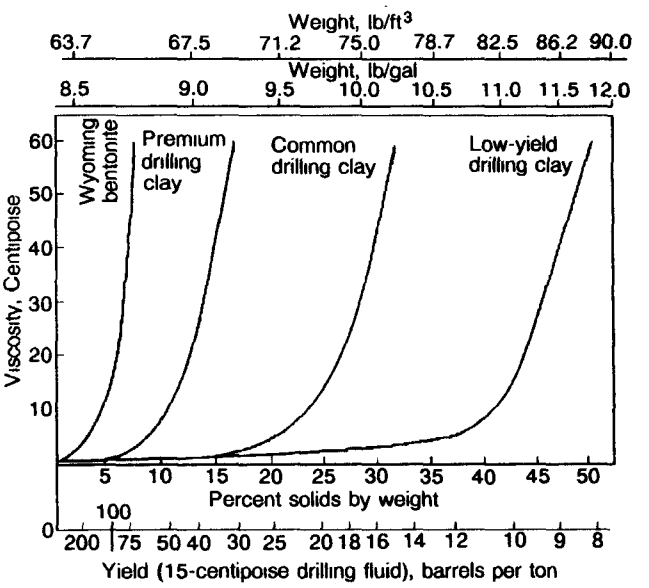

Figure 38. Viscosity-building characteristics of drilling clays (after Petroleum Extension Service, 1980).

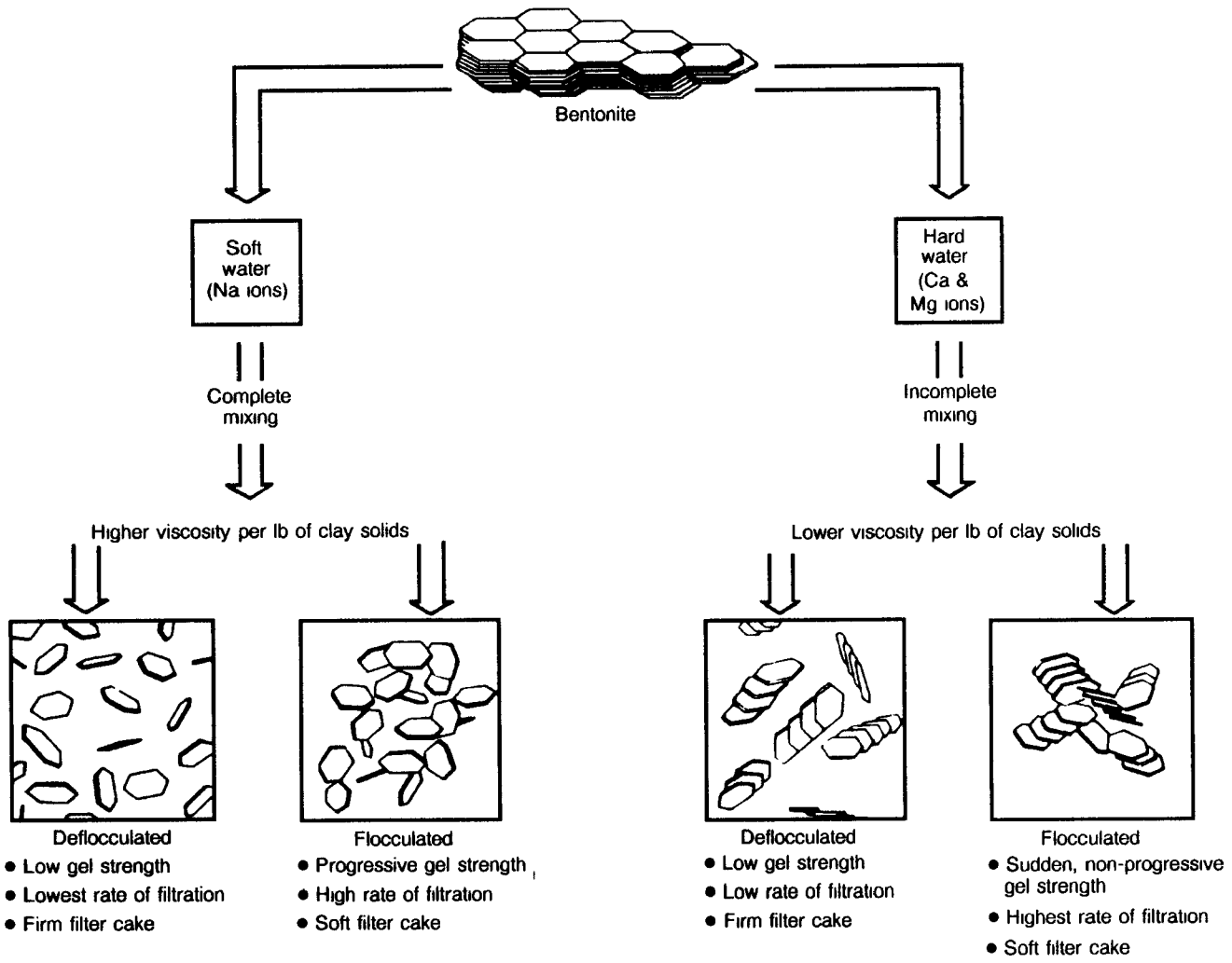

Figure 39. Schematic of the behavior of clay particles when mixed into water (Driscoll, 1986).

Where dry air is being used, a filter must be placed in the discharge line to remove lubricating oil. Because a down-the-hole hammer cannot be used without the presence of oil in the air stream, this particular variety of dry-air drilling cannot be used without the danger of contaminating the formation with lubricating oil.

Monitoring wells can be installed in hard rock formations using air as the circulation medium and employing roller-cone bits. Air can also be used successfully in unconsolidated formations when applied in conjunction with a casing hammer or a dual-wall casing technique. For effective drilling, the air supply must be sufficient to lift the cuttings from the bottom of the borehole, up through the annular space and to the discharge point at the surface. An uphole velocity of 5000 to 7000 feet per minute is desirable for deep boreholes drilled at high penetration rates.

Soil Sampling and Rock Coring Methods

It is axiomatic that: "any sample is better than no sample; and no sample is ever good enough." Thus, if there are no samples except those collected from the discharge of a direct rotary fluid drilled hole or those scraped from the cutting head or lead auger of a solid core auger, then these samples will be collected and analyzed to the best of the ability of the person supervising the operation. In general, however, it can be stated that in a monitoring well installation program these types of samples are not sufficient.

When evaluating the efficiency of a sampling program, the objectives must be kept in mind. Where formation boundaries must be identified in order to establish screened intervals, continuous samples are important. If identification of isolated zones with thin interfingers of sand and gravel in a clay matrix is important for the monitoring program, then the samples must allow identification of discrete zones within the interval being penetrated. If laboratory tests will be performed on the samples, then the samples must be of sufficient quality and quantity for laboratory testing. Specific laboratory tests require that samples be undisturbed; other tests permit the use of disturbed samples. The sample program must take these requirements into account.

Table 19 demonstrates the characteristics of the sampling methods available for the drilling techniques that are most

Table 19. Characteristics of Common Formation-Sampling Methods

Type of Formation	Sample Collection Method	Sample Quality	Potential for Continuous Sample Collection	Samples Suitable for Lab Tests	Discrete Zones Identifiable	Increasing Reliability
Unconsolidated						
	Solid core auger	Poor	No	No	No	
	Ditch (direct rotary)	Poor	Yes	No	No	
	Air rotary with casing driver	Fair	Yes	No	Yes	
	Dual-wall reverse circulation rotary	Good	Yes	No	Yes	
	Piston samplers	Good	No	Yes	Yes	
	Split spoon and thin-wall samplers	Good	Yes	Yes	Yes	
	Special samplers (Dennison, Vicksburg)	Good	Yes	Yes	Yes	
	Cores	Good	Yes	Yes	Yes	
Consolidated						
	Ditch (direct rotary)	Poor	Yes	No	No	
	Surface (dry air)	Poor	Yes	No	Yes	
	Surface (water/foam)	Fair	Yes	No	Yes	
	Cores (wireline or conventional)	Good	Yes	Yes	Yes	

frequently employed in the installation of monitoring wells. The table is arranged such that the general overall reliability of the samples increases downward in the table for both unconsolidated and consolidated materials. The least favorable type of sampling is the scraping of samples from the outside of the flights of solid-flight augers. This sampling method: 1) permits only discontinuous sampling, 2) does not allow identification of discrete zones, 3) provides no sample suitable for laboratory testing and 4) generally provides unreliable sample quality. It can also be seen from Table 19 that split-spoon and thin-wall sampling techniques are the minimum techniques required to obtain: 1) good sample quality, 2) continuous sampling, 3) samples suitable for laboratory testing and 4) samples that allow the identification of discrete zones.

Split-spoon sampling has become the standard for obtaining samples in unconsolidated materials by which other techniques are compared. Split-spoon samples are "driven" to collect disturbed samples; thin-wall samples are "pressed" to collect undisturbed samples. Undisturbed samples cannot be taken using driving, rotational or vibratory techniques in unconsolidated materials. Split-spoon and thin-wall sampling techniques are the primary techniques that are used to obtain data for monitoring well installation.

Sample description is as important as sample collection. It is often difficult to collect good formation samples of non-cohesive materials because the fine, non-cohesive particles are frequently lost during the sampling process. The person using and describing such sampling data must make an on-site, sample-by-sample determination of sample reliability if the data are to be used in a meaningful manner. Another sampling bias is that particulate material with an effective diameter greater than one-third of the inside diameter of the sampler frequently cannot be collected. It is not unusual for a single large gravel or small cobble to be caught at the bottom of the sampler and no sample at all recovered from a sampler run. It is also possible in a sequence of alternating saturated clay/silt and sand to "plug" the sampler with the clay/silt materials and to drive through the sands without any indication of sand. It is also common for the sample to be compacted so that if a 2-foot sampler is driven completely into the sediments, only 1.5 feet or less may actually be recovered.

It must be stressed that regardless of the sampling equipment used, the final results frequently depend on the subjective judgment of the person describing the samples. Therefore, in order to properly screen and develop a well in a potentially contaminated zone, it is often necessary to employ auxiliary techniques and substantial experience.

Split-Spoon Samplers

Split-spoon sampling techniques were developed to meet the requirements of foundation engineering. The common practice in foundation evaluation is to collect 18-inch samples at 5-foot intervals as the borehole is advanced. The split-spoon sampler is attached to the end of the drill rods and lowered to the bottom of the borehole where it rests on top of fresh undisturbed formation. In order to obtain valid samples, the bottom of the borehole must be clean and the formation to be sampled must be fresh and undisturbed. It is, therefore, easy to see why: 1) the difficulties of a heaving formation must be overcome prior to sampling and 2) a good sampling program can only be conducted in a stabilized borehole.

A split-spoon sampler, as shown in Figure 40, is of standard dimensions and is driven by a 140-pound weight dropped through a 30-inch interval. The procedure for collecting split-spoon samples and the standard dimensions for samplers are described in ASTM D1586 (American Society for Testing and Materials, 1984). The number of blows required to drive the split-spoon sampler provides an indication of the compaction/density of the soils being sampled. Because only 18-inch intervals are sampled out of every 5 feet penetrated, drilling characteristics (i.e. rate of penetration, vibrations, stability, etc.) of the formation being penetrated are also used to infer

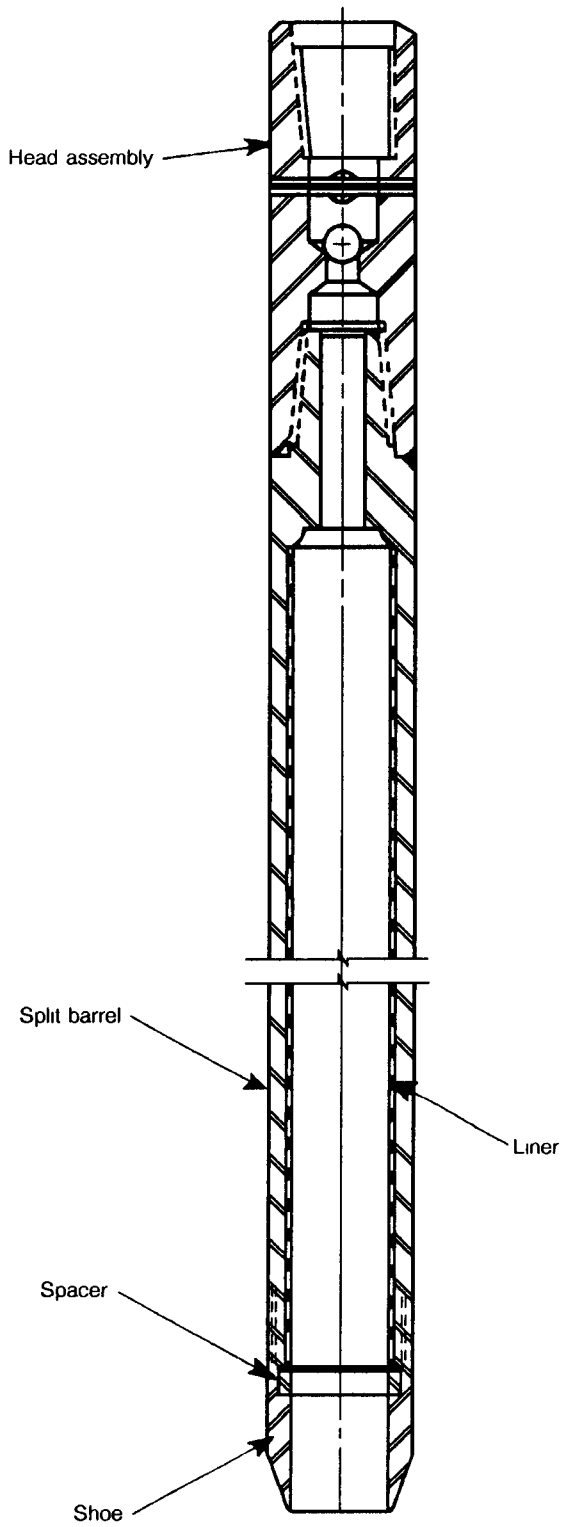

Figure 40. Diagram of a split-spoon sampler (Mobile Drilling Company, 1982).

characteristics of unsampled material. "Continuous" samples can also be taken with the split-spoon method by augering or drilling to the bottom of the previously-sampled interval and continuously repeating the operation. In order to obtain more accurate "N" values, a better approach is to attempt to collect two samples every five feet. This minimizes collection of samples in the disturbed zone in front of the bit. Continuous sampling is more time consuming, but is often the best way to obtain good stratigraphic data in unconsolidated sediments.

Table 20 shows the penetration characteristics of a variety of unconsolidated materials. The samples collected by split-spoon sampler are considered to be "disturbed" samples. They are, therefore, unsuitable for running certain laboratory tests, such as permeability.

Table 20. Standard Penetration Test Correlation Chart (After Acker, 1974)

Soil Type	Designation	Blows/Foot*
Sand and Silt	Loose	0-10
	Medium	11-30
	Dense	31-50
	Very Dense	>50
Clay	Very Soft	< 2
	Soft	3-5
	Medium	6-15
	Stiff	1-25
	Hard	>25

*Assumes: a) 2-inch outside diameter by 1 3/8-inch inside diameter sampler
b) 140-pound hammer falling through 30 inches

Thin-Wall Samplers

Work performed by Hvorslev (1949) and others have shown that if relatively undisturbed samples are to be obtained, it is imperative that the thickness of the wall of the sampling tube be less than 2.5 percent of the total outside diameter of the sampling tube. In addition, the ratio of the total area of the sampler outside diameter to the wall thickness area (area ratio) should be as small as possible. An area ratio of approximately 10 percent is the maximum acceptable ratio for thin-wall samplers; hence, the designation "thin-wall" samplers. Because the split-spoon sampler must be driven to collect samples, the wall thickness of the sampler must be structurally sufficient to withstand the driving forces. Therefore, the wall thickness of a split spoon sampler is too great for the collection of undisturbed samples.

The standard practice for collecting thin-wall samples, commonly referred to as Shelby tube samples, requires placing the thin-wall sampling tube at the end of the sampling drill rods. The sampler and rods are lowered to the bottom of the borehole just as is done with the split-spoon sampler. Instead of driving the sampler into the ground, the weight of the drill rig is placed on the sampler and it is pressed into place. This sampling procedure is described in detail in ASTM D1587 (American Society for Testing and Materials, 1983). A typical thin-wall sampler is shown in Figure 41.

The requirement that the area ratio be as small as possible presents a serious limitation on obtaining undisturbed samples in compact sediments. A thin-wall sampler may not have sufficient structural strength to penetrate these materials. A standard 2-inch inside diameter thin-wall sampler will frequently collapse without satisfactorily collecting a sample in soils with "N" values of 30 or greater. "N" values are a standard method of comparing relative density as derived from blow counts and are explained in ASTM D1586 (American Society for Testing and Materials, 1984).

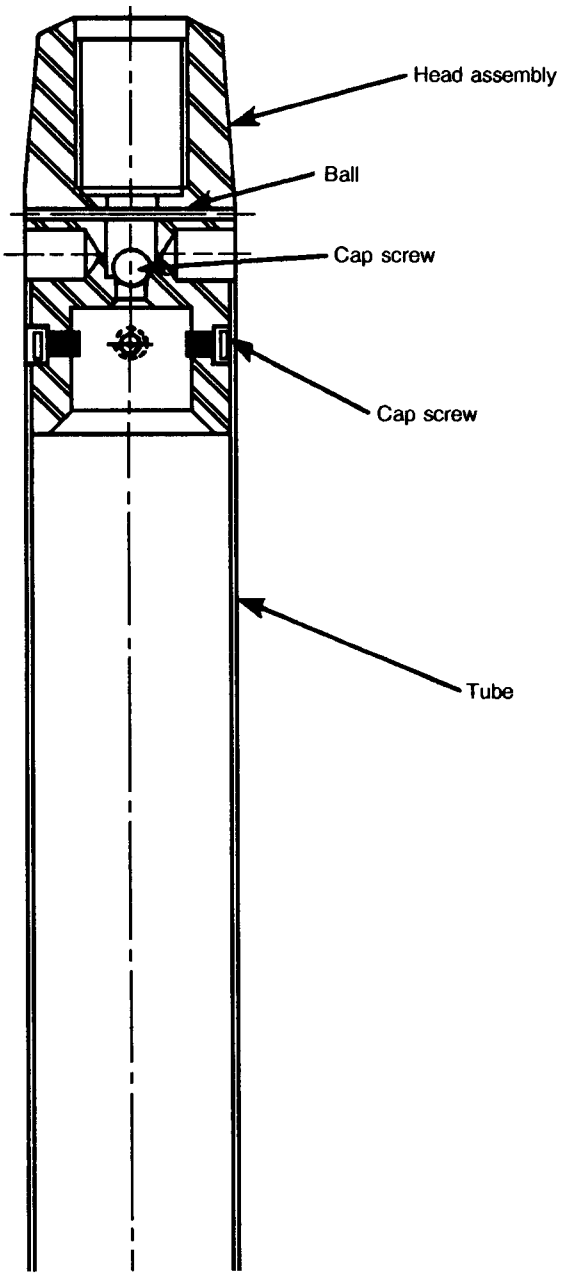

Figure 41. Diagram of a thin-wall sampler (Acker Drill Company, Inc., 1985).

Specialized Soil Samplers

Many special-function samplers have been developed to deal with special conditions. These include: 1) structurally strong thin-wall samplers that collect "undisturbed" samples, 2) large-diameter samplers that collect coarse sand and gravel for gradation analyses and 3) piston samplers that collect samples in heaving sands. Two good examples of the reinforced-type design are the Vicksburg sampler and the Dennison sampler, as shown in Figures 42a and 42b. Both samplers were developed by the United States Army Corps of Engineers and are so named for the districts in which they were first developed and used. The Vicksburg sampler is a 5.05-inch inside diameter by 5.25-inch outside diameter sampler that qualifies as a thin-wall sampler but is structurally much stronger than a Shelby tube. The Dennison sampler is a double-tube core design with a thin inner tube that qualifies as a thin-wall sampler. The outer tube permits penetration in extremely stiff deposits or highly cemented unconsolidated materials while the inner tube collects a thin-wall sample.

Examples of piston samplers are the internal sleeve piston sampler developed by Zapico et al. (1987) and the wireline piston sampler described by Leach et al. (1988) (Figures 43 and 44). Both samplers have been designed to be used with a hinged "clam-shell" device on the cutting head of a hollow-stem auger (Figure 45). The clam shell has been used in an attempt to: 1) improve upon a non-retrievable knock-out plug technique, 2) simplify sample retrieval and 3) increase the reliability of the sampling procedure in heaving sand situations. The Zapico et al. (1987) device requires the use of water or drilling mud for hydrostatic control while the Leach et al. (1988) device permits the collection of the sample without the introduction of any external fluid. The limitation of using this technique is that only one sample per borehole can be collected because the clam shell device will not close after the sampler is inserted through the opening. This means that although sample reliability is good, the cost per sample is high.

In both split-spoon and thin-wall sampling, it is common for a portion of the sample to be lost during the sampling process. One of the items to be noted in the sample description is the percent recovery, or the number of inches that are actually recovered of the total length that was driven or pressed. To help retain fine sand and gravel and to prevent the sample from being lost back into the borehole as the sample is removed, a "basket" or a "retainer" is placed inside the split-spoon sampler. Figure 46 shows the configuration of four commercially-available types of sample retainers. A check valve is also usually installed above the sampler to relieve hydrostatic pressing during sample collection and to prevent backflow and consequent washing during withdrawal of the sampler.

Except for loss of sample during collection, it is possible to collect continuous samples with conventional split-spoon or thin-wall techniques. These involve: 1) collecting a sample, 2) removing the sampler from the borehole, 3) drilling the sampled interval, 4) reinserting the sampler and 5) repeating the process. This effort is time consuming and relatively expensive, and it becomes increasingly expensive in lost time to remove and reinsert the sampler and rods as the depths exceed 100 feet.

To overcome this repeated effort, continuous samplers have been developed. One such system is shown in Figure 47. A continuous sample is taken by attaching a 5-foot long thin-wall tube in advance of the cutting head of the hollow-stem auger. The tube is held in place by a specially designed latching mechanism that permits the sample to be retracted by wire line when full and replaced with a new tube. A ball-bearing fitting in the latching mechanism permits the auger flights to be rotated without rotation of the sampling tube. Therefore, the sampling tube is forced downward into the ground as the augers are rotated.

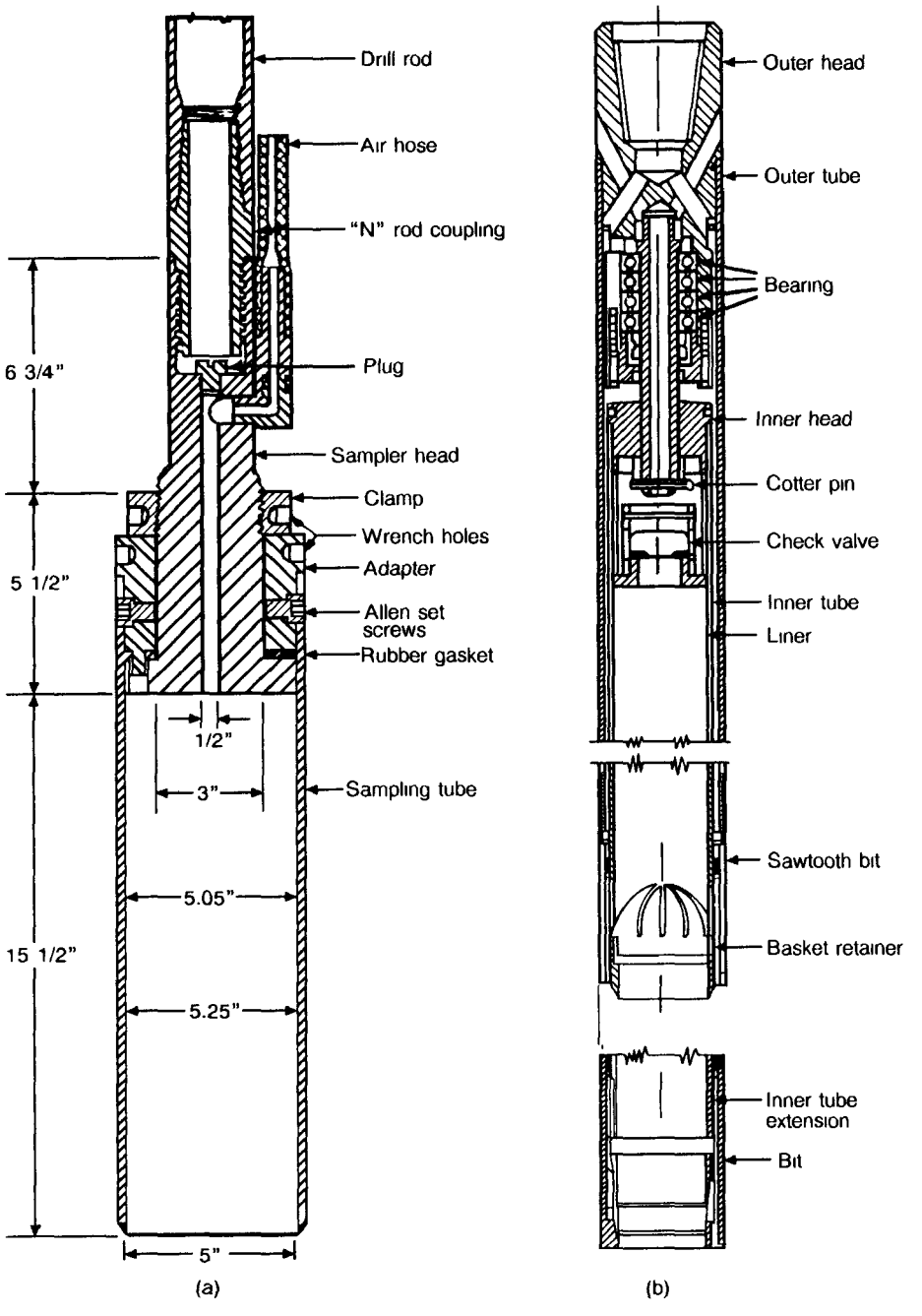

Figure 42. Two types of special soil samplers: a) Vicksburg sampler (Krynine and Judd, 1957) and b) Dennison sampler (Acker Drill Company, Inc., 1985).

Core Barrels

When installing monitoring wells in consolidated formations the reliability and overall sample quality of the drilled samples from either direct fluid rotary or air, water and foam systems is very similar to that of the samples obtained in unconsolidated formations. Where reliable samples are needed to fully characterize the monitored zone, it is suggested that cores be taken. Coring can be conducted by either wireline or conventional methods. Both single and double-tube core barrels are available as illustrated in Figures 48a and 48b.

In coring, the carbide or diamond-tipped bit is attached to the lower end of the core barrel. As the bit cuts deeper, the formation sample moves up the inside of the core tube. In the single-wall tube, drilling fluid circulates downward around the core that has been cut, flows between the core and the core barrel and exits through the bit. The drilling fluid then circulates up the annular space and is discharged at the land surface. Because the drilling fluid is directly in contact with the core, poorly-cemented or soft material is frequently eroded and the core may be partially or totally destroyed. This problem exists where formations are friable, erodable, soluble or highly frac-

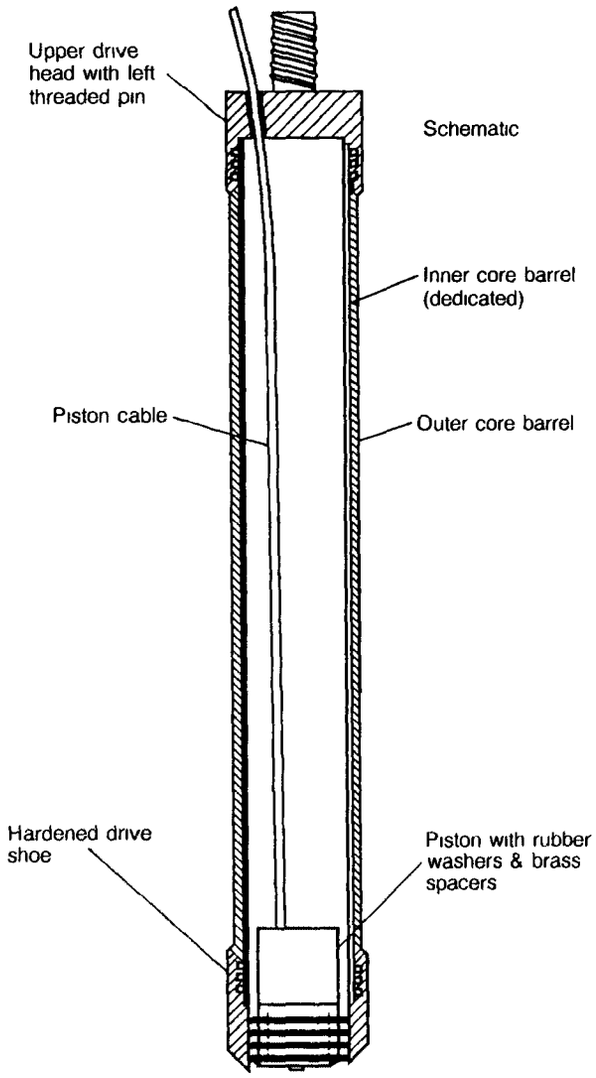

Figure 43. Internal sleeve wireline piston sampler (Zapico et al., 1987).

tured. In these formations very little or no core may be recovered.

In these circumstances a double-wall core barrel may be necessary. In a double-wall core barrel, the drilling fluid is circulated between the two walls of the core barrel and does not directly contact the core that has been cut. As drilling fluid circulates between the two walls of the core barrel, the core moves up into the inner tube, where it is protected. As a result, better cores of poorly-consolidated formations can be recovered. Good recovery can be obtained even in unconsolidated clays and silts using a double-wall coring technique.

Selection of Drilling Methods for Monitoring Well Installation

Matrix Purpose

The most appropriate drilling technology for use at a specific site can only be determined by evaluating both the hydrogeologic setting and the objectives of the monitoring program. To assist the user in choosing an appropriate drilling technology, a set of matrices has been developed that lists the most commonly used drilling techniques for monitoring well installation and delineates the principal criteria for evaluating those drilling methods. A matrix has been developed for a unique set of hydrogeologic conditions and well design requirements that limit the applicability of the drilling techniques. Each applicable drilling method that can be used in the described hydrogeologic setting and with the stated specific design requirements has been evaluated on a scale of 1 to 10 with respect to the criteria listed in the matrix. A total number for each drilling method was computed by adding the scores for the various criteria. The totals represent a relative indication of the desirability of the drilling methods for the specified conditions.

Matrix Description and Development

A set of 40 matrices has been developed to depict the most prevalent general hydrogeologic conditions and well design requirements for monitoring wells. The complete set of matrices are included as Appendix B. The matrices were developed from a combination of five factors including:

1) unconsolidated or consolidated geologic formations encountered during drilling,
2) saturated or unsaturated conditions encountered during drilling,
3) whether or not invasion of the monitored zone by drilling fluid is permitted,
4) depth range of the monitoring well: 0 to 15 feet, 15 to 150 feet or greater than 150 feet and
5) casing diameter of the monitoring well: less than 2 inches, 2 to 4 inches or 4 to 8 inches.

Table 21 indicates the number of the matrix that corresponds to the combination of factors used to develop the numbers on each matrix.

Each matrix provides a relative evaluation of the applicability of selected drilling methods commonly used to construct monitoring wells. The drilling methods evaluated in the matrix include:

1) hand auger,
2) driving,
3) jet percussion,
4) solid flight auger,
5) hollow stem auger,
6) mud rotary,
7) air rotary,
8) air rotary with casing driver,
9) dual-wall rotary and
10) cable tool.

A complete description of these drilling techniques and their applicability to monitoring well installations can be found in the beginning of this chapter under the heading entitled "Drilling Methods for Monitoring Well Installation."

The drilling techniques have been evaluated with respect to a set of criteria that also influences the choice of a drilling method. These additional criteria include:

1) versatility of the drilling method,
2) sample reliability,

Table 21. Index to Matrices 1 through 40

Matrix Number / General Hydrogeologic Conditions and Well Design Requirements	Unconsolidated	Consolidated	Saturated	Unsaturated	Invasion Permitted	Invasion Prohibited	Depth 0-15 Feet	Depth 15-150 Feet	Depth > 150 Feet	<2-Inch Diameter Casing	2-4 Inch Diameter Casing	4-8 Inch Diameter Casing
1	X		X		X		X			X		
2	X		X		X			X		X		
3	X		X		X				X	X		
4	X		X		X		X				X	
5	X		X		X			X			X	
6	X		X		X				X		X	
7	X		X		X		X					X
8	X		X		X			X				X
9	X		X		X				X			X
10	X		X			X	X			X		
11	X		X			X		X		X		
12	X		X			X			X	X		
13	X		X			X	X				X	
14	X		X			X		X			X	
15	X		X			X			X		X	
16	X		X			X	X					X
17	X		X			X		X				X
18	X		X			X			X			X
19	X			X	X		X			X		
20	X			X	X			X		X		
21	X			X	X				X	X		
22	X			X	X		X				X	
23	X			X	X			X			X	
24	X			X	X						X	
25	X			X	X				X			X
26	X			X	X		X					X
27	X			X	X			X				X
28	X			X		X			X	X		
29	X			X		X	X			X		
30	X			X		X		X		X		
31	X			X		X			X		X	
32	X			X		X	X				X	
33	X			X		X		X			X	
34	X			X		X			X			X
35	X			X		X	X					X
36	X			X	X	X		X				X
37		X			X				X		X	
38		X										X
39		X				X					X	
40		X				X						X

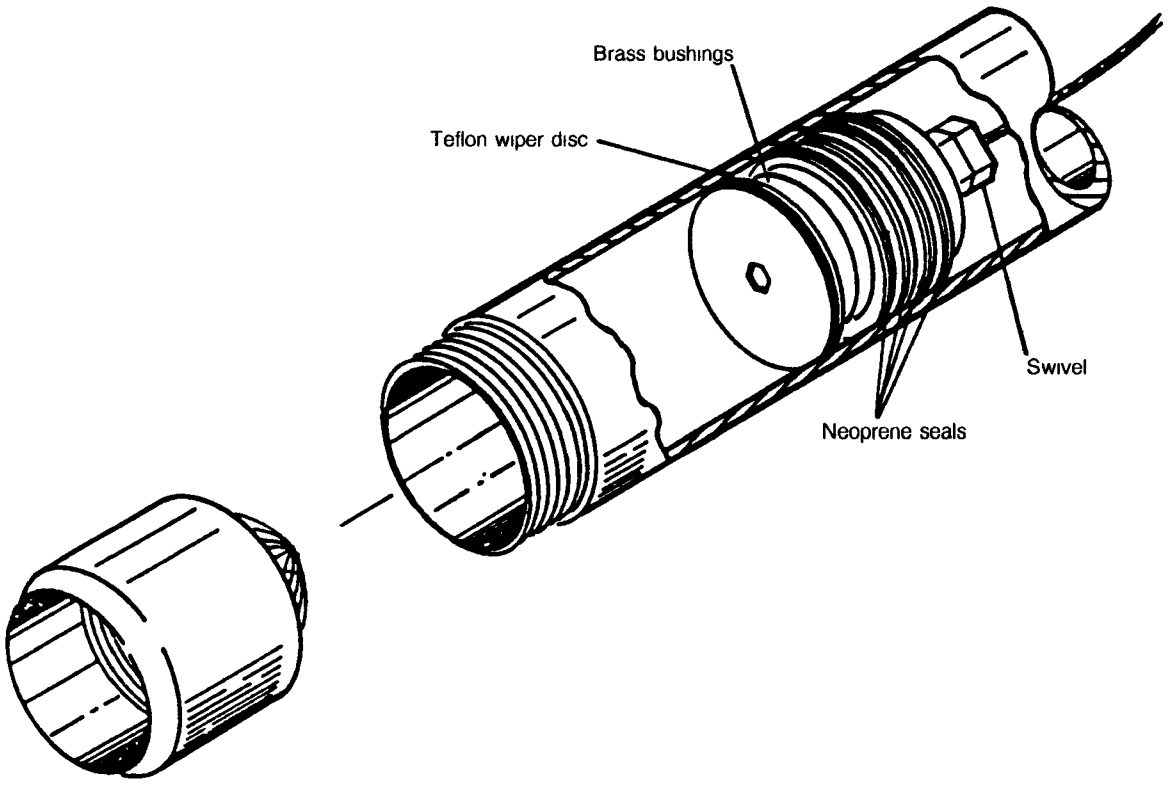

Figure 44. Modified wireline piston sampler (Leach et al., 1988).

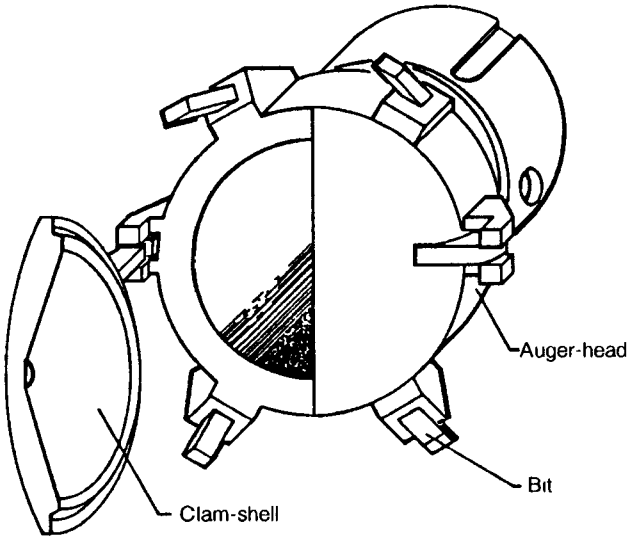

Figure 45. Clam-shell fitted auger head (Leach et al., 1988).

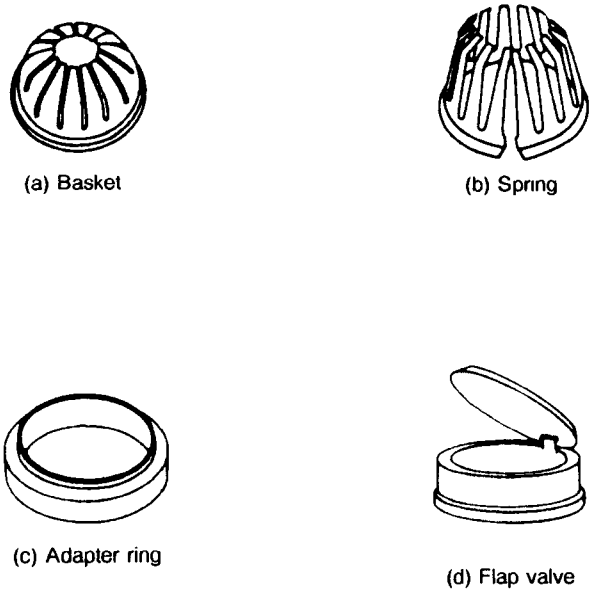

Figure 46. Types of sample retainers (Mobile Drilling Company, 1982).

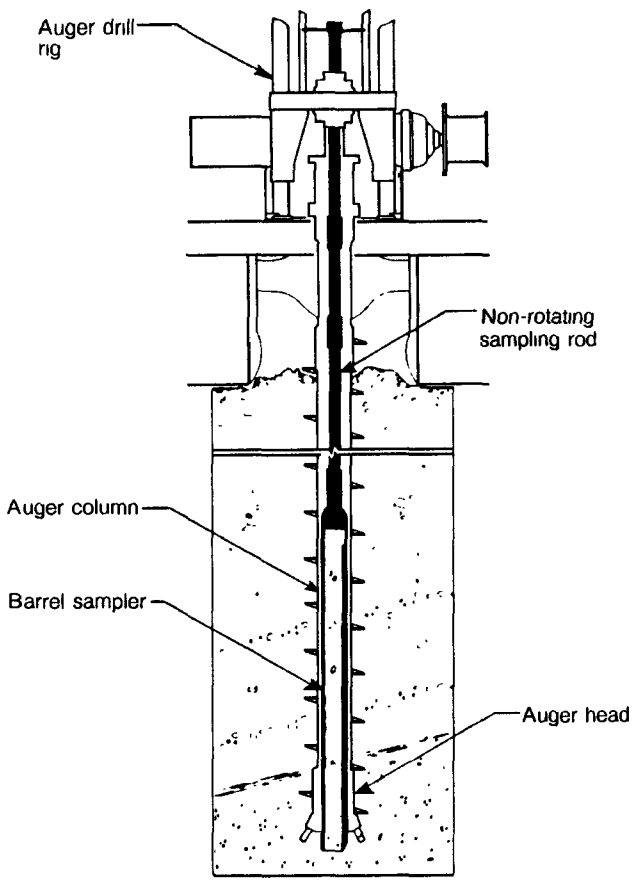

Figure 47. Diagram of a continuous sampling tube system (after Central Mine Equipment Company, 1987).

3) relative drilling cost,
4) availability of drilling equipment,
5) relative time required for well installation and development,
6) ability of drilling technology to preserve natural conditions,
7) ability to install design diameter of well and
8) relative ease of well completion and development.

A complete discussion of the importance of these factors can be found in this section under the heading entitled "Criteria For Evaluating Drilling Methods."

Each matrix has three main parts (Figure 49). The top section of the page contains a brief description that delineates which unique combination of general hydrogeologic conditions and well design requirements apply to evaluations made in that matrix. The middle of the page contains a chart that lists the ten drilling methods on the vertical axis and the eight criteria for evaluating the drilling methods on the horizontal axis. This chart includes relative judgments, in the form of numbers, about the applicability of each drilling method. The bottom of the page contains explanatory notes that further qualify the general hydrogeologic conditions and well design requirements that have influence on the development of the numerical scheme in the chart.

The numbers in the charts are generated by looking at each of the criteria for evaluating drilling methods and evaluating each drilling method on that one criteria with respect to the conditions dictated by the prescribed five general hydrogeologic conditions and well design requirements. The most applicable drilling method is assigned a value of 10 and the other drilling methods are then evaluated accordingly. The process always includes assigning the number 10 to a drilling method. Once each of the criteria is evaluated, the numbers for each drilling method are summed and placed in the total column on the right. Where a drilling method is not applicable, the symbol, "NA," for not applicable, is placed in the row for that drilling method.

How To Use the Matrices

The matrices are provided as an aid to the user when selecting the appropriate drilling technique under selected conditions. The user should begin by referring to Table 2 and choosing the number of the matrix that most closely parallels the hydrogeologic conditions at the site and that has the same anticipated well depth and casing diameter requirements. The user should then refer to that matrix in Appendix B, read the explanatory notes and refer to the relative values in the "total" column of the matrix. Explanatory text for both the drilling methods and the criteria for evaluating drilling methods should be reviewed to understand the assumptions and technical considerations included in the relative numbers.

How To Interpret a Matrix Number

The numbers contained in the "total" column of the chart represent a relative indication of the desirability of each drilling method for the prescribed conditions of the matrix. Higher total numbers indicate more appropriate drilling methods for the specified assumptions. When numbers are relatively close in value, drilling methods may be almost equally as favorable. Where numbers range more widely in value, the matrix serves as a relative guide for delineating a favorable drilling method. The numbers cannot be compared between matrices; numerical results are meaningful only when compared on the same chart. The purpose of the numerical rating is to provide the user with a relative measure of the applicability of drilling methods in specific situations.

Once the user consults the matrix for a preliminary evaluation, it is necessary to reevaluate the numbers in terms of the factors that locally impact the ultimate choice of a drilling method: equipment availability and relative drilling cost. A drilling method might be indicated as the most favorable technique according to the matrix totals, but the equipment may not be available or the cost factor may be prohibitive. In these situations, an alternative drilling method will need to be chosen or the design criteria modified. The drilling costs have been evaluated in the matrix based on relative national costs. Recognizing that relative costs may vary, the user of the matrix should look carefully at the relative cost column to determine if the relative costs are applicable for the specific geographic location of interest. Adjustments should be made if costs differ significantly.

Criteria for Evaluating Drilling Methods

In determining the most appropriate drilling technology to use at a specific site the following criteria must be considered.

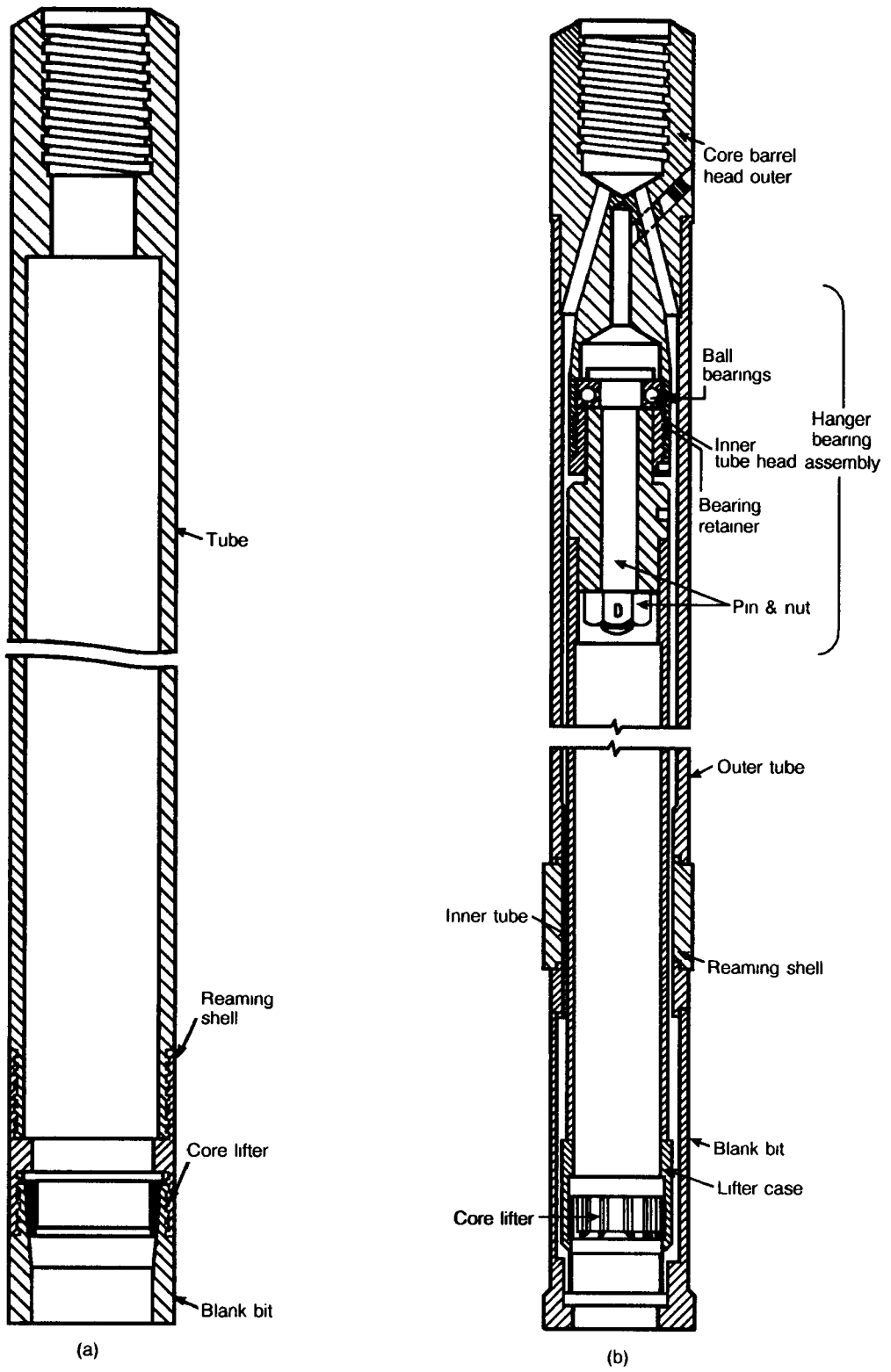

Figure 48. Diagram of two types of core barrels:
a) single tube and b) double-tube (Mobile Drilling Company, 1982).

MATRIX NUMBER 1

General Hydrogeologic Conditions & Well Design Requirements

Unconsolidated; saturated; invasion of formation by drilling fluid permitted; casing diameter 2 inches or less; total well depth 0 to 15 feet.

DRILLING METHODS / CRITERIA FOR EVALUATION OF DRILLING METHODS	Versatility of Drilling Method	Sample Reliability	Relative Drilling Cost	Availability of Drilling Equipment	Relative Time Required for Well Installation and Development	Ability of Drilling Technology to Preserve Natural Conditions	Ability to Install Design Diameter of Well	Relative Ease of Well Completion and Development	TOTAL
Hand Auger	1	5	9	10	5	9	6	4	49
Driving	1	1	10	10	5	5	1	4	37
Jetting	2	1	8	10	5	1	1	1	29
Solid Flight Auger	3	4	7	9	10	4	5	2	44
Hollow Stem Auger	10	10	9	9	10	8	10	9	75
Mud Rotary	8	10	8	10	7	4	10	5	62
Air Rotary	NA	NA	NA	NA	NA	NA	NA	NA	NA
Air Rotary with Casing Hammer	7	5	6	4	6	9	10	10	57
Dual Wall Rotary	7	8	6	1	6	9	10	9	56
Cable Tool	9	10	5	7	4	10	10	10	65

EXPLANATORY NOTES:

1. Unconsolidated formations, predominantly saturated, with saturation exerting significant influence on the choice of drilling technology.
2. Borehole stability problems are potentially severe.
3. The anticipated use of the monitoring well permits the use of drilling fluid and additives in construction.
4. The shallow depth of up to 15 feet, and small completed well diameter of 2 inches or less allows maximum flexibility in equipment.
5. Samples collected in solid flight auger, hollow-stem auger, mud rotary and cable-tool holes are taken by standard split-spoon (ASTM D1586) or thin-wall sampling (ASTM D1587) techniques, at 5-foot intervals.

Figure 49. Format for a matrix on drilling method selection.

These criteria must encompass both hydrogeologic settings and the objectives of the monitoring/drilling program.

Versatility of the Drilling Equipment and Technology with Respect to the Hydrogeologic Conditions at the Site

The drilling equipment must effectively deal with the full range of conditions at each site and also allow the satisfactory installation of well components as designed. The choice of proper drilling techniques requires specific knowledge of: 1) the objectives of the monitoring well, including desired well depth and casing diameter, 2) the type(s) of geologic formations to be penetrated and 3) the potential borehole instability and/or completion difficulties. Additional factors that influence the choice of a drilling method include: 1) saturation or unsaturation of the zone(s) to be drilled, 2) necessity to install a filter pack in the monitoring well and 3) potential adverse effects on the final

monitoring program by drilling fluid invasion into the monitored zone.

The interaction between the geologic formations, hydrologic conditions and the equipment to be used is best illustrated by example. After reviewing the discussion of drilling methods in the beginning of this section, it should be obvious that hollow-stem augers can be used effectively in unconsolidated materials, but are not applicable to the installation of monitoring wells in solid rock such as granite. It may be less obvious that drilling through the saturated, unstable overburden overlying solid rock, such as granite, may be very difficult with the air rotary technique; however, the air rotary technique would be very effective in drilling the granite. The overburden, conversely, can be very effectively dealt with by hollow-stem augers.

If the monitoring objectives in this illustration include pumping at relatively high rates, then a 4-inch or larger casing may be required. The installation of the casing mandates the use of a large inside diameter hollow-stem auger unless the overburden is sufficiently stable to permit open-hole casing installation. If either the casing diameter is too large or the depth is too great, then hollow-stem augers are not appropriate and an alternative drilling technique (e.g. mud rotary, cable tool, drill through casing hammer, etc.) must be evaluated. Thus, judgment has to be made for each site whether or not the preferred drilling technology can deal with the extant hydrogeologic conditions and the objectives of the monitoring program.

Reliability of Formation (Soil/Rock/Water) Samples Collected During Drilling

The purpose of a monitoring well is to provide access to a specific zone for which water level (pressure head) measurements are made, and from which water samples can be obtained. These water samples must accurately represent the quality of the water in the ground in the monitored zone. To this end, it is essential to acquire accurate, representative information about the formations penetrated during drilling and specifically about the intended monitored zone. Sample reliability depends partially on the type of samples that can be taken when using various drilling techniques. The type of samples attainable and the relative reliability of the samples are summarized in Table 19 and discussed below in terms of drilling methods. An additional discussion of sampling techniques is found in the section entitled "Soil Sampling and Rock Coring Methods."

Hand Auger —

Soil samples that are taken by hand auger are disturbed by the augering process and are usually collected directly from the cutting edge of the auger. Deeper samples may be non-representative if sloughing of shallow materials occurs. Drilling by hand auger is usually terminated when the saturated zone is encountered. It is possible to continue drilling below the saturated zone in some situations by adding water and/or drilling mud. However, when water and/or drilling mud are added, reliable samples cannot usually be obtained. An additional discussion of hand augering can be found in the section entitled "Drilling Methods for Monitoring Well Installation."

Driven Wells —

No samples can be taken during the construction of a driven well, although some interpretation of stratigraphic variation can be made from the driving record. Water-quality samples can be obtained in any horizon by pumping from that depth of penetration. An additional discussion of driven wells can be found in the section entitled "Drilling Methods for Monitoring Well Installation."

Jet Percussion —

Neither valid soil samples nor valid water samples can be obtained during the construction of wells by this method. Only gross lithology can be observed in the material that is washed to the surface during the jetting procedure. An additional discussion of jet percussion drilling can be found in the section entitled "Drilling Methods for Monitoring Well Installation."

Solid Flight Augers —

Soil samples collected from solid, continuous flight augers are rotated up the auger flights to the surface during drilling or scraped from the auger flights upon extraction. The disturbed samples from either of these sources provide samples of moderate quality down to the first occurrence of water, and generally unreliable samples below that level.

More valid samples can be obtained where the borehole is stable enough to remain open. In this situation, the auger flights can be removed from the borehole and samples can then be taken by either split-spoon (ASTM D1586) or thin-wall (ASTM D1587) sampling techniques. It is generally not possible to use these techniques in saturated formations with the augers removed because the borehole frequently collapses or the bottom of the borehole "heaves" sand or silt upward into the open borehole. The heaving occurs as a consequence of differential hydrostatic pressure and is exacerbated by the removal of the augers. When caving or heaving occurs, it is very difficult to obtain reliable samples. An additional discussion on solid-flight augers can be found in the section entitled "Drilling Methods for Monitoring Well Installation."

Hollow-Stem Augers —

Where samples are collected from depths of less than 150 feet, the hollow-stem auger technique is the method most frequently used to obtain samples from unconsolidated formations. Samples may be taken through the hollow-stem center of the augers by split-spoon (ASTM D1586), thin-wall (ASTM D1587) or wireline piston sampling methods (refer to Figures 40 through 44). The maximum outside diameter of the sampler is limited by the inside diameter of the hollow stem. If 3.25-inch inside diameter augers are being used, then a maximum 3-inch outside diameter sampler can be used and must still retain the requisite structural strength and meet the requirement to optimize (minimize) the area ratio. An additional discussion on soil sampling can be found in the section entitled "Soil Sampling and Rock Coring Methods."

The rotation of the augers causes the cuttings to move upward and debris to be ground and "smeared" along the borehole in the thin annular zone between the borehole wall and the auger flights. This smearing has both positive and negative connotations. Because the movement of debris is upward, the cuttings from the deeper zones may seal off shallower zones. This minimizes cross-connection of fluids from shallow to deep zones, but increases the possibility of deep to shallow contamination. Shallow zones that may have been penetrated in the upper portion of the borehole are also difficult to develop once

smearing occurs. With the shallow zones sealed off by cutting debris and with the auger flights serving as temporary casing, it is often possible to obtain valid formation samples of discrete saturated zones as they are initially penetrated.

Water samples are difficult to obtain in the saturated zone during drilling due to formation instability. A special type of lead auger flight has been designed to overcome the problem of collecting water samples concurrent with drilling and to make it possible to sample and/or pump test individual zones as the augers are advanced. This specially reinforced screened auger serves as the lead, or lowermost, auger and is placed just above the cutting head (Figure 28). This screened section can be used to temporarily stabilize the borehole while a small-diameter pump or other sampling device is installed within the hollow stem. Appropriate testing can then be performed. The advantage of this technique is low-cost immediate data and water sample acquisition during drilling. The major disadvantages are: 1) doubt about cross-connection of zones and ultimate data validity and 2) the risk of losing both the equipment and the borehole if extremely difficult drilling conditions are encountered since there is some structural weakness in the screened section. An additional discussion of hollow-stem augers can be found in the section entitled "Drilling Methods for Monitoring Well Installation."

Direct Mud Rotary Drilling —

A variety of sampling technologies can be used in concert with mud rotary drilling techniques. These include: 1) grab or ditch samples from circulated cuttings, 2) split-spoon and thin-walled samples in unconsolidated materials and 3) single and double-tube conventional core barrels in consolidated materials. In direct rotary drilling, the functions of the drilling fluid are to: 1) lubricate and cool the bit, 2) remove fragmentary particles as they are loosened and 3) stabilize the borehole. The cuttings are typically circulated up the borehole, through a pipe or ditch, into a temporary settling tank or pit. The drilling fluid is then circulated back down the drill pipe (Figure 29).

Samples taken from the ditch or settling pond (mud pit) are therefore a composite of: 1) materials cut a few minutes earlier (time lag varies with depth, borehole size, drill pipe and pump rate), 2) any unstable materials that have washed or fallen into the borehole from a shallower zone and 3) any re-circulated materials that failed to settle out during earlier circulation. These materials are mixed with the drilling fluid and any additives used during the drilling process. The interpretation of these samples requires experience and even then the interpretation is questionable. Ditch samples are frequently collected in the petroleum industry, but have little practical value in the effective installation of monitoring wells. Thin, stratified zones that require specific monitoring are difficult to identify from ditch samples.

Both split-spoon (ASTM D1586) and thin-wall samples (ASTM D1587) can be obtained while using direct rotary drilling methods in unconsolidated materials. At shallow depths, samples are taken through the drill bit in exactly the same manner as previously described for hollow-stem augers. Corresponding size limitations and sampling problems prevail.

As depths increase below about 150 feet, the time consumed in taking split-spoon and thin-wall samples becomes excessive and wireline sampling devices are used to collect and retrieve samples. Samples can be taken either continuously or intermittently. In unconsolidated materials, wireline samplers can collect only disturbed samples and even then there are recovery problems and limitations for both fine and coarse-grained materials. In consolidated rock the best samples can be obtained by coring.

A significant advantage of drilling with a good drilling mud program is that typically the open borehole can be stabilized by the drilling mud for a sufficient period of time to remove the drilling tools and run a complete suite of geophysical logs in the open hole. This information is used in concert with other data (i.e., the drilling time log, the sample log, fluid loss or gain information and drilling characteristics) to provide definitive evaluation of formation boundaries and to select screen installation intervals.

When attempting to define the in-situ properties of unconsolidated materials, drilling by the mud rotary method offers another advantage. Because the drilling mud maintains the stability of the borehole, samples taken by split-spoon or thin-wall methods ahead of the drill bit tend to be much more representative of indigenous formation conditions than those samples taken, for example, during hollow-stem auger drilling. In auger drilling it is sometimes *very* difficult to obtain a sample from below the cutting head that has not been affected by the formation heaving upward into the open borehole.

If the drilling fluid is clear water with no drilling additives, then it may be difficult to maintain borehole stability because little mudcake accumulates on the wall of the borehole. In this case, the loss or gain of water while drilling is an indication of the location of permeable zones.

Because drilling fluid is used to drill the borehole and because this fluid infiltrates into the penetrated formations, limited water-quality information can be obtained while drilling. Drilling mud seals both high and low-pressure zones if properly used. However, this sealing action minimizes interaquifer cross-contamination while drilling. Before any zone provides representative samples, *all* drilling mud and filtrate should be removed from the formation(s) of interest by well development.

The most common additives to drilling mud are barite (barium sulfate) for weight control and sodium montmorillonite (bentonite) for viscosity and water loss control. Both can alter indigenous water quality.

Bentonite is extremely surface active and forms clay/organic complexes with a wide range of organic materials. The water used to mix the drilling mud is potentially interactive both with the drilling mud and with the water in the formation. At the very least, the drilling fluid dilutes the formation water that is present prior to the drilling activity. For these reasons it is very difficult, if not impossible, to be confident that sufficient development has been performed on a direct rotary-drilled monitoring well, and that the water quality in a particular sample is truly representative of the water quality in place prior to the construction of the well.

Where very low concentrations of a variety of contaminants are being evaluated and where the potential reactions are

undefined, it is not recommended that drilling fluid be used during monitoring well installation. This same concept applies to boreholes drilled by cable tool and/or augering techniques where drilling fluid is necessary for borehole stability. Where drilling mud is used, monitoring well development is continued until such time as a series of samples provides statistical evidence that no further changes are occurring in key parameters. When this occurs, the resultant quality is considered to be representative (Barcelona, et al., 1985a). An additional discussion of drilling fluids can be found in the section entitled "Drilling Fluids."

Water-level measurements of different zones penetrated cannot be determined while drilling with direct rotary methods. Accurate water levels can only be determined by installing, screening and developing monitoring wells in the specific zones of interest. An additional discussion on direct mud rotary drilling can be found in the section entitled "Drilling Methods for Monitoring Well Installation."

Air Rotary —

Direct air rotary is restricted in application to consolidated rock. Where the bedrock is overlain by unconsolidated materials, a borehole can be drilled and sampled by alternative methods including: 1) roller-cone bit with water-based fluid, 2) air with a casing driver, 3) cable tool or 4) augering. Formation samples are taken by the appropriate methods discussed in the related sections of this discussion. Once surface casing is installed and sealed into bedrock, the underlying bedrock can be successfully drilled using air rotary methods.

When using air rotary drilling in semi-consolidated and consolidated materials, air is circulated down the drill pipe and through the bit. The air picks up the cuttings and moves the cuttings up through the annular space between the drill pipe and the wall of the borehole. If the formations drilled are dry, the samples reach the surface in the form of dust. By injecting water or a mixture of water and surfactant (foam): 1) dust is controlled, 2) regrinding of samples is minimized and 3) the sizes of individual particles are increased sufficiently to provide good formation samples. Because the injected water/foam is constantly in motion and supported by the air, there is only a slight possibility of water loss or formation contamination during drilling.

After water is encountered in the borehole, further injection of water from the surface can often be eliminated or minimized and good rock fragments can be obtained that are representative of the formations penetrated. Samples obtained in this manner are not affected by the problems of recirculation, lag time and drilling fluid contamination that plague sample evaluation when drilling mud is used. Air may cause changes in the chemical and biological activity in the area adjacent to the borehole. Examples of quality changes include oxidation and/or stripping of volatile organic chemicals. The time required for these changes to be reversed varies with the hydrogeologic and geochemical conditions. Because the rock boreholes are generally stable and penetration rates are high, there is minimal contamination from previously-drilled upper zones. Water-quality samples and water levels can be easily obtained from the first saturated zone penetrated, but this zone must be cased if subsequent zones are to be individually evaluated.

For monitoring well installation, the injected air must be filtered prior to injection to prevent contamination of the borehole by oil exhausted by the air compressor. Because a down-the-hole hammer requires lubricating oil for operation, it has more limitations for monitoring well installation. An additional discussion on air rotary drilling can be found in the section entitled "Drilling Methods for Monitoring Well Installation."

Air Rotary with Casing Driver —

Unconsolidated formations can be drilled and sampled by combining air rotary drilling with a casing driver method. In this procedure the drill bit is usually extended approximately one foot below the bottom of the open casing, and the casing is maintained in this position as the drill bit is advanced (Figure 33). The casing is either large enough to permit retraction of the bit, in which instance the casing must be driven through the undergauge hole cut by the bit; or an underreamer is used, and the casing moves relatively easily down into the oversized borehole. Generally, the undergauge procedure is favored for sampling unconsolidated formations, and the underreamer is favored for semi-consolidated formations. Either technique allows good samples to be obtained from the freshly-cut formation and circulated up the cased borehole. If chemical quality of the formation sample is important, particularly with regard to volatile organics or materials that can be rapidly oxidized, then air drilling may not be appropriate. When the casing is advanced coincident with the deepening of the borehole, the sample collection procedures and the sample quality are very similar to those prevailing with the use of direct air rotary. An additional discussion on air rotary with casing driver can be found in the section entitled "Drilling Methods for Monitoring Well Installation."

Dual-Wall Reverse Circulation Rotary —

In dual-wall reverse circulation rotary drilling, either water or air can be used as the circulation medium. The outer wall of the dual-wall system serves to case the borehole. Water (or air) is circulated down between the two casing walls, picks up the cuttings at the bottom of the borehole, transports the cuttings up the center of the inner casing and deposits them at the surface. Because the borehole is cased, the samples collected at the surface are very reliable and representative of the formations penetrated. Sample collection using dual-wall rotary has the following advantages: 1) third stratigraphic zones often can be identified; 2) contamination of the borehole by drilling fluid is minimized; 3) interaquifer cross-contamination is minimized; 4) individual zones that are hydraulically distinct can be identified with specific water levels, and discrete samples often can be collected if sufficient time is allowed for recovery; 5) in low hydraulic pressure formations, air pressure within the borehole may prevent the formation water from entering the borehole and 6) sampling at the surface can be continuous. Split-spoon samples can also be collected through the bit. One disadvantage is that because the outer casing is removable and not sealed by grout, hydraulic leakage can occur along the outside of the unsealed casing.

Water or foam can be injected to increase the penetration rate and improve sample quality. An additional discussion of dual-wall reverse circulation rotary drilling can be found in the

section entitled "Drilling Methods for Monitoring Well Installation."

Cable Tool —

When drilling in saturated, unconsolidated sand and gravel, good quality disturbed samples can be obtained by the cable tool "drive and bail" technique. In this technique, casing is driven approximately 2 to 5 feet into the formation being sampled. The sample is then removed from the casing by a bailer. For best sample quality, a flat-bottom bailer is used to clean the borehole (Figure 36). The entire sample is then collected at the surface, quartered or otherwise appropriately split and made available for gradation analyses. When drilling in unsaturated material, water must be added to the borehole during drilling and sampling.

The drive and bail technique is often the best method for sampling well-graded or extremely coarse-grained deposits because both coarse and fine-grained fractions are collected during sampling. Large-diameter casing can be driven and large bailers can be used. The most common size range for casing is from 6 inches to 16 inches although larger sizes are available. For the drive and bail technique to be effective, excessive heaving of the formation upward into the casing during cleanout must be prevented. This can usually be controlled by: 1) overdriving the casing, thereby maintaining a "plug" of the next sample in the casing at all times, 2) careful operation of the bailer and 3) adding water to the borehole to maintain positive hydraulic head within the borehole.

During drive and bail-type drilling, split-spoon (ASTM D1586) and thin-wall (ASTM D1587) samples can be collected after cleaning out the casing with the bailer. Samples are collected ahead of the casing by inserting conventional sampling tools inside the casing. This technique permits sampling of fine-grained, unconsolidated formations.

The quality of cable tool samples from consolidated formations varies with drilling conditions. When the bedrock is saturated, good broken chips of the formation can be obtained by bailing at frequent intervals. If the chips remain in the borehole too long or if sufficient lubrication is lacking, the samples are re-ground to powder.

When drilling by cable tool techniques and using a good casing program, it is usually possible to identify and isolate individual water-bearing units as they are drilled. This provides the opportunity to obtain good water-level and water-quality data. An additional discussion on cable tool drilling can be found in the section entitled "Drilling Methods for Monitoring Well Installation."

Relative Drilling Costs

Drilling and completion costs vary for individual methods with each set of general conditions and well design requirements. For example, the cost of drilling and sampling with the hollow-stem auger method may be much higher for a dense, bouldery till than it is for a similar depth in saturated, medium-soft lake clays. The cost of installing nominal 2-inch diameter casing and screen within hollow-stem augers varies with depth and borehole stability.

The relative drilling cost ratings shown on each matrix apply to the broad range of conditions included within each set of general conditions and well casing requirements. The relative ratings reflect the total cost of drilling, sampling, casing, screening, filter-packing, grouting, developing and surface protecting the monitoring well. Equivalent costs of mobilization and access are assumed. Relative ratings are based on consideration of the average costs when compared to the other methods of drilling throughout the continental United States. Local cost variations can be significantly influenced by equipment availability and can cause variation in these relative ratings. Where local costs vary from the ratings shown, an adjustment should be made to the specific matrix so that the actual costs are more accurately reflected.

Availability of Equipment

The ratings shown in the matrices for equipment availability are based on the general availability of the drilling equipment throughout the United States. The availability of specific equipment on a local basis may necessitate the revision of the rating in the matrix to make the rating more representative.

The type of equipment most generally available for monitoring well installation is the direct mud rotary drilling rig. Direct mud rotary techniques are applicable to water supply wells, gas and oil exploration and development and soil testing. As a result, this equipment is widely available throughout the country.

Solid-flight and hollow-stem augering equipment is also generally available throughout all regions where unconsolidated materials predominate. The portability of augering equipment and the prevalent use of augers in shallow foundation investigations have increased auger availability to almost all areas.

Air rotary drilling has primary application in consolidated rock. Availability of equipment is greatest in those consolidated rock areas where there are mining exploration, water-supply production activities or quarrying applications. The availability of this equipment is greatest in: 1) the western mountainous area, 2) the northeast and 3) the northwest parts of the country.

Casing drivers used in combination with direct air rotary drilling are somewhat sparsely, but uniformly distributed throughout all regions. Versatility in screen installation, casing pulling and application in unconsolidated materials have broadened the use of air rotary with casing driver techniques.

Dual-wall rotary drilling is becoming increasingly popular because the technique can be used in a wide range of both consolidated and unconsolidated formations. Availability is generally restricted to the west-central and southwestern parts of the country.

Cable tool equipment availability is limited in many portions of the south, southeast, southwest, west and northwest. It is generally available in the north-central and northeastern portions of the country.

Relative Time Required for Well Installation and Development

The time required for drilling the well, installing the casing and screen and developing the well can be a significant factor when choosing a drilling method. For example, if a relatively deep hole drilled with cable tool techniques takes several days,

weeks or longer, there may be significant scheduling disadvantages. If longer-term supervision is required, then this additional cost factor must also be taken into account. The excess cost of supervision is not included in the matrix evaluation. Similarly, if a direct mud rotary technique is employed to make a fast installation and an additional three weeks of development is required before a valid sample can be obtained, the advantages of the rapid installation need to be re-evaluated.

Ability of Drilling Technology to Preserve Natural Conditions

Assuming that the purpose of a monitoring well is to provide access to a specific zone for which water-level (pressure head) measurements are to be made, and from which water samples can be obtained to accurately represent the quality of the water in place in the zone being monitored, then it is obviously important that the drilling methodology employed must minimize the disturbance of indigenous conditions or offer a good possibility that indigenous conditions can be restored. To achieve these goals, the drilling methodology should result in minimal opportunity for physical and/or chemical interactions that might cause substantial or unpredictable changes in the quality of the water being sampled. The following discussions present some of the problems and potential problems related to the disturbance of the natural conditions as a consequence of monitoring well drilling and installation:

1) When using drilling mud in the borehole, filtrate from the drilling fluid invades the adjacent formations. This filtrate mixes with the natural formation fluids and provides the opportunity for chemical reaction between the mud filtrate and the formation fluid. If chemical reactions occur, "false" water-quality readings may result. The mixing effect is minimized by good development; potential chemical reactions are more difficult to deal with in a reasonably predictable manner. For example, if a high pH filtrate invades a low pH formation and metals are present in either fluid, precipitation of the metals can be anticipated in the vicinity of the borehole. The metals may subsequently be re-dissolved at an unknown rate, if chemical conditions are not constant. Thus, the drilling fluid filtrate invasion can result in alternately low and high readings of metals at different intervals of time.

2) When a monitoring well is drilled with augers, fine silts and clays commonly smear along the borehole wall and frequently seal the annular space between the augers and the borehole wall. This sealing action can then minimize the cross-connection of discrete zones. However, the fine-grained particulate matter that is smeared into the zone of interest also reduces the flow from that zone, introduces the possibility of cross-contamination from another zone and presents the opportunity for the clays that are smeared into the zone to sorb contaminants and consequently generate non-representative water-quality results. In mud rotary drilling, a mudcake is deposited on the borehole wall. This bentonitic mudcake serves to stabilize the borehole and also has the capacity to sorb both organic and inorganic constituents.

3) During any drilling process physical disruption of the formation occurs and grain-to-grain relationships change. Regardless of whether or not the well is completed with a natural or artificial filter pack, the flow paths to the well are altered; tortuosity is changed; Reynolds numbers are modified with flow path and velocity variations; and equilibrium (if, in fact, the indigenous water is at equilibrium) is shifted. If the formation is permitted to collapse, as may occur in sand and gravel materials, the removal of the collapsed material exacerbates the problem.

   With the changes that occur in the physical setting, it is very difficult to be confident that the water samples subsequently collected from the monitoring well truly reflect conditions in the ground beyond the influence of the disturbed zone around the well. The changes are of particular concern when analyzing for very low concentrations of contamination.

It becomes apparent that a drilling technique that has the least possible disruptive influence on the zone(s) being monitored is preferable in any given setting. The matrices presented indicate the relative impact of the various drilling methodologies for the designated circumstances.

Ability of the Specified Drilling Technology to Permit the Installation of the Proposed Casing Diameter at the Design Depth

The design diameter for the casing and well intakes(s) to be used in any monitoring well depends on the proposed use of the monitoring well (i.e. water-level measurement, high-volume sampling, low-volume sampling, etc.). When installing artificial filter packs and bentonite seals, a minimum annular space 4 inches greater in diameter than the maximum outside diameter of the casing and screen is generally needed. A 2-inch outside diameter monitoring well would then require a minimum 6-inch: 1) outside diameter borehole, 2) auger inside diameter or 3) casing inside diameter for reliable well installation. This need for a 4-inch annular space places a severe limitation on the use of several currently-employed drilling technologies.

For example, hollow-stem augers have been widely used to install 2 3/8-inch outside diameter monitoring wells. A significant portion of this work has been performed within 3 1/4-inch inside diameter hollow-stem augers. At shallow depths, especially less than fifteen feet, it has been possible to install well intake and casing, filter pack, bentonite seal and surface grout within the small working space. However, at greater depths, it is very doubtful if many of these components are truly emplaced as specified. There simply is not sufficient annular clearance to work effectively. For a more complete discussion on filter pack and screen emplacement in hollow-stem augers, refer to Appendix A.

When drilling with direct air rotary with a casing hammer, the maximum commonly-used casing size is 8 inches in diameter. The outside diameter of the monitoring well casing should

therefore be 4 inches or less to maintain adequate working space. Because pipe sizes are classified by nominal diameters, the actual working space will be somewhat less than the stated annular diameter unless the actual pipe O.D. is used in calculations.

When drilling through unstable formations with dual-wall reverse circulation methods, the monitoring well casing must be installed through the bit. The hole in the bit barely permits the insertion of a nominal 2-inch diameter casing. This method does not allow the installation of an artificial filter pack because there is no clearance between the bit and 2-inch casing.

The ratings presented in each matrix evaluate the relative ability of the various methodologies to permit the installation of the design casing diameters in the indicated hydrogeologic conditions.

Ease of Well Completion and Development

Well completion and development difficulty varies with: 1) well depth, 2) borehole diameter, 3) casing and well intake diameter, 4) well intake length, 5) casing and well intake materials, 6) drilling technique, 7) mud program, 8) hydrostatic pressure of the aquifer, 9) aquifer transmissivity, 10) other hydrogeologic conditions and 11) geologic conditions that affect the borehole. The relative ease of dealing with these variables by the selected drilling equipment is shown in each matrix for the indicated conditions. For example, where a relatively thin, low-yield aquifer has been drilled with hollow-stem augers, the muddy clay/silt mixture from the borehole tends to seal the zone where the well intake is to be set. The development of this zone is very difficult. If a filter pack has been installed, development becomes almost impossible. If direct mud rotary is used to drill this same low transmissivity zone, and the mudcake from the drilling fluid remains between the filter pack and the borehole wall, very difficult development can be expected. If the borehole is drilled with clear water, development *might* be easier.

For any given scenario a very subtle modification of procedure may make the difference between success and failure. The ratings shown in the matrices are based on general considerations. Their relative values expressed in the table vary in specific circumstances. Most importantly, however, is that an experienced observer be able to make on-site observations and to modify the procedures as the work progresses.

Drilling Specifications and Contracts

The cost of installing a monitoring well depends on several factors including: 1) site accessibility, 2) labor and material costs, 3) well design, 4) well use, 5) well development, 6) well yield and 7) local geologic conditions (Everett 1980). Because these factors are variable, it is important to secure a well contract that addresses these items in a concise and clear format. Proper formatting helps ensure that the well will be constructed as specified in the contract and for the agreed price. In simple terms, a well-written contract is a quality control check on well construction.

Monitoring well contracts are typically written in three major sections including: 1) general conditions, 2) special conditions and 3) technical specifications. General conditions address items related to the overall project performance including: scheduling, materials, equipment, labor, permits, rights of various parties, tests and inspections, safety, payments, contracts, bonds and insurance (Driscoll, 1986). Special conditions detail project-specific and site-specific items including: 1) a general description of the purpose and scope of the work, 2) work schedule, 3) insurance and bond requirements, 4) pertinent subsurface information, 5) description of necessary permits, 6) information on legal easements, 7) property boundaries and utility location and 8) a description of tests to be performed and materials to be used during the project (United States Environmental Protection Agency, 1975). If general and special conditions appear to conflict, special conditions of the contract prevail (Driscoll, 1986). Technical specifications contain detailed descriptions of dimensions, materials, drilling methods and completion methods.

Most contracts are awarded as part of a bidding process. The bidding process may be either competitive or non-competitive. In a competitive bidding process, contractors are asked to submit cost estimates based on a set of specifications for drilling the monitoring wells. The specifications are developed prior to the request for cost proposal by either the client or a consultant to the client. Suggested areas that should specifically be addressed in the specifications are listed in Table 22.

Table 22. Suggested Areas to be Addressed in Monitoring Well Bidding Specifications

- Scope of Work
- Site Hydrogeology
  - existing reports
  - well logs
  - depth of wells
- Schedule of Work Dates
- Well Drilling Installation
  - materials
  - drilling method(s)
  - annular seal installation
  - development
  - protective equipment
  - disposal of cuttings
- Record-Keeping and Requirements
- Sampling Requirements and Procedures
- Site Access
  - road construction
  - tree clearing
  - drainage
  - leveling
- Decontamination of Equipment
  - procedures
  - materials
  - disposal of cuttings and liquids
- Site Safety
  - equipment
  - training
- Conditions
  - permits
  - certificates
  - utility location
  - site clean up
  - procedures for drilling difficulties
  - non-functioning wells
  - government forms required
  - client's right to vary quantities or delete items
- Payment Procedures

After cost estimates are obtained, a contractor is selected based on qualifications and pricing. Although some contracts are awarded by choosing the lowest bidder, this practice is not suggested unless the qualifications of the contractor indicate that a quality job can be performed. It is good policy to meet with the selected bidder prior to signing the contract and clarify every technical point and related unit cost. This understanding, duly noted by minutes of the meeting, can eliminate costly errors and misunderstandings. An inspection of the contractor's equipment that will be used on the job should also be made.

Qualifications of contractors are often evaluated during a prequalification process. A contractor prequalifies by submitting information about previous job experience that is related to the scope of work. The prequalification process allows the client to accept bids only from contractors that demonstrate specific qualifications to perform the job. This process helps to ensure that the monitoring wells will be installed by competent contractors. When subcontractors for drilling or supplies are to be employed, the list of subcontractors should also be approved prior to the contract award.

Another way to avoid misunderstandings during the bidding process is to hold a bidders meeting. In a bidders meeting, the potential contractors meet in a group forum with the client to discuss the overall scope of the proposed work and to discuss specifications for monitoring well installation. Any questions about the specifications or problems with performance according to the specifications can be discussed and resolved prior to proposal submission. All information must be provided equally to all prospective bidders.

In non-competitive bidding, cost estimates are provided by only one contractor. Because the procedure may be less formal, the contractor may play a more active role in developing the monitoring well specifications and presenting a cost estimate. However, a less formal process may also mean that written specifications for monitoring well installation may never be developed. This situation should be avoided to help ensure that the monitoring wells are constructed properly.

Cost proposals can be submitted in a variety of formats including: 1) fixed price, 2) unit price and 3) cost plus. Fixed-price contracts list the manpower, materials and additional costs needed to perform the work and specify a fixed price that will be paid upon completion of the work. Unit price contracts are similar, but establish a fixed price for each unit of work that is performed. Cost-plus contracts list specific costs associated with performing the work and include a percentage of those costs as an additional amount that will be paid to perform a job. A percentage listed in a cost-plus contract is typically viewed as the profit percentage being proposed by the contractor. In fixed-price and unit-price proposals, the profit percentage is included as part of the itemized pricing structure.

To ensure that the monitoring well is constructed according to the intent of the specifications, the contract should be very specific and list all necessary items and procedures so that nothing is left to interpretation or imagination. This clarity can best be obtained by listing individual pay items instead of combining items into unspecified quantities in lump sum pricing. Suggested items that should specifically be addressed in the contract on a unit price basis are listed in Table 23.

The bidder should also be required to supply information on: 1) estimated time required for job completion, 2) date available to start work, 3) type and method of drilling equipment to be used and 4) insurance coverage. A pay item system may also reduce the need for change during the drilling process by further clarifying the procedures to be used (Wayne Westberg, M-W Drilling, Inc., personal communication, 1986). A change order is a written agreement from the purchaser to the contractor authorizing additions, deletions or revisions in the scope of work, or an adjustment in the contract price or effective period of the contract (United States Environmental Protection Agency, 1975). The contract should specify what payment provisions

Table 23. Suggested Items for Unit Cost in Contractor Pricing Schedule

Item	Pricing Basis
•Mobilization	lump sum
•Site preparation	lump sum
•Drilling to specified depth	per lineal foot or per hour
•Sampling	each
•Material supply	
surface casing	per lineal foot
well casing	per lineal foot
end caps	each
screen	per lineal foot
filter material	per lineal foot or per bag
bentonite seal(s)	per lineal foot
grout	per lineal foot or per bag
casing protector	each
•Support equipment	
water truck and water	lump sum
bulldozer	per hour
•Decontamination	lump sum
•Standby	per hour
•Field expenses	per man day or lump sum
•Material installation	per hour or lump sum
•Well development	per hour or lump sum
•Demobilization	lump sum
•Drilling cost adjustment for variations in depths	± per foot

will be made if the monitoring well cannot be completed as specified. The contract should also define who bears the costs and what the basis for payment will be when drilling difficulties are encountered that were not anticipated in the pricing schedule.

After the contract is signed and work is scheduled to begin, a predrilling meeting between the supervising geologist and the driller should be held to discuss operational details. This meeting reduces the opportunity for misunderstanding of the specifications and improves project relationships.

References

Aardvark Corporation, 1977. Product literature; Puyallup, Washington, 2 pp.

Acker Drill Company, Inc., 1985. Soil sampling tools catalog; Scranton, Pennsylvania, 17 pp.

Acker, W.L., 1974. Basic procedures for soil sampling and core drilling; Acker Drill Company, Inc., Scranton, Pennsylvania, 246 pp.

American Society for Testing and Materials, 1983. Standard practice for thin-wall tube sampling of soils: D1587; 1986 Annual Book of American Society for Testing and Materials Standards, Philadelphia, Pennsylvania, pp. 305-307.

American Society for Testing and Materials, 1984. Standard method for penetration test and split barrel sampling of soils: D1586; 1986 Annual Book of American Society for Testing and Materials Standards, Philadelphia, Pennsylvania, pp. 298-303.

Barcelona, M.J., J.P. Gibb, J.A. Helfrich and E.E. Garske, 1985a. Practical guide for ground-water sampling; Illinois State Water Survey, SWS Contract Report 374, Champaign, Illinois, 93 pp.

Buckeye Drill Company/Bucyrus Erie Company, 1982. Buckeye drill operators manual; Zanesville, Ohio, 9 pp.

Central Mine Equipment Company, 1987, Catalog of product literature; St. Louis, Missouri, 12 pp.

Driscoll, Fletcher G., 1986. Ground water and wells; Johnson Division, St. Paul, Minnesota, 1089 pp.

Everett, Lorne G., 1980. Ground-water monitoring; General Electric Company technology marketing operation, Schenectady, New York, 440 pp.

Hvorslev, M.J., 1949. Subsurface exploration and sampling of soils for civil engineering purposes; United States Army Corps of Engineers, Waterways Experiment Station, Vicksburg, Mississippi, 465 pp.

Ingersoll-Rand, 1976. The water well drilling equipment selection guide; Ingersoll-Rand, Washington, New Jersey, 12 pp.

Krynine, Dimitri P. and William R. Judd, 1957. Principles of engineering geology and geotechnics; McGraw-Hill, New York, New York, 730 pp.

Layne-Western Company, Inc., 1983. Water, geological and mineral exploration utilizing dual-wall reverse circulation; Product literature, Mission, Kansas, 8 pp.

Leach, Lowell E., Frank P. Beck, John T. Wilson and Don H. Kampbell, 1988. Aseptic subsurface sampling techniques for hollow-stem auger drilling; Proceedings of the Second National Outdoor Action Conference on Aquifer Restoration, Ground-Water Monitoring and Geophysical Methods, vol. I; National Water Well Association, Dublin, Ohio, pp. 31-51.

Mobile Drilling Company, 1982. Auger tools and accessories; Catalog 182, Indianapolis, Indiana, 26 pp.

National Water Well Association of Australia, 1984. Drillers training and reference manual; National Water Well Association of Australia, St. Ives, South Wales, 267 pp.

Petroleum Extension Service, 1980. Principles of Drilling Fluid Control; Petroleum Extension Service, University of Texas, Austin, Texas, 215 pp.

Speedstar Division of Koehring Company, 1983. Well drilling manual; National Water Well Association, Dublin, Ohio, 72 pp.

United States Environmental Protection Agency, 1975. Manual of water well construction practices; United States Environmental Protection Agency, Office of Water Supply, EPA-570/9-75-001, 156 pp.

Zapico, Michael M., Samuel Vales and John A. Cherry, 1987. A wireline piston core barrel for sampling cohesionless sand and gravel below the water table; Ground Water Monitoring Review, vol. 7, no. 3, pp. 74-82.

Section 5
Design Components of Monitoring Wells

Introduction

It is not possible to describe a "typical" ground-water monitoring well because each monitoring well must be tailored to suit the hydrogeologic setting, the type of contaminants to be monitored, the overall purpose of the monitoring program and other site-specific variables. However, it is possible to describe the individual design components of monitoring wells. These design components may be assembled in various configurations to produce individual monitoring well installations suited to site-specific conditions. Figure 21 illustrates the monitoring well design components that are described in this chapter.

Well Casing

Purpose of the Casing

Casing is installed in a ground-water monitoring well to provide access from the surface of the ground to some point in the subsurface. The casing, associated seals and grout prevent borehole collapse and interzonal hydraulic communication. Access to the monitored zone is through the casing and into either the open borehole or the screened intake. The casing thus permits piezometric head measurements and ground-water quality sampling.

General Casing Material Characteristics

Well casing can be made of any rigid tubular material. Historically, the selection of a well casing material (predominantly for water supply wells) focused on structural strength, durability in long-term exposure to natural ground-water environments and ease of handling. Different materials have demonstrated versatility in well casing applications. In the late 1970s, questions about the potential impact that casing materials may have on the chemical integrity or "representativeness " of a ground-water sample being analyzed in parts per million or parts per billion were raised. Today the selection of appropriate materials for monitoring well casing must take into account several site-specific factors including: 1) geologic environment, 2) natural geochemical environment, 3) anticipated well depth, 4) types and concentrations of suspected contaminants and 5) design life of the monitoring well. In addition, logistical factors must also be considered including: 1) well drilling or installation methods, 2) ease in handling, 3) cost and 4) availability.

The most frequently evaluated characteristics that directly influence the performance of casing materials in ground-water monitoring applications are: 1) strength and 2) chemical resistance/interference. These characteristics are discussed in more detail below.

Strength-Related Characteristics —

Monitoring well casing must be strong enough to resist the forces exerted on it by the surrounding geologic materials and the forces imposed on it during installation (Figure 50). The casing must also exhibit structural integrity for the expected duration of the monitoring program under natural and man-induced subsurface conditions. When casing strength is evaluated, three separate yet related parameters are determined: 1) tensile strength, 2) compressive strength and 3) collapse strength.

The tensile strength of a material is defined as the greatest longitudinal stress the substance can bear without pulling the material apart. Tensile strength of the installed casing varies with composition, manufacturing technique, joint type and casing dimensions. For a monitoring well installation, the selected casing material must have a tensile strength capable of supporting the weight of the casing string when suspended from the surface in an air-filled borehole. The tensile strength of the casing joints is equally as important as the tensile strength of the casing. Because the joint is generally the weakest point in a casing string, the joint strength will determine the maximum axial load that can be placed on the casing. By dividing the tensile strength by the linear weight of casing, the maximum theoretical depth to which a dry string of casing can be suspended in a borehole can be calculated. When the casing is in a borehole partially filled with water, the buoyant force of the water increases the length of casing that can be suspended. The additional length of casing that can be suspended depends on the specific gravity of the casing material.

The compressive strength of a material is defined as the greatest compressive stress that a substance can bear without deformation. Unsupported casing has a much lower compressive strength than installed casing that has been properly grouted and/or backfilled because vertical forces are greatly diminished by soil friction. This friction component means that the casing material properties are more significant to compressive strength than is wall thickness. Casing failure due to compressive strength limitation is generally not an important factor in a properly installed monitoring well.

Equally important with tensile strength is the final strength-related property considered in casing selection -- collapse strength. Collapse strength is defined as the capability of a casing to resist collapse by any and all external loads to which it is subjected both during and after installation. The resistance of casing to collapse is determined primarily by outside diameter and wall thickness. Casing collapse strength is proportional to the cube of the wall thickness. Therefore, a small increase in

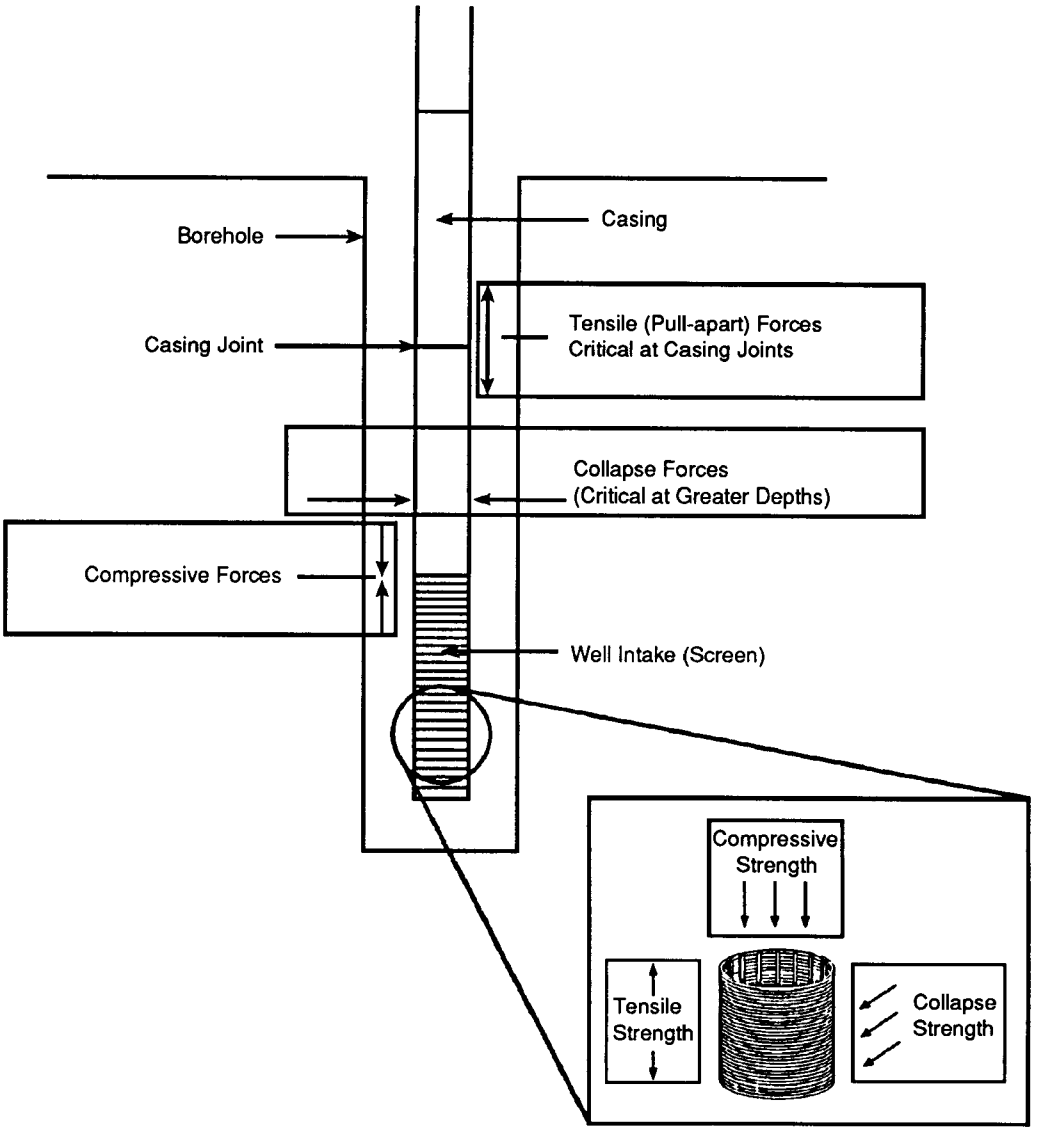

Figure 50. Forces exerted on a monitoring well casing and screen during installation.

wall thickness provides a substantial increase in collapse strength. Collapse strength is also influenced by other physical properties of the casing material including stiffness and yield strength.

A casing is most susceptible to collapse during installation before placement of the filter pack or annular seal materials around the casing. Although it may collapse during development, once a casing is properly installed and therefore supported, collapse is otherwise seldom a point of concern (National Water Well Association and Plastic Pipe Institute, 1981). External loadings on casing that may contribute to collapse include:

1) net external hydrostatic pressure produced when the static water level outside of the casing is higher than the water level on the inside;
2) unsymmetrical loads resulting from uneven placement of backfill and/or filter pack materials;
3) uneven collapse of unstable formations;
4) sudden release of backfill materials that have temporarily bridged in the annulus;
5) weight of cement grout slurry and impact of heat of hydration of grout on the outside of a partially water-filled casing;
6) extreme drawdown inside the casing caused by over pumping;
7) forces associated with well development that produce large differential pressures on the casing; and
8) forces associated with improper installation procedures where unusual force is used to counteract a borehole that is not straight or to overcome buoyant forces.

Of these stresses, only external hydrostatic pressure can be predicted and calculated with accuracy; others can be avoided

by common sense and good practice. To provide sufficient margin against possible collapse by all normally-anticipated external loadings, a casing should be selected such that resistance to collapse is more than required to withstand external hydrostatic pressure alone. Generally, a safety factor of at least two is recommended (National Water Well Association and Plastic Pipe Institute, 1981). According to Purdin (1980), steps to minimize the possibility of collapse include:

1) drilling a straight, clean borehole;
2) uniformly distributing the filter-pack materials at a slow, even rate;
3) avoiding the use of quick-setting (high temperature) cements for thermoplastic casing installation;
4) adding sand or bentonite to a cement to lower the heat of hydration; and
5) controlling negative pressures inside the well during development.

Chemical Resistance Characteristics —

Materials used for well casing in monitoring wells must be durable enough to withstand galvanic or electrochemical corrosion and chemical degradation. Metallic casing materials are most subject to corrosion; thermoplastic casing materials are most subject to chemical degradation. The extent to which these processes occur depends on water quality within the formation and changing chemical conditions such as fluctuations between oxidizing and reducing states. Casing material must therefore be chosen with a knowledge of the existing or anticipated ground-water chemistry. When anticipated water quality is unknown, it is prudent to use conservative materials to avoid chemical or potential water quality problems. If ground-water chemistry affects the structural integrity of the casing, the products of casing deterioration may also adversely affect the chemistry of water samples taken from the wells.

Chemical Interference Characteristics —

Materials used for monitoring well casing must not exhibit a tendency to either sorb (take out of solution by either adsorption or absorption) or leach chemical constituents from or into the water that is sampled from the well. If a casing material sorbs selected constituents from the ground water, those constituents will either not be present in any water-quality sample (a "false negative") or the level of constituents will be reduced. Additionally, if ground-water chemistry changes over time, the chemical constituents that were previously sorbed onto the casing may begin to desorb and/or leach into the ground water. In either situation, the water-quality samples are not representative.

In the presence of aggressive aqueous solutions, chemical constituents can be leached from casing materials. If this occurs, chemical constituents that are not indicative of formation water quality may be detected in samples collected from the well. This "false positive" might be considered to be an indication of possible contamination when the constituents do not relate to ground-water contamination per se, but rather to water sample contamination contributed by the well casing material. The selection of a casing material must therefore consider potential interactions between the casing material and the natural and the man-induced geochemical environment. It is important to avoid "false positive" and especially "false negative" sample results.

Types of Casing Materials

Casing materials widely available for use in ground-water monitoring wells can be divided into three categories:

1) fluoropolymer materials, including polytetrafluoroethylene(PTFE), tetrafluoroethylene (TFE), fluorinated ethylene propylene (FEP), perfluoroalkoxy (PFA) and polyvinylidene fluoride (PVDF);
2) metallic materials, including carbon steel, low-carbon steel, galvanized steel and stainless steel (304 and 316); and
3) thermoplastic materials, including polyvinyl chloride (PVC) and acrylonitrile butadiene styrene (ABS).

In addition to the three categories that are widely used, fiberglass-reinforced materials including fiberglass-reinforced epoxy (FRE) and fiberglass-reinforced plastic (FRP) have been used for monitoring applications. Because these materials have not yet been used in general application across the country, very little data are available on characteristics and performances. Therefore, fiberglass-reinforced materials are not considered further herein.

Each material possesses strength-related characteristics and chemical resistance/chemical interference characteristics that influence its use in site-specific hydrogeologic and contaminant-related monitoring situations. These characteristics for each of the three categories of materials are discussed below.

Fluoropolymer materials —

Fluoropolymers are man-made materials consisting of different formulations of monomers (organic molecules) that can be molded by powder metallurgy techniques or extruded while heated. Fluoropolymers are technically included among the thermoplastics, but possess a unique set of properties that distinguish them from other thermoplastics. Fluoropolymers are nearly totally resistant to chemical and biological attack, oxidation, weathering and ultraviolet radiation; have a broad useful temperature range (up to 550°F); have a high dielectric constant; exhibit a low coefficient of friction; have anti-stick properties; and possess a greater coefficient of thermal expansion than most other plastics and metals.

There exist a variety of fluoropolymer materials that are marketed under a number of different trademarks. Descriptions and basic physical properties of some of the more popular fluoropolymers with appropriate trademarks are discussed below.

Polytetrafluoroethylene (PTFE) was discovered by E.I. DuPont de Nemours in 1938 and was available only to the United States government until the end of World War II. According to Hamilton (1985), four principal physical properties are:

1) extreme temperature range -- from -400°F to +500°F in constant service;
2) outstanding electrical and thermal insulation;

3) lowest coefficient of friction of any solid material; and
4) almost completely chemically inert, except for some reaction with halogenated compounds at elevated temperatures and pressures.

In addition, PTFE is flexible without the addition of plasticizers and is fairly easily machined, molded or extruded. PTFE is by far the most widely-used and produced fluoropolymer. Trade names, manufacturers and countries of origin of PTFE and other fluoropolymer materials are listed in Table 24. Typical physical properties of the various fluoropolymer materials are described in Table 25.

Fluorinated ethylene propylene (FEP) was also developed by E.I. DuPont de Nemours and is perhaps the second most widely used fluoropolymer. It duplicates nearly all of the physical properties of PTFE except the upper temperature range, which is 100°F lower. Production of FEP-finished products is generally faster because FEP is melt-processible, but raw materials costs are higher.

Perfluoroalkoxy (PFA) combines the best properties of PTFE and FEP, but the former costs substantially more than either of the other fluoropolymers. Polyvinylidene fluoride (PVDF) is tougher and has a higher abrasion resistance than other fluoropolymers and is resistant to radioactive environments. PVDF has a lower upper temperature limit than either PTFE or PFA.

Care should be exercised in the use of trade names to identify fluoropolymers. Some manufacturers use one trade name to refer to several of their own different materials. For example, DuPont refers to several of its fluoropolymer resins as Teflon® although the products referred to have different physical properties and different fabricating techniques. These materials may not always be interchangeable in service.

For construction of ground-water monitoring wells, fluoropolymers possess several advantages over other thermoplastics and metallic materials. For example, fluoropolymers are almost completely inert to chemical attack, even by extremely aggressive acids (i.e., hydrofluoric, nitric, sulfuric and

Table 24. Trade Names, Manufacturers, and Countries of Origin for Various Fluoropolymer Materials

Chemical Formulation	Trade Name	Manufacturer	Country of Origin
PTFE (or TFE)- Polytetrafluoroethylene	Teflon	DuPont	USA, Holland, Japan
	Halon	Allied	USA
	Fluon	ICI	UK, USA
	Hostaflon	Hoechs	W. Germany
	Polyflon	Daikin	Japan
	Algoflon	Montedison	Italy
	Soriflon	Ugine Kuhlman	France
FEP- Fluorinated ethylene propylene	Neoflon	Daikin	Japan
	Teflon	DuPont	USA, Japan, Holland
PFA- Perfluoroalkoxy	Neoflon	Daikin	Japan
	Teflon	DuPont	USA, Japan, Holland
PVDF- Polyvinylidene fluoride	Kynar	Pennwalt	USA
CTFE- Chlorotrifluoroethylene	Kel-F	3M	USA
	Diaflon	Daikin	Japan

Table 25. Typical Physical Properties of Various Fluoropolymer Materials (After Norton Performance Plastics, 1985)

Properties	Units	ASTM Method	TFE	FEP	PFA	E-CTFE	CTFE
Tensile strength @73°F	psi	D638-D651	2500-6000	2700-3100	4000-4300	7000	4500-6000
Elongation @73°F	%	D638	150-600	250-330	300-350	200	80-250
Modulus@ 73°F							
Tensile	psi	D638	45,000-115,000		-	240,000	206,000
Flexural	psi	D790	70,000-110,000	95,000	95,000-100,000	240,000	238,000
Elasticity in tension		D747	58,000	250,000	--	-	$1.5\text{-}3.0 \times 10^5$
Flexural strength@73°F	psi	D790	Does not break	Does not break	Does not break	7000	8500
Izod impact strength (1/2 X1/2-in. notched bar)							
@+75°F	ft. lbs./in. of notch	D256	3.0	No break	No break	No break	5.0
@-65°F	ft. lbs./in. of notch		2.3	2.9	-	-	-
Tensile impact strength							
@+73°F	ft. lbs./sq. in.	D1822	320	1020	-	-	-
@-65°F	ft. lbs./sq. in.		105	365	-	-	-
Compressive stress @ 73°F	psi	D695	1700	-	-	-	4600-7400
Specific gravity		D792	2.14-2.24	2.12-2.17	2.12-2.17	1.68	2.10-2.13
Coefficient of friction static & kinetic against polished steel			0.05-0.08	0.06-0.09	0.05-0.06	0.15-0.65	0.2-0.3
Coefficient of linear thermal-expansion	/°F	D696	$5.5X10^{-5}$	$5.5X10^{-5}$	$6.7X10^{-5}$	$14X10^{-5}$	$2.64X10^{-5}$

hydrochloric) and organic solvents. In addition, sorption of chemical constituents from solutions and leaching of materials from the fluoropolymer chemical structure has been believed to be minimal or non-existent. Although studies are still ongoing, Reynolds and Gillham (1985) indicate that extruded tubing of at least one fluoropolymer (PTFE) is prone to absorption of selected organic compounds, specifically 1,1,1-trichloroethane, 1,1,2,2-tetrachloroethane, hexachloroethane and tetrachloroethane; a fifth organic compound studied, bromoform, was not sorbed by PTFE. An observation of particular note made by Reynolds and Gillham was that tetrachloroethane was strongly and rapidly sorbed by the PTFE tubing such that significant reductions in concentration occurred within minutes of exposure to a solution containing the aforementioned organic compounds. These results indicate that PTFE may not be as inert as previously thought. Barcelona and Helfrich (1988) provide a review of laboratory and field studies of well casing material effects.

Although numerous such wells have been successfully installed, there may be some potential drawbacks to using fluoropolymers as monitoring well casing materials. For example, PTFE is approximately 10 times more expensive than PVC. In addition, fluoropolymer materials are more difficult to handle than most other well casing materials. Fluoropolymer materials are heavier and less rigid than other thermoplastics and slippery when wet because of a low coefficient of friction. Dablow et al. (1988) discuss installation of fluoropolymer wells and address some of the potential difficulties. As they point out, several strength-related properties of fluoropolymers (PTFE in particular) must be taken into consideration during the well design process, including: 1) pull-out resistance of flush-joint threaded couplings (tensile strength); 2) compressive strength of the intake section; and 3) flexibility of the casing string.

The tensile strength of fluoropolymer casing joints is the limiting factor affecting the length of casing that can be supported safely in a dry borehole. According to Dablow et al. (1988), experimental work conducted by DuPont indicates that PTFE threaded joints will resist a pull-out load of approximately 900 pounds. With a safety factor of two, 2-inch schedule 40 PTFE well casing with a weight of approximately 1.2 pounds per foot should be able to be installed to a depth of approximately 375 feet. Barcelona et al. (1985a) suggest that the recommended hang length not exceed 320 feet. In either case, this is less than one tenth the tensile strength of an equivalent-sized thermoplastic (i.e., PVC) well casing material. Additionally, because the specific gravity of PTFE is much higher than that of thermoplastics (about 2.2), the buoyant force of water is not great. However, the buoyant force is sufficient to increase the maximum string length by approximately 10 percent for that portion of the casing material in contact with water.

Compressive strength of fluoropolymer well casings and particularly intakes is also a recognized problem area. A low compressive stress when compared to other thermoplastics may lead to failure of the fluoropolymer casing at the threaded joints where the casing is weakest and the stress is greatest. According to Dablow et al. (1988), the "ductile" behavior of PTFE has resulted in the partial closing of intake openings with a consequent reduction in well efficiency in deep fluoropolymer wells. Dablow et al. (1988) suggest that this problem can be minimized by designing a larger slot size than is otherwise indicated by the sieve analyses. In compressive strength tests conducted by DuPont to determine the amount of deformation in PTFE well intakes that occurs under varying compressive stresses, a linear relationship was demonstrated between applied stress and the amount of intake deformation. This relationship is graphically presented in Figure 51. From this graph, the anticipated intake opening deformation can be determined and included in intake design by calculating the load and adding anticipated intake opening deformation to the intake opening size determined by sieve analysis.

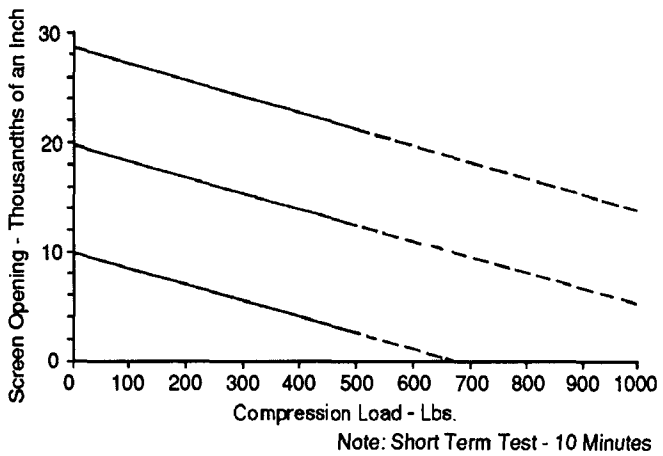

Figure 51. Static compression results of Teflon* screen (Dablow et al., 1988).
***Dupont's registered trademark for its fluorocarbon resin**

According to Dablow et al. (1988), a recommended construction procedure to minimize compressive stress problems is to keep the casing string suspended in the borehole so that the casing is in tension and to backfill the annulus around the casing while it remains suspended. This procedure reduces compressive stress by supplying support on the outer wall of the casing. This can only be accomplished successfully in relatively shallow wells in which the long-term tensile strength of the fluoropolymer casing is sufficient to withstand tensile stresses imposed on the casing by suspending it in the borehole. Additionally, continuous suspension of casing in the borehole is not possible with hollow-stem auger installations.

The third area of concern in fluoropolymer well casing installation is the extreme flexibility of the casing string. Although easy solutions exist to avoid problems, the flexibility otherwise could cause the casing to become bowed and non-plumb when loaded, and the resulting deformation could cause difficulties in obtaining samples or accurate water levels from these wells. Dablow et al. (1988) suggest three means of avoiding flexibility problems: 1) suspending the casing string in the borehole during backfilling (as discussed above); 2) using casing centralizers; or 3) inserting a rigid PVC or steel pipe temporarily inside the fluoropolymer casing during backfilling.

Metallic Materials —

Metallic well casing and screen materials available for use in monitoring wells include carbon steel, low carbon steel,

galvanized steel and stainless steel. Well casings made of any of these metallic materials are generally stronger, more rigid and less temperature sensitive than thermoplastics, fluoropolymer or fiberglass-reinforced epoxy casing materials. Table 26 describes dimensions, hydraulic collapse pressure, burst pressure and unit weight of stainless steel casing. The strength and rigidity capabilities of metallic casing materials are sufficient to meet virtually any subsurface condition encountered in a ground-water monitoring situation. However, metallic materials are subject to corrosion during long-term exposure to certain subsurface geochemical environments.

Corrosion of metallic well casings and well intakes can both limit the useful life of the monitoring well installation and result in ground-water sample analytical bias. It is important, therefore, to select both casing and screen that are fabricated of corrosion-resistant materials.

Corrosion is defined as the weakening or destruction of a material by chemical action. Several well-defined forms of corrosive attack on metallic materials have been observed and defined. In all forms, corrosion proceeds by electrochemical action, and water in contact with the metal is an essential factor. According to Driscoll (1986), the forms of corrosion typical in environments in which well casing and well intake materials are installed include:

1) general oxidation or "rusting" of the metallic surface, resulting in uniform destruction of the surface with occasional perforation in some areas;
2) selective corrosion (dezincification) or loss of one element of an alloy, leaving a structurally weakened material;
3) bi-metallic corrosion, caused by the creation of a galvanic cell at or near the juncture of two different metals;
4) pitting corrosion, or highly localized corrosion by pitting or perforation, with little loss of metal outside of these areas; and
5) stress corrosion, or corrosion induced in areas where the metal is highly stressed.

To determine the potential for corrosion of metallic materials, the natural geochemical conditions must first be determined. The following list of indicators can help recognize potentially corrosive conditions (modified from Driscoll, 1986):

1) low pH -- if ground water pH is less than 7.0, water is acidic and corrosive conditions exist;
2) high dissolved oxygen content -- if dissolved oxygen content exceeds 2 milligrams per liter, corrosive water is indicated;
3) presence of hydrogen sulfide (H_2S) -- presence of H_2S in quantities as low as 1 milligram per liter can cause severe corrosion;
4) total dissolved solids (TDS) -- if TDS is greater than 1000 milligrams per liter, the electrical conductivity of the water is great enough to cause serious electrolytic corrosion;
5) carbon dioxide (CO) -- corrosion is likely if the CO_2 content of the water exceeds 50 milligrams per liter; and
6) chloride ion (Cl) content -- if Cl content exceeds 500 milligrams per liter, corrosion can be expected.

Combinations of any of these corrosive conditions generally increase the corrosive effect. However, no data presently exist on the expected life of steel well casing materials exposed to natural subsurface geochemical conditions.

Carbon steels were produced primarily to provide increased resistance to atmospheric corrosion. Achieving this

Table 26. Hydraulic Collapse and Burst Pressure and Unit Weight of Stainless Steel Well Casing (Dave Kill, Johnson Division, St. Paul, Minnesota, Personal Communication, 1985)

Nom. Size Inches	Schedule Number	Outside Diameter, Inches	Wall Thickness Inches	Inside Diameter Inches	Internal Cross-Sectional Area Sq. In.	Internal Pressure psi Test.	Internal Pressure psi Bursting	External Pressure psi Collapsing	Weight Pounds per Foot
2	5	2.375	0.065	2.245	3.958	820	4.105	896	1.619
	10	2.375	0.109	2.157	3.654	1.375	6.884	2.196	2.663
	40	2.375	0.154	2.067	3.356	1.945	9.726	3.526	3.087
	80	2.375	0.218	1.939	2.953	2.500	13.768	5.419	5.069
2 1/2	5	2.875	0.083	2.709	5.761	865	4.330	1.001	2.498
	10	2.875	0.120	2.635	5.450	1.250	6.260	1.905	3.564
	40	2.875	0.203	2.469	4.785	2.118	10.591	3.931	5.347
3	5	3.500	0.083	3.334	8.726	710	3.557	639	3.057
	10	3.500	0.120	3.260	8.343	1.030	5.142	1.375	4.372
	40	3.500	0.216	3.068	7.389	1.851	9.257	3.307	7.647
3 1/2	5	4.000	0.083	3.834	11.54	620	3.112	431	3.505
	10	4.000	0.120	3.760	11.10	900	4.500	1.081	5.019
	40	4.000	0.226	3.548	9.887	1.695	8.475	2.941	9.194
4	5	4.500	0.083	4.334	14.75	555	2.766	316	3.952
	10	4.500	0.120	4.260	14.25	800	4.000	845	5.666
	40	4.500	0.237	4.026	12.72	1.580	7.900	2.672	10.891
5	5	5.563	0.109	5.345	22.43	587	2.949	350	6.409
	10	5.563	0.134	5.295	22.01	722	3.613	665	7.842
	40	5.563	0.258	5.047	20.00	1.391	6.957	2.231	14.754
6	5	6.625	0.109	6.407	32.22	494	2.467	129	7.656
	10	6.625	0.134	6.357	31.72	606	3.033	394	9.376
	40	6.625	0.280	6.065	28.89	1.268	6.340	1.942	19.152

increased resistance requires that the material be subjected to alternately wet and dry conditions. In most monitoring wells, water fluctuations are not sufficient in either duration or occurrence to provide the conditions that minimize corrosion. Therefore, corrosion is a frequent problem. The difference between the corrosion resistance of carbon and low-carbon steels is negligible under conditions in which the materials are buried in soils or in the saturated zone; thus both materials may be expected to corrode approximately equally. Corrosion products include iron and manganese and trace metal oxides as well as various metal sulfides (Barcelona et al., 1983). Under oxidizing conditions, the principal products are solid hydrous metal oxides; under reducing conditions, high levels of dissolved metallic corrosion products can be expected (Barcelona et al., 1983). While the electroplating process of galvanizing improves the corrosion resistance of either carbon or low-carbon steel, in many subsurface environments the improvement is only slight and short-term. The products of corrosion of galvanized steel include iron, manganese, zinc and trace cadmium species (Barcelona et al., 1983).

The presence of corrosion products represents a high potential for the alteration of ground-water sample chemical quality. The surfaces on which corrosion occurs also present potential sites for a variety of chemical reactions and adsorption. These surface interactions can cause significant changes in dissolved metal or organic compounds in ground water samples (Marsh and Lloyd, 1980). According to Barcelona et al. (1983), even flushing the stored water from the well casing prior to sampling may not be sufficient to minimize this source of sample bias because the effects of the disturbance of surface coatings or accumulated corrosion products in the bottom of the well are difficult, if not impossible, to predict. On the basis of these observations, the use of carbon steel, low-carbon steel and galvanized steel in monitoring well construction is not considered prudent in most natural geochemical environments.

Conversely, stainless steel performs well in most corrosive environments, particularly under oxidizing conditions. In fact, stainless steel requires exposure to oxygen in order to attain its highest corrosion resistance; oxygen combines with part of the stainless steel alloy to form an invisible protective film on the surface of the metal. As long as the film remains intact, the corrosion resistance of stainless steel is very high. Recent work by Barcelona and Helfrich (1986; 1988) and Barcelona et al. (1988) suggest that biological activity may alter geochemistry near stainless steel wells. Iron bacteria may induce degradation of the well casing and screen.

Several different types of stainless steel alloys are available. The most common alloys used for well casing and screen are Type 304 and Type 316. Type 304 stainless steel is perhaps the most practical from a corrosion resistance and cost standpoint. It is composed of slightly more than 18 percent chromium and more than 8 percent nickel, with about 72 percent iron and not more than 0.08 percent carbon (Driscoll, 1986). The chromium and nickel give the 304 alloy excellent resistance to corrosion; the low carbon content improves weldability. Type 316 stainless steel is compositionally similar to Type 304 with one exception -- a 2 to 3 percent molybdenum content and a higher nickel content that replaces the equivalent percentage of iron. This compositional difference provides Type 316 stainless steel with an improved resistance to sulfur-containing species as well as sulfuric acid solutions (Barcelona et al., 1983). This means that Type 316 performs better under reducing conditions than Type 304. According to Barcelona et al. (1983), Type 316 stainless steel is less susceptible to pitting or pinhole corrosion caused by organic acids or halide solutions. However, Barcelona et al. (1983) also point out that for either formulation of stainless steel, long-term exposure to very corrosive conditions may result in corrosion and the subsequent chromium or nickel contamination of samples.

Thermoplastic Materials —

Thermoplastics are man-made materials that are composed of different formulations of large organic molecules. These formulations soften by heating and harden upon cooling and therefore can easily be molded or extruded into a wide variety of useful shapes including well casings, fittings and accessories.

The most common types of thermoplastic well casing are polyvinyl chloride (PVC) and acrylonitrile butadiene styrene (ABS). Casing made of these materials is generally weaker, less rigid and more temperature-sensitive than metallic casing materials. However, casing made of either types of plastic can usually be selected where the strength, rigidity and temperature resistance are generally sufficient to withstand stresses during casing handling, installation and earth loading (National Water Well Association and Plastic Pipe Institute, 1981). Thermoplastics also: 1) offer complete resistance to galvanic and electrochemical corrosion; 2) are light weight for ease of installation and reduced shipping costs; 3) have high abrasion resistance; 4) have high strength-to-weight ratios; 5) are durable in natural ground-water environments; 6) require low maintenance; 7) are flexible and workable for ease of cutting and joining and 8) are relatively low in cost.

Long-term exposures of some formulations of thermoplastics to the ultraviolet rays of direct sunlight and/or to low temperatures will cause brittleness and gradual loss of impact strength that may be significant. The extent of this degradation depends on the type of plastic, the extent of exposure and the susceptibility of the casing to mechanical damage (National Water Well Association and Plastic Pipe Institute, 1981). Many thermoplastic formulations now include protection against degradation by sunlight, but brittleness of casing, particularly during casing installation remains a problem. Above-ground portions of thermoplastic well casings should be suitably protected from breakage. Potential chemical problems are discussed in the following sections.

Polyvinyl chloride (PVC)—PVC plastics are produced by combining PVC resin with various types of stabilizers, lubricants, pigments, fillers, plasticizers and processing aids. The amounts of these additives can be varied to produce different PVC plastics with properties tailored to specific applications. PVC used for well casing is composed of a rigid unplasticized polymer formulation (PVC Type 1) that is strong and generally has good chemical resistance. However, several publications (e.g., Barcelona et al., 1983; Barcelona and Helfrich, 1988; and Nass, 1976) raised questions of chemical resistance to low molecular weight ketones, aldehydes and chlorinated solvents which may limit durability of the casing.

PVC materials are classified according to ASTM standard specification D-1785 that covers rigid PVC compounds (Ameri-

can Society for Testing and Materials, 1986). This standard categorizes rigid PVC by numbered cells designating value ranges for certain pertinent properties and characteristics including impact strength, tensile strength, rigidity (modulus of elasticity), temperature resistance (deflection temperature) and chemical resistance. ASTM standard specification F-480 covers thermoplastic water well casing pipe and couplings made in standard dimension ratios. This standard specifies that PVC well casing can be made from only a limited number of cell classification materials, predominantly PVC 12454-B, but also including PVC 12454-C and PVC 14333-C and D (American Society for Testing and Materials, 1981). Minimum physical property values for these materials are given in Table 27. Hydraulic collapse pressure and unit weight for a range of PVC well casing diameters is given in Table 28.

Acrylonitrile butadiene styrene (ABS)--ABS plastics are produced from three different monomers: 1) acrylonitrile, 2) butadiene and 3) styrene. The ratio of the components and the way in which they are combined can be varied to produce plastics with a wide range of properties. Acrylonitrile contributes rigidity, impact strength, hardness, chemical resistance and heat resistance; butadiene contributes impact strength; styrene contributes rigidity, gloss and ease of manufacturing (National Water Well Association arid Plastic Pipe Institute, 19181). ABS used for well casing is a rigid, strong unplasticized polymer formulation that has good heat resistance and impact strength.

Two ABS material types are used for well casings: 1) a higher strength, high rigidity, moderate impact resistance ABS and 2) a lower strength and rigidity, high impact strength ABS. These two materials are identified as cell class 434 and 533, respectively by ASTM standard specification F-480 (American Society for Testing and Materials, 1981). Minimum physical property values for ABS well casing are given in Table 27. The high temperature resistance and the ability of ABS to retain other properties better at high temperatures is an advantage in wells in which grouting causes a high heat of hydration. Hydraulic collapse pressure for a range of ABS well casing diameters is given in Table 29.

General strength/chemical resistance and/or interference characteristics--The tensile strength of thermoplastics is relatively low in comparison to metallic materials, but the developed string loading is not a limiting factor because the thermoplastic well casing is lighter weight than metallic materials. Table 27 shows the physical properties of thermoplastic well casing materials. The tensile strength, which in part determines the length of casing string that can be suspended in the borehole is relatively large. According to calculations by the National Water Well Association and Plastic Pipe Institute (1981), permissible casing string lengths even in unsaturated boreholes exceed the typical borehole depths of monitoring wells. In boreholes where the casing is partially immersed, casing string length is even less of a problem because the thermoplastics are low in density and therefore relatively buoyant.

With respect to chemical resistance, thermoplastic well casing materials are non-conductors and therefore do not corrode either electrochemically or galvanically like metallic materials. In addition, thermoplastics are resistant to biological attack and to chemical attack by soil, water and other naturally-occurring substances present in the subsurface (National Water Well Association and Plastic Pipe Institute, 1981). However, thermoplastics are susceptible to chemical attack by high concentrations of certain organic solvents, and long term exposure to lower levels has as yet undocumented effects. This physical degradation of a plastic by an organic solvent is called solvation. Solvent cementing of thermoplastic well casings is based on solvation. Solvation occurs in the presence of very high concentrations of specific organic solvents. If these solvents, which include tetrahydrofuran (THF), methyl ethyl ketone (MEK), methyl isobutyl ketone (MIBK) and cyclohexanone, are present in high enough concentrations, the solvents can be expected to chemically degrade thermoplastic well casing. However, the extent of this degradation is not known. In general, the chemical attack on the thermoplastic polymer matrix is enhanced as the organic content of the solution with which it is in contact increases.

Barcelona et al. (1983) and the Science Advisory Board of the U.S. EPA list the groups of chemical compounds that may cause degradation of the thermoplastic polymer matrix and/or the release of compounding ingredients that otherwise will remain in the solid material. These chemical compounds include: 1) low molecular weight ketones, 2) aldehydes, 3) amines and 4) chlorinated alkenes and alkanes. Recent reports of creosotes and petroleum distillates causing disintegration of PVC casing support Barcelona's findings. There is currently a lack of information regarding critical concentrations of these chemical compounds at which deterioration of the thermoplastic material is significant enough to affect either the structural integrity of the material or the ground-water sample chemical quality.

Among the potential sources of chemical interference in thermoplastic well casing materials are the basic monomers from which the casing is made and a variety of additives that may be used in the manufacture of the casing including plasticizers, stabilizers, fillers, pigments and lubricants. The propensity of currently available information on potential contamination of water that cornes in contact with rigid thermoplastic materials relates specifically to PVC; no information is currently available on ABS or on other similar thermoplastics. Therefore, the remainder of this discussion relates to potential chemical interference effects from PVC well casing materials.

Extensive research has been conducted in the laboratory and in the field, specifically on water supply piping, to evaluate vinyl chloride monomer migration from new and old PVC pipe. The data support the conclusion that when PVC is in contact with water, the level of trace vinyl chloride migration from PVC pipe is extremely low compared to residual vinyl chloride monomer (RVCM) in PVC pipe. Since 1976, when the National Sanitation Foundation established an RVCM monitoring and control program for PVC pipe used in potable water supplies and well casing, process control of RVCM levels in PVC pipe has improved markedly. According to Barcelona et al. (1983), the maximum allowable level of RVCM in NSF-certified PVC products (less than or equal to 10 ppm RVCM) limits potential leached concentrations of vinyl chloride monomer to 1 to 2 micrograms per liter. Leachable amounts of vinyl chloride monomer should decrease as RVCM levels in products continue to be reduced. Although the potential for analytical interference exists even at the low micrograms per-liter level at which vinyl

Table 27. Typical Physical Properties of Thermoplastic Well Casing Materials at 73.4° (National Water Well Association and Plastic Pipe Institute, 1981)

Property	ASTM Test Method	Cell Class, per D-1788 434	533	PVC Cell Class, per D-1784 12454-B & C	14333-C & D
Specific Gravity	D-792	1.05	1.04	1.40	1.35
Tensile Strength, lbs. /in.^{2}	D-638	6,000*	5,000*	7,000*	6,000*
Tensile Modulus of Elasticity, lbs./in.^{2}	D-638	350,000	250,000	400,000*	320,000*
Compressive Strength, lbs./in.^{2}	D-695	7,200	4,500	9,000	8,000
Impact Strength, Izod, ft. -lb/inch notch	D-256	4.0*	6.0*	0.65	5.0
Deflection Temperature Under Load (264 psi), °F	D-648	190*	190*	158*	140*
Coefficent of Linear Expansion, in./in. - °F	D-696	5.5 X10^{-5}	6.0 X 10^{-5}	3.0 X10^{-5}	5.0 X10^{-5}

* These are minimum values set by the corresponding ASTM Cell Class designation. All others represent typical values.

Table 28. Hydraulic Collapse Pressure and Unit Weight of PVC Well Casing (National Water Well Association and Plastic Pipe Institute, 1981)

Outside Diameter (Inches) Nom.	Actual	SCH*	Wall Thickness Min. (in.)	DR**	Weight in Air (lbs/100 feet) PVC 12454	PVC14333	Weight in Water (lbs/100 feet) PVC 12454	PVC 14333	Hydraulic Collapse Pressure (psi) PVC 12454	PVC 14333
2	2.375	SCH 80	0.218	10.9	94	91	27	24	947	758
		SCH 40	0.154	15.4	69	66	20	17	307	246
2 1/2	2.875	SCH 80	0.276	10.4	144	139	41	36	1110	885
		SCH 40	0.203	14.2	109	105	31	27	400	320
3	3.500	SCH 80	0.300	11.7	193	186	55	48	750	600
		SCH 40	0.216	16.2	143	138	41	36	262	210
3 1/2	4.000	SCH 80	0.316	12.6	235	227	67	59	589	471
		SCH 40	0.226	17.7	172	176	49	43	197	158
4	4.500	SCH 80	0.337	13.3	282	272	80	70	494	395
		SCH 40	0.237	19.0	203	196	58	51	158	126
4 1/2	4.950	-	0.248	20.0	235	226	67	58	134	107
		-	0.190	26.0	182	176	52	46	59	47
5	5.563	SCH 80	0.375	14.5	391	377	112	98	350	280
		SCH 40	0.258	21.6	276	266	79	69	105	84
6	6.625	SCH 80	0.432	15.3	538	519	154	134	314	171
		SCH 40	0.280	23.7	358	345	102	89	78	62

* Schedule

Table 29. Hydraulic Collapse Pressure and Unit Weight of ABS Well Casing (National Water Well Association and Plastic Pipe Institute, 1981)

Outside Diameter (Inches) Nom.	Actual	SCH*	Wall Thickness Min. (in.)	DR**	Weight in Air (lbs/100 feet) ABS 434	ABS 533	Weight in Water (lbs/100 feet) ABS 434	ABS 533	Hydraulic Collapse Pressure (psi) ABS 434	ABS 533
2	2.375	SCH 80	0.218	10.9	71	70	3.4	2.7	829	592
		SCH 40	0.154	15.4	52	51	2.5	2.0	269	192
2 1/2	2.875	SCH 80	0.276	10.4	108	107	5.1	4.1	968	691
		SCH 40	0.203	14.2	82	81	3.9	3.1	350	250
3	3.500	SCH 80	0.300	11.7	145	144	6.9	5.5	656	468
		SCH 40	0.216	16.2	107	106	5.1	4.1	229	164
3 1/2	4.000	SCH 80	0.318	12.6	176	175	8.4	6.7	515	368
		SCH 40	0.226	17.7	129	128	6.1	4.9	173	124
4	4.500	SCH 80	0.337	13.3	211	209	10.0	8.0	432	308
		SCH 40	0.237	19.0	152	151	7.2	5.8	138	98
5	5.563	SCH 80	0.375	14.8	294	291	14.0	11.2	306	218
		SCH 40	0.258	21.6	207	205	9.8	7.9	92	66
6	6.250	SCH 80	0.432	15.3	404	400	19.2	15.4	275	196
		SCH 40	0.280	23.7	268	266	12.8	10.2	69	49

chloride monomer may be found in a solution in contact with PVC, the significance of this interference is not currently known.

With few exceptions, plasticizers are not added to PVC formulations used for well casing because the casing must be a rigid material. Even if plasticizers were added, levels would not be expected to exceed 0.01 percent (Barcelona et al., 1983). By contrast, flexible PVC tubing may contain from 30 to 50 percent plasticizers by weight. The presence of these high levels of plasticizers in flexible PVC tubing has been documented to produce significant chemical interference effects by several researchers (Barcelona et al., 1985b; Barcelona, 1984; Barcelona et al., 1983; Junk et al., 1974). However, at the levels present in rigid well casing, plasticizers were not reported to pose a chemical interference problem.

Rigid PVC may contain other additives, primarily stabilizers, at levels approaching 5 percent by weight. Some representative chemical classes of additives that have been used in the manufacture of rigid PVC well casing are listed in Table 30. Boettner et al. (1981) determined through a laboratory study that several of the PVC heat stabilizing compounds, notably dimethyltin and dibutyltin species, could potentially leach out of rigid PVC at very low (low to sub micrograms per liter) levels. These levels decreased dramatically over time. Factors that influenced the leaching process in this study included solution pH, temperature and ionic composition; and exposed surface area and surface porosity of the pipe material. It is currently unclear what impact, if any, the leaching of low levels of organotin compounds may have on analytical interference.

In addition to setting a limit on RVCM, the National Sanitation Foundation has set specifications for certain chemical constituents in PVC formulations. The purpose of these specifications as outlined in NSF Standard 14 (National Sanitation Foundation, 1988) is to control the amount of chemical additives in both PVC well casing and pipe used for potable water supply. The maximum contaminant levels permitted in a standardized leach test on NSF-approved PVC products are given in Table 31. Most of these levels correspond to those set by the Safe Drinking Water Act for chemical constituents covered by the National Interim Primary Drinking Water Standards. Only PVC products that carry either the "NSF wc" (well casing) or "NSF pw" (potable water) designation have met the specifications set forth in Standard 14. Other non-NSF listed products may include in their formulation chemical additives not addressed by the specifications or may carry levels of the listed chemical parameters higher than permitted by the specifications. In all cases, the material used should be demonstrated to be compatible with the specific applications. For example, even though neither lead nor cadmium have been permitted as compounding ingredients in United States-manufactured NSF-listed PVC well casing since 1970, PVC manufactured in other countries may be stabilized with lead or cadmium compounds that have been demonstrated to leach from the PVC (Barcelona et al., 1983).

In other laboratory studies of leaching of PVC well casing material chemical components into water, Curran and Tomson (1983) and Parker and Jenkins (1986) determined that little or no leaching occurred. In the former study, it was found when testing several different samples (brands) of rigid PVC well casing that trace organics either were not leached or were leached only at the sub-micrograms per liter level. In the latter study, which was conducted using ground water in contact with two different brands of PVC, it was concluded that no chemical constituents were leached at sufficient concentrations to interfere with reversed-phase analysis for low micrograms per liter levels of 2,4,6 trinitrotoluene (TNT), hexahydro-1,3,5-trinitro-1,3,5-triazine (RDX), octahydro-1,3,5,7-tetranitro-1,3,5,7-tetrazocine (HMX) or 2,4 dinitrotoluene (DNT) in solution. The study by Curran and Tomson (1983) confirmed previous field work at Rice University (Tomson et al., 1979) that suggested that PVC well casings did not leach significant amounts (i.e. at the sub-micrograms per liter level) of trace organics into sampled ground water.

Another potential area for concern with respect to chemical interference effects is the possibility that some chemical constituents could be sorbed by PVC well casing materials. Miller (1982) conducted a laboratory study to determine whether several plastics, including rigid PVC well casing, exhibited any tendency to sorb potential contaminants from solution. Under the conditions of his test, Miller found that PVC moderately sorbed tetrachloroethylene and strongly sorbed lead, but did not sorb trichlorofluoromethane, trichloroethylene, bromoform, 1,1,1-trichloroethane, 1,1,2-trichloroethane or chromium. In this experiment, sorption was measured weekly for six weeks and compared to a control; maximum sorption of tetrachloroethylene occurred at two weeks. While Miller (1982) attributed these losses of tetrachloroethylene and lead strictly to sorption, the anomalous behavior of tetrachloroethylene compared to that for other organics of similar structure (i.e., trichloroethlyene) is not explained. In a follow-up study to determine whether or not the tetrachloroethylene could be desorbed and recovered, only a small amount of tetrachloroethylene was desorbed. Thus, whether or not strong sorption or some other mechanism (i.e., enhanced biodegradation in the presence of PVC) accounts for the difference is not clear (Parker and Jenkins, 1986). In the laboratory study by Parker and Jenkins (1986), it was found that significant losses of TNT and HMX from solution occurred in the presence of PVC well casing. A follow-up study to determine the mechanism for the losses attributed the losses to increased microbial degradation rather than to sorption. These results raise questions regarding whether or not losses found in other laboratory or even field studies that did not consider biodegradation as a loss mechanism could be attributed to biodegradation rather than to sorption.

In another laboratory study, Reynolds and Gillham (1985) found that sorption of selected organics (specifically 1,1,1-trichloroethane, 1,1,2,2-tetrachloroethane, bromoform, hexachloroethane and tetrachloroethylene) onto PVC and other polymeric well casing materials could be a significant source of bias to ground-water samples collected from water standing in the well. PVC was found to slowly sorb four of the five compounds studied (all except 1,1,1-trichloroethane), such that sorption bias would likely not be significant for the sorbed compounds if well development (purging the well of stagnant water) and sampling were to take place in the same day.

It is clear that with few exceptions the work that has been done to determine chemical interference effects of PVC well casing (whether by leaching from or sorbing to PVC of chemical constituents) has been conducted under laboratory condi-

tions. Furthermore, in most of the laboratory work the PVC has been exposed to a solution (usually distilled, deionized, or "organic-free" water) over periods of time ranging from several days to several months. Thus the PVC had a period of time in which to exhibit sorption or leaching effects. While this may be comparable to a field situation in which ground water was exposed to the PVC well casing as it may be between sampling rounds, few studies consider the fact that prior to sampling, the well casing is usually purged of stagnant water residing in the casing between sampling rounds. Thus, the water that would have been affected by the sorption or leaching effects of PVC would ideally have been removed and replaced with aquifer-quality water that is eventually obtained as "representative" of existing ground-water conditions. Because the sample is generally taken immediately after purging of stagnant water, the sampled water will have had a minimum of time with which to come in contact with casing materials and consequently be affected by sorption or leaching effects. Because of this, Barcelona et al. (1983) suggest that the potential sample bias due to sorptive interactions with well casing materials may be discounted. They point out that these effects are far more critical in sample transfer and storage procedures employed prior to sample separation or analysis. Nevertheless, other researchers do not agree that purging avoids casing effects especially for wells that recover slowly and thereby allow ample time for surface reactions to occur.

Composite Alternative Materials —

In certain conditions it may be advantageous to design a well using more than one material for well components. For example, where stainless steel or fluoropolymer materials are preferred in a specific chemical environment, considerable cost savings may be realized by using PVC in non-critical portions of the well. These savings may be considerable especially in deep wells where only the lower portion of the well has a critical chemical environment and tens of feet of lower-cost PVC may be used in the upper portion of the well. In composite well designs the use of dissimilar metallic components should be avoided unless an electrically isolating design is incorporated (United States Environmental Protection Agency, 1986).

Coupling Procedures for Joining Casing

Only a limited number of methods are available for joining lengths of casing or casing and screen together. The joining method depends on the type of casing and type of casing joint. Figure 52 illustrates some common types of joints used for

Table 30. Representative Classes of Additives in Rigid PVC Materials Used for Pipe or Well Casing (Barcelona et al., 1983)

(Concentration in wt. %)

Heat stabilizers (0.2-1.0%)	**Fillers (1-5%)**
Dibutyltin diesters of lauric and maleic acids	$CaCO_3$
Dibutyltin bis (laurylmercaptide)	diatomaceous earth
Dibutyltin-ß mercaptopropionate	clays
di-n-octyltin maleate	pigments
di-n-octyltin-S,S'-bis isoctyl mercaptoacetate	TiO_2
di-n-octyltin-ß mercaptopropionate	carbon black
Various other alkyltin compounds	iron and other metallic oxides
Various proprietary antimony compounds	
	Lubricants (1-5%)
	stearic acid
	calcium stearate
	glycerol monostearate
	montan wax
	polyethylene wax

Table 31. Chemical Parameters Covered by NSF Standard 14 (National Sanitation Foundation, 1988)

Parameter	**Maximum Permissible Level mg/L (ppm)**
Antimony (Sb)	0.050
Arsenic (As)	0.050[1]
Barium(Ba)	1.0[1]
Cadmium (Cd)	0.010[1]
Chromium (Cr)	0.050[1]
Lead(Pb)	0.020[1]
Mercury (Hg)	0.0020[1]
Phenolic substances	0.050
Residual vinyl chloride monomer (RVCM)	2.0
Selenium (Se)	0.010[1]
Total dissolved solids	70.0
Tin (Sn)	0.050
Total trihalomethanes (TTHM)	0.10
Taste and Odor Evaluations	
Characteristic	Permissible Level
Odor	Cold application 40
	Hot application 50
Taste	Satisfactory

[1] Established in the U.S. EPA National Primary Drinking Water Regulations.
*In the finished product ppm (mg/kg).

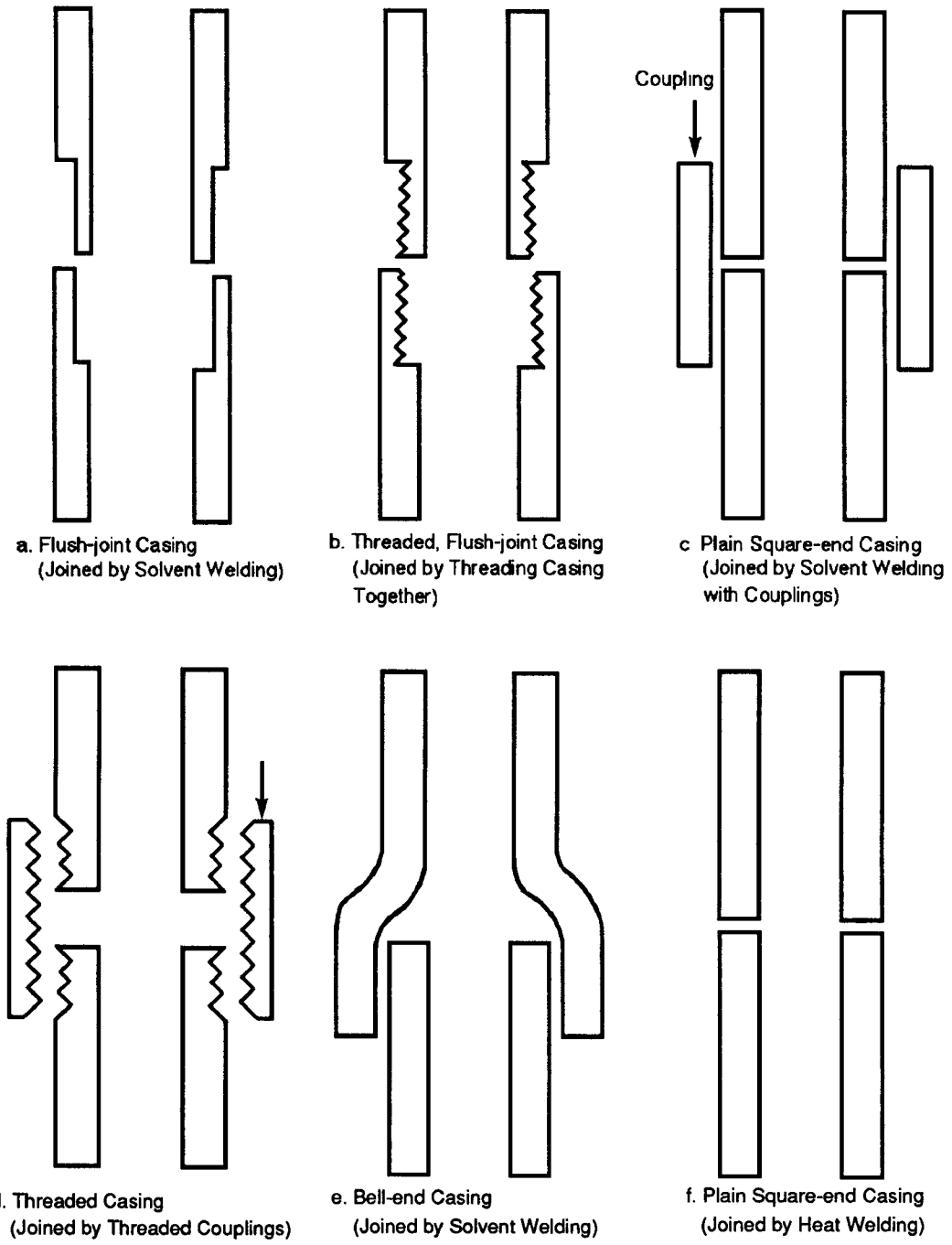

Figure 52. Types of joints typically used between casing lengths.

assembling lengths of casing. Flush-joint, threaded flush-joint, plain square-end and bell-end casing joints are typical of joints available for plastic casing; threaded flush-joint, bell-end and plain square end casing joints are typical of joints available for metallic casing.

Fluoropolymer Casing Joining —

Because fluoropolymers are inert to chemical attack or solvation even by pure solvents, solvent welding cannot be used with fluoropolymers. Similar to thermoplastic casing joining techniques, threaded joints wrapped with fluoropolymer tape are preferred.

Metallic Casing Joining —

There are generally two options available for joining metallic well casings: 1) welding via application of heat or 2) threaded joints. Both methods produce a casing string with a relatively smooth inner and outer diameter. With welding, it is generally possible to produce joints that are as strong or stronger than the casing, thereby enhancing the tensile strength of the casing string. The disadvantages of welding include: 1) greater assembly time, 2) difficulty in properly welding casing in the vertical position, 3) enhancement of corrosion potential in the vicinity of the weld and 4) the danger of ignition of

potentially explosive gases that may be present. Because of these disadvantages, threaded joints are more commonly used with metallic casing and screen. Threaded joints provide inexpensive, fast and convenient connections and greatly reduce potential problems with chemical resistance or interference (due to corrosion) and explosive potential. Wrapping the male threads with fluoropolymer tape prior to joining sections improves the watertightness of the joint. One disadvantage to using threaded joints is that the tensile strength of the casing string is reduced to approximately 70 percent of the casing strength. This reduction in strength does not usually pose a problem because strength requirements for small diameter wells typical of monitoring installations are not as critical and because metallic casing has a high initial tensile strength.

Thermoplastic Casing Joining —

There are two basic methods for joining sections of thermoplastic well casing: 1) solvent cementing and 2) mechanical joining. Both methods should maintain a uniform inner and outer casing diameter in monitoring well installations. An inconsistent inner diameter causes problems when tight-fitting downhole equipment (development tools, sampling or purging devices, etc.) is used; an uneven outer diameter creates problems with filter pack and annular seal placement. The latter problem tends to promote water migration at the casing/seal interface to a greater degree than is experienced with uniform outerdiameter casing (Morrison, 1984).

Solvent cementing--In solvent cementing, a solvent primer is generally used to clean the two pieces of casing to be joined and a solvent cement is then spread over the cleaned surface areas. The two sections are assembled while the cement is wet. This allows the active solvent agent(s) to penetrate and soften the two casing surfaces that are joined. As the cement cures, the two pieces of casing are fused together; a residue of chemicals from the solvent cement remains at the joint. There are many different formulations of solvent cement for thermoplastics, but most cements consist of two or more of the following organic chemical constituents: tetrahydrofuran (THF), methyl ethyl ketone (MEK), methyl isobutyl ketone (MIBK), cyclohexanone and dimethylformamide (Sosebee et al., 1983).

The cements used in solvent welding, which are themselves organic chemicals, can have an impact on the integrity of ground-water samples. Sosebee et al. (1983) demonstrated that the aforementioned volatile organic solvents do contaminate ground-water samples collected from monitoring wells in which PVC adhesives are used to join well casing sections. Barcelona et al. (1983) noted that even minimal solvent cement application is sufficient to supply consistent levels of primer/cement components above 100 micrograms per liter in ground-water samples despite proper well development and flushing prior to sampling. They further point out that these effects may persist for months after well construction and even after repeated attempts to develop the wells. Dunbar et al. (1985) cited a case in which THF was found at levels ranging from 10 to 200 milligrams per liter in samples taken from several PVC-cased monitoring wells in which PVC solvent cement was used. These levels were found more than two years after the casing was installed. In samples from adjacent monitoring wells in which threaded PVC casing was used, no THF was found, prompting the conclusion that the THF concentrations were a relict of solvent cement used during well construction. The results of these studies point out that solvent cementing is not appropriate for use in joining sections of thermoplastic casing used in ground-water monitoring wells.

Mechanical joining--The most common method of mechanical joining is by threaded connections. Molded and machined threads are available in a variety of thread configurations including: acme, buttress, standard pipe thread and square threads. Because most manufacturers have their own thread type, threaded casing may not be compatible between manufacturers. If the threads do not match and a joint is made, the joint can fail or leak either during or after casing installation.

Because all joints in a monitoring well casing must be watertight, the extent of tightening of joints should comply with recommendations by the manufacturer. Overtightening of casing joints can lead to structural failure of the joint (National Water Well Association and Plastic Pipe Institute, 1981).

When using thermoplastic well casing, threaded joints are preferred; any problems associated with the use of solvent primers and cements can thus be avoided. Casing with threads machined or molded directly onto the pipe (without use of larger-diameter couplings) provides a flush joint between both inner and outer diameters. Because the annular space is frequently only minimal, casings that do not use couplings are best suited to use in monitoring well construction. Although this type of joint reduces the tensile strength of the casing string by about 30 percent as compared to a solvent-cemented joint, in most monitoring well installations this is not a critical concern. Where threaded joints are used, fluoropolymer tape is often wrapped around the threads prior to joining male and female sections to maximize the watertightness of the joint.

Well Casing Diameter

While casing outside diameters are standardized, variations in wall thickness cause casing inside diameters to vary. In "scheduled" casing, wall thickness increases as the scheduling number increases for any given diameter of casings. As illustrated by Figure 53, nominal 2-inch casing is a standard 2.375 inches outside diameter; wall thicknesses vary from 0.065 inch for schedule 5 to 0.218 inch for schedule 80. This means that inside diameters for nominal 2-inch casing vary from 2.245 inches for schedule 5 thin-walled casing (typical of stainless steel) to only 1.939 inches for schedule 80 thick-walled casing (typical of PVC). Wall thickness also changes with pipe diameter in scheduling. Another method of evaluating casing strength is by standard dimension ratios (SDR). A SDR is the ratio of the wall thickness to the casing diameter. The ratio is referenced to an internal pounds per square inch (psi) pressure rating such that all casings with a similar SDR will have a similar psi rating. Where strength of casing is important, scheduling and SDR numbers provide a means for choosing casing.

Although the diameter of the casing for a monitoring well depends on the purpose of the well, the casing size is generally selected to accommodate downhole equipment. Additional casing diameter selection criteria include: 1) drilling or well installation method used, 2) anticipated depth of the well and associated strength requirements, 3) ease of well development, 4) volume of water required to be purged prior to sampling (Table 32), 5) rate of recovery of the well after purging and 6)

Tabe 32. Volume of Water in Casing or Borehole (Driscoll, 1986)

Diameter of Casing or Hole (In)	Gallons per foot of Depth	Cubic Feet per Foot of Depth	Liters per Meter of Depth	Cubic Meters per Meter of Depth
1	0.041	0.0055	0.509	0.509×10^{-3}
1 1/2	0.092	0.0123	1.142	1.142×10^{-3}
2	0.163	0.0218	2.024	2.024×10^{-3}
2 1/2	0.255	0.0341	3.167	3.167×10^{-3}
3	0.367	0.0491	4.558	4.558×10^{-3}
3 1/2	0.500	0.0668	6.209	6.209×10^{-3}
4	0.653	0.0873	8.110	8.110×10^{-3}
4 1/2	0.826	0.1104	10.26	10.26×10^{-3}
5	1.020	0.1364	12.67	12.67×10^{-3}
5 1/2	1.234	0.1650	15.33	15.33×10^{-3}
6	1.469	0.1963	18.24	18.24×10^{-3}
7	2.000	0.2673	24.84	24.84×10^{-3}
8	2.611	0.3491	32.43	32.43×10^{-3}
9	3.305	0.4418	41.04	41.04×10^{-3}
10	4.080	0.5454	50.67	50.67×10^{-3}
11	4.937	0.6600	61.31	61.31×10^{-3}
12	5.875	0.7854	72.96	72.96×10^{-3}
14	8.000	1.069	99.35	99.35×10^{-3}
16	10.44	1.396	129.65	129.65×10^{-3}
18	13.22	1.767	164.18	164.18×10^{-3}
20	16.32	2.182	202.68	202.68×10^{-3}
22	19.75	2.640	245.28	245.28×10^{-3}
24	23.50	3.142	291.85	291.85×10^{-3}
26	27.58	3.687	342.52	342.52×10^{-3}
28	32.00	4.276	397.41	397.41×10^{-3}
30	36.72	4.909	456.02	456.02×10^{-3}
32	41.78	5.585	518.87	518.87×10^{-3}
34	47.16	6.305	585.68	585.68×10^{-3}
36	52.88	7.069	656.72	656.72×10^{-3}

1 Gallon = .785 Liters
1 Meter = 3.281 Feet
1 Gallon Water Weighs 8.33 lbs. = 3.785 Kilograms
1 Liter Water Weighs 1 Kilogram = 2.205 lbs.
1 Gallon per foot of depth = 12.419 liters per foot of depth
1 Gallon per meter of depth = 12.419×10^{-3} cubic meters per meter of depth

cost. For an additional discussion of casing diameter, refer to the sections entitled "Equipment that the Well Must Accommodate" and "Description and Selection of Drilling Methods."

Casing Cleaning Requirements

During the production of any casing material, chemical substances are used to assist in the extrusion, molding, machining and/or stabilization of the casing material. For example, oils and solvents are used in many phases of steel casing production. In the manufacturing of PVC well casing, a wax layer can develop on the inner wall of the casing; additionally, protective coatings of natural or synthetic waxes, fatty acids or fatty acid esters may be added to enhance the durability of the casing (Barcelona et al., 1983). These substances are potential sources of chemical interference and therefore must be removed prior to installation of the casing in the borehole. If trace amounts of these materials still adhere to the casing after installation, the chemical integrity of samples taken from the monitoring well can be affected.

Careful pre-installation cleaning of casing materials must be conducted to avoid potential chemical interference problems from the presence of substances such as cutting oils, cleaning solvents, lubricants, threading compounds, waxes and/or other chemical residues. For PVC, Curran and Tomson (1983) suggest washing the casing with a strong detergent solution and then rinsing with water before installation. Barcelona et al. (1983) and Barcelona (1984) suggest this same procedure for all casing materials. To accomplish the removal of some cutting oils, lubricants or solvents, it may be necessary to steam-clean casing materials or employ a high-pressure hot water wash. Casing materials must also be protected from contamination while they are on-site awaiting installation in the borehole. This can be accomplished by providing a clean storage area away from any potential contaminant sources (air, water or soil) or by using plastic sheeting spread on the ground for temporary storage adjacent to the work area. An additional discussion on decontamination of equipment can be found in the section entitled, "Decontamination."

Casing Cost

As Scalf et al. (1981) point out, the dilemma for the field investigator often is the relationship between cost and accuracy. The relative cost of PVC is approximately one tenth the cost of fluoropolymer materials. Cost is always a consideration for any ground-water monitoring project and becomes increasingly important as the number and/or depth of the wells increases. However, if the particular components of interest in a monitoring program are also components of the casing, then the results that are potentially attributable to the casing will be suspect. If the contaminants to be determined are already defined and they do not include chemical constituents that could potentially leach from or sorb onto PVC well casing (as defined by laboratory studies), it may be possible to use PVC as a less expensive alternative to other materials.

Monitoring Well Intakes

Proper design of a hydraulically efficient monitoring well in unconsolidated geologic materials and in certain types of poorly-consolidated geologic materials requires that a well intake be placed opposite the zone to be monitored. The intake should be surrounded by materials that are coarser; have a uniform grain size; and have a higher permeability than natural formation material. This allows ground water to flow freely into the well from the adjacent formation material while minimizing or eliminating the entrance of fine-grained materials (clay, silt, fine sand) into the well. When the well is properly designed and developed, the well can provide ground-water samples that are free of suspended solids. Sediment-free water reduces the potential for interference in sample analyses and eliminates or reduces the need for field sample filtration.

These purposes can be accomplished by designing the well in such a way that either the natural coarse-grained formation materials or artificially introduced coarse-grained materials, in conjunction with appropriately sized intake (well screen) openings, retain the fine materials outside the well while permitting water to enter (United States Environmental Protection Agency, 1975). Thus, there are two types of wells and well intake designs for wells installed in unconsolidated or poorly-consolidated geologic materials: naturally developed wells and wells with an artificially introduced filter pack. In both types of wells, the objective of a filter pack is to increase the effective diameter of the well and to surround the well intake with an envelope of relatively coarse material of greater permeability than the natural formation material.

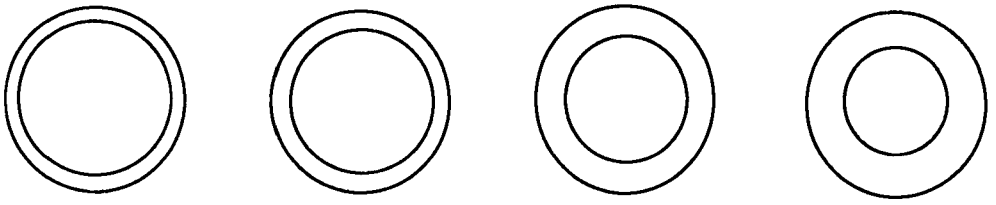

Schedule 5 (Stainless Steel) | Schedule 10 (Stainless Steel) | Schedule 40 (Stainless Steel, PVC, Fluoropolymer) | Schedule 80 (PVC, Fluoropolymer)

Wall Thickness (Inches)	Sch 5	Sch 10	Sch 40	Sch 80	Outside Diameter (Standard)
Nominal 2	0.065	0.109	0.154	0.218	2.375
Nominal 3	0.083	0.120	0.216	0.300	3.500
Nominal 4	0.083	0.120	0.237	0.337	4.500
Nominal 5	0.109	0.134	0.258	0.375	5.563
Nominal 6	0.109	0.134	0.280	0.432	6.625
Inside Diameter	Sch 5	Sch 10	Sch 40	Sch 80	
Nominal 2	2.245	2.157	2.067	1.939	
Nominal 3	3.334	3.260	3.068	2.900	
Nominal 4	4.334	4.260	4.026	3.826	
Nominal 5	5.345	5.295	5.047	4.813	
Nominal 6	6.407	6.357	6.065	5.761	

Figure 53. Effect of casing wall thickness on casing inside and outside diameter.

In the construction of a monitoring well it is imperative that the natural stratigraphic setting be distorted as little as possible. This requires that the development of void space be minimized in unconsolidated formations. As a consequence, boreholes that are over-sized with regard to the casing and well intake diameter generally should be filter-packed. For example, where 2-inch diameter screens are installed in hollow-stem auger boreholes an artificial filter pack is generally recommended. This prevents the collapse of the borehole around the screen with the subsequent creation of void space and the loss of stratification of the formation. Collapse also frequently results in the failure of well seals emplaced on top of the collapsed zone, although well development prior to seal installation may help to minimize this potential problem.

Naturally-Developed Wells

In a naturally-developed well, formation materials are allowed to collapse around the well intake after it has been installed in the borehole. The high-permeability envelope of coarse materials is developed adjacent to the well intake in situ by removing the fine-grained materials from natural formation materials during the well development process.

As described in Driscoll (1986), the envelope of coarse-grained, graded material created around a well intake during the development process can be visualized as a series of cylindrical zones. In the zone adjacent to the well screen, development removes particles smaller than the screen openings leaving only the coarser material in place. Slightly farther away, some medium-sized grains remain mixed with coarse materials. Beyond that zone, the material gradually grades back to the original character of the water-bearing formation. By creating this succession of graded zones around the screen, development stabilizes the formation so that no further movement of fine-grained materials will take place and the well will yield sediment-free water at maximum capacity (Figure 54).

The decision on whether or not a well can be naturally developed is generally based on geologic conditions, specifically the grain-size distribution of natural formation materials in the monitored zone. Wells can generally be naturally developed where formation materials are relatively coarse-grained and permeable. Grain-size distribution is determined by conducting a sieve analysis of a sample or samples taken from the intended screened interval. For this reason, the importance of obtaining accurate formation samples cannot be overemphasized.

After the sample(s) of formation material is sieved, a plot of grain size versus cumulative percentage of sample retained on each sieve is made (Figure 55). Well intake opening sizes are then selected, based on this grain size distribution and specifically on the effective size and uniformity coefficient of the formation materials. The effective size is equivalent to the sieve size that retains 90 percent (or passes 10 percent) of the formation material (Figure 56); the uniformity coefficient is the ratio of the sieve size that will retain 40 percent (or pass 60 percent) of the formation material to the effective size (Figure 57). A naturally-developed well can be considered if the effective grain size of the formation material is greater than 0.01 inch and the uniformity coefficient is appropriate.

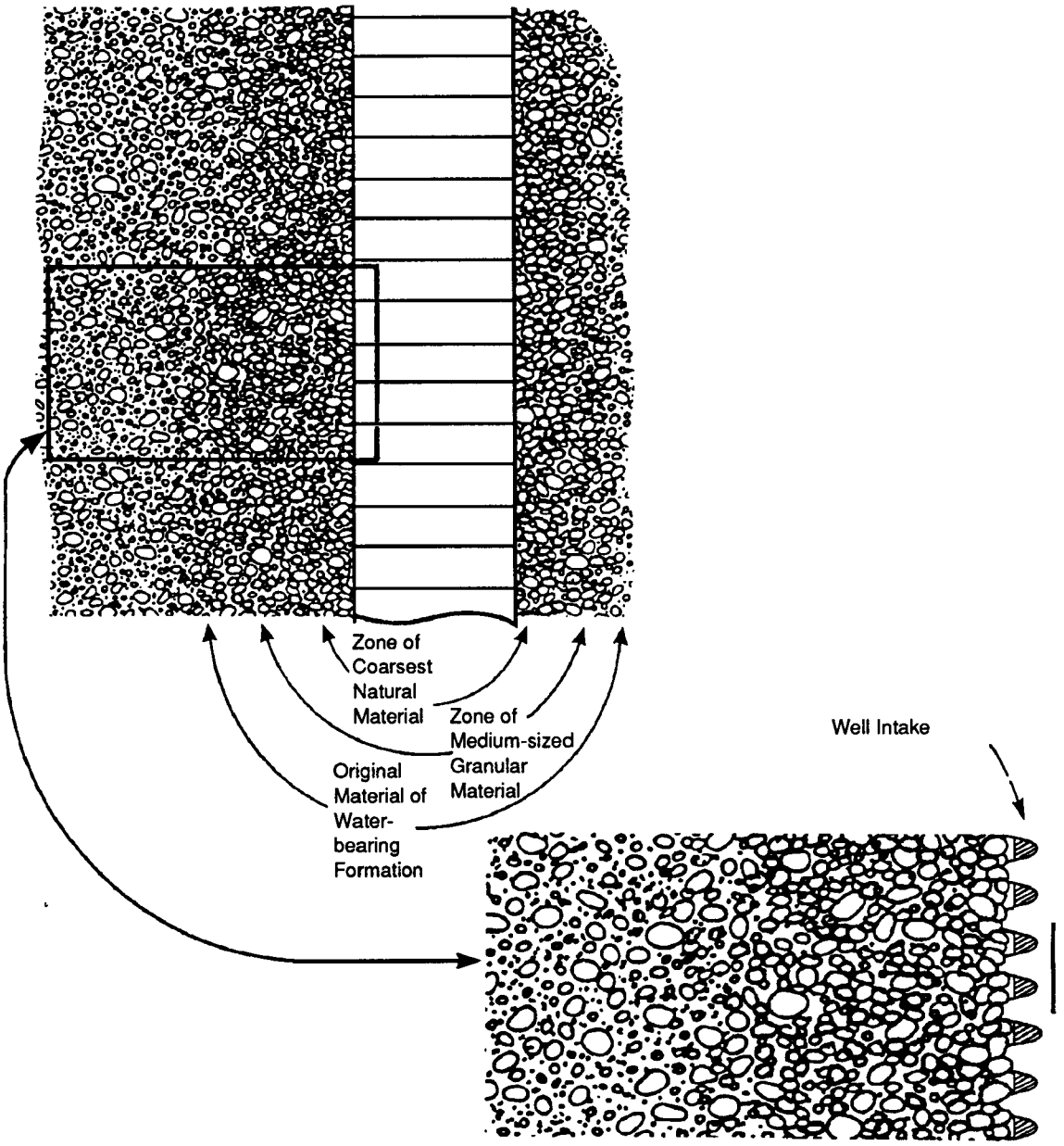

Figure 54. Envelope of coarse-grained material created around a naturally developed well.

In monitoring well applications, naturally-developed wells can be used where the maximum borehole diameter closely approximates the outside diameter of the well intake. By maintaining a minimum space between the well casing and the borehole face, the disturbance of natural stratigraphic conditions is minimized. If these conditions are not observed, the radius of disturbance reduces the probability that ambient flow conditions can be restored.

Artificially Filter-Packed Wells

When the natural formation materials surrounding the well intake are deliberately replaced by coarser, graded material introduced from the surface, the well is artificially filter packed. The term "gravel pack" is also frequently used to describe the artificial material added to the borehole to act as a filter. Because the term "gravel" is classically used to describe large-diameter granular material and because nearly all coarse material emplaced artificially in wells is an engineered blend of coarse to medium sand-sized material, the use of the terms "sand pack" or "filter pack" is preferred in this document. Gravel-sized particles are rarely used as filter pack material because gravel does not generally serve the intended function of a filter pack in a monitoring well.

The artificial introduction of coarse, graded material into the annular space between a centrally-positioned well intake and the borehole serves a variety of purposes. Similar to naturally-developed filter pack, the primary purpose of an artificial filter pack is to work in conjunction with the well intake to filter out fine materials from the formation adjacent to the well. In addition, the artificial filter pack stabilizes the borehole and minimizes settlement of materials above the well intake. The introduction of material coarser than the natural formation materials also results in an increase in the effective

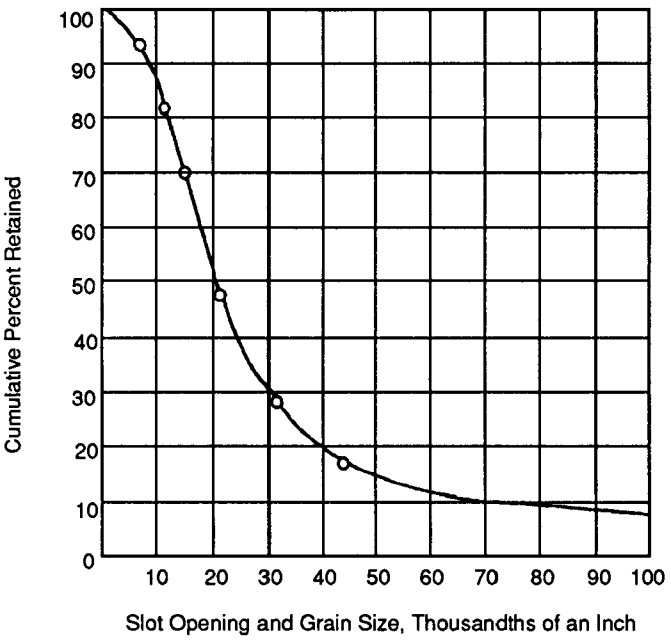

Figure 55. Plot of grain size versus cumulative percentage of sample retained on sieve.

diameter of the well and in an accompanying increase in the amount of water that flows toward and into the well (Figure 58).

There are several geologic situations where the use of an artificial filter pack material is recommended:

1) when the natural formation is uniformly fine-grained (i.e., fine sand through clay-sized particles);
2) when a long screened interval is required and/or the intake spans highly stratified geologic materials of widely varying grain sizes;
3) when the formation in which the intake will be placed is a poorly cemented (friable) sandstone;
4) when the formation is a fractured or solution-channeled rock in which particulate matter is carried through fractures or solution openings;
5) when the formation is shales or coals that will act as a constant supply of turbidity to any ground-water samples; and
6) when the diameter of the borehole is significantly greater than the diameter of the screen.

The use of an artificial filter pack in a fine-grained geologic material allows the intake opening (slot) size to be considerably larger than if the intake were placed in the formation material without the filter pack. This is particularly true where silts and clays predominate in the zone of interest and where fine opening sizes in well intakes to hold out formation materials are either impractical or not commercially available. The larger intake opening size afforded by artificial filter pack emplacement thus allows for the collection of adequate volumes of sediment-free samples and results in both decreased head loss and increased well efficiency.

Filter packs are particularly well-suited for use in extensively stratified formations where thin layers of fine-grained materials alternate with coarser materials. In such a geologic environment, it is often difficult to precisely determine the position and thickness of each individual stratum and to choose the correct position and opening size for a well intake. Completing the well with an artificial filter pack, sized and graded to suit the finest layer of a stratified sequence, resolves the latter problem and increases the possibility that the well will produce water free of suspended sediment.

Quantitative criteria exist with which decisions can be made concerning whether a natural or an artificial filter pack should be used in a well (Campbell and Lehr, 1973; United States Environmental Protection Agency, 1975; Williams, 1981; Driscoll, 1986). Generally the use of an artificial filter pack is recommended where the effective grain size of the natural formation materials is smaller than 0.010 inch and the uniformity coefficient is less than 3.0. California Department of Health Services (1986) takes a different approach and suggests that an artificial filter pack be employed if a sieve analysis of formation materials indicates that a slot size of 0.020 inches or less is required to retain 50 percent of the natural material.

Economic considerations may also affect decisions concerning the appropriateness of an artificial filter pack. Costs associated with filter-packed wells are generally higher than those associated with naturally developed wells, primarily because specially graded and washed sand must be purchased and transported to the site. Additionally, larger boreholes are necessary for artificially filter-packed wells (e.g., suggested minimum 6-inch diameter borehole for a 2-inch inside diameter well or 8-inch borehole for a 4-inch well).

An alternate design for the artificial filter pack is provided by the "pre-packed" well intake. There are two basic designs that are commercially available: 1) single-wall prepack and 2) double-wall prepack. The single-wall prepack is fabricated by bonding well-sorted siliceous grains onto a perforated pipe base. Epoxy-based bonds have been the most commonly used, although other types of bonding materials have also been employed. The double-wall prepack consists of an unbonded granular layer of well-sorted silica grains between two perforated casings. The advantage of the double-wall system is that it is extremely strong and should not have chemical questions from bonding agent used in single wall.

The advantages of prepack well intakes are: 1) ease of installation in either a stable borehole or within boreholes protected by auger flights or casing (by the pullback method) and 2) the ability if properly sized to provide filtration of even the finest formations, thereby effectively minimizing turbidity in otherwise "difficult if not impossible to develop formations." The disadvantages of this type of well intake are: 1) the bonding material for the single-wall design may create chemical interference; 2) wells with prepack screens are difficult to redevelop if plugging occurs; and 3) commercial availability of this design has been extremely variable through time. The single-wall epoxy-based well intake is presently available only on an import basis; the double-wall well intake is currently available from at least one domestic manufacturer.

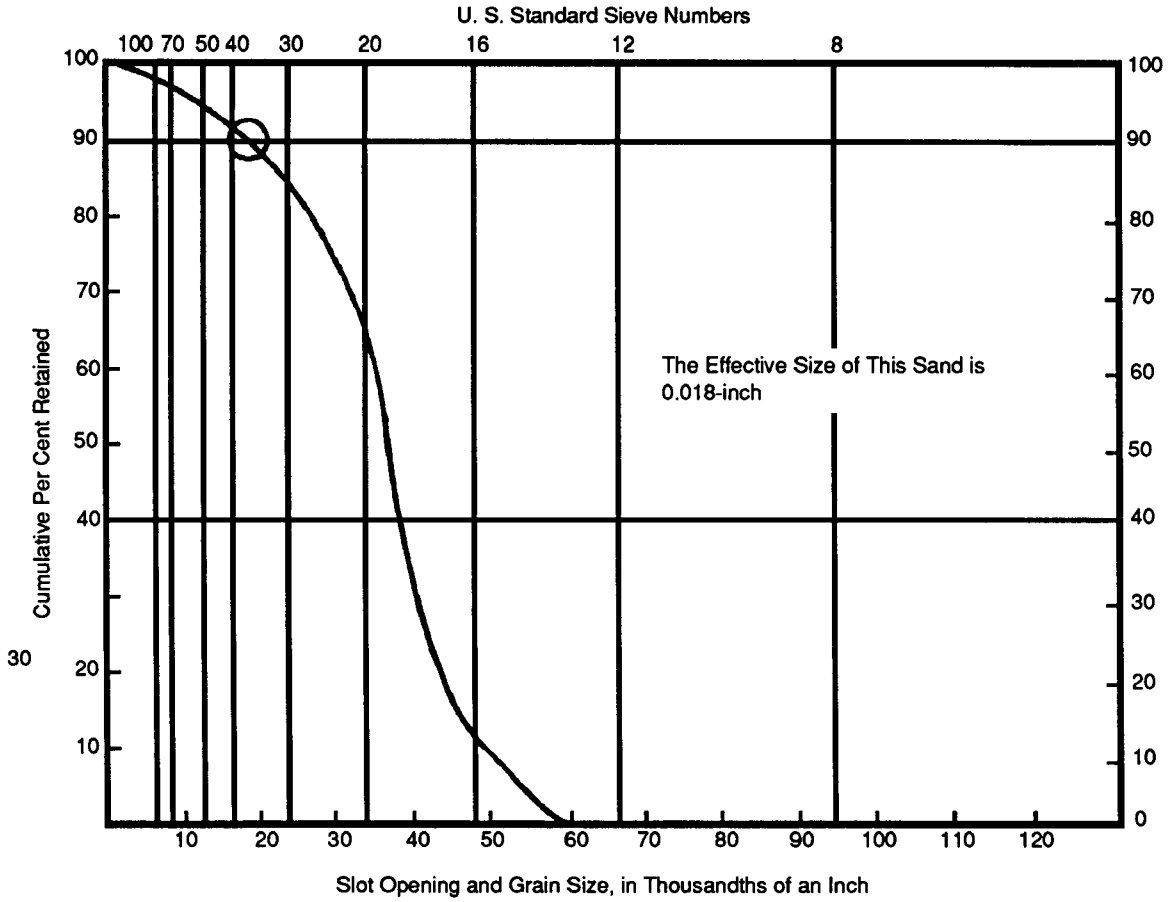

Figure 56. Determining effective size of formation materials.

Filter Pack Design —

Artificial filter pack design factors for monitoring wells include: 1) filter pack grain size; 2) intake opening (slot) size and length; 3) filter pack length, 4) filter pack thickness and 5) filter pack material type. When an artificial filter pack is dictated by sieve analysis or by geologic conditions, the filter pack grain sizes and well intake opening sizes are generally designed as a single unit.

The selection of filter pack grain size and well intake opening size is a function of the formation. The filter pack is designed first because it is the interface with the aquifer. The first step in designing the filter pack is to obtain samples of the formation intended to be monitored and perform sieve analyses on the samples. The filter pack material size is then selected on the basis of the finest formation materials present.

Although design techniques vary, all use the filter pack ratio to establish size differential between the formation materials and filter pack materials. Generally this ratio refers to either the average (50 percent retained) grain size of the formation material or the 70 percent retained size of the formation material. For example, Walker (1974) and Barcelona et al. (1985a) recommend using a uniform filter pack grain size that is 3 to 5 times the 50 percent retained size of the formation materials. Driscoll (1986) recommends a more conservative approach by suggesting that for fine-grained formations, the 50 percent retained size of the finest formation sample be multiplied by a factor of 2 to exclude the entrance of fine silts, sands and clays into the monitoring well. The United States Environmental Protection Agency (1975) recommends that filter pack grain size be selected by multiplying the 70 percent retained grain size of the formation materials by a factor between 4 and 6. A factor of 4 is used if the formation is fine and uniform; a factor of 6 is used if the formation is coarser and non-uniform. In both cases, the uniformity coefficient of the filter pack materials should not exceed 2.5 and the gradation of the filter material should form a smooth and gradual size distribution

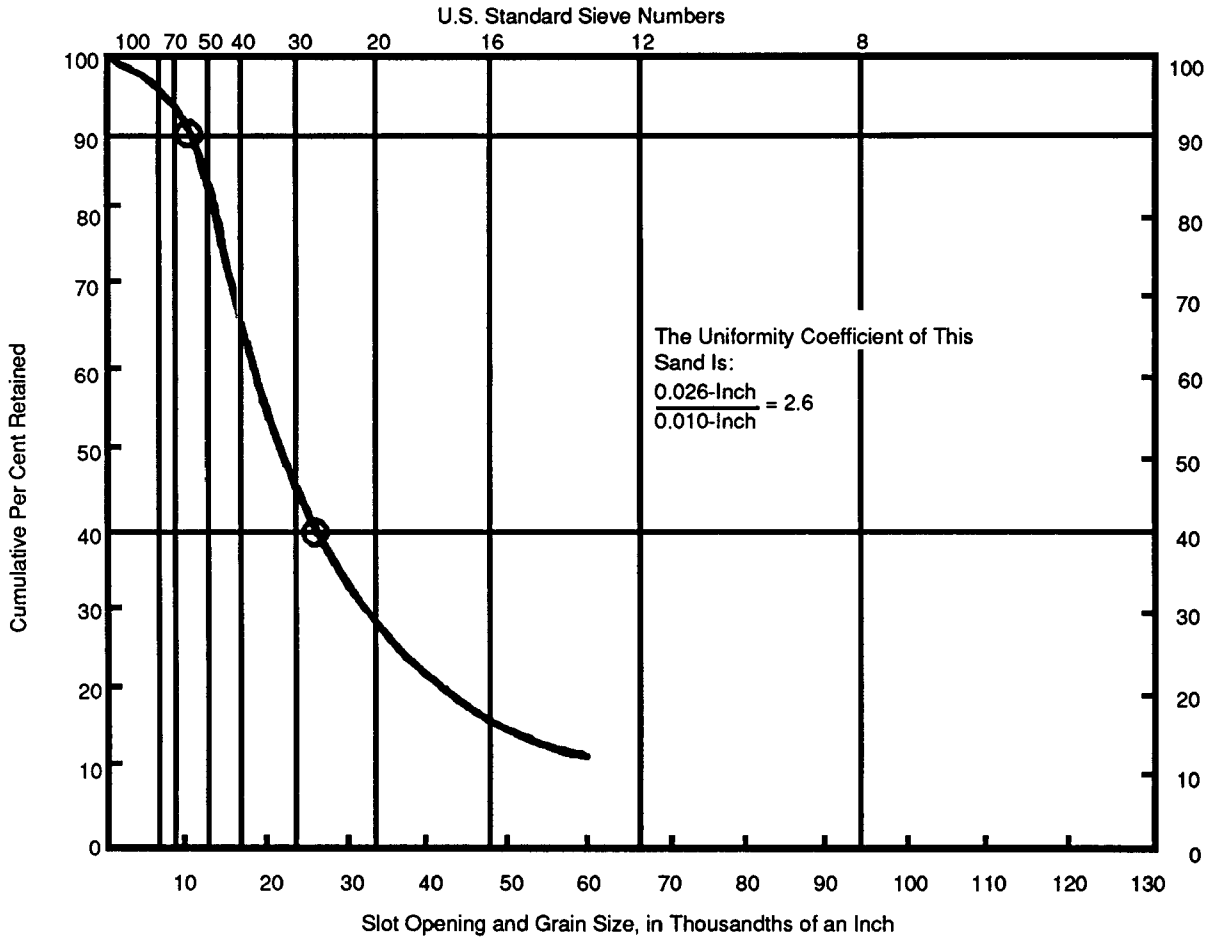

Figure 57. Determining uniformity coefficient of formation materials.

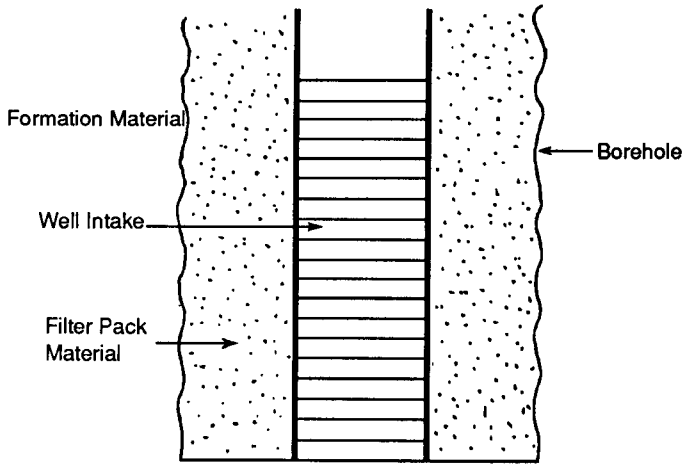

Figure 58. Envelope of coarse-grained material emplaced around an artificially filter-packed well.

when plotted (Figure 59). The actual filter pack used should fall within the area defined by these two curves. According to Williams (1981), in uniform formation materials, either approach to filter pack material sizing will provide similar results; however in coarse, poorly sorted formation materials, the average grain size method may be misleading and should be used with discretion.

Two types of artificial filter packs are possible for use in production wells: 1) the uniform, well-sorted grain size filter pack and 2) the graded grain-size filter pack. Uniform filter packs are generally preferred to graded packs for monitoring wells. Graded packs are more susceptible to the invasion of formation materials at the formation-filter pack interface. This invasion results in a partial filling of voids between grains and a concomitant reduction in permeability. Graded packs are also difficult to install in the limited annular space available without segregation of the filter pack material. With a uniform filter pack, the fine formation materials can travel between the grains of the pack and be pulled into the well during development. When this occurs, the formation permeability is increased and the high permeability of the filter pack is also retained.

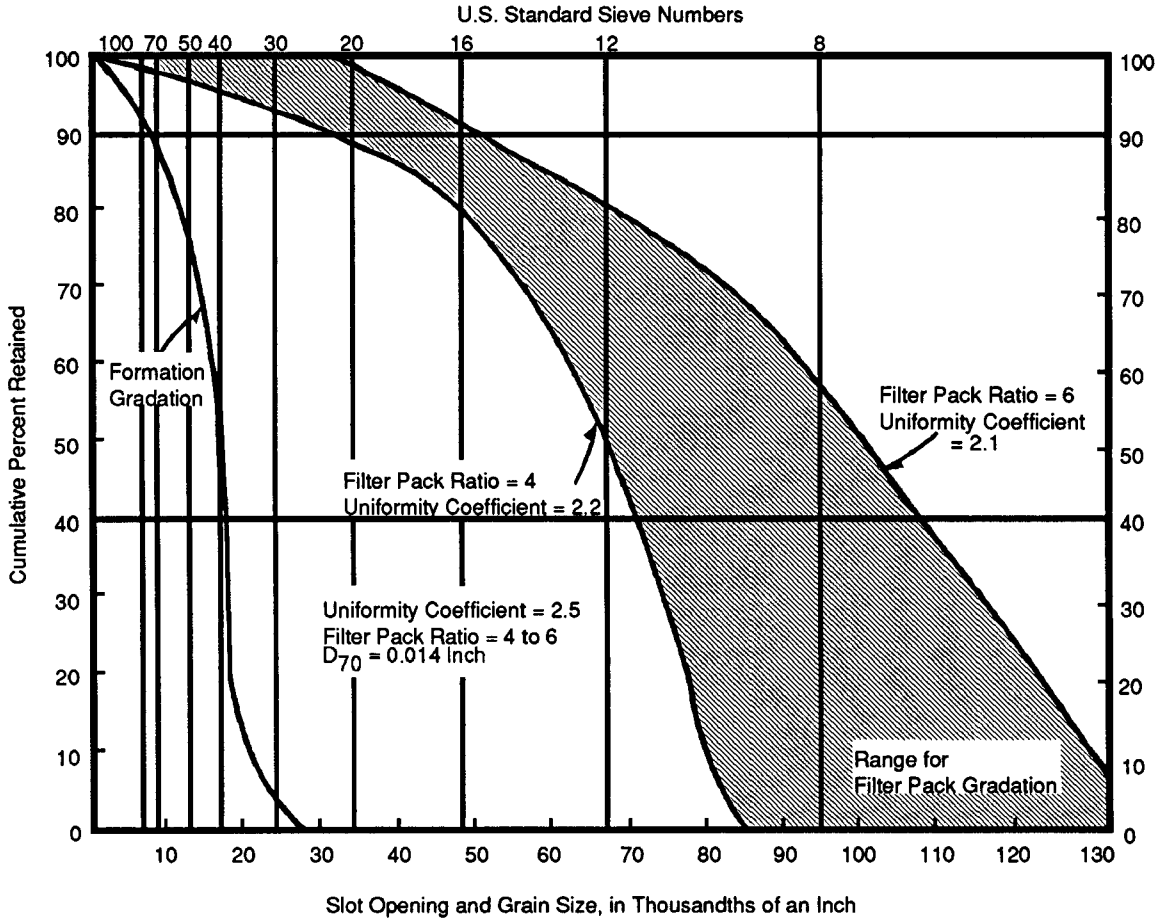

Figure 59. Artificial filter pack design criteria.

The size of well intake openings can only be selected after the filter pack grain size is specified. The opening (slot) size is generally chosen on the basis of its ability to hold back between 85 percent and 100 percent of the filter pack materials (United States Environmental Protection Agency, 1975) (Figure 60).

Filter Pack Dimensions —

The filter pack should generally extend from the bottom of the well intake to approximately 2 to 5 feet above the top of the well intake provided the interval above the well intake does not result in cross-connection with an overlying zone. If cross-connection is a potential problem, then the design may need to be adjusted. The filter pack placed above the intake allows for settlement of the filter pack material that occurs during well development and allows a sufficient "buffer" between the well intake and the annular seal above.

The filter pack must be at least thick enough to surround the well intake completely but thin enough to minimize resistance caused by the filter pack to the flow of water into the well during development. To accommodate the filter pack, the well intake should be centered in the borehole and the annulus should be large enough and approximately symmetrical to preclude bridging and irregular placement of filter pack material. A thicker filter pack neither increases the yield of the well nor reduces the amount of fine material in the water flowing to the well (Ahrens, 1957). Most references in the literature (Walker, 1974; United States Environmental Protection Agency, 1975; Williams, 1981; Driscoll, 1986) suggest that a filter pack thickness of between 3 and 8 inches is optimum for production wells. A thin filter pack is preferable from the well-development perspective, because it is difficult to develop a well with a thick filter pack. Conversely, it is difficult to reliably construct a well with a filter pack that is less than 2 inches thick. Monitoring well filter pack thicknesses are commonly suggested to be at least 2 to 4 inches. Methods to calculate the volume of filter pack necessary are contained in Appendix A in the section entitled "Installation of the Filter Pack."

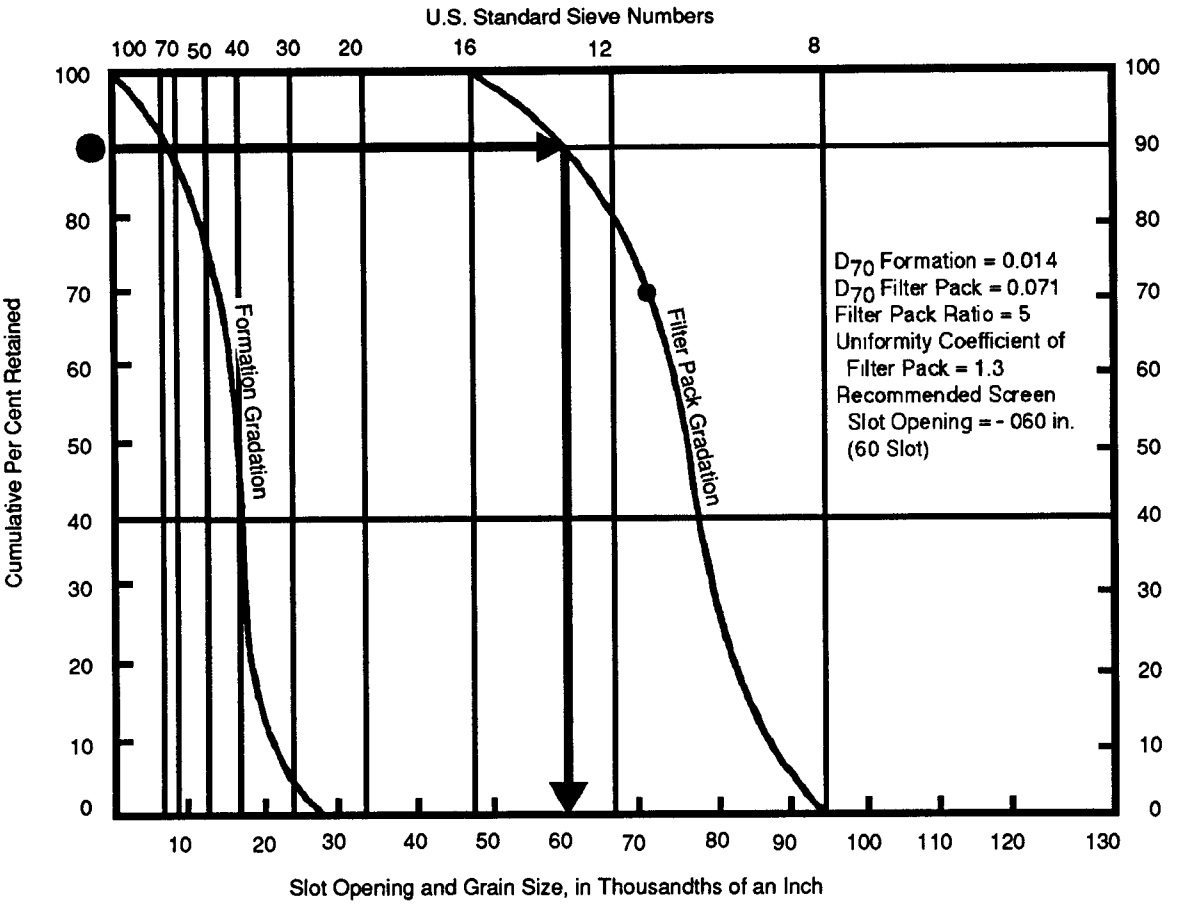

Figure 60. Selecting well intake slot size based on filter pack grain size.

Filter Pack Materials —

The materials comprising the filter pack in a monitoring well should be chemically inert to alleviate the potential for alteration of ground-water sample chemical quality. Barcelona et al. (1985b) suggest that the filter pack materials should be composed primarily of clean quartz sand or glass beads. The individual grains of the filter pack materials should be well-rounded and consist of less than 5 percent non-siliceous material (Driscoll, 1986). For natural materials, well rounded quartz is preferred because quartz is nonreactive in nearly all ground-water conditions and is generally available. A filter pack comprised of other types of crushed stone should not be used because of potential chemical alteration of ground water and problems from non-rounded material. If crushed limestone is used, the alterations may be particularly significant and pH modifications can be expected. Shale and carbonaceous material should also be avoided.

Well Intake Design

Monitoring well intake design factors include: 1) intake opening (slot) size, 2) intake length, 3) intake type and 4) corrosion and chemical degradation resistance. Proper sizing of monitoring well intake openings is one of the most important aspects of monitoring well design. There has been in the past a tendency among some monitoring well designers to install a "standard" or common slot size (e.g., 0.010 inch slots) in every well, with no site-specific design considerations. As Williams (1981) points out, this can lead to difficulties with well development, poor well performance or, in some severe cases, well failure.

Well Intake Opening Sizes —

For artificially filter packed wells, the well intake opening sizes are selected as previously discussed and illustrated in Figure 60. For naturally packed wells, well intake opening sizes are generally selected based on the following criteria that were developed primarily for production wells:

1) where the uniformity coefficient of the formation material is greater than 6 and the material above the intended screened interval is non-caving, the slot size should be that which retains no less than 30 percent of formation material;
2) where the uniformity coefficient of the formation material is greater than 6 and the material above the intended screened interval is readily-caving, the slot size should be that which retains no less than 50 percent of formation material;
3) where the uniformity coefficient of the formation

material is less than 3 and the material above the intended screened interval is non-caving, the slot size should be that which retains no less than 40 percent of formation material;

4) where the uniformity coefficient of the formation material is less than 3 and the material above the intended screened interval is readily-caving, the slot size should be that which retains no less than 60 percent of formation material; and
5) where an interval to be monitored has layered formation material of differing sizes and gradations, and where the 50 percent grain size of the coarsest layer is less than 4 times the 50 percent size of the finest layer, the slot size should be selected on the basis of the finest layer. Otherwise, separate screened sections should be sized for each zone.

Because these criteria were developed for production wells, those factors that enhance yield are overemphasized. The objective of a monitoring well is frequently to obtain a water quality sample that is representative of the in-situ ground-water quality. Hence it is imperative to minimize disturbance or distortion of flow lines from the aquifer into the well. To achieve this objective, construction activities that result in caving, void space or modification of the stratigraphy in the vicinity of the wellbore must be avoided or minimized. Procedures for attaining this objective have been discussed in this chapter in the section entitled "Naturally-Developed Wells" and in Section 4 in the part entitled "Ability of Drilling Technology to Preserve Natural Conditions."

The slot size determined from a sieve analysis is seldom that of commercially available screen slot sizes (Table 33), so the nearest smaller standard slot size is generally used. In most monitoring wells, because optimum yield from the well is not as critical to achieve as it is in production wells and because extensive development is more difficult to accomplish in small-diameter monitoring wells, screens are usually designed to have smaller openings than indicated by the above-stated design criteria so that less formation material will be pulled into the well during the development.

Well Intake Length Selection —

The selection of the length of a monitoring well intake depends on the purpose of the well. Most monitoring wells function as both ground-water sampling points and piezometers for a discrete interval. To accomplish these objectives, well intakes are typically 2 to 10 feet in length, and only rarely equal or exceed 20 feet in length. Shorter intakes provide more specific information about vertically-distributed water quality, hydraulic head and flow in the monitored formation. However, if the objective of the well is to monitor for the gross presence of contaminants in an aquifer, a much longer screen can be selected to monitor a greater thickness of the aquifer. This type of well can provide an integrated water sample and an integrated hydraulic head measurement as well as access for vertical profiling.

There are also situations where the "flow-through"-type well is preferable. In a flow-through installation, a small-diameter screen of 2 inches diameter or less, is installed to fully penetrate an aquifer, or to at least penetrate a significant portion of the aquifer. The diameter of the screen is small so that minimal distortion of the flow field in the aquifer is created. Borehole geochemical profiling is used to evaluate vertical variations in contaminant flow; spot sampling can be used to provide zone characterization with minimal vertical mixing. By slowly lowering a geochemical probe into the borehole, measurements of parameters such as pH, Eh, conductivity, dissolved oxygen and temperature can be taken at close intervals (e.g. 1-foot, 2-foot or 5-foot intervals). These measurements can be recorded successively from the top of the saturated zone to the bottom of the screened interval with very slight disturbance to the zone being measured. Measurements are taken as the probe is lowered because vertical mixing in the borehole can be expected to occur as the probe is withdrawn.

Once sufficient time has passed after sampling for indigenous conditions to be reestablished, a grab sampler can be lowered to the uppermost zone of interest and a water quality sample obtained. By slowly and carefully sampling successively deeper zones, a series of relatively undisturbed water quality samples can be collected for laboratory analysis. The laboratory results can subsequently be compared with the data obtained from the geochemical probe. The method of geochemical evaluation is particularly valuable for evaluating three-dimensional flow in a stratified but relatively homogeneous aquifer such as fluvial sands and gravels.

Well Intake Type —

The hydraulic efficiency of a well intake depends primarily on the amount of open area available per unit length of intake. While hydraulic efficiency is of secondary concern in monitoring wells, increased open area in monitoring well intakes also permits easy flow of water from the formation into the well and allows for effective well development. The amount of open area in a well intake is controlled by the type of well intake and opening size.

Many different types of intakes are available for use in production wells; several of these are also suitable for use in monitoring wells. Commercially-manufactured well intakes are recommended for use in monitoring wells because stricter quality control measures are followed by commercial manufacturers. Hand-slotted or drilled casings should not be used as monitoring well intakes because there is poor control over the intake opening size, lack of open area and potential leaching and/or chemical problems at the fresh surfaces exposed by hand sawing or drilling. Similarly, casing that has been perforated either by the application of a casing knife or a perforating gun after the casing is installed in the borehole is not recommended because intake openings cannot be closely spaced, the percentage of open area is low, the opening sizes are highly variable and opening sizes small enough to control fine materials are difficult or impossible to produce. Additionally, perforation tends to hasten corrosion attack on metal casing because the jagged edges and rough surfaces of the perforations are susceptible to selective corrosion.

Many commercially-manufactured well intakes have been used in monitoring wells including: 1) the louvered (shutter-type) intake, 2) the bridge-slot intake, 3) the machine-slotted well casing and 4) the continuous-slot wire-wound intake (Figure 61). The latter two types of intakes are used most

Table 33. Correlation Chart of Screen Openings and Sieve Sizes (Driscoll, 1986)

Geologic Material Grain-size Range	Johnson Slot No.	Gauze No.	Tyler Sieve No.	Tyler Size of Openings Inches	Tyler Size of Openings mm	U.S Standard Sieve No.	U.S Standard Size of Openings Inches
		-	400	0.0015	0.038	400	0.0015
clay	-	-	325	0.0017	0.043	325	0.0017
&	-	-	270	0.0021	0.053	270	0.0021
silt	-	-	250	0.0024	0.061	230	0.0024
	-	-	200	0.0029	0.074	200	0.0029
	-	-	170	0.0035	0.088	170	0.0035
	-	-	150	0.0041	0.104	140	0.0041
fine	-	-	115	0.0049	0.124	120	0.0049
sand	6	90	100	0.0058	0.147	100	0.0059
	7	80	80	0.0069	0.175	80	0.0070
	8	70	65	0.0082	0.208	70	0.0083
	10	60	60	0.0097	0.246	60	0.0098
	12	50	48	0.0116	0.295	50	0.0117
	14	-	42	0.0138	0.351	45	0.0138
medium	16		35	0.0164	0.417	40	0.0165(1/64)
sand	18	40	-	0.0180	0.457	-	0.0180
	20		32	0.0195	0.495	35	0.0197
	23		28	0.0232	0.589	30	0.0232
	25	30	-	0.0250	0.635	-	0.0250
	28		24	0.0276	0.701	25	0.0280
coarse	31		-	0.0310	0.788	-	0.0310(1/32)
sand	33		20	0.0328	0.833	20	0.0331
	35	20	-	0.035	0.889	-	0.0350
	39		16	0.039	0.991	18	0.0394
	47		14	0.046	1.168	16	0.0469
very	56		12	0.055	1.397	14	0.0555
coarse	62		-	0.062	1.590	-	0.062(1/16)
sand	66		10	0.065	1.651	12	0.0661
	79		9	0.078	1.981	10	0.0787
	93		8	0.093	2.362	8	0.0931
very	94		-	0.094	2.390	-	0.094(3/32)
fine	111		7	0.110	2.794	7	0.111
gravel	125		-	0.125	3.180	-	0.125(1/8)
	132		6	0.131	3.327	6	0.132
	157		5	0.156	3.962	5	0.157
	187		4	0.185	4.699	4	0.187(3/16)
fine	223		31/2	0.221	5.613	31/2	0.223
gravel	250		-	0.250	6.350	1/4	0.250(1/4)
	263		3	0.263	6.680	-	0.263
	312		21/2	0.312	7.925	5/16	0.312(5/16)
	375		0.371	0.371	9.423	3/8	0.375(3/8)
	438		0.441	0.441	11.20	7/16	0.438(7/16)
	500		0.525	0.525	13.33	1/2	0.500(1/2)

extensively because they are the only types available with 2-inch inside diameters.

The louvered (shutter-type) screen has openings that are manufactured in solid-wall metal tubing by stamping outward with a punch against dies that limit the size of the openings (Helweg et al., 1984). The number and sizes of openings that can be made depends on the series of die sets used by individual manufacturers. Because a complete range of die sets is impractical, the opening sizes of commercially-available screens are somewhat limited. Additionally, because of the large blank spaces that must be left between adjacent openings, the percentage of open area on louvered intakes is limited. Louvered well intakes are primarily used in artificially-packed wells because the shape of the louvered openings is such that the shutter-type intakes are more difficult to develop in naturally-packed wells. This type of intake, however, provides greater collapse strength than most other intakes.

Bridge-slot screen is manufactured on a press from flat sheets or plates of metallic material that are rolled into cylinders and seam-welded after being perforated. The slot opening is usually vertical with two parallel openings longitudinally aligned to the well axis. Five-foot sections of bridge-slot screen that can be welded into longer screen sections if desired are commonly available. The advantages of bridge-slot screen include: a reasonably high intake opening area, minimal frictional head losses and low cost. One important disadvantage is low collapse strength that is caused by the presence of a large number of vertically-oriented slots. The use of this type of intake is limited

in monitoring well application because it is only produced in diameters 6 inches and larger.

Slotted well intakes are fabricated from standard well casing by cutting horizontal (circumferential) or vertical (axial) slots of predetermined widths at regular intervals with machining tools. Slotted well casing can be manufactured from any casing material although these intakes are most commonly made from thermoplastic, fluoropolymer and fiberglass-reinforced epoxy materials. This type of intake is available in diameters ranging from 3/4 inch to 16 inches (National Water Well Association and Plastic Pipe Institute, 1981). Table 34 lists the most common slot widths of slotted well casing.

Table 34. Typical Slotted Casing Slot Widths (National Water Well Association and Plastic Pipe Institute, 1981)

0.006	0.016	0.040
0.007	0.018	0.050
0.008	0.020	0.060
0.010	0.025	0.070
0.012	0.030	0.080
0.014	0.035	0.100

The continuous slot wire-wound intake is manufactured by winding cold-drawn wire, approximately triangular in cross section, spirally around a circular array of longitudinally arranged rods (Figure 62). At each point where the wire crosses the rods, the two members are securely joined by welding, creating a one-piece rigid unit (Driscoll, 1986) Continuous-slot intakes can be fabricated of: 1) any metal that can be resistance-welded, including bronze, silicon red brass, stainless steel (104 and 316), galvanized and low-carbon steel and 2) any thermoplastic that can be sonic-welded, including polyvinyl chloride (PVC) and acrylonitrile butadiene styrene (ABS).

The slot openings of continuous-slot intakes are produced by spacing the successive turns of the wire as desired. This configuration provides significantly greater open area per given length and diameter than is available with any other intake type. For example, for 2-inch inside diameter well intake, the open area ranges from approximately 4 percent for the smallest slot size (0.006 inch) to more than 26 percent for the largest slot size (0.050 inch) (Table 35). Continuous-slot intakes also provide a wider range of available slot sizes than any other type of intake and have slot sizes that are accurate to within ±0.003 inch (Ahrens, 1970). The slot openings are designated by numbers that correspond to the width of the opening in thousandths of an inch. A number 10 slot, for example, refers to an opening of 0.010 inch.

The continuous-slot intake also is more effective in preventing formation materials from becoming clogged in the openings. The triangular-shaped wire is wound so that the slot openings between adjacent wires are V-shaped, with sharp outer edges; the slots are narrowest at the outer face and widen inwardly. This makes the intakes non-clogging because particles slightly smaller than the openings can pass freely into the well without wedging in the opening.

Well Intake Material Properties —

The intake is the part of the monitoring well that is most susceptible to corrosion and/or chemical degradation and provides the highest potential for sorption or leaching phenomena to occur. Intakes have a larger surface area of exposed material than casing, are placed in a position designed to be in contact with potential contaminants (the saturated zone) and are placed in an environment where reactive materials are constantly being renewed by flowing water. To avoid corrosion, chemical degradation, sorption and leaching problems, the materials from which intakes are made are selected using the same guidelines as for casing materials.

Annular Seals

Purpose of the Annular Seal

Any annular space that is produced as the result of the installation of well casing in a borehole provides a channel for vertical movement of water and/or contaminants unless the space is sealed. In any casing/borehole system, there are several potential pathways for water and contaminants (Figure 63). One pathway is through the sealing material. If the material is not properly formulated and installed or if it cracks or deterio-

Table 35. Intake Areas (Square Inches per Lineal Foot of Screen) for Continuous Wire-Wound Well Intake (After Johnson Screens, Inc., 1988)

Screen Size (In.)	6 Slot (0.006")	8 Slot (0.008")	10 Slot (0.010")	12 Slot (0.012")	15 Slot (0.015")	20 Slot (0.020")	25 Slot (0.025")	30 Slot (0.030")	35 Slot (0.035")	40 Slot (0.040")	50 Slot (0.050")
1 1/4 PS*	3.0	3.4	4.8	6.0	7.0	8.9	10.8	12.5	14.1	15.6	18.4
2 PS	3.0	3.4	4.8	6.0	7.0	8.9	10.8	12.5	14.1	15.6	18.4
1 1/2 PS	3.4	4.5	5.5	6.5	8.1	10.2	12.3	14.2	16.2	17.9	20.1
2 PS	4.3	5.5	6.8	8.1	10.0	12.8	15.4	17.9	20.3	22.4	26.3
3 PS	5.4	7.1	8.8	10.4	12.8	16.5	20.0	23.2	26.5	29.3	34.7
4 PS	7.0	9.0	11.3	13.5	16.5	21.2	25.8	30.0	33.9	37.7	44.5
4 Spec**	7.4	9.7	11.9	14.2	17.2	22.2	27.1	31.3	35.5	39.7	46.8
4 1/2 PS	7.1	9.4	11.7	13.8	17.0	21.9	26.8	31.0	35.2	39.4	46.5
5 PS	8.1	10.6	13.1	15.5	19.1	24.7	30.0	34.9	39.7	44.2	52.4
6 PS	8.1	10.6	13.2	15.6	19.2	25.0	30.5	35.8	40.7	45.4	54.3
8 PS	13.4	17.6	21.7	25.7	31.5	40.6	49.3	57.4	65.0	72.3	85.6

The maximum transmitting capacity of screens can be derived from these figures. To determine GPM per ft of screen, multiply the intake area in square inches by 0.31. It must be remembered that this is the maximum capacity of the screen under ideal conditions with an entrance velocity of 0.1 foot per second.

* PS means pipe size.

** Spec means special.

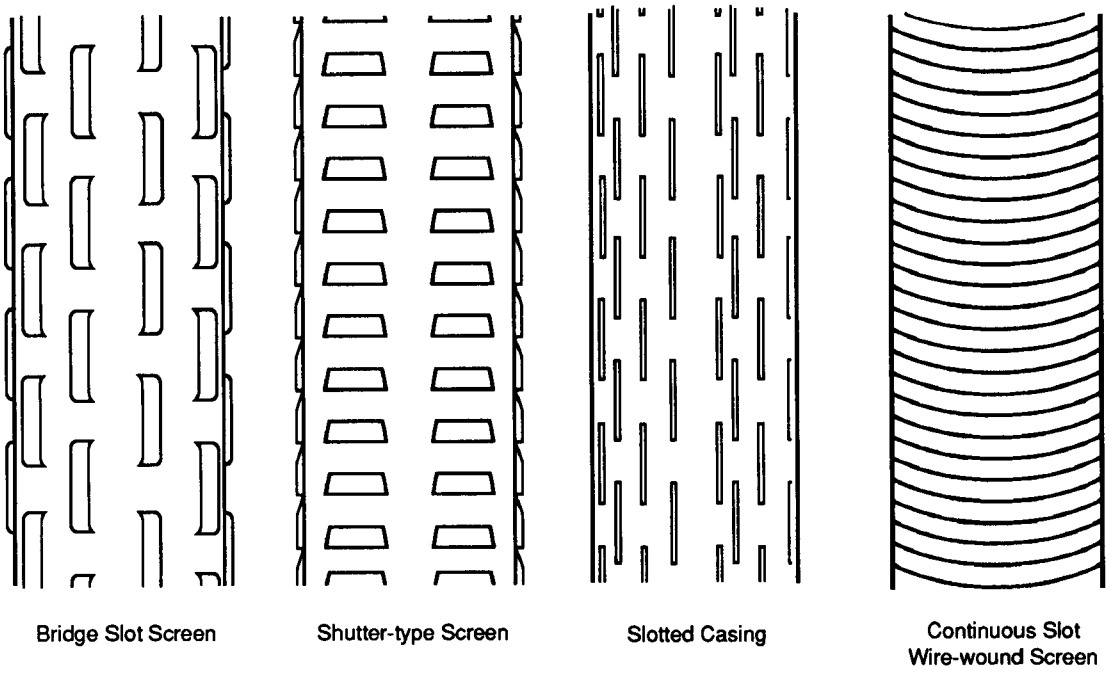

Figure 61. Types of well intakes.

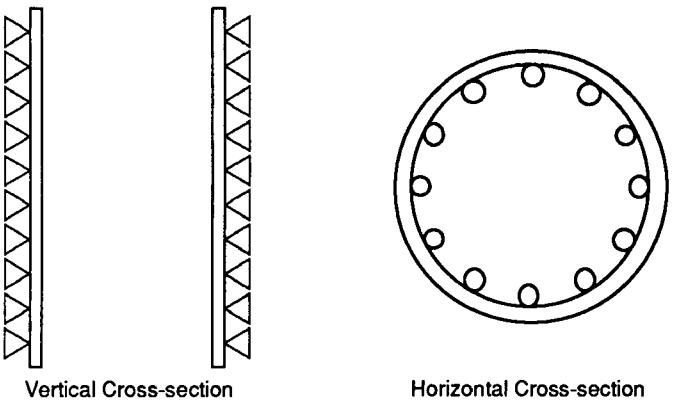

Figure 62. Cross-sections of continuous-wrap wire-wound screen

rates after emplacement, the permeability in the vertical direction can be significant. These pathways can occur because of any of several reasons, including: 1) temperature changes of the casing and sealing material (principally neat cement) during the curing or setting of the sealing material, 2) swelling and shrinkage of the sealing material while curing or setting or 3) poor bonding between the sealing material and the casing (Kurt and Johnson, 1982). Another pathway may result if sealing materials bridge in the annular space. All of these pathways can be anticipated and usually avoided with proper annular seal formulation and placement methods.

The annular seal in a monitoring well is placed above the filter pack in the annulus between the borehole and the well casing. The seal serves several purposes: 1) to provide protection against infiltration of surface water and potential contaminants from the ground surface down the casing/borehole annulus, 2) to seal off discrete sampling zones, both hydraulically and chemically and 3) to prohibit vertical migration of water. Such vertical movement can cause what is referred to as "cross contamination." Cross contamination can influence the representativeness of ground-water samples and can cause an anomalous hydraulic response of the monitored zone, resulting in distorted data. The annular seal increases the life of the casing by protecting it against exterior corrosion or chemical degradation. A satisfactory annular seal results in complete filling of the annular space and envelopes the entire length of the well casing to ensure that no vertical migration can occur within the borehole. Methods to calculate the volume of sealant necessary to fill the annular space are contained in Appendix A in the section entitled "Installation of the Filter Pack." Volume calculations are the same as those performed to calculate filter pack volume.

Materials Used for Annular Seals

According to Moehrl (1964), the material used for an annular seal must:

1) be capable of emplacement from the surface;
2) hydrate or develop sufficient set strength within a reasonably short time;
3) provide a positive seal between the casing and the adjacent formations;
4) be chemically inert to formations or fluids with which it may come in contact;

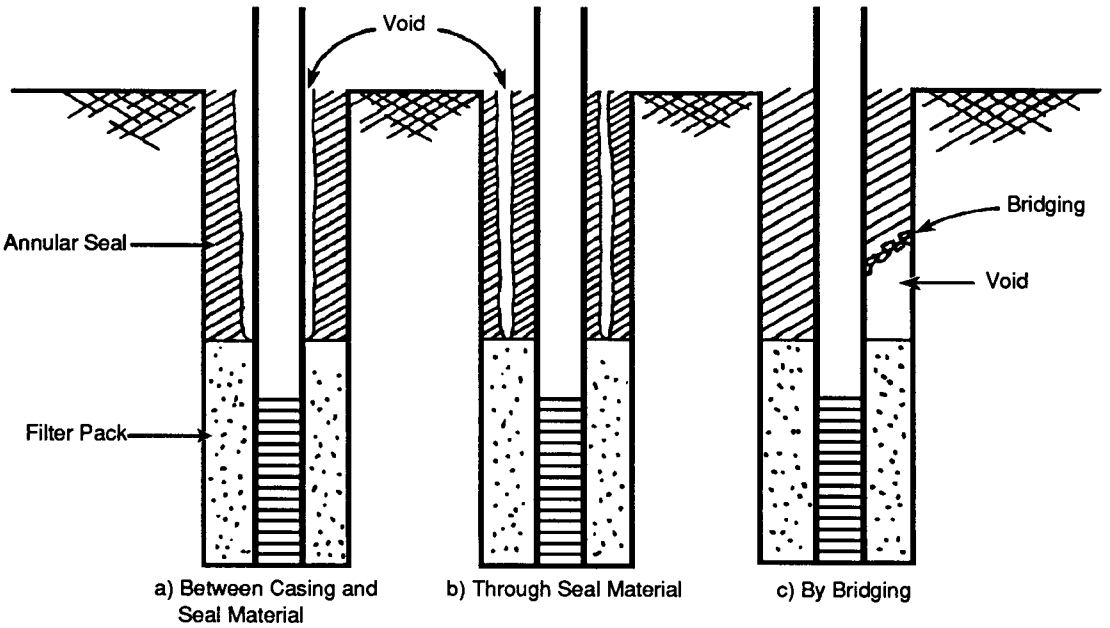

Figure 63. Potential pathways for fluid movement in the casing-borehole annulus.

5) be permanent, stable and resist chemical or physical deterioration; and
6) be sufficiently impermeable to fluids to ensure that the vertical permeability of the casing/borehole system be lower than that of surrounding formations.

The annular seal may be comprised of several different types of permanent, stable, low-permeability materials including pelletized, granular or powdered bentonite, neat cement grout and combinations of both. The most effective seals are obtained by using expanding materials that will not shrink away from either the casing or the borehole wall after curing or setting. Bentonite, expanding neat cement or mixtures of neat cement and bentonite are among the most effective materials for this purpose (Barcelona et al., 1983; 1985a). If the casing/borehole annulus is backfilled with any other material (e.g., recompacted, uncontaminated drill cuttings; sand or borrow material), a low permeability seal cannot be ensured and the borehole may then act as a conduit for vertical migration. This is particularly a problem when drill cuttings are used as a seal because recompacted drill cuttings usually have a higher permeability than the natural formation materials from which they are derived.

Bentonite —

Bentonite is a hydrous aluminum silicate comprised principally of the clay mineral montmorillonite. Bentonite possesses the ability to expand significantly when hydrated; the expansion is caused by the incorporation of water molecules into the clay lattice. Hydrated bentonite in water typically expands 10 to 15 times the volume of dry bentonite. Bentonite forms an extremely dense clay mass with an in-place permeability typically in the range of 1×10^{-7} to 1×10^{-9} cm/sec when hydrated. Bentonite expands sufficiently to provide a very tight seal between the casing and the adjacent formation material, thus making it a desirable sealant for the casing/borehole annulus in monitoring wells.

Bentonite used for the purpose of sealing the annulus of monitoring wells is generally one of two types: 1) sodium bentonite or 2) calcium bentonite. Sodium bentonite is the most widely used because of its greater expandability and availability, Calcium bentonite may be preferable in high-calcium environments because shrinkage resulting from long-term calcium-for-sodium ion exchange is minimized. Bentonite is available in several forms including pellets, granules and powder. Pellets are uniformly shaped and sized by compression of sodium montmorillonite powder. Granules are irregularly shaped and sized particles of sodium montmorillonite. Both pellets and granules expand at a relatively fast rate when exposed to fresh water. The powdered form of bentonite is the form produced by the processing plant after mining. While both pelletized and granular bentonite may be emplaced in dry form, powdered bentonite is generally made into a slurry to allow emplacement.

Bentonite slurry is generally prepared by mixing dry bentonite powder into fresh water in a ratio of approximately 15 pounds of bentonite to 7 gallons of water to yield 1 cubic foot of bentonite slurry. The bentonite and water are mixed by moderate agitation, either manually in a large tank or with a paddle mixer. The use of high-shear mixing equipment increases the viscosity development of the slurry and can reduce the ultimate working time by as much as 20 percent. Thick bentonite slurries may swell quickly into non-pumpable gel masses that cannot be emplaced. Pre-mix and/or polymer (organic and inorganic) additives delay the wetting of the bentonite and prevent premature hydration. Where additives

are used, the additives should be evaluated for potential effects on extant ground-water quality. Once the slurry is mixed, it should remain workable for between one-half and two hours. During this time, a positive displacement mud or grout pump (typically a centrifugal, diaphragm, piston or moyno-type pump) is used to emplace the seal at the desired depth.

Bentonite has a high cation exchange capacity. This high cation exchange capacity allows the bentonite to exchange cations that are part of the chemical structure of the bentonite (principally Na, Al, Fe and Mn) with cations that exist in the aqueous solution (e.g., ground water) that hydrates the bentonite. The bentonite may take up or release cations from or into aqueous solution depending on: 1) the chemistry of both the bentonite and the solution and 2) the pH and redox potential of the aqueous solution. In addition to having a high cation exchange capacity, bentonite generally sets up with a moderately high pH between 8.5 and 10.5. Thus, bentonite may have an impact on the quality of ground water with which it comes in contact. In particular, pH and metallic ion content may be affected. If a bentonite seal is placed too close to the top of the well intake, water-quality samples that are not representative of the aquifer may be collected. The suggested practice is to place at least 1 foot of very fine-grained sand on top of the filter pack and to place the bentonite sealing material 2 to 3 feet above the top of the well intake, where possible.

The effective use of bentonite pellets as a sealing material depends on efficient hydration following emplacement. Hydration requires the presence of water of both sufficient quantity and quality within the geologic materials penetrated by the borehole. Generally, efficient hydration will occur only in the saturated zone. Bentonitic materials by themselves are generally not appropriate for use in the vadose zone because sufficient moisture is not available to effect hydration of the bentonite. Certain water-quality conditions inhibit the swelling of bentonite. For example, bentonite mixed with water that has either a total dissolved solids content greater than 500 parts per million or a high chloride content may not swell to occupy the anticipated volume and therefore may not provide an effective seal, The degree of inhibition depends on the level of chlorides or total dissolved solids in the water. Recent studies conducted to determine the effects of some organic solvents and other chemicals (i.e., xylene, acetone, acetic acid, aniline, ethylene glycol, methanol and heptane) on hydrated clays including bentonite have demonstrated that bentonite and other clays may lose their effectiveness as low-permeability barrier materials in the presence of concentrated solutions of selected chemical substances (Anderson et al., 1982; Brown et al., 1983). These studies have shown that the hydraulic conductivity of clays subjected to high concentrations of organic acids, basic and neutral polar organic compounds and neutral non-polar organic compounds may increase by several orders of magnitude due to dessication and dehydration of the clay material. This dessication and dehydration can provide conduits for vertical migration within boreholes in which bentonite is used as sealing material. Villaume (1985) points to possible attack on and loss of integrity of bentonite seals due to dehydration and shrinkage of the clay by hydrocarbons in the free product phase. Thus, where these chemical conditions exist in the subsurface, bentonite may not perform as an effective seal and another material may be necessary.

In summary, factors that should be considered in evaluating the use of bentonite as a sealant include:

1) position of the static water level in a given borehole (including seasonal and other water-level fluctuations);
2) ambient water quality (particularly with respect to total dissolved solids conti'nt and chloride content); and
3) types and potential concentrations of contaminants expected to be encountered in the subsurface.

Cement —

Neat cement is a mixture of Portland cement (ASTM C-150) and water in the proportion of 5 to 6 gallons of clean water per bag (94 pounds or 1 cubic foot) of cement. Five general types of Portland cement are produced: Type I, for general use; Type II, for moderate sulfate resistance or moderate heat of hydration; Type III, for high early strength; Type IV, for low heat of hydration; and Type V, for high sulfate resistance (Moehrl, 1964). Of the five types of cement, Type I is the most widely used in ground-water related work.

Portland cement mixed with water in the above-cited proportions creates slurry that weighs approximately 14 to 15 pounds per gallon. A typical 14 pounds per gallon neat cement slurry has a mixed volume of approximately 1.5 cubic feet per sack and a set volume of approximately 1.2 cubic feet; volumetric shrinkage is approximately 17 percent and the porosity of the set cement approximates 54 percent (Moehrl, 1964). The setting time for such a cement mixture ranges from 48 to 72 hours depending primarily on water content. A variety of additives may be mixed with the cement slurry to change the properties of the cement. The more common additives and associated effects on the cement include:

1) bentonite (2 percent to 6 percent). Bentonite improves the workability of the cement slurry, reduces the slurry weight and density, reduces shrinkage as the cement sets and produces a lower unit cost sealing material. Bentonite also reduces the set strength of the seal, but this is rarely a problem because the seal is seldom subject to high stress (Ahrens, 1970);
2) calcium chloride (1 percent to 3 percent). Calcium chloride accelerates the setting time and creates a higher early strength; these attributes are particularly useful in cold climates. Calcium chloride also aids in reducing the amount of slurry that enters into zones of coarse material;
3) gypsum (3 percent to 6 percent). Gypsum produces a quick-setting, very hard cement that expands upon setting. However, the high cost of gypsum as an additive limits the use to special operations;
4) aluminum powder (less than 1 percent). Aluminum produces a strong, quick-setting cement that expands on setting and therefore provides a tighter seal (Ahrens, 1970);
5) fly ash (10 percent to 20 percent). Fly ash increases sulfate resistance and early compressive strength;
6) hydroxylated carboxylic acid. Hydroxylated carboxylic acid retards setting time and improves

workability without compromising set strength; and

7) diatomaceous earth. Diatomaceous earth reduces slurry density, increases water demand and thickening time and reduces set strength.

Water used to mix neat cement should be clean, fresh water free of oil or other organic material and the total dissolved mineral content should be less than 2000 parts per million. A high sulfate content is particularly undesirable (Campbell and Lehr, 1975). If too much water is used, the grout will be weakened and excessive shrinkage will occur upon setting. If this occurs, the annulus will not be completely filled after the grouting operation. The voids in the annulus may not be seen from the surface but may still be present along the length of the casing (Kurt, 1983).

Mixing of neat cement grout can be accomplished manually or with a mechanical mixer. Mixing must be continuous so that the slurry can be emplaced without interruption. The grout should be mixed to a relatively stiff consistency and immediately pumped into the annulus. The types of pumps suggested for use with grout include reciprocating (piston) pumps, diaphragm pumps, centrifugal pumps or moyno-type pumps. These pumps are all commonly used by well drilling contractors.

Neat cement, because of its chemical nature (calcium carbonate, alumina, silica, magnesia, ferric oxide and sulfur trioxide), is a highly alkaline substance with a pH that typically ranges from 10 to 12. This high pH presents the potential for alteration of the pH of water with which it comes in contact. This alteration of pH in the ground water can subsequently affect the representativeness of any water-quality samples collected from the well. Because the mixture is emplaced as a slurry, the coarse materials that comprise the filter pack around the intake portion of a monitoring well may be infiltrated by the cement if the cement is placed directly on top of the filter pack. This is particularly true of thinner slurries that are mixed with more than 6 gallons of water per sack of cement. The cement infiltration problem also can be aggravated if well development is attempted prior to the time at which the cement has reached final set.

These problems can have a severe and persistent effect on the performance of the monitoring well in terms of yield and sample integrity. If thin grout is placed on top of the filter pack and infiltrates, the cement material can plug the filter pack and/or the well intake upon setting. The presence of the high-pH cement within the filter pack can cause anomalous pH readings in subsequent water samples taken from the well. Dunbar et al. (1985) reported that wells completed in low-permeability geologic materials with cement placed on top of the filter pack consistently produced samples with a pH greater than 9 for two and one-half years despite repeated attempts at well development. For these reasons, neat cement should not be emplaced directly on top of the filter pack of a monitoring well. Ramsey and Maddox (1982) have suggested that a 1 to 2-foot thick very fine-grained sand layer be placed atop the filter pack material prior to emplacement of the neat cement grout to eliminate the grout infiltration potential. A 2- to 5-foot thick bentonite seal will accomplish the same purpose, but requires additional time to allow the bentonite to hydrate prior to cement placement. Either or both of these procedures serve to minimize well performance impairment and chemical interference effects caused by the proximity of neat cement to the well intake.

Another potential problem with the use of neat cement as an annular sealing material centers around the heat generated by the cement as it sets. When water is mixed with any type of Portland cement, a series of spontaneous chemical hydration reactions occur. If allowed to continue to completion, these reactions transform the cement slurry into a rigid solid material. As the hydration reactions progress and the cement cures, heat is given off as a by-product; this heat is known as the heat of hydration (Troxell et al., 1968). The rate of dissipation of the heat of hydration is a function of curing temperature, time, cement chemical composition and the presence of chemical additives (Lerch and Ford, 1948). Generally, the heat of hydration is of little concern. However, if large volumes of cement are used or if the heat is not readily dissipated (as it is not in a borehole because of the insulating properties of geologic materials), relatively large temperature rises may result (Verbeck and Foster, 1950). The high heats can cause the structural integrity of some types of well casing, notably thermoplastic casing, to be compromised. Thermoplastics characteristically lose strength and stiffness as the temperature of the casing increases. Because collapse pressure resistance of a casing is proportional to the material stiffness, if casing temperatures are raised sufficiently this can result in failure of the casing (Johnson et al., 1980).

Molz and Kurt (1979) and Johnson et al. (1980) studied the heat of hydration problem and concluded:

1) peak casing temperatures increase as the grout thickness increases. Temperature rises for casings surrounded by 1.5 inches to 4-inches of Type I neat cement ranged from 16°F to 45°F; temperature rises for casings surrounded by 12 inches of grout (i.e. where washouts or caving or collapse of formation materials into the borehole might occur) can be in excess of 170 °F. In the former case, plastic pipe retains a large fraction of collapse strength, but in the latter case, some types of plastic pipe lose a large fraction of the collapse strength (Gross, 1970);
2) the ratio of the grout-soil interface surface area to the volume of grout significantly influences peak casing temperatures. Additionally, peak temperature rise for any casing size is nonlinear with respect to grout thickness. Lower peak temperatures can thus be expected for smaller-diameter casings; and
3) peak temperatures are normally reached 8 to 10 hours after water is added to the cement, and casing temperatures remain near their peak for several hours before slowly returning to the original temperature.

The use of setting time acelerators, such as calcium chloride, gypsum or aluminum powder can increase the heat of hydration and cause casings to overheat while the grout is curing. This temperature increase poses an increased potential for casing failure. Both Molz and Kurt (1979) and Johnson et al. (1980) attribute uncommon premature collapses of neat cement grouted thermoplastic-cased wells to two factors: 1) that most

grouting is done by filling the annulus from the bottom upward and 2) that as the grout cures, it gains strength and provides support to the casing.

Several methods can be used to minimize the heat of hydration. Adding setting-time retardants, such as bentonite or diatomaceous earth, to the grout mix tends to reduce peak temperatures. Other approaches include: adding inert materials such as silica sand to the grout; circulating cool water inside the casing during grout curing; and increasing the water-cement ratio of the grout mix (Kurt, 1983). However, increasing the water-cement ratio of the grout mix results in increased shrinkage and decreased strength upon setting and more potential to move beyond where expected or intended before setting.

Neat cement annular seals are subject to channeling between the casing and the seal because of temperature changes during the curing process; swelling and shrinkage of the grout while the mixture cures; and poor bonding between the grout and the casing surface (Kurt and Johnson, 1982). One method of ensuring a low-permeability grout seal in a monitoring well is to minimize the shrinkage of the grout as it cures. Minimizing shrinkage, lowering permeability and increasing the strength of cured grout can be accomplished by minimizing water/cement ratios (Kurt and Johnson, 1982). Typical vertical permeabilities for casing/grout systems were found by Kurt and Johnson (1982) to range from 20 to 100 x 10^{-5} centimeters per second. These permeabilities are higher than those determined for neat cement grout only. This implies that the presence of casing is a factor that increases the permeability of the system.

Methods for Evaluating Annular Seal Integrity

There are presently no fooproof field tests that can be performed to determine if a proper annular seal has been achieved. Of the most commonly used field tests for checking seals in production wells, only one appears to provide basic information on the integrity of an annular seal in a monitoring well--geophysical logging. The accuracy of geophysical logging techniques is often questioned because they are indirect sensing techniques. The log most commonly used to check a seal composed of neat cement grout is the cement bond (acoustic, sonic) log. A cement bond log generally indicates bonded and non-cemented zones but cannot detect the presence of vertical channels within the cement nor small voids in the contact area with the casing. Cement bond logs are available for wells with inside diameters of 2 inches or larger.

Where thermoplastic or fluorocarbon casing is installed, there is no sound or sonic wave return recorded along the casing as is the case with metallic pipe. As a consequence, the information derived is even more difficult to interpret. Further, there are no good methods available to evaluate the effectiveness of bentonite seals. This is an area in need of further research.

Surface Completion and Protective Measures

Two types of surface completions are common for groundwater monitoring wells: 1) above-ground completion and 2) flush-to-ground surface completion. An above-ground completion is preferred whenever practical, but a flush-to-ground surface may be required at some sites. The primary purposes of either type of completion are to prevent surface runoff from entering and infiltrating down the annulus of the well and to protect the well from accidental damage or vandalism.

Surface Seals

Whichever type of completion is selected for a well, there should always be a surface seal of neat cement or concrete surrounding the well casing and filling the annular space between the casing and the borehole at the surface. The surface seal may be an extension of the annular seal installed above the filter pack or it may be a separate seal emplaced on top of the annular seal. Because the annular space near the land surface is large and the surface material adjacent to the borehole is disturbed by drilling activity, the surface seal will generally extend to at least 3 feet away from the well casing at the surface; the seal will usually taper down to the size of the borehole within a few feet of the surface. In climates with alternating freezing and thawing conditions, the cement surface must extend below the frost depth to prevent potential well damage caused by frost heaving. A suggested design for dealing with heaving conditions is shown in Figure 21. If cement is mounded around the well to help prevent surface runoff from ponding and entering around the casing, the mound should be limited in size and slope so that access to the well is not: impaired and to avoid frost heave damage. In some states, well installation regulations were initially developed for water supply wells. These standards are sometimes now applied to monitoring wells, and these may require that the cement surface seal extend to depths of 10 feet or greater to ensure sanitary protection of the well.

Above-Ground Completions

In an above-ground completion, a protective casing is generally installed around the well casing by placing the protective casing into the cement surface seal while it is still wet and uncured. The protective casing discourages unauthorized entry into the well, prevents damage by contact with vehicles and protects PVC casing from degradation caused by direct exposure to sunlight. This protective casing should be cleaned thoroughly prior to installation to ensure that it is free of any chemicals or coatings. The protective casing should have a large enough inside diameter to allow easy access to the well casing and to allow easy removal of the casing cap. The protective casing should be fitted with a locking cap and installed so that there is at least 1 to 2 inches clearance between the top of the in-place inner well casing cap and the bottom of the protective casing locking cap when in the locked position. The protective casing should be positioned and maintained in a plumb position. The protective casing should be anchored below frost depth into the cement surface seal and extend at least 18 inches above the surface of the ground.

Like the inner well casing, the outer protective casing should be vented near the top to prevent the accumulation and entrapment of potentially explosive gases and to allow water levels in the well to respond naturally to barometric pressure changes. Additionally, the outer protective casing should have a drain hole installed just above the top of the cement level in the space between the protective casing and the well casing (Figure 21). This drain allows trapped water to drain away from the casing. This drain is particularly critical in freezing climates where freezing of water trapped between the inner well casing and the outer protective casing can cause the inner casing to buckle or fail.

A case-hardened steel lock is generally installed on the locking casing cap to provide well security. However, corrosion and jamming of the locking mechanism frequently occurs as the lock is exposed to the elements. Lubricating the locks or the corroded locking mechanisms is not recommended because lubricants such as graphite, petroleum-based sprays, silicone and others may provide the potential for sample chemical alteration. Rather, the use of some type of protective measure to shield the lock from the elements such as a plastic covering may prove a better alternative.

In high-traffic areas such as parking lots, or in areas where heavy equipment may be working, additional protection such as the installation of three or more "bumperguards" are suggested. Bumperguards are brightly-painted posts of wood, steel or some other durable material set in cement and located within 3 or 4 feet from the well.

Flush-to-Ground Surface Completions

In a flush-to-ground surface completion, a protective structure such as a utility vault or meter box is installed around well casing that has been cut off below grade. The protective structure is typically set into the cement surface seal before it has cured. This type of completion is generally used in high-traffic areas such as streets, parking lots and service stations where an above-ground completion would severely disrupt traffic patterns or in areas where it is required by municipal easements or similar restraints. Because of the potential for surface runoff to enter the below-grade protective structure and/or well, this type of completion must be carefully designed and installed. For example, the bond between the cement surface seal and the protective structure as well as the seal between the protective structure and removable cover must be watertight. Use of an expanding cement that bonds tightly to the protective structure is suggested. Installation of a flexible o-ring or gasket at the point where the cover fits over the protective structure usually suffices to seal the protective structure. In areas where significant amounts of runoff occur, additional safeguards to manage drainage may be necessary to discourage entry of surface runoff.

References

Ahrens, T.P., 1957. Well design criteria: part one; Water Well Journal, vol . II, no. 9, pp. 13-30.

Ahrens, T.P., 1970. Basic considerations of well design: part III; Water Well Journal, vol. 24, no. 6, pp. 47-51.

American Society for Testing and Materials, 1981. Standard specification for thermoplastic water well casing pipe and couplings made in standard dimension ratios (SDR): F-480; 1987 Annual Book of American Society for Testing Materials Standards, Philadelphia, Pennsylvania, pp. 1028-1033.

American Society for Testing and Materials, 1986. Standard specification for polyvinyl chloride (PVC) plastic pipe, schedules 40, 80 and 120: D1785; 1987 Annual Book of American Society for Testing Materials Standards, Philadelphia, Pennsylvania, pp. 89-101.

Anderson, D.C., K.W. Brown and J.W. Green, 1982. Effects of organic fluids on the permeability of clay soil liners; Land Disposal of Hazardous Waste: Proceedings of the 8th Annual Research Symposium, United States Environmental Protection Agency Report EPA-600/9-82-002, pp. 179-191.

Barcelona, M.J., 1984. TOC determinations in ground water; Ground Water, vol. 22, no. 1, pp. 18-24.

Barcelona, M.J., G.K. George and M.R. Schock, 1988. Comparison of water samples from PTFE, PVC and SS monitoring wells; United States Environmental Protection Agency, Office of Research and Development, Environmental Monitoring Systems Laboratory, Las Vegas, EPA 600/X-88/091, 37 pp.

Barcelona, M.J., J.P. Gibb, J.A. Helfrich and E.E. Garske, 1985a. Practical guide for ground-water sampling; Illinois State Water Survey, SWS Contract Report 374, Champaign, Illinois, 93 pp.

Barcelona, M.J., J.P. Gibb and R. Miller, 1983. A guide to the selection of materials for monitoring well construction and ground-water sampling; Illinois State Water Survey, SWS Contract Report 327, Champaign, Illinois, 78 pp.

Barcelona, M.J., and J.A. Helfrich, 1986. Well construction and purging effects on ground-water samples; Environmental Science & Technology, vol. 20, no. 11, pp. 1179-1184.

Barcelona, M.J., and J.A. Helfrich, 1988. Laboratory and field studies of well-casing material effects; Proceedings of the Ground Water Geochemistry Conference, National Water Well Association, Dublin, Ohio, pp. 363-375.

Barcelona, Michael J., John A. Helfrich and Edward E. Garske, 1985b. Sampling tubing effects on ground-water samples; Analytical Chemistry, vol. 57, no. 2, pp. 460-464.

Boettner, Edward A., Gwendolyn L. Ball, Zane Hollingsworth and Rumulo Aquino, 1981. Organic and organotin compounds leached from PVC and CPVC pipe; United States Environmental Protection Agency Report EPA-600/1-81-062, 102 pp.

Brown, K.W., J.W. Green and J.C. Thomas, 1983. The influence of selected organic liquids on the permeability of clay liners; Land Disposal of Hazardous Waste: Proceedings of the 9th Annual Research Symposium, United States Environmental Protection Agency Report EPA-600/9-83-018, pp. 114-125.

California Department of Health Services, 1986. The California site mitigation decision tree manual; California Department of Health Services, Sacramento, California, 375 pp.

Campbell, M.D. and J.H. Lehr, 1973. Water Well Technology; McGraw-Hill Book Company, New York, New York, 681 pp.

Campbell, M.D. and J.H. Lehr, 1975. Well cementing; Water Well Journal, vol. 29, no. 7, pp. 39-42.

Curran, Carol M. and Mason B. Tomson, 1983. Leaching of trace organics into water from five common plastics; Ground Water Monitoring Review, vol. 3, no. 3, pp. 68-71.

Dablow, John S. III, Grayson Walker and Daniel Persico, 1988. Design considerations and installation techniques for monitoring wells cased with Teflon ® PTFE; Ground-Water Contamination Field Methods, Collins and Johnson editors, ASTM Publication Code Number 04-963000-38, Philadelphia, Pennsylvania, pp. 199-205.

Driscoll, Fletcher G., 1986. Ground Water and Wells; Johnson Division, St. Paul, Minnesota, 1089 pp.

Dunbar, D., H. Tuchfeld, R. Siegel and R. Sterbentz, 1985. Ground-water quality anomalies encountered during well construction, sampling and analysis in the environs of a hazardous waste management facility; Ground Water Monitoring Review, vol. 5, no. 3, pp. 70-74.

Gross, S., 1970. Modern plastics encyclopedia; McGraw-Hill Book Company, New York, New York, vol. 46, 1050 pp.

Hamilton, Hugh, 1985. Selection of materials in testing and purifying water; Ultra Pure Water, January/February 1985, 3 pp.

Helweg, Otto J., Verne H. Scott and Joseph C. Scalmanini, 1984. Improving well and pump efficiency; American Water Works Association, 158 pp.

Johnson, Roy C., Jr., Carl E. Kurt and George F. Dunham, Jr., 1980. Well grouting and casing temperature increases; Ground Water, vol. 18, no. 1, pp. 7-13.

Johnson Screens, Inc. 1988. Johnson well screens prices and specifications; product literature, St. Paul, Minnesota, 20 pp.

Junk, Gregor A., Harry J. Svec, Ray D. Vick and Michael J. Avery, 1974. Contamination of water by synthetic polymer tubes; Environmental Science and Technology, vol. 8, no. 13, pp. 1100-1106.

Kurt, C.E., 1983. Cement-based seals for thermoplastic water well casings; Water Well Journal, vol. 37, no. 1, pp. 38-40.

Kurt, Carl E. and R.C. Johnson, Jr., 1982. Permeability of grout seals surrounding thermoplastic well casing; Ground Water, vol. 20, no. 4, pp. 415-419.

Lerch, W. and C.L. Ford, 1948. Long-time study of cement performance in concrete, chapter 3 - chemical and physical tests of the cements; Journal of the American Concrete Institute, vol. 44, no. 8, pp. 745-796.

Marsh, J.M. and J.W. Lloyd, 1990. Details of hydrochemical variations in flowing wells; Ground Water, vol. 18, no. 4, pp. 366-373.

Miller, Gary D., 1982. Uptake and release of lead, chromium and trace level volatile organics exposed to synthetic well casings; Proceedings of the Second National Symposium on Aquifer-Restoration and Ground-Water Monitoring, National Water Well Association, Dublin, Ohio, pp. 236-245.

Moehrl, Kenneth E., 1964. Well grouting and well protection; Journal of the American Water Works Association, vol. 56, no. 4, pp. 423-431.

Molz, F.J. and C.E. Kurt, 1979. Grout-induced temperature rise surrounding wells; Ground Water, vol. 17, no. 3, pp. 264-269.

Morrison, R.D., 1984. Ground-water monitoring technology, procedures, equipment and applications; Timco Manufacturing, Inc., Prairie Du Sac, Wisconsin, 111 pp.

Nass, L.I., 1976. Encyclopedia of PVC; vols. I and II, Marcel Dekker Inc., New York, 1249 pp.

National Sanitation Foundation, 1988. National Sanitation Foundation Standard 14, Ann Arbor, Michigan, 65 pp.

National Water Well Association and Plastic Pipe Institute, 1981. Manual on the selection and installation of thermoplastic water well casing; National Water Well Association, Worthington, Ohio, 64 pp.

Norton Performance Plastics, 1985. Chemware(R) high performance laboratory products, C-102; product literature, Wayne, New Jersey, 18 pp.

Parker, Louise V. and Thomas F. Jenkins, 1986. Suitability of polyvinyl chloride well casings for monitoring munitions in ground water; Ground Water Monitoring Review, vol. 6, no. 3, pp. 92-98.

Purdin, Wayne, 1980. Using nonmetallic casing for geothermal wells; Water Well Journal, vol. 34, no. 4, pp. 90-91.

Ramsey, Robert J., James M. Montgomery and George E. Maddox, 1982. Monitoring ground-water contamination in Spokane County, Washington; Proceedings of the Second National Symposium on Aquifer-Restoration and Ground-Water Monitoring, National Water Well Association, Worthington, Ohio, pp. 198-204.

Reynolds, G.W. and Robert W. Gillham, 1985. Absorption of halogenated organic compounds by polymer materials commonly used in ground water monitors; Proceedings of the Second Canadian/American Conference on Hydrogeology, National Water Well Association, Dublin, Ohio, pp. 125-132.

Scalf, M.R., J.F. McNabb, W.J. Dunlap, R.L. Cosby and J. Fryberger, 1981. Manual of ground-water quality sampling procedures, National Water Well Association, Worthington, Ohio, 93 pp.

Sosebee, J.B., P.C. Geiszler, D.L. Winegardner and C.R. Fisher, 1983. Contamination of ground-water samples with PVC adhesives and PVC primer from monitor wells; Proceedings of the ASTM Second Symposium on Hazardous and Industrial Solid Waste Testing, ASTM STP #805, R.A. Conway and W.P. Gulledge eds., American Society for Testing and Materials, Philadelphia, Pennsylvania, pp. 38-50.

Tomson, M.B., S.R. Hutchins, J.M. King and C.H. Ward, 1979. Trace organic contamination of ground water: methods for study and preliminary results; III World Congress on Water Resources, Mexico City, Mexico, vol. 8, pp. 3701-3709.

Troxell, G.E., H.E. Davis and J. W. Kelly, 1968. Composition and properties of concrete; McGraw-Hill Book Company, New York, New York, 529 pp.

United States Environmental Protection Agency, 1975. Manual of water well construction practices; United States Environmental Protection Agency, Office of Water Supply, Report No. EPA-570/9-75-001, 156 pp.

United States Environmental Protection Agency, 1986. RCRA ground-water monitoring technical enforcement guidance document; Office of Waste Programs Enforcement, Office of Solid Waste and Emergency Response, OSWER-99501.1, United States Environmental Protection Agency, 317 pp.

Verbeck, G.J. and C.W. Foster, 1950. Long-time study of cement performance in concrete with special reference to heats of hydration; American Society for Testing and Materials Proceedings, Philadelphia, Pennsylvania, pp. 1295-1262.

Villaume, James F., 1985. Investigations at sites contaminated with dense, non-aqueous phase liquids (NAPLS); Ground Water Monitoring Review, vol. 5, no. 2, pp. 60-74.

Walker, William H., 1974. Tube wells, open wells, and optimum ground-water resource development; Ground Water, vol. 12, no. 1, pp. 10-15.

Williams, Ernest B., 1981. Fundamental concepts of well design; Ground Water, vol. 19, no. 5, pp. 527-542.

Section 6
Completion of Monitoring Wells

Introduction

Once a borehole has been completed to the desired monitoring depth, the monitoring well must be properly installed. Although monitoring wells can be completed in a variety of configurations, successful completion of any monitoring well must incorporate the following objectives:

1) the well completion must permit specific stratigraphic zones to be sampled with complete confidence that the sample obtained is representative of the in-situ water quality;
2) the well completion must permit contaminants with differing physical properties to be sampled. For example, if the contaminant is denser or lighter than water and therefore sinks or floats accordingly, the well completion must allow collection of a representative ground-water sample;
3) the well must be constructed to prevent cross contamination between different zones. Cross contamination can occur if: a) the intake and/or filter pack spans more than one hydraulic unit, b) hydraulic communication between zones occurs along the borehole/grout interface, the casing/grout interface, or through voids in the seal, c) fractures intersect the wellbore, or d) if loosely compacted soils are adjacent to the borehole;
4) the well completion should minimize any disturbance created during the drilling process. For example, if the well was drilled by hollow-stem augers, the completion techniques should eliminate the void space created by the withdrawal of the augers; and
5) the well completion method should be cost effective; sample integrity, of course, is of critical importance.

To achieve these objectives, the well intake, filter pack, and annular seal must be installed using appropriate techniques. The following discussion addresses these techniques.

Well Completion Techniques

Well Intake Installation

In cohesive unconsolidated material or consolidated formations, well intakes are installed as an integral part of the casing string by lowering the entire unit into the open borehole and placing the well intake opposite the interval to be monitored. Centralizing devices are typically used to center the casing and intake in the borehole to allow uniform installation of the filter pack material around the well intake. If the borehole has been drilled by a technique that creates borehole damage, it is necessary to develop the borehole wall. When the formation is sufficiently stable, this development should be undertaken prior to setting the well intake. After the filter pack has been installed, it is very difficult to clean fractures or to remove mudcake deposits that have been formed on the borehole wall. If the borehole was drilled with the mud rotary technique, the borehole should be conditioned and the wallcake removed from the borehole wall with clean water prior to the installation of the well intake, if possible. An additional discussion on well development is found in Section 7, entitled "Monitoring Well Development."

In non-cohesive, unconsolidated materials when the borehole is drilled by a drill-through casing advancement method, such as a casing hammer or a cable tool technique, the well intake should be centered inside the casing at the end of the riser pipe and held firmly in place as the casing is pulled back. When the well intake is being completed as a natural pack, the outside diameter of the well intake should be between 1 and 2 inches smaller than the outside diameter of the casing that is being retracted. If an artificial filter pack is installed, the outside diameter of the well intake should be at least 3 to 5 inches smaller than the outside diameter of the casing that is being retracted. During artificial filter pack installation, the filter pack material must be maintained above the lower-most level of the casing as the casing is removed. This means that the filter pack is being emplaced continually during the time that the casing is being pulled back and the well intake is being exposed. This procedure minimizes the development of excessive void space adjacent to the well intake as the casing is pulled back.

When the casing is installed through the hollow stem of a hollow-stem auger, an artificial filter pack generally should be emplaced because of the disparity between the outside diameter of the auger flights and the usual 2-inch or 4-inch outside diameter of the casing and well intake that are being installed within the auger flights. If the augers are withdrawn and the formation allowed to collapse around the well intake without installing an artificial filter pack to stabilize the borehole wall, the materials that are adjacent to the well intake may be loose and poorly compacted. Excessive void space adjacent to the well intake can provide an avenue for cross contamination or migration of contaminants. This void or loosely-compacted zone may also interfere with the placement of proper seals.

Loosely-compacted material is difficult to adequately develop from within a small-diameter borehole. The surging methods that are available generally cannot recompact the materials adjacent to the well intake to prevent bentonite or cement grout from migrating downward into the screened zone.

Additionally, where collapse is permitted, the collapsed zone around the well intake is highly disturbed and is no longer stratified similar to the stratification of the natural formation. As a consequence, there will be mixing of horizontal zones, and the possibility exists that chemical changes can be induced by the changes in the physical environment.

Where wells are installed in unconsolidated material by the dual-wall reverse-circulation method, the well casing and well intake are installed through the bit. The only option for completion with this construction method is to allow the materials to collapse around the screen. In this instance, a greater sustained effort is suggested in well-development procedures than is normally required.

Filter Pack Installation

Several methods of emplacing artificial filter packs in the annular space of a monitoring well are available, including: 1) gravity (free fall), 2) tremie pipe, 3) reverse circulation, and 4) backwashing. The last two methods involve the addition of clean water to the filter pack material during emplacement. This addition of fluid can cause chemical alteration of the environment adjacent to the well and pose long-term questions about the representativeness of water samples collected from the well. As with other phases of monitoring well construction, fluids (clean) should only be added when no other practicable method exists for proper filter pack emplacement. An additional discussion on choosing filter pack material size can be found in the section entitled "Artificially Filter-Packed Wells."

Placement of filter packs by gravity or free fall can be successfully accomplished only in relatively shallow wells where the probability of bridging or segregation of the filter pack material is minimized. Bridging causes unfilled voids in the filter pack and may prevent the filter pack material from reaching the intended depth. Segregation of filter pack material can result in a well that consistently produces sediment-laden water samples. Segregation is a problem particularly in wells with a shallow static water level. In this situation, the filter pack material falls through the column of water at different rates. The greater drag exerted on smaller particles due to their greater surface area-to-weight ratio causes finer grains to fall at a slower rate than coarser grains. Thus, coarser materials will comprise the lower portion of the filter pack and finer materials will constitute the upper part (Figure 64). Segregation may not be a problem when emplacing truly uniform filter packs where the uniformity coefficient is less than 2.5, but placement by free fall is not recommended in any other situation (Driscoll, 1986).

With the tremie pipe emplacement method, the filter pack material is introduced through a rigid tube or pipe via gravity directly into the interval adjacent to the well intake (Figure 65). Initially, the end of the pipe is positioned at the bottom of the well intake/borehole annulus. The filter pack material is then poured down the tremie pipe and the tremie is raised periodically to allow the filter pack material to fill the annular space around the well intake. The minimum diameter of a tube used for a tremie pipe is generally 1 1/2 inches; larger-diameter pipes are advisable for filter pack materials that are coarse-grained or characterized by uniformity coefficients that exceed 2.5 (California Department of Health Services, 1986). When installing a filter pack with a uniformity coefficient greater than 2.5 in wells deeper than 250 feet, a variation of the standard tremie

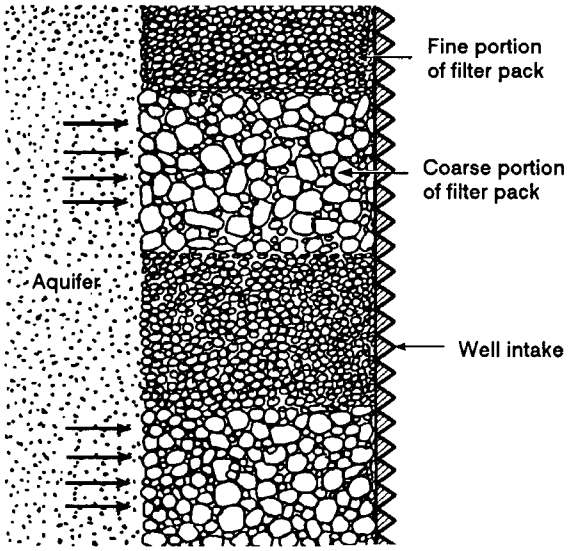

Figure 64. Segregation of artificial filter pack materials caused by gravity emplacement.

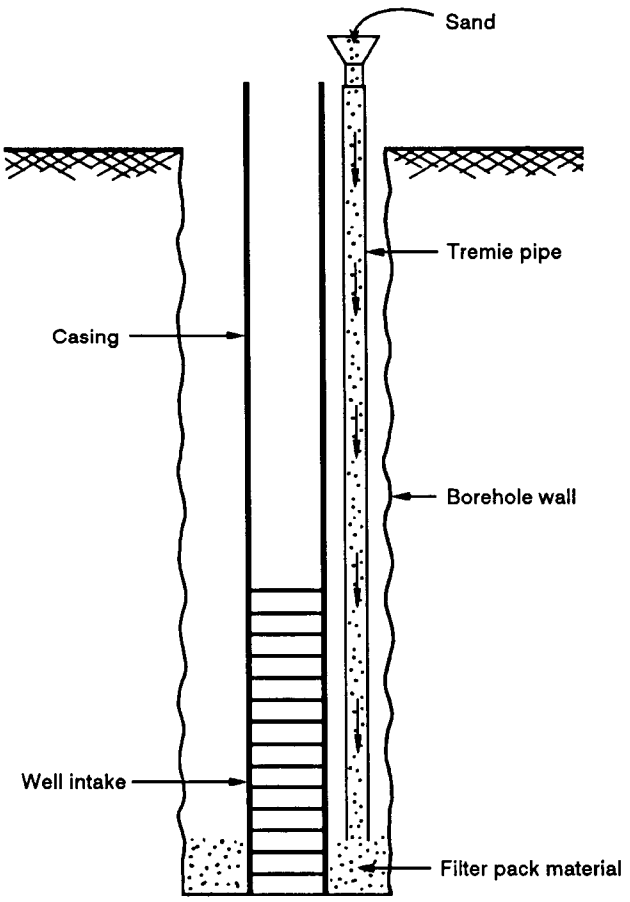

Figure 65. Tremie-pipe emplacement of artificial filter pack materials.

method that employs a pump to pressure feed the materials into the annulus is suggested by the California Department of Health Services (1986).

In the reverse circulation method, a filter pack material and water mixture is fed into the annulus around the well intake. Return flow of water passes into the well intake and is then pumped to the surface through the riser pipe/casing (Figure 66). The filter pack material should be introduced into the annulus at moderate rate to allow for an even distribution of material around the well intake. Care must be exercised when pulling the outer casing so that the riser pipe is not also pulled.

Backwashing filter pack material into place is accomplished by allowing filter pack material with a uniformity coefficient of 2.5 or less to fall freely through the annulus while concurrently pumping clean fresh water down the casing, through the well intake and back up the annulus (Figure 67). Backwashing is a particularly effective method of filter-pack emplacement in cohesive, non-caving geologic materials. This method also minimizes the formation of voids that tend to occur in tremie pipe emplacement of the filter pack.

Annular Seal Installation

The two principal materials used for annular seals are bentonite and neat cement. Often a combination of the two materials is used. Because the integrity of ground-water samples depends on good seals, the proper emplacement of these seals

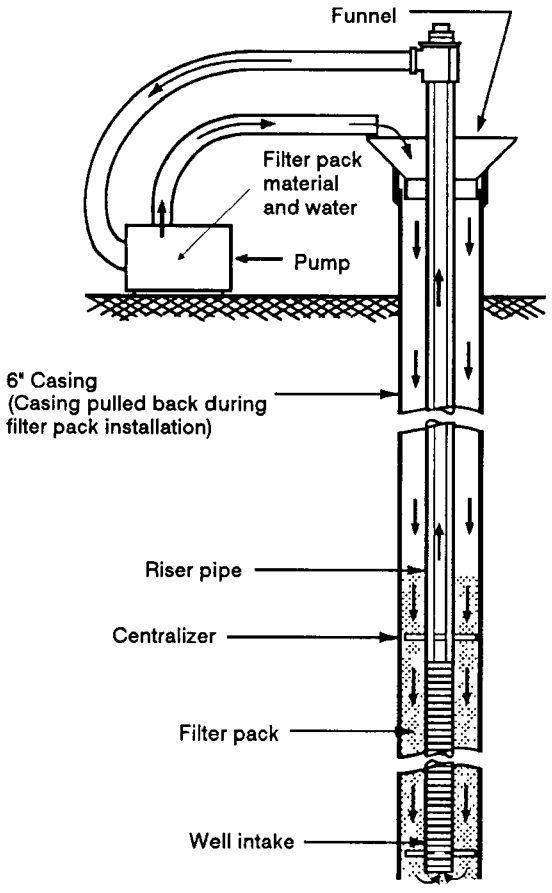

Figure 66. Reverse-circulation emplacement of artificial filter pack materials.

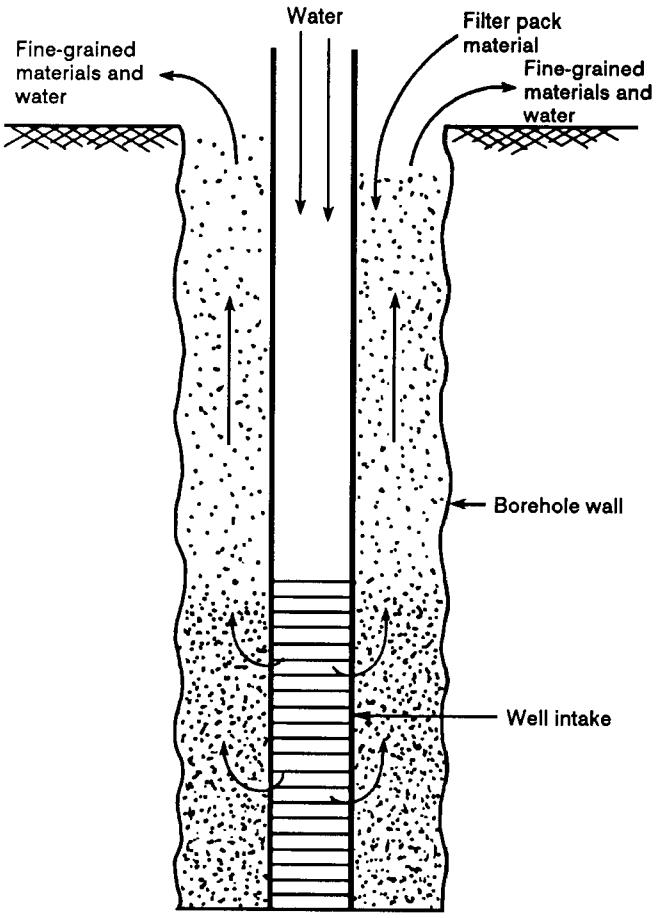

Figure 67. Emplacement of artificial filter pack material by backwashing.

is paramount. An additional discussion on annular seals can be found in the section entitled "Annular Seals. "

Bentonite —

Bentonite may be emplaced as an annular seal in either of two different forms: 1) as a dry solid or 2) as a slurry. Typically only pelletized or granular bentonite is emplaced dry; powdered bentonite is usually mixed with water at the surface to form a slurry and then is added to the casing/borehole annulus. Additional discussion on properties of bentonite can be found in Chapter 5 in the section entitled "Materials Used For Annular Seals."

Dry granular bentonite or bentonite pellets may be emplaced by the gravity (free fall) method by pouring from the ground surface. This procedure should only be used in relatively shallow monitoring wells that are less than 30 feet deep with an annular space of 3 inches or greater. When the gravity method is used, the bentonite should be tamped with a tamping rod after it has been emplaced to ensure that no bridging of the pellets or granules has occurred. Where significant thicknesses of bentonite are added, tamping should be done at selected intervals during the emplacement process. In deeper wells, particularly where static water levels are shallow, emplacing dry bentonite

via the gravity method introduces both a very high potential for bridging and the likelihood that sloughing material from the borehole wall will be included in the seal. If bridging occurs, the bentonite may never reach the desired depth in the well; if sloughing occurs, "windows" of high permeability may develop as the sloughed material is incorporated into the seal. Either situation results in an ineffective annular seal that may allow subsequent contamination of the well.

In wells deeper than 30 feet, granular or pelletized bentonite can be conveyed from the surface directly to the intended depth in the annulus by a tremie pipe. Pelletized bentonite is sometimes difficult to work with in small-diameter tremie pipes; a minimum of 1 1/2-inch inside diameter pipe should be used with 1/4-inch diameter pellets to minimize bridging and subsequent clogging of the bentonite inside the tremie pipe. Larger-diameter tremie pipes should be used with larger-diameter pellets. Where a seal of either pelletized or granular bentonite must be placed at considerable depth beneath the water surface, the tremie pipe can be kept dry on the inside by keeping it under gas pressure (Riggs and Hatheway, 1986). A dry tremie pipe has a much lower potential for bridging in the tremie because the material does not have to fall through a partially water-filled pipe to reach the desired depth.

Bentonite slurry can be an effective well seal only if proper mixing, pumping, and emplacement methods are used. Bentonite powder is generally mixed with water in a batch mixer and the slurry is pumped under positive pressure through a tremie pipe down the annular space using some variety of positive displacement pump (i.e., centrifugal, piston, diaphragm, or moyno-type pump). All hoses, tubes, pipes, water swivels, and other passageways through which the slurry must pass should have a minimum inside diameter of 1/2 inch. A larger diameter (e.g., 1-inch) tremie pipe is preferred. The tremie pipe should be placed just above the filter pack or at the level where non-cohesive material has collapsed into the borehole (Figure 68). The tremie pipe should be left at this position during the emplacement procedure so that the slurry fills the annulus upward from the bottom. This allows the slurry to displace ground water and any loose-formation materials in the annular space. The tremie pipe can be raised as the slurry level rises as long as the discharge of the pipe remains submerged at least a foot beneath the top of the slurry. The tremie pipe can be removed after the slurry has been emplaced to the intended level in the annulus. The slurry should never be emplaced by free fall down the annulus. Free fall permits the slurry to segregate thus preventing the formation of an effective annular seal.

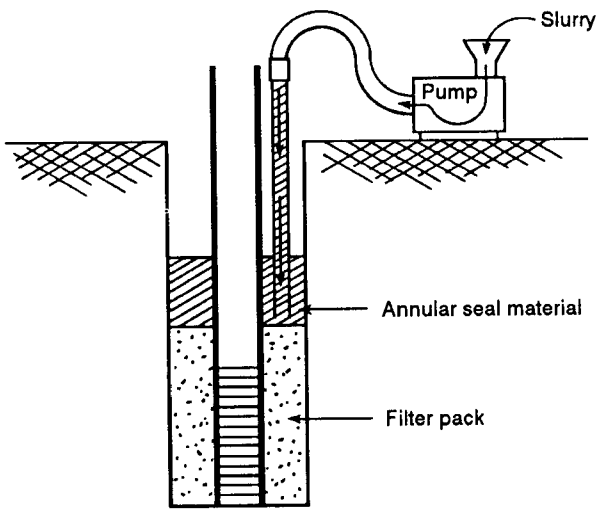

Figure 68. Tremie-pipe emplacement of annular seal material (either bentonite or neat cement slurry).

Bentonite emplaced as a slurry will already have been hydrated to some degree prior to emplacement, but the ability to form a tight seal depends on additional hydration and saturation after emplacement. Unless the slurry is placed adjacent to saturated geologic materials, sufficient moisture may not be available to maintain the hydrated state of the bentonite. If the slurry begins to dry out, the seal may dessicate, crack, and destroy the integrity of the seal. Therefore, bentonite seals are not recommended in the vadose zone.

Curing or hydration of the bentonite seal material occurs for 24 to 72 hours after emplacement. During this time, the slurry becomes more rigid and eventually develops strength. Well development should not be attempted until the bentonite has completely hydrated. Because of the potential for sample chemical alteration posed by the moderately high pH and high cation exchange capacity of bentonite, a bentonite seal should be placed approximately 2 to 5 feet above the top of the well intake and separated from the filter pack by a 1-foot thick layer of fine silica sand.

Neat Cement —

As with a bentonite slurry, a neat cement grout must be properly mixed, pumped, and emplaced to ensure that the annular seal will be effective. According to the United States Environmental Protection Agency (1975), neat cement should only be emplaced in the annulus by free fall when: 1) there is adequate clearance (i.e., at least 3 inches) between the casing and the borehole, 2) the annulus is dry, and 3) the bottom of the annular space to be filled is clearly visible from the surface and not more than 30 feet deep. However, to minimize segregation of cement even in unsaturated annular spaces, free fall of more than 15 feet should not be attempted in monitoring wells. If a neat cement slurry is allowed to free fall through standing water in the annulus, the mixture tends to be diluted or bridge after it reaches the level of standing water and before it reaches the intended depth of emplacement. The slurry also may incorporate material that is sloughed from the borehole wall into the seal. If the sloughed material has a high permeability, the resultant seal can be breached through the inclusion of the sloughed material.

In most situations, neat cement grout should be emplaced by a tremie pipe. The annular space must be large enough that a tremie pipe with a minimum inside diameter of 1 1/2 inches can be inserted into the annulus to within a few inches of the bottom of the space to be sealed. Grout may then either be pumped through the tremie pipe or emplaced by gravity flow through the tremie pipe into the annular space. The use of a tremie pipe permits the grout to displace ground water and force loose formation materials ahead of the grout. This positive displacement minimizes the potential for contamination and/or

dilution of the slurry and the bridging of the mixture with upper formation material.

In pressure grouting, the cement discharges at the bottom of the annular space and flows upward around the inner casing until the annular space is completely filled. A side discharge tremie may be used to lessen the possibility that grout might be forced into the filter pack. Depending on pressure requirements, the tremie pipe may be moved upward as the slurry is emplaced or it may be left at the bottom of the annulus until the grouting is completed. If the tremie pipe is not retracted while grouting, the tremie pipe should be removed immediately afterward to avoid the possibility of the grout setting around the pipe. If this occurs, the pipe may be difficult to remove and/or a channel may develop in the grout as the pipe is removed.

In gravity emplacement, the tremie is lowered to the bottom of the annular space and filled with cement. The tremie pipe is slowly retracted, and the weight of the column forces the cement into the annular space. In both gravity emplacement and pressure grouting, the discharge end of the tremie pipe should remain submerged at least one foot below the surface of the grout at all times during emplacement, and the pipe should be kept full of grout without air space. To avoid the formation of cold joints, the grout should be emplaced in one continuous pour before initial setting of the cement or before the mixture loses fluidity. Curing time required for a typical Type I Portland cement to reach maximum strength is a minimum of 40 hours.

Moehrl (1964) recommends checking the buoyancy force on the casing during cementing with grout. Archimede's principle states that a body wholly or partially immersed in a fluid is buoyed up by a force equal to the weight of the fluid displaced by the body. Failure to recognize this fact may result in unnoticed upward displacement of the casing during cementing. This is particularly true of lighter thermoplastic well casings. Formulas for computing buoyancy are provided by Moehrl (1964).

Types of Well Completions

The ultimate configuration of a monitoring well is chosen to fulfill specific objectives as stated at the beginning of this section. Monitoring wells can be completed either as single wells screened in either short or long intervals, single wells screened in multiple zones or multiple wells completed at different intervals in one borehole. The decision as to which type of monitoring well configuration to install in a specific location is based on cost coupled with technical considerations and practicality of installation.

In shallow installations, it generally is more economical to complete the monitoring wells as individual units that are in close proximity to each other and avoid the complexity of multiple-zone completions in a single borehole. In deeper installations where the cost of drilling is high relative to the cost of the materials in the well and where cost savings can be realized in improved sampling procedures, it may be better to install a more sophisticated multilevel sampling device. The cost of these completions are highly variable depending on the specific requirements of the job. Cost comparisons should be made on a site-by-site basis. Individual well completions will almost always be more economical at depths of less than 80 feet. A discussion of the types of monitoring well completions is presented below.

Single-Riser/Limited-Interval Wells

The majority of monitoring wells that are installed at the present time are individual monitoring wells screened in a specific zone. Well intakes are usually moderate in length, ranging from 3 to 10 feet. These wells are individually installed in a single borehole with a vertical riser extending from the well intake to the surface. Because the screened interval is short, these are the easiest wells to install and develop. A typical example of this design is shown in Figure 21.

The intent of a well with this design is to isolate a specific zone from which water-quality samples and/or water levels are to be obtained. If the well intake crosses more than one zone of permeability, the water sample that is collected will represent the quality of the more permeable zone. If a pump is installed just above the well intake and the well is discharged at a high rate, the majority of the sample that is obtained will come from the upper portion of the well intake. If the pump is lowered to the mid-section of the well intake and pumped at a low rate, the bulk of the sample will come from the area that is immediately adjacent to the zone of the pump intake. At high pumping rates in both isotropic and stratified formations, flow lines converge toward the pump so that the sample that is obtained is most representative of the ground water moving along the shortest flow lines. If the well is not properly sealed above the well intake, leakage may occur from upper zones into the well intake.

Single-Riser/Flow-Through Wells

Flow-through wells consist of a long well intake that either fully or nearly fully penetrates the aquifer. The well intake is connected to an individual riser that extends to the surface. Wells of this type are typically small in diameter and are designed to permit water in the aquifer to flow through the well in such a manner as to make the well "transparent" in the ground-water flow field. An illustration of this type of well is shown in Figure 69.

This type of well produces water samples that are a composite of the water quality intercepted when the well is surged,

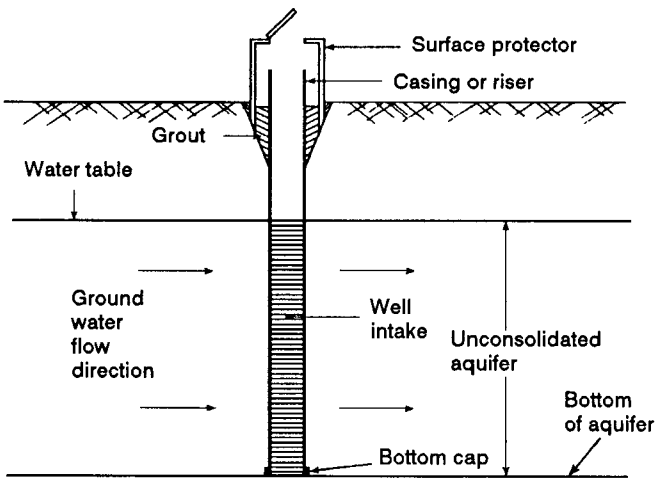

Figure 69. Diagram of a single-riser/flow-through well.

bailed or pumped heavily. For example, if three or more well volumes are evacuated prior to sampling, the sample obtained will be a composite sample representative of the more permeable zones penetrated by the well intake; it will not be possible to define the zone(s) of contribution. However, if the well is allowed to maintain a flow-through equilibrium condition and if a sampler is lowered carefully to the selected sampling depth, a minimally disturbed water sample can be obtained by either taking a grab sample or by pumping at a very low rate. This sample will be substantially representative of the zone in the immediate vicinity of where the sample was taken. If the sampler is successively lowered to greater depths and the water within the well intake is not agitated, a series of discrete samples can be obtained that will provide a reasonably accurate profile of the quality of the water that is available in different vertical zones. Furthermore, if the flow-through condition is allowed to stabilize after any prior disturbance and a downhole chemical-profiling instrument is lowered into the well, closely-spaced measurements of parameters such as Eh, pH, dissolved oxygen, conductivity and temperature can be made in the borehole. This provides a geochemical profile of conditions in the aquifer. In specific settings, wells of this design can provide water-quality information that is at least as reliable as either the information obtained by multiple-zone samplers in a single well or by information from multiple nested wells. In either application, the described flow-through well design is lower in cost.

Nested Wells

Nested wells consist of either a series of: 1) single-riser/limited-interval wells that are closely spaced so as to provide data from different vertical zones in close proximity to each other or 2) multiple single-riser/limited-interval wells that are constructed in a single borehole. Illustrations of these designs are shown in Figures 70a and 70b. Wells of these designs are used to provide samples from different zones of an aquifer(s) in the same manner as individual wells.

Multiple wells are constructed in a single borehole by drilling a 10-inch or larger diameter borehole, then setting one, two, or three 2-inch single-riser/limited-interval wells within the single borehole. The deepest well intake is installed first, the filter pack emplaced, and the seal added above the filter pack. The filter pack provides stabilization of the deepest zone. After the seal is installed above the deepest zone, the next succeeding (upward) well intake is installed and the individual riser extended to the surface. This next well intake is filter-packed and

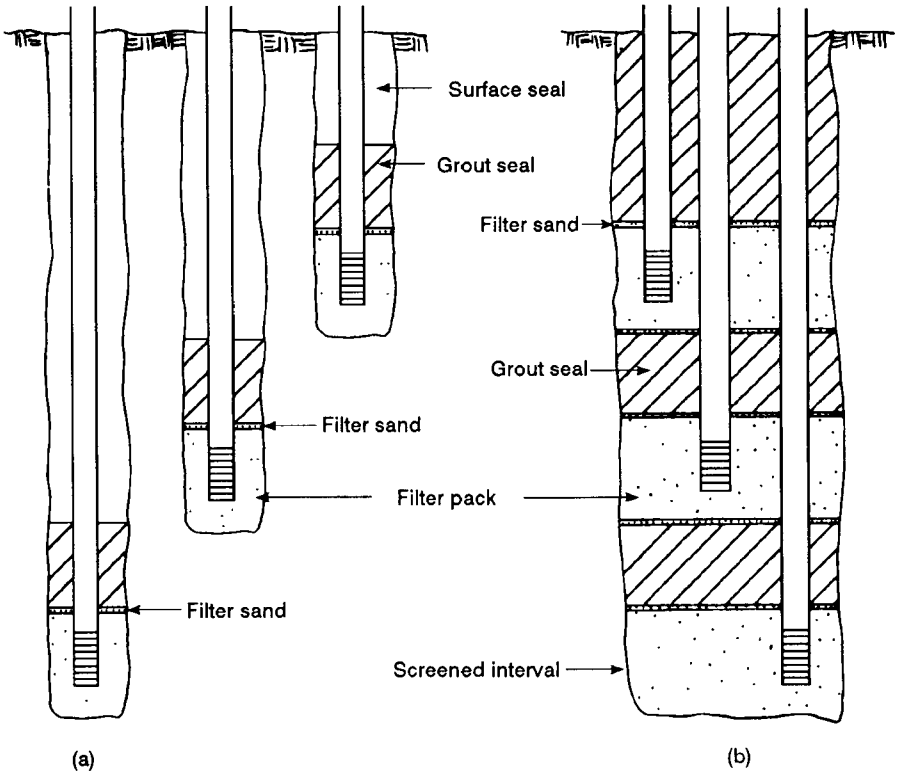

Figure 70. Typical nested well designs: a) series of single riser/limited interval wells in separate boreholes and b) multiple single riser/limited interval wells in a single borehole (after Johnson, 1983).

a second seal is placed above the filter pack that is emplaced around the second well intake. If there is a long vertical interval between successive well intakes, neat cement grout is emplaced above the lower seal. Where vertical separation permits, a 1-foot layer of fine silica sand should be emplaced between the filter packs and sealants. This sand helps prevent sealant infiltration into the filter pack and loss of filter pack into the sealant. This procedure is repeated at all desired monitoring intervals. Because each riser extends to the surface and is separate from the other risers, a good seal must be attained around each riser as it penetrates through successive bentonite seals. A substantial problem with this type of construction is leakage along the risers as well as along the borehole wall.

The primary difficulty with multiple completions in a single borehole is that it is difficult to be certain that the seal placed between the screened zones does not provide a conduit that results in interconnection between previously non-connected zones within the borehole. Of particular concern is leakage along the borehole wall and along risers where overlying seals are penetrated. It is often difficult to get an effective seal between the seal (e.g., bentonite or cement grout) and the material of the risers.

Multiple-Level Monitoring Wells

In addition to well nests that sample at multiple levels in a single location, a variety of single-hole, multilevel sampling devices are available. These sampling devices range from the simple field-fabricated, PVC multilevel sampler shown in Figure 71 to the buried capsule devices that are installed in a single borehole, as shown in Figure 72. The completion of these wells is similar to the completion of nested wells in a single borehole. Some of these samplers have individual tubing connections that extend to the surface. Samples are collected from the tubing. With some forms of instrumentation, water levels can also be obtained. There are, additionally, more sophisticated sampling devices available, such as shown in Figure 73. These consist of multiple-zone inflatable packers that can be installed in a relatively small borehole. They permit the sampling of formation fluids at many intervals from within a single borehole. Disadvantages of these devices are: 1) it is difficult, if not impossible, to repair the device if clogging occurs, 2) it is difficult to prevent and/or evaluate sealant and packer leakage and 3) these installations are more expensive than single-level monitoring wells.

Simple vacuum-lift multiple port devices can be used in shallow wells where samples can be obtained from the individual tubing that extends to the surface. With increasing depth, greater sophistication is required and a variety of gas-lift sampling devices are available commercially. Still more sophisticated sampling devices are available for very deep installations. These devices require durable, inflatable packer systems and downhole tools to open and close individual ports to obtain formation pressure readings and take fluid samples. These can be used in wells that are several thousand feet deep.

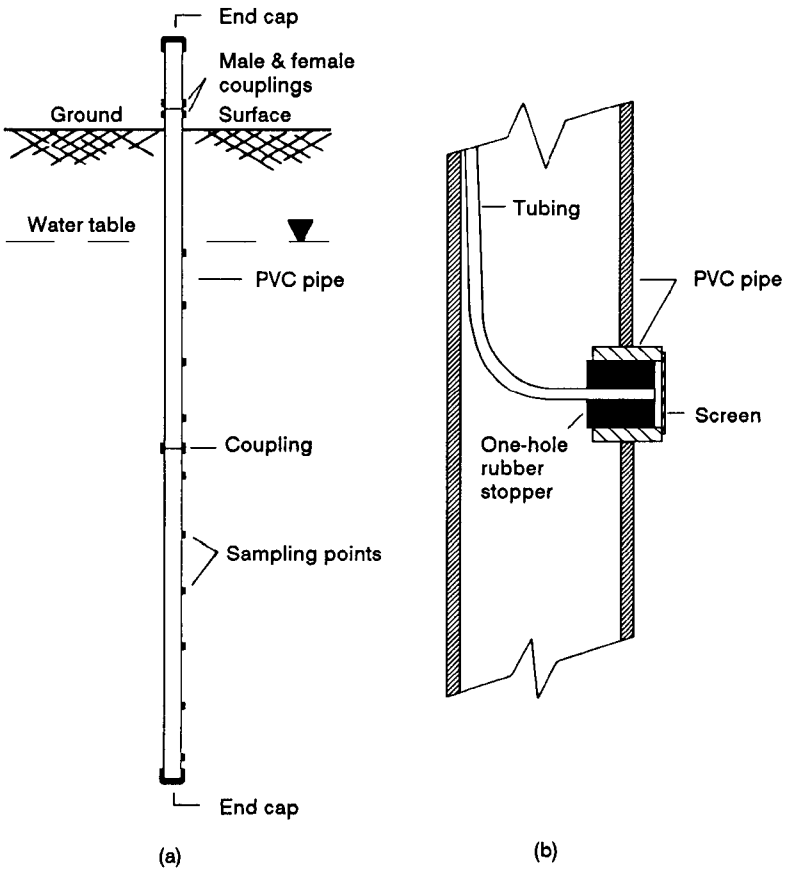

Figure 71. Field-fabricated PVC multilevel sampler: a) field installation and b) cross section of sampling point (Pickens et al., 1981).

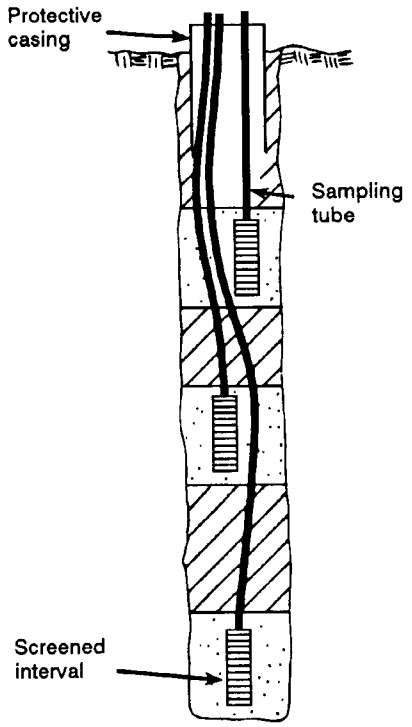

Figure 72. Multilevel capsule sampling device installation (Johnson, 1983).

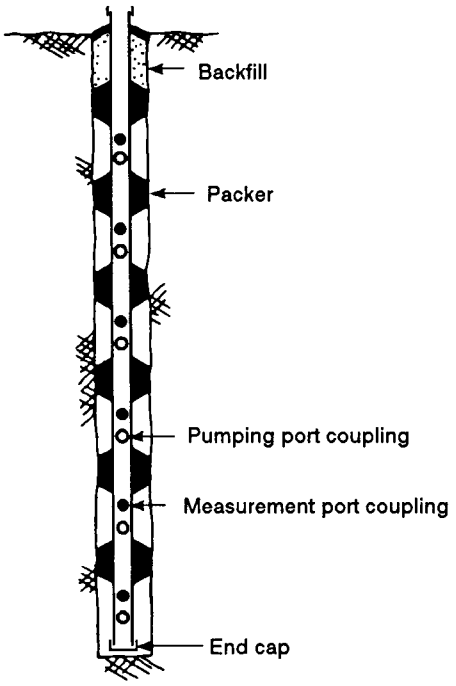

Figure 73. Multiple zone inflatable packer sampling installation (Rehtlane and Patton, 1982).

General Suggestions for Well Completions

1) Use formation samples, sample penetration logs, drilling logs, geophysical logs, video logs and all other pertinent information that can be obtained relating to the well installation to make decisions on well completion. Make every attempt to define the stratigraphy before attempting to install well intakes.
2) Be aware of the control that stratigraphy exerts over flow-line configuration when the sampling pump is and is not operating. In an isotropic aquifer, the sample is representative of the quality of formation water in the immediate vicinity of the pump. In a fractured system or a stratified aquifer, flow can be highly directional and confined.
3) Install the well intake in the exact zone opposite the desired monitoring depth. If the well is designed to intercept "floaters," the well intake must extend high enough to provide for fluctuations in the seasonal water table. If the well is designed to monitor "sinkers," the topography of the bottom-most confining layer must be sufficiently defined such that a well intake can be installed at the topographical points where the sinkers can be intercepted. If there is a non-aqueous phase present, the well intake must intersect the appropriate pathways. Vertical variations in hydraulic conductivity must be recognized as well as horizontal variations. In consolidated rock, fracture zones through which migration can occur must be intercepted. At all times, the three-dimensional aspect of contaminant migration must be taken into consideration.
4) Aquifer disruption must be minimized during the completion process. Void space should not be unnecessarily created when pulling back casing or augers. Non-cohesive material collapse around the well intake should be minimized except where natural filter pack is used.
5) The depth and diameter limitations imposed by the type of equipment and materials used in monitoring well construction must be considered as an integral part of well completion. The filter pack must be uniformly emplaced; bentonite and cement grout must be emplaced by positive methods so that the zones that are supposed to be isolated are truly isolated by positive seals. The design and installation of a monitoring well are impacted by the constraints of cost, but the errors resulting from a well that is improperly constructed are much more expensive than a well that is properly constructed. The extra time and cost of constructing a well properly, and being as sure as possible that the information being obtained is reliable, is well worth the extra cost of careful installation.

References

California Department of Health Services, 1986. The California site mitigation decision tree manual; California Department of Health Services, Sacramento, California, 375 pp.

Driscoll, Fletcher G., 1986. Ground water and wells; Johnson Division, St. Paul, Minnesota, 1089 pp.

Johnson, Thomas L., 1983. A comparison of well nests versus single-well completions; Ground Water Monitoring Review, vol. 3, no. 1, pp. 76-78.

Moehrl, Kenneth E., 1964. Well grouting and well protection; Journal of the American Water Works Association, vol. 56, no. 4, pp. 423-431.

Pickens, J.F., J.A. Cherry, R.M. Coupland, G.E. Grisak, W.F. Merritt and B.A. Risto, 1981. A multilevel device for ground-water sampling; Ground Water Monitoring Review, vol. 1, no. 1, pp. 48-51.

Rehtlane, Erik A. and Franklin D. Patton, 1982. Multiple port piezometers vs. standpipe piezometers: an economic comparison; Proceedings of the Second National Symposium on Aquifer Restoration and Ground-Water Monitoring, National Water Well Association, Worthington, Ohio, pp. 287-295.

Riggs, Charles O. and Allen W. Hatheway, 1988. Groundwater monitoring field practice - an overview; Ground-Water Contamination Field Methods, Collins and Johnson editors, ASTM Publication Code Number 04-963000-38, Philadelphia, Pennsylvania, pp. 121-136.

United States Environmental Protection Agency, 1975. Manual of water well construction practices; United States Environmental Protection Agency, Office of Water Supply, EPA-570/9-75-001, 156 pp.

Section 7
Monitoring Well Development

Introduction/Philosophy

The objective of monitoring well development is frequently misconstrued to be merely a process that enhances the flow of ground water from the formation into the well and that minimizes the amount of sediment in the water samples collected from the well. These are the proper objectives for the development of a production well but they do not fulfill the requirements for a monitoring well. A monitoring well should be a "transparent", window into the aquifer from which samples can be collected that are truly representative of the quality of water that is moving through the formation. This objective is difficult to attain and is unattainable in some instances. However, the objective should not be abandoned because of the difficulty.

The interpretation of any ground-water sample collected from a monitoring well should reflect the degree of success that has been reached in the development of the well and the collection of the sample. This objective is frequently overlooked in the literature and in much of the work that has been done in the field. Further research is required before the reliability of samples taken from a monitoring well can be effectively substantiated. The United States Environmental Protection Agency (1986) in the Technical Enforcement Guidance Document (TEGD) states that, "a recommended acceptance/rejection value of five nephelometric turbidity units (NTU) is based on the need to minimize biochemical activity and possible interference with ground-water sample quality." The TEGD also outlines a procedure for determining the source of turbidity and usability of the sample and well. There are instances where minimizing turbidity and/or biochemical activity will result in a sample that is not representative of water that is moving through the ground. If the ground water moving through the formation is, in fact, turbid, or if there is free product moving through the formation, then some criteria may cause a well to be constructed such that the actual contaminant that the well was installed to monitor will be filtered out of the water. Therefore, it is imperative that the design, construction and development of a monitoring well be consistent with the objective of obtaining a sample that is representative of conditions in the ground. An evaluation of the degree of success in attaining this objective should always be included and considered in conjunction with the laboratory and analytical work that is the final result of the ground-water sample-collection process.

If the ultimate objective of a monitoring well is to provide a representative sample of water as it exists in the formation, then the immediate objective and challenge of the development program is to restore the area adjacent to the well to its indigenous condition by correcting damage done to the formation during the drilling process. This damage may occur in many forms: 1) if a vibratory method such as driving casing is used during the drilling process, damage may be caused by compaction of the sediment in place; 2) if a compacted sand and gravel is drilled by a hollow-stem auger and then allowed to collapse around the monitoring well intake, damage may be the resultant loss of density of the natural formation; 3) if a drilling fluid of any type is added during the drilling process, damage may occur by the infiltration of filtrate into the formation; and 4) if mud rotary, casing driving or augering techniques are used during drilling, damage may be caused by the formation of a mudcake or similar deposit that is caused by the drilling process. Other formation damage may be related to specific installations. Some of this damage cannot be overcome satisfactorily by the current capability to design and develop a monitoring well. One important factor is the loss of stratification in the monitored zone. Most natural formations are stratified; the most common stratigraphic orientation is horizontal. The rate of water movement through different stratigraphic horizons varies; sorption rates may differ as stratigraphy changes; and chemical interaction between contaminants and the formation materials and ground water can vary between different horizons. During the development process, those zones with the highest permeability will be most affected by the development of the well. Where a well intake crosses stratigraphic boundaries of varying permeability, the water that moves into and out of the well intake will be moving almost exclusively into and out of the high permeability zones.

Factors Affecting Monitoring Well Development

There are three primary factors that influence the development of a monitoring well: 1) the type of geologic material, 2) the design and completion of the well and 3) the type of drilling technology employed in the well construction. From these factors it is also possible to estimate the level of effort required during development so that the monitoring well will perform satisfactorily.

Type of Geologic Material

The primary geologic consideration is whether or not the monitoring well intake will be installed in consolidated rock or unconsolidated material. If the intake is installed in consolidated rock or cohesive unconsolidated material, the assumption can often be made that the borehole is stable and was stable during the construction of the monitoring well. In a stable borehole, it is generally easier to: 1) install the well intake(s) at the prescribed setting(s), 2) uniformly distribute and maintain the proper height of a filter pack (if one was installed) above the well intake(s), 3) place the bentonite seal(s) in the intended

location and 4) emplace a secure surface seal. However, if the well intake is opposite unconsolidated material, the borehole may not be or may not have been stable during well installation. Depending on the degree of borehole instability during the well completion process, the well intake, filter pack, bentonite seal and/or surface seal may not have been installed as designed. As a consequence, there is generally a greater degree of difficulty expected in the development of wells that are installed in unconsolidated formations.

The permeability of the formation also influences the ease of development. Where permeability is greater, water moves more easily into and out of the formation and development is accomplished more quickly. In unconsolidated formations, the ease or difficulty of development is less predictable because there is considerable variation in the grain size, sorting, and stratification of many deposits. Zones that are developed and water samples that are collected will be more representative of the permeable portions of a stratified aquifer and may not be very representative of the less permeable zones.

Design and Completion of the Well

A monitoring well can be installed relatively easily at a site where the total depth of the well will be 25 feet; the static water level is approximately 15 feet; and the monitored interval is a clean, well-sorted sand and gravel with a permeability that approximates 1×10^{-1} centimeters per second. However, a monitoring well is much more difficult to install at a site where the depth of the well will be 80 feet; the well will be completed in an aquifer beneath an aquitard; the water table in the shallow aquifer is approximately 20 feet deep; the piezometric surface of the semi-confined aquifer is approximately 10 feet deep; and the monitored interval in the deeper zone is composed of fine-grained sand with silt. Construction of the monitoring well in this scenario will be difficult by any technique. No matter what construction method is used, a considerable amount of time will be required for well completion and problems can be anticipated during setting of the well intake, placement of the filter pack, placement of the bentonite seal or placement of the grout. Difficulties may also be experienced during the development process.

Another difficult monitoring well installation is where the well intake is placed opposite extremely fine-grained materials. For example, extremely fine-grained materials often occur as a series of interbedded fine sands and clays such as might be deposited in a sequence of lake deposits. A well intake set in the middle of these saturated deposits must be completed with an artificial filter pack. However, because the deposits are unstable, it is difficult to achieve a good distribution of the filter-pack material around the well intake during installation. Furthermore, even if the filter pack installation is successful, it is not possible to design a sufficiently fine-grained filter pack that will prevent the intrusion of the clays that are intimately associated with the productive fine-grained sand. As a consequence, every time the well is agitated during the sampling process, the clays are mobilized and become part or all of the turbidity that compromises the value of the ground-water samples. There currently is no design or development procedures that are able to fully overcome this problem. The only way to minimize the intrusion of the clays is to install an extremely fine-grained porous filter. This filter has very limited utility because it rapidly becomes clogged by the clays that are being removed. After a short operational period, insufficient quantities of samples are obtained and the filter can no longer be used.

Where an artificial filter pack is installed, the filter pack must be as thin as possible if the development procedures are to be effective in removing fine particulate material from the interface between the filter pack and the natural formation. Conversely, the filter pack must be thick enough to ensure that during the process of construction, it is possible to attain good distribution of the filter pack material around the screen. It is generally considered that the minimum thickness of filter pack material that can be constructed effectively is 2 inches. Two inches is a desirable thickness in situations where there is adequate control to ensure good filter pack distribution. If there are doubts about the distribution, then the filter pack must be thickened to assure that there is adequate filtration and borehole support.

In natural filter pack installations where the natural formation is allowed to collapse around the well intake, the function of development is twofold: 1) to remove the fine-particulate materials that have been emplaced adjacent to the well intake and 2) to restore the natural flow regime in the aquifer so that water may enter the well unimpeded.

It is easier to develop monitoring wells that are larger in diameter than it is to develop small-diameter wells. For example, mechanical surging or bailing techniques that are effective in large-diameter wells are much less effective when used in wells that are less than 2 inches in diameter because equipment to develop smaller-diameter wells has limited availability. Further, in small-diameter wells when the depths become excessive, it is difficult to maintain straightness and alignment of the borehole because of the drilling techniques that are commonly used. It may become imperative in this situation to use centralizers on the casing and well intake that are being installed within these boreholes or to use other methods to center the casing or ensure straight holes.

Type of Drilling Technology

The drilling process influences not only development procedures but also the intensity with which these procedures must be applied. Typical problems associated with special drilling technologies that must be anticipated and overcome are as follows: 1) when drilling an air rotary borehole in rock formations, fine particulate matter typically builds up on the borehole walls and plugs fissures, pore spaces, bedding planes and other permeable zones. This particulate matter must be removed and openings restored by the development process; 2) if casing has been driven or if augers have been used, the interface between the natural formation and the casing or the auger flights are "smeared" with fine-particulate matter that must subsequently be removed in the development process; 3) if a mud rotary technique is used, a mudcake builds up on the borehole wall that must be removed during the development process; and 4) if there have been any additives, as may be necessary in mud rotary, cable tool or augering procedures, then the development process must attempt to remove all of the fluids that have infiltrated into the natural formation.

Well Development

Very little research has been performed that specifically addresses movement of fluid, with or without contaminants present, through a stratified aquifer into monitoring wells. Ground-water flow theory is based on the primary assumptions of homogeneity and isotropism of the formation. In production wells, these assumptions are acceptable because the aquifer is stressed over a sufficient area for variations to be "averaged." Most discussions of monitoring-well flow characteristics are based on the acceptance of these assumptions. However, these are not always valid assumptions for attaining the objectives of monitoring wells.

Where it is intended to intercept a contaminant in a restricted zone of a three-dimensional flow field, a monitoring well must be installed and developed with a much greater precision than is normal for production wells. The relative movement of fluid in specific zones becomes significantly more important than the gross yield. Both installation and development must be performed with a "spot precision" that preserves in situ conditions and permits the collection of a representative sample.

The methods that are available for the development of monitoring wells have been inherited from production well development practices. These methods include: 1) surging with a surge block, 2) bailing, 3) pumping, overpumping and backwashing through the pump, 4) airlift pumping and 5) air surging and jetting. A number of authors have written about these available methods of development for monitoring wells. A summary of these articles is contained in Table 36.

Based on a review of the literature and on a wide range of actual field practices, a few generalizations about development of monitoring wells can be made:

1) using air for well development can result in chemical alteration of the ground water both as a result of chemical reaction with the air and as a result of impurities introduced through the air stream;
2) adding water to the borehole for stabilization, surging, backwashing, flushing or any other purpose has an unpredictable effect on ground-water quality and at the very least causes dilution. Even if the water added to the borehole was originally pumped from the same formation, chemical alteration of the ground water in the formation can occur if the water is reinjected. Once water has been pumped to the surface, aeration can alter the original water quality;
3) developing the formation at the interface between the outer perimeter of an artificial filter pack and the inner perimeter of the borehole is extremely difficult. Any mudcake or natural clay deposited at this interface is very difficult to remove; incomplete removal can have unquantifiable short- and long-range impacts on the quality of the sampled ground water;
4) developing a well is relatively easy when the well intake is placed in a clean homogenous aquifer of relatively high permeability. It is very difficult to develop a representative well in an aquifer that is stratified, slowly permeable and fine-grained, particularly where there is substantial variation between the various stratified zones;
5) developing a larger-diameter monitoring well is easier than developing a smaller-diameter well. This is particularly true if the development is accomplished by overpumping or backwashing through the pump because suitable pumping capacity is not commonly available for small-diameter wells with deep static water levels. However, a smaller-diameter well is more "transparent" in the aquifer flow field and is therefore more likely to yield a representative sample;
6) collecting a non-turbid sample may not be possible because there are monitoring wells that cannot be sufficiently developed by any available technique. This may be the consequence of the existence of turbid water in the formation or the inability to design and construct a well that will yield water in satisfactory quantity without exceeding acceptable flow velocities in the natural formation;
7) applying many of the monitoring well-development techniques in small-diameter (2-inch) wells and using the design and construction techniques discussed in the literature are easiest in shallow monitoring situations with good hydraulic conductivity. These techniques may be impractical when applied to deeper or more difficult monitoring situations.
8) Adding clean water of known quality for flushing and/or jetting should be done only when no better options are available. A record must be kept of the quantities of water lost to the formation during the flushing/jetting operation and every attempt must be made to reestablish background levels in a manner similar to that described in Barcelona et al. (1985a) and/or the United States Environmental Protection Agency (1986); and
9) dealing objectively with the conditions and problems that exist for every installation is essential. The problems encountered at each site should be addressed and clearly presented in the final report. Chemical analyses must be included in the final report so that anyone evaluating these analyses is able to understand the limitations of the work.

Methods of Well Development

Monitoring well development is an attempt to remove fine particulate matter, commonly clay and silt, from the geologic formation near the well intake. If particulate matter is not removed, as water moves through the formation into the well, the water sampled will be turbid, and the viability of the water quality analyses will be impaired. When pumping during well development, the movement of water is unidirectional toward the well. Therefore, there is a tendency for the particles moving toward the well to "bridge" together or form blockages that restrict subsequent particulate movement. These blockages may prevent the complete development of the well capacity. This effect potentially impacts the quality of the water discharged. Development techniques should remove such bridges

Table 36. Summary of Development Methods for Monitoring Wells

Reference	Overpumping	Backwashing	Surge Block*	Bailer	Jetting	Airlift Pumping	Air Surging
Gass (1986)	Works best in clean coarse formations and some consolidated rock; problems of water disposal and bridging	Breaks up bridging, low cost & simple; preferentially develops	Can be effective; size made for≥2"-well; preferential development where screen >5'; surge inside screen		Consolidated and unconsolidated application; opens fractures, develops discrete zones; disadvantage is external water needed	Replaces air surging; filter air	Perhaps most widely used; can entrain air in formation so as to reduce permeability, affect water quality; avoid if possible.
United States Environmental Protection Agency (1986)	Effective development requires flow reversal or surges to avoid bridges	Indirectly indicates method applicable; formation water should be used	Applicable; formation water should be used; in low-yield formation, outside water source can be used if analyzed to evaluate impact	Applicable		Air should not be used	Air should not be used
Barcelona et al. ** (1983)	Productive wells; surging by alternating pumping and allowing to equilibrate; hard to create must be sufficient entrance velocities; often use with airlift		Productive wells; use care to avoid casing and screen damage	Productive wells; more common than surge blocks but not as effective			Effectiveness depends on geometry of device; air filtered; crew may be exposed to contaminated water; perturbed Eh in sand and gravel not persistent for more than a few weeks
Scalf et al. (1981)		Suitable; periodic removal of fines	Suitable; common with cable tool; not easily used on other rigs	Suitable; use sufficiently heavy bailer; advantage of removing fines; may be custom made for small diameters		Suitable	Suitable; avoid injecting air into intake; chemical interference; air pipe never inside screen
National Council of the Paper Industry for Air and Stream Improvement (1981)	Applicable drawback of flow in one direction; smaller wells hard to pump if water level below suction		Applicable; caution against collapse of intake or plugging screen with clay		Methods introducing foreign materials should be avoided (i.e., compressed air or water jets)		

Table 36. (Continued)

Reference	Overpumping	Backwashing	Surge Block*	Bailer	Jetting	Airlift Pumping	Air Surging
Everett (1980)	Development operation must cause flow reversal to avoid bridging; can alternate pump off and on		Suitable; periodic bailing to remove fines		High velocity jets of water generally most effective; discret zones of development		
Keely and Boateng (1987 a and b)	Probably most desirable when surged; second series of evacuation/ recovery cycles is recommended after resting the well for 24 hours; settlement and loosening of fines ocurs after the first development attempt; not as vigorous as backwashing	Vigorous surging action may not be desirable due to disturbance of gravel pack	Method quite effective in loosening fines but may be inadvisable in that filter pack and fluids may be displaced to degree that damages value as a filtering media		Popular but less desirable; method different from water wells; water displaced by short downward bursts of high-pressure injection; important not to jet air or water across screen because fines driven into screen cause irreversible blockage; may substantially displace native fluids	Air can become entrained behind screen and reduce permeability	

* Schalla and Landick (1986) report on special 2"- valved block

** For low hydraulic conductivity wells, flush water up annulus prior to sealing; afterwards pump

and encourage the movement of particulates into the well. These particulates can then be removed from the well by bailer or pump and, in most cases, the water produced will subsequently be clear and non-turbid.

One of the major considerations in monitoring well development is the expense. In hard-to-develop formations, it is not unusual for the development process to take several days before an acceptable water quality can be attained. Because development procedures usually involve a drilling rig, crew, support staff and a supervising geologist, the total cost of the crew in the field often ranges in cost from $100 to $200 per hour. Thus, the cost of development can be the most expensive portion of the installation of a monitoring-well network. When this hourly cost is compared to an often imperceptible rate of progress, there is a tendency to prematurely say either, "that is good enough" or "it can't be done."

In most instances, monitoring wells installed in consolidated formations can be developed without great difficulty. Monitoring wells also can usually be developed rapidly and without great difficulty in sand and gravel deposits. However, many installations are made in thin, silty and/or clayey zones. It is not uncommon for these zones to be difficult to develop sufficiently for adequate samples to be collected.

Where the borehole is sufficiently stable, due to installation in sound rock or stable unconsolidated materials, and where the addition of fluids during completion and development is permissible, it is a good practice to precondition the borehole by flushing with clean water prior to filter pack installation. When water is added to the well, the quality of the water must be analyzed so that comparisons can be made with subsequent water-quality data. Flushing of monitoring wells is appropriate for wells drilled by any method and aids in the removal of mud cake (mud rotary) and other finely-ground debris (air rotary, cable tool, auger) from the borehole wall. This process opens clogged fractures and cleans thin stratigraphic zones that might otherwise be non-productive. Flushing can be accomplished by isolating individual open zones in the borehole or by exposing the entire zone. If the entire zone is exposed, cross connection of all zones can occur.

Where it is not permissible to add fluids during completion and development, and the borehole is stable, mechanically scraping or scratching the borehole wall with a scraper or wire brush, can assist in removing particulates from the borehole wall. Dislodged particulates can be pumped or bailed from the borehole prior to filter pack, casing and well intake installation.

Where the addition of fluid is permissible, the use of high-pressure jetting can be considered for screened intake development in special applications. If jetting is used, the process should usually be performed in such a manner that loosened particulates are removed (e.g., bailing, pumping, flushing) either simultaneously or alternately with the jetting. The disadvantages of using jetting even in "ideal conditions" are fourfold: 1) the water used in jetting is agitated, pumped, pressurized and discharged into the formation; 2) the fine (e.g., 10-slot, 20-slot) slotted screens of most monitoring well intakes do not permit effective jetting, and development of the material outside the screen may be negligible or possibly detrimental; 3) there is minimal development of the interface between the filter pack and the wall of the borehole (Table 36) and 4) water that is injected forcibly replaces natural formation fluids. These are serious limitations on the usefulness of jetting as a development procedure.

Air development forcibly introduces air into contact with formation fluids, initiating the potential for uncontrolled chemical reactions. When air is introduced into permeable formations, there is a serious potential for air entrainment within the formation. Air entrainment not only presents potential quality problems, but also can interfere with flow into the monitoring well. These factors limit the use of air surging for development of monitoring wells.

After due consideration of the available procedures for well development, it becomes evident that the four most suitable methods for monitoring well development are: 1) bailing, 2) surge block surging, 3) pumping/overpumping/backwashing and 4) combinations of these three methods.

Bailing

In relatively clean, permeable formations where water flows freely into the borehole, bailing is an effective development technique. The bailer is allowed to fall freely through the borehole until it strikes the surface of the water. The contact of the bailer produces a strong outward surge of water that is forced from the borehole through the well intake and into the formation. This tends to break up bridging that has developed within the formation. As the bailer fills and is rapidly withdrawn, the drawdown created in the borehole causes the particulate matter outside the well intake to flow through the well intake and into the well. Subsequent bailing removes the particulate matter from the well. To enhance the removal of sand and other particulate matter from the well, the bailer can be agitated by rapid short strokes near the bottom of the well. This agitation makes it possible to bail the particulates from the well by suspending or slurrying the particulate matter. Bailing should be continued until the water is free from suspended particulate matter. If the well is rapidly and repeatedly bailed and the formation is not sufficiently conductive, the borehole will be dewatered. When this occurs, the borehole must be allowed to refill before bailing is resumed. Care must be taken that the rapid removal of the bailer does not cause the external pressure on the well casing to exceed the strength of the casing and/or well intake thereby causing collapse of the casing and/or well intake.

Bailing can be conducted by hand on shallow wells, although it is difficult to continue actively bailing for more than about an hour. Most drill rigs are equipped with an extra line that can be used for the bailing operation. The most effective operation is where the bail line permits a free fall in the downward mode and a relatively quick retrieval in the upward mode. This combination maximizes the surging action of the bailer. The hydraulic-powered lines on many rigs used in monitoring-well installation operate too slowly for effective surging. Bailing is an effective development tool because it provides the same effects as both pumping and surging with a surge block. The most effective equipment for bailing operations is generally available on cable tool rigs.

There are a variety of dart valve, flat bottom and sand pump bailers available for the development of larger-diameter wells. These bailers are typically fabricated from steel and are operated by using a specially designated line on the rig. For most monitoring-well applications, small-diameter PVC or fluoropolymer bailers are readily available. When commercial bailers are not available, bailers can be fabricated from readily available materials. Bailers of appropriate diameter, length, material and weight should be used to avoid potential breakage of the well casing or screen. Figures 74a and 74b show a schematic representation of typical commercially available small-diameter bailers.

Surge Block

Surge blocks, such as are shown in Figures 75 and 76, can be used effectively to destroy bridging and to create the agitation that is necessary to develop a well. A surge block is used alternately with either a bailer or pump so that material that has been agitated and loosened by the surging action is removed. The cycle of surging-pumping/bailing is repeated until satisfactory development has been attained.

During the development process, the surge block can be operated either as an integral part of the drill rods or on a wireline. In either event, the surge block assembly must be of sufficient weight to free-fall through the water in the borehole and create a vigorous outward surge. The equipment that lifts or extracts the surge block after the downward plunge must be strong enough to pull the surge block upward relatively rapidly. The surge block by design permits some of the fluid to bypass on the downward stroke, either around the perimeter of the surge block or through bypass valves.

The surge block is lowered to the top of the well intake and then operated in a pumping action with a typical stroke of approximately 3 feet. The surging is usually initiated at the top of the well intake and gradually is worked downward through the screened interval. The surge block is removed at regular intervals and the fine material that has been loosened is removed by bailing and/or pumping. Surging begins at the top of the well intake so that sand or silt loosened by the initial surging action cannot cascade down on top of the surge block and prevent removal of the surge block from the well. Surging is initially gentle, and the energy of the action is gradually increased during the development process. The vigor of the surging action is controlled by the speed, length and stroke of the fall and speed of retraction of the surge block. By controlling these rates, the surging activity can range from very rigorous to very gentle.

Surging within the well intake can result in serious difficulties. Vigorous surging in a well that is designed such that excessive sand can be produced, can result in sand-locking the surge block. This should not occur in a properly designed monitoring well, nor should it occur if the surge block of appropriate diameter is properly used. As in the case of bailer surging, if excessive force is used, it is possible to cause the collapse of the well intake and/or the casing.

An alternative to surging within the well intake is to perform the surging within the casing above the well intake. This has the advantage of minimizing the risk of sand locking. However, it also reduces the effectiveness of the surging action. In permeable material, the procedure of surging above the well intake is effective only for well intakes with lengths of 5 feet or less.

If the well is properly designed, and if: 1) the surge block is initially operated with short, gentle strokes above the well intake, 2) sand is removed periodically by alternating sand removal with surging, 3) the energy of surging is gradually increased at each depth of surging until no more sand is produced from surging at that depth, and 4) the depth of surging is incrementally increased from top to bottom of the well intake, then surging can be conducted effectively and safely.

Where there is sufficient annular space available within the casing, which is seldom the case with monitoring wells, it is effective to install a low-capacity pump above the surge block. By discharging from the well concurrent with surging, a gradient is maintained toward the well. This set-up assists in developing the adjacent aquifer by maintaining the movement of particulate material toward the well.

Surging is usually most effective when performed by cable tool-type machines. The hydraulic hoisting equipment that is normally available on most other types of drilling equipment does not operate with sufficient speed to provide high-energy surging. Where properly used, the surge block in combination with bailing or pumping may be the most effective form of mechanical development.

Pumping/Overpumping/ Backwashing

The easiest, least-expensive and most commonly employed technique of monitoring-well development is some form of pumping. By installing a pump in the well and starting the pump, ground-water flow is induced toward the well. Fine-particulate material that moves into the well is discharged by the pump. In overpumping, the pump is operated at a capacity that substantially exceeds the ability of the formation to deliver water. This flow velocity into the well usually exceeds the flow velocity that will subsequently be induced during the sampling process. This increased velocity causes rapid and effective migration of particulates toward the pumping well and enhances the development process. Proper design is needed to avoid well collapse, especially in deep wells. Both pumping and overpumping are easily used in the development of a well.

Where there is no backflow-prevention valve installed, the pump can be alternately started and stopped. This starting and stopping allows the column of water that is initially picked up by the pump to be alternately dropped and raised up in a surging action. Each time the water column falls back into the well, an outward surge of water flows into the formation. This surge tends to loosen the bridging of the fine particles so that the upward motion of the column of water can move the particles into and out of the well. In this manner, the well can be pumped, overpumped and back-flushed alternately until such time as satisfactory development has been attained.

While the preceding procedures can effectively develop a well, and have been used for many years in the development of production wells, pumping equipment suitable to perform these operations may not be available that will fit into some small-diameter monitoring wells. To be effective as a development tool, pumps must have a pumping capability that ranges from

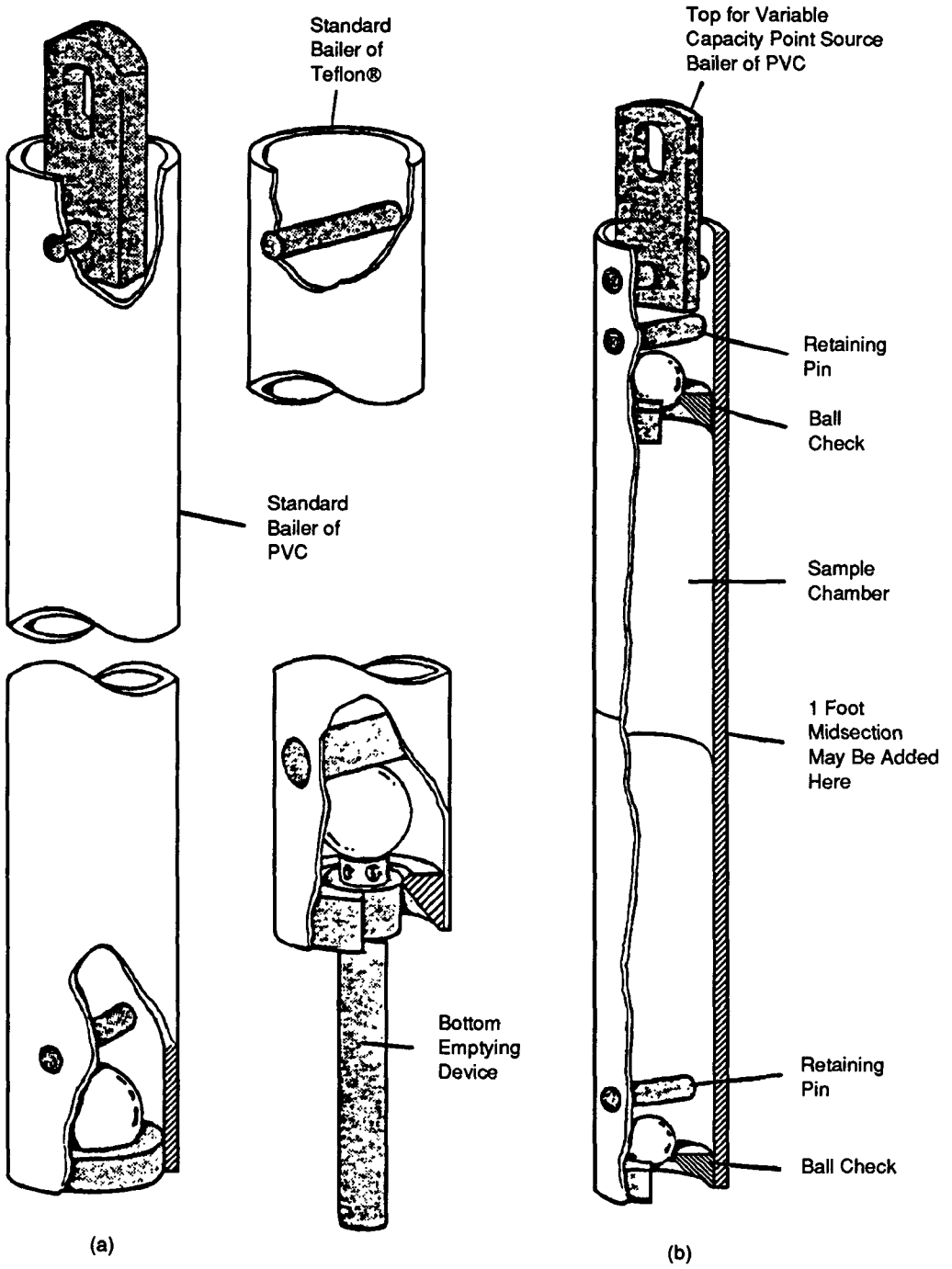

Figure 74. Diagrams of typical bailers used in monitoring well development: a) standard type and b) "point source" bailer (Timco Manufacturing Company, Inc., 1982).

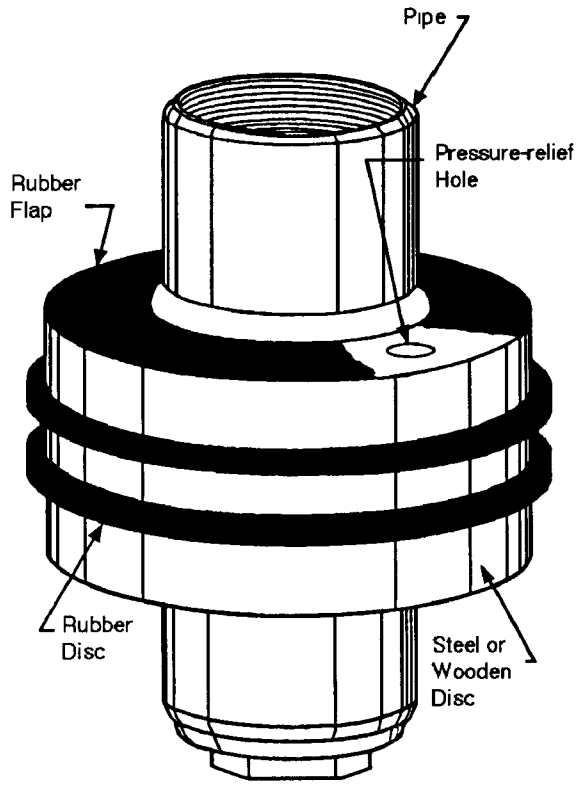

Figure 75. Diagram of a typical surge block (Driscoll, 1986).

very low to very high or be capable of being controlled by valving. The sampling pumps that are presently designed to fit into small-diameter boreholes commonly do not provide the upper range of capacities that often are needed for this type of development. For shallow wells with water levels less than 25 feet deep, a suction-lift centrifugal pump can be used for development in the manner prescribed. The maximum practical suction lift attainable by this method is approximately 25 feet. In practice, bailing or bailing and surging is combined with pumping for the most-efficient well development. The bailing or surging procedures are used to loosen bridges and move material toward the well. A low-capacity sampling pump or bailer is then used to remove turbid water from the well until the quality is satisfactory. This procedure is actually less than completely satisfactory, but is the best-available technology with the equipment that is currently available.

Air lifting, without exposing the formations being developed directly to air, can be accomplished by properly implemented pumping. To do this, the double pipe method of air lifting is preferred. The bottom of the air lift should be lowered to within no more than 10 feet of the top of the well intake, and in no event should the air lift be used within the well intake. If the air lift is used to surge the well, by alternating the air on and off, there will be mixing of aerated water with the water in the well. Therefore, if the well is to be pumped by air lifting, the action should be one of continuous, regulated discharge. This can be effectively accomplished only in relatively permeable aquifers.

Where monitoring well installations are to be made in formations that have low hydraulic conductivity, none of the preceding well-development methods will be found to be completely satisfactory. Barcelona et al. (1985a) recommend a procedure that is applicable in this situation: "In this type of geologic setting, clean water should be circulated down the well casing, out through the well intake and gravel pack, and up the open borehole prior to placement of the grout or seal in the annulus. Relatively high water velocities can be maintained, and the mudcake from the borehole wall will be broken down effectively and removed. Flow rates should be controlled to prevent floating the gravel pack out of the borehole. Because of the relatively low hydraulic conductivity of geologic materials outside the well, a negligible amount of water will penetrate the formation being monitored. However, immediately following the procedure, the well sealant should be installed and the well pumped to remove as much of the water used in the development process as possible."

All of the techniques described in this section are designed to remove the effects of drilling from the monitored zone and, insofar as possible, to restore the formations penetrated to indigenous conditions. To this end, proposed development techniques, where possible, avoid the use of introduced fluids, including air, into the monitored zone during the development process. This not only minimizes adverse impacts on the quality of water samples, but also restricts development options that would otherwise be available.

References

Barcelona, M.J., J.P. Gibb, J.A. Helfrich and E.E. Garske, 1985a. Practical guide for ground-water sampling; Illinois State Water Survey, SWS Contract Report 374, Champaign, Illinois, 93 pp.

Barcelona, M.J., J.P. Gibb and R. Miller, 1983. A guide to the selection of materials for monitoring well construction and ground-water sampling; Illinois State Water Survey, SWS Contract Report 327, Champaign, Illinois, 78 pp.

Driscoll, Fletcher G., 1986. Ground water and wells; Johnson Division, St. Paul, Minnesota, 1089 pp.

Everett, Lorne G., 1980. Ground-water monitoring; General Electric Company technology marketing operation, Schenectady, New York, 440 pp.

Gass, Tyler E., 1986. Monitoring well development; Water Well Journal, vol. 40, no. 1, pp. 52-55.

Keely, Joseph F. and Kwasi Boateng, 1987a. Monitoring well installation, purging and sampling techniques part 1: conceptualizations; Ground Water, vol. 25, no. 3, pp. 300-313.

Keely, Joseph F. and Kwasi Boateng, 1987b. Monitoring well installation, purging, and sampling techniques part 2: case histories; Ground Water, vol. 25, no. 4, pp. 427-439.

National Council of the Paper Industry for Air and Stream Improvement, 1981. Ground-water quality monitoring well construction and placement; Stream Improvement Technical Bulletin Number 342, New York, New York, 39 pp.

Scalf, M.R., J.F. McNabb, W.J. Dunlap, R.L. Cosby and J. Fryberger, 1981. Manual of ground-water sampling

procedures; National Water Well Association, 93 pp.
Schalla, Ronald and Robert W. Landick, 1986. A new valved and air-vented surge plunger for developing small-diameter monitor wells; Ground Water Monitoring Review, vol. 6, no. 2, pp. 77-80.
Timco Manufacturing Company, Inc., 1982. Geotechnical Products; product literature, Prairie Du Sac, Wisconsin, 24 pp.
United States Environmental Protection Agency, 1986. RCRA ground-water monitoring technical enforcement guidance document; Office of Waste Programs Enforcement, Office of Solid Waste and Emergency Response," OSWER-9950.1, United States Environmental Protection Agency, 317 pp.

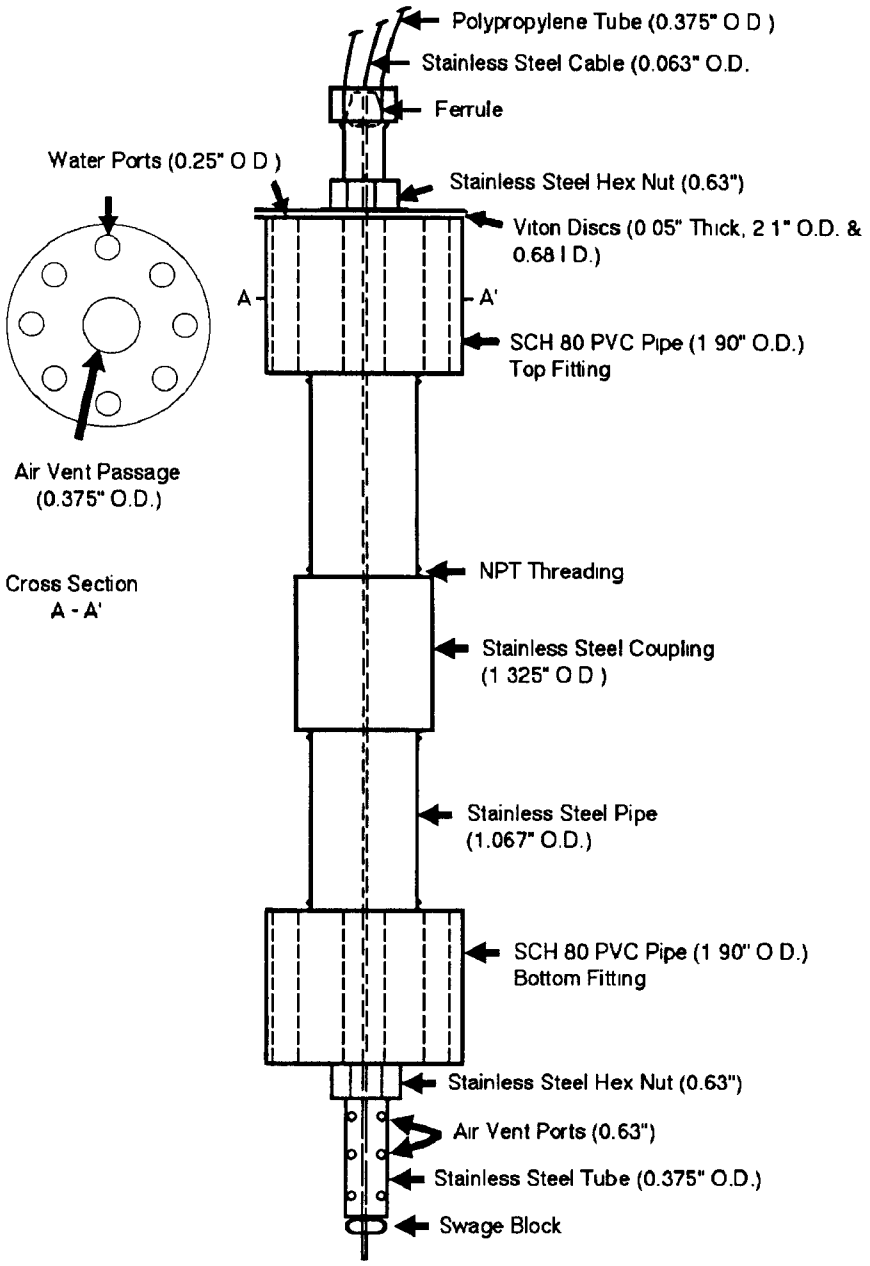

Figure 76. Diagram of a specialized monitoring well surge block (Schalla and Landick, 1986).

Section 8
Monitoring Well Network Management Considerations

Well Documentation

Records are an integral part of any monitoring system. Comprehensive records should be kept that document data collection at a specific site. These data include boring records, geophysical data, aquifer analysis data, ground-water sampling results and abandonment documentation. Armed with as much data as possible for the site, an effective management strategy for the monitoring well network can be instituted.

Excellent records of monitoring wells must be kept for any management strategy to be effective. Documentation of monitoring well construction and testing must frequently be provided as part of a regulatory program. Many states require drillers to file a well log to document well installation and location. Currently, some states have adopted or are adopting regulations with unique reporting requirements specifically for monitoring wells. At the state and federal level, guidance documents have been developed that address reporting requirements. Tables 37, 38 and 39 illustrate some of the items that various states have implemented to address monitoring well recordkeeping. Table 40 shows the recommendations of the United States Environmental Protection Agency (1986). An additional discussion on field documentation can be found in the section entitled "Recordkeeping. "

The most critical factor in evaluating or reviewing data from a monitoring well is location. If a monitoring well cannot be physically located in the field and/or on a map in relationship to other wells, only limited interpretation of the data is possible. All monitoring wells should be properly located and referenced to a datum. The degree of accuracy for vertical and horizontal control for monitoring well location should be established and held constant for all monitoring wells. In many cases, a licensed surveyor should be contracted to perform the survey of the wells. With few exceptions, vertical elevations should be referenced to mean sea level and be accurate to 0.01 foot (Brownlee, 1985). Because elevations are surveyed during various stages of well/boring installation, careful records must be kept as to where the elevation is established. For example, if ground elevation is determined during the drilling process, no permanent elevation point usually can be established because the ground is disturbed during the drilling process. A temporary pin can be established close to the well location for use in later more accurate measurements, but the completed well must be resurveyed to maintain the desired accuracy of elevation. Each completed well should have a standard surveyed reference point. Because the top of the casing is not always level, frequently the highest point on the casing is used. Brownlee (1985) suggests that the standard reference point should be consistent such that the north (or other) side of all monitoring wells is the referenced point. Regardless of what point is chosen, the surveyor should be advised before the survey is conducted and the reference point clearly marked at each well. If paint is used to mark the casing, the paint must not be allowed on the inside of the casing. If spray paint is used, the aerosols can coat the inside of the casing and may cause spurious water-quality results in subsequent samples. An alternative way to mark the casing is to notch the casing so that a permanent reference point is designated. The United States Environmental Protection Agency (1986) recommends that reference marks be placed on both the casing and grout apron.

Well locations should clearly be marked in the field. Each well should have a unique number that is clearly visible on the well or protective casing. To ensure good documentation, the well number may be descriptive of the method used to install the well. For example, a well designated as C-1 could represent the first cored hole, or HS-3 could be a hollow-stem auger hole. If multilevel sampling tubes are being used, each tube should be clearly marked with the appropriate depth interval.

Well locations should be clearly marked on a map. The map should also include roads, buildings, other wells, property boundaries and other reference points. In general, maps illustrating comparable items should be the same scale. In addition to the unique monitoring well number, general well designations may be desirable to include on the map. The Wisconsin Department of Natural Resources (1985) suggests that PIEZ (piezometer), OW (observation well), PVT (private well), LYS (lysimeter) and OTHER be used to clarify the function of the wells.

Files should be kept on each monitoring well so that any suspected problems with the monitoring well can be evaluated based on previous well performance. The accuracy and completeness of the records will influence the ability of the reviewer to make decisions based on historical data.

Well Maintenance and Rehabilitation

The purpose of maintaining a monitoring well is to extend the life of the well and to provide representative levels and samples of the ground water surrounding the well. Maintenance includes proper documentation of factors that can be used as benchmarks for comparison of data at a later point. A scheduled maintenance program should be developed before sample quality is questioned. This section is designed to assist the user in setting up a comprehensive maintenance schedule for a monitoring system.

Documenting Monitoring Well Performance

A monitoring well network should be periodically evaluated to determine that the wells are functioning properly. Once complete construction and "as-built" information is on file for

Table 37. Comprehensive Monitoring Well Documentation (After Wisconsin Department of Natural Resources, 1985)

Well Design:
- Length, schedule and diameter of casing
- Joint type (threaded, flush or solvent welded)
- Length, schedule and diameter of screen
- Percentage of open area in screen
- Slot size of screen
- Distance the filter pack extends above the screen
- Elevations of the top of well casing, bottom and top of protective casing, ground surface, bottom of borehole, bottom of well screen, and top and bottom of seal(s)
- Well location by coordinates or grid systems (example township and range)
- Well location on plan sheet showing the coordinate system, scale, a north arrow and a key

Materials:
- Casing and screen
- Filter pack (including grain size analysis)
- Seal and physical form
- Slurry or grout mix (percent cement, percent bentonite powder, percent water)

Installation:
- Drilling method
- Drilling fluid (if applicable)
- Source of water (if applicable) and analysis of water
- Time period between the addition of backfill and construction of well protection

Development:
- Date, time, elevation of water level prior to and after development
- Method used for development
- Time spent developing a well
- Volume of water removed
- Volume of water added (if applicable), source of water added, chemical analyses of water added
- Clarity of water before and after development
- Amount of sediment present at the bottom of the well
- pH, specific conductance and temperature readings

Soils Information:
- Soil sample test results
- Driller's observation or photocopied drillers log

Miscellaneous:
- Water levels and dates
- Well yield
- Any changes made in well construction, casing elevation, etc.

Table 38. Additional Monitoring Well Documentation (After Nebraska Department of Environmental Control, 1984)

- Well identification number
- Formation samples (depth and method of collection)
- Water samples (depth, method of collection, and results)
- Filter pack (depth, thickness, grain size analysis, placement method, supplier)
- Date of all work
- Name, address of consultant, drilling company and stratigraphic log preparer(s)
- Description and results of pump or stabilization test if performed
- Methods used to decontaminate drilling equipment and well construction material

Table 39. As-Built Construction Diagram Information (After Connecticut Environmental Protection Agency, 1983)

- Top of ground surface
- Protective grouting and grading at ground surface
- Well casing length and depth
- Screen length and depth
- Location and extent of gravel pack
- Location and extent of bentonite seal
- Water table
- Earth materials stratigraphy throughout boring
- For rock wells, show details of bedrock seal
- For rock wells, indicate depths of water-bearing fractures, faults or fissures and approximate yield

each well, the well should be periodically re-evaluated to check for potential problems. The following checks can be used as a "first alert" for potential problems:

1) The depth of the well should be recorded every time a water sample is collected or a water-level reading taken. These depths should be reviewed at least annually to document whether or not the well is filling with sediment;
2) If turbid samples are collected from a well, redevelopment of the existing well should be considered or a new well should be installed if necessary (Barcelona et al., 1985a);
3) Hydraulic conductivity tests should be performed every 5 years or when significant sediment has accumulated;
4) Slug or pump tests should be performed every 5 years. Redevelopment is necessary if the tests

Table 40. Field Boring Log Information (United States Environmental Protection Agency, 1986)

General:
- Project name
- Hole name/number*
- Date started and finished*
- Geologist's name*
- Driller's name*
- Sheet number
- Hole location; map and elevation*
- Rig type
- Bit size/auger size*
- Petrologic lithologic classification scheme used (Wentworth, unified soil classification system)

Information Columns:
- Depth*
- Sample location/number*
- Blow counts and advance rate
- Percent sample recovery*
- Narrative description*
- Depth to saturation*

Narrative Description:
- Geologic observations:
- soil/rock type*
- color and stain*
- gross petrology*
- friability
- moisture content*
- degree of weathering*
- presence of carbonate*
- fractures*
- solution cavities*
- bedding*
- discontinuities*- e.g., foliation
- water-bearing zones*
- formational strike and dip*
- fossils
- dapositional structures*
- organic content*
- odor*
- suspected contaminant*

- **Drilling Observations:**
- loss of circulation
- advance rates*
- rig chatter
- water levels*
- amount of air used, air pressure
- drilling difficulties*
- changes in drilling method or equipment*
- readings from detective equipment, if any*
- amount of water yield or loss during drilling at different depths*
- amounts and types of any liquids used*
- running sands*
- caving/hole stability*

- **Other Remarks:**
- equipment failures
- possible contamination*
- deviations from drilling plan*
- weather

* Indicates items that the owner/operator should record at a minimum.

show that the performance of the well is deteriorating;

5) Piezometric surface maps should be plotted and reviewed at least annually; and
6) High and low water-level data for each well should be examined at least every 2 years to assure that well locations (horizontally and vertically) remain acceptable. If the water level falls below the top of the well intake, the quality of the water samples collected can be altered.

Where serious problems are indicated with a well(s), geophysical logs may be helpful in diagnosing maintenance needs. Caliper logs provide information on diameter that may be used to evaluate physical changes in the borehole or casing. Gamma logs can be used to evaluate lithologic changes and can be applied to ascertain whether or not well intakes are properly placed. Spontaneous potential logs can locate zones of low permeability where siltation may originate. Resistivity logs identify permeable and/or porous zones to identify formation boundaries. Television and photographic surveys can pinpoint casing problems and well intake failure and/or blockage. When used in combination, geophysical logs may save time and money in identifying problem areas. An additional discussion of the applicability and limitations of geophysical logging tools can be found in the section entitled "Borehole Geophysical Tools and Downhole Cameras."

Factors Contributing to Well Maintenance Needs

The maintenance requirements of a well are influenced by the design of the well and the characteristics of the monitored zones. Water quality, transmissivity, permeability, storage capacity, boundary conditions, stratification, sorting and fracturing all can influence the need for and method(s) of well maintenance. Table 41 lists major aquifer types by groundwater regions and indicates the most prevalent problems with operation of the wells in this type of rock or unconsolidated deposit. Problems with monitoring wells are typically caused by poor well design, improper installation, incomplete development, borehole instability and chemical, physical and/or biological incrustation. A brief description of the major factors leading to well maintenance are discussed below.

Design —

A well is improperly designed if hydrogeologic conditions, water quality or well intake design are not compatible with the purpose and use of the monitoring well. For example, if water is withdrawn during the sampling process and the well screen is plugged, the hydrostatic pressure on the outside of the casing may be great enough to cause collapse of the well intake if the strength of the material was not sufficient for the application. This is particularly true if the well intake material was chemically incompatible with the ground water and was weakened due to chemical reactions. Another example is where the operational life of the monitoring well exceeds the design life.

If a well was installed for short-term water level measurements and the well ultimately is used for long-term sample collection, problems with material compatability may occur. Additionally, if the well intake openings are improperly sized and/or if the filter pack is incorrectly designed or installed, siltation and turbid water samples can result.

Installation —

If productive zones are not accurately identified during the well drilling process, well intakes can be improperly located or zones can be improperly sealed. Incorrect installation procedures and/or difficulties may also cause mislocation of well intakes and/or seals. Improperly connected or corroded casing can separate at joints or collapse and cause interaquifer contamination. Improperly mixed grout can form inadequate seals. If casing centralizers are not used, grout distribution may be inadequate. If the casing is corroded or the bentonite seal not properly placed, grout may contaminate the water samples. Drilling mud filtrate may not have been completely removed during the development process. The surface seal could have been deteriorated or could have been constructed improperly, and surface water may infiltrate along the casing/borehole annulus. The intake filter pack must be properly installed.

Development —

Drilling mud, natural fines or chemicals used during drilling must be removed during the development process. If these constituents are not removed, water-sample quality may be compromised. Chemicals can also cause screen corrosion, shale hydration or plugging of the well intake. In general, the use of chemicals is not recommended and any water added during the development process must be thoroughly tested.

Borehole stability —

Unstable boreholes contribute to casing failure, grout failure or screen failure. Borehole instability can be caused by factors such as improper well intake placement, excessive entrance velocity or shale hydration.

Incrustation —

There are four types of incrustation that reduce well production: 1) chemical, 2) physical, 3) biological or 4) a combination of the other three processes. Chemical incrustation may be caused by carbonates, oxides, hydroxides or sulfate depositions on or within the intake. Physical plugging of the wells is caused by sediments plugging the intake and surrounding formation. Biological incrustation is caused by bacteria growing in the formation adjacent to the well intake or within the well. The bacterial growth rate depends on the quantities of nutrients available. The velocity at which the nutrients travel partially controls nutrient availability. Examples of common bacteria found in reducing conditions in wells include sulphur-splitting and hydrocarbon-forming bacteria; iron-fixing bacteria occur in oxidizing conditions. Some biological contamination may originate from the ground surface and be introduced into the borehole during drilling. Nutrients for the organisms may also be provided by some drilling fluids, additives or detergents.

Incrustation problems are most commonly caused by a combination of chemical-physical, physical-biological or a combination of chemical-physical-biological incrustations. Particulates moving through the well intake may be cemented by chemical/biological masses.

Downhole Maintenance

Many wells accumulate sediment at the bottom. Sand and silt may penetrate the screen if the well is improperly developed or screen openings improperly sized. Rocks dropped by rock and bong technologists (Stewart, 1970), insects or waterlogged twigs can also enter the well through casing from the surface. Sediment can also be formed by precipitates caused by constituents within the water reacting with oxygen at the water surface (National Council of the Paper Industry for Air and Stream Improvement, 1982).

If sediment build-up occurs, the sediment should be removed. A sediment layer at the bottom of the well encourages bacterial activity that can influence sample quality. In wells that are less than 25 feet deep, sediment can be removed by a centrifugal pump, and an intake hose can be used to "vacuum" the bottom of a well. In wells deeper than 25 feet, a hose with a foot valve can be used as a vacuum device to remove sediment. In some situations, bailers can also be used to remove sediment. Sediment should be removed before purging and sampling to eliminate sample turbidity and associated questions about sample validity.

More traditional maintenance/rehabilitation techniques used to restore yields of water supply wells include chemical and mechanical methods that are often combined for optimum effectiveness. Three categories of chemicals are used in traditional well rehabilitation: 1) acids, 2) biocides and 3) surfactants. The main objectives of chemical treatment are: 1) to dissolve the incrustants deposited on the well intake or in the surrounding formation, 2) to kill the bacteria in the well or surrounding formation and 3) to disperse clay and fine materials to allow removal. Table 42 lists typical chemicals and applications in the water supply industry. Chemicals have very limited application in the rehabilitation of monitoring wells because the chemicals cause severe changes in the environment of the wells. These changes may last for a long time or may be permanent. Before redevelopment with chemicals is considered, the negative aspects of chemical alteration in an existing well with a long period of record must be evaluated against negative aspects of replacing the old well with a new well that may have new problems and no history. If chemical rehabilitation is attempted, parameters such as Eh, pH, temperature and conductivity should be measured. These measurements can serve as values for comparison of water quality before and after well maintenance.

Mechanical rehabilitation includes: overpumping, surging, jetting and air development. These processes are the same as those used in well development and are described in greater detail in the section entitled "Methods of Well Development." Development with air is not recommended because the introduction of air can change the chemical environment in the well. Any type of rehabilitation for incrustation can be supplemented by use of a wire brush or mechanical scraper with bailing or pumping to remove the loose particles from the well.

Exterior Well Maintenance

Maintenance must also be performed on the exposed parts of the well. Any well casing, well cap, protective casing,

Table 41. Regional Well Maintenance Problems (Gass et al., 1980)

Ground Water Regions	Most Prevalent Aquifer Types	*Most Prevalent Well Problems
1. Western Mountain Ranges	Alluvial	Silt, clay, sand intrusion, iron; scale deposition; biological fouling.
	Sandstone	Fissure plugging; casing failure; sand production.
	Limestone	Fissure plugging by clay and silt; mineralization of fissures.
2. Alluvial Basins	Alluvial	Clay, silt, sand intrusion; scale deposition; iron; biological fouling; limited recharge; casing failure.
3. Columbia Lava Plateau	Basaltic lavas	Fissure and vesicle plugging by clay and silt; some scale deposition.
	Alluvial	Clay, silt, sand intrusion; iron; manganese; biological fouling.
4. Colorado Plateau, Wyoming Basin	Interbedded sandstone and shale	Low initial yields; plugging of aquifer during construction by drilling muds and fines (clay and silt) natural to formations; fissure plugging; limited recharge; casing failure.
5. High Plains	Alluvial	Clay, silt, sand intrusion; scale deposition; iron; biological fouling; limited recharge.
	Interbedded sandstone, limestone, shale	Low initial yield; plugging of voids and fissures; poor development and construction; limited recharge.
6. Unglaciated Central Region	Alluvial	Clay, silt, sand intrusion; scale deposition; iron; biological fouling.
	Sandstone	Fissure plugging by clay and silt; casing failure; corrosion; salt water intrusion; sand production.
	Limestone	Fissure plugging by clay, silt, carbonate scale; salt water intrusion.
7. Glaciated Central Region	Alluvial	Clay, silt, sand intrusion; scale deposition; iron; biological fouling.
	Sandstone	Fissure plugging; sand intrusion; casing failure.
8. Unglaciated Appalachians	Metamorphic	Low initial yield; fissure plugging by silt and clay; mineraliztion of fissures.
	Limestone	Predominantly cavernous production; fissure plugging by clay and silt; mineralization of fissures.
	Alluvial	Clay, silt, fine sand intrusion; iron; scale; biological fouling.
9. Glaciated Appalachians	Alluvial	Clay, silt, sand intrusion; scale deposition; biological fouling; iron.
	Consolidated sedimentary	Fissure plugging; mineralization; low to medium initial yield.
10. Atlantic and Gulf Coast Plain	Alluvial and semiconsolidated	Clay, silt, sand intrusion; mineralization of screens; biological fouling.
	Consolidated sedimentary	Mechanical and chemical fissure plugging; biological fouling; incrustation of well intake structure.

* Excluding pumps and declining water table.

Table 42. Chemicals Used for Well Maintenance (Gass et al., 1980)

	Chemical Name	Formula	Application	Concentration
Acids and biocides	Hydrochloric acid	HCl	Carbonate scale, oxides, hydroxides	15%; 2-3 times zone volume
	Sulfamic acid	NH_2SO_3H	Carbonate scale, oxides, hydroxides	15%; 2-3 times zone volume
	Hydroxyacetic acid	$C_2H_4O_3$	Biocide, chelating agent, weak scale removal agent	
	Chlorine	Cl_2	Biocide, sterilization, very weak acid	50-500 ppm
Inhibitors	Diethyithiourea	$(C_2H_5)NCSN\ (C_2H_5)$	Metal protection	0.2%
	Dow A-73		Metal protection	0.01%
	Hydrated ferric sulfate	$Fe_2(SO_4)_3 \cdot 2\text{-}3H_2O$	For stainless steel	1%
	Aldec 97		With sulfamic acid	2%
	Polyrad 110A		Metal protection	.375%
Chelating agents	Citric acid	$C_6H_8O_7$	Keeps metal ions in solution	
	Phosphoric acid	H_3PO_4	Keeps metal ions in solution	
	Rochelle salt	$NaOOC\ (CHOH)_2\ COOK$	Keeps metal ions in solution	
	Hydroxyacetic acid	$C_2H_4O_3$	Keeps metal ions in solution	
Wetting agents	Plutonic F-68		Renders a surface non-repellent to a wetting liquid	
	Plutonic L-62		Renders a surface non-repellent to a wetting liquid	
Surfactants	Dow F-33		Lowers surface tension of water thereby increasing its cleaning power	
	Sodium Tripolyphosphate			
	Sodium Hexametaphosphate			

sampling tubing, bumper guard and/or surface seal should be periodically inspected to ensure that monitoring well sample quality will not be adversely affected. Suggested routine inspection and maintenance options should be considered:

1) Exposed well casing should be inspected. Well casing should be of good structural integrity and free of any cracks or corrosion;
2) The well cap should be removed to inspect for spider webs, molds, fungi or other evidence of problems that may affect the representativeness of water samples. If no organisms and/or associated evidence are found, the upper portion of the casing should be cleaned with a long-handled brush or other similar tool. The cleaning should be scheduled after sample collection, and the well should be completely purged after cleaning (National Council of the Paper Industry for Air and Stream Improvement, 1982);
3) When metal casing is used as protective casing and a threaded cap is used, the casing should be inspected for corrosion along the threads. Corrosion can be reduced by lightly lubricating or applying teflon tape to the threads to prevent seizing. Corrosion of the casing can be reduced by painting. If lubricants and/or paint are used, the lubricants and/or paint should be prevented from entering the well;
4) Where multilevel sampling tubes are used, the tubes should be checked for blockages and labeling so that samples are collected from the intended zones;
5) Where exterior bumper guards are used, the bumper guards should be inspected for mechanical soundness and periodically painted to retain visibility; and
6) Surface seals should be inspected for settling and cracking. When settling occurs, surface water can collect around the casing. If cracking occurs or if there is an improper seal, the water may migrate into the well. Well seal integrity can best be evaluated after a heavy rain or by adding water around the outside of the casing. If the seal is damaged, the seal should be replaced.

Comparative Costs of Maintenance

Evaluating the cost of rehabilitating a well versus abandoning and redrilling the well is an important consideration. Factors that should be evaluated are: the construction quality of the well, the accuracy of the well-intake placement and the precision of the documentation of the well. Capital costs of a new well should also be considered. The actual "cost" of rehabilitation is hard to calculate. Different rehabilitation programs may be similar in technique and price but may produce very different results. In some situations, different treatment techniques may be necessary to effectively treat adjacent wells. Sometimes techniques that once improved a well may only have a short-term benefit or may no longer be effective. However, the cost of not maintaining or rehabilitating a monitoring well may be very high. The money spent through the years on man-hours for sample collection and laboratory sample analyses may be wasted by the collection of unrepresentative data. Proper maintenance and rehabilitation in the long run is a good investment. If rehabilitation is not successful, abandonment of the well should be considered.

Well Abandonment

Introduction

Unplugged or improperly plugged abandoned wells pose a serious threat to ground water. These wells serve as a pathway for surface pollutants to infiltrate into the subsurface and present an opportunity for various qualities of water to mix. Currently, many sites are being monitored for low concentrations of contaminants. As detection limits are lowered, it becomes more important to have confidence in the monitoring system. An improperly installed or maintained monitoring network can produce anomalous sample results. Proper abandonment is crucial to the dependability of the remaining or new installations.

The objectives of an abandonment procedure are to: 1) eliminate physical hazards; 2) prevent ground-water contamination, 3) conserve aquifer yield and hydrostatic head and 4) prevent intermixing of subsurface water (United States Environmental Protection Agency, 1975; American Water Works Association, 1984). The purpose of sealing an abandoned well is to prevent any further disturbance to the pre-existing hydrogeologic conditions that exist within the subsurface. The plug should prevent vertical movement within the borehole and confine the water to the original zone of occurrence.

Many states have regulations specifying the approved procedures for abandonment of water supply wells. Some states require prior notification of abandonment actions and extensive documentation of the actual abandonment procedures. However, few states have specific requirements for abandonment of monitoring wells.

Well Abandonment Considerations

Selection of the appropriate method for abandonment is based on the information that has been compiled for each well. Factors that are considered include: 1) casing material, 2) casing condition, 3) diameter of the casing, 4) quality of the original seal, 5) depth of the well, 6) well plumbness, 7) hydrogeologic setting and 8) the level of contamination and the zone or zones where contamination occurs. The type of casing and associated tensile strength limit the pressure that can be applied when pulling the casing or acting as a guide when overdrilling. For example, PVC casing may break off below grade during pulling. The condition of any type of casing also may prohibit pulling. The diameter of the casing may limit the technique that is selected. For example, hollow-stem augers may not be effective for overdrilling large-diameter wells because of the high torque required to turn large-diameter augers. The quality of the original annular seal may also be a determining factor. For example, if a poor seal was constructed, then pulling the casing may be accomplished with minimum effort. The depth of the well may limit the technique applied. The plumbness of a well may influence technique by making overdrilling or casing pulling more difficult. The hydrogeology of the site may also influence the technique selected. For example, hollow-stem augers may be used for overdrilling in unconsolidated deposits but not in rock formations. The availability of a rig type and site conditions may also be determining

factors. The level of contamination and zone in which contamination occurs may modify the choice of technique. If no cross-contamination can occur between various zones and contamination cannot enter from the surface, grouting the well from bottom to top without removing the casing may be sufficient.

Well Abandonment Procedures

Well abandonment procedures involve filling the well with grout. The well may be filled completely or seals placed in appropriate zones and the well only partially filled with grout. Completely filling the well minimizes the possibility of borehole collapse and shifting of seals. The material used to fill the well can be either carefully selected natural material with a permeability that approximates the permeability of the natural formation or a grout mixture with a lower permeability. If more than one zone is present in the well, then either intermediate seals must be used with natural materials or the well must be grouted. Monitoring wells are most commonly abandoned by completely filling the well with a grout mixture.

Wells can be abandoned either by removing the casing or by leaving all or part of the casing in place and cutting the casing off below ground level. Because the primary purpose of well abandonment is to eliminate vertical fluid migration along the borehole, the preferred method of abandonment involves casing removal. If the casing is removed and the borehole is unstable, grout must be simultaneously emplaced as the casing is removed in order to prevent borehole collapse and an inadequate seal. When the casing is removed, the borehole can be sealed completely and there is less concern about channeling in the annular space or inadequate casing/grout seals. However, if the casing is left in place, the casing should be perforated and completely pressure-grouted to reduce the possibility of annular channeling. Perforating small-diameter casings in situ is difficult, if not impossible.

Many different materials can be used to fill the borehole. Bentonite, other clays, sand, gravel, concrete and neat cement all may have application in certain abandonment situations. Appendix C contains recommendations for well abandonment that are provided by the American Water Works Association (1984). These guidelines address the use of different materials for filling the borehole in different situations. Regardless of the type of material or combination of materials used for monitoring well abandonment, the sealant must be free of contaminants and must minimize chemical alteration of the natural groundwater quality. For example, neat cement should not be used in areas where the pH of the ground water is acidic. The ground water will attack the cement and reduce the effectiveness of the seal; the neat cement also raises the pH and alters ground-water chemistry.

Procedures for Removing Casing —

If the well was not originally grouted, the casing may be pulled by hydraulic jacks or by "bumping" the casing with a rig. A vibration hammer also may be used to speed up the task. Casing cutters can be used to separate the drive shoe from the bottom of the casing (Driscoll, 1986). If the well intake was installed by telescoping, the intake may be removed by sandlocking (United States Environmental Protection Agency, 1975).

A properly sized pulling pipe must, be used to successfully implement the sandlocking technique. Burlap strips, 2 to 4 inches wide, and approximately 3 feet long are tied to the pulling pipe. The pipe is lowered into the borehole to penetrate approximately 2/3 of the length of the well intake. The upper portion of the well intake above the burlap is slowly filled with clean angular sand by washing the sand into the well. The pulling pipe is then slowly lifted to create a locking effect. Constant pressure is applied and increased until the well intake begins to move. In some instances, jarring the pipe may assist in well intake removal, but in some cases this action may result in loss of the sand lock. As the well intake is extracted from the well, the sand packing and pipe are removed. Many contractors have developed variations of this sandlocking technique for specific situations. For example, slots can be cut in the pulling pipe at the level adjacent to the top of the well intake to allow excess sand to exit through the pulling pipe. These slots prevent the well intake from being overfilled and sandlocking the entire drill string. Slots can also be cut in the pipe just above the burlap so that sand can be backwashed or bailed from the inside pipe if the connection should need to be broken. Right and left-hand couplings located between the drill pipe and pulling pipe may be installed to disconnect the drill string if it becomes locked. Well intakes that are 2 to 6 inches in diameter can be removed by latch-type tools. For example, an elliptical plate cut in half with a hinge may be used. The plate folds as it is placed in the well and unfolds when lifted. If the well intake has a sump, the tool can be locked under the sump; if there is no sump, the tool can be locked under the well intake (Driscoll, 1986).

Another technique that may be used in conjunction with sandlocking involves filling the borehole with a clay-based drilling fluid through the pulling pipe while pulling the well intake and casing from the bottom. The fluid prevents the borehole from collapsing. The level of the fluid is observed to determine if the borehole is collapsing. Fluid rises if collapse is occurring. If fluid is falling, it is an indication that fluid is infiltrating into the surrounding formation. In this technique, the borehole is grouted from the bottom to the surface.

Overdrilling can also be used to remove casing from the borehole. In overdrilling, a large-diameter hollow-stem auger is used to drill around the casing. A large-diameter auger is used because a larger auger is less likely to veer off the casing during drilling. The hollow stem should be at least 2 inches larger than the casing that is being removed. For example, a 3 1/4-inch inside-diameter auger should not be used to overdrill a 2-inch diameter casing. The augers are used to drill to the full depth of the previous boring. If possible, the casing should be pulled in a "long" string, or in long increments. If the casing sticks or breaks, jetting should be used to force water down the casing and out the well intake. If this technique fails, the augers can be removed one section at a time and the casing can be cut off in the same incremental lengths. After all casing has been removed, the hollow-stem augers are reinserted and rotated to the bottom of the borehole. All the debris from the auger interior should be cleaned out, the augers extracted and the borehole filled with grout by using a tremie pipe (Wisconsin Department of Natural Resources, 1985). The technique of overdrilling is not limited to hollow-stem augers. Overdrilling can also be accomplished by direct rotary techniques using air, foam or mud.

Limiting factors in overdrilling are the diameter of the well and the hydrogeology of the surrounding formation. When overdrilling, an attempt should be made to remove all annular sealant so a good seal can be obtained between the borehole wall and the grout. The plumbness of the original installation is also very important; if the well was not installed plumb, then overdrilling may be difficult.

A variation of overdrilling was used by Perrazo et al. (1984) to remove 4-inch PVC casing from monitoring wells. First, the well was filled with a thick bentonite slurry to prevent the PVC cuttings from settling in the borehole. The auger was regularly filled with slurry to keep the casing full and to form a mudcake on the wall. This mudcake served as a temporary seal until a permanent seal was installed. A hollow-stem auger was used with a 5 to 10-foot section of NW rod welded onto the lead auger for use as a guide in drilling out the PVC casing. The auger was rotated, and the casing was cut and spiraled to the surface. A 2-inch diameter roller bit was threaded onto a drill rod and advanced to ensure the bottom area would be sealed to the original depth. The grout mixture was pumped down the drill stem and out the roller bit, displacing the bentonite slurry and water to the surface. In wells where there was not sufficient pressure to displace the bentonite slurry and standing water, the roller bit and drill stem were removed, a pressure cap was threaded onto the top auger flight and grout was pumped through the cap until increasing pressure forced the grout to displace the bentonite slurry and water. The augers were then removed and the grout was alternately "topped off" as each flight was removed.

Another technique involves jetting casing out of the well with water. If the casing sticks or breaks off, a small-diameter fish tail-type bit is connected to an A-rod to drill out the thermoplastic casing. The drilling fluid flushes the cuttings to the surface. After the borehole is cleaned, a tremie pipe is used to emplace grout from the bottom to the surface (Wisconsin Department of Natural Resources, 1985).

Procedures for Abandonment Without Casing Removal —

If the casing is in poor condition, the interval adjacent to the water-bearing zones can be ripped or perforated with casing rippers, and then the casing is filled and pressure grouted (United States Environmental Protection Agency, 1975; Driscoll, 1986). A concern when using this method is the accurate placement and effectiveness of the cuts (Perazzo et al., 1984). Casing may be gun-perforated by using a device that fires steel projectiles through the casing and into the formation. A jet-perforating device may be used that is similar to the gun-perforator except that a pre-shaped charge of high explosives is used to burn holes through the casing (Ingersoll-Rand, 1985). The top portion of the casing is then pulled so that a watertight plug in the upper 15 to 20 feet can be attained. This step may be omitted where the annular space was originally carefully grouted (Driscoll, 1986).

Using Plugs —

Three types of bridge plugs can be used to isolate hydraulic zones. These include: 1) permanent bridge seals, 2) intermediate seals and 3) seals at the uppermost aquifer. The permanent bridge seal is the most deeply located seal that is used to form a "bridge" upon which fill material can be placed. Permanent bridge seals prevent cross-contamination between lower and upper water-bearing zones. Permanent seals are comprised of cement. Temporary bridges of neoprene plastic or other elastomers can provide support for a permanent bridge during installation (United States Environmental Protection Agency, 1975).

Intermediate seals are located between water-bearing zones to prevent intermixing of different-quality water. Intermediate seals are comprised of cement, sand/cement or concrete mixes and are placed adjacent to impermeable zones. The remaining permeable zones are filled with clean disinfected sand, gravel or other material (United States Environmental Protection Agency, 1975).

The seal at the uppermost aquifer is located directly above the uppermost productive zone. The purpose is to seal out surface water. An uppermost aquifer seal is typically comprised of cement, sand/cement or concrete. In artesian conditions, this seal prevents water from flowing to the surface or to shallower formations (United States Environmental Protection Agency, 1975). This plugging technique is generally used to isolate usable and non-usable zones and has been used extensively in the oil and gas industry.

If artesian conditions are encountered, several techniques can be used to abandon the well. To effectively plug an artesian well, flow must be stopped and the water level lowered during seal emplacement. The water level can be lowered by: 1) drawing down the well by pumping nearby wells, 2) placing fluids of high specific gravity in the borehole or 3) elevating the casing high enough to stop the flow (Driscoll, 1986). If the rate of flow is high, neat cement or sand/cement grout can be piped under pressure, or a packer can be located at the bottom of the confining formation above the production zone (United States Environmental Protection Agency, 1975). Fast-setting cement can sometimes be used in sealing artesian wells (Herndon and Smith, 1984).

Grouting Procedures for Plugging

All materials used for grouting should be clean and stable; water used should be free from oil and other contaminants (Driscoll, 1986). Grout should be applied in one continuous grouting procedure from bottom to top to prevent segregation, dilution and bridging of the sealant. The end of the tremie pipe should always remain immersed in the slurry of grout throughout the emplacement procedure. Recommendations for grout proportions and emplacement procedures are discussed in the section entitled "Annular Seals."

Many states permit or recommend a cement/bentonite mixture. The bentonite possesses swelling characteristics that make it an excellent plugging material (Van Eck, 1978). The grout mixture used should be compatible with soil and water chemistry. For example, a salt-saturated cement should be used for cementing in a salt-saturated area. The cement/bentonite mixture should not extend through the vadose zone to the land surface or be used in areas of low soil moisture because cracking and channeling due to dessication can allow surface water to infiltrate along the casing (Driscoll, 1986). To ensure that the borehole was properly grouted, records should be kept of the

calculated volume of the borehole and the volume of grout that was used; any discrepancy should be explained.

A concrete cap should be placed on the top of a cement/bentonite plug. The concrete cap should be marked with a piece of metal or iron pipe and then covered by soil. The metal allows for easy location of the well in the future by a metal detector or magnetometer.

Clean-up, Documentation and Notification

After abandonment is accomplished, proper site clean-up should be performed. For example, any pits should be back-filled and the area should be left clean (Fairchild and Canter, 1984). Proper and accurate documentation of all procedures and materials used should be recorded. If regulations require that abandonment of wells be reported, information should be provided on the required forms and in compliance with the state regulations. Table 43 shows information that is typically recorded on a well abandonment form. The location of abandoned wells should be plotted on a map and referenced to section lines, lot lines, nearby roads and buildings as well as any outstanding geological features (Aller, 1984).

Table 43. Well Abandonment Data (After Wisconsin Department of Natural Resources, 1985)

- Name of property owner
- Address of owner/property
- Well location (street, section number, township and range)
- Type of well installation method and date (drilled, driven, bored, dug), purpose of well (OW, PIEZ, LYS)
- Depth of well
- Diameter of well
- Depth of casing
- Depth to rock
- Depth to water
- Formation type
- Material overlying rock (clay, sand, gravel, etc.)
- Materials and quantities used to fill well in specific zones, detailing in which formations and method used
- Casing removed or left in place
- Firm completing work
- Signature of person doing work
- Address of firm

References

Aller, Linda, 1984. Methods for determining the location of abandoned wells; United States Environmental Protection Agency, EPA-600/2-83-123, National Water Well Association, Dublin, Ohio, 130 pp.

American Water Works Association, 1984. Appendix I: Abandonment of test holes, partially completed wells and completed wells; American Water Works Association Standard for Water Wells, American Water Works Association, Denver, Colorado, pp. 45-47.

Barcelona, M.J., J.P. Gibb, J.A. Helfrich and E.E. Garske, 1985a. Practical guide for ground-water sampling; Illinois State Water Survey, SWS Contract Report 374, Champaign, Illinois, 93 pp.

Brownlee, Dorothy S., 1985. A step-by-step approach to ground water contamination problems; Proceedings of the Second Annual Eastern Regional Ground-Water Conference, National Water Well Association, Dublin, Ohio, pp. 1-24.

Connecticut Environmental Protection Agency, 1983. Ground-water monitoring guidelines for hazardous waste management facilities; Hazardous Materials Management Unit and Water Compliance Unit, Hartford, Connecticut, 20 pp.

Driscoll, Fletcher G., 1986. Ground water and wells; Johnson Division, St. Paul, Minnesota, 1089 pp.

Fairchild, Deborah M. and Larry W. Canter, 1984. Abandoned wells and ground water; Ground Water Age, vol. 19, no. 3, pp. 33-39.

Gass, Tyler E., Truman W. Bennett, James Miller and Robin Miller, 1980. Manual of water well maintenance and rehabilitation technology; National Water Well Association, Dublin., Ohio, 247 pp.

Herndon, Joe and Dwight K. Smith, 1984. Setting down-hole plugs: a state-of-the-art; Proceedings of the First National Conference on Abandoned Wells: Problems and Solutions, University of Oklahoma, Environmental and Ground-Water Institute, Norman., Oklahoma, pp. 227-250.

Ingersoll-Rand, 1985. Drilling terminology; Ingersoll-Rand Rotary Drill Division, Garland, Texas, 125 pp.

National Council of the Paper Industry for Air and Stream Improvement, 1982. A guide to ground-water sampling; Technical Bulletin no. 362, New York, New York, 22 pp.

Nebraska Department of Environmental Control, 1984. Guidelines for design and construction of water-quality monitoring wells; Program Plans Section, Water and Waste Management Division, Lincoln, Nebraska, 11 pp.

Perazzo, James A., Richard C. Dorrler and James P. Mack, 1984. Long-term confidence in ground water monitoring systems; Ground Water Monitoring Review, vol. 4, no. 4, pp. 119-123.

Stewart, David M., 1970. The rock and bong technique of measuring water levels in wells; Ground Water, vol. 8, no. 6, pp. 14-18.

United States Environmental Protection Agency, 1975. Manual of water well construction practices; United States Environmental Protection Agency, Office of Water Supply, EPA-570/9-75-001, 156 pp.

United States Environmental Protection Agency, 1986. RCRA ground-water monitoring technical enforcement guidance document; Office of Waste Programs Enforcement, Office of Solid Waste and Emergency Response, Washington, D.C., OSWER-9950.1, 317 pp.

Van Eck, Orville J., 1978. Plugging procedures for domestic wells; Public Information Circular Number 11, Iowa Geological Survey, Des Moines, Iowa, 7 pp.

Wisconsin Department of Natural Resources, 1985. Guidelines for monitoring well installation, Appendix B; Bureau of Solid Waste Management, Madison, Wisconsin, 35 pp.

Master References

Aardvark Corporation, 1977. Product literature; Puyallup, Washington, 2 pp.

Acker Drill Company, Inc., 1985. Soil sampling tools catalog; Scranton, Pennsylvania, 17 pp.

Acker, W.L., 1974. Basic procedures for soil sampling and core drilling; Acker Drill Company, Inc., Scranton, Pennsylvania, 246 pp.

Ahrens, T.P., 1957. Well design criteria: part one; Water Well Journal, vol. 11, no. 9, pp. 13-30.

Ahrens, T.P., 1970. Basic considerations of well design: part III; Water Well Journal, vol. 24, no. 6, pp. 47-51.

Aller, Linda, 1984. Methods for determining the location of abandoned wells; United States Environmental Protection Agency, EPA-600/2-83-123, National Water Well Association, Dublin, Ohio, 130 pp.

American Society for Testing and Materials, 1981. Standard specification for thermoplastic water well casing pipe and couplings made in standard dimension ratios (SDR): F-480; 1987 Annual Book of American Society for Testing Materials Standards, Philadelphia, Pennsylvania, pp. 1028-1033.

American Society for Testing and Materials, 1983. Standard practice for thin-wall tube sampling of soil D1587; 1986 Annual Book of American Society for Testing and Materials Standards, Philadelphia; Pennsylvania, pp. 305-307.

American Society for Testing and Materials, 1984. Standard method for penetration test and split barrel sampling of soils: D1586; 1986 Annual Book of American Society for Testing and Materials Standards, Philadelphia, Pennsylvania, pp. 298-303.

American Society for Testing and Materials, 1986. Standard specification for poly (vinyl chloride) (PVC) plastic pipe, schedules 40, 80 and 120: D1785; 1987 Annual Book of American Society for Testing Materials Standards, Philadelphia, Pennsylvania, pp. 89-101.

American Water Works Association, 1984. Appendix I: Abandonment of test holes, partially completed wells and completed wells; American Water Works Association Standard for Water Wells, American Water Works Association, Denver, Colorado, pp. 45-47.

Anderson, D.C., K.W. Brown and J.W. Green, 1982. Effects of organic fluids on the permeability of clay soil liners; Land Disposal of Hazardous Waste: Proceedings of the 8th Annual Research Symposium, United States Environmental Protection Agency Report # EPA-600/9-82-002, pp. 179-191.

Anderson, M.P., 1984. Movement of contaminants in ground water: ground water transport-advection and dispersion; Ground-Water Contamination, Studies in Geophysics; National Academy Press, Washington, D.C., 179 pp.

Andres, K.G. and R. Canace, 1984. Use of the electrical resistivity technique to delineate a hydrocarbon spill in the coastal plain deposits of New Jersey; Proceedings of the NWWA/API Conference on Petroleum Hydrocarbons and Organic Chemicals in Ground Water: Prevention, Detection and Restoration; National Water Well Association, Dublin, Ohio, pp. 188-197.

Barcelona, M.J., 1984. TOC determinations in ground water; Ground Water, vol. 22, no. 1, pp. 18-24.

Barcelona, M.J., G.K. George and M.R. Schock, 1988. Comparison of water samples from PTFE, PVC and SS monitoring wells; United States Environmental Protection Agency, Office of Research and Development, Environmental Monitoring Systems Laboratory, Las Vegas, EPA 600/X-88/091, 37 pp.

Barcelona, M.J., J.P. Gibb, J.A. Helfrich and E.E. Garske, 1985a. Practical guide for ground-water sampling; Illinois State Water Survey, SWS Contract Report 374, Champaign, Illinois, 93 pp.

Barcelona, M.J., J.P. Gibb and R. Miller, 1983. A guide to the selection of materials for monitoring well construction and ground-water sampling; Illinois State Water Survey, SWS Contract Report 327, Champaign, Illinois, 78 pp.

Barcelona, M.J. and J.A. Helfrich, 1986. Well construction and purging effects on ground-water samples; Environmental Science & Technology, vol. 20, no. 11, pp. 1179-1184.

Barcelona, M.J. and J.A. Helfrich, 1988. Laboratory and field studies of well-casing material effects; Proceedings of the Ground Water Geochemistry Conference, National Water Well Association, Dublin, Ohio, pp. 363-375.

Barcelona, Michael J., John A. Helfrich and Edward E. Garske, 1985b. Sampling tubing effects on ground-water samples; Analytical Chemistry, vol. 57, no. 2, pp. 460-464.

Bates, Robert L. and Julia A. Jackson, eds., 1987. Glossary of geology; American Geological Institute, Alexandria, Virginia, 788 pp.

Bear, J., 1972. Dynamics of fluids in porous media; Elsevier, New York, 764 pp.

Beck, B.F., 1983. A common pitfall in the design of RCRA ground-water monitoring programs; Ground Water, vol. 21, no. 4, pp. 488-489.

Blake, S.B. and R.A. Hall, 1984. Monitoring petroleum spills with wells: some problems and solutions; Proceedings of the Fourth National Symposium on Aquifer Restoration and Ground-Water Monitoring; National Water Well Association, Dublin, Ohio, pp. 305-310.

Boettner, Edward A., Gwendolyn L. Ball, Zane Hollingsworth and Rumulo Aquino, 1981. Organic and organotin compounds leached from PVC and CPVC pipe; United States Environmental Protection Agency Report # EPA-600/1-81-062, 102 pp.

Brobst, R.D. and P.M. Buszka, 1986. The effect of three drilling fluids on ground-water sample chemistry; Ground Water Monitoring Review, vol. 6, no. 1, pp. 62-70.

Brown, K.W., J.W. Green, and J,C. Thomas, 1983. The influence of selected organic liquids on the permeability of clay liners; Land Disposal of Hazardous Waste: Proceedings of the 9th Annual Research Symposium, United States Environmental Protection Agency Report # EPA-600/9-83-018, pp. 114-125.

Brownlee, Dorothy S., 1985. A step-by-step approach to ground water contamination problems; Proceedings of the Second Annual Eastern Regional Ground-Water Conference, National Water Well Association, Dublin, Ohio, pp. 1-24.

Bryden, G.W., W.R. Mabey and K.M. Robine, 1986. Sampling for toxic contaminants in ground water; Ground-Water Monitoring Review, vol. 6, no. 2, pp. 67-72.

Buckeye Drill Company/Bucyrus Erie Company, 1982. Buckeye drill operators manual; Zanesville, Ohio, 9 pp.

California Department of Health Services, 1986. The California site mitigation decision tree manual; California Department of Health Services, Sacramento, California, 375 pp.

Campbell, M.D. and J.H. Lehr, 1973. Water Well Technology; McGraw-Hill Book Company, New York, New York, 681 pp.

Campbell, M.D. and J.H. Lehr, 1975. Well cementing; Water Well Journal, vol. 29, no. 7, pp. 39-42.

Central Mine Equipment Company, 1987. Catalog of product literature; St. Louis, Missouri, 12 pp.

Cherry, J.A., R.W. Gillham and J.F. Barker, 1984. Contaminants in ground water: chemical processes; Ground-Water Contamination, Studies in Geophysics; National Academy Press, Washington, D.C., 179 pp.

Connecticut Environmental Protection Agency, 1983. Ground water monitoring guidelines for hazardous waste management facilities; Hazardous Materials Management Unit and Water Compliance Unit, Hartford, Connecticut, 20 pp.

Curran, Carol M. and Mason B. Tomson, 1983. Leaching of trace organics into water from five common plastics; Ground Water Monitoring Review, vol. 3, no. 3, pp. 68-71.

Dablow, John S. III, Grayson Walker and Daniel Persico, 1988. Design considerations and installations techniques for monitoring wells cased with Teflon® PTFE; Ground-Water Contamination Field Methods, Collins and Johnson editors, ASTM Publication Code Number 04-963000-38, Philadelphia, Pennsylvania, pp. 199-205.

Deluca, R.J. and B.K. Buckley, 1985. Borehole logging to delineate fractures in a contaminated bedrock aquifer; Proceedings of the NWWA Conference on Surface and Borehole Geophysical Methods in Ground-Water Investigations; National Water Well Association, Dublin, Ohio, pp. 387-397.

Diedrich Drilling Equipment. 1986. Catalog of product literature; LaPorte, Indiana, 106 pp.

Driscoll, Fletcher G., 1986. Ground water and wells; Johnson Division, St. Paul, Minnesota, 1089 pp.

Dunbar, D., H. Tuchfeld, R. Siegel and R. Sterbentz, 1985. Ground-water quality anomalies encountered during well construction, sampling and analysis in the environs of a hazardous waste management facility; Ground Water Monitoring Review, vol. 5, no. 3, pp. 70-74.

Electric Power Research Institute, 1985. Ground water manual for the electric utility industry: groundwater investigations and mitigation techniques, volume 3; Research Reports Center, Palo Alto, California, 360 pp.

Everett, Lorne G., 1980. Ground-water monitoring; General Electric Company technology marketing operation, Schenectady, New York, 440 pp.

Everett, L.G., L.G. Wilson and E.W. Hoylman, 1984. Vadose zone monitoring for hazardous waste sites; Noyes Data Corporation, Park Ridge, New Jersey, 360 pp.

Fairchild, Deborah M. and Larry W. Canter, 1984. Abandoned wells and ground water; Ground Water Age, vol. 19, no. 3, pp. 33-39.

Freeze, R. A. and J.A. Cherry, 1979. Ground Water; Prentice-Hall, Inc., Englewood Cliffs, New Jersey, 604 pp.

Garber, M.S. and F.C. Koopman, 1968. Methods of measuring water levels in deep wells; Techniques of Water-Resources Investigations of the United States Geological Survey, Book 8, Instrumentation; United States Government Printing Office, Washington, D.C., 23 pp.

Gass, Tyler E., 1984. Methodology for monitoring wells; Water Well Journal, vol. 38, no. 6, pp. 30-31.

Gass, Tyler E., 1986. Monitoring well development; Water Well Journal, vol. 40, no. 1, pp. 52-55.

Gass, Tyler E., Truman W. Bennett, James Miller and Robin Miller, 1980. Manual of water well maintenance and rehabilitation technology; National Water Well Association, Dublin, Ohio, 247 pp.

Gibb, James P., 1987. How drilling fluids and grouting materials affect the integrity of ground-water samples from monitoring wells, opinion I; Ground Water Monitoring Review, vol. 7, no. 1, pp. 33-35.

Gillham, R.W., 1982. Syringe devices for ground-water sampling; Ground Water Monitoring Review, vol. 2, no. 2, pp. 36-39.

Gillham, R.W., M.L. Robin, J.F. Barker and J.A. Cherry, 1983. Ground-water monitoring and sample bias; API Publication 4367, Environmental Affairs Department, American Petroleum Institute, Washington, D.C., 206 pp.

Gross, S., 1970. Modern plastics encyclopedia; McGraw-Hill Book Company, New York, New York, vol. 46, 1050 pp.

Guswa, J.H., 1984. Application of multi-phase flow theory at a chemical waste landfill, Niagara Falls, New York; Proceedings of the Second International Conference on Ground-Water Quality Research; Oklahoma State University Printing Services, Stillwater, Oklahoma, pp. 108-111.

Hackett, Glen, 1987. Drilling and constructing monitoring wells with hollow-stem augers, part 1: drilling considerations; Ground Water Monitoring Review, vol. 7, no. 4, pp. 51-62.

Hackett, Glen, 1988. Drilling and constructing monitoring wells with hollow-stem augers, part II: monitoring well installation; Ground Water Monitoring Review, vol. 8, no. 1, pp. 60-68.

Hamilton, Hugh, 1985. Selection of materials in testing and purifying water; Ultra Pure Water, January/February 1985, 3 pp.

Heath, R.C., 1984. Ground-water regions of the United States; United States Geological Survey Water Supply Paper 2242; Superintendent of Documents, United States Government Printing Office, Washington, D.C., 78 pp.

Helweg, Otto J., Verne H. Scott and Joseph C. Scalmanini, 1984. Improving well and pump efficiency; American Water Works Association, 158 pp.

Herndon, Joe and Dwight K. Smith, 1984. Setting down-hole plugs: a state-of-the-art; Proceedings of the First National Conference on Abandoned Wells: Problems and Solutions, University of Oklahoma, Environmental and Ground-Water Institute, Norman, Oklahoma, pp. 227-250.

Hinchee, R.E. and H.J. Reisinger, 1985. Multi-phase transport of petroleum hydrocarbons in the subsurface environment: theory and practical application; Proceedings of the NWWA/API Conference on Petroleum Hydrocarbons and Organic Chemicals in Ground Water: Prevention, Detection and Restoration; National Water Well Association, Dublin, Ohio, pp. 58-76.

Huber, W.F., 1982. The use of downhole television in monitoring applications; Proceedings of the Second National Symposium on Aquifer Restoration and Ground-Water Monitoring; National Water Well Association, Dublin, Ohio, pp. 285-286.

Hvorslev, M.J., 1949. Subsurface exploration and sampling of soils for civil engineering purposes; United States Army

Corps of Engineers, Waterways Experiment Station, Vicksburg, Mississippi, 465 pp.
Ingersoll-Rand, 1976. The water well drilling equipment selection guide; Ingersoll-Rand, Washington, New Jersey, 12 pp.
Ingersoll-Rand, 1985. Drilling terminology; Ingersoll-Rand Rotary Drill Division, Garland, Texas, 12.5 pp.
Johnson, Roy C., Jr., Carl E. Kurt and George F. Dunham, Jr., 1980. Well grouting and casing temperature increases; Ground Water, vol. 18, no. 1, pp. 7-13.
Johnson Screens, Inc. 1988. Johnson well screens prices and specifications; product literature, St. Paul, Minnesota, 20 pp.
Johnson, Thomas L., 1983. A comparison of well nests versus single-well completions; Ground Water Monitoring Review, vol. 3, no. 1, pp. 76-78.
Junk, Gregor A., Harry J. Svec, Ray D. Vick and Michael J. Avery, 1974. Contamination of water by synthetic polymer tubes; Environmental Science and Technology, vol. 8, no. 13, pp. 1100-1106.
Keely, J.F., 1986. Ground-water contamination assessments; Ph.D. dissertation, Oklahoma State University, Stillwater, Oklahoma, 408 pp.
Keely, Joseph F. and Kwasi Boateng, 1987a. Monitoring well installation, purging and sampling techniques part 1: conceptualizations; Ground Water, vol. 25, no. 3, pp. 300-313.
Keely, Joseph F. and Kwasi Boateng, 1987b. Monitoring well installation, purging, and sampling techniques part 2: case histories; Ground Water, vol. 25, no. 4, pp. 427-439.
Keely, J.F. and C.F. Tsang, 1983. Velocity plots and capture zones of pumping centers for ground-water investigations; Ground Water, vol. 21, no. 6, pp. 701-714.
Kerfoot, W.B., 1982. Comparison of 2-D and 3-D ground-water flowmeter probes in fully penetrating monitoring wells; Proceedings of the Second National Symposium on Aquifer Restoration and Ground-Water Monitoring; National Water Well Association, Dublin, Ohio, pp. 264-268.
Keys, W.S., 1968. Well logging in ground-water hydrology; Ground Water, vol. 6, no. 1, pp. 10-18.
Keys, W.S. and L.M. MacCary, 1971. Application of borehole geophysics to water-resources investigations, Book 2; United States Department of the Interior, Washington, D.C., 126 pp.
Kovski, J.R., 1984. Physical transport process for hydro–carbons in the subsurface; Proceedings of the second International Conference on Ground Water Quality Research; Oklahoma State University Printing Services, Stillwater, Oklahoma, pp. 127-128.
Krynine, Dimitri P. and William R. Judd, 1957. Principles of engineering geology and geotechnics; McGraw -Hill, New York, New York, 730 pp.
Kurt;, C.E., 1983. Cement-based seals for thermoplastic water well casings; Water Well Journal, vol. 37, no. 1, pp. 38-40.
Kurt, Carl E. and R.C. Johnson, Jr., 1982. Permeability of grout seals surrounding thermoplastic well casing; Ground-Water, vol. 20, no. 4, pp. 415-419.
Kwader, T., 1985. Resistivity-porosity cross plots for determining in-situ formation water-quality case examples; Proceedings of the NWWA Conference on Surface and Rorehole Geophysical Methods in Ground-Water Investigations; National Water Well Association, Dublin, Ohio, pp. 415-424.
Layne-Western Company, Inc., 1983. Water, geological and mineral exploration utilizing dual-wall reverse circulation; Product literature, Mission, Kansas, 8 pp.
Leach, Lowell E., Frank P. Beck, John T. Wilson and Dan H. Kampbell, 1988. Aseptic subsurface sampling technique for hollow-stem auger drilling; Proceedings of the Second National Outdoor Action Conference on Aquifer Restoration, Ground-Water Monitoring and Geophysical Methods, vol. I; National Water Well Association, Dublin, Ohio, pp. 31-51.
Lerch, W. and C.L. Ford, 1948. Long-time study of cement performance in concrete, chapter 3 - chemical and physical tests of the cements; Journal of the American Concrete Institute, vol. 44, no. 8, pp. 745-796.
Lindsey, G.P., 1985. Dry hole resistivity logging; Proceedings of the NWWA Conference on Surface and Borehole Geophysical Methods in Ground-Water Investigations; National Water Well Association, Dublin, Ohio, pp. 371-376.
Lithland, S.T., T.W. Hoskins and R.L. Boggess, 1985. A new ground-water survey tool: the combined cone penetrometer/ vadose zone vapor probe; Proceedings of the NWWA/AP1 Conference on Petroleum Hydrocarbons and Organic Chemicals in Ground Water: Prevention, Detection and Restoration; National Water Well Association, Dublin, Ohio, pp. 322-330.
Mabey, W.R. and T. Mill, 1984. Chemical transformation in ground water; Proceedings of the Second International Conference on Ground-Water Quality Research; Oklahoma State University Printing Services, Stillwater, Oklahoma, pp. 61-64.
Mackay, D.M., P.V. Roberts and J.A. Cherry, 1985. Transport of organic contaminants in ground water; Environmental Science & Technology, vol. 19, 110. 5, pp. 384-392.
Marrin, D.L. and G.M. Thompson, 1984. Remote detection of volatile organic contaminants in ground water via shallow soil gas sampling; Proceedings of the NWWA/API Conference on Petroleum Hydrocarbons and Organic Chemicals in Ground Water: Prevention, Detection and Restoration; National Water Well Association, Dublin, Ohio, pp. 172-187.
Marsh, J.M. and J. W. Lloyd, 1980. Details of hydrochemical variations in flowing wells; Ground Water, vol. 18, no. 4, pp. 366-373.
McCarty, P.L., M. Reinhard and D.E. Rittmann, 1981. Trace organics in ground water; Environmental Science & Technology, vol. 15, no. 1, pp. 40-51.
McCarty, P.L., B.E. Rittman and E.J. Douwer, 1984. Microbiological processes affecting chemical transformation in ground water; Ground-Water Pollution Microbiology, G. Britton and C.D. Gerba, editors, Wiley and Sons, New York, pp. 90-115.
McCray, Kevin B., 1986. Results of survey of monitoring well practices among ground water professionals; Ground Water Monitoring Review, vol. 6, no. 4, pp. 37-38.
Mickam, J.T., B.S. Levy and G.W. Lee, 1984. Surface and borehole geophysical methods in ground-water investigations; Ground-Water Monitoring Review, vol. 4, no. 4, pp. 167-171.
Miller, Gary D., 1982. Uptake and release of lead, chromium

and trace level volatile organics exposed to syntltetic well casings; Proceedings of the Second National Symposium on Aquifer-Restoration and Ground-Water Monitoring, National Water Well Association, Dublin, Ohio, pp. 236-245.

Minning, Robert 6., 1982. Monitoring well design and, installation; Proceedings of the Second National Symposium on Aquifer Restoration and Ground Water Monitoring; Columbus, Ohio, pp. 194-197.

Moberly, Richard L., 1985. Equipment decontamination; Ground Water Age, vol. 19, no. 8, pp. 36-39.

Mobile Drilling Company, 1982. Auger tools and accessories product literature; Indianapolis, Indiana, 26 pp.

Mobile Drilling Company, 1983. Mobile drill product catalog; Indianapolis, Indiana, 37 pp.

Moehrl, Kenneth E., 1964. Well grouting and well protection; Journal of the American Water Works Association, vol. 56, no. 4, pp. 423-431.

Molz, F.J. and C.E. Kurt, 1979. Grout-induced temperature rise surrounding wells; Ground Water, vol. 17, no. 3, pp. 264-269.

Morahan, T. and R.C. Doorier, 1984. The application of television borehole logging to ground-water monitoring programs; Ground-Water Monitoring Review, vol. 4, no. 4, pp. 172-175.

Morrison, R.D., 1984. Ground-water monitoring technology, procedures, equipment and applications; Timco Manufacturing, Inc., Prairie Du Sac, Wisconsin, 111 pp.

Nass, L.I., 1976. Encyclopedia of PVC; vols. I and II, Marcel Dekker, New York, 1249 pp.

National Council of the Paper Industry for Air and Stream Improvement, 1981. Ground-water quality monitoring well construction and placement; Stream Improvement Technical Bulletin Number 342, New York, New York, 39 pp.

National Council of the Paper Industry for Air and Stream Improvement, 1982. A guide to ground-water sampling; Technical Bulletin no. 362, New York, New York, 22 pp.

National Sanitation Foundation, 1988. National Sanitation Foundation Standard 14, Ann Arbor, Michigan, 65 pp.

National Water Well Association and Plastic Pipe Institute, 1981. Manual on the selection and installation of thermoplastic water well casing; National Water Well Association, Worthington, Ohio, 64 pp.

National Water Well Association of Australia, 1984. Drillers training and reference manual; National Water Well Association of Australia, St. Ives, South Wales, 267 pp.

Nebraska Department of Environmental Control, 1984. Guidelines for design and construction of water quality monitoring wells; Program Plans Section, Water and Waste Management Division, Lincoln, Nebraska, 11 pp.

Nielsen, D.M. and G.L. Yeates, 1985. A comparison of sampling mechanisms available for small-diameter ground-water monitoring wells; Proceedings of the Fifth National Symposium and Exposition on Aquifer Restoration and Ground-Water Monitoring; National Water Well Association, Dublin, Ohio, pp. 237-270.

Noel, M.R., R.C. Benson and P.M. Beam, 1983. Advances in mapping organic contamination: alternative solutions to a complex problem; National Conference on Managing Uncontrolled Hazardous Waste Sites, Washington, D.C.; Hazardous Materials Control Research Institute, Silver Spring, Maryland, pp. 71-75.

Norman, W.R., 1986. An effective and inexpensive gas-drive ground-water sampling device; Ground-Water Monitoring Review, vol. 6, no. 2, pp. 56-60.

Norton Performance Plastics, 1985. Chemware high performance laboratory products, C-102; product literature, Wayne, New Jersey, 18 pp.

Office of Technology Assessment, 1984. Protecting the nation's ground water from contamination, vols. I and II; United States Congress, Washington, D.C., 503 pp.

Parker, Louise V. and Thomas F. Jenkins, 1986. Suitability of polyvinyl chloride well casings for monitoring munitions in ground water; Ground Water Monitoring Review, vol. 6, no. 3, pp. 92-98.

Perazzo, James A., Richard C. Dorrler and James P. Hack, 1984. Long-term confidence in ground water monitoring systems; Ground Water Monitoring Review, vol. 4, no. 4, pp. 119-123.

Perry, Charles A. and Robert J. Hart, 1985. Installation of observation wells on hazardous waste site in Kansas using a hollow-stem auger; Ground Water Monitoring Review, vol. 5, no. 4, pp. 70-73.

Petroleum Extension Service, 1980. Principles of Drilling Fluid Control; Petroleum Extension Service, University of Texas, Austin, Texas, 215 pp.

Pettyjohn, W.A., 1976. Monitoring cyclic fluctuations in ground-water quality; Ground Water, vol. 14, no. 6. pp. 472-479.

Pettyjohn, W.A., 1982. Cause and effect of cyclic changes in ground-water quality; Ground-Water Monitorng Review, vol. 2, no. 1, pp. 43-49.

Pickens, J.F., J.A. Cherry, R. M. Coupland, G.E. Grisak, W.F. Merritt and B.A.Risto, 1981. A multilevel device for ground-water sampling; Ground Water Monitoring Review, vol. 1, no. 1, pp. 48-51.

Purdin, Wayne, 1980. Using nonmetallic casing for geothermal wells; Water Well Journal, vol. 34, no. 4, pp. 90-91.

Ramsey, Robert J., James M. Montgomery and George E. Maddox, 1982. Monitoring ground-water contamination in Spokane County, Washington; Proceedings of the Second National Symposium on Aquifer Restoration and Ground Water Monitoring, National Water Well Association, Worthington, Ohio, pp. 198-204.

Rehtlane, Erik A. and Franklin D. Patton, 1982. Multiple port piezometers vs. standpipe piezometers: an economic comparison; Proceedings of the Second National Symposium on Aquifer Restoration and Ground Water Monitoring, National Water Well Association, Worthington, Ohio, pp. 287-295.

Reinhard, M., J.W. Graydon, N.L. Goodman and J.F. Barker, 1984. The distribution of selected trace organics in the leachate plume of a municipal landfill; Proceedings of the Second International Conference on Ground-Water Quality Research; Oklahoma State University Printing Services, Stillwater, Oklahoma, pp. 69-71.

Reynolds, G.W. and Robert W. Gillham, 1985. Absorption of halogenated organic compounds by polymer materials commonly used in ground water monitors; Proceedings of the Second Canadian/American Conference on Hydrogeology, National Water Well Association, Dublin, Ohio, pp. 125-132.

Richter, Henry R. and Michael G. Collentine, 1983. Will my

monitoring wells survive down there?: design and installation techniques for hazardous waste studies; Proceedings of the Third National Symposium on Aquifer Restoration and Ground Water Monitoring, Columbus, Ohio, pp. 223-229.

Riggs, Charles O., 1983. Soil sampling in the vadose zone; Proceedings of the NWWA/U.S. EPA Conference on Characterization and Monitoring of the Vadose (Unsaturated) Zone, Las Vegas, Nevada, pp. 611-622.

Riggs, Charles O., 1986. Exploration for deep foundation analyses; Proceedings of the International Conference on Deep Foundations, Beijing, China, volume II, China Building Industry Press, Beijing, China, pp. 146-161.

Riggs, Charles O., 1987. Drilling methods and installation technology for RCRA monitoring wells; RCRA Ground Water Monitoring Enforcement: Use of the TEGD and COG, RCRA Enforcement Division, Office of Waste Programs Enforcement, United States Environmental Protection Agency, pp. 13-39.

Riggs, Charles O. and Allen W. Hatheway, 1988. Groundwater monitoring field practice - an overview; Ground-Water Contamination Field Methods, Collins and Johnson editors, ASTM Publication Code Number 04-963000-38, Philadelphia, Pennsylvania, pp. 121-136.

Ritchey, J.D., 1986. Electronic sensing device used for in-situ ground-water monitoring; Ground-Water Monitoring Review, vol. 16, no. 2, pp. 108-113.

Robin, M.J., D.J. Dytynshyn and S.J. Sweeny, 1982. Two gas-drive sampling devices; Ground-Water Monitoring Review, vol. 2, no. 1, pp. 63-65.

Sanders, P.J., 1984. New tape for ground-water measurements; Ground-Water Monitoring Review, vol. 4, no. 1, pp. 39-42.

Saunders, W.R. and R.M. Germeroth, 1985. Electromagnetic measurements for subsurface hydrocarbon investigations; Proceedings of the NWWA/API Conference on Petroleum Hydrocarbons and Organic Chemicals in Ground Water: Prevention, Detection and Restoration; National Water Well Association, Dublin, Ohio, pp. 310-321.

Scalf, M.R., J.F. McNabb, W.J. Dunlap, R.L. Cosby and J. Fryberger, 1981. Manual of ground-water quality sampling procedures, National Water Well Association, Dublin, Ohio, 93 pp.

Schalla, Ronald and Robert W. Landick, 1986. A new valved and air-vented surge plunger for developing small-diameter monitor wells; Ground Water Monitoring Review, vol. 6, no. 2, pp. 77-80.

Schmidt, Kenneth D., 1986. Monitoring well drilling and sampling in alluvial basins in arid lands; Proceedings of the Conference on Southwestern Ground Water Issues, Tempe, Arizona, National Water Well Association, Dublin, Ohio, pp. 443-455.

Schwarzenbach, R.P. and W. Giger, 1985. Behavior and fate of halogenated hydrocarbons in ground water; Ground-Water Quality, C.H. Ward, W. Giger and P.L, McCarty, editors; Wiley and Sons, New York, pp. 446-471.

Schwille, F., 1981. Ground-water pollution in porous media by fluids immiscible with water; Quality of Ground Water, Proceedings of an International Symposium, Noordwikeshout, The Netherlands; Studies in Environmental Science, vol. 17, Elsevier Scientific Company, Amsterdam, The Netherlands, 1128 pp.

Senger, J.A., 1985. Defining glacial stratigraphy with the neutron log; Proceedings of the NWWA Conference on Surface and Borehole Geophysical Methods in Ground-Water Investigations; National Water Well Association, Dublin, Ohio, pp. 355-368.

Sosebee, J.B., P.C. Geiszler, D.L. Winegardner and C.R. Fisher, 1983. Contamination of ground-water samples with PVC adhesives and PVC primer from monitor wells; Proceedings of the ASTM Second Symposium on Hazardous and Industrial Solid Waste Testing, ASTM STP 805, R.A. Conway and W.P. Gulledge, eds., American Society for Testing and Materials, Philadelphia, Pennsylvania, pp. 38-50.

Speedstar Division of Koehring Company, 1983. Well drilling manual; National Water Well Association., Dublin, Ohio, 72 pp.

Stewart, David M., 1970. The rock and bong technique of measuring water level in wells; Ground Water, vol. 8, no. 6, pp. 14-18.

Taylor, K.C., S.G. Wheatcraft and L.G. McMillion, 1985. A strategy for hydrologic interpretation of well logs; Proceedings of the NWWA Conference on Surface and Borehole Geophysical Methods in Ground-Water Investigations; National Water Well Association, Dublin, Ohio, pp. 314-323.

Timco Manufacturing Company, Inc., 1982. Geotechnical Products; product literature, Prairie Du Sac, Wisconsin, 24 pp.

Tomson, M.B., S.R. Hutchins, J.M. King and C.H. Ward, 1979. Trace organic contamination of ground water: methods for study and preliminary results; III World Congress on Water Resources, Mexico City, Mexico, vol. 8, pp. 3701-3709.

Troxell, G.E., H.E. Davis and J.W. Kelly, 1968. Composition and properties of concrete; McGraw-Hill Book Company, New York, New York, 529 pp.

United States Department of Interior, 1974. Earth manual, a water resources technical publication; Bureau of Reclamation, United States Government Printing Office, Washington, D.C., 810 pp.

United States Environmental Protection Agency, 1975. Manual of water well construction practices; United States Environmental Protection Agency, Office of Water Supply, EPA-570/9-75-001, 156 pp.

United States Environmental Protection Agency, 1984. Standard operating safety guide; United States Environmental Protection Agency Office of Emergency Response, United States Government Printing Office, Washington, DC., 166 pp.

United States Environmental Protection Agency, 1986. RCRA ground-water monitoring technical enforcement guidance document; Office of Waste Programs Enforcement, Office of Solid Waste and Emergency Response, OSWER-9950.1, United States Environmental Protection Agency, 317 pp.

United States Environmental Protection Agency, 1987. A compendium of Superfund field operations methods; United States Environmental Protection Agency Publication No. 540/P-87/001, 644 pp.

United States Environmental Protection Agency, 1987. Test methods for evaluating solid waste, physical/chemical methods (SW-846); Office of Solid Waste and Emergency

Response, Government Printing Office, Washington, D.C., 519 pp.

Urban, T.C. and W.H. Diment, 1985. Convection in boreholes: limits on interpretation of temperature logs and methods for determining anomalous fluid flow; Proceedings of the NWWA Conference on Surface and Borehole Geophysical Methods in Ground-Water Investigations; National Water Well Association, Dublin, Ohio, pp. 399-414.

Van Eck, Orville J., 1978. Plugging procedures for domestic wells; Public Information Circular Number 11, Iowa Geological Survey, Des Moines, Iowa, 7 pp.

Verbeck, G.J. and C.W. Foster, 1950. Long-time study of cement performance in concrete with special reference to heats of hydration; American Society for Testing and Materials Proceedings, Philadelphia, Pennsylvania, pp. 1235-1262.

Villaume, J.F., 1985. Investigations at sites contaminated with dense, non-aqueous phase liquids (DNAPLs); Ground-Water Monitoring Review, vol. 5, no. 2, pp. 60-74.

Voytek, J. Jr., 1982. Application of downhole geophysical methods in ground-water monitoring; Proceedings of the Second National Symposium on Aquifer Restoration and Ground-Water Monitoring; National Water Well Association, Dublin, Ohio, pp. 276-278.

Walker, William H., 1974. Tube wells, open wells, and optimum ground-water resource development; Ground Water, vol. 12, no. 1, pp. 10-15.

Wehran Engineering Corporation, 1977. Procedures manual for ground water monitoring at solid waste disposal facilities (SW-611); National Technical Information Service, Springfield, Virginia, 269 pp.

Wehrmann, H. Allen, 1983. Monitoring well design and construction; Ground Water Age, vol. 17, no. 8, pp. 35-38.

Williams, Ernest B., 1981. Fundamental concepts of well design; Ground Water, vol. 19, no. 5, pp. 527-542.

Williamson, D.A., 1984. Unified classification system; Bulletin of Engineering Geologists, vol. 21, no. 3, The Association of Engineering Geologists, Lawrence, Kansas, pp. 345-354.

Wilson, J.T., M.J. Noonan and J.F. McNabb, 1985. Biodegradation of contaminants in the subsurface; Ground-Water Quality, C.H. Ward, W. Giger and P.L. McCarty, editors; John Wiley and Sons, New York, 547 pp.

Wilson, L.G., 1980. Monitoring in the vadose zone: a review of technical elements and methods; U.S. Environmental Protection Agency Publication No. 600/7-80-134, 168 pp.

Wisconsin Department of Natural Resources, 1985. Guidelines for monitoring well installation, Appendix B; Bureau of Solid Waste Management, Madison, Wisconsin, 35 pp.

Yaniga, P.M. and J.G. Warburton, 1984. Discrimination between real and apparent accumulation of immiscible hydrocarbons on the water table: a theoretical and empirical analysis; Proceedings of the Fourth National Symposium on Aquifer Restoration and Ground-Water Monitoring; National Water Well Association, Dublin, Ohio, pp. 311-315.

Zapico, Michael M., Samuel Vales and John A. Cherry, 1987. A wireline piston core barrel for sampling cohesionless sand and gravel below the water table; Ground Water Monitoring Review, vol. 7, no. 3, pp. 74-82.

Appendix A
Drilling and Constructing Monitoring Wells With Hollow-Stem Augers

[This report was produced as a part of this cooperative agreement and was published by Hackett (1987 and 1988).]

Introduction

Since the 1950's, hollow-stem augers have been used extensively by engineers and exploration drillers as a practical method of drilling a borehole for soil investigations and other geotechnical work. The widespread use and availability of hollow-stem augers for geotechnical investigations has resulted in the adaptation of this method to drilling and installing ground-water monitoring wells. To date, hollow-stem augers represent the most widely used drilling method among ground-water professionals involved in constructing monitoring wells (McCray, 1986). Riggs and Hatheway (1988) estimate that more than 90 percent of all monitoring wells installed in unconsolidated materials in North America are constructed by using hollow-stem augers.

The drilling procedures used when constructing monitoring wells with hollow-stem augers, however, are neither standardized nor thoroughly documented in the published literature. Lack of standardization is partially due to variable hydrogeologic conditions which significantly influence hollow-stem auger drilling techniques and monitoring well construction practices. Many of these construction practices evolved in response to site-specific drilling problems which are unique to hollow-stem augers.

This report presents an objective discussion of hollow-stem auger drilling and monitoring well construction practices. The drilling equipment will be reviewed, and the advantages and limitations of the method for drilling and installing monitoring wells will be presented.

Auger Equipment

The equipment used for hollow-stem auger drilling includes either a mechanically or hydraulically powered drill rig which simultaneously rotates and axially advances a hollow-stem auger column. Auger drills are typically mounted on a self-contained vehicle that permits rapid mobilization of the auger drill from borehole to borehole. Trucks are frequently used as the transport vehicle; however, auger drills may also be mounted on all-terrain vehicles, crawler tractors or tracked carriers (Mobile Drilling Company, 1983). These drilling rigs often have multi-purpose auger-core-rotary drills which have been designed for geotechnical work. Multi purpose rigs may have: 1) adequate power to rotate, advance and retract hollow-stem augers; 2) adequate drilling fluid pumping and tool hoisting capability for rotary drilling; and 3) adequate rotary velocity, spindle stability and spindle feed control for core drilling (Riggs, 1986).

The continuously open axial stem of the hollow-stem auger column enables the borehole to be drilled while the auger column simultaneously serves as a temporary casing to prevent possible collapse of the borehole wall. Figure 1 shows the typical components of a hollow-stem auger column. The lead end of the auger column is fitted with an auger head (i.e., cutter head) that contains replaceable teeth or blades which break up formation materials during drilling. The cuttings are carried upward by the flights which are welded onto the hollow stem. A pilot assembly, which is commonly comprised of a solid center plug and pilot bit (i.e., center head), is inserted within the hollow center of the auger head (Figure 1). The purpose of the center plug is to prevent formation materials from entering the

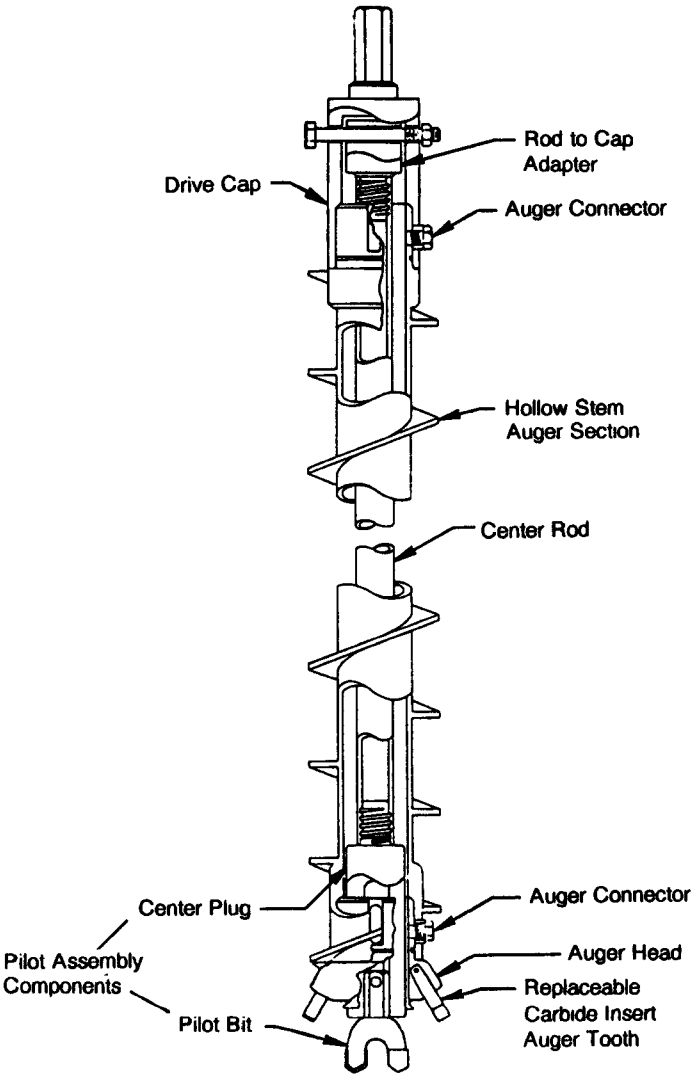

Figure 1. Typical components of a hollow-stem auger column (after Central Mine Equipment Company, 1987).

hollow stem of the lead auger, and the pilot bit assists in advancing the auger column during drilling. A center rod, which is attached to the pilot assembly, passes through the hollow axis of the auger column. Once the borehole is advanced to a desired depth for either sampling the formation or installing the monitoring well, the center rod is used to remove the pilot assembly. After a sample of the formation has been collected, the center rod is used to reinsert the pilot assembly into the auger head prior to continued drilling. The top of the center rod is attached to a drive cap (Figure 1). The drive cap is used to connect the auger column to the spindle of the drill rig. This "double adapter" drive cap ensures that the center rod and pilot assembly rotate along with the auger column.

The auger column is comprised of a series of individual hollow auger sections which are typically 5 feet in length. These individual 5-foot auger sections are joined together by either slip-fit keyed box and pin connections, slip-fit box and pin connections or threaded connections (Figure 2). The majority of hollow-stem augers have keyed, box and pin connections for transfer of drilling torque through the coupling and for easy coupling and uncoupling of the auger sections (Riggs, 1987). Box and pin connection of the connections use an auger bolt to prevent the individual auger sections from slipping apart when the auger column is axially retracted from a borehole (Figures 2a and 2b). Where contaminants are a concern at the drilling site, an o-ring may be used on the pin end of the connection to minimize the possible inflow of contaminants through the joint. Joints with o-rings will leak as the o-rings become worn and it is difficult to assess the degree of wear at each joint in the auger column when drilling. Augers with watertight threaded connections are available; however, these threaded connections commonly are used with commercial lubricants which may contain hydrocarbon or metallic based compounds. When threaded hollow-stem augers are used for the installation of water-quality monitoring wells, the manufacturer recommends that no lubricants be used on the threads (H.E. Davis, Vice President Mobile Drilling Pacific Division, personal communication, 1987). When lubricants are used on the hollow-stem auger threads, a nonreactive lubricant, such as a fluorinated based grease, may be used to avoid introducing potential contaminants that may affect the ground-water samples collected from the completed well.

The dimensions of hollow-stem auger sections and the corresponding auger head used with each lead auger section are not standardized between the various auger manufacturers. A typical range of hollow-stem auger sizes with slip-fit, box and pin connections is shown in Table 1, and the range of hollow-stem auger sizes with threaded connections is shown in Table 2. Hollow-stem auger diameters are typically referenced by the inside versus the outside (i.e., flighting) diameter. All references made to the diameter of the hollow-stem auger in this report will refer to the inside diameter, unless stated otherwise. Tables 1 and 2 also list the cutting diameter of the auger heads which are mounted on the lead augers. Common diameters of hollow-stem augers used for monitoring well construction range from 3 1/4 to 8 1/4 inches for slip-fit, box and pin connected augers and 3 3/8 to 6 inches for threaded augers.

The hollow axis of the auger column facilitates the collection of samples of unconsolidated formations, particularly in unsaturated cohesive materials. Two types of standard sam-

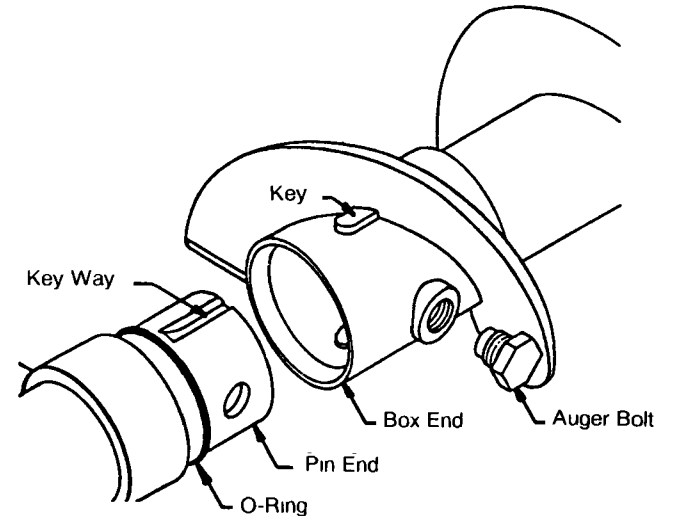

a. Keyed, Box and Pin Connection

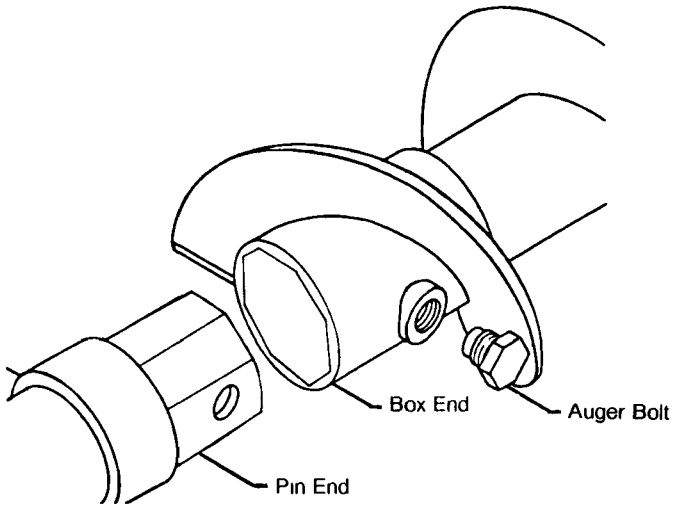

b. Box and Pin Connection

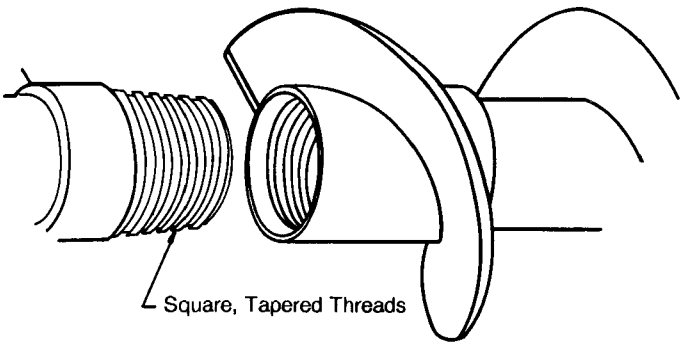

c. Threaded Connection

Figure 2. Three common methods for connecting hollow-stem auger sections.

Table 1. Typical Hollow-Stem Auger Sizes with Slip-Fit, Box and Pin Connections (from Central Mine Equipment Company, 1987)

Hollow-Stem Inside Diameter (in.)	Flighting Diameter (in.)*	Auger Head Cutting Diameter (in.)
2 1/4	5 5/8	6 1/4
2 3/4	6 1/8	6 3/4
3 1/4	6 5/8	7 1/4
3 3/4	7 1/8	7 3/4
4 1/4	7 5/8	8 1/4
6 1/4	9 5/8	10 1/4
8 1/4	11 5/8	12 1/2

* NOTE: Auger flighting diameters should be considered minimum manufacturing dimensions.

Table 2. Hollow-Stem Auger Sizes with Threaded Connections (from Mobile Drilling Company, 1982)

Hollow-Stem Inside Diameter (in.)	Flighting Diameter (in.)*	Auger Head Cutting Diameter (in.)
2 1/2	6 1/4	8
3 3/8	8 1/4	9
4	8 1/2	11
6	11	13 1/4

* NOTE: Auger flighting diameters should be considered minimum manufacturing dimensions.

plers which are used with hollow-stem augers are split barrel and thin-walled tube samplers.

Split-barrel samplers are typically driven 18 to 24 inches beyond the auger head into the formation by a hammer drop system. The split-barrel sampler is used to collect a representative sample of the formation and to measure the resistance of the formation to penetration by the sampler. The samples are used for field indentification of formation characteristics and may also be used for laboratory testing. Thin-walled tube samplers may be advanced a variable length beyond the auger head either by pushing or driving the sampler into the formation. These samplers are designed to recover relatively undisturbed samples of the formation which are commonly used for laboratory testing. Standard practices for using split-barrel samplers and thin-wall tube samplers are established under ASTM Standards D1586-84 and D1587-83, respectively. The ability of hollow-stem augers to accommodate these samplers, and thus to permit the collection of undisturbed samples of the formation, is often cited as a major advantage of the hollow-stem auger method of drilling (Minning, 1982; Richter and Collectine, 1983; Gass, 1984).

In addition to these standard samplers, continuous sampling tube systems are commercially available which permit the collection of unconsolidated formation samples as the auger column is rotated and axially advanced (Mobile Drilling Company, 1983; Central Mine Equipment Company, 1987). Continuous sampling tube systems typically use a 5-foot barrel sampler which is inserted through the auger head. The barrel sampler replaces the traditional pilot assembly during drilling; however, the sampler does not rotate with the augers. The open end of the sampler extends a short but adjustable distance beyond the auger head, and this arrangement allows sampling to occur simultaneously with the advancement of the auger column. After the auger column has advanced a distance up to 5 feet, the loaded sampler is retracted from the auger column. The loaded sampler is either immediately emptied and reinserted through the auger head or exchanged for another empty sampler. Multi-purpose drill rigs that are capable of core drilling can also use core barrels for coring either unconsolidated material or rock.

Borehole Drilling

There are several aspects of advancing a borehole with hollow-stem augers that are important considerations for groundwater monitoring. For clarity and continuity, the topic of drilling a borehole with hollow-stem augers will be presented under three subheadings: 1) general drilling considerations; 2) drilling with hollow-stem augers in the unsaturated and saturated zones; and 3) potential vertical movement of contaminants within the borehole.

General Drilling Considerations

When drilling with hollow-stem augers, the borehole is drilled by simultaneously rotating and axially advancing the auger column into unconsolidated materials or soft, poorly consolidated formations. The cutting teeth on the auger head break up the formation materials, and the rotating auger flights convey the cuttings upward to the surface. In unconsolidated materials, hollow-stem auger drilling can be relatively fast, and several hundred feet of borehole advancement per day is possible (Keely and Boateng, 1987a). Drilling may be much slower, however, in dense unconsoldiated materials and in coarse materials comprised primarily of cobbles. A major limitation of the drilling method is that the augers cannot be used to drill through consolidated rock. In unconsolidated deposits with boulders, the boulders may also cause refusal of the auger column. According to Keely and Boateng (1978a), this problem may be overcome in sediments with cobbles by removing the pilot assembly from the auger head and replacing the assembly with a small tri-cone bit. It is then possible to drill through the larger cobbles by limited rotary drilling, without the use of drilling fluids.

The depths to which a borehole may be advanced with a hollow-stem auger depend on the site hydrogeology (i.e., den-

sity of the materials penetrated and depth to water) and on the available power at the spindle of the drill rig. Riggs and Hatheway (1988) state that, as a general rule, the typical maximum drilling depth, in feet, with 3 1/4-inch to 4 1/4-inch diameter hollow-stem augers, is equivalent to the available horsepower at the drill spindle, multiplied by a factor of 1.5. This general rule on maximum drilling depths may be influenced by the types of formations being drilled. Hollow-stem augers have been used to advance boreholes to depths greater than 300 feet; however, more common depths of borehole advancement are 75 to 150 feet (Riggs and Hatheway , 1988). The United States Environmental Protection Agency (1986) generally recognizes 150 feet as the maximum drilling depth capability of hollow-stem augers in unconsolidated materials.

One significant advantage of using hollow-stem augers for ground-water monitoring applications is that the drilling method generally does not require the circulation of drilling fluid in the borehole (Scalf et al., 1981; Richter and Colletine, 1983). By eliminating or minimizing the use of drilling fluids, hollow-stem auger drilling may alleviate concerns regarding the potential impact that these fluids may have on the quality of ground-water samples collected from a completed monitoring well. Without the use of drilling fluids, the drill cuttings may also be more easily controlled. This is particularly important where the cuttings are contaminated and must be contained for protection of the drilling crew and for disposal. In addition, subsurface contaminants encountered during the drilling process are not continuously circulated throughout the borehole via a drilling fluid.

The potential for formation damage from the augers (i.e., the reduction of the hydraulic conductivity of the materials adjacent to the borehole) varies with the type of materials being drilled. In homogeneous sands and gravels, hollow-stem auger drilling may cause minimal damage to the formation. Where finer-grained deposits occur, however, smearing of silts and clays along the borehole wall is common. Keely and Boateng (1987a) indicate that interstratified clays and silts can be smeared into coarser sand and gravel deposits and can thereby alter the contribution of ground-water flow from various strata to the completed monitoring well. Smearing of silts and clays along the borehole wall may also be aggravated by certain drilling practices that are designed to ream the borehole to prevent binding of the auger column (Keely and Boateng, 1987a). These reaming techniques, which may be used after each few feet of borehole advancement, include either rotating the auger column in a stationary position or rotating the auger column while the column is alternately retracted and advanced over a short distance in the borehole.

The diameter of the borehole drilled by hollow-stem augers is influenced by the outside diameter of the auger head and auger flighting, the type of formation material being drilled and the rotation of the augers. As shown in Tables 1 and 2, the cutting diameter of the auger head is slightly larger than the corresponding outside diameter of the flighting on the hollow-stem auger. The cutting diameter of the auger head will therefore initially determine the diameter of the borehole. However, as the cuttings are conveyed up the flights during drilling, the diameter of the borehole may also be influenced by the packing of the cuttings on the borehole wall. Cuttings from cohesive formation materials with silts and clays may easily compact along the borehole wall, whereas noncohesive sands and gravels may not. Where cuttings are readily compacted on the sidewalls, the borehole diameter may reflect the outside diameter of the auger flights as opposed to the cutting diameter of the auger head. In noncohesive materials, the borehole diameter may be enlarged due to caving of the side walls. In addition, reaming techniques used to prevent binding of the auger column in the borehole often serve to enlarge the diameter of the borehole beyond the outside diameter of the the auger flights. The diameter of the borehole may also be influenced by the eccentric rotation of the augers which do not always rotate about a vertical axis. As a result of these factors, the borehole diameter may be variable over the length of the borehole.

Drilling with Hollow-Stem Augers in the Unsaturated and Saturated Zones

The drilling practices used to advance a borehole with hollow-stem augers in saturated materials and unsaturated materials are usually the same when drilling in finer-grained deposits or compacted sands and gravels. However, certain lossely compacted saturated sands, known as "heaving sands" or "sandblows," may pose a particular drilling difficulty (Minning, 1982; Perry and Hart, 1985; Keely and Boateng, 1987a). Heaving sands can necessitate changes in basic drilling equipment and changes in drilling practices. The following discussion focuses first on the drilling procedures used to advance a borehole through the unsaturated zone. These procedures are then contrasted with the drilling techniques used to advance the auger column into saturated heaving sands.

Unsaturated Zones —

When drilling in the unsaturated zone, the hollow-stem auger column is typically comprised of the components shown in Figure 1. A pilot assembly, center rod and drive cap commonly are used, and the borehole is advanced without the use of a drilling fluid. When the borehole has been advanced to a desired sampling depth, the drive cap is detached from the auger column, and the center rod and pilot assembly are removed from the hollow axis of the auger column (Figures 3a and 3b). A split barrel sampler or thin-walled tube sampler, attached to a sampling rod, is then lowered through the axis of the hollow-stem column. The sampler is advanced beyond the auger head either by driving or pressing the sampler into the formation materials (Figure 3c). The loaded sampler and sampling rod are removed from the auger column, and the pilot assembly and center rod are reinserted prior to continued drilling. When formation samples are required at frequent intervals during borehole advancement, the sequential removal and reinsertion of the pilot assembly and center rod can be time consuming. In order to minimize the time required to collect undisturbed formation samples, continuous sampling tube systems can be used to replace the traditional pilot assembly. Continuous samplers enable the collection of formation samples simultaneously with the advancement of the borehole (Figure 4). Driscoll (1986) states that the pilot assembly and center rod may be omitted when drilling through some dense formation materials because these cohesive materials usually form only a limited 2 to 4-inch thick blockage of material inside the hollow center of the auger head. Drilling with an open auger head in the unsaturated zone, however, is not a common practice and is not recommended where detailed samples of the formation are required.

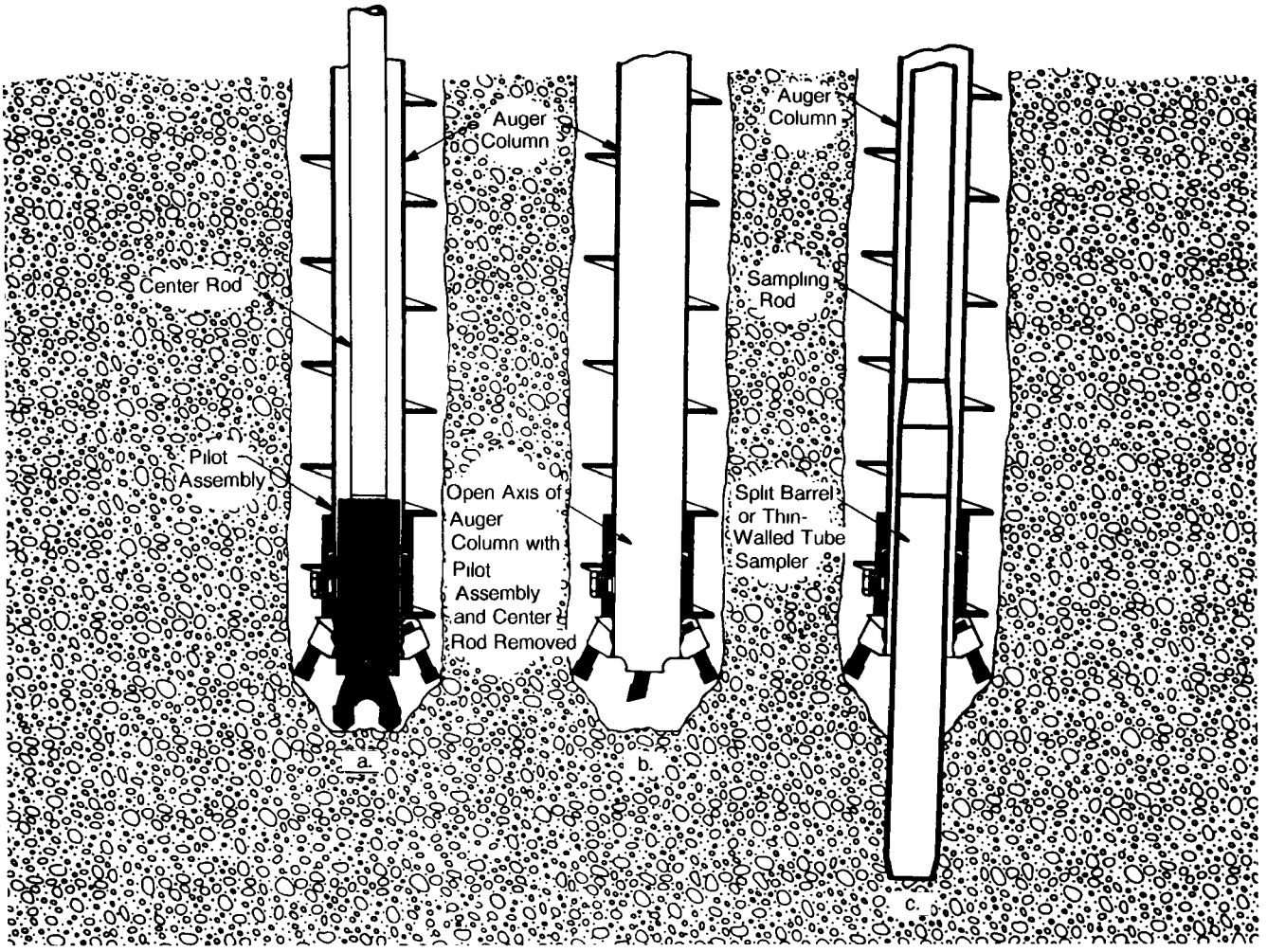

Figure 3. Sequential steps showing borehole advancement with pilot assembly and collection of a formation sample (after Riggs, 1983).

Heaving Sands —

The drilling techniques used to advance the auger column within heaving sands may vary greatly from those techniques used when drilling in unsaturated materials. The problem may occur when the borehole is advanced to a desired depth without the use of drilling fluids for the purpose of either sampling the formation or installing a monitoring well. As the pilot assembly is retracted, the hydrostatic pressure within the saturated sand forces water and loose sediments to rise inside the hollow center of the auger column (Figure 5). Keely and Boateng (1987a) report that these sediments can rise several tens of feet inside the lower auger sections. The resulting "plug" of sediment inside the hollow auger column can interfere with the collection of formation samples, the installation of the monitoring well or even additional drilling.

The difficulties with heaving sands may be overcome by maintaining a positive pressure head within the auger column. A positive pressure head can be created by adding a sufficient amount of clean water or other drilling fluid inside the hollow stem. Clean water (i.e., water which does not contain analytes of concern to a monitoring program) is usually preferred as the drilling fluid in order to minimize potential interference with samples collected from the completed well. The head of clean water inside the auger column must exceed the hydrostatic pressure within the sand formation to limit the rise of loose sediments inside the hollow-stem. Where the saturated sand formation is unconfined, the water level inside the auger column is maintained above the elevation of the water table. Where the saturated sand formation is confined, the water level inside the auger column is maintained above the potentiometric surface of the formation. If the potentiometric surface of the formation rises above the ground elevation, however, the heaving sand problem may be very difficult to counteract and may represent a limitation to the use of the drilling method.

There are several drilling techniques used to maintain a positive pressure head of clean water within the auger column. One technique involves injecting clean water through the auger column during drilling. This method usually entails removal of the pilot assembly, center rod and drive cap. A special coupling or adapter is used to connect the auger column to the spindle of

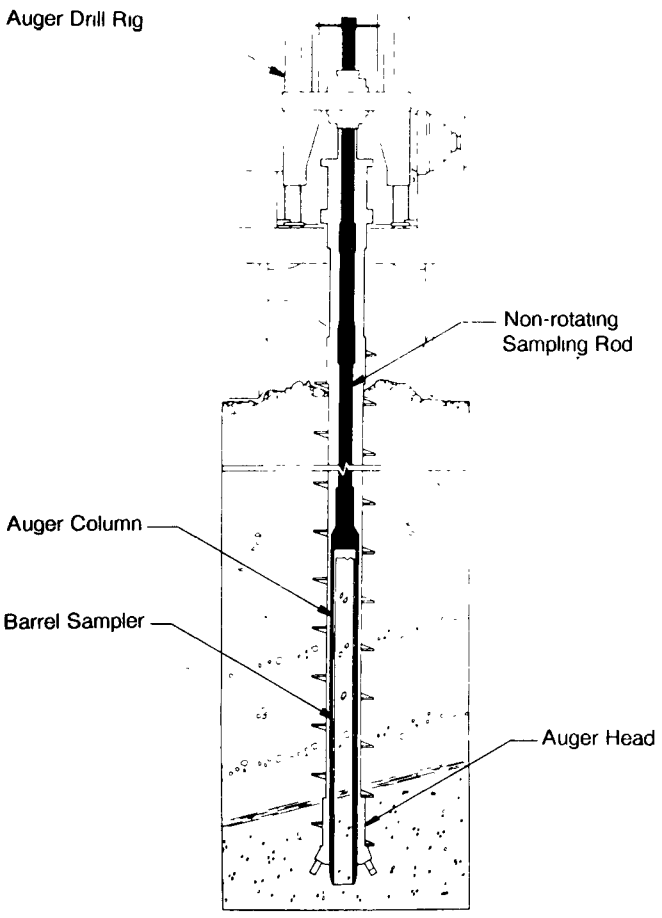

Figure 4. Diagram of continuous sampling tube sytem (after Central Mine Equipment Company, 1987).

the drilling rig. Clean water is then injected either through the hollow-center coupling or through the open spindle of the drill rig as the auger column is advanced (Figure 6). Large diameter, side-feed water swivels are also available and can be installed between the drive cap and the hex shank which connects the auger column to the spindle of the drill rig. Clean water is injected through the water swivel and into the auger column as the augers are advanced.

Another drilling technique used to overcome heaving sands is to first advance the auger column by using a "nonretrievable" knock-out plate. The knock-out plate is wedged inside the auger head and replaces the traditional pilot assembly and center rod (Figure 7a). A major disadvantage of this drilling technique is that the knock-out plate cannot be alternately removed and reinserted from the auger column to permit the collection of formation samples as the auger column is advanced. Once the auger column is advanced to a desired depth, the column is filled to a sufficient height with clean water. A ramrod commonly is used to strike and remove the knock-out plate from the auger head (Figure 7b). The head of clean water in the auger column must exceed the hydrostatic pressure in the sand formation to prevent loose sediments from rising inside the auger column once the knock-out plate is removed. The nonretrievable knock-out plate should be constructed of inert materials when drilling a borehole for the installation of a water-quality monitoring well. This will minimize concerns over the permanent presence of the knock-out plate in the bottom of the borehole and the potential effect the plate may have on ground-water samples collected from the completed well.

Reverse flight augers represent another unique center plug design which has had measured success in overcoming problems with heaving sands (C. Harris, John Mathes and Associates, personal communication, 1987). The flighting on the center plug and center rod rotates in an opposite direction from the flighting on the auger column (Figure 8). As the auger column advances through the heaving sands, the sand deposits are pushed outward from the auger head by the reverse flighting on the center plug. A sufficient head of clean water is maintained inside the auger column to counteract further the hydrostatic pressure in the heaving sand formation. Once drilling is completed, the reverse flight center plug is slowly retracted from the auger column so that movement of sand into the hollow stem is not induced.

Although the use of clean water as drilling fluid is recognized by the United States Environmental Protection Agency as a proper drilling technique to avoid heaving sand problems (United States Environmental Protection Agency, 1986), the use of any drilling fluid may be undesirable or prohibited at some ground-water monitoring sites. In these instances, the problem may be overcome by using commercial or fabricated devices that allow formation water to enter the auger column, but exclude formation sands. Perry and Hart (1985) detail the fabrication of two separate devices that allow only formation water to enter the hollow-stem augers when drilling in heaving sands. Neither one of these two devices permit the collection of formation samples as the auger column is advanced through the heaving sands. The first device consists of a slotted coupling attached to a knock-out plate (Figure 9). As the auger column advances below the water table, formation water enters the auger column through the slotted coupling (Figure 10a). When the auger column is advanced to the desired depth, a ramrod is used to dislodge the knock-out plate with slotted coupling from the auger head (Figure 10b). Perry and Hart (1985) report that the slotted coupling generally is successful in counteracting heaving sand problems. However, where clays and silts are encountered during drilling, the openings in the slotted coupling may clog and restrict formation water from entering the auger column. To overcome this plugging problem, Perry and Hart (1985) fabricated a second device to be used when the slotted coupling became plugged. The second device is actually a screened well swab (Figure 11). The swab is connected to a ramrod and is lowered through the auger column once the column is advanced to the desired depth. The ramrod is used to strike and remove the knock-out plate from the auger head (Figure 12). The screened well swab filters the sand and allows only formation water to enter the auger column (Perry and Hart, 1985). Once the water level rises inside the auger column to a height that offsets the hydrostatic pressure in the formation, the screened well swab is slowly removed so that movement of sand into the hollow stem is not induced.

Commercial devices that permit only formation water to enter the auger column during drilling are also available. These devices include a variety of patented designs, including nonwatertight flexible center plugs. These devices replace the

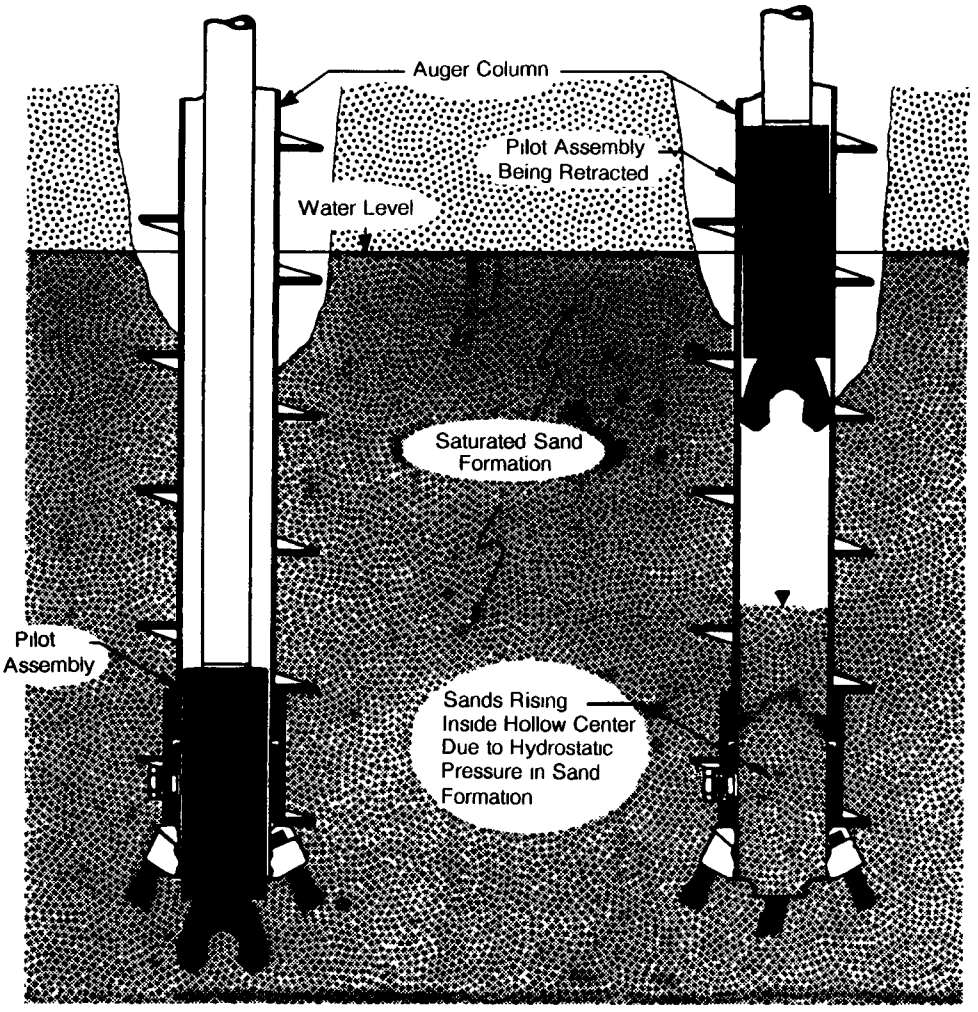

a. Borehole Advanced into Saturated Sand with Auger Column Containing Pilot Assembly

b. Movement of Loose Sands into the Hollow Center of Auger as the Pilot Assembly is Removed

Figure 5. Diagram showing heaving sand with hollow-stem auger drilling.

traditional pilot assembly in the auger head. Some flexible center plugs are seated. inside the auger head by means of a specially manufactured groove in the hollow stem. These flexible center plugs allow split-barrel samplers and thin-walled tube samplers to pass through the center plug so that samples of the water bearing sands can be collected (Figure 13). The flexible center plug, however, cannot be retracted from the auger head and therefore severely restricts the ability to install a monitoring well through the auger column. The monitoring well intake and casing can be inserted through the flexible center plug, but the plug eliminates the installation of filter pack and annular sealant (i.e., bentonite pellets) by free fall through the working space between the well casing and auger column.

Potential Vertical Movement of Contaminants Within the Borehole

The potential for contaminants to move vertically within the borehole during drilling is an important consideration when selecting a drilling method for ground-water monitoring. Vertical mixing of contaminants from different levels within a single borehole may be a problem with several different drilling methods, including hollow-stem augers. As the auger column advances through deposits which contain solid, liquid or gas-phase contaminants, there may be a potential for these contaminants to move either up or down within the borehole. Where vertical movement of contaminants occurs within the borehole, the cross contamination may be a significant source of sampling bias (Gillham et al., 1983).

Vertical movement of contaminants within the borehole may occur when contaminants from an overlying stratum are carried downward as residual material on the augers. The potential for small amounts of contaminated material to adhere to the auger head and lead auger is greatest in cohesive clayey deposits (Gillham et al., 1983). Contaminants may also adhere to split-barrel samplers and thin-walled tube samplers. If these sampling devices are not adequately cleaned between usage at successive sampling depths, contaminants from an overlying stratum may be introduced into a lower stratum via the sampling device. Where reaming techniques have enlarged the borehole beyond the outside diameter of the auger flights, contaminants

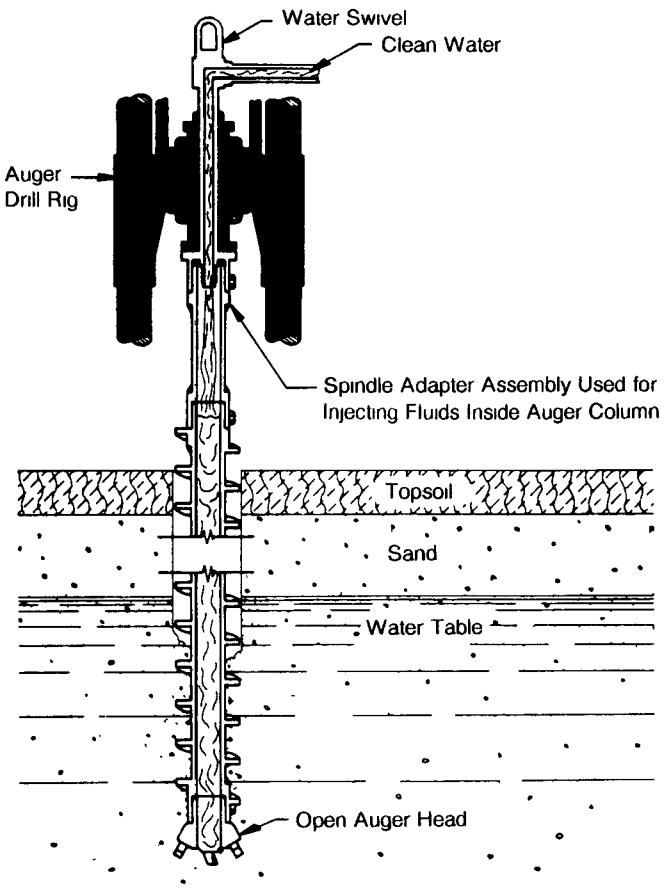

Figure 6. Injecting clean water through open drill spindle to counteract heaving sand (after Central Mine Equipment Company, 1987).

from an overlying stratum may slough, fall down the annular space and come in contact with a lower stratum (Keely and Boateng, 1987a). Even small amounts of contaminants that move downward in the borehole, particularly to the depth at which the intake of the monitoring well is to be located, may cause anomalous sampling results when analyzing samples for contaminants at very low concnetrations. According to Gillham et al. (1983), this potential for sampling bias is greatest at monitoring sites where shallow geological formations contain absorbed or immiscible-phase contaminants.

Contaminants may also move upward within a borehole during hollow-stem auger drilling. As the auger column is advanced through a stratum containing contaminants, the contaminants may be carried upward along with the cuttings. Contaminated material from a lower stratum may therefore be brought into contact with an uncontaminated overlying stratum (Keely and Boateng, 1987a). Cohesive materials within the contaminated cuttings may smear and pack the contaminants on the sidewalls. Where contaminants are displaced and smeared on the sidewall at the intended monitoring depth, these contaminants may serve as a persistent source of sampling bias.

Vertical movement of dissolved-phase contaminants within a borehole may also occcur where two or more saturated zones with different heads are penetrated by the auger column. When the water level in a contaminated, overlying saturated zone is higher than the potentiometric surface of an underlying uncontaminated zone, downward leakage of contaminated water within the borehole may occur. This downward movement of water may occur even if the augers are continually rotated in an attempt to maintain the upward movement of cuttings (Gillham et al., 1983). Conversely, the upward leakage of contaminants in the borehole may occur where the potentiometric surface of an underlying contaminated zone is higher than the water level in an overlying saturated zone.

The vertical movement of contaminants within the borehole drilled with hollow-stem augers is not well documented in the published literature. Lack of documentation is partially due to the difficulty of diagnosing the problem in the field. The determination that an aquifer was contaminated prior to drilling, during drilling or after installation of the monitoring well may not easily be made. Keely and Boateng (1987b), however, recount a case histroy in which apparent vertical movement of contaminants in the borehole occurred either during hollow-stem auger drilling and/or after installation of the monitoring well. This case study involves a site at which a heavily contaminated, unconfined clayey silt aquifer, containing hard-chrome plating wastes, is underlain by a permeable, confined sand and gravel aquifer. Water samples collected from monitoring wells developed in the lower aquifer showed anomalous concentrations for chromium. Although vertical ground-water gradients at the site were generally downward, the areal distribution and concentrations of chromium in the lower aquifer were not indicative of long-term leakage through the aquitard. Based on their investigation of the site, Keely and Boateng (1987b) conclude that the localized pattern of chromium values in the lower aquifer resulted from either vertical movement of contaminants in the borehole or vertical movement of contaminants through faulty seals along the casing of the monitoring wells. The authors hypothesize that the vertical movement of the contaminants in the borehole may have occurred when contaminated solids from the upper aquifer fell down the annular space during hollow-stem auger drilling.

The potential for cross contamination during drilling may be reduced if contamination is known or suspected at a site. Where a shallow contaminated zone must be penetrated to monitor ground-water quality at greater depths, a large-diameter surface casing may be used to seal off the upper contaminated zone before deeper drilling is attempted. Conventional hollow-stem auger drilling alone, however, may not always be adequate for installation of a larger diameter surface casing. Depending on the hydrogeological conditions at the site, a "hybrid" drilling method may be necessary in which conventional hollow-stem auger drilling is combined with a casing driving technique that advances the surface casing as the borehole is advanced. Driving techniques used to advance and install surface casing may include conventional cable tool drilling, rotary drilling with casing hammer or a drop hammer system on an auger drill rig.

Conventional hollow-stem auger drilling may be used to set protective surface casing where the shallow geological formations are comprised of cohesive materials. In this situation, a large-diameter borehole may be advanced by the auger column to a depth below the known contamination (Figure 14a). The auger column is then fully retracted from the borehole at sites where the borehole will remain open due to the cohesiveness of the formation (Figure 14b). A large-diameter surface

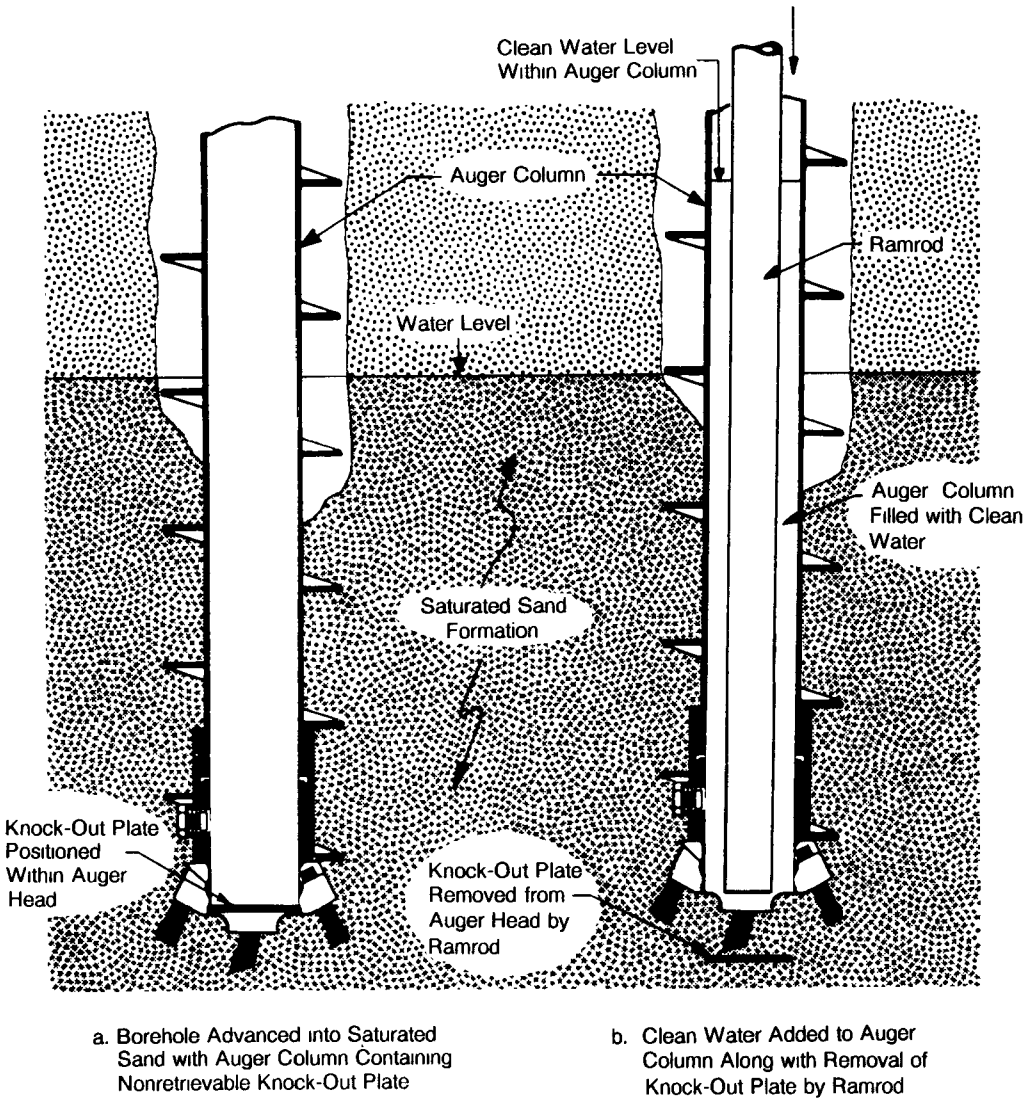

Figure 7. Use of a nonretrievable knock-out plate and auger column filled with clean water to avoid a heaving sand problem.

casing is then set and grouted into place. After grouting the large-diameter surface casing into place a hollow-stem auger column of smaller outside diamteter is used to advance the borehole to the desired depth for installation of the monitoring well (Figure 14c). Typical dimensions for augers used in this scenario might be an 8 1/4-inch diameter hollow-stem auger with an auger head cutting diameter of 12 1/2 inches to advance the borehole below the contaminated zone. A nominal 10-inch diameter surface casing would commonly be installed within the 12 1/2-inch diameter borehole. Four-and-one-quarter-inch diameter augers with an eight-and-one-quarter-inch auger head cutting diameter might then be used to continue drilling after the surface casing is set.

When the shallow geological formations are comprised of noncohesive materials and the borehole will not stand open, a hybrid drilling technique can be used in which the surface casing is advanced simultaneously with the auger column. According to Keely and Boateng (1987a), this alternate drilling technique is used to advance the auger column a few feet at a time and then to drive the surface casing to the new borehole depth. The auger column is telescoped inside the surface casing as the casing is driven outside the augers (Figure 15). Five-foot lengths of casing typically are used with this technique, and the casing is driven either by using the same conventional 140-pound drop hammer that is used to advance split-barrel samplers or a heavier 300-pound drop hammer. The sequential steps of augering and casing advancement continue until the surface casing extends below the depth of known contamination. Once the surface casing is set, a smaller diameter hollow-stem auger column can be used to advance the borehole to the desired depth for monitoring well installation.

Monitoring Well Installation

Monitoring wells may be constructed for water-quality sampling, water-level measurement or both. The intended purpose of the well influences the design components of a monitoring well. The following discussion will focus on techniques used to install water-quality monitoring wells which consist of a well casing and intake, filter pack and annular seal.

The methods used to construct water-quality monitoring wells with hollow-stem augers depend primarily on site hydrogeology. In particular, the cohesiveness of the formation

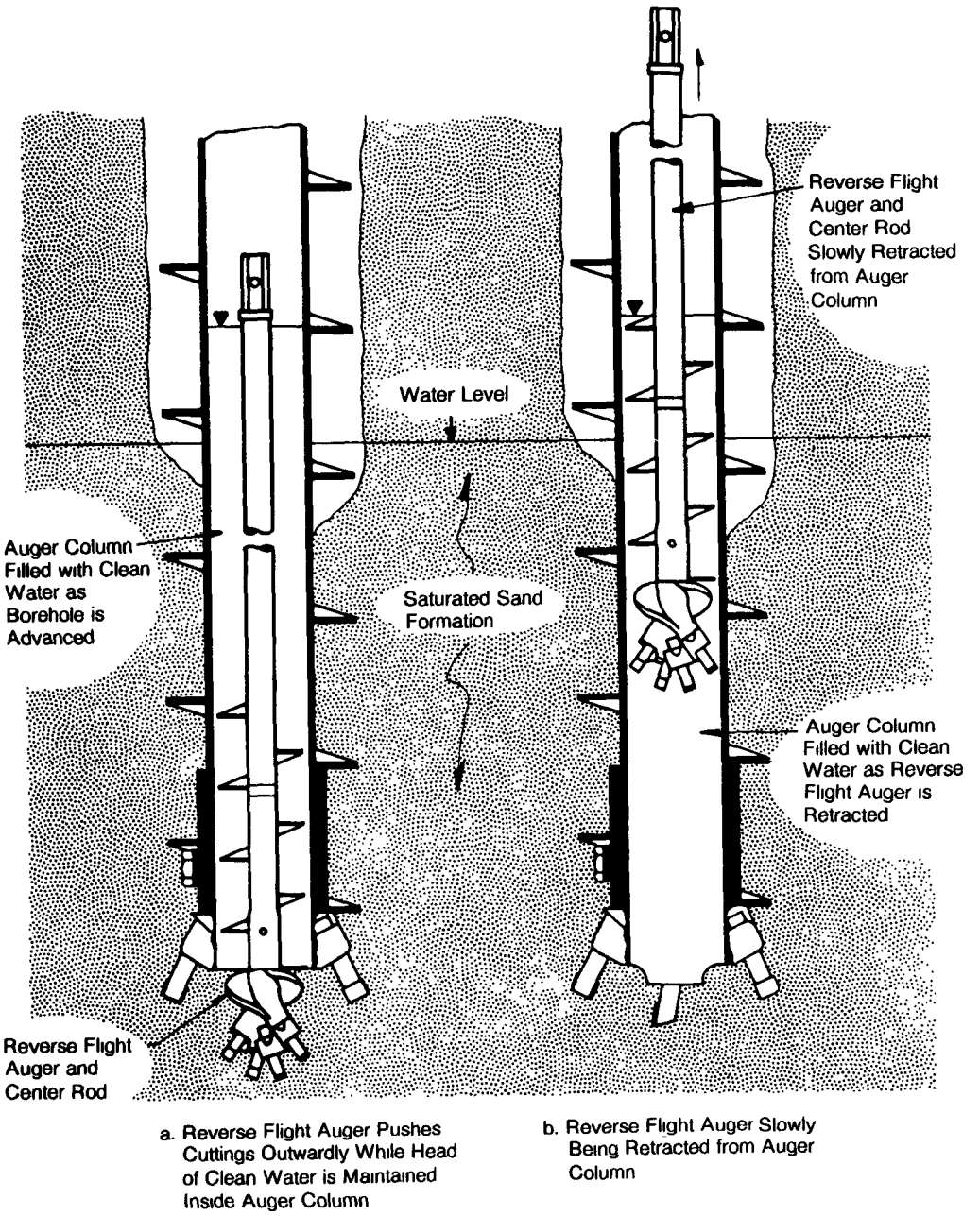

Figure 8. Use of a reverse flight auger to avoid a heaving sand problem (after Central Mine Equipment Company, 1987).

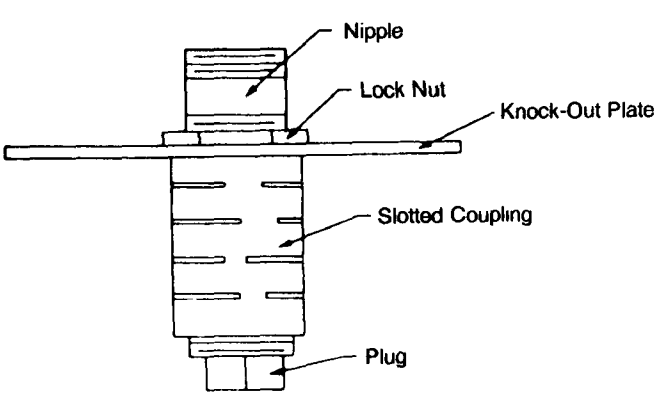

Figure 9. Diagram of a slotted coupling (after Perry and Hart, 1985).

materials penetrated by the auger column may influence the well construction practices used. If the formation materials are cohesive enough so that the borehole remains open, the entire auger column may be retracted from the borehole prior to the installation of the monitoring well casing and intake, filter pack and annular seal. However, even in cohesive formation materials, drillers may refrain from the practice of fully retracting the auger column from a completed borehole to avoid unexpected caving of the borehole. The string of well casing and attached intake may be centered in the open borehole by using casing centralizers. The filter pack and annular sealant can then be emplaced through the working annular space between the borehole and well casing.

When the auger column penetrates noncohesive materials and the borehole will not remain open, the auger column is used as a temporary casing during well construction to prevent the

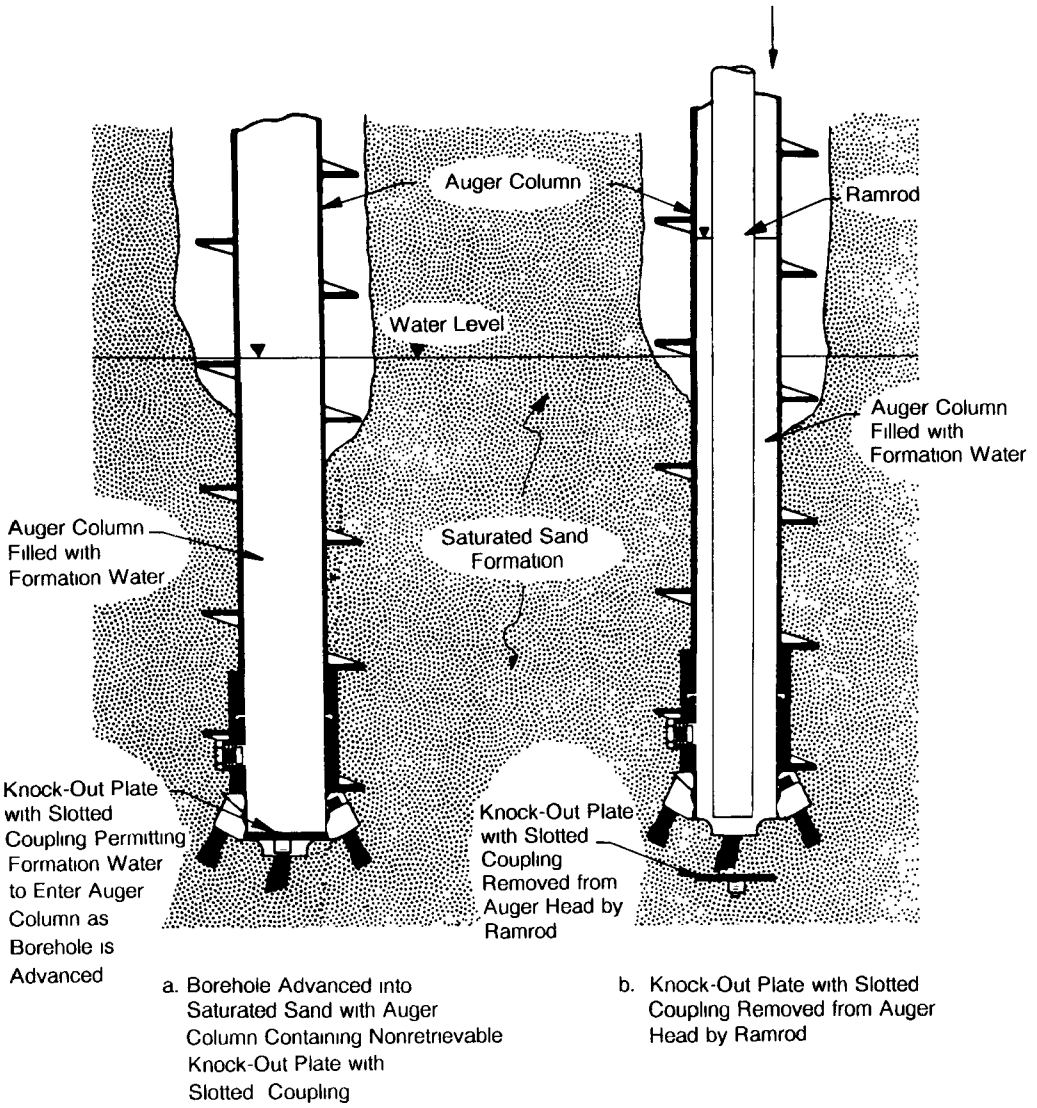

Figure 10. Use of a nonretrievable knock-out plate with a slotted coupling to avoid a heaving sand problem (after Perry and Hart, 1985).

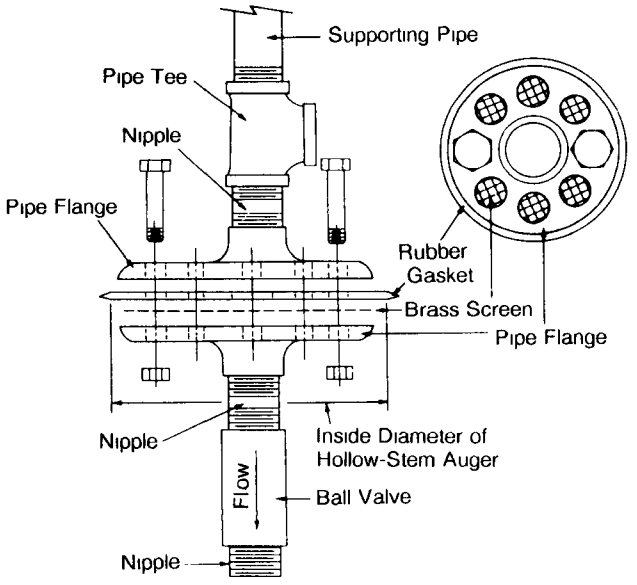

Figure 11. Diagram of a screened well swab (after Perry and Hart, 1985).

possible collapse of the borehole wall. When the auger column is used as a temporary casing during well construction, the hollow axis of the auger column facilitates the installation of the monitoring well casing and intake, filter pack and annular sealant. However, the practices that are used to emplace these well construction materials through the working space inside the hollow-stem augers are not standardized among contractors. Lack of standardization has resulted in concerns about the proper emplacement of the filter pack and annular seal in the monitoring well. To address these concerns, the topic of monitoring well construction through hollow-stem augers is presented in three separate discussions: 1) well casing diameter versus inside diameter of the hollow-stem auger; 2) installation of the filter pack; and 3) installation of the annular seal.

Well Casing Diameter Versus Inside Diameter of the Hollow-Stem Auger

Once the borehole has been advanced to the desired depth for installation of the monitoring well, the pilot assembly and center rod (if used) are removed, and the depth of the borehole is measured. A measuring rod or weighted measuring tape is lowered through the hollow axis of the auger column. This depth measurement is compared to the total length of the auger

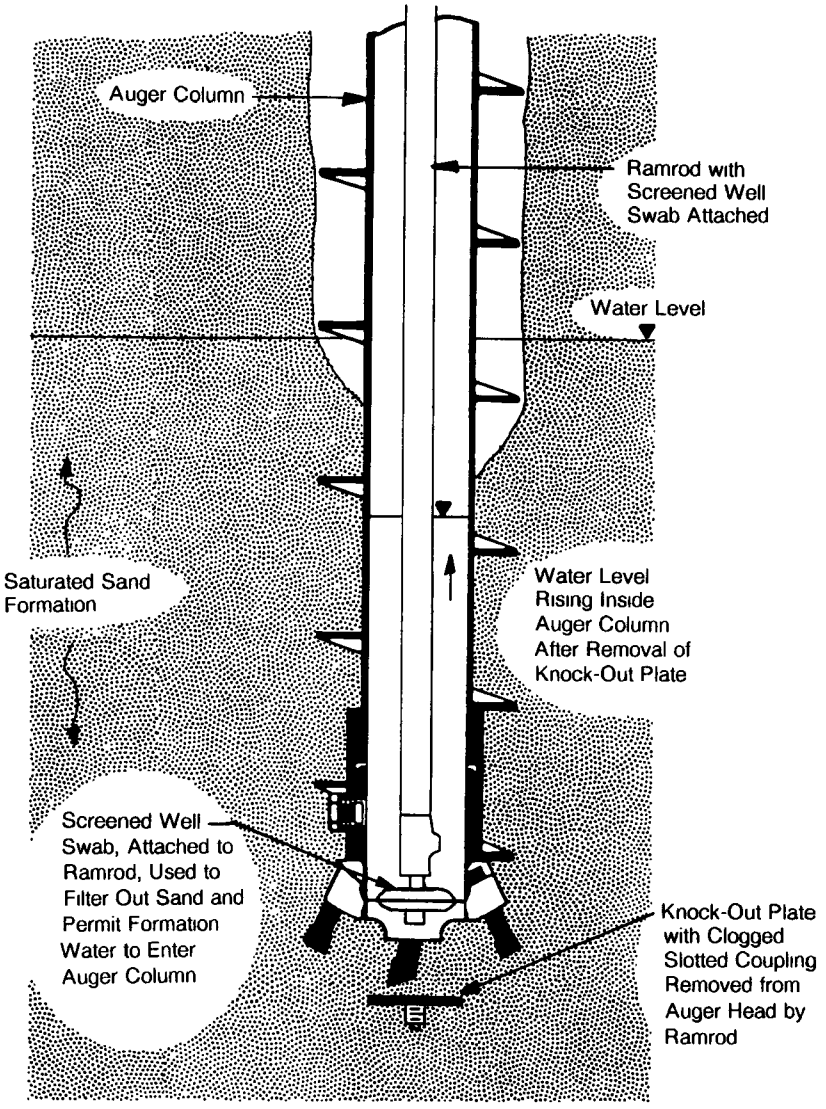

Figure 12. Use of a screened well swab to avoid a heaving sand problem (after Perry and Hart, 1985).

column in the borehole to determine whether loose sediments have risen inside the hollow stem. Provided that the hollow stem is clear of sediment, a string of well casing with attached intake is lowered inside the auger column. Threaded, flush-joint casing and intake are commonly used to provide a string of casing with a uniform outside and inside diameter.

Although the well casing and intake may be centered inside the auger column, many contractors place the well casing and intake toward one side of the inner hollow-stem wall (Figure 17). The eccentric placement of the casing and intake within the hollow-stem auger is designed to create a maximum amount of working space (shown by the distance "A" in Figure 17) between the outer wall of the casing and the inner wall of the auger. This working space is used to convey and emplace the filter pack and the annular sealant through the auger column. Table 3 lists the maximum working space (A) that is available between various diameters of threaded, flush-joint casing and hollow-stem augers, if the casing is set toward one side of the inner hollow-stem wall.

The selection of an appropriate sized hollow-stem auger for drilling and monitoring-well construction should take into account the nominal diameter of the well casing to be installed and the working space needed to properly convey and emplace the filter pack and annular sealant. The smallest hollow-stem augers typically used for installing 2-inch nominal diameter casing are 3 1/4-inch diameter augers; the smallest hollow-stem augers typically used for installing 4-inch nominal diameter casing are 6 1/4-inch diameter augers (Riggs and Hatheway, 1988). Table 3 shows, however, that the maximum working space available between a 2-inch nominal diameter casing and a 3 1/4-inch diameter hollow-stem auger is less than 1 inch (i.e., 0.875 inch). This small working space can make the proper emplacement of the filter pack and annular seal very difficult, if not impossible. Too small a working space can either restrict the use of equipment (i.e., tremie pipe) that may be necessary for the placement of the filter pack and annular seal or inhibit the ability to properly measure the actual emplacement of these materials in the borehole. A small working space can also increase the possibility of bridging problems when attempting to convey the filter pack and annular sealant between the hollow-stem auger and well casing. Bridging occurs when the filter pack or annular seal material spans or arches across the

Table 3. Maximum Working Space Available Between Various Diameters of Threaded, Flush-Joint Casing and Hollow-Stem Augers

Nominal Diameter of Casing (in.)	Outside Diameter of Casing *(in.)	Working Space "A" (see Figure 17) for Various Inside Diameter Hollow-Stem Augers ** (in.)				
		3 1/4	3 3/4	4 1/4	6 1/4	8 1/4
2	2.375	0 875	1.375	1.875	3.875	5.815
3	3.500	—	0.250	0.750	2.750	4.750
4	4.500	—	—	—	1.750	3.750
5	5.563	—	—	—	0.687	2.687
6	6.625	—	—	—	—	1.625

* Based on ASTM Standards D-1785 and F-480
** Inside diameters of hollow-stem augers taken from Table 1.

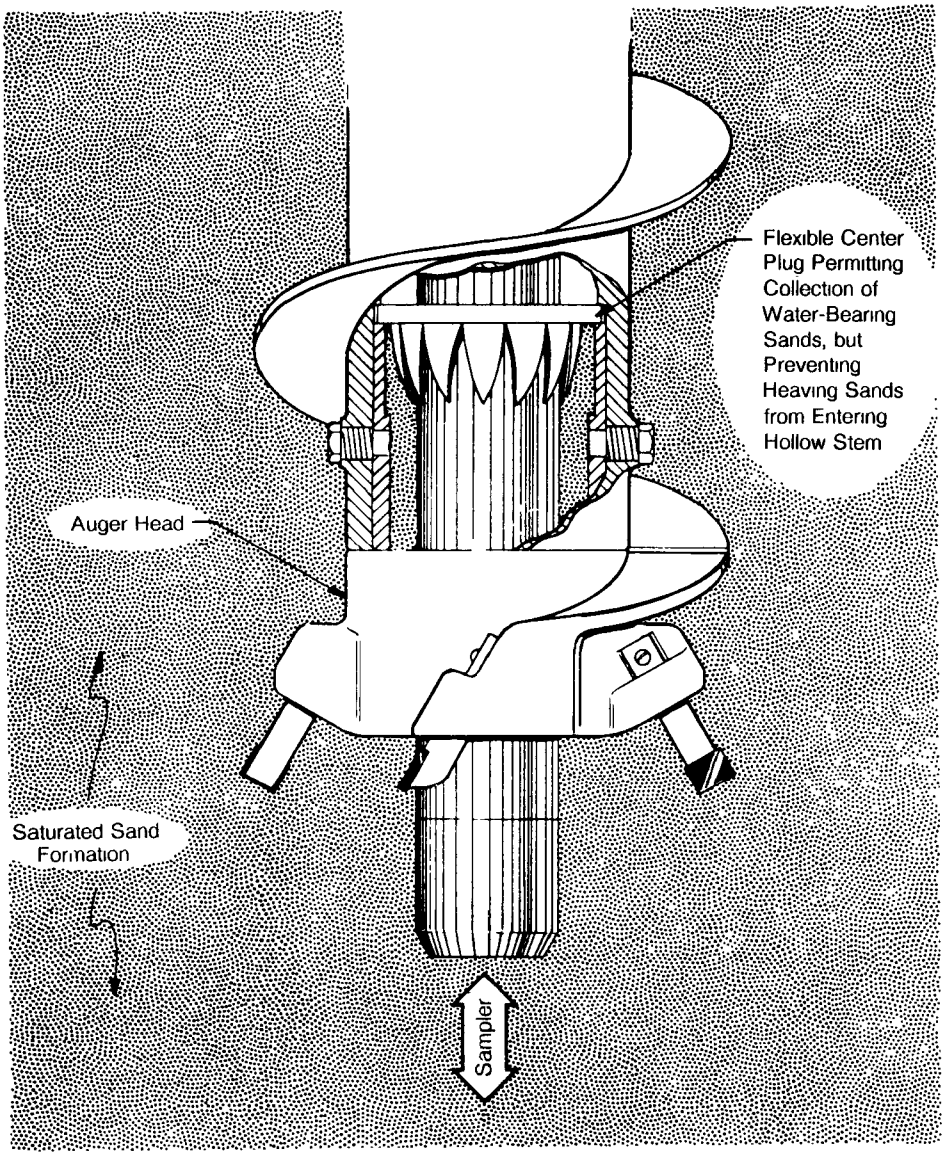

Figure 13. Flexible center plug in an auger head used to overcome heaving sands and permit sampling of formation materials (after Diedrich Drilling Equipment, 1986).

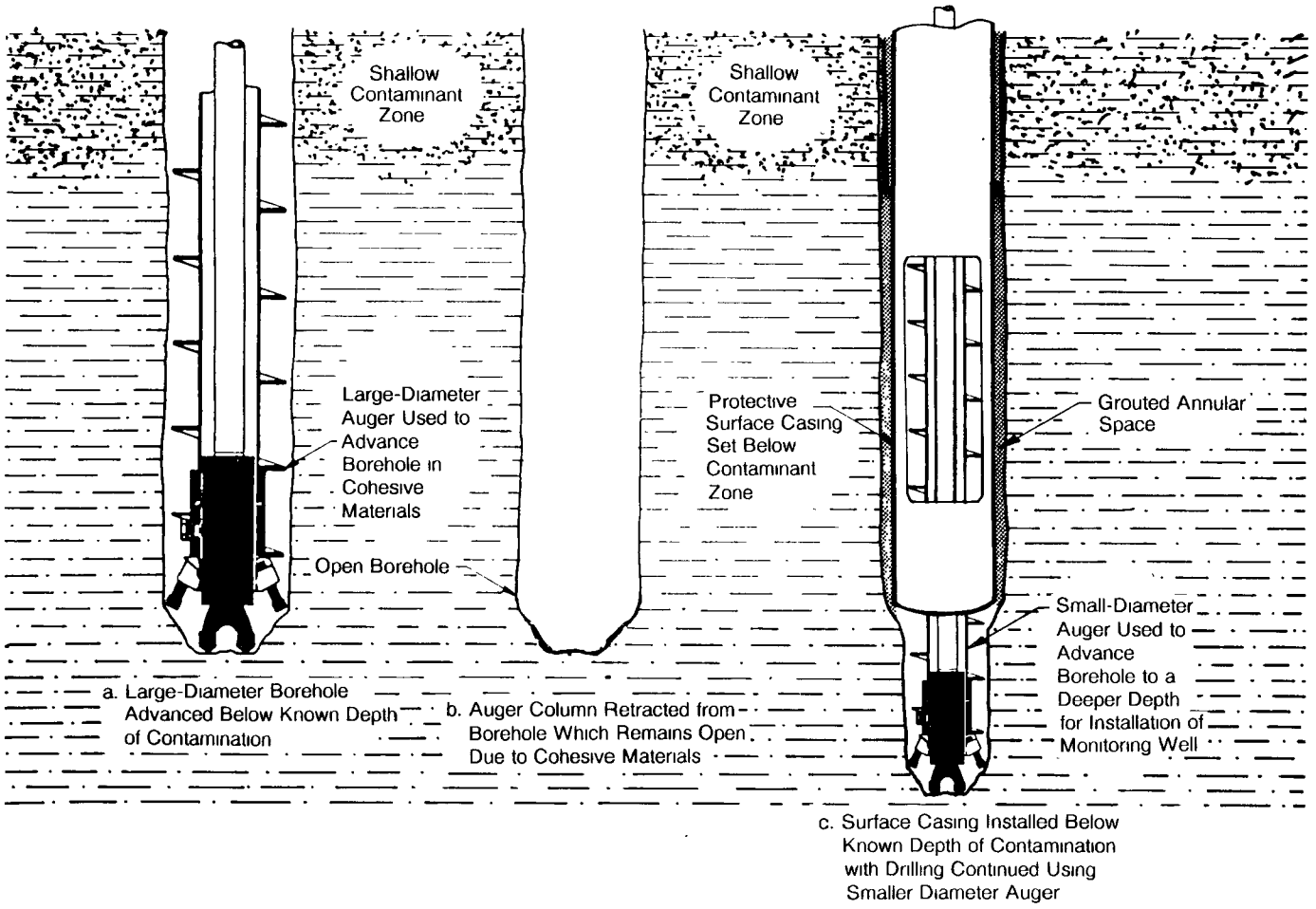

Figure 14. Sequence showing the installation of protective surface casing through a shallow contaminated zone in a cohesive formation.

space between the inner diameter of the auger and the outer diameter of the casing. The bridge of filter pack or annular seal material forms a barrier which blocks the downward movement of additional material through the working space. As a result, gaps or large unfilled voids may occur around the well intake or well casing due to the nonuniform placement of the filter pack or annular seal. Bridged material can lock the casing due to the nonuniform placement of the filter pack or annular seal. Bridged material can lock the casing and auger together and result in the well casing being retracted from the borehole along with the augers. Most contractors prefer to use 4 1/4-inch diameter augers to install 2-inch nominal diameter casing, and 8 1/4-inch diameter augers to install 4-inch nominal diameter casing to create an adequate working space that facilitates the proper emplacement of the filter pack and annular seal (C. Harris, John Mathes and Associates, personal communication, 1987). According to United States Environmental Protection Agency (1986), the inner diameter of the auger should be 3 to 5 inches greater than the outer diameter of the well casing for effective placement of the filter pack and annular sealant. Based on the United Sates Environmental Protection Agency guideline for effective working space, 6 1/4-inch diameter hollow-stem augers would be the recommended minimum size auger for installing a 2-inch nominal diameter casing. In addition, the maximum diameter of a well which could be installed through the hollow axis of the larger diameter augers, which are commonly available at this time, would be limited to 4 inches or less.

Installation of the Filter Pack

After the well casing and intake are inserted through the hollow axis of the auger column, the next phase of monitoring well construction commonly involves the installation of a filter pack. The filter pack is a specially sized and graded, rounded, clean silica sand which is emplaced in the annular space between the well intake and borehole wall (Figure 16).

The primary purpose of the filter pack is to filter out finer-sized particles from the formation materials adjacent to the well intake. The filter pack also stabilizes the formation materials and thereby minimizes settlement of materials above the well intake. The appropriate grain size for the filter pack is usually selected based on a sieve analysis of the formation material adjacent to the well intake. The filter pack is usually a uniform, well-sorted coarse to medium sand (i.e., 5.0 mm to 0.40 mm). However, graded filter packs may be used in a monitoring well which has an intake installed in a fine-grained formation. The graded filter pack may filter and stabilize silt and clay-sized formation particles more effectively. The completion of a

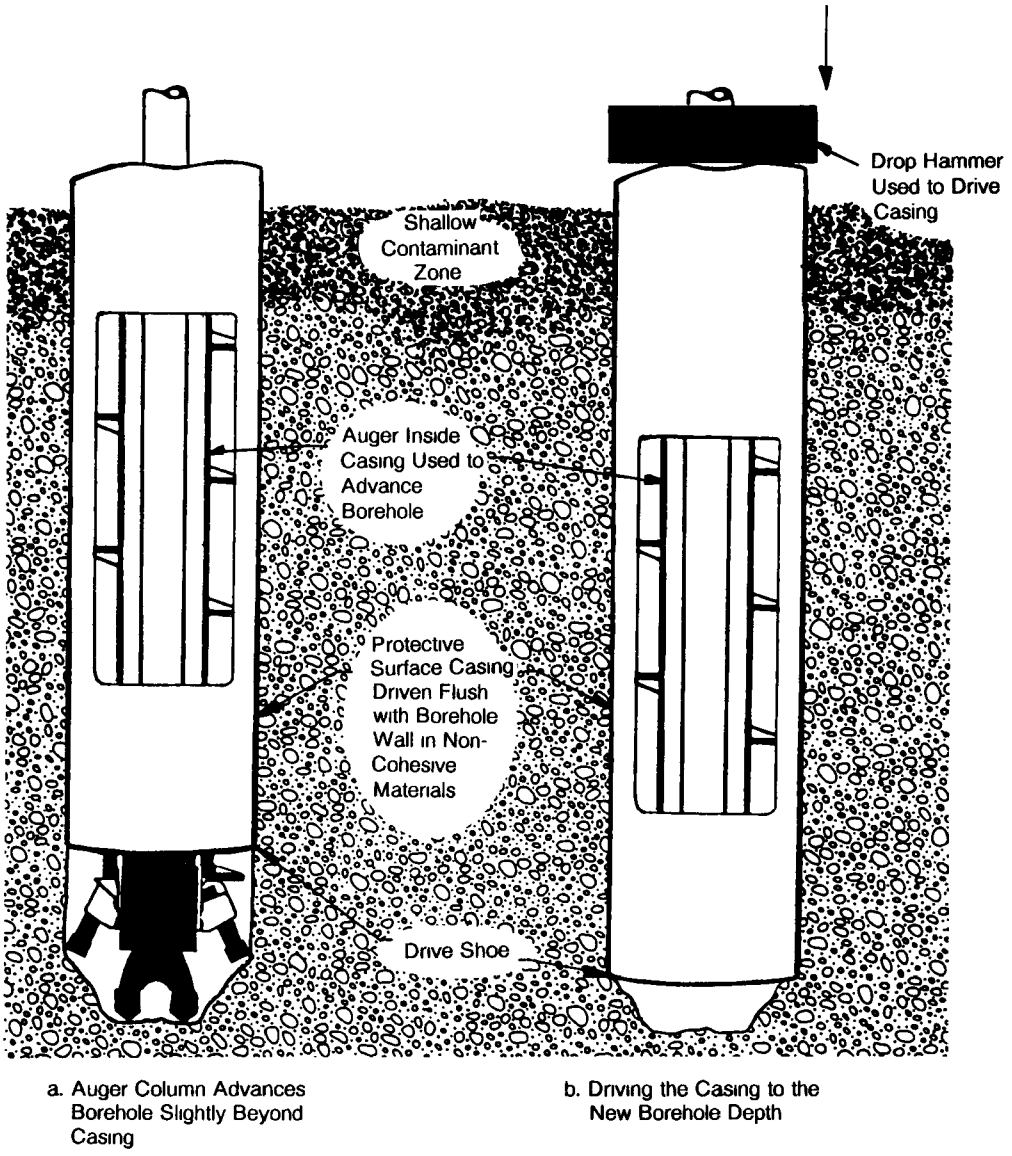

Figure 15. Sequence showing the installation of protective surface casing through a shallow contaminated zone in a noncohesive formation (after Keely and Boateng, 1987a).

monitoring well with a properly sized, graded and emplaced filter pack minimizes the extent to which the monitoring well will produce water samples with suspended sediments.

The filter pack typically extends from the bottom of the well intake to a point above the top of the intake (Figure 16). The filter pack is extended above the top of the well intake to allow for any settlement of the filter pack that may occur during well development and to provide an adequate distance between the well intake and the annular seal. As a general rule, the length of the filter pack is 10 percent greater than the length of the intake to compensate for settlement. United States Environmental Protection Agency (1986) recommends that the filter pack extend from the bottom of the well intake to a maximum height of 2 feet above the top of the intake, with the maximum height specified to ensure discrete sample horizons.

The thickness of the filter pack between the well intake and borehole wall generally will not be uniform because the well casing and intake usually are not centered in the hollow axis of the auger column. The filter pack, however, should be at least thick enough to completely surround the well intake. Tables 1 and 2 show that the cutting diameter of the auger head ranges from 4 to 7 1/4 inches larger than the inside diameter of the hollow-stem auger. When the well casing and intake are positioned toward one side of the inner hollow-stem wall (Figure 17), the annular space between the well intake and borehole wall may be as small as 2 to 3 5/8 inches. This annular space may still be adequate to preclude bridging and irregular emplacement of the filter pack; however, there is marginal tolerance for borehole sloughing or installation error. The proper installation of a filter pack with hollow-stem augers can be difficult if there is an inadequate working space between the casing and the auger column through which the filter pack is conveyed (Minning, 1982; Richter and Collentine, 1983; Gass, 1984; Schmidt, 1986; Keely and Boateng, 1987b).

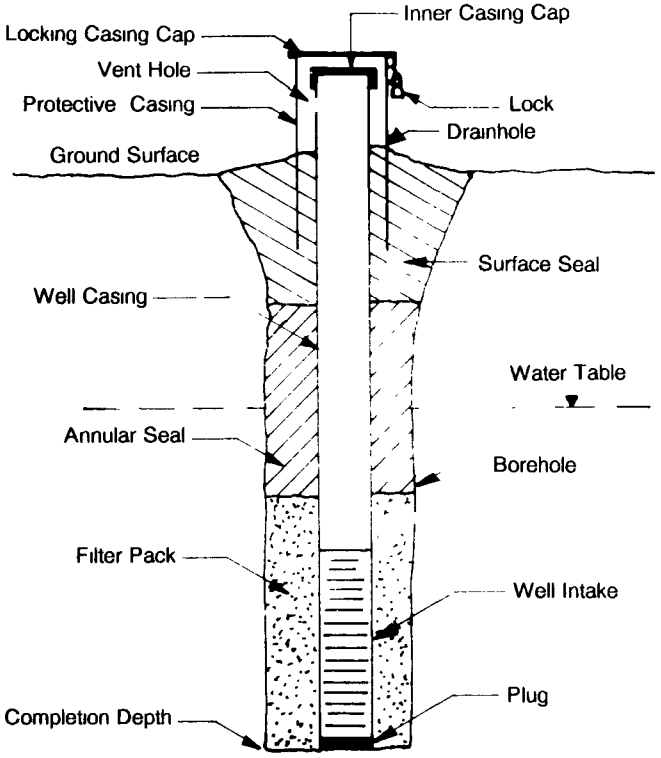

Figure 16. Typical design components of a ground-water monitoring well.

The volume of filter pack required to fill the annular space between the well intake and borehole wall should be predetermined prior to the emplacement of the filter pack. In order to determine the volume of filter pack needed, three design criteria should be known. These three criteria include: 1) the design length of the filter pack; 2) the diameter of the borehole; and 3) the outside diameter of the well intake and casing. This information is used to calculate both the volume of the borehole and the volume of the well intake and casing over the intended length of the filter pack. Once both volumes are calculated, the volume of the well intake and casing is subtracted from the volume of the borehole to determine the volume of filter pack needed to fill the annular space between the well intake and borehole wall. For example, Figure 18 illustrates a 2-inch nominal diameter well casing and intake inserted through the hollow axis of a 4 1/4-inch diameter hollow-stem auger. Based on the cutting diameter of the auger head, the diameter of the borehole is shown as 8 1/4 inches and the length of the well intake is 10 feet. The design length of the filter pack is 12 feet to ensure that the filter pack extends 2 feet above the top of the intake. The volume of the borehole over the 12 foot design length of the filter pack will be 4.36 cubic feet. Using 2.375 inches as the outside diameter of the well intake and casing, the volume of the intake and casing over the 12-foot design length of the filter pack will be 0.38 cubic feet. By subtracting 0.38 cubic feet from 4.36 cubic feet, the volume of filter pack needed to fill the annular space is determined to be 3.98 or approximately 4 cubic feet.

Once the theoretical volume of filter pack is calculated, this volume is divided by the design length of the filter pack to determine the amount of the material which should be needed to fill the annulus for each lineal foot that the auger column is retracted. Referring again to the example illustrated in Figure 18, 4 cubic feet divided by 12 feet would equal approximately one-third cubic foot per foot. Therefore, for each foot that the auger column is retracted, one-third cubic foot of filter pack should be needed to fill the annular space between the well intake and borehole wall.

The methods which are used to convey the filter pack through the working space in the auger column and to emplace this material in the annular space between the well intake and borehole wall depend on: 1) the cohesiveness of the formation materials; 2) the height of a standing water column in the working space between the casing and augers; and 3) the grain-size and uniformity coefficient of the filter pack.

In cohesive formation materials in which the borehole stands open, the filter pack commonly is emplaced by axially retracting the auger column from the borehole in short increments and pouring the filter pack down the working space between the casing and auger column. Prior to filter pack emplacement, a measuring rod or weighted measuring tape is lowered to the bottom of the borehole through the working space between the well casing and auger column (Figure 19a) so that the total depth of the borehole can be measured and recorded. The auger column is initially retracted 1 or 2 feet from the borehole (Figure 19b). A measured portion of the precalculated volume of the filter pack is slowly poured down the working space between the well casing and auger column (Figure 19c). The filter pack is typically poured at a point diametrically opposite from the measuring rod or weighted measuring tape. As the filter pack is being poured, the measuring device is alternately raised and lowered to "feel" and measure the actual placement of the filter pack. If a weighted measuring tape is used as the measuring device, the tape is kept in constant motion to minimize potential binding and loss of the weighted tape as the filter pack is being poured. Continuous measurements of the depth to the top of the emplaced filter pack are usually made as the filter pack is slowly poured down the working space in order to avoid allowing the emplaced filter pack to rise up between the well intake/casing and the inside of the hollow-stem auger. If the filter pack is permitted to rise up between the casing and auger, the filter pack may lock the casing and auger together and result in the casing being retracted from the borehole along with the augers. Once the filter pack is emplaced to the bottom of the auger column, the augers are retracted another 1 to 2 feet and a second measured portion of the filter pack is added. These steps are repeated until the required length of filter pack is emplaced. By knowing the theoretical amount of filter pack needed to fill the annular space between the well intake and borehole wall for each increment in which the auger column is retracted, the emplacement of the filter pack may be closely monitored. Calculations of the "filter pack needed" versus "filter pack used" should be made and recorded for each increment that the auger column is retracted. Any discrepancies should be explained.

Placement of filter pack by free fall through the working space between well casing and auger column can present the potential for bridging or segregation of the filter pack material. As described earlier, bridging can result in unfilled voids within the filter pack or in the failure of the filter pack materials to be properly conveyed through the working space between the well casing and auger column. Bridging problems, however, may be minimized by: 1) an adequately sized working space between the well casing and auger column; 2) slowly adding the filter

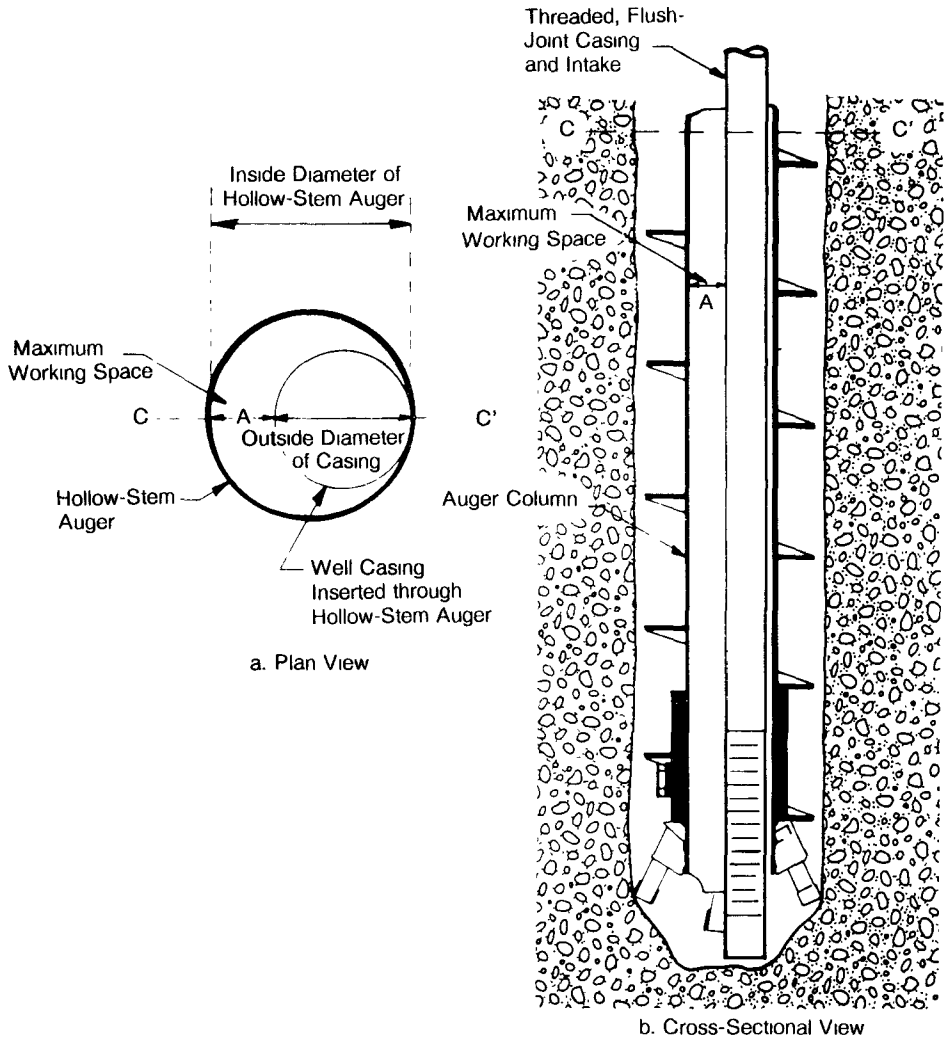

Figure 17. Plan and cross-sectional views showing the maximum working space (A) between the well casing and the hollow-stem auger.

pack in small amounts; and 3) carefully raising and lowering the measuring rod or weighted measuring tape while the filter pack is being added.

Segregation of graded filter pack material during free fall through the working space between the well casing and auger column may still occur, especially where the static water level between the casing and augers is shallow. As the sand-sized particles fall through the standing column of water, a greater drag is exerted on the smaller sand-sized particles due to the higher surface area-to-weight ratio. As a result, coarser particles fall more quickly through the column of water and reach the annular space between the well intake and borehole wall first. The coarser particles may therefore comprise the bottom portion of the filter pack, and the smaller-sized particles may comprise the upper portion of each segment of filter pack emplaced. Driscoll (1986) states that segregation may not be a significant problem when emplacing uniform grain size, well-sorted filter packs with a uniformity coefficient of 2.5 or less. However, graded filter packs are more susceptible to segregation problems, and this could result in the well consistently producing water samples with suspended sediment.

Potential bridging problems or segregation of graded filter packs may be minimized by using a tremie pipe to convey and emplace the filter pack. The use of a tremie pipe may be particularly important where the static water level between the well casing and auger column is shallow. Schmidt (1986) has suggested that at depths greater than 50 feet, a tremie pipe should be used to convey and emplace filter pack through hollow-stem augers. A tremie pipe is a hollow, thin-walled, rigid tube or pipe which is commonly fabricated by connecting individual lengths of threaded, flush-joint pipe. The tremie pipe should have a sufficient diameter to allow passage of the filter pack through the pipe. The inside diameter of a tremie pipe used for filter pack emplacement is typically 1 1/2 inches or greater to minimize potential bridging problems inside the tremie.

Emplacement of the filter pack begins by lowering a measuring rod or weighted measuring tape to the bottom of the borehole, as previously described in the free fall method of filter pack emplacement. The auger column commonly is retracted 1 to 2 feet, and the tremie pipe is lowered to the bottom of the borehole through the working space between the well casing and auger column (Figure 20a). A measured portion of the precalculated volume of filter pack is slowly poured down the tremie and the tremie is slowly raised as the filter pack discharges from the bottom of the pipe, filling the annular space between the well intake and borehole wall (Figure 20b). Once the filter pack is emplaced to the bottom of the auger

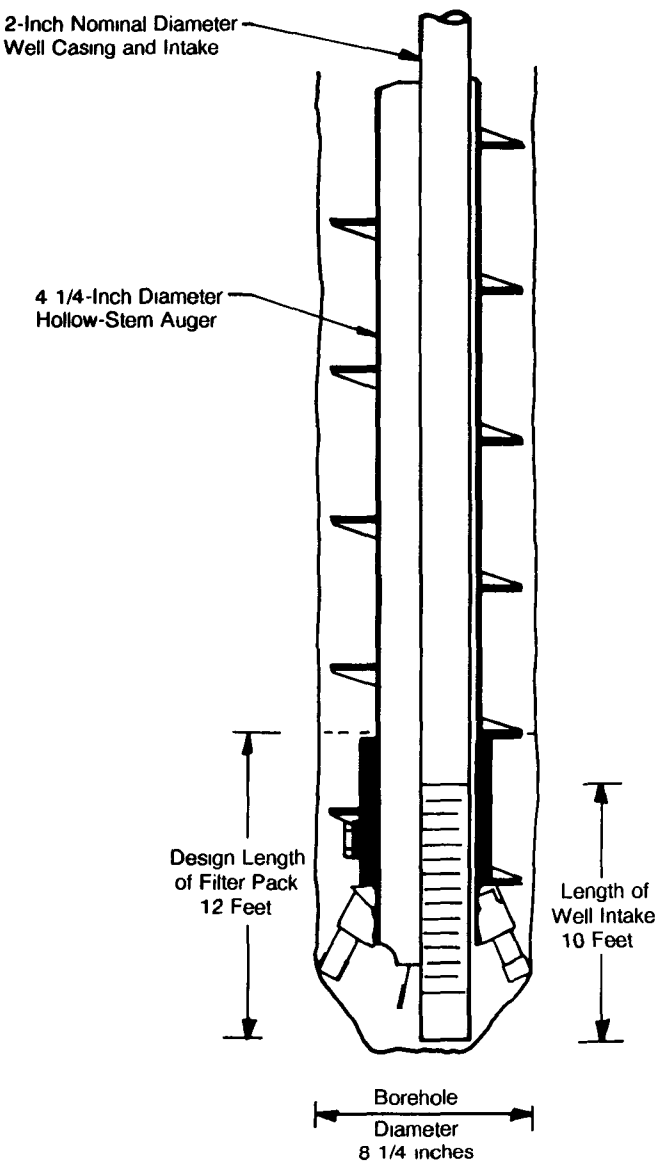

Figure 18. Illustration for the sample calculation of a filter pack as described in the text.

column, the augers are retracted another 1 to 2 feet and a second measured portion of the filter pack is added through the tremie pipe. This alternating sequence of auger column retraction followed by addtional filter pack emplacement is continued until the required length of filter pack is installed. Similar to the free fall method of filter pack emplacement, careful measurements usually are taken and recorded for each increment of filter pack which is added and emplaced.

During filter pack emplacement, whether by free fall or tremie methods, the auger column may be retracted from the borehole in one of two ways (C. Harris, John Mathes and Associates, personal communication, 1987). One method of retracting the augers is to use the drive cap to connect the auger column to the drill head. The drill head then pulls back the auger column from the borehole. This technique, however, commonly requires the measuring rod, weighted measuring tape or tremie pipe (if used) to be removed from the working space between the wall casing and auger column each time the auger column is retracted. A second method of retracting the augers is to hook a winch line onto the outside of the open top of the auger column. The winch line is then used to pull the augers back. The use of a winch line to pull the auger column from the borehole enables the measuring rod, weighted measuring tape or tremie pipe to remain in the working space between the well casing and auger column as the augers are retracted. This latter auger retraction technique may provide greater continuity between measurements taken during each increment of filter pack emplacement. Retracting the auger column with the winch line can also permit the option of adding filter pack while the auger column is simultaneously withdrawn from the borehole. Bridging problems, which lock the well casing and augers together and cause the casing to pull out of the borehole along with the augers, may also be more readily detected when the auger column is retracted by using a winch line. The use of a winch line, however, may pull the auger column off center. If the auger column is pulled off center, there may be an increased potential for the casing to become wedged within the augers.

When the formation materials adjacent to the well intake are noncohesive and the borehole will not rematin open as the auger column is retracted, the method for installing the filter pack may require the use of clean water (C. Harris, John Mathes and Associates, personal communication, 1987). Similar to the other methods of filter pack emplacement, a measuring rod or weighted measuring tape is first lowered to the bottom of the borehole through the working space between the well casing and auger column. Clean water is then added to the working space between the casing and augers to maintain a positive pressure head in the auger column. As the auger column is slowly retracted using a winch line, a measured portion of the precalculated volume of filter pack is poured down the working space between the well casing and auger column. The head of clean water in the working space between the casing and augers usually holds the borehole open while the filter pack material is emplaced in the annular space between the well intake and borehole wall. This procedure of slowly retracting the auger column with a winch line while filter pack material is poured through a positive pressure head of clean water in the working space continues until the required length of filter pack is installed. Once again, measurements of the emplaced filter pack usually are taken and recorded along with calculations of "filter pack needed" versus "filter pack used."

If the formation materials adjacent to the well intake are noncohesive and comprised of coarse-grained sediments, an artificial filter pack may not have to be installed. The natural coarse-grained sediments from the formation may instead be allowed to collapse around the well intake (with appropriately sized openings) as the auger column is retracted from the borehole. This procedure initially involves retracting the auger column 1 to 2 feet. A measuring rod or weighted measuring tape is then lowered through the working space between the auger column and casing to verify the collapse of formation material around the well intake and to measure the depth to the top of "caved" materials. Once the formation materials collapse around the well intake and fill the borehole beneath the auger column, the augers are retracted another 1 to 2 feet. This alternating sequence of retracting the auger column and verifying the collapse of formation materials by measuring the depth to the top of the caved materials continues until the coarse-

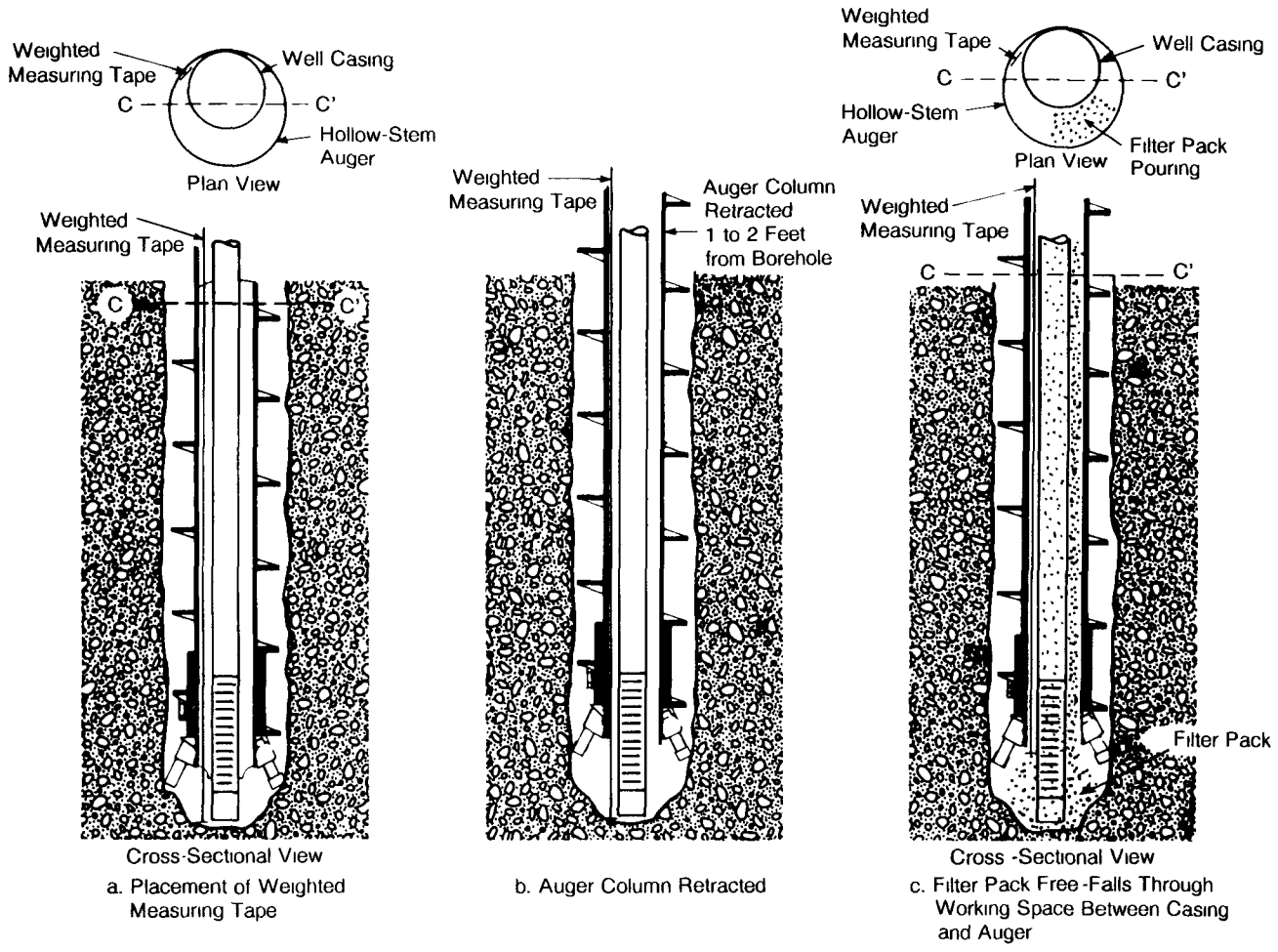

Figure 19. Free fall method of filter pack emplacement with a hollow-stem auger.

grained sediments extend to a desired height above the top of the well intake. The finer-grained fraction of the collapsed formation materials is later removed from the area adjacent to the well intake during well development.

Installation of the Annular Seal

Once the well intake, well casing and filter pack are installed through the hollow axis of the auger column, the final phase of monitoring well construction typically involves the installation of an annular seal. The annular seal is constructed by emplacing a stable, low permeability material in the annular space between the well casing and borehole wall (Figure 16). The sealant is commonly bentonite, expanding neat cement or a cement-bentonite mixture. The annular seal typically extends from the top of the filter pack to the bottom of the surface seal. The annular seal provides: 1) protection against the movement of surface water or near-surface contaminants down the casing-borehole annulus; 2) isolation of discrete sampling zones; and 3) prevention of the vertical movement of water in the casing-borehole annulus and the cross-contamination of strata. An effective annular seal requires that the casing-borehole annulus be completely filled with a sealant and that the physical integrity of the seal be maintained throughout the life of the monitoring well. The sealant should ideally be chemically nonreactive to minimize any potential impact the sealant may have on the quality of ground-water samples collected from the completed monitoring well.

Although bentonite and cement are the two most widely used annular sealants for monitoring wells, these materials have the potential for affecting the quality of ground-water samples. Bentonite has a high cation exchange capacity and may have an appreciable impact on the chemistry of the collected ground-water samples, particularly when the bentonite seal is in close proximity to the well intake (Gibb, 1987). Hydrated cement is highly alkaline and may cause persistent, elevated pH values in ground-water samples when the cement seal is near or adjacent to the well intake (Dunbar et al., 1985). Raising the pH of the ground water may further alter the solubility and presence of other constituents in the ground-water samples.

An adequate distance between the well intake and the annular sealant is typically provided when the filter pack is extended 2 feet above the top of the well intake. Bentonite pellets are commonly emplaced on top of the filter pack in the saturated zone (United States Environmental Protection Agency, 1986). Water in the saturated zone hydrates and expands the bentonite pellets thereby forming a seal in the casing-borehole annulus above the filter pack. The use of bentonite pellets directly on top of the filter pack generally is preferred because the pellet-form of bentonite may minimize

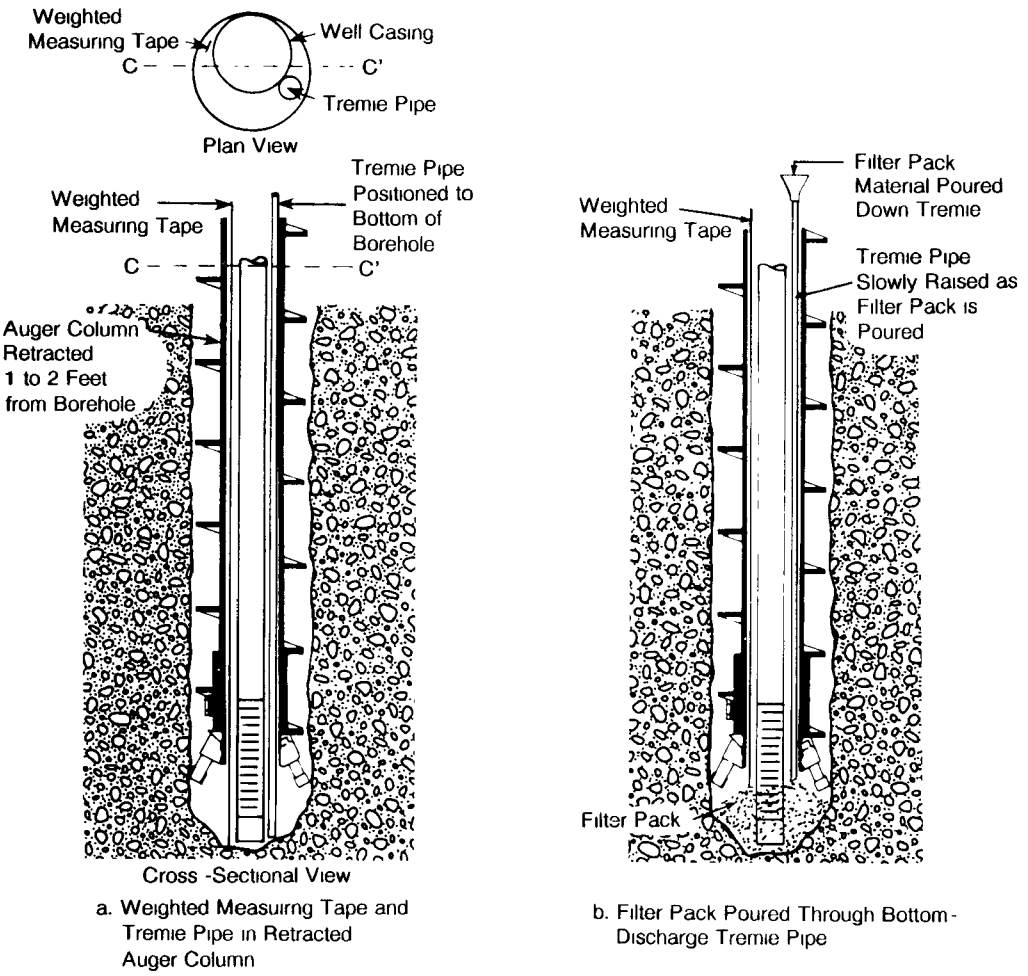

Figure 20. Tremie method of filter pack emplacement with a hollow-stem auger.

the threat of the bentonite infiltrating the filter pack. United States Environmental Protection Agency (1986) recommends that there be a minimum 2-foot, height of bentonite pellets in the casing-borehole annulus above the filter pack. The bentonite pellets, however, should not extend above the saturated zone.

Bentonite pellets are emplaced through the hollow-stem augers by free fall of the pellets through the working space between the well casing and auger column. Prior to emplacing the bentonite pellets, the theoretical volume of bentonite pellets needed to fill the annular space between the well casing and borehole wall over the intended length of the seal is determined (see section on Installation of the Filter Pack for a discussion on how to calculate the theoretical volume of material needed). A measuring rod or weighted measuring tape is lowered to the top of the filter pack through the working space between the casing and augers. A depth measurement is taken and recorded. The auger column is then retracted 1 or 2 feet from the borehole and a measured portion of the precalculated volume of bentonite pellets is slowly poured down the working space between the well casing and auger column. In some instances, the bentonite pellets may be individually dropped, rather than poured, down this working space. The bentonite pellets free fall through the working space betweeen the casing and augers and fill the annular space between the well casing and borehole wall immediately above the filter pack. As the bentonite pellets are being added, the measuring rod or weighted measuring tape is slowly raised and lowered to lightly tamp the pellets in place and to measure the depth of emplacement of the bentonite pellets. Once the bentonite pellets are emplaced to the bottom of the auger column, the augers are again retracted 1 or 2 feet from the borehole and more bentonite pellets are added. This procedure continues until the bentonite pellets are installed to the required height above the filter pack. Actual depth measurements of the emplaced pellets are recorded and compared with the calculations for the volume of "bentonite pellets needed" versus "bentonite pellets used."

The free fall of bentonite pellets through the working space between the well casing and auger column provides the opportunity for bridging problems to occur. Bridging problems are likely to occur particularly when the static water level in the working space is shallow and the well is relatively deep. As bentonite pellets fall through a column of standing water, the bentonite on the outer surface of the pellet starts to hydrate and the pellet surface expands and becomes sticky. Individual bentonite pellets may begin sticking to the inside wall of the

auger column or to the outer surface of the well casing after having fallen only a few feet through a column of water between the casing and augers. Bentonite pellets may also stick together and bridge the working space between the casing and augers. As a result, the pellets may not reach the intended depth for proper annular seal emplacement. The bentonite pellets will continue to expand as the bentonite fully hydrates. An expanding bridge of bentonite pellets in the working space may eventually lock the well casing and auger column together causing the casing to pull back out of the borehole as the auger column is retracted.

Careful installation techniques can minimize the bridging of bentonite pellets in the working space between the casing and augers. These techniques include: 1) adequately sizing the working space between the well casing and auger column; 2) slowly adding individual bentonite pellets through the working space; and 3) frequently raising and lowering the measuring device to break up potential bridges of pellets. Driscoll (1986) reports that freezing the bentonite pellets or cooling the pellets with liquid nitrogen to form an icy outer coating may enable the bentonite pellets to free fall a greater depth through standing water before hydration of the pellets begins. The frozen bentonite pellets should, however, be added individually in the working space between the casing and augers to avoid clumping of the frozen pellets as they contact the standing water in the working space.

The potential problem of bentonite pellets bridging the working space between the well casing and auger column may be avoided by using instead a bentonite slurry, neat cement grout or cement-bentonite mixture pumped directly into the annular space between the well casing and borehole wall in the saturated zone. In the unsaturated zone, neat cement grout or a cement-bentonite mixture commonly is used as the annular sealant. In either instance, the slurry is pumped under positive pressure through a tremie pipe which is first lowered through the working space between the well casing and auger column. However, tremie emplacement of a bentonite slurry or cement-based grout directly on top of the filter pack is not recommended because these slurry mixtures may easily infiltrate into the filter pack. Ramsey et al., (1982) recommend that a 1 to 2-foot thick fine sand layer be placed on top of the filter pack prior to emplacement of the bentonite slurry or cement grout. The fine-sand layer minimizes the potential for the grout slurry to infiltrate into the filter pack. If bentonite pellets are initially emplaced on top of the filter pack, prior to the addition of a bentonite slurry or cement-based grout, the pellets serve the same purpose as the fine sand and minimize the potential for the infiltration of the grout slurry into the filter pack. When bentonite pellets are used, a suitable hydration period, as recommended by the manufacturer, should be allowed prior to the placement of the grout slurry. Failure to allow the bentonite pellets to fully hydrate and seal the annular space above the filter pack may result in the grout slurry infiltrating into the filter pack.

A side-discharge tremie pipe, rather than a bottom-discharge tremie pipe, should be used to emplace bentonite slurry or cement-based grouts above the filter pack. A side-discharge tremie may be fabricated by plugging the bottom end of the pipe and drilling 2 or 3 holes in the lower 1-foot section of the tremie. The pumped slurry will discharge laterally from the tremie and dissipate any fluid-pumping energy against the borehole wall and well casing. This eliminates discharging the pumped slurry directly downward toward the filter pack and minimizes the potential for the sealant to infiltrate into the filter pack.

Prior to emplacing a bentonite slurry or cement-based grout via the tremie method, the theoretical volume of slurry needed to fill the annular space between the well casing and borehole wall over the intended length of the annular seal is determined (see section on Installation of the Filter Pack for a discussion on how to calculate the theoretical volume of material needed). An additional volume of annular sealant should be prepared and readily available at the drill site to use if a discrepancy occurs between the volume of "annular sealant needed" versus "annular sealant used." The installation of the annular sealant should be completed in one continuous operation which permits the emplacement of the entire annular seal.

The procedure for emplacing a bentonite slurry or cement-based grout with a tremie pipe begins by lowering a measuring rod or weighted measuring tape through the working space between the well casing and auger column. A measurement of the depth to the top of the fine sand layer or bentonite pellet seal above the filter pack is taken and recorded. The auger column is commonly retracted 2 1/2 to 5 feet, and a side-discharge tremie pipe, with a minimum 1-inch inside diameter, is lowered through the working space between the casing and augers. The bottom of the tremie is positioned above the fine sand layer or bentonite pellet seal. A measured portion of the precalculated volume of bentonite slurry or cement-based grout is pumped through the tremie. The grout slurry discharges from the side of the pipe, filling the annular space between the well casing and borehole wall. As the grout slurry is pumped through the tremie, the measuring rod or weighted measuring tape is slowly raised and lowered to detect and measure the depth of slurry emplacement. Once the slurry is emplaced to the bottom of the auger column, the augers are retracted by using a winch line, the measuring rod or tape and tremie pipe may remain inside the working space between the casing and augers as the augers are pulled back from the borehole. Retracting the auger column with the winch line may also permit the option of pumping the grout slurry through the tremie while the auger column is simultaneously withdrawn from the borehole. A quick-disconnect fitting can be used to attach the grout hose to the top of the tremie pipe. This fitting allows the grout hose to be easily detached from the tremie as individual 5-foot auger sections are disconnected from the top of the auger column. By successively retracting the auger column and pumping the bentonite slurry or cement-based grout into the annular space between the well casing and borehole wall, the annular sealant is emplaced from the bottom of the annular space to the top. The tremie pipe can be moved upward as the slurry is emplaced, or it can be left in place at the bottom of the annulus until the annular seal is emplaced to the required height. Measurements of the depths of the emplaced annular seal are taken and recorded. Calculations of the theoretical volume of "annular sealant needed" versus "annular sealant used" should also be recorded, and any discrepancies should be explained.

Summary

Hollow-stem augers, like all drilling methods, have advantages and limitations for drilling and constructing monitor-

ing wells. Advantages of using hollow-stem auger drilling equipment include: 1) the mobility of the drilling rig; 2) the versatility of multi-purpose rigs for auger drilling, rotary drilling and core drilling; 3) the ability to emplace well casing and intake, filter pack and annular seal material through the hollow-stem auger; and 4) the utility of the hollow-stem auger for collecting representative or relatively undisturbed samples of the formation. Other advantages associated with hollow-stem augers relate to the drilling procedure and include: 1) relatively fast advancement of the borehole in unconsolidated deposits; 2) minimal formation damage in sands and gravels; 3) minimal, if any, use of drilling fluids in the borehole; and 4) good control or containment of cuttings exiting from the borehole. Limitations of the drilling procedure include: 1) the inability to drill through hard rock or deposits with boulders; 2) smearing of the silts and clays along the borehole wall; 3) a variable maximum drilling depth capability, which is typically less than 150 feet for most rigs; and 4) a variable borehole diameter.

The drilling techniques used to advance a borehole with hollow-stem augers may vary when drilling in the unsaturated versus the saturated zone. In the unsaturated zone, drilling fluids are rarely, if ever, used. However, in a saturated zone in which heaving sands occur, changes in equipment and drilling techniques are required to provide a positive pressure head of water within the auger column. This may require the addition of clean water or other drilling fluid inside the augers. If a positive pressure head of water cannot be maintained inside the auger column when drilling in heaving sands, the heaving sands may represent a linitation to the use of hollow-stem augers for the installation of a monitoring well.

The vertical movement of contaminants in the borehole may be a concern when drilling with hollow-stem augers. When monitoring the quality of ground water below a known contaminated zone, hollow-stem auger drilling may not be advisable unless protective surface casing can be installed. Depending on the site hydrogeology, conventional hollow-stem auger drilling techniques alone may not be adequate for the installation of the protective surface casing. A hybrid drilling method may be needed which combines conventional hollow-stem auger drilling with a casing driving technique that advances the borehole and surface casing simultaneously.

The procedure used to construct monitoring wells with hollow-stem augers may vary significantly depending on the hydrogeologic conditions at the drill site. In cohesive materials where the borehole stands open, the auger column may be fully retracted from the borehole prior to the installation of the monitoring well. In noncohesive materials in which the borehole will not remain open, the monitoring well is generally constructed through the hollow axis of the auger column.

The procedures used to construct monitoring wells inside the hollow-stem augers may also vary depending on specific site conditions and the experience of the driller. The proper emplacement of the filter pack and annular seal can be difficult or impossible, if an inadequate working space is available between the well casing and hollow-stem auger. An adequate working space can be made available by using an appropriately-sized diameter hollow-stem auger for the installation of the required-size well casing and intake. The maximum diameter of a monitoring well constructed through the hollow-stem auger of the larger diameter augers now commonly available will typically be limited to 4 inches or less. Assurance that the filter pack and annular seal are properly emplaced is typically limited to careful measurements taken and recorded during construction of the monitoring well.

References

Central Mine and Equipment Company, 1987. Catalog of product literature; St. Louis, Missouri, 12 pp.

Diedrich Drilling Equipment, 1986. Catalog of product literature; LaPorte, Indiana, 106 pp.

Driscoll, Fletcher G., 1986. Groundwater and Wells; Johnson Division, St. Paul, Minnesota, 1089 pp.

Dunbar, Dave, Hal Tuchfield, Randy Siegel and Rebecca Sterbentz, 1985. Ground water quality anomalies encountered during well construction, sampling and analysis in the environs of a hazardous waste management facility; Ground Water Monitoring Review, vol. 5, No. 3, pp. 70-74.

Gass, Tyler E., 1984. Methodology for monitoring wells; Water Well Journal, vol. 38, no. 6, pp. 30-31.

Gibb, James P., 1987. How drilling fluids and grouting materials affect the integrity of ground water samples from monitoring wells, opinion I; Ground Water Monitoring Review, vol. 7, no. 1, pp. 33-35.

Gillham, R.W., M.L. Robin, J.F. Barker and J.A. Cherry, 1983. Groundwater monitoring and sample bias; API Publication 4367, Environmental Affairs Department, American Petroleum Institute, Washington D.C., 206 pp.

Hackett, Glen, 1987. Drilling and constructing monitoring wells with hollow-stem augers, part I: drilling considerations; Ground Water Monitoring Review, vol. 7, no. 4, pp. 51-62.

Hackett, Glen, 1988. Drilling and constructing monitoring wells with hollow-stem augers, part II: monitoring well installation; Ground Water Monitoring Review, vol. 8, no. 1, pp. 60-68.

Keely, Joseph F. and Kwasi Boateng, 1987a. Monitoring well installation, purging and sampling techniques part 1: conceptualizations; Ground Water, vol. 25, no. 3, pp. 300-313.

Keely, Joseph F. and Kwasi Boateng, 1987b. Monitoring well installation, purging, and sampling techniques part 2: case histories; Ground Water, vol. 25, no. 4, pp. 427-439.

Mcray, Kevin B., 1986. Results of survey of monitoring well practices among ground water professionals; Ground Water Monitoring Review, vol. 6, no. 4, pp. 37-38.

Minning, Robert C., 1982. Monitoring well design and installation; Proceedings of the Second National Symposium on Aquifer Restoration and Ground Water Monitoring; Columbus, Ohio, pp. 194-197.

Mobile Drilling Co., 1982. Auger tools and accessories product literature; Indianapolis, Indiana, 26 pp.

Mobile Drilling Company, 1983. Mobile drill product catalog; Indianapolis, Indiana 37 pp.

Perry, Charles A. and Robert J. Hart, 1985. Installation of observation wells on hazardous waste sites in Kansas using a hollow-stem auger; Ground Water Monitoring Review, vol. 5, no. 4, pp. 70-73.

Ramsey, Robert J.. James M. Montgomery and George E. Maddox, 1982. Monitoring ground-water contamination in Spokane County, Washington; Proceedings of the

Second National Symposium on Aquifer Restoration and Ground Water Monitoring, Columbus, Ohio, pp. 198-204.

Richter, Henry R. and Michael G. Collentine, 1983. Will my monitoring wells survive down there?: design and installation techniques for hazardous waste studies; Proceedings of the Third National Symposium on Aquifer Restoration and Ground Water Monitoring, Columbus, Ohio, pp. 223-229.

Riggs, Charles O., 1983. Soil Sampling in the vadose zone; Proceedings of the NWWA/U.S. EPA Conference on Characterization and Monitoring of the Vadose (Unsaturated) Zone, Las Vegas, Nevada, pp. 611-622.

Riggs, Charles 0., 1986. Exploration for deep foundation analyses; Proceedings of the International Conference on Deep Foundations, Beijing, China, volume II, China Building Industry Press, Beijing, China, pp. 146-161.

Riggs, Charles O., 1987. Drilling methods and installation technology for RCRA monitoring wells; RCRA Ground Water Monitoring Enforcement: Use of the TEGD and COG, RCRA Enforcement Division, Office of Waste Programs Enforcement, united States Environmental Protection Agency, pp. 13-39.

Riggs, Charles O., and Allen W. Hatheway 1988. Ground-water monitoring field practice - an overview; Ground-Water Contamination Field Methods, Collins and Johnston editors, ASTM Publication Code Number 04-963000-38, Philadelphia, Pennsylvania, pp. 121-136.

Scalf, M.R., J.F. McNabb, W.J. Dunlap, R.L. Cosby and J. Fryberger, 1981. Manual of ground-water sampling procedures; National Water Well Assocation, 93 pp.

Schmidt, Kenneth D., 1986. Monitoring well drilling and sampling in alluvial basins in arid lands; Proceedings of the Conference on Southwestern Ground Water Issues, Tempe, Arizona, National Water Well Association, Dublin, Ohio, pp. 443-455.

United States Environmental Protection Agency, 1986. RCRA Ground-water monitoring technical enforcement guidance document; Office of Waste Programs Enforcement, Office of Solid Waste and Emergency Response, OSWER-99501.1, United States Environmental Protection Agency, 317 pp.

Appendix B
Matrices for Selecting Appropriate Drilling Equipment

The most appropriate drilling technology for use at a specific site can only be determined by evaluating both the hydrogeologic setting and the objectives of the monitoring program. The matrices presented here were developed to assist the user in choosing an appropriate drilling technology. These matrices address the most prevalent hydrogeologic settings where monitoring wells are installed and encompass the drilling technologies most often applied. The matrices have been developed to act as guidelines; however, because they are subjective, the user is invited to make site-specific modifications. Prior to using these matrices, the prospective user should review the portion in Section 4 entitled "Selection of Drilling Methods for Monitoring Well Installation."

Several general assumptions were used during development of the matrices. These are detailed below:

1) Solid-flight auger and hollow-stem auger drilling techniques are limited to a practical drilling depth of 150 feet in most areas based on the equipment generally available;
2) Formation samples collected:
   a) during drilling with air rotary, air rotary with casing hammer and dual-wall air rotary techniques are assumed to be from surface discharge of the circulated sample;
   b) during drilling with solid-flight augers, hollow-stem augers, mud rotary or cable tool techniques are assumed to be taken by standard split-spoon (ASTM D1586) or thin-wall (ASTM D1587) sampling techniques to a depth of 150 feet at 5-foot intervals;
   c) below 150 feet, during mud rotary drilling are assumed to be circulated samples taken from the drilling mud at the surface discharge; and
   d) below 150 feet, during cable-tool drilling are assumed to be taken by bailer.

   If differing sampling methodologies are employed, the ratings for reliability of samples, cost and time need to be re-evaluated. (Wireline or piston sampling methods are available for use with several drilling techniques; however, these methods were not included in the development of the matrices);
3) Except for wells installed using driving and jetting techniques, the borehole is considered to be no less than 4 inches larger in diameter than the nominal diameter of the casing and screen used to complete the well (e.g., a minimum 6-inch borehole is necessary for completion of a 2-inch diameter cased well);
4) Artificial filter pack installation is assumed in all completions except for wells installed using driving and jetting techniques;
5) The development of ratings in the matrices is based on the largest expressed casing diameter in each range listed in the "General Hydrogeologic Conditions & Well Design Requirements" statement;
6) For purposes of the "General Hydrogeologic Conditions & Well Design Requirements," air is not considered as a drilling fluid; and
7) In the development of the dual-wall rotary technique ratings in the matrices, air is considered to be the circulation medium.

Each applicable drilling method that can be used in the described hydrogeologic setting and with the stated specific design requirements has been evaluated on a scale of 1 to 10 with respect to the criteria listed in the matrix. A total number for each drilling method was computed by adding the scores for the various criteria. The totals represent a relative indication of the desirability of drilling methods for the specified conditions.

INDEX TO MATRICES 1 THROUGH 40

Matrix Number / General Hydrogeologic Conditions and Well Design Requirements	Unconsolidated	Consolidated	Saturated	Unsaturated	Invasion Permitted	Invasion Prohibited	Depth 0–15 Feet	Depth 15–150 Feet	Depth >150 Feet	<2-Inch Diameter Casing	2–4 Inch Diameter Casing	4–8 Inch Diameter Casing
1	x		x		x		x			x		
2	x		x		x			x		x		
3	x		x		x				x	x		
4	x		x		x		x				x	
5	x		x		x			x			x	
6	x		x		x				x		x	
7	x		x		x		x					x
8	x		x		x			x				x
9	x		x		x				x			x
10	x		x			x	x			x		
11	x		x			x		x		x		
12	x		x			x			x	x		
13	x		x			x	x				x	
14	x		x			x		x			x	
15	x		x			x			x		x	
16	x		x			x	x					x
17	x		x			x		x				x
18	x		x			x			x			x
19	x			x	x		x			x		
20	x			x	x			x		x		
21	x			x	x				x	x		
22	x			x	x		x				x	
23	x			x	x			x			x	
24	x			x	x				x		x	
25	x			x	x		x					x
26	x			x	x			x				x
27	x			x	x				x			x
28	x			x		x	x			x		
29	x			x		x		x		x		
30	x			x		x			x	x		
31	x			x		x	x				x	
32	x			x		x		x			x	
33	x			x		x			x		x	
34	x			x		x	x					x
35	x			x		x		x				x
36	x			x		x			x			x
37		x			x						x	
38		x			x							x
39		x				x					x	
40		x				x						x

MATRIX NUMBER 1

General Hydrogeologic Conditions & Well Design Requirements

Unconsolidated; saturated; invasion of formation by drilling fluid permitted, casing diameter 2 inches or less; total well depth 0 to 15 feet.

DRILLING METHODS / CRITERIA FOR EVALUATION OF DRILLING METHODS	Versatility of Drilling Method	Sample Reliability	Relative Drilling Cost	Availability of Drilling Equipment	Relative Time Required for Well Installation and Development	Ability of Drilling Technology to Preserve Natural Conditions	Ability to Install Design Diameter of Well	Relative Ease of Well Completion and Development	TOTAL
Hand Auger	1	5	9	10	5	9	6	4	49
Driving	1	1	10	10	5	5	1	4	37
Jetting	2	1	8	10	5	1	1	1	29
Solid Flight Auger	3	4	7	9	10	4	5	2	44
Hollow Stem Auger	10	10	9	9	10	8	10	9	75
Mud Rotary	8	10	8	10	7	4	10	5	62
Air Rotary	NA	NA	NA	NA	NA	NA	NA	NA	NA
Air Rotary with Casing Hammer	7	5	6	4	6	9	10	10	57
Dual Wall Rotary	7	8	6	1	6	9	10	9	56
Cable Tool	9	10	5	7	4	10	10	10	65

EXPLANATORY NOTES:

1. Unconsolidated formations, predominantly saturated, with saturation exerting significant influence on the choice of drilling technology.
2. Borehole stability problems are potentially severe.
3. The anticipated use of the monitoring well permits the use of drilling fluid and additives in construction.
4. The shallow depth of up to 15 feet, and small completed well diameter of 2 inches or less allows maximum flexibility in equipment.

MATRIX NUMBER 2

General Hydrogeologic Conditions & Well Design Requirements

Unconsolidated; saturated; invasion of formation by drilling fluid permitted; casing diameter 2 inches or less; total well depth 15 to 150 feet.

DRILLING METHODS / CRITERIA FOR EVALUATION OF DRILLING METHODS	Versatility of Drilling Method	Sample Reliability	Relative Drilling Cost	Availability of Drilling Equipment	Relative Time Required for Well Installation and Development	Ability of Drilling Technology to Preserve Natural Conditions	Ability to Install Design Diameter of Well	Relative Ease of Well Completion and Development	TOTAL
Hand Auger	NA	NA	NA	NA	NA	NA	NA	NA	NA
Driving	1	1	4	10	1	5	1	7	30
Jetting	1	1	5	10	3	1	1	1	23
Solid Flight Auger	3	3	2	9	7	4	8	1	37
Hollow Stem Auger	8	9	8	9	8	8	8	9	67
Mud Rotary	10	10	10	10	9	4	10	4	67
Air Rotary	NA	NA	NA	NA	NA	NA	NA	NA	NA
Air Rotary with Casing Hammer	8	5	7	4	9	8	10	9	60
Dual Wall Rotary	10	8	7	1	10	9	10	8	63
Cable Tool	9	10	5	7	5	10	10	10	66

EXPLANATORY NOTES:

1. Unconsolidated formations, predominantly saturated, with saturation exerting significant influence on the choice of drilling technology.
2. Borehole stability problems are potentially severe.
3. The anticipated use of the monitoring well permits the use of drilling fluid and additives in construction.
4. As the depth increases from 15 to 150 feet, the limit of hollow-stem auger equipment is approached. The actual limit varies with geologic conditions, specific equipment capability and borehole size (both outside diameter and inside diameter) requirements. Hollow-stem auger techniques are favored for shallower depths, with mud rotary being favored as the depth increases.
5. Where dual-wall air techniques are used, completion is through the bit.

MATRIX NUMBER 3

General Hydrogeologic Conditions & Well Design Requirements

Unconsolidated; saturated; invasion of formation by drilling fluid permitted; casing diameter 2 inches or less; total well depth greater than 150 feet.

DRILLING METHODS / CRITERIA FOR EVALUATION OF DRILLING METHODS	Versatility of Drilling Method	Sample Reliability	Relative Drilling Cost	Availability of Drilling Equipment	Relative Time Required for Well Installation and Development	Ability of Drilling Technology to Preserve Natural Conditions	Ability to Install Design Diameter of Well	Relative Ease of Well Completion and Development	TOTAL
Hand Auger	NA	NA	NA	NA	NA	NA	NA	NA	NA
Driving	NA	NA	NA	NA	NA	NA	NA	NA	NA
Jetting	NA	NA	NA	NA	NA	NA	NA	NA	NA
Solid Flight Auger	NA	NA	NA	NA	NA	NA	NA	NA	NA
Hollow Stem Auger	NA	NA	NA	NA	NA	NA	NA	NA	NA
Mud Rotary	10	1	10	10	9	5	10	6	61
Air Rotary	NA	NA	NA	NA	NA	NA	NA	NA	NA
Air Rotary with Casing Hammer	8	6	5	4	7	10	10	10	60
Dual Wall Rotary	10	10	8	1	10	10	10	10	69
Cable Tool	9	8	5	7	4	9	10	10	62

EXPLANATORY NOTES:

1. Unconsolidated formations, predominantly saturated, with saturation exerting significant influence on the choice of drilling technology.
2. Borehole stability problems are potentially severe.
3. The anticipated use of the monitoring well permits the use of drilling fluid and additives in construction.
4. Where dual-wall air techniques are used, completion is through the bit.
5. Depths greater than 150 feet limit technique choices.

MATRIX NUMBER 4

General Hydrogeologic Conditions & Well Design Requirements

Unconsolidated; saturated; invasion of formation by drilling fluid permitted; casing diameter 2 to 4 inches; total well depth 0 to 15 feet.

DRILLING METHODS / CRITERIA FOR EVALUATION OF DRILLING METHODS	Versatility of Drilling Method	Sample Reliability	Relative Drilling Cost	Availability of Drilling Equipment	Relative Time Required for Well Installation and Development	Ability of Drilling Technology to Preserve Natural Conditions	Ability to Install Design Diameter of Well	Relative Ease of Well Completion and Development	TOTAL
Hand Auger	NA	NA	NA	NA	NA	NA	NA	NA	NA
Driving	1	1	10	10	5	5	1	4	37
Jetting	2	1	8	10	5	2	1	1	30
Solid Flight Auger	1	4	7	9	10	4	4	2	41
Hollow Stem Auger	8	10	7	9	10	8	8	8	68
Mud Rotary	7	10	7	10	7	4	10	5	60
Air Rotary	NA	NA	NA	NA	NA	NA	NA	NA	NA
Air Rotary with Casing Hammer	8	5	6	4	6	9	10	10	58
Dual Wall Rotary	10	8	5	1	6	10	8	8	56
Cable Tool	10	10	5	7	4	9	10	10	65

EXPLANATORY NOTES:

1. Unconsolidated formations, predominantly saturated, with saturation exerting significant influence on the choice of drilling technology.
2. Borehole stability problems are potentially severe.
3. The anticipated use of the monitoring well permits the use of drilling fluid and additives in construction.
4. Four-inch casing diameter limits technique choices even though depths are shallow (15 feet or less) Large diameter (I D.) hollow-stem augers required. Solid flight augers require open-hole completion in potentially unstable materials.

MATRIX NUMBER 5

General Hydrogeologic Conditions & Well Design Requirements

Unconsolidated; saturated; invasion of formation by drilling fluid permitted; casing diameter 2 to 4 inches; total well depth 15 to 150 feet.

DRILLING METHODS / CRITERIA FOR EVALUATION OF DRILLING METHODS	Versatility of Drilling Method	Sample Reliability	Relative Drilling Cost	Availability of Drilling Equipment	Relative Time Required for Well Installation and Development	Ability of Drilling Technology to Preserve Natural Conditions	Ability to Install Design Diameter of Well	Relative Ease of Well Completion and Development	TOTAL
Hand Auger	NA	NA	NA	NA	NA	NA	NA	NA	NA
Driving	1	1	2	10	1	5	1	4	25
Jetting	1	1	3	10	3	1	1	1	21
Solid Flight Auger	3	3	2	9	7	4	2	2	32
Hollow Stem Auger	5	10	8	9	9	8	5	5	59
Mud Rotary	10	10	10	10	10	4	10	5	69
Air Rotary	NA	NA	NA	NA	NA	NA	NA	NA	NA
Air Rotary with Casing Hammer	8	5	5	4	9	9	10	10	60
Dual Wall Rotary	10	8	8	1	8	10	8	8	61
Cable Tool	9	10	5	7	5	9	10	10	65

EXPLANATORY NOTES:

1. Unconsolidated formations, predominantly saturated, with saturation exerting significant influence on the choice of drilling technology.
2. Borehole stability problems are potentially severe.
3. The anticipated use of the monitoring well permits the use of drilling fluid and additives in construction.
4. Four-inch casing diameter limits technique choice even though depths are 15 to 150 feet. Large diameter (I.D.) hollow-stems are required. Solid flight augers require open-hole completion in potentially unstable materials.
5. With increasing depth, mud rotary, dual-wall rotary and cable tool techniques become favored.

MATRIX NUMBER 6

General Hydrogeologic Conditions & Well Design Requirements

Unconsolidated; saturated; invasion of formation by drilling fluid permitted; casing diameter 2 to 4 inches; total well depth greater than 150 feet.

DRILLING METHODS / CRITERIA FOR EVALUATION OF DRILLING METHODS	Versatility of Drilling Method	Sample Reliability	Relative Drilling Cost	Availability of Drilling Equipment	Relative Time Required for Well Installation and Development	Ability of Drilling Technology to Preserve Natural Conditions	Ability to Install Design Diameter of Well	Relative Ease of Well Completion and Development	TOTAL
Hand Auger	NA	NA	NA	NA	NA	NA	NA	NA	NA
Driving	NA	NA	NA	NA	NA	NA	NA	NA	NA
Jetting	NA	NA	NA	NA	NA	NA	NA	NA	NA
Solid Flight Auger	NA	NA	NA	NA	NA	NA	NA	NA	NA
Hollow Stem Auger	NA	NA	NA	NA	NA	NA	NA	NA	NA
Mud Rotary	10	4	10	10	10	6	10	6	66
Air Rotary	NA	NA	NA	NA	NA	NA	NA	NA	NA
Air Rotary with Casing Hammer	7	8	5	4	7	9	10	10	60
Dual Wall Rotary	10	10	6	1	6	10	7	8	58
Cable Tool	9	8	3	7	4	9	10	10	60

EXPLANATORY NOTES:

1. Unconsolidated formations, predominantly saturated, with saturation exerting significant influence on the choice of drilling technology.
2. Borehole stability problems are potentially severe.
3. The anticipated use of the monitoring well permits the use of drilling fluid and additives in construction.
4. Four-inch casing diameter and depths greater than 150 feet limit technique choices.
5. With increasing depth, mud rotary, dual-wall rotary and cable tool techniques become favored.

MATRIX NUMBER 7

General Hydrogeologic Conditions & Well Design Requirements

Unconsolidated; saturated; invasion of formation by drilling fluid permitted; casing diameter 4 to 8 inches; total well depth 0 to 15 feet.

DRILLING METHODS / CRITERIA FOR EVALUATION OF DRILLING METHODS	Versatility of Drilling Method	Sample Reliability	Relative Drilling Cost	Availability of Drilling Equipment	Relative Time Required for Well Installation and Development	Ability of Drilling Technology to Preserve Natural Conditions	Ability to Install Design Diameter of Well	Relative Ease of Well Completion and Development	TOTAL
Hand Auger	NA	NA	NA	NA	NA	NA	NA	NA	NA
Driving	NA	NA	NA	NA	NA	NA	NA	NA	NA
Jetting	NA	NA	NA	NA	NA	NA	NA	NA	NA
Solid Flight Auger	NA	NA	NA	NA	NA	NA	NA	NA	NA
Hollow Stem Auger	NA	NA	NA	NA	NA	NA	NA	NA	NA
Mud Rotary	10	10	10	10	8	6	10	3	67
Air Rotary	NA	NA	NA	NA	NA	NA	NA	NA	NA
Air Rotary with Casing Hammer	8	8	6	7	10	10	10	10	69
Dual Wall Rotary	NA	NA	NA	NA	NA	NA	NA	NA	NA
Cable Tool	8	10	4	7	4	8	10	10	61

EXPLANATORY NOTES:

1. Unconsolidated formations, predominantly saturated, with saturation exerting significant influence on the choice of drilling technology.
2. Borehole stability problems are potentially severe.
3. The anticipated use of the monitoring well permits the use of drilling fluid and additives in construction.
4. Casing diameter 4 to 8 inches requires up to 12-inch borehole size and eliminates all techniques except mud rotary, cable tool and air rotary with casing hammer (that can usually drive large O.D. casing to shallow depth).

MATRIX NUMBER 8

General Hydrogeologic Conditions & Well Design Requirements

Unconsolidated; saturated; invasion of formation by drilling fluid permitted; casing diameter 4 to 8 inches; total well depth 15 to 150 feet.

DRILLING METHODS / CRITERIA FOR EVALUATION OF DRILLING METHODS	Versatility of Drilling Method	Sample Reliability	Relative Drilling Cost	Availability of Drilling Equipment	Relative Time Required for Well Installation and Development	Ability of Drilling Technology to Preserve Natural Conditions	Ability to Install Design Diameter of Well	Relative Ease of Well Completion and Development	TOTAL
Hand Auger	NA	NA	NA	NA	NA	NA	NA	NA	NA
Driving	NA	NA	NA	NA	NA	NA	NA	NA	NA
Jetting	NA	NA	NA	NA	NA	NA	NA	NA	NA
Solid Flight Auger	NA	NA	NA	NA	NA	NA	NA	NA	NA
Hollow Stem Auger	NA	NA	NA	NA	NA	NA	NA	NA	NA
Mud Rotary	8	10	10	10	10	6	10	3	67
Air Rotary	NA	NA	NA	NA	NA	NA	NA	NA	NA
Air Rotary with Casing Hammer	NA	NA	NA	NA	NA	NA	NA	NA	NA
Dual Wall Rotary	NA	NA	NA	NA	NA	NA	NA	NA	NA
Cable Tool	10	10	6	7	4	10	10	10	67

EXPLANATORY NOTES:

1. Unconsolidated formations, predominantly saturated, with saturation exerting significant influence on the choice of drilling technology.
2. Borehole stability problems are potentially severe.
3. The anticipated use of the monitoring well permits the use of drilling fluid and additives in construction.
4. Casing diameter 4 to 8 inches requires up to 12-inch borehole and eliminates all techniques except mud rotary and cable tool.

MATRIX NUMBER 9

General Hydrogeologic Conditions & Well Design Requirements

Unconsolidated; saturated; invasion of formation by drilling fluid permitted; casing diameter 4 to 8 inches; total well depth greater than 150 feet.

DRILLING METHODS / CRITERIA FOR EVALUATION OF DRILLING METHODS	Versatility of Drilling Method	Sample Reliability	Relative Drilling Cost	Availability of Drilling Equipment	Relative Time Required for Well Installation and Development	Ability of Drilling Technology to Preserve Natural Conditions	Ability to Install Design Diameter of Well	Relative Ease of Well Completion and Development	TOTAL
Hand Auger	NA	NA	NA	NA	NA	NA	NA	NA	NA
Driving	NA	NA	NA	NA	NA	NA	NA	NA	NA
Jetting	NA	NA	NA	NA	NA	NA	NA	NA	NA
Solid Flight Auger	NA	NA	NA	NA	NA	NA	NA	NA	NA
Hollow Stem Auger	NA	NA	NA	NA	NA	NA	NA	NA	NA
Mud Rotary	10	6	10	10	10	5	9	6	66
Air Rotary	NA	NA	NA	NA	NA	NA	NA	NA	NA
Air Rotary with Casing Hammer	NA	NA	NA	NA	NA	NA	NA	NA	NA
Dual Wall Rotary	NA	NA	NA	NA	NA	NA	NA	NA	NA
Cable Tool	10	10	4	7	2	10	10	10	63

EXPLANATORY NOTES:

1. Unconsolidated formations, predominantly saturated, with saturation exerting significant influence on the choice of drilling technology.
2. Borehole stability problems are potentially severe.
3. The anticipated use of the monitoring well permits the use of drilling fluid and additives in construction.
4. Casing diameter 4 to 8 inches requires up to 12-inch borehole and eliminates all techniques except mud rotary and cable tool.

MATRIX NUMBER 10

General Hydrogeologic Conditions & Well Design Requirements

Unconsolidated; saturated; invasion of formation by drilling fluid not permitted; casing diameter 2 inches or less; total well depth 0 to 15 feet.

DRILLING METHODS / CRITERIA FOR EVALUATION OF DRILLING METHODS	Versatility of Drilling Method	Sample Reliability	Relative Drilling Cost	Availability of Drilling Equipment	Relative Time Required for Well Installation and Development	Ability of Drilling Technology to Preserve Natural Conditions	Ability to Install Design Diameter of Well	Relative Ease of Well Completion and Development	TOTAL
Hand Auger	NA	NA	NA	NA	NA	NA	NA	NA	NA
Driving	1	1	10	10	5	5	1	4	37
Jetting	NA	NA	NA	NA	NA	NA	NA	NA	NA
Solid Flight Auger	1	1	7	10	5	1	1	1	27
Hollow Stem Auger	10	10	9	10	10	9	8	9	75
Mud Rotary	NA	NA	NA	NA	NA	NA	NA	NA	NA
Air Rotary	NA	NA	NA	NA	NA	NA	NA	NA	NA
Air Rotary with Casing Hammer	7	7	5	4	6	10	10	10	59
Dual Wall Rotary	7	8	5	1	6	10	10	9	56
Cable Tool	7	10	5	7	2	9	10	10	60

EXPLANATORY NOTES:

1. Unconsolidated formations, predominantly saturated, with saturation exerting significant influence on the choice of drilling technology.
2. Borehole stability problems are potentially severe, so open-hole completion (i e , solid-flight auger) may not be possible.
3. The anticipated use of the monitoring well prohibits the use of drilling fluid and additives in construction.
4. Jetting and mud rotary methods would require the addition of fluid.
5. When using cable-tool drilling in saturated formations, it is assumed that no drilling fluid needs to be added in permeable materials and that small volumes of drilling fluid are permissible in less permeable materials.

MATRIX NUMBER 11

General Hydrogeologic Conditions & Well Design Requirements

Unconsolidated; saturated; invasion of formation by drilling fluid not permitted; casing diameter 2 inches or less; total well depth 15 to 150 feet.

DRILLING METHODS / CRITERIA FOR EVALUATION OF DRILLING METHODS	Versatility of Drilling Method	Sample Reliability	Relative Drilling Cost	Availability of Drilling Equipment	Relative Time Required for Well Installation and Development	Ability of Drilling Technology to Preserve Natural Conditions	Ability to Install Design Diameter of Well	Relative Ease of Well Completion and Development	TOTAL
Hand Auger	NA	NA	NA	NA	NA	NA	NA	NA	NA
Driving	1	1	4	10	1	5	1	7	30
Jetting	NA	NA	NA	NA	NA	NA	NA	NA	NA
Solid Flight Auger	NA	NA	NA	NA	NA	NA	NA	NA	NA
Hollow Stem Auger	8	10	10	10	8	8	8	7	69
Mud Rotary	NA	NA	NA	NA	NA	NA	NA	NA	NA
Air Rotary	NA	NA	NA	NA	NA	NA	NA	NA	NA
Air Rotary with Casing Hammer	8	5	8	5	10	9	10	10	65
Dual Wall Rotary	10	8	8	1	8	9	10	10	64
Cable Tool	10	10	6	8	2	10	10	10	66

EXPLANATORY NOTES:

1. Unconsolidated formations, predominantly saturated, with saturation exerting significant influence on the choice of drilling technology.
2. Borehole stability problems are potentially severe.
3. The anticipated use of the monitoring well prohibits the use of drilling fluid and additives in construction.
4. As depth increases the relative advantage of hollow-stem augering decreases.
5. Jetting and mud rotary methods would require the addition of fluid.
6. When using cable-tool drilling in saturated formations, it is assumed that no drilling fluid needs to be added in permeable materials and that small volumes of drilling fluid are permissible in less permeable materials.

MATRIX NUMBER 12

General Hydrogeologic Conditions & Well Design Requirements

Unconsolidated; saturated; invasion of formation by drilling fluid not permitted; casing diameter 2 inches or less; total well depth greater than 150 feet.

DRILLING METHODS / CRITERIA FOR EVALUATION OF DRILLING METHODS	Versatility of Drilling Method	Sample Reliability	Relative Drilling Cost	Availability of Drilling Equipment	Relative Time Required for Well Installation and Development	Ability of Drilling Technology to Preserve Natural Conditions	Ability to Install Design Diameter of Well	Relative Ease of Well Completion and Development	TOTAL
Hand Auger	NA	NA	NA	NA	NA	NA	NA	NA	NA
Driving	NA	NA	NA	NA	NA	NA	NA	NA	NA
Jetting	NA	NA	NA	NA	NA	NA	NA	NA	NA
Solid Flight Auger	NA	NA	NA	NA	NA	NA	NA	NA	NA
Hollow Stem Auger	NA	NA	NA	NA	NA	NA	NA	NA	NA
Mud Rotary	NA	NA	NA	NA	NA	NA	NA	NA	NA
Air Rotary	NA	NA	NA	NA	NA	NA	NA	NA	NA
Air Rotary with Casing Hammer	8	6	10	7	10	8	10	10	69
Dual Wall Rotary	10	10	9	4	10	10	10	9	72
Cable Tool	9	6	7	10	6	8	10	10	66

EXPLANATORY NOTES:

1. Unconsolidated formations, predominantly saturated, with saturation exerting significant influence on the choice of drilling technology.
2. Borehole stability problems are potentially severe.
3. The anticipated use of the monitoring well prohibits the use of drilling fluid and additives in construction.
4. Jetting and mud rotary methods would require the addition of fluid.
5. When using cable-tool drilling in saturated formations, it is assumed that no drilling fluid needs to be added in permeable materials and that small volumes of drilling fluid are permissible in less permeable materials.

MATRIX NUMBER 13

General Hydrogeologic Conditions & Well Design Requirements

Unconsolidated; saturated; invasion of formation by drilling fluid not permitted; casing diameter 2 to 4 inches; total well depth 0 to 15 feet.

DRILLING METHODS / CRITERIA FOR EVALUATION OF DRILLING METHODS	Versatility of Drilling Method	Sample Reliability	Relative Drilling Cost	Availability of Drilling Equipment	Relative Time Required for Well Installation and Development	Ability of Drilling Technology to Preserve Natural Conditions	Ability to Install Design Diameter of Well	Relative Ease of Well Completion and Development	TOTAL
Hand Auger	NA	NA	NA	NA	NA	NA	NA	NA	NA
Driving	1	1	10	10	5	1	1	4	33
Jetting	NA	NA	NA	NA	NA	NA	NA	NA	NA
Solid Flight Auger	1	1	7	10	5	1	1	2	28
Hollow Stem Auger	10	10	10	10	10	8	7	7	72
Mud Rotary	NA	NA	NA	NA	NA	NA	NA	NA	NA
Air Rotary	NA	NA	NA	NA	NA	NA	NA	NA	NA
Air Rotary with Casing Hammer	9	8	5	4	6	10	10	10	62
Dual Wall Rotary	9	8	5	1	5	10	8	8	54
Cable Tool	10	10	6	7	4	9	10	10	66

EXPLANATORY NOTES:

1. Unconsolidated formations, predominantly saturated, with saturation exerting significant influence on the choice of drilling technology.
2. Borehole stability problems are potentially severe.
3. The anticipated use of the monitoring well prohibits the use of drilling fluid and additives in construction.
4. Increasing diameter is influencing choice of equipment.
5. Jetting and mud rotary methods would require the addition of fluid.
6. When using cable-tool drilling in saturated formations, it is assumed that no drilling fluid needs to be added in permeable materials and that small volumes of drilling fluid are permissible in less permeable materials.

MATRIX NUMBER 14

General Hydrogeologic Conditions & Well Design Requirements

Unconsolidated; saturated; invasion of formation by drilling fluid not permitted; casing diameter 2 to 4 inches; total well depth 15 to 150 feet.

DRILLING METHODS / CRITERIA FOR EVALUATION OF DRILLING METHODS	Versatility of Drilling Method	Sample Reliability	Relative Drilling Cost	Availability of Drilling Equipment	Relative Time Required for Well Installation and Development	Ability of Drilling Technology to Preserve Natural Conditions	Ability to Install Design Diameter of Well	Relative Ease of Well Completion and Development	TOTAL
Hand Auger	NA	NA	NA	NA	NA	NA	NA	NA	NA
Driving	1	1	2	10	1	5	1	4	25
Jetting	NA	NA	NA	NA	NA	NA	NA	NA	NA
Solid Flight Auger	1	1	2	9	3	4	2	2	24
Hollow Stem Auger	5	10	10	9	10	8	6	6	64
Mud Rotary	NA	NA	NA	NA	NA	NA	NA	NA	NA
Air Rotary	NA	NA	NA	NA	NA	NA	NA	NA	NA
Air Rotary with Casing Hammer	9	5	8	4	9	10	10	10	67
Dual Wall Rotary	9	8	8	1	9	10	6	6	57
Cable Tool	10	10	7	7	5	9	10	10	68

EXPLANATORY NOTES:

1 Unconsolidated formations, predominantly saturated, with saturation exerting significant influence on the choice of drilling technology

2. Borehole stability problems are potentially severe, so open-hole completion (i e , solid-flight auger) may not be possible.

3. The anticipated use of the monitoring well prohibits the use of drilling fluid and additives in construction.

4. Depth range is 15 to 150 feet

5 Increasing diameter and depth favor cable tool and air rotary with casing hammer techniques.

6 When using cable-tool drilling in saturated formations, it is assumed that no drilling fluid needs to be added in permeable materials and that small volumes of drilling fluid are permissible in less permeable materials.

MATRIX NUMBER 15

General Hydrogeologic Conditions & Well Design Requirements

Unconsolidated; saturated; invasion of formation by drilling fluid not permitted; casing diameter 2 to 4 inches; total well depth greater than 150 feet

DRILLING METHODS / CRITERIA FOR EVALUATION OF DRILLING METHODS	Versatility of Drilling Method	Sample Reliability	Relative Drilling Cost	Availability of Drilling Equipment	Relative Time Required for Well Installation and Development	Ability of Drilling Technology to Preserve Natural Conditions	Ability to Install Design Diameter of Well	Relative Ease of Well Completion and Development	TOTAL
Hand Auger	NA	NA	NA	NA	NA	NA	NA	NA	NA
Driving	NA	NA	NA	NA	NA	NA	NA	NA	NA
Jetting	NA	NA	NA	NA	NA	NA	NA	NA	NA
Solid Flight Auger	NA	NA	NA	NA	NA	NA	NA	NA	NA
Hollow Stem Auger	NA	NA	NA	NA	NA	NA	NA	NA	NA
Mud Rotary	NA	NA	NA	NA	NA	NA	NA	NA	NA
Air Rotary	NA	NA	NA	NA	NA	NA	NA	NA	NA
Air Rotary with Casing Hammer	9	8	10	7	10	10	10	10	74
Dual Wall Rotary	10	10	9	4	10	10	9	8	70
Cable Tool	9	7	6	10	6	9	10	10	67

EXPLANATORY NOTES:

1. Unconsolidated formations, predominantly saturated, with saturation exerting significant influence on the choice of drilling technology.
2. Borehole stability problems are potentially severe
3. The anticipated use of the monitoring well prohibits the use of drilling fluid and additives in construction
4. Increasing diameter and depth favor cable tool and air rotary with casing hammer techniques
5. Jetting and mud rotary methods would require the addition of fluid.
6. When using cable-tool drilling in saturated formations, it is assumed that no drilling fluid needs to be added in permeable materials and that small volumes of drilling fluid are permissible in less permeable materials.

MATRIX NUMBER 16

General Hydrogeologic Conditions & Well Design Requirements

Unconsolidated; saturated; invasion of formation by drilling fluid not permitted; casing diameter 4 to 8 inches; total well depth 0 to 15 feet.

DRILLING METHODS / CRITERIA FOR EVALUATION OF DRILLING METHODS	Versatility of Drilling Method	Sample Reliability	Relative Drilling Cost	Availability of Drilling Equipment	Relative Time Required for Well Installation and Development	Ability of Drilling Technology to Preserve Natural Conditions	Ability to Install Design Diameter of Well	Relative Ease of Well Completion and Development	TOTAL
Hand Auger	NA	NA	NA	NA	NA	NA	NA	NA	NA
Driving	NA	NA	NA	NA	NA	NA	NA	NA	NA
Jetting	NA	NA	NA	NA	NA	NA	NA	NA	NA
Solid Flight Auger	4	5	10	10	8	1	4	4	46
Hollow Stem Auger	NA	NA	NA	NA	NA	NA	NA	NA	NA
Mud Rotary	NA	NA	NA	NA	NA	NA	NA	NA	NA
Air Rotary	NA	NA	NA	NA	NA	NA	NA	NA	NA
Air Rotary with Casing Hammer	8	8	8	8	8	8	8	8	64
Dual Wall Rotary	NA	NA	NA	NA	NA	NA	NA	NA	NA
Cable Tool	10	10	6	8	10	10	10	10	74

EXPLANATORY NOTES:

1. Unconsolidated formations, predominantly saturated, with saturation exerting significant influence on the choice of drilling technology
2. Borehole stability problems are potentially severe, so open-hole completion (i.e., solid-flight auger) may not be possible.
3. The anticipated use of the monitoring well prohibits the use of drilling fluid and additives in construction.
4. Maximum casing diameter exceeds practical equipment capability except for cable tool, air rotary with casing hammer and possibly solid-flight augers.
5. Jetting and mud rotary methods would require the addition of fluid.
6. When using cable-tool drilling in saturated formations, it is assumed that no drilling fluid needs to be added in permeable materials and that small volumes of drilling fluid are permissible in less permeable materials.

MATRIX NUMBER 17

General Hydrogeologic Conditions & Well Design Requirements

Unconsolidated; saturated; invasion of formation by drilling fluid not permitted; casing diameter 4 to 8 inches; total well depth 15 to 150 feet.

DRILLING METHODS / CRITERIA FOR EVALUATION OF DRILLING METHODS	Versatility of Drilling Method	Sample Reliability	Relative Drilling Cost	Availability of Drilling Equipment	Relative Time Required for Well Installation and Development	Ability of Drilling Technology to Preserve Natural Conditions	Ability to Install Design Diameter of Well	Relative Ease of Well Completion and Development	TOTAL
Hand Auger	NA	NA	NA	NA	NA	NA	NA	NA	NA
Driving	NA	NA	NA	NA	NA	NA	NA	NA	NA
Jetting	NA	NA	NA	NA	NA	NA	NA	NA	NA
Solid Flight Auger	NA	NA	NA	NA	NA	NA	NA	NA	NA
Hollow Stem Auger	NA	NA	NA	NA	NA	NA	NA	NA	NA
Mud Rotary	NA	NA	NA	NA	NA	NA	NA	NA	NA
Air Rotary	NA	NA	NA	NA	NA	NA	NA	NA	NA
Air Rotary with Casing Hammer	NA	NA	NA	NA	NA	NA	NA	NA	NA
Dual Wall Rotary	NA	NA	NA	NA	NA	NA	NA	NA	NA
Cable Tool	10	10	10	10	10	10	10	10	80

EXPLANATORY NOTES:

1. Unconsolidated formations, predominantly saturated, with saturation exerting significant influence on the choice of drilling technology.
2. Borehole stability problems are potentially severe.
3. The anticipated use of the monitoring well prohibits the use of drilling fluid and additives in construction.
4. Maximum diameter requiring 12-inch borehole exceeds practical equipment capability for depth range except for cable tool methods.
5. Jetting and mud rotary methods would require the addition of fluids.
6. When using cable-tool drilling in saturated formations, it is assumed that no drilling fluid needs to be added in permeable materials and that small volumes of drilling fluid are permissible in less permeable materials.

MATRIX NUMBER 18

General Hydrogeologic Conditions & Well Design Requirements

Unconsolidated; saturated; invasion of formation by drilling fluid not permitted; casing diameter 4 to 8 inches; total well depth greater than 150 feet.

DRILLING METHODS / CRITERIA FOR EVALUATION OF DRILLING METHODS	Versatility of Drilling Method	Sample Reliability	Relative Drilling Cost	Availability of Drilling Equipment	Relative Time Required for Well Installation and Development	Ability of Drilling Technology to Preserve Natural Conditions	Ability to Install Design Diameter of Well	Relative Ease of Well Completion and Development	TOTAL
Hand Auger	NA	NA	NA	NA	NA	NA	NA	NA	NA
Driving	NA	NA	NA	NA	NA	NA	NA	NA	NA
Jetting	NA	NA	NA	NA	NA	NA	NA	NA	NA
Solid Flight Auger	NA	NA	NA	NA	NA	NA	NA	NA	NA
Hollow Stem Auger	NA	NA	NA	NA	NA	NA	NA	NA	NA
Mud Rotary	NA	NA	NA	NA	NA	NA	NA	NA	NA
Air Rotary	NA	NA	NA	NA	NA	NA	NA	NA	NA
Air Rotary with Casing Hammer	NA	NA	NA	NA	NA	NA	NA	NA	NA
Dual Wall Rotary	NA	NA	NA	NA	NA	NA	NA	NA	NA
Cable Tool	10	10	10	10	10	10	10	10	80

EXPLANATORY NOTES:

1 Unconsolidated formations, predominantly saturated, with saturation exerting significant influence on the choice of drilling technology
2 Borehole stability problems are potentially severe.
3. The anticipated use of the monitoring well prohibits the use of drilling fluid and additives in construction.
4 Maximum diameter requiring 12-inch borehole exceeds practical equipment capability for depth range except for cable tool methods.
5 Jetting and mud rotary methods would require the addition of fluids.
6. When using cable-tool drilling in saturated formations, it is assumed that no drilling fluid needs to be added in permeable materials and that small volumes of drilling fluid are permissible in less permeable materials.

MATRIX NUMBER 19

General Hydrogeologic Conditions & Well Design Requirements

Unconsolidated; unsaturated; invasion of formation by drilling fluid permitted; casing diameter 2 inches or less; total well depth 10 to 15 feet.

DRILLING METHODS / CRITERIA FOR EVALUATION OF DRILLING METHODS	Versatility of Drilling Method	Sample Reliability	Relative Drilling Cost	Availability of Drilling Equipment	Relative Time Required for Well Installation and Development	Ability of Drilling Technology to Preserve Natural Conditions	Ability to Install Design Diameter of Well	Relative Ease of Well Completion and Development	TOTAL
Hand Auger	4	5	9	10	5	9	6	6	54
Driving	7	1	10	10	6	5	1	4	44
Jetting	3	1	8	8	5	1	1	5	32
Solid Flight Auger	8	10	10	9	10	8	10	5	70
Hollow Stem Auger	10	10	10	9	10	10	10	10	79
Mud Rotary	8	10	7	10	8	4	10	5	62
Air Rotary	5	5	8	8	8	7	8	4	53
Air Rotary with Casing Hammer	9	8	6	4	3	9	10	10	59
Dual Wall Rotary	9	9	6	1	3	9	10	10	57
Cable Tool	6	10	3	7	2	9	10	7	54

EXPLANATORY NOTES:

1. Unconsolidated formations, predominantly unsaturated, with monitoring conducted in individual, relatively isolated, saturated zones. Drilling is through primarily unsaturated material, but completion is in a saturated zone.
2. Borehole stability problems vary from slight (e.g., dense, silt/clay) to severe (e.g., coarse gravel and boulders).
3. The anticipated use of the monitoring well permits the use of drilling fluid and additives in construction.

MATRIX NUMBER 20

General Hydrogeologic Conditions & Well Design Requirements

Unconsolidated; unsaturated; invasion of formation by drilling fluid permitted; casing diameter 2 inches or less; total well depth 15 to 150 feet.

DRILLING METHODS / CRITERIA FOR EVALUATION OF DRILLING METHODS	Versatility of Drilling Method	Sample Reliability	Relative Drilling Cost	Availability of Drilling Equipment	Relative Time Required for Well Installation and Development	Ability of Drilling Technology to Preserve Natural Conditions	Ability to Install Design Diameter of Well	Relative Ease of Well Completion and Development	TOTAL
Hand Auger	NA	NA	NA	NA	NA	NA	NA	NA	NA
Driving	1	1	7	10	6	5	1	4	35
Jetting	1	1	4	10	5	1	1	1	24
Solid Flight Auger	8	10	10	9	10	8	9	5	69
Hollow Stem Auger	9	10	10	9	10	10	9	9	76
Mud Rotary	10	10	10	10	8	4	10	5	67
Air Rotary	7	5	8	8	8	7	9	4	56
Air Rotary with Casing Hammer	10	8	6	4	7	9	10	10	64
Dual Wall Rotary	10	9	6	1	6	9	10	10	61
Cable Tool	9	10	3	7	2	9	10	7	57

EXPLANATORY NOTES:

1. Unconsolidated formations, predominantly unsaturated, with monitoring conducted in individual, relatively isolated, saturated zones. Drilling is through primarily unsaturated material, but completion is in a saturated zone.
2. Borehole stability problems vary from slight (e.g., dense, silt/clay) to servere (e.g., coarse gravel and boulders).
3. The anticipated use of the monitoring well permits the use of drilling fluid and additives in construction.
4. *Solid-flight and hollow-stem augers are favored to the limit of their depth capability.*

MATRIX NUMBER 21

General Hydrogeologic Conditions & Well Design Requirements

Unconsolidated; unsaturated; invasion of formation by drilling fluid permitted; casing diameter 2 inches or less; total well depth greater than 150 feet.

DRILLING METHODS / CRITERIA FOR EVALUATION OF DRILLING METHODS	Versatility of Drilling Method	Sample Reliability	Relative Drilling Cost	Availability of Drilling Equipment	Relative Time Required for Well Installation and Development	Ability of Drilling Technology to Preserve Natural Conditions	Ability to Install Design Diameter of Well	Relative Ease of Well Completion and Development	TOTAL
Hand Auger	NA	NA	NA	NA	NA	NA	NA	NA	NA
Driving	NA	NA	NA	NA	NA	NA	NA	NA	NA
Jetting	NA	NA	NA	NA	NA	NA	NA	NA	NA
Solid Flight Auger	NA	NA	NA	NA	NA	NA	NA	NA	NA
Hollow Stem Auger	NA	NA	NA	NA	NA	NA	NA	NA	NA
Mud Rotary	10	2	10	10	10	4	10	5	61
Air Rotary	5	5	8	8	7	8	10	4	55
Air Rotary with Casing Hammer	9	9	6	4	8	9	10	10	65
Dual Wall Rotary	10	10	6	1	8	10	10	9	64
Cable Tool	9	5	5	7	3	8	10	7	54

EXPLANATORY NOTES:

1. Unconsolidated formations, predominantly unsaturated, with monitoring conducted in individual, relatively isolated, saturated zones. Drilling is through primarily unsaturated material, but completion is in a saturated zone.
2. Borehole stability problems vary from slight (e.g., dense, silt/clay) to servere (e.g., coarse gravel and boulders).
3. The anticipated use of the monitoring well permits the use of drilling fluid and additives in construction.
4. Dual-wall air completion is through the bit.
5. Air rotary with casing hammer and dual-wall air methods become relatively more advantageous under these conditions.

MATRIX NUMBER 22

General Hydrogeologic Conditions & Well Design Requirements

Unconsolidated; unsaturated; invasion of formation by drilling fluid permitted; casing diameter 2 to 4 inches; total well depth 0 to 15 feet.

DRILLING METHODS / CRITERIA FOR EVALUATION OF DRILLING METHODS	Versatility of Drilling Method	Sample Reliability	Relative Drilling Cost	Availability of Drilling Equipment	Relative Time Required for Well Installation and Development	Ability of Drilling Technology to Preserve Natural Conditions	Ability to Install Design Diameter of Well	Relative Ease of Well Completion and Development	TOTAL
Hand Auger	NA	NA	NA	NA	NA	NA	NA	NA	NA
Driving	1	1	10	10	5	5	1	4	37
Jetting	1	1	4	10	5	1	1	1	24
Solid Flight Auger	8	10	10	9	10	8	10	5	70
Hollow Stem Auger	10	10	10	9	10	10	10	10	79
Mud Rotary	8	10	7	10	8	4	10	5	62
Air Rotary	5	5	8	8	8	7	8	4	53
Air Rotary with Casing Hammer	9	8	5	4	5	9	10	10	60
Dual Wall Rotary	9	9	6	1	5	9	8	10	57
Cable Tool	8	10	3	7	5	9	10	8	60

EXPLANATORY NOTES:

1. Unconsolidated formations, predominantly unsaturated, with monitoring conducted in individual, relatively isolated, saturated zones. Drilling is through primarily unsaturated material, but completion is in a saturated zone.
2. Borehole stability problems vary from slight (e.g., dense, silt/clay) to servere (e.g., coarse gravel and boulders).
3. The anticipated use of the monitoring well permits the use of drilling fluid and additives in construction.
4. Solid flight auger methods require open hole completion, which may or may not be feasible.

MATRIX NUMBER 23

General Hydrogeologic Conditions & Well Design Requirements

Unconsolidated; unsaturated; invasion of formation by drilling fluid permitted; casing diameter 2 to 4 inches; total well depth 15 to 150 feet.

DRILLING METHODS / CRITERIA FOR EVALUATION OF DRILLING METHODS	Versatility of Drilling Method	Sample Reliability	Relative Drilling Cost	Availability of Drilling Equipment	Relative Time Required for Well Installation and Development	Ability of Drilling Technology to Preserve Natural Conditions	Ability to Install Design Diameter of Well	Relative Ease of Well Completion and Development	TOTAL
Hand Auger	NA	NA	NA	NA	NA	NA	NA	NA	NA
Driving	1	1	1	10	2	5	1	4	25
Jetting	1	1	1	10	3	1	1	1	19
Solid Flight Auger	3	10	10	9	8	8	6	5	59
Hollow Stem Auger	7	10	10	9	10	10	8	8	72
Mud Rotary	10	10	10	10	9	4	10	5	68
Air Rotary	5	5	8	8	8	7	6	4	51
Air Rotary with Casing Hammer	10	8	6	4	8	9	10	10	65
Dual Wall Rotary	10	9	6	1	8	9	10	9	62
Cable Tool	9	10	4	7	7	9	10	10	66

EXPLANATORY NOTES:

1. Unconsolidated formations, predominantly unsaturated, with monitoring conducted in individual, relatively isolated, saturated zones. Drilling is through primarily unsaturated material, but completion is in a saturated zone.
2. Borehole stability problems vary from slight (e.g., dense, silt/clay) to servere (e.g., coarse gravel and boulders).
3. The anticipated use of the monitoring well permits the use of drilling fluid and additives in construction.
4. Solid flight augers require open hole completion, which may or may not be feasible.

MATRIX NUMBER 24

General Hydrogeologic Conditions & Well Design Requirements

Unconsolidated; unsaturated; invasion of formation by drilling fluid permitted; casing diameter 2 to 4 inches; total well depth greater than 150 feet.

DRILLING METHODS / CRITERIA FOR EVALUATION OF DRILLING METHODS	Versatility of Drilling Method	Sample Reliability	Relative Drilling Cost	Availability of Drilling Equipment	Relative Time Required for Well Installation and Development	Ability of Drilling Technology to Preserve Natural Conditions	Ability to Install Design Diameter of Well	Relative Ease of Well Completion and Development	TOTAL
Hand Auger	NA	NA	NA	NA	NA	NA	NA	NA	NA
Driving	NA	NA	NA	NA	NA	NA	NA	NA	NA
Jetting	NA	NA	NA	NA	NA	NA	NA	NA	NA
Solid Flight Auger	NA	NA	NA	NA	NA	NA	NA	NA	NA
Hollow Stem Auger	NA	NA	NA	NA	NA	NA	NA	NA	NA
Mud Rotary	9	1	10	10	9	4	10	5	58
Air Rotary	5	3	10	8	10	8	10	4	58
Air Rotary with Casing Hammer	9	9	6	4	8	9	10	10	65
Dual Wall Rotary	10	10	6	1	10	10	10	8	65
Cable Tool	9	5	4	7	3	8	10	10	56

EXPLANATORY NOTES:

1. Unconsolidated formations, predominantly unsaturated, with monitoring conducted in individual, relatively isolated, saturated zones. Drilling is through primarily unsaturated material, but completion is in a saturated zone.
2. Borehole stability problems vary from slight (e.g., dense, silt/clay) to severe (e.g., coarse gravel and boulders).
3. The anticipated use of the monitoring well permits the use of drilling fluid and additives in construction.
4. Air rotary method requires generally very difficult open-hole completion. The borehole may, however, be stabilized with fluid after drilling is complete.

MATRIX NUMBER 25

General Hydrogeologic Conditions & Well Design Requirements

Unconsolidated; unsaturated; invasion of formation by drilling fluid permitted; casing diameter 4 to 8 inches; total well depth 0 to 15 feet.

DRILLING METHODS / CRITERIA FOR EVALUATION OF DRILLING METHODS	Versatility of Drilling Method	Sample Reliability	Relative Drilling Cost	Availability of Drilling Equipment	Relative Time Required for Well Installation and Development	Ability of Drilling Technology to Preserve Natural Conditions	Ability to Install Design Diameter of Well	Relative Ease of Well Completion and Development	TOTAL
Hand Auger	NA	NA	NA	NA	NA	NA	NA	NA	NA
Driving	NA	NA	NA	NA	NA	NA	NA	NA	NA
Jetting	NA	NA	NA	NA	NA	NA	NA	NA	NA
Solid Flight Auger	4	8	10	9	10	8	7	4	60
Hollow Stem Auger	7	10	10	9	9	8	7	4	64
Mud Rotary	10	10	7	10	8	5	10	3	63
Air Rotary	5	5	9	8	8	4	5	4	48
Air Rotary with Casing Hammer	8	7	6	4	8	10	10	10	63
Dual Wall Rotary	NA	NA	NA	NA	NA	NA	NA	NA	NA
Cable Tool	8	10	3	7	4	10	10	9	61

EXPLANATORY NOTES:

1. Unconsolidated formations, predominantly unsaturated, with monitoring conducted in individual, relatively isolated, saturated zones. Drilling is through primarily unsaturated material, but completion is in a saturated zone.
2. Borehole stability problems vary from slight (e.g., dense, silt/clay) to severe (e.g., coarse gravel and boulders).
3. The anticipated use of the monitoring well permits the use of drilling fluid and additives in construction.
4. Diameter requirements limit the equipment that can be utilized.
5. Solid-flight augers require very difficult open-hole completion. Hollow-stem auger technique requires open-hole completion for casing sizes greater than 4 inches.

MATRIX NUMBER 26

General Hydrogeologic Conditions & Well Design Requirements

Unconsolidated; unsaturated; invasion of formation by drilling fluid permitted; casing diameter 4 to 8 inches; total well depth 15 to 150 feet.

DRILLING METHODS / CRITERIA FOR EVALUATION OF DRILLING METHODS	Versatility of Drilling Method	Sample Reliability	Relative Drilling Cost	Availability of Drilling Equipment	Relative Time Required for Well Installation and Development	Ability of Drilling Technology to Preserve Natural Conditions	Ability to Install Design Diameter of Well	Relative Ease of Well Completion and Development	TOTAL
Hand Auger	NA	NA	NA	NA	NA	NA	NA	NA	NA
Driving	NA	NA	NA	NA	NA	NA	NA	NA	NA
Jetting	NA	NA	NA	NA	NA	NA	NA	NA	NA
Solid Flight Auger	NA	NA	NA	NA	NA	NA	NA	NA	NA
Hollow Stem Auger	NA	NA	NA	NA	NA	NA	NA	NA	NA
Mud Rotary	10	10	10	10	10	6	10	4	70
Air Rotary	NA	NA	NA	NA	NA	NA	NA	NA	NA
Air Rotary with Casing Hammer	NA	NA	NA	NA	NA	NA	NA	NA	NA
Dual Wall Rotary	NA	NA	NA	NA	NA	NA	NA	NA	NA
Cable Tool	8	10	6	7	5	10	10	10	66

EXPLANATORY NOTES:

1. Unconsolidated formations, predominantly unsaturated, with monitoring conducted in individual, relatively isolated, saturated zones. Drilling is through primarily unsaturated material, but completion is in a saturated zone.
2. Borehole stability problems vary from slight (e.g., dense, silt/clay) to servere (e.g., coarse gravel and boulders).
3. The anticipated use of the monitoring well permits the use of drilling fluid and additives in construction.
4. Diameter of borehole, and depth, eliminates most options.
5. Air rotary with casing hammer and dual-wall rotary are applicable for 4-inch casing.

MATRIX NUMBER 27

General Hydrogeologic Conditions & Well Design Requirements

Unconsolidated; unsaturated; invasion of formation by drilling fluid permitted; casing diameter 4 to 8 inches; total well depth greater than 150 feet.

DRILLING METHODS / CRITERIA FOR EVALUATION OF DRILLING METHODS	Versatility of Drilling Method	Sample Reliability	Relative Drilling Cost	Availability of Drilling Equipment	Relative Time Required for Well Installation and Development	Ability of Drilling Technology to Preserve Natural Conditions	Ability to Install Design Diameter of Well	Relative Ease of Well Completion and Development	TOTAL
Hand Auger	NA	NA	NA	NA	NA	NA	NA	NA	NA
Driving	NA	NA	NA	NA	NA	NA	NA	NA	NA
Jetting	NA	NA	NA	NA	NA	NA	NA	NA	NA
Solid Flight Auger	NA	NA	NA	NA	NA	NA	NA	NA	NA
Hollow Stem Auger	NA	NA	NA	NA	NA	NA	NA	NA	NA
Mud Rotary	10	8	10	10	10	6	8	4	66
Air Rotary	NA	NA	NA	NA	NA	NA	NA	NA	NA
Air Rotary with Casing Hammer	NA	NA	NA	NA	NA	NA	NA	NA	NA
Dual Wall Rotary	NA	NA	NA	NA	NA	NA	NA	NA	NA
Cable Tool	8	10	6	7	4	10	10	10	65

EXPLANATORY NOTES:

1. Unconsolidated formations, predominantly unsaturated, with monitoring conducted in individual, relatively isolated, saturated zones. Drilling is through primarily unsaturated material, but completion is in a saturated zone.
2. Borehole stability problems vary from slight (e.g., dense, silt/clay) to servere (e.g., coarse gravel and boulders).
3. The anticipated use of the monitoring well permits the use of drilling fluid and additives in construction.
4. Diameter of borehole , and depth, eliminates most options.

MATRIX NUMBER 28

General Hydrogeologic Conditions & Well Design Requirements

Unconsolidated; unsaturated; invasion of formation by drilling fluid not permitted; casing diameter 2 inches or less; total well depth 0 to 15 feet.

DRILLING METHODS / CRITERIA FOR EVALUATION OF DRILLING METHODS	Versatility of Drilling Method	Sample Reliability	Relative Drilling Cost	Availability of Drilling Equipment	Relative Time Required for Well Installation and Development	Ability of Drilling Technology to Preserve Natural Conditions	Ability to Install Design Diameter of Well	Relative Ease of Well Completion and Development	TOTAL
Hand Auger	4	5	9	10	5	9	6	6	54
Driving	7	1	10	10	6	5	1	4	44
Jetting	NA	NA	NA	NA	NA	NA	NA	NA	NA
Solid Flight Auger	8	10	10	9	10	8	10	5	70
Hollow Stem Auger	8	10	10	9	10	8	10	10	75
Mud Rotary	NA	NA	NA	NA	NA	NA	NA	NA	NA
Air Rotary	5	5	8	8	8	7	8	4	53
Air Rotary with Casing Hammer	9	8	6	4	3	9	10	10	59
Dual Wall Rotary	10	9	6	1	8	10	10	10	64
Cable Tool	NA	NA	NA	NA	NA	NA	NA	NA	NA

EXPLANATORY NOTES:

1. Unconsolidated formations, predominantly unsaturated, with monitoring conducted in individual, relatively isolated, saturated zones. Drilling is through primarily unsaturated material, but completion is in a saturated zone.
2. Borehole stability problems vary from slight (e.g. dense, silt/clay) to severe (e.g. coarse gravel and boulders).
3. The anticipated use of the monitoring well prohibits the use of drilling fluid and additives in construction.
4. Jetting, mud rotary and cable tool methods would require the addition of fluid.
5. Air rotary with casing hammer requires driving 6-inch or greater diameter casing and completion by pullback.
6. Air rotary, hand auger and solid-flight auger completion possible only if unsupported borehole is stable.

MATRIX NUMBER 29

General Hydrogeologic Conditions & Well Design Requirements

Unconsolidated; unsaturated; invasion of formation by drilling fluid not permitted; casing diameter 2 inches or less; total well depth 15 to 150 feet.

DRILLING METHODS / CRITERIA FOR EVALUATION OF DRILLING METHODS	Versatility of Drilling Method	Sample Reliability	Relative Drilling Cost	Availability of Drilling Equipment	Relative Time Required for Well Installation and Development	Ability of Drilling Technology to Preserve Natural Conditions	Ability to Install Design Diameter of Well	Relative Ease of Well Completion and Development	TOTAL
Hand Auger	NA	NA	NA	NA	NA	NA	NA	NA	NA
Driving	1	1	7	10	6	5	1	4	35
Jetting	NA	NA	NA	NA	NA	NA	NA	NA	NA
Solid Flight Auger	9	10	10	10	9	8	9	5	70
Hollow Stem Auger	10	10	10	10	10	10	9	10	79
Mud Rotary	NA	NA	NA	NA	NA	NA	NA	NA	NA
Air Rotary	7	5	8	8	8	7	9	4	56
Air Rotary with Casing Hammer	10	8	6	4	6	9	10	10	63
Dual Wall Rotary	10	9	6	1	9	9	10	10	64
Cable Tool	NA	NA	NA	NA	NA	NA	NA	NA	NA

EXPLANATORY NOTES:

1. Unconsolidated formations, predominantly unsaturated, with monitoring conducted in individual, relatively isolated, saturated zones. Drilling is through primarily unsaturated material, but completion is in a saturated zone.
2. Borehole stability problems vary from slight (e.g. dense, silt/clay) to severe (e.g. coarse gravel and boulders).
3. The anticipated use of the monitoring well prohibits the use of drilling fluid and additives in construction.
4. Jetting, mud rotary and cable tool methods would require the addition of fluid.
5. Air rotary with casing hammer requires driving 6-inch or greater diameter casing and completion by pullback.
6. Air rotary and solid-flight auger completion possible only if unsupported borehole is stable.

MATRIX NUMBER 30

General Hydrogeologic Conditions & Well Design Requirements

Unconsolidated; unsaturated; invasion of formation by drilling fluid not permitted; casing diameter 2 inches or less; total well depth greater than 150 feet.

DRILLING METHODS / CRITERIA FOR EVALUATION OF DRILLING METHODS	Versatility of Drilling Method	Sample Reliability	Relative Drilling Cost	Availability of Drilling Equipment	Relative Time Required for Well Installation and Development	Ability of Drilling Technology to Preserve Natural Conditions	Ability to Install Design Diameter of Well	Relative Ease of Well Completion and Development	TOTAL
Hand Auger	NA	NA	NA	NA	NA	NA	NA	NA	NA
Driving	NA	NA	NA	NA	NA	NA	NA	NA	NA
Jetting	NA	NA	NA	NA	NA	NA	NA	NA	NA
Solid Flight Auger	NA	NA	NA	NA	NA	NA	NA	NA	NA
Hollow Stem Auger	NA	NA	NA	NA	NA	NA	NA	NA	NA
Mud Rotary	NA	NA	NA	NA	NA	NA	NA	NA	NA
Air Rotary	7	7	10	10	10	7	10	4	65
Air Rotary with Casing Hammer	10	9	8	8	9	9	10	10	73
Dual Wall Rotary	10	10	8	4	9	10	10	8	69
Cable Tool	NA	NA	NA	NA	NA	NA	NA	NA	NA

EXPLANATORY NOTES:

1. Unconsolidated formations, predominantly unsaturated, with monitoring conducted in individual, relatively isolated, saturated zones. Drilling is through primarily unsaturated material, but completion is in a saturated zone.
2. Borehole stability problems vary from slight (e.g. dense, silt/clay) to severe (e.g. coarse gravel and boulders).
3. The anticipated use of the monitoring well prohibits the use of drilling fluid and additives in construction.
4. The depth requirement and the decision not to utilize drilling fluid limit equipment options.
5. Jetting, mud rotary and cable tool methods would require the addition of fluid.
6. Air rotary with casing hammer requires driving 6-inch or greater diameter casing and completion by pullback.
7. Air rotary completion possible only if unsupported borehole is stable.

MATRIX NUMBER 31

General Hydrogeologic Conditions & Well Design Requirements

Unconsolidated; unsaturated; invasion of formation by drilling fluid not permitted; casing diameter 2 to 4 inches; total well depth 0 to 15 feet.

DRILLING METHODS / CRITERIA FOR EVALUATION OF DRILLING METHODS	Versatility of Drilling Method	Sample Reliability	Relative Drilling Cost	Availability of Drilling Equipment	Relative Time Required for Well Installation and Development	Ability of Drilling Technology to Preserve Natural Conditions	Ability to Install Design Diameter of Well	Relative Ease of Well Completion and Development	TOTAL
Hand Auger	NA	NA	NA	NA	NA	NA	NA	NA	NA
Driving	1	1	10	10	5	5	1	4	37
Jetting	NA	NA	NA	NA	NA	NA	NA	NA	NA
Solid Flight Auger	8	10	10	10	10	8	7	5	68
Hollow Stem Auger	10	10	10	10	10	10	9	8	77
Mud Rotary	NA	NA	NA	NA	NA	NA	NA	NA	NA
Air Rotary	5	5	8	8	8	7	8	4	53
Air Rotary with Casing Hammer	9	8	6	4	6	9	10	10	62
Dual Wall Rotary	9	9	6	1	6	9	9	10	59
Cable Tool	NA	NA	NA	NA	NA	NA	NA	NA	NA

EXPLANATORY NOTES:

1. Unconsolidated formations, predominantly unsaturated, with monitoring conducted in individual, relatively isolated, saturated zones. Drilling is through primarily unsaturated material, but completion is in a saturated zone.
2. Borehole stability problems vary from slight (e.g. dense, silt/clay) to severe (e.g. coarse gravel and boulders).
3. The anticipated use of the monitoring well prohibits the use of drilling fluid and additives in construction.
4. Jetting, mud rotary and cable tool methods would require the addition of fluid.
5. Air rotary with casing hammer requires driving 8-inch or greater casing and completion by pullback.
6. Air rotary and solid-flight auger completion possible only if unsupported borehole is stable.

MATRIX NUMBER 32

General Hydrogeologic Conditions & Well Design Requirements

Unconsolidated; unsaturated; invasion of formation by drilling fluid not permitted; casing diameter 2 to 4 inches; total well depth 15 to 150 feet.

DRILLING METHODS / CRITERIA FOR EVALUATION OF DRILLING METHODS	Versatility of Drilling Method	Sample Reliability	Relative Drilling Cost	Availability of Drilling Equipment	Relative Time Required for Well Installation and Development	Ability of Drilling Technology to Preserve Natural Conditions	Ability to Install Design Diameter of Well	Relative Ease of Well Completion and Development	TOTAL
Hand Auger	NA	NA	NA	NA	NA	NA	NA	NA	NA
Driving	1	1	1	10	2	5	1	4	25
Jetting	NA	NA	NA	NA	NA	NA	NA	NA	NA
Solid Flight Auger	3	10	10	10	8	8	6	3	58
Hollow Stem Auger	7	10	10	10	10	10	8	8	73
Mud Rotary	NA	NA	NA	NA	NA	NA	NA	NA	NA
Air Rotary	5	5	8	8	8	7	8	3	52
Air Rotary with Casing Hammer	10	8	6	4	6	9	10	10	63
Dual Wall Rotary	10	9	6	1	6	9	8	3	52
Cable Tool	NA	NA	NA	NA	NA	NA	NA	NA	NA

EXPLANATORY NOTES:

1. Unconsolidated formations, predominantly unsaturated, with monitoring conducted in individual, relatively isolated, saturated zones. Drilling is through primarily unsaturated material, but completion is in a saturated zone.
2. Borehole stability problems vary from slight (e.g. dense, silt/clay) to severe (e.g. coarse gravel and boulders).
3. The anticipated use of the monitoring well prohibits the use of drilling fluid and additives in construction.
4. Jetting, mud rotary and cable tool methods would require the addition of fluid.
5. Air rotary with casing hammer requires driving 8-inch or greater casing and completion by pullback.
6. Air rotary and solid-flight auger completion possible only if unsupported borehole is stable.

MATRIX NUMBER 33

General Hydrogeologic Conditions & Well Design Requirements

Unconsolidated; unsaturated; invasion of formation by drilling fluid not permitted; casing diameter 2 to 4 inches; total well depth greater than 150 feet.

DRILLING METHODS / CRITERIA FOR EVALUATION OF DRILLING METHODS	Versatility of Drilling Method	Sample Reliability	Relative Drilling Cost	Availability of Drilling Equipment	Relative Time Required for Well Installation and Development	Ability of Drilling Technology to Preserve Natural Conditions	Ability to Install Design Diameter of Well	Relative Ease of Well Completion and Development	TOTAL
Hand Auger	NA	NA	NA	NA	NA	NA	NA	NA	NA
Driving	NA	NA	NA	NA	NA	NA	NA	NA	NA
Jetting	NA	NA	NA	NA	NA	NA	NA	NA	NA
Solid Flight Auger	NA	NA	NA	NA	NA	NA	NA	NA	NA
Hollow Stem Auger	NA	NA	NA	NA	NA	NA	NA	NA	NA
Mud Rotary	NA	NA	NA	NA	NA	NA	NA	NA	NA
Air Rotary	5	5	10	10	10	5	10	5	60
Air Rotary with Casing Hammer	9	9	6	6	8	10	10	10	68
Dual Wall Rotary	10	10	6	4	10	10	10	10	70
Cable Tool	NA	NA	NA	NA	NA	NA	NA	NA	NA

EXPLANATORY NOTES:

1. Unconsolidated formations, predominantly unsaturated, with monitoring conducted in individual, relatively isolated, saturated zones. Drilling is through primarily unsaturated material, but completion is in a saturated zone.
2. Borehole stability problems vary from slight (e.g. dense, silt/clay) to severe (e.g. coarse gravel and boulders).
3. The anticipated use of the monitoring well prohibits the use of drilling fluid and additives in construction.
4. No drilling fluid, increasing depth and diameter requirements eliminate many options.
5. Air rotary with casing hammer requires driving 8-inch or greater casing and completion by pullback.

MATRIX NUMBER 34

General Hydrogeologic Conditions & Well Design Requirements

Unconsolidated; unsaturated; invasion of formation by drilling fluid not permitted; casing diameter 4 to 8 inches; total well depth 0 to 15 feet.

DRILLING METHODS / CRITERIA FOR EVALUATION OF DRILLING METHODS	Versatility of Drilling Method	Sample Reliability	Relative Drilling Cost	Availability of Drilling Equipment	Relative Time Required for Well Installation and Development	Ability of Drilling Technology to Preserve Natural Conditions	Ability to Install Design Diameter of Well	Relative Ease of Well Completion and Development	TOTAL
Hand Auger	NA	NA	NA	NA	NA	NA	NA	NA	NA
Driving	NA	NA	NA	NA	NA	NA	NA	NA	NA
Jetting	NA	NA	NA	NA	NA	NA	NA	NA	NA
Solid Flight Auger	NA	NA	NA	NA	NA	NA	NA	NA	NA
Hollow Stem Auger	NA	NA	NA	NA	NA	NA	NA	NA	NA
Mud Rotary	NA	NA	NA	NA	NA	NA	NA	NA	NA
Air Rotary	6	5	10	10	10	6	6	5	58
Air Rotary with Casing Hammer	10	10	6	6	9	10	10	10	71
Dual Wall Rotary	NA	NA	NA	NA	NA	NA	NA	NA	NA
Cable Tool	NA	NA	NA	NA	NA	NA	NA	NA	NA

EXPLANATORY NOTES:

1. Unconsolidated formations, predominantly unsaturated, with monitoring conducted in individual, relatively isolated, saturated zones. Drilling is through primarily unsaturated material, but completion is in a saturated zone.
2. Borehole stability problems vary from slight (e.g. dense, silt/clay) to severe (e.g. coarse gravel and boulders).
3. The anticipated use of the monitoring well prohibits the use of drilling fluid and additives in construction.
4. Diameter and no drilling fluid minimizes options
5. Jetting, mud rotary and cable tool methods would require the addition of fluid.
6. Air rotary with casing hammer requires driving 12-inch or greater diameter casing and completion by pullback.
7. Air rotary completion possible only if unsupported borehole is stable.

MATRIX NUMBER 35

General Hydrogeologic Conditions & Well Design Requirements

Unconsolidated; unsaturated; invasion of formation by drilling fluid not permitted; casing diameter 4 to 8 inches; total well depth 15 to 150 feet.

DRILLING METHODS / CRITERIA FOR EVALUATION OF DRILLING METHODS	Versatility of Drilling Method	Sample Reliability	Relative Drilling Cost	Availability of Drilling Equipment	Relative Time Required for Well Installation and Development	Ability of Drilling Technology to Preserve Natural Conditions	Ability to Install Design Diameter of Well	Relative Ease of Well Completion and Development	TOTAL
Hand Auger	NA	NA	NA	NA	NA	NA	NA	NA	NA
Driving	NA	NA	NA	NA	NA	NA	NA	NA	NA
Jetting	NA	NA	NA	NA	NA	NA	NA	NA	NA
Solid Flight Auger	NA	NA	NA	NA	NA	NA	NA	NA	NA
Hollow Stem Auger	NA	NA	NA	NA	NA	NA	NA	NA	NA
Mud Rotary	NA	NA	NA	NA	NA	NA	NA	NA	NA
Air Rotary	10	10	10	10	10	10	10	10	80
Air Rotary with Casing Hammer	NA	NA	NA	NA	NA	NA	NA	NA	NA
Dual Wall Rotary	NA	NA	NA	NA	NA	NA	NA	NA	NA
Cable Tool	NA	NA	NA	NA	NA	NA	NA	NA	NA

EXPLANATORY NOTES:

1. Unconsolidated formations, predominantly unsaturated, with monitoring conducted in individual, relatively isolated, saturated zones Drilling is through primarily unsaturated material, but completion is in a saturated zone
2. Borehole stability problems vary from slight (e g dense, silt/clay) to severe (e.g. coarse gravel and boulders).
3. The anticipated use of the monitoring well prohibits the use of drilling fluid and additives in construction.
4. No drilling fluid, depth and diameter requirements have eliminated options
5. Oversize drillpipe and/or auxiliary air probably required.
6. Jetting, mud rotary and cable tool methods would require the addition of fluid.
7. Air rotary completion possible only if unsupported borehole is stable.
8. Air rotary with casing hammer unlikely to penetrate to specified depths with 12-inch diameter outer casing that is required for 8-inch diameter casing and screen completion.
9. If borehole is unstable, for 8-inch diameter casing there is no currently available method that can be used to fulfill the requirements as stated above. Therefore, fluid would be necessary to install the well and invasion-permitting matrices will apply.

MATRIX NUMBER 36

General Hydrogeologic Conditions & Well Design Requirements

Unconsolidated; unsaturated; invasion of formation by drilling fluid not permitted; casing diameter 4 to 8 inches; total well depth greater than 150 feet.

DRILLING METHODS / CRITERIA FOR EVALUATION OF DRILLING METHODS	Versatility of Drilling Method	Sample Reliability	Relative Drilling Cost	Availability of Drilling Equipment	Relative Time Required for Well Installation and Development	Ability of Drilling Technology to Preserve Natural Conditions	Ability to Install Design Diameter of Well	Relative Ease of Well Completion and Development	TOTAL
Hand Auger	NA	NA	NA	NA	NA	NA	NA	NA	NA
Driving	NA	NA	NA	NA	NA	NA	NA	NA	NA
Jetting	NA	NA	NA	NA	NA	NA	NA	NA	NA
Solid Flight Auger	NA	NA	NA	NA	NA	NA	NA	NA	NA
Hollow Stem Auger	NA	NA	NA	NA	NA	NA	NA	NA	NA
Mud Rotary	NA	NA	NA	NA	NA	NA	NA	NA	NA
Air Rotary	10	10	10	10	10	10	10	10	80
Air Rotary with Casing Hammer	NA	NA	NA	NA	NA	NA	NA	NA	NA
Dual Wall Rotary	NA	NA	NA	NA	NA	NA	NA	NA	NA
Cable Tool	NA	NA	NA	NA	NA	NA	NA	NA	NA

EXPLANATORY NOTES:

1. Unconsolidated formations, predominantly unsaturated, with monitoring conducted in individual, relatively isolated, saturated zones. Drilling is through primarily unsaturated material, but completion is in a saturated zone.
2. Borehole stability problems vary from slight (e.g. dense, silt/clay) to severe (e.g. coarse gravel and boulders).
3. The anticipated use of the monitoring well prohibits the use of drilling fluid and additives in construction.
4. No drilling fluid, depth and diameter requirements have eliminated options.
5. Oversize drillpipe and/or auxiliary air probably required.
6. Jetting, mud rotary and cable tool methods would require the addition of fluid.
7. Air rotary completion possible only if unsupported borehole is stable.
8. Air rotary with casing hammer unlikely to penetrate to specified depths with 12-inch diameter outer casing that is required for 8-inch diameter casing and screen completion.
9. If borehole is unstable, for 8-inch diameter casing there is no method that can be used to fulfill the requirements as stated above. Therefore, fluid would be necessary to install the well and invasion-permitting matrices will apply.

MATRIX NUMBER 37

General Hydrogeologic Conditions & Well Design Requirements

Consolidated; invasion of formation by drilling fluid permitted; casing diameter 4 inches or less.

DRILLING METHODS / CRITERIA FOR EVALUATION OF DRILLING METHODS	Versatility of Drilling Method	Sample Reliability	Relative Drilling Cost	Availability of Drilling Equipment	Relative Time Required for Well Installation and Development	Ability of Drilling Technology to Preserve Natural Conditions	Ability to Install Design Diameter of Well	Relative Ease of Well Completion and Development	TOTAL
Hand Auger	NA	NA	NA	NA	NA	NA	NA	NA	NA
Driving	NA	NA	NA	NA	NA	NA	NA	NA	NA
Jetting	NA	NA	NA	NA	NA	NA	NA	NA	NA
Solid Flight Auger	NA	NA	NA	NA	NA	NA	NA	NA	NA
Hollow Stem Auger	NA	NA	NA	NA	NA	NA	NA	NA	NA
Mud Rotary	7	6	8	10	8	7	10	7	63
Air Rotary	8	9	10	9	10	9	10	10	75
Air Rotary with Casing Hammer	NA	NA	NA	NA	NA	NA	NA	NA	NA
Dual Wall Rotary	10	10	7	1	10	10	10	10	68
Cable Tool	8	7	5	6	4	7	10	8	55

EXPLANATORY NOTES:

1. Consolidated formations, all types
2. The anticipated use of the monitoring well permits the use of drilling fluid and additives in construction.
3. Boreholes are expected to be sufficiently stable to permit open-hole completion.
4. Core sampling will improve the relative value of the mud rotary method.
5. Where dual-wall air is available it becomes an equally preferred method with air rotary.

MATRIX NUMBER 38

General Hydrogeologic Conditions & Well Design Requirements

Consolidated; invasion of formation by drilling fluid permitted; casing diameter 4 to 8 inches.

DRILLING METHODS / CRITERIA FOR EVALUATION OF DRILLING METHODS	Versatility of Drilling Method	Sample Reliability	Relative Drilling Cost	Availability of Drilling Equipment	Relative Time Required for Well Installation and Development	Ability of Drilling Technology to Preserve Natural Conditions	Ability to Install Design Diameter of Well	Relative Ease of Well Completion and Development	TOTAL
Hand Auger	NA	NA	NA	NA	NA	NA	NA	NA	NA
Driving	NA	NA	NA	NA	NA	NA	NA	NA	NA
Jetting	NA	NA	NA	NA	NA	NA	NA	NA	NA
Solid Flight Auger	NA	NA	NA	NA	NA	NA	NA	NA	NA
Hollow Stem Auger	NA	NA	NA	NA	NA	NA	NA	NA	NA
Mud Rotary	9	6	8	10	8	6	10	7	64
Air Rotary	8	10	10	9	10	10	10	10	77
Air Rotary with Casing Hammer	NA	NA	NA	NA	NA	NA	NA	NA	NA
Dual Wall Rotary	NA	NA	NA	NA	NA	NA	NA	NA	NA
Cable Tool	10	9	5	8	5	9	10	9	65

EXPLANATORY NOTES:

1. Consolidated formations, all types
2. The anticipated use of the monitoring well permits the use of drilling fluid and additives in construction.
3. Boreholes are expected to be sufficiently stable to permit open-hole completion.
4. Core sampling will improve the relative value of the mud rotary method.
5. Where dual-wall air is available it becomes an equally preferred method with air rotary, but borehole diameter is limited to approximately 10 inches.

MATRIX NUMBER 39

General Hydrogeologic Conditions & Well Design Requirements

Consolidated; invasion of formation by drilling fluid not permitted; casing diameter 4 inches or less.

DRILLING METHODS / CRITERIA FOR EVALUATION OF DRILLING METHODS	Versatility of Drilling Method	Sample Reliability	Relative Drilling Cost	Availability of Drilling Equipment	Relative Time Required for Well Installation and Development	Ability of Drilling Technology to Preserve Natural Conditions	Ability to Install Design Diameter of Well	Relative Ease of Well Completion and Development	TOTAL
Hand Auger	NA	NA	NA	NA	NA	NA	NA	NA	NA
Driving	NA	NA	NA	NA	NA	NA	NA	NA	NA
Jetting	NA	NA	NA	NA	NA	NA	NA	NA	NA
Solid Flight Auger	NA	NA	NA	NA	NA	NA	NA	NA	NA
Hollow Stem Auger	NA	NA	NA	NA	NA	NA	NA	NA	NA
Mud Rotary	NA	NA	NA	NA	NA	NA	NA	NA	NA
Air Rotary	8	8	10	10	10	8	10	10	74
Air Rotary with Casing Hammer	NA	NA	NA	NA	NA	NA	NA	NA	NA
Dual Wall Rotary	10	10	7	1	10	10	10	10	68
Cable Tool	NA	NA	NA	NA	NA	NA	NA	NA	NA

EXPLANATORY NOTES:

1. Consolidated formations, all types
2. The anticipated use of the monitoring well does not permit the use of drilling fluid and additives in construction.
3. Boreholes are expected to be sufficiently stable to permit open hole completion.
4. Both mud rotary and cable tool methods are potentially invasive, thereby reducing options to air drilling methods.
5. Air rotary may require extra air and/or special drill pipe.

MATRIX NUMBER 40

General Hydrogeologic Conditions & Well Design Requirements

Consolidated; invasion of formation by drilling fluid not permitted; casing diameter 4 to 8 inches.

DRILLING METHODS / CRITERIA FOR EVALUATION OF DRILLING METHODS	Versatility of Drilling Method	Sample Reliability	Relative Drilling Cost	Availability of Drilling Equipment	Relative Time Required for Well Installation and Development	Ability of Drilling Technology to Preserve Natural Conditions	Ability to Install Design Diameter of Well	Relative Ease of Well Completion and Development	TOTAL
Hand Auger	NA	NA	NA	NA	NA	NA	NA	NA	NA
Driving	NA	NA	NA	NA	NA	NA	NA	NA	NA
Jetting	NA	NA	NA	NA	NA	NA	NA	NA	NA
Solid Flight Auger	NA	NA	NA	NA	NA	NA	NA	NA	NA
Hollow Stem Auger	NA	NA	NA	NA	NA	NA	NA	NA	NA
Mud Rotary	NA	NA	NA	NA	NA	NA	NA	NA	NA
Air Rotary	10	10	10	10	10	10	10	10	80
Air Rotary with Casing Hammer	NA	NA	NA	NA	NA	NA	NA	NA	NA
Dual Wall Rotary	NA	NA	NA	NA	NA	NA	NA	NA	NA
Cable Tool	NA	NA	NA	NA	NA	NA	NA	NA	NA

EXPLANATORY NOTES:

1. Consolidated formations, all types
2. The anticipated use of the monitoring well does not permit the use of drilling fluid and additives in construction
3. Boreholes are expected to be sufficiently stable to permit open hole completion.
4. Both mud rotary and cable tool methods are potentially invasive, thereby reducing options to air drilling methods.
5. Air rotary may require extra air and/or special drill pipe.

Appendix C
(Supplement to Chapter 8)
Abandonment of Test Holes, Partially Completed Wells and Completed Wells
(American Water Works Association, 1984)

Section I.1 —General

The recommendations contained in this appendix pertain to wells and test holes in consolidated and unconsolidated formations. Each sealing job should be considered as an individual problem, and methods and materials should be determined only after carefully considering the objectives outlined in the standard.

Section I.2 — Wells in Unconsolidated Formations

Normally, abandoned wells extending only into consolidated formations near the surface and containing water under water-table conditions can be adequately sealed by filling with concrete, grout, neat cement, clay, or clay and sand. In the event that the water-bearing formation consists of coarse gravel and producing wells are located nearby, care must be taken to select sealing materials that will not affect the producing wells. Concrete may be used if the producing wells can be shut down for a sufficient time to allow the concrete to set. Clean, disinfected sand or gravel may also be used as fill material opposite the waterbearing formation. The remainder of the well, especially the upper portion, should be filled with clay, concrete, grout, or neat cement to exclude surface water. The latter method, using clay as the upper sealing material, is especially applicable to large diameter abandoned wells.

In gravel-packed, gravel-envelope, or other wells in which coarse material has been added around the inner casing to within 20 to 30 ft (6.1 to 9.1 m) of the surface, sealing outside the casing is very important. Sometimes this sealing may require removal of the gravel or perforation of the casing.

Section I.3 — Wells in Creviced Formations

Abandoned wells that penetrate limestone or other creviced or channelized rock formations lying immediately below the surface deposits should preferably be filled with concrete, grout, or neat cement to ensure permanence of the seal. The use of clay or sand in such wells is not desirable because fine-grained fill material may be displaced by the flow of water through crevices or channels. Alternate layers of coarse stone and concrete may be used for fill material through the water-producing horizon if limited vertical movement of water in the formation will not affect the quality or quantity of water in producing wells. Only concrete, neat cement, or grout should be used in this type of well. The portion of the well between a point 10 to 20 ft (3.0 to 6.1 m) below and a point 10 to 20 ft (3.0 to 6.1 m) above should be sealed and a plug of sealing material formed above the creviced formation. Clay or sand may be used to fill the upper part of the well to within 20ft (6.1 m) of ground level. The upper 20 ft (6.1 m) should be sealed with concrete or cement grout.

Section I.4 — Wells in Noncreviced Rock Formations

Abandoned wells encountering non-creviced sandstone or other water-bearing consolidated formations below the surface deposits may be satisfactorily sealed by filling the entire depth with clay, provided there is no movement of water in the well. Clean sand, disinfected if other producing wells are nearby, may also be used through the sandstone up to a point 10 to 20 ft (3.0 to 6.1 m) below the bottom of the casing. The upper portion of this type of well should be filled with concrete, neat cenent, grout or clay to provide an effective seal against entrance of surface water. If there is an appreciable amount of upward flow, pressure cementing or mudding may be advisable.

Section I.5 —Multiple Aquifer Wells

Some special problems may develop in sealing wells extending into more than one aquifer. These wells should be filled and sealed in such a way that exchange of water from one aquifer to another is prevented. If no appreciable movement of water is encountered, filling with concrete, neat cement, grout, or alternate layers of these materials and sand will prove satisfactory. When velocities are high, the procedures outlined in. Sec. I.6 are recommended. If alternate concrete plugs or bridges are used, they should be placed in known nonproducing horizons or, if locations of the nonproducing horizons are not known, at frequent intervals. Sometimes when the casing is not grouted or the formation is noncaving, it may be necessary to break, slit, or perforate the casing to fill any annular space on the outside.

Section I.6 — Wells with Artesian Flow

The sealing of abandoned wells that have a movement between aquifers or to the surface requires special attention. Frequently the movements of water may be sufficient to make sealing by gravity placement of concrete, cement grout, neat cement, clay or sand impractical. In, such wells, large stone aggregate (not more than one third of the diameter of the hole), lead wool, steel shavings, a well packer, or a wood or cast-lead plug or bridge will be needed to restrict the flow and thereby permit the gravity placement of sealing material above the formation producing the flow. If preshaped or precast plugs are used, they should be several times longer than the diameter of the well, to prevent tilting.

Since it is very important in wells of this type to prevent circulation between formations, or loss of water to the surfaces or to the annular space outside the casing, it is recommended that pressure cementing, using the minimum quantity of water that will permit handling, be used. The use of pressure mudding instead of this process is sometimes permissible.

In wells in which the hydrostatic head producing flow to the surface is low, the movement of water may be arrested by extending the well casing to an elevation above the artesian-pressure surface. Previously described sealing methods suitable to the geologic conditions can then be used.

Section I.7 — Sealing Materials

A number of materials that can be used for sealing wells satisfactorily, including concrete, cement grout, neat cement, clay, sand, or combinations of these materials, are mentioned in this appendix. Each material has certain characteristics and distinctive properties; therefore, one material may be especially suited for doing a particular job. The selection of the material must be based on the construction of the well, the nature of the formations penetrated, the material and equipment available, the location of the well with respect to possible sources of contamination, and the cost of doing the work.

Concrete is generally used for filling the upper part of the well or water-bearing formations, for plugging short sections of casings, or for filling large-diameter wells. Its use is cheaper than neat cement or grout, and it makes a stronger plug or seal. However, concrete will not penetrate seams, crevices, or interstices. Furthermore, if not properly placed, the aggregate is likely to separate from the cement.

Cement grout or neat cement and water are far superior for sealing small openings, for penetrating any annular space outside of casings, and for filling voids in the surrounding formation. When applied under pressure, they are strongly favored for sealing wells under artesian pressure or those encountering more than one aquifer. Neat cement is generally preferred to grout because it does not separate.

Clay, as a heavy mud-laden or special clay fluid applied under pressure, has most of the advantages of cement grout. Its use is preferred by some competent authorities particularly for sealing artesian wells. Others feel that it may, under some conditions, eventually be carried away into the surrounding formations.

Clay in a relatively dry state, clay and sand, or sand alone may be used advantageously as sealing materials, particularly under water-table conditions where diameters are large, depths are great, formations are caving, and there is no need for achieving penetration of openings in casings, liners, or formations, or for obtaining a watertight seal at any given spot.

Frequently combinations of these materials are necessary. The more expensive materials are used when strength, penetration, or watertightness are needed. The less expensive materials are used for the remainder of the well. Cement grout or neat cement is now being mixed with bentonite clays and various aggregates. Superior results and lower cost are claimed for such mixtures.

Reference

American Water Works Association, 1984. Appendix I: Abandonment of test holes, partially completed wells and completed wells; American Water Works Association Standard for Water Wells, American Water Works Association, Denver, Colorado, pp. 45-47.

Glossary

Abandonment

The complete sealing of a well or borehole with grout or other impermeable materials to restore the original hydrogeologic conditions and/or to prevent contamination of the aquifer.

Absorption

The penetration or apparent disappearance of molecules or ions of one or more substances into the interior of a solid or liquid. For example, in hydrated bentonite, the planar water that is held between the mica-like layers is the result of absorption (Ingersoll-Rand, 1985).

Accelerator

Substances used to hasten the setting or curing of cement such as calcium chloride, gypsum and aluminum powder.

Acrylonitrile Butadiene Styrene (ABS)

A thermoplastic material produced by varying ratios of three different monomers to produce well casing with good heat resistance and impact strength.

Adapter

A device used to connect two diferent sizes or types of threads, also known as sub, connector or coupling (Ingersoll-Rand, 1985).

Adsorption

The process by which atoms, ions or molecules are held to the surface of a material through ion-exchange processes.

Advection

The process by which solutes are transported with and at the same rate as moving ground water.

Air Rotary Drilling

A drilling technique whereby compressed air is circulated down the drill rods and up the open hole. The air simultaneously cools the bit and removes the cuttings from the borehole.

Air Rotary with Casing Driver

A drilling technique that uses conventional air rotary drilling while simultaneously driving casing. The casing driver is installed in the mast of a top-head drive air rotary drilling rig.

Aliphatic Hydrocarbons

A class of organic compounds characterized by straight or branched chain arrangement of the constituent carbon atoms joined by single covalent bonds with all other bonds to hydrogen atoms.

Alkalinity

The ability of the salts contained in the ground water to neutralize acids. Materials that exhibit a pH of 7 or greater are alkaline. High-pH materials used in well construction may have the potential to alter ambient water quality.

Aluminum Powder

An additive to cement that produces a stronger, quick-setting cement that expands upon curing.

Anisotropic

Having some physical property that varies with direction (Driscoll, 1986).

Annular Sealant

Material used to provide a positive seal between the borehole and the casing of the well. Annular sealants should be impermeable and resistant to chemical or physical deterioration.

Annular Space or Annulus

The space between the borehole wall and the well casing, or the space between a casing pipe and a liner pipe.

Aquifer

A geologic formation, group of formations, or part of a formation that can yield water to a well or spring.

Aquifer Test

A test involving the withdrawal of measured quantities of water from or addition of water to a well and the measurement of resulting changes in head in the aquifer both during and after the period of discharge or addition (Driscoll, 1986).

Aquitard

A geologic formation, or group of formations, or part of a formation of low permeability that is typically 'saturated but yields very limited quantities of water to wells.

Aromatic Hydrocarbons

A class of unsaturated cyclic organic compounds containing one or more ring structures or cyclic groups with very stable bonds through the substitution of a hydrogen atom for an element or compound.

Artesian Well

A well deriving water from a confined aquifer in which the water level stands above the ground surface; synonymous with flowing artesian well (Driscoll, 1986).

Artificial Filter Pack

See Gravel Pack.

Attenuation

The reduction or removal of constituents in the ground water by the sum of all physical, chemical and biological events acting upon the ground water.

Auger Flights

Winding metal strips welded to the auger sections that carry cuttings to the surface during drilling.

Backwash (Well Development)

The surging effect or reversal of water flow in a well that removes fine-grained material from the formation surrounding the borehole and helps prevent bridging (Driscoll, 1986).

Backwashing

A method of filter pack emplacement whereby the filter pack material is allowed to fall freely through the annulus while clean fresh water is simultaneously pumped down the casing.

Bailer

A long, narrow bucket-like device with an open top and a check valve at the bottom that is used to remove water and/or cuttings from the borehole.

Bailing (Well Development)

A technique whereby a bailer is raised and lowered in the borehole to create a strong outward and inward movement of water from the borehole to prevent bridging and to remove fine materials.

Barium Sulfate

A natural additive used to increase the density of drilling fluids.

Bentonite

A hydrous aluminum silicate available in powder, granular or pellet form and used to provide a tight seal between the well casing and borehole. Bentonite is also added to drilling fluid to impart specific characteristics to the fluid.

Biodegradation

The breakdown of chemical constituents through the biological processes of naturally occuring organisms.

Bit

The cutting tool attached to the bottom of the drill stem. Bit design varies for drilling in various types of formations and includes roller, cone and drag-type bits.

Bit, Auger

Used for soft formations with auger drill (Ingersoll-Rand, 1985).

Borehole

A hole drilled or bored into the earth, usually for exploratory or economic purposes, such as a water well or oil well (United States Environmental Protection Agency, 1986).

Borehole Geophysics

Techniques that use a sensing device that is lowered into a borehole for the purpose of characterizing geologic formations and their associated fluids. The results can be interpreted to determine lithology, geometry resistivity, bulk density, porosity, permeability, and moisture content and to define the source, movement, and physical/chemical characteristics of ground water (United States Environmental Protection Agency, 1986).

Bridge Seal

An artificial plug set to seal off specific zones in the abandonment of a well.

Bridge-Slot Intake

A well intake that is manufactured on a press from flat sheets that are perforated, rolled and seam welded where the slots are vertical and occur as parallel openings longitudinally aligned to the well axis.

Bridging

The development of gaps or obstructions in either grout or filter pack materials during emplacement. Bridging of particles in a naturally developed or artificial gravel pack can also occur during development.

Cable Tool Drilling

A drilling technique whereby a drill bit attached to the bottom of a weighted drill stem is raised and dropped to crush and grind formation materials.

Calcium Chloride

A soluble calcium salt added to cement slurries to accelerate the setting time, create higher early strength and to minimize movement of the cement into zones of coarse material.

Calcium Hydroxide

A primary constituent of wet cement.

Caliper Logging

A logging technique used to determine the diameter of a borehole or the internal diameter of casing through the use of a probe with one to four spring expanding prongs. Caliper logging indicates variations in the diameter of the vertical profile.

Capillary Fringe

The pores in this zone are saturated but the pressure heads are less than atmospheric.

Casing

An impervious durable pipe placed in a well to prevent the borehole walls from caving and to seal off surface drainage or undesirable water, gas, or other fluids and prevent their entrance into the well. Surface or temporary casing means a temporary casing placed in soft, sandy or caving surface formation to prevent the borehole from caving during drilling. Protective casing means a short casing installed around the well casing. Liner pipe means a well casing installed without driving within the casing or open borehole.

Casing, Flush-Coupled

Flush-coupled casing is joined with a coupling with the same outside diameter as the casing, but with two female threads. The inside diameter of the coupling is approximately 3/16 inch smaller than that of the casing. Flush-coupled casing has thinner walls than flush-joint casing (Ingersoll-Rand, 1985).

Casing, Flush-Joint

Flush-joint casing has a male thread at one end and a female thread at the other. No coupling is used (Ingersoll-Rand, 1985).

Casing Driver

A device fitted to the top-head drive of a rotary rig that is used to advance casing into the subsurface.

Cation Exchange Capacity (CEC)

The measure of the availability of cations that can be displaced from sites on surfaces or layers and which can be exchanged for other cations. For geologic materials, CEC is expressed as the number of milliequivalents of cations that can be exchanged in a sample with a dry mass of 100 grams.

Cement

A mixture of calcium aluminates and silicates made by combining lime and clay while heating and which is emplaced in the annular space to form a seal between the casing and the borehole.

Cement Bond Log

A logging device that uses acoustical signals to determine the integrity of the cement bond to the casing.

Cement, Quick-Setting

Cement of special composition and fineness of grind that sets much quicker than ordinary cement. This cement is used for deviating holes and plugging cavities (Ingersoll-Rand, 1985).

Cementing

The emplacement of a cement slurry by various methods so that it fills the space between the casing and the borehole wall to a predetermined height above the bottom of the well. This secures the casing in place and excludes water and other fluids from the borehole.

Center Plug

A plug within the pilot assembly of a hollow-stem auger that is used to prevent formation materials from entering the stem of the lead auger during drilling.

Center Rod

A rod attached to the pilot assembly that facilitates removal from the lead end of the hollow-stem auger.

Centralizer

Spring-loaded guides that are used to center the casing in the borehole to ensure effective placement of filter pack or grout.

Check Valve

Ball and spring valves on core barrels, rods and bailers that are used to control water flow in one direction only.

Circulate

To cycle drilling fluid through the drill pipe and borehole while drilling operations are temporarily suspended to condition the drilling fluid and the borehole before hoisting the drill pipe and to obtain cuttings from the bottom of the well before drilling proceeds (Ingersoll-Rand, 1985).

Circulation

The movement of drilling fluid from the suction pit through the pump, drill pipe, bit and annular space in the borehole and back again to the suction pit. The time involved is usually referred to as circulation time (Ingersoll-Rand, 1985).

Circulation, Loss of

The loss of drilling fluid into the formation through crevices or by infiltration into a porous media.

Clay

A plastic, soft, variously colored earth, commonly a hydrous silicate of alumina, formed by the decomposition of feldspar and other aluminum silicates (Ingersoll-Rand, 1985).

Collapse Strength

The capability of a casing or well intake to resist collapse by any or all external loads to which it is subjected during and after installation.

Compressive Strength

The greatest compressive stress that a substance can bear without deformation.

Conductivity

A measure of the quantity of electricity transferred across unit area per unit potential gradient per unit time. It is the reciprocal of resistivity.

Cone of Depression

A depression in the ground-water table or potentiometric surface that has the shape of an inverted cone and develops around a well from which water is being withdrawn. It defines the area of influence of a well (Driscoll, 1986).

Cone of Impression

A conical mound on the water tablc that develops in response to well injection whose shape is identical to the cone of depression formed during pumping of the aquifer.

Confined Aquifer

An aquifer which is bounded above and below by low-permeability formations.

Confined Bed

The relatively impermeable formation immediately overlying or underlying a confined aquifer.

Contaminant

Any physical, chemical, biological or radiological substance or matter in water that has an adverse impact.

Contamination

Contamination is the introduction into ground water of any

chemical material, organic material, live organism or radioactive material that will adversely affect the quality of the ground water.

Continuous Sampling Tube System

Thin-wall sampling tube attached in advance of the cutting head of the hollow-stem auger that allows undisturbed samples to be taken continuously while the augers are rotated.

Continuous Slot Wire-Wound Intake

A well intake that is made by winding and welding triangular-shaped, cold-rolled wire around a cylindrical array of rods. The spacing of each successive turn of wire determines the slot size of the intake.

Core

A continuous columnar sample of the lithologic units extracted from a borehole. Such a sample preserves stratigraphic contacts and structural features (United States Environmental Protection Agency, 1986).

Core Barrel

A reaming shell and length of tubing used during air or mud rotary drilling to collect formation samples in both consolidated and unconsolidated formations. Core barrels may be single or double walled and of a swivel or rigid type.

Core Lifter

A tapered split ring inside the bit and surrounding the core. On lifting the rods, the taper causes the ring to contract in diameter, seizing and holding the core (Ingersoll-Rand, 1985).

Corrosion

The adverse chemical alteration that reverts elemental metals back to more stable mineral compounds and that affects the physical and chemical properties of the metal.

Cost-Plus Contract

Drilling contracts that list specific costs associated with performing the work and include a percentage of those costs as an additional amount that will be paid to perform a job.

Coupling

A connector for drill rods, pipe or casing with identical threads, male and/or female, at each end (Ingersoll-Rand, 1985).

Cross Contamination

The movement of contaminants between aquifers or water-bearing zones through an unsealed or improperly sealed borehole.

Cutter Head

The auger head located at the lead edge of the auger column that breaks up formation materials during drilling.

Cuttings

Formation particles obtained from a borehole during the drilling process.

Decontamination

A variety of processes used to clean equipment that has contacted formation material or ground water that is known to be or suspected of being contaminated.

Dennison Sampler

A specialized sampler of a double-tube core design with a thin inner tube that permits penetration in extremely stiff or highly cemented unconsolidated deposits while collecting a thin-wall sample.

Density

The weight of a substance per unit volume.

Development

The act of repairing damage to the formation caused during drilling procedures and increasing the porosity and permeability of the materials surrounding the intake portion of the well (Driscoll, 1986).

Diatomaceous Earth

A cement additive composed of siliceous skeletons of diatoms used to reduce slurry density, increase water demand and thickening time while reducing set strength.

Differential Pressure

The difference in pressure between the hydrostatic head of the drilling fluid-filled or empty borehole and the formation pressure at any given depth (Ingersoll-Rand, 1985).

Direct Mud Rotary

A drilling technique whereby a drilling fluid is pumped down the drill rod, through the bit and circulates back to the surface by moving up the annular space between the drill rods and the borehole.

Dispersion

A process of contaminant transport that occurs by mechanical mixing and molecular diffusion.

Dissociation

The splitting up of a compound or element into two or more simple molecules, atoms or ions. Applied usually to the effect of the action of heat or solvents upon dissolved substances. The reaction is reversible and not as permanent as decomposition; that is, when the solvent is removed, the ions recombine (Ingersoll-Rand, 1985).

DNAPLS

Acronym for dense, nonaqueous-phase liquids.

Downgradient

In the direction of decreasing hydrostatic head (United States Environmental Protection Agency, 1986).

Downgradient Well

A well that has been installed hydraulically downgradient of the site and is capable of detecting the migration of contaminants from a regulated unit. Regulations require the installation

contaminant migration (United States Environmental Protection Agency, 1986).

Down-the-Hole Hammer

A pneumatic drill operated at the bottom of the drill pipe by air pressure provided from the surface.

Drawdown

The extent of lowering of the water surface in a well and water-bearing zone resulting from the discharge of water from the well.

Drill Collar

A length of heavy, thick-walled pipe used to stabilize the lower drill string, to minimize bending caused by the weight of the drill pipe and to add weight to the bit.

Drill Pipe

Special pipe used to transmit rotation from the rotating mechanism to the bit. The pipe also transmits weight to the bit and conveys air or fluid which removes cuttings from the borehole and cools the bit (Driscoll, 1986).

Drill Rod

Hollow flush-jointed or coupled rods that are rotated in the borehole that are connected at the bottom to the drill bit and on the top to the rotating or driving mechanism of a drilling rig.

Drill String

The string of pipe that extends from the bit to the driving mechanism that serves to carry the mud down the borehole and to rotate the bit.

Drilling Fluid

A water or air-based fluid used in the well drilling operation to remove cuttings from the borehole, to clean and cool the bit, to reduce friction between the drill string and the sides of the borehole and to seal the borehole (Driscoll, 1986).

Drive Block

A heavy weight used to drive pipe or casing through unconsolidated material.

Drive Couplings

Heavy-duty couplings used to join sections of heavy-wall casing that are specifically designed to withstand the forces during driving casing.

Drive Head

A component fastened to the top of pipe or casing to take the blow of the drive block (Ingersoll-Rand, 1985).

Drive Shoe

A forged steel collar with a cutting edge fastened onto the bottom of the casing to shear off irregularities in the hole as the casing advances. It is designed to withstand drive pressures to protect the lower edge of the casing as it is driven (United States Environmental Protection Agency, 1986).

Driven Well

A well that is driven to the desired depth, either by hand or machine; may employ a wellpoint, or alternative equipment.

Drop Hammer

A weighted device used to drive samplers during drilling and sampling.

Dual-Wall Reverse Circulation

A drilling technique whereby the circulating fluid is pumped down between the outer casing and the inner drill pipe, through the drill bit and up the inside of the drill pipe.

Effective Grain Size (Effective Diameter)

The particle grain size of a sample where 90 percent represents coarser-size grains and 10 percent represents finer-size grains, i.e., the coarsest diameter in the finest 10 percent of the sediment.

Electric Logging

Logging techniques used in fluid-filled boreholes to obtain information concerning the porosity, permeability and fluid content of the formations drilled based on the dielectic properties of the aquifer materials.

Established Grade

The permanent point of contact of the ground or artificial surface with the casing or curbing of the well.

Established Ground Surface

The permanent elevation of the surface at the site of the well upon completion.

Filter Cake (Mudcake)

The suspended solids that are deposited on the borehole wall during the process of drilling.

Filter Cake Thickness (Mudcake)

A measurement, in 32nd of an inch, of the solids deposited on filter paper during the standard 30-minute API filter test, or measurement of the solids deposited on filter paper for a 7 1/2-minute duration (Ingersoll-Rand, 1985).

Filter Pack

Sand, gravel or glass beads that are uniform, clean and well-rounded that are placed in the annulus of the well between the borehole wall and the well intake to prevent formation material from entering through the well intake and to stabilize the adjacent formation.

Filter Pack Ratio

A ratio used to express size differential between the formation materials and the filter pack that typically refers to either the average grain size (D_{50}) or the 70-percent (D_{70}) retained size of the formation material.

Filtrate Invasion

The movement of drilling fluid into the adjacent formation that occurs when the weight of the drilling fluid substantially exceeds the natural hydrostatic pressure of the formation.

Fixed-Price Contracts

Drilling contracts that list the manpower, materials and additional costs needed to perform the work specified as a fixed cost payable upon completion.

Floaters

Light-phase organic liquids in ground water capable of forming an immiscible layer that can float on the water table (United States Environmental Protection Agency, 1986).

Float Shoe

A drillable valve attached to the bottom of the casing.

Flocculation

The agglomeration of finely divided suspended solids into larger, usually gelatinous particles through electrical charge alignment of particles.

Flow Meter

A tool used to monitor fluid flow rates in cased or uncased boreholes using low-inertia impellers or through changes in thermal conductance as liquids pass through the tool.

Flow-Through Well

The installation of a small-diameter well intake that penetrates all or a significant portion of the aquifer. The well is designed to minimize distortion of the flow field in the aquifer.

Fluid Loss

Measure of the relative amount of fluid lost (filtrate) through permeable formations or membranes when the drilling fluid is subjected to a pressure differential (Ingersoll-Rand, 1985).

Fluoropolymers

Man-made materials consisting of different formulations of monomers molded by powder metallurgy techniques that exhibit anti-stick properties and resistance to chemical and biological attack.

Flush-Coupled Casing

See Casing, Flush-coupled.

Flush-Joint Casing

See Casing, Flush-joint.

Fly Ash

An additive to cement that increases sulfate resistance and early compressive strength.

Formation

A mappable unit of consolidated material or unconsolidated material characterized by a degree of lithologic homogeneity.

Formation Damage

Damage to the formation resulting from drilling activities (e.g., the invasion of drilling fluids or formation of mudcake) that alter the hydraulic properties of formation materials.

Formation Fluid

The natural fluids present in the formation or aquifer.

Formation Stabilizer (Filter Pack)

A sand or gravel placed in the annulus of the well between the borehole and the well intake to provide temporary or long-term support for the borehole (Driscoll, 1986).

Gel Strength

A measure of the capability of the drilling fluid to maintain suspension of particulate matter in the mud column when the pump is off.

Grain Size

The general dimensions of the particles in a sediment or rock, or of the grains of a particular mineral that make up a sediment or rock. It is common for these dimensions to be referred to with broad terms, such as fine, medium, and coarse. A widely used grain size classification is the Udden-Wentworth grade scale (United States Environmental Protection Agency, 1986).

Gravel Pack (Artificial Filter Pack); see also Filter Pack

A term used to describe gravel or other permeable filter material placed in the annular space around a well intake to prevent the movement of finer material into the well casing, to stabilize the formation and to increase the ability of the well to yield water.

Ground Water

Any water below the surface of the earth, usually referring to the zone of saturation.

Grout

A fluid mixture of neat cement and water with various additives or bentonite of a consistency that can be forced through a pipe and emplaced in the annular space between the borehole and the casing to form an impermeable seal.

Grouting

The operation by which grout is placed between the casing and the wall of the borehole to secure the casing in place and to exclude water and other fluids from moving into and through the borehole.

Gypsum

An additive to cement slurries that produces a quick-setting, hard cement that expands upon curing.

Halogenated Hydrocarbons

An organic compound containing one or more halogens (e.g., fluorine, chlorine, bromine, and iodine) (United States Environmental Protection Agency, 1986).

Hand Auger

Any of a variety of hand-operated devices for drilling shallow holes into the ground.

Head Loss

That part of potential energy that is lost because of friction as water flows through a porous medium.

Heat of Hydration

Exothermic or heat-producing reaction that occurs during the curing of cement.

Heaving Sand

Saturated sands encountered during drilling where the hydrostatic pressure of the formation is greater than the borehole pressure causing the sands to move up into the borehole.

High-Yield Drilling Clay

A classification given to a group of commercial drilling-clay preparations having a yield of 35 to 50 bbl/ton and intermediate between bentonite and low-yield clays. High-yield drilling clays are usually prepared by peptizing low-yield calcium montmorillonite clays or, in a few cases, by blending some bentonite with the peptized low-yield clay (Ingersoll-Rand, 1985).

Hollow-Stem Auger Drilling

A drilling technique in which hollow, interconnected flight augers, with a cutting head, are pressed downward as the auger is rotated.

Homogeneous

Exhibiting a uniform or similar nature.

Hydraulic Conductivity

A coefficient of proportionality that describes the rate at which a fluid can move through a permeable medium. It is a function of both the media and of the fluid flowing through it (United States Environmental Protection Agency, 1986).

Hydraulic Gradient

The change in static head per unit of distance in a given direction. If not specified, the direction generally is understood to be that of the maximum rate of decrease in head.

Hydrostatic Head

The pressure exerted by a column of fluid, usually expressed in pounds per square inch (psi). To determine the hydrostatic head at a given depth in psi, multiply the depth in feet by the density in pounds per gallon by 0.052 (Ingersoll-Rand, 1985).

Immiscible

Constituents that are not significantly soluble in water.

Incrustation (Encrustation)

The process by which a crust or coating is formed on the well intake and/or casing, typically through chemical or biological reactions.

Induction Tool

A geophysical logging tool used to measure pore fluid conductivity.

Inhibitor (Mud)

Substances generally regarded as drilling mud contaminants, such as salt and calcium sulfate, are called inhibitors when purposely added to mud so that the filtrate from the drilling fluid will prevent or retard the hydration of formation clays and shales (Ingersoll-Rand, 1985).

Isotropic

A medium whose properties are the same in all directions.

Jet Percussion

A drilling process that uses a wedge-shaped drill bit that discharges water under pressure while being raised and lowered to loosen or break up material in the borehole.

Kelly

Hollow steel bar that is in the main section of drill string to which power is directly transmitted from the rotary table to rotate the drill pipe and bit (Driscoll, 1986).

Ketones

Class of organic compounds where the carbonyl group is bonded to two alkyl groups (United States Environmental Protection Agency, 1986).

Knock-Out Plate

A nonretrievable plate wedged within the auger head that replaces the traditional pilot assembly and center rod that is used to prevent formation materials from entering the hollow auger stem.

Logging, Radioactive

The logging process whereby a neutron source is lowered down the borehole, followed by a recorder, to determine moisture content and to identify water-bearing zones.

Lost Circulation

The result of drilling fluid escaping from the borehole into the formation by way of crevices or porous media (Driscoll, 1986).

Louvered Intake

A well intake with openings that are manufactured in solid-wall metal tubing by stamping outward with a punch against dies that control the size of the openings.

Low-Solids Muds

A designation given to any type of mud where high-performing additives have been partially or wholly substituted for commercial or natural clays (Ingersoll-Rand, 1985).

Low-Yield Well

A relative term referring to a well that cannot recover in sufficient time after well evacuation to permit the immediate collection of water samples (United States Environmental Protection Agency, 1986).

Machine-Slotted Intake

Well intakes fabricated from standard casing where slots of a predetermined width are cut into the casing at regular intervals using machining tools.

Male and Female Threads

Now called pin and box threads, as in the oil industry (Ingersoll-Rand, 1985).

Marsh Funnel

A device used to measure drilling fluid viscosity where the time required for a known volume of drilling fluid to drain through an orifice is measured and calibrated against a time for

draining of an equal volume of water.

Marsh Funnel Viscosity

A measure of the number of seconds required for 1 quart (946 ml) of a given fluid to flow through the Marsh funnel.

Mechanical Joining

The use of threaded connections to join two sections of casing.

Mesh

A measure of fineness of a woven material, screen, or sieve; e.g. a 200-mesh sieve screen with a wire diameter of 0.0021 inch (0.0533 mm) has an opening of 0.074 mm, or will pass a particle of 74 microns (Ingersoll-Rand, 1985).

Miscible

Materials that are soluble in water and are typically mobile in the subsurface.

Monitoring Well

An excavation that is constructed by a variety of techniques for the purpose of extracting ground water for physical, chemical or biological testing or for measuring water levels.

Montmorillonite

A clay mineral commonly used as an additive to drilling muds; the main constituent in bentonite.

Mounding

A phenomenon usually created by the recharge of ground water from a man-made structure into a permeable geologic material. Associated ground-water flow will be away from the man-made structure in all directions (United States Environmental Protection Agency, 1986).

Mud Additive

Any material added to a drilling fluid to alter its chemical or physical properties.

Mud Balance

A balance used to determine the density of a drilling mud. (Ingersoll-Rand, 1985).

Multiple Level Monitoring Wells

A single-hole monitoring well that is installed with devices capable of sampling at multiple levels within the formation(s).

Natural Clays

Clays that are encountered when drilling various formations, whose yield may vary greatly, and that may or may not be purposely incorporated into the drilling mud system.

Naturally Developed Well

A well construction technique whereby the natural formation materials are allowed to collapse around the well intake and fine formation materials are removed using standard development techniques.

Neat Cement

A mixture of Portland cement (ASTM C-150) and water in the proportion of 5 to 6 gallons of clean water per bag (94 pounds or 1 cubic foot) of cement.

Nested Wells

Monitoring wells that consist either of a series of single-riser/ limited-interval wells that are closely spaced laterally, but with intakes at different depths, or as multiple single-riser/ limited-interval wells constructed in a single borehole.

Nominal

A term used to describe standard sizes for pipe from 1/8 in to 12 in (3.2 mm to 305 mm) in diameter specified on the basis of the inside diameter. Depending on the wall thickness, the inside diameter may be less than or greater than the number indicated (Driscoll, 1986).

Observation Well

A well drilled in a selected location for the purpose of observing parameters such as water level and pressure changes (Driscoll, 1986).

Open Hole

The uncased portion of the well that is open to the formation.

Organic Polymers

Drilling fluid additives comprised of log-chained, heavy organic molecules used to alter the physical and chemical characteristics of the fluid.

O-Ring Seal

A rubber seal emplaced between the threaded connections of hollow-stem auger sections to prevent leakage and infiltration of fluids.

Overbank Deposits

Fine-grained sediment (silt and clay) deposited from suspension on a flood plain by floodwaters that cannot be contained within the stream channel (Bates and Jackson, 1987).

Oxidation

The loss of electrons from a substance.

Packer

A compressible cylinder of rubber and metal that is placed in or outside a well to plug or seal the well or borehole at a specific point.

Partial Penetration

The intake portion of the well is less than the full thickness of the aquifer.

Parts Per Million (ppm)

Unit weight of solute per million unit weights of solution (solute plus solvent), corresponding to a weight-percent (Ingersoll-Rand, 1985).

Penetration, Rate of

The rate at which the drill proceeds in the deepening of the borehole, typically expressed in terms of feet per hour or in blow counts per foot advanced.

Perched Ground Water

Ground water in a saturated zone that is separated from the main body of ground water by a less permeable unsaturated zone or formation.

Percolate

The act of water seeping or filtering through materials without a definite channel.

Permeability

A measure of the relative ease with which a porous medium can transmit a liquid under a potential gradient (United States Environmental Protection Agency, 1975).

Piezometers

Generally a small-diameter, non-pumping well used to measure the elevation of the water table or potentiometric surface (United States Environmental Protection Agency, 1986).

Pilot Assembly

The assembly placed at the lead end of the auger consisting of a solid center plug and a pilot bit.

Plugs, Casing

Plug made of drillable material to correspond to the inside diameter of the casing. Plugs are pumped to bottom of casing to force all cement outside of casing (Ingersoll-Rand, 1985).

Plugging

The complete filling of a borehole or well with an impermeable material which prevents flow into and through the borehole or well.

Plume

An elongated and mobile column or band of a contaminant moving through the subsurface.

Polumeric Additives

The natural organic colloids developed from the guar plant that are used for viscosity control during drilling.

Polyvinyl Chloride (PVC)

Thermoplastics produced by combining PVC resin with various types of stabilizers, lubricants, pigments, fillers and processing aids, often formulated to produce rigid well casing.

Porosity

The percentage of void spaces or openings in a consolidated or unconsolidated material.

Portland Cement

Cement specified as Type I or Type II under ASTM C-150 standards.

Potentiometric Data

Ground-water surface elevations; obtained at wells and piezometers that penetrate a water-bearing formation.

Potentiometric Surface

An imaginary surface representing the total head of ground water in a confined aquifer that is defined by the level to which water will rise in a well (Driscoll, 1986).

Precipitate

Material that will separate out of solution or slurry as a solid under changing chemical and or physical conditions.

Pressure Sealing

A process by which a grout is confined within the borehole or casing by the use of retaining plugs or packers and by which sufficient pressure is applied to drive the grout slurry into and within the annular space or zone to be grouted.

Protective Casing

A string of casing set in the borehole to stabilize a section of the formation and/or to prevent leakage into and out of the formation and to allow drilling to continue to a greater depth.

Protectors, Thread

A steel box and pin used to plug each end of a drill pipe when it is pulled from the borehole to prevent foreign matter or abrasives from collecting on the greasy threads and to protect threads from corrosion or damage while transporting or in storage (Ingersoll-Rand, 1985).

Puddled Clay

Puddling clay is a mixture of bentonite, other expansive clays, fine-grained material and water, in a ratio of not less than 7 pounds of bentonite or expansive clay per gallon of water. It must be composed of not less than 50 percent expansive clay with the maximium size of the remaining portion not exceeding that of coarse sand.

Pulling Casing

To remove the casing from a well.

Pumping/Overpumping/Backwashing

A well development technique that alternately starts and stops a pump to raise and drop the column of water in the borehole in a surging action.

Pump Test

A test used to determine aquifer characteristics performed by pumping a well for a period of time and observing the change in hydraulic head that occurs in adjacent wells. A pump test may be used to determine degree of hydraulic interconnection between different water-bearing units, as well as the recharge rate of a well (United States Environmental Protection Agency, 1986).

Pumping Water Level

The elevation of the surface of the water in a well or the water pressure at the top of a flowing artesian well after a period of pumping or flow at a specified rate.

Radioactive Logging

A logging process whereby a radioactive source is lowered down a borehole to determine formation characteristics. Radioactive logging devices typically used for ground-water investigations include gamma and neutron logging probes.

Radius of Influence (Cone of Depression)

The radial distance from the center of a well under pumping

conditions to the point where there is no lowering of the water table or potentiometric surface (Driscoll, 1986).

Reamer

A bit-like tool, generally run directly above the bit, used to enlarge and maintain a straight borehole (After Ingersoll-Rand, 1985).

Reaming

A drilling operation used to enlarge a borehole.

Rehabilitation

The restoration of a well to its most efficient condition using a variety of chemical and mechanical techniques that are often combined for optimum effectiveness.

Resistivity

The electrical resistance offered to the passage of a current, expressed in ohm-meters; the reciprocal of conductivity. Freshwater muds are usually characterized by high resistivity; saltwater muds, by low resistivity (Ingersoll-Rand, 1985).

Reverse Circulation

A method of filter pack emplacement where the filter pack material is fed into the annulus around the well intake concurrently with a return flow of water. The water is pumped to the surface through the casing.

In dual-wall reverse circulation rotary drilling, the circulating fluid is pumped down between the outer casing and inner drill pipe, and then up and out through the drill bit to the surface.

Rig

The machinery used in the construction or repair of wells and boreholes.

Rotary Table Drive

Hydraulic or mechanical drive on a rotary rig used to rotate the drill stem and bit.

RVCM

Residual vinyl chloride monomer.

Samples

Materials obtained from the borehole during the drilling and/or formation sampling process that provide geological information. May also refer to water from completed well used for hydrogeochemical analysis.

Saturated Zone (Phreatic Zone)

The subsurface zone in which all pore spaces are filled with water.

Scheduling

Standardization of casing diameters and wall thicknesses where wall thickness increases as the scheduling number increases.

Screen

See Well Intake.

Seal

The impermeable material, such as cement grout, bentonite or pudded clay, placed in the annular space between the borehole wall and the permanent casing to prevent the downhole movement of surface water or the vertical mixing of water-bearing zones.

Segregation

The differential settling of filter pack or other materials that occurs in the annular space surrounding the intake during placement by gravity (free fall).

Set Casing

To install steel pipe or casing in a borehole.

Shale Shaker

Vibratory screen connected in line to the circulation system of a mud rotary rig through which the drilling fluid passes and where suspended material is separated and samples are collected.

Shelby Tube

Device used in conjunction with a drilling rig to obtain an undisturbed core sample of unconsolidated strata (United States Environmental Protection Agency, 1986).

Sieve Analysis

Determination of the particle-size distribution of soil, sediment or rock by measuring the percentage of the particles that will pass through standard sieves of various sizes (Driscoll, 1986).

Single-Riser/Limited-Interval Well

An individual monitoring well installed with a limited-length well intake that is used to monitor a specific zone of a formation.

Sinkers

Dense-phase organic liquids that coalesce in an immiscible layer at the bottom of the saturated zone (United States Environmental Protection Agency, 1986).

Slip-Fit Box and Pin Connections

A type of coupling used to join two hollow-stem auger sections.

Slotted Couplings

A device attached to the knock-out plate at the base of the lead auger that allows water to pass into the center of the auger during drilling while preventing the entrance of sediment or sand into the hollow stem.

Slotted Well Casing

Well intakes that are fabricated by cutting slots of predetermined width at regular intervals by machining tools.

Slug Test

A single well test to determine the in-situ hydraulic conductivity of typically low-permeability formations by the instantaneous addition or removal of a known quantity (slug) of

water into or from a well, and the subsequent measurement of the resulting well recovery (United States Environmental Protection Agency, 1986).

Slurry

A thin mixture of liquid, especially water, and any of several finely divided substances such as cement or clay particles (Driscoll, 1986).

Smectite

A commonly used name for clay minerals that exhibit high swelling properties and a high cation exchange capacity.

Sodium Bentonite

A type of clay added to drilling fluids to increase viscosity.

Solids Concentration or Content

The total amount of solids in a drilling fluid as determined by distillation that includes both the dissolved and the suspended or undissolved solids. The suspended solids content may be a combination of high and low specific gravity solids and native or commercial solids. Examples of dissolved solids are the soluble salts of sodium, calcium and magnesium. Suspended solids make up the mudcake; dissolved solids remain in the filtrate. The total suspended and dissolved solids contents are commonly expressed as percent by weight (Ingersoll-Rand, 1985).

Solid-Flight Auger

A solid-stem auger with a cutting head and continuous flighting that is rotated by a rotary drive head at the surface and forced downward by a hydraulic pulldown or feed device.

Solvation

The degradation of plastic well casing in the presence of very high concentrations of specific organic solvents.

Solvent Cementing

A method of joining two sections of casing where solvent is applied to penetrate and soften the casing pieces and fuses the casing together as the solvent cement cures.

Sorption

The combined effect of adsorption and/or absorption.

Specific Capacity

The rate of discharge of water from a well per unit of drawdown of the water level, commonly expressed in gpm/ft or m^3 /day/m, and that varies with the duration of discharge (Driscoll, 1986).

Specific Yield

The ratio of the volume of water that a given mass of saturated rock or soil will yield by gravity to the volume of the mass expressed as a percentage (Driscoll, 1986).

Split-Spoon Sampler

A hollow, tubular sampling device driven by a 140-pound weight below the drill stem to retrieve sample of the formation.

Spudding Beam

See Walking Beam.

Standard Dimension Ratio

A ratio expressed as the outside diameter of casing divided by the wall thickness.

Static Water Level

The distance measured from the established ground surface to the water surface in a well neither being pumped nor under the influence of pumping nor flowing under artesian pressure.

Surface Seal

The seal at the surface of the ground that prevents the intrusion of surficial contaminants into the well or borehole.

Surfactant

A substance capable of reducing the surface tension of a liquid in which it is dissolved. Used in air-based drilling fluids to produce foam, and during well development to disaggregate clays (Driscoll, 1986).

Surge Block

A plunger-like tool consisting of leather or rubber discs sandwiched between steel or wooden discs that may be solid or valved that is used in well development.

Surging

A well development technique where the surge block is alternately lifted and dropped within the borehole above or adjacent to the screen to create a strong inward and outward movement of water through the well intake.

Swivel, Water

A hose coupling that forms a connection between the slush pumps and the drill string and permits rotation of the drill string (Ingersoll-Rand, 1985).

Teflon

Trade name for fluoropolymer material.

Telescoping

A method of fitting or placing one casing inside another or of introducing screen through a casing diameter larger than the diameter of the screen (United States Environmental Protection Agency, 1975).

Temperature Survey

An operation to determine temperatures at various depths in the wellbore, typically used to ensure the proper cementing of the casing or to find the location of inflow of water into the borehole (Ingersoll-Rand, 1985).

Tensile Strength

The greatest longitudinal stress a substance can bear without pulling the material apart.

Test Hole

A hole designed to obtain information on ground-water quality and/or geological and hydrological conditions (United States Environmental Protection Agency, 1975).

Thermoplastic Materials

Man-made materials often used for well casing that are composed of different formulations of large organic molecules that are softened by heating and hardened by cooling and can be easily molded and extruded.

Thin-Wall Samplers

A hollow tubular sampling device that is pressed into the formation below the drill stem to retrieve an undisturbed sample.

Top-Head Drive

A drive for the drill stem where the bottom sub of the hydraulic drive motor is connected directly to the drill rod.

Total Dissolved Solids (TDS)

A term that expresses the quantity of dissolved material in a sample of water.

Transmissivity

The rate at which water is transmitted through a unit width of an aquifer under a unit hydraulic gradient. Transmissivity values are given in gallons per day through a vertical section of an aquifer one foot wide and extending the full saturated height of an aquifer under hydraulic gradient of 1 in the English Engineering System; in the International System, transmissivity is given in cubic meters per day through a vertical section in an aquifer one meter wide and extending the full saturated height of the aquifer under a hydraulic gradient of 1 (Driscoll, 1986).

Tremie Method

Method whereby filter pack is emplaced or bentonite/cement slurries are pumped uniformly into the annular space of the borehole through the use of a tremie pipe.

Tremie Pipe

A device, usually a small-diameter pipe, that carries grouting materials to the bottom of the borehole and that allows pressure grouting from the bottom up without introduction of appreciable air pockets (United States Environmental Protection Agency, 1975).

Turbidity

Solids and organic matter suspended in water.

Unconfined Aquifer

An aquifer not bounded above by a bed of distinctly lower permeability than that of the aquifer and containing ground water below a water table under pressure approximately equal to that of the atmosphere.

Unconsolidated Formation

Unconsolidated formations are naturally-occurring earth formations that have not been lithified; they may include alluvium, soil, gravel, clay and overburden, etc.

Underreamer

A bit-like tool with expanding and retracting cutters for enlarging a drill hole below the casing (Ingersoll-Rand, 1985).

Unified Soil Classification System

A standardized classification system for the description of soils that is based on particle size and moisture content.

Uniformity Coefficient

A measure of the grading uniformity of sediment defined as the 40-percent retained size divided by 90-percent retained size.

Unit-Price Contracts

Drilling contracts that establish a fixed price for materials and manpower for each unit of work perforned.

Upgradient Well

One or more wells that are placed hydraulically upgradient of the site and are capable of yielding ground-water samples that are representative of regional conditions and are not affected by the regulated facility (United States Environmental Protection Agency, 1986).

Vadose Zone (Unsaturated Zone)

A subsurface zone above the water table in which the interstices of a porous medium are only partially filled with water (United States Environmental Protection Agency, 1986).

Vicksburg Sampler

A strong thin-walled sampler for use in stiff and highly cemented unconsolidated deposits.

Viscosity

The resistance offered by the drilling fluid to flow.

Volatile Organics

Liquid or solid organic compounds with a tendency to pass into the vapor state (United States Environmental Protection Agency, 1986).

Walking Beam (Spudding Beam)

The beam of a cable tool rig that pivots at one end while the other end connected to the drill line is moved up and down, imparting the "spudding" action of the rig.

Water Swivel

See Swivel, Water.

Water Table

The upper surface in an unconfined ground water body at which the pressure is atmospheric (United States Environmental Protection Agency, 1975).

Weight

Reference to the density of a drilling fluid. This is normally expressed in either lb/gal., lb/cu ft, or psi hydrostatic pressure per 1000 ft of depth.

Well

Any test hole or other excavation that is drilled, cored, bored, washed, fractured, driven, dug, jetted or otherwise constructed when intended use of such excavation is for the location, monitoring, dewatering, observation, diversion, artificial recharge, or acquisition of ground water or for conducting

pumping equipment or aquifer tests. May also refer to casing and intake.

Well Cap

An approved, removable apparatus or device used to cover a well.

Well Cluster

Two or more wells completed (screened) to different depths in a single borehole or in a series of boreholes in close proximity to each other. From these wells, water samples that are representative of different horizons within one or more aquifers can be collected (United States Environmental Protection Agency, 1986).

Well Construction

Water well construction means all acts necessary to obtain ground water from wells.

Well Contractor

Any person, firm or corporation engaged in the business of constructing, altering, testing, developing or repairing a well or borehole.

Well Development

Techniques used to repair damage to the borehole from the drilling process so that natural hydraulic conditions are restored; yields are enhanced and fine materials are removed.

Well Evacuation

Process of removing stagnant water from a well prior to sampling (United States Environmental Protection Agency, 1986).

Well Intake (Well Screen)

A screening device used to keep materials other than water from entering the well and to stabilize the surrounding formation.

Well Log

A record that includes information on well construction details, descriptions of geologic formations and well testing or development techniques used in well construction.

Well Point

A sturdy, reinforced well screen or intake that can be installed by driving into the ground.

Well Seal

An arrangement or device used to cover a well or to establish or maintain a junction between the casing or curbing of a well and the piping or equipment installed therein to prevent contaminated water or other material from entering the well at the land surface.

Well Vent

An outlet at or near the upper end of the well casing to allow equalization of air pressure in the well.

Yield

The quantity of water per unit of time that may flow or be pumped from a well under specified conditions.

Yield Point

A measure of the amount of pressure, after the shutdown of drilling fluid circulation, that must be exerted by the pump upon restarting of the drilling fluid circulation to start flow.

Zone of Aeration

The zone above the water table and capillary fringe in which the interstices are partly filled with air.

Zone of Saturation

The zone below the water table in which all of the interstices are filled with ground water.

References

Bates, Robert L. and Julia A. Jackson, eds, 1987. Glossary of geology; American Geological Institute, Alexandria, Virginia, 788 pp.

Driscoll, Fletcher, G. 1986. Ground water and wells; Johnson Division, St. Paul, Minnesota, 1089 pp.

Ingersoll-Rand, 1985. Drilling terminology; Ingersoll-Rand Rotary Drill Division, Garland, Texas, 120 pp.

United States Environmental Protection Agency, 1975. Manual of water well construction practices; United States Environmental Protection Agency, Office of Water Supply, EPA-570/9-75-001, 156 pp.

United States Environmental Protection Agency, 1986. RCRA ground-water monitoring technical enforcement guidance document; Office of Waste Programs Enforcement, Office of Solid Waste and Emergency Response, Washington, D.C., OSWER-9950.1, 317 pp.

☆ U.S.GOVERNMENT PRINTING OFFICE:1991-548-187/20595