Ref 1/1/1978 0067

Influence of Cadmium and Zinc on Carbon Dioxide Evolution from Litter and Soil from a Black Oak Forest[1]

W. R. CHANEY, J. M. KELLY, AND R. C. STRICKLAND[2]

ABSTRACT

Studies have shown that heavy metals can reduce decomposition rates. Since litter decomposition is an essential part of forest mineral cycles, understanding the degree of impact that these substances have on such a key process is important. Two similar black oak forests, East Chicago (impacted) and Willow Slough (background), were chosen as study areas. Microcosms containing litter and mineral soil were collected at each site and returned to the laboratory where comparative measurements of carbon dioxide evolution were taken at 0, 12, 36, and 84 hours, and at 23 days. Measurements indicated a higher decomposition rate for the Willow Slough microcosms (138 mg CO_2/hour per kg at 23 days) compared to the East Chicago microcosms (94 mg CO_2/hour per kg). Additional microcosms from Willow Slough were treated with solutions containing all possible combinations of 0, 0.1, or 10 ppm $CdCl_2$ and 0, 100, or 1,000 ppm $ZnCl_2$. Metal concentrations applied were equivalent to litter and soil levels at East Chicago. Statistically significant differences were detected only 36 hours and 23 days after treatment. Reduced respiration rates were associated with high concentrations of $CdCl_2$/$ZnCl_2$. Suppression of respiration rates due to osmotic effects of metal salts was rejected after microcosms treated with KCl and $CaCl_2$ exhibited no change in respiration. While high levels of cadmium and zinc produced reductions in respiration rates compared to controls, low level treatments may have stimulated decomposition slightly.

Additional Index Words: **microcosm, litter decomposition, respiration.**

Decomposition of plant litter and other organic debris is an essential part of mineral cycles and a key to continued productivity of any site. The importance of this process is emphasized by the fact that 80 to 90% of net primary production in terrestrial ecosytems is ultimately acted on by decomposer organisms (Odum, 1971; Witkamp, 1971). Obviously, any interruption or reduction in organic matter decomposition would eventually result in soil nutrient deficiencies.

Decomposer organisms are known to be affected by a host of environmental conditions such as soil moisture, oxygen concentration, temperature, pH, and other properties of organic matter (Gray and Parkinson, 1968). However, relatively little is known about the impact of the various pollutants generated by our technological society on decomposition processes. Heavy metals, for example, are being enriched in the environment by a number of industrial and agricultural processes and our knowledge of their effect on ecosystems is meager. Studies concerning heavy metal effects on decomposer organisms and litter decomposition have shown that these pollutants can reduce decomposer populations and decomposition rates (Jordan and Lechevalier, 1975; Rhuling and Tyler, 1973). However, these studies were conducted very near smelters or metal reprocessing plants where metal concentrations were extremely high. Published information concerning the impact of heavy metals at more moderate concentrations is limited.

One objective of this study was to compare the rate of decomposition of forest litter from a site polluted with moderate amounts of heavy metals with that of litter from a relatively unpolluted site. A second objective was to quantify the effect on decomposition of varied concentrations of heavy metals applied to litter from an unpolluted site. These experiments were conducted to supplement a larger project investigating heavy metal dynamics and effects in a dune woodland ecosystem in the East Chicago region in northwestern Indiana.

METHODS

Microcosms of soil and litter were collected in early spring, 1975, from the Willow Slough Fish and Wildlife Area and from a wildland area located on the south side of East Chicago, Ind. The Willow Slough collection site, managed by the Division of Fish and Wildlife, Indiana Department of Natural Resources, is located in Newton County, approximately 67 km south of East Chicago, Ind. Black oak (*Quercus velutina* Lam.) dominates the stand which occurs on Plainfield fine sand (mixed, acid, mesic Typic Udipsamments) soil type (Table 1). The site is relatively free of heavy metal pollution, with cadmium and zinc levels in the litter and top 2.5 cm of soil, as determined by atomic absorption following nitric acid digestion, of approximately 0.7 and 62.0 ppm, respectively (Chaney et al., 1975).

The collection site near East Chicago is also dominated by black oak which occurs on Oakville sand (mixed, mesic Typic Udipsamments). The two sites are very similar ecologically except that the East Chicago site exists amidst an industrial complex and has been subjected to imputs of heavy metals; levels of cadmium and zinc are approximately 10 and 2,000 ppm, respectively (Chaney et al., 1975).

Microcosms were constructed by removing intact soil and litter units from the forest floor with an especially designed extractor. The extractor was constructed of heavy gauge angle iron welded together to make a rectangular frame 16 by 27 by 4.5 cm deep (Fig. 1). The lower edges were sharpened to facilitate slicing of litter and roots when the extractor was pressed into the forest floor. A steel plate with a sharpened edge was pushed under the extractor along the bottom edge to shear off an intact unit of soil and litter. The extractor and its contents were lifted from the soil, the steel plate removed, and the intact soil and litter microcosm carefully pushed from the extractor into a plastic container (18 by 28 by 12.5 cm deep). Eighty-five microcosm units were removed from an area approximately 40 m^2 at the Willow Slough site and 20 microcosm units were taken from a smaller area at the East Chicago site.

The microcosms were transported immediately to the laboratory

Table 1—Selected physical and chemical properties of microcosm soils

	pH	% Organic matter	CEC	% Base saturation	Texture
East Chicago	7.8	2.48	12.22	97.95	Sand
Willow Slough	4.8	1.92	6.27	24.27	Loamy sand

[1] Contribution from Purdue Univ. Agric. Exp. Stn. J. Pap. no. 6835. Financial support was provided by Natl. Sci. Found. (RANN) Grant GI-35106. Received 12 May 1977.

[2] Associate Professor, Research Associate, and Graduate Research Assistant, respectively, Dep. of For. and Nat. Resour., Purdue Univ., West Lafayette, IN 47907. Second author's present address: Div. of Environ. Planning, Tennessee Valley Auth., Muscle Shoals, AL 35660.

9239

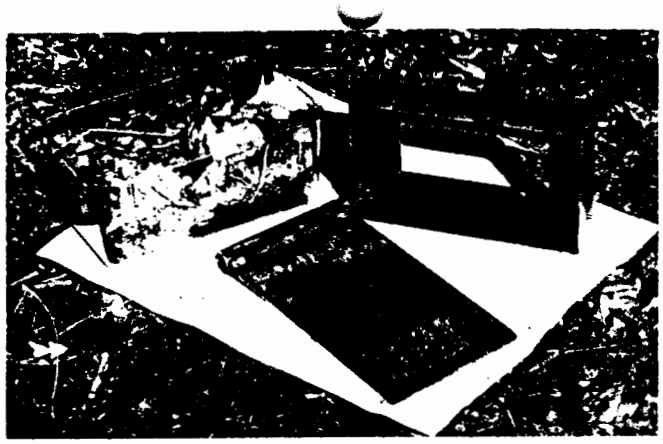

Fig. 1—Litter extractor and completed microcosm unit.

and field-weights were determined on all microcosms. Ten microcosms from each group were selected at random and separated into litter and mineral soil components. These separations were used to derive a correction factor for moisture content of the remaining microcosms so that treatments could be applied on a dry weight basis.

The microcosms were then placed in a dark growth chamber at 22°C and allowed to equilibrate for 6 mo. Each week the microcosms were weighed and water added to maintain the moisture content at the time of collection. On a dry weight basis, mineral soil accounted for approximately 95% of the weight for microcosms from Willow Slough and 87% for those from East Chicago; the remaining weight was litter, ranging from intact, easily identifiable leaves to highly decomposed, unrecognizable fragments. Mean field weight of microcosms collected from Willow Slough was 901 g with a standard deviation of 230 g, whereas those collected from East Chicago averaged 517 g with a standard deviation of 134 g.

Carbon dioxide evolution from the microcosms was monitored in an open ended gas flow system using a Beckman 315B Infrared Gas Analyzer (IRGA) (Fig. 2). The system consisted of a series of respiration chambers (30.5 by 20 by 14 cm deep) designed to snugly hold the microcosm containers. The gas-tight chambers were sealed from the top and were fitted with a high rpm fan to provide continuous mixing of gases in the chambers. Gas flow through the chambers averaged 4 vol changes per min. Ambient air was drawn from the laboratory by two pumps (P in Fig. 2) and bubbled through water saturated with KOH to remove CO_2. Carbon dioxide free air from one scrubber system (S in Fig. 2) was pumped into a manifold and exhausted through the respiration chambers, which were not being monitored. This constant purging with CO_2-free air facilitated rapid equilibration and stabilization of CO_2 evolution from microcosms when they were manually connected into the flow monitoring system from the second CO_2 scrubber system. Only a small volume of gas from the respiration chamber was passed through the IRGA, most of it being exhausted through valve V2 (Fig. 2). Drying columns containing $CaSO_4$ removed interfering water vapor from air entering the IRGA. Dry nitrogen was passed through the reference cell of the IRGA. This system permitted rapid calibration with a CO_2 primary standard. A strip chart recorder provided a continuous record of CO_2 levels detected by the IRGA. Approximately 20–30 min were required to obtain a constant CO_2 concentration in a respiration chamber. Temperature of the microcosm during determination of CO_2 evolution was continuously measured with a copper-constantan thermocouple inserted through an access port in the top of each respiration chamber. Microcosm temperature averaged 21.5°C with a standard deviation of 1.04°C. Temperature was assumed constant in calculation of respiration rates. Flow rates (liters/min) into respiration chambers at F1 (Fig. 2), steady state CO_2 concentration (mm^3/liter), and surface area (504 cm^2) were used to compute respiration rate in mg CO_2/hour per cm^2 as follows:

$$R = \frac{CO_2\,(mm^3/\text{liter}) \times 0.00296\ \text{mg}\ CO_2/mm^3 \times \text{Flow (liter/min)} \times 60\ \text{min/hour}}{\text{Surface area of microcosm}\ (cm^2)}$$

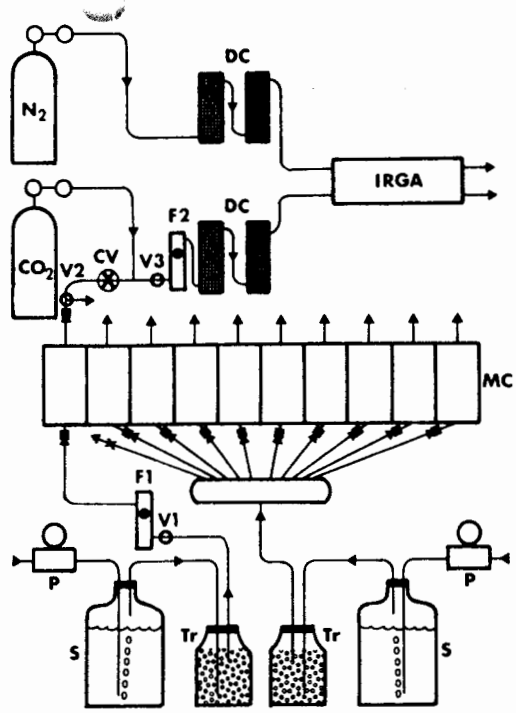

Fig. 2—Gas flow system for analysis of soil and litter CO_2 evolution. S (KOH scrubber for CO_2), TR (trap), F (flowmeter), V (valve), CV (check valve), DC (drying column), P (pump), MC (monitoring chamber).

Respiration rate also was calculated on the basis of dry weight of litter and expressed as mg CO_2/hour per kg.

Sixty-three microcosms from Willow Slough were randomly partitioned into nine treatments with seven replications. In addition, seven microcosms from East Chicago were randomly selected. Approximately 12 hours before CO_2 evolution measurements were made, microcosms were watered to bring them back to field weight. An additional 100 ml of H_2O was added to ensure that moisture stress was not a limiting factor for respiration (Ruhling and Tyler, 1973). Respiration rate was determined for all microcosms. Approximately 80 days later, respiration was monitored again for 10 microcosms, a replicate from each treatment of those from Willow Slough and one from East Chicago. Treatments including 0, 1, or 10 ppm $CdCl_2$ (0, 0.6, or 6 ppm Cd^{2+}) and 0, 100, or 1,000 ppm $ZnCl_2$ (0, 47, and 479 ppm Zn^{2+}) and all possible combinations of these three levels of the two metals were applied on the basis of estimated dry weight to the mcirocosms from Willow Slough immediately after the second respiration measurements. The concentrations of metals applied were selected because they were in the range of metals monitored in the mineral soil and litter at the East Chicago site. Metals were applied in aqueous solutions and evenly distributed over the surface of the microcosms with a burette. Respiration was monitored again 12, 36, and 84 hours and 23 days after treatment, with the higher moisture content of microcosms being maintained daily during the period respiration was measured. The above sequence of treatments was replicated seven times over a 3-mo period.

In addition, three replicate microcosms were treated with 100 or 1,000 ppm KCl or $CaCl_2$ as above, and CO_2 evolution also was monitored as described to ascertain any osmotic effect of the concentration of metal salts applied.

RESULTS

Average respiration rates, expressed as mg CO_2/hour per cm^2, for microcosms from East Chicago, Willow Slough, and Willow Slough amended with heavy metals are given in Table 2. Respiration rates declined during the 103-day test period in all three treatments, but the

Table 2—Mean respiration rate of microcosms from East Chicago and Willow Slough expressed on surface area basis. One standard deviation is shown in parenthesis below the mean

ite and eatment	Time in relation to treatment					
	−80 days	0 hours	12 hours	36 hours	84 hours	23 days
	mg CO_2/hour per cm^2*					
ast hicago	18.38 a (1.35)	15.94 ab (0.49)	16.97 ab (0.80)	14.86 b (0.95)	14.54 b (0.60)	13.59 b (1.04)
/illow lough	24.64 a (4.54)	12.14 bc (0.85)	12.59 b (0.39)	10.00 bc (0.68)	10.56 bc (1.12)	9.31 c (1.28)
/illow lough 10/1000 pm $CdCl_2$/ nCl_2	20.06 a (1.35)	14.20 b (1.39)	12.51 bc (0.78)	9.70 cd (0.70)	9.08 cd (1.06)	7.65 d (0.99)

Respiration rates within rows followed by the same letter are not significantly different at the 0.05 level.

:xtent of reduction varied among treatments. East Chicago microcosms exhibited the smallest decline in espiration rate, dropping from 18.38 to 13.59 mg CO_2/ iour per cm^2, whereas Willow Slough microcosms imended with 10/1,000 ppm $CdCl_2/ZnCl_2$ demonstrated the greatest decline, dropping from 20.06 to 7.65 ng CO_2/hour per cm^2. Untreated Willow Slough microcosms were intermediate in respiration rate decline.

The respiration rates given in Table 2 suggest that itter decomposition in microcosms from the polluted ite was greater than that in microcosms from the unpoluted site. However, if the differences in litter dry weight on the two sites is considered (approximately 5% at Willow Slough and 13% at East Chicago) and respiration is expressed on the basis of the weight of the litter, an opposite relation emerges. For example, 23 days after treatment, respiration on a litter weight basis was approximately 94 mg CO_2/hour per kg for East Chicago, 138 mg CO_2/hour per kg for untreated Willow Slough, and 94 mg CO_2/hour per kg for treated Willow Slough microcosms.

Average respiration rate of Willow Slough microcosms expressed as mg CO_2/hour per cm^2 at various times in relation to treatment with $CdCl_2$ and/or $ZnCl_2$, KCl, or $CaCl_2$ are given in Table 3. Carbon dioxide evolution rates at 0 hours, immediately prior to treatment, varied from 5.04 to 16.35 mg CO_2/hour per cm^2. This wide range of respiration rates is not surprising because the microcosms were randomly collected in the field and varied in total dry weight and in the proportion of soil to litter. Because of the wide variation in baseline CO_2 evolution rates, no statistically significant differences between treatments could be detected on the basis of the actual respiration rates. However, differences in means within a treatment over time could be detected and were tested with Duncan's New Multiple Range Test. The 0.05 level of probability was used to accept or reject the null hypothesis. When the respiration rate of each microcosm at each measurement time was expressed as a percent of the rate just prior to treatment, it was possible to analyze for differences between treatments. Analysis of variance of the percentage data for each time after treatment was performed and differences between means were tested with Duncan's New Multiple Range Test. Significant differences between treatments were detected only 36 hours and 23 days after treatment (Fig. 3 and 4). After 36 hours $CdCl_2$/ $ZnCl_2$ treatments of 1/1000 and 10/1000 ppm significantly depressed respiration rate below that of microcosms treated with 0/100 and 1/0 ppm $CdCl_2/ZnCl_2$ (Fig. 3). The 10/100 ppm $CdCl_2/ZnCl_2$ treatment also reduced respiration below that measured in the 0/100 ppm treatment. After 23 days (Fig. 4) microcosms treated with 0/1000, 1/1000, and 10/1000 ppm $CdCl_2$/ $ZnCl_2$ evolved CO_2 at a slower rate than those receiving 10/0 ppm $CdCl_2/ZnCl_2$. Respiration of the 1/100 ppm treatment was also significantly higher than respiration in microcosms treated with 10/1000 ppm $CdCl_2/ZnCl_2$.

The most consistent difference between treatments of Willow Slough microcosms (Table 3) was the reduction in respiration rate between the −80 day measurements and just prior to treatment (0 hours). The only other differences detected in the Cd- and Zn-treated microcosms were declines in respiration of the untreated microcosms and those treated with $CdCl_2/ZnCl_2$ ratios of 0/1000 and 10/1000 ppm. The fact that microcosms treated with low levels of $CdCl_2$ and/or $ZnCl_2$ did not decline significantly in respiration rates is also notable and suggests the possibility of stimulation of respiration at low metal levels. Suppression of respiration rates was not due to any osmotic effects of the metal salts applied or to the chloride ion as demonstrated by the treatment

Table 3—Mean respiration rate of microcosms from Willow Slough treated with varied concentrations of $CdCl_2$, $ZnCl_2$, $CaCl_2$, or KCl. One standard deviation is shown in parenthesis below the mean

Treatment ($CdCl_2$/ $ZnCl_2$, ppm)	Time in relation to treatment					
	−80 days	0 hours	12 hours	36 hours	84 hours	23 days
	mg CO_2/hour per cm^2*					
0/0	24.64 a (4.54)	12.14 bc (0.85)	12.59 b (0.39)	10.00 bc (0.68)	10.56 bc (1.12)	9.31 c (1.28)
0/100	28.94 a (5.04)	9.62 b (0.72)	11.03 b (0.97)	9.34 b (1.11)	8.10 b (0.91)	8.67 b (1.28)
0/1000	22.27 a (2.48)	10.72 b (0.99)	10.11 bc (0.72)	7.80 cd (0.86)	7.80 cd (0.93)	7.36 d (1.06)
1/0	26.72 a (5.28)	12.08 b (1.54)	13.13 b (1.27)	11.46 b (1.79)	10.76 b (1.14)	11.10 b (1.38)
1/100	24.95 a (7.39)	11.94 b (1.28)	12.25 b (1.23)	9.82 b (0.56)	9.56 b (0.01)	11.51 b (1.94)
1/1000	23.97 a (3.06)	10.38 b (1.13)	9.48 b (1.38)	7.37 b (1.16)	8.39 b (1.35)	7.04 b (1.54)
10/0	19.43 a (2.65)	10.83 b (1.63)	11.52 b (1.59)	9.86 b (1.93)	9.48 b (2.01)	11.51 b (1.50)
10/100	22.20 a (2.76)	14.66 b (2.36)	13.23 b (2.14)	10.23 b (2.15)	10.44 b (2.06)	11.33 b (1.94)
10/1000	20.06 a (1.35)	14.20 b (1.39)	12.51 bc (0.78)	9.70 cd (0.70)	q9.08 cd (1.06)	7.65 d (0.99)
100 $CaCl_2$		5.04 a (0.56)	6.17 a (0.73)	7.02 a (0.75)	15.90 b (0.72)	9.15 c (0.44)
1000 $CaCl_2$		9.36 a (1.07)	11.90 a (1.41)	14.1 a (1.58)	19.27 b (2.82)	13.71 a (0.60)
100 KCl		16.35 a (1.54)	11.95 a (0.81)	13.51 a (0.52)	14.13 a (1.89)	17.30 a (1.27)
1000 KCl		15.68 a (0.76)	11.81 a (1.67)	14.24 a (1.50)	13.45 a (0.44)	13.03 a (0.62)

* Respiration rates within rows followed by the same letter are not significantly different at the 0.05 level.

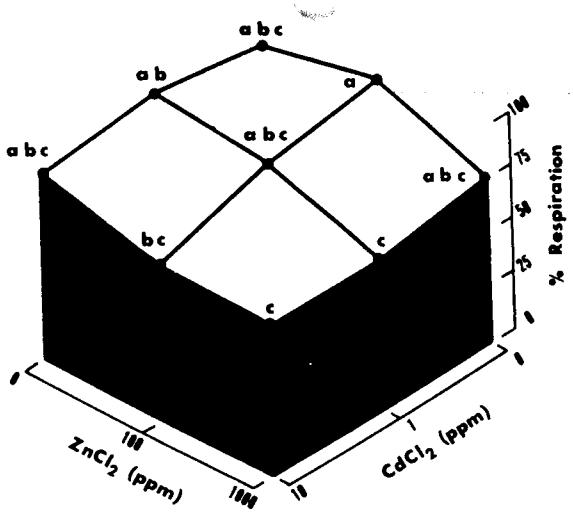

Fig. 3—Average respiration of soil and litter microcosms 36 hours after treatment with $CdCl_2$ and $ZnCl_2$ expressed as % of respiration rate of microcosms just prior to treatment (0 hours). Points marked with the same letter are not significantly different at the 0.05 level.

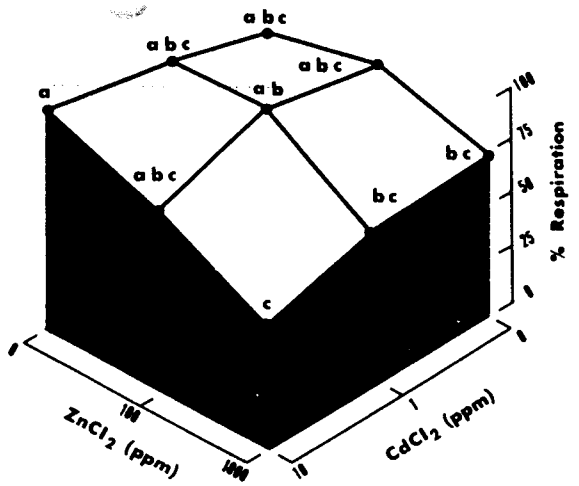

Fig. 4—Average respiration of soil and litter microcosms 23 days after treatment with $CdCl_2$ and $ZnCl_2$ expressed as % of respiration rate of microcosms just prior to treatment (0 hours). Points marked with the same letter are not significantly different at the 0.05 level.

with KCl and $CaCl_2$ (Table 3). Potassium chloride at 1,000 ppm had no effect on respiration and $CaCl_2$ even stimulated the rate of evolution of CO_2 over time.

DISCUSSION

The decline in microcosm respiration rates over the experimental period was probably due to the gradual elimination of organic substrate for the decomposer organisms and to a decrease in the actual number of decomposer organisms. Jensen (1974), for example, in his review, noted that in laboratory incubation experiments with litter, the counts of fungi and bacteria follow a pattern consisting of an initial increase to a maximum after a few weeks, followed by a gradual decrease. The more rapid decline in respiration rate of treated Willow Slough microcosms would appear to have occurred because decomposers were inhibited by Cd and Zn. However, in a similar study, Bond et al. (1976) had not observed a population decline by the end of a comparable study period. When compared to treated microcosms, although the East Chicago soil and litter contained a higher concentration of Cd and Zn, the rate of respiration decline was slower. This suggests that the heavy metals were bound in an unavailable form or that the decomposers had adapted to the conditions. Adaptation of microorganisms to heavy metals in ecosystems has been reported by several investigators (Kendrick, 1972: Jordan and Lechevalier, 1975; Tatsuyama et al., 1975; and Gingell et al., 1976). These observations raise the larger and still unanswered question of what relationship does added soluble Cd^{2+} and Zn^{2+} have to particulate imputs and what comparisons can be made between the one-time addition of metals and the chronic buildup situation?

The importance of the method of expressing soil and litter decomposition rate is demonstrated in this study. The respiration rates of microcosms from East Chicago were greater than those from Willow Slough when respiration was expressed on a surface area basis. However, when respiration is expressed on the basis of the weight of litter, a reverse relationship is found because more litter exists on the East Chicago site. This may reflect the impact of heavy metals and other pollutants on the processes of decomposing organisms at East Chicago. Weight loss of black oak litter from the same East Chicago study site has been reported to be one-half of the weight loss of black oak litter at Willow Slough (J. C. Inman. 1976. Decomposition and heavy metal dynamics of forest litter of northwestern Indiana. M.S. Thesis, Purdue Univ.).

Addition of $CdCl_2$ and $ZnCl_2$ to Willow Slough soil and litter indicate that 1,000 ppm $ZnCl_2$ alone or in combination with 10 ppm $CdCl_2$ can reduce soil and litter decomposer activity. An interesting result was the significant decline in respiration of the control microcosms, whereas those treated with low levels of Cd and Zn did not decline in respiration rate. This could be interpreted as a stimulation of respiration since it should decline with time. Similar results were obtained by Bond et al. (1976) who noted a stimulation of soil and litter respiration at low levels of Cd and inhibition at high levels. Many materials are known to stimulate organisms at very low concentration and to inhibit at higher concentration (Loomis, 1971). The inhibitory effect noted in this study was not a response to osmotic stress as demonstrated with the treatments of $CaCl_2$ and KCl. The stimulation of respiration by Ca^{2+} is interesting since it has been found to compete with Cd^{2+} (Jarvis et al., 1976).

These data suggest that Cd^{2+} and Zn^{2+} together in concentrations lower than that monitored in litter in an industrialized area inhibit decomposition. However, low levels of these heavy metals appear to stimulate respiration, and consequently, decomposition. The toxic effect of high concentrations of Cd^{2+} and Zn^{2+} on the activity of soil and litter microorganisms is probably due to their ability to compete with essential elements (Mn, Fe, Mg) for the active sites ($-SH$, $-NH_2$, $-NH$) of enzymes (Bhuiya and Cornfield, 1972). A mechanism for the stimulation is not known.

LITERATURE CITED

1. Bhuiya, M. R. H., and A. H. Cornfield. 1972. Effects of addition of 1000 ppm Cu, Ni, Pb and Zn on carbon dioxide release during incubation of soil alone and after treatment with straw. Environ. Pollut. 3:173-174.
2. Bond, H., B. Lighthart, R. Shimabuku, and L. Russell. 1976. Some effects of cadmium on coniferous soil and litter microcosms. Soil Sci. 121:278-287.
3. Chaney, W. R., R. A. Greenkorn, W. W. McFee, G. R. Parker, and J. M. Kelly. 1975. Terrestrial ecology. Part II, p. 1-45. *In* The environmental flow of cadmium and other trace metals. Prog. Rep., NSF (RANN) Grant GI-35106. Purdue Univ., West Lafayette, Ind.
4. Gingell, S. M., R. Campbell, and M. H. Martin. 1976. The effect of zinc, lead, and cadmium pollution on the leaf surface microflora. Environ. Pollut. 11:25-38.
5. Gray, T. R. G., and D. Parkinson (eds.). 1968. International symposium on the ecology of soil bacteria. Univ. of Toronto Press. 681 p.
6. Jarvis, S. C., L. H. P. Jones, and M. J. Hopper. 1976. Cadmium uptake from solution by plants and its transport from root to shoot. Plant Soil 44:179-191.
7. Jensen, V. 1974. Decomposition of angiosperm tree leaf litter. p. 69-104. *In* C. H. Dickinson nd G. J. F. Pugh (eds.) Biology of plant litter decomposition, Vol. I. Academic Press, N. Y. 241 p.
8. Jordan, M. J., and M. P. Lechevalier. 1975. Effects of zinc smelter emissions on forest soil microflora. Can. J. Microbiol. 21:1855-1865.
9. Kendrick, W. B. 1962. Soil fungi of a copper swamp. Can. J. Microbiol. 8:639-647.
10. Loomis, T. A. 1974. Essentials of toxicology. 2nd ed. Lea and Febiger, Philadelphia, Pa. 223 p.
11. Odum, E. P. 1971. Fundamentals of ecology. 3rd ed. W. G. Saunders Co., Philadelphia, Pa. 574 p.
12. Ruhling, A., and G. Tyler. 1973. Heavy metal pollution and decomposition of spruce needle litter. Oikos 24:402-416.
13. Tatsuyama, K., H. Egawa, H. Yamamoto, and H. Senmaru. 1975. Cadmium resistant microorganisms in the soil polluted by the metals. Trans. Mycol. Soc. Japan. 16:69-78.
14. Witkamp, M. 1971. Soils as components in ecosystems. Annu. Rev. Ecol. Syst. 2:85-110.

Decomposition of Sewage Sludge Compost in Soil: II. Phosphorus and Sulfur Transformations[1]

J. M. TAYLOR, L. J. SIKORA, C. F. TESTER, AND J. F. PARR[2]

ABSTRACT

Laboratory incubation studies were conducted in which sewage sludge compost was mixed with three soils (Evesboro loamy sand, Christiana silty clay loam, and Fauquier silt loam) and a sand at rates of 0, 2, 4, and 6% (0, 44.8, 89.6, and 134.4 metric tons/ha, respectively) of the dry weight. The mixtures were incubated at 22°C under a flow of CO_2- and NH_3- free air. Extractable P in the compost-sand mixtures ranged from 48 to 81% of the total P. The Evesboro-compost-sand mixtures showed an initial net P mineralization trend followed by a slight immobilization trend at 54 days. The Christiana-compost mixtures had less extractable P than the Evesboro-compost mixtures, but did show initial increase in extractable P followed by a decrease during incubation. The iron and aluminum components in the Christiana soil were probably responsible for net immobilization of extractable P. The Fauquier-compost mixtures had the least extractable P and the highest free iron oxide content. Contrary to the other soils, the Fauquier-compost mixture showed initial net immobilization of extractable P followed by mineralization at 54 days. Ammonium acetate extractable S in the sand-compost mixtures was 8 to 11% of the total S. In the Evesboro-compost mixtures extractable S increased after 54 days incubation. The Christiana-compost mixtures immobilized extractable S early in the incubation but net mineralization of S was subsequently evident where the soil was amended with 4 and 6% compost. The Fauquier-compost mixture had the least extractable S and had immobilization-mineralization trends similar to the extractable P data. Both extractable P and S are in sufficient quantities at the 44.8 metric tons/ha application rate to sustain plant growth and, therefore, sewage sludge compost could be used to correct P or S deficiencies in most soils.

Additional Index Words: **laboratory incubation, mineralization, immobilization, extractable P, extractable S.**

[1]Contribution from the Biol. Waste Manage. and Soil Nitrogen Lab., Beltsville Agric. Res. Center, ARS-USDA, Beltsville, MD 20705. This research was supported in part by the Maryland Environ. Serv., Annapolis, Md., and the USEPA, Cincinnati, Ohio. Received 26 May 1977.

[2]Plant Physiologist, Research Chemists, and Microbiologist, respectively.

Several methods for sewage sludge treatment are being actively investigated (USEPA, 1974). One of the more attractive methods from a least-cost standpoint is stabilization of sludge by composting (Epstein et al., 1976a; Parr et al., 1977; Tester et al., 1977). Since 1973, the Agricultural Research Service of the U.S. Department of Agriculture has conducted studies on composting digested and undigested sewage sludge at Beltsville, Md., by the windrow and aerated pile methods (Willson and Walker, 1973; Epstein et al., 1976a). The benefits of composting sewage sludge have been discussed previously (Tester et al., 1977; Parr et al., 1977; Epstein et al., 1976a). In addition to rapid stabilization and pathogen destruction, composting produces a humus-like organic material that can be utilized as a low-analysis fertilizer and soil conditioner (Epstein et al., 1976b).

Fertility evaluation of sewage sludge compost requires the measurement of mineralization rates and subsequent levels of plant-available nutrients in the compost-soil medium. Johnston (1975) reported on the Woburn Market Garden experiment which involved, in part, the application of sludge compost to land over a 25-year period. Compost made from straw and sewage sludge was added at 67 and 134 metric tons/ha rates every 2 years for 8 years in one experiment and for 18 years in another. Johnston concluded that (i) soils amended with sewage sludge compost or vegetable compost contained a higher percentage of organic matter than those treated with farm yard manure or sewage sludge, (ii) the N and P retained in the soil were linearly related to the N and P application rates for all organic materials added, and (iii) sludge and sludge composts added little K to the soil. In a field study comparing sewage sludge and sludge compost, Epstein et al. (1976b), found that P increased nonlinearly with increased application of sewage sludge compost. Terman et al. (1973) studied the fertility value of a municipal compost fortified with sewage sludge (5 to 20%, dry weight), and