Reference 8/17/1989

HIGH EFFICIENCY PARTICULATE ARRESTORS (HEPA FILTERS)

in the NUCLEAR INDUSTRY

Joseph Goldfield, Consulting Engineer

Introduction

The High Efficiency Particulate Arrestor (HEPA filter) is widely used in the nuclear and high technology industries. When used in nuclear power and weapons plants, it may be the primary protection of entire communities from the effects of dangerous and even lethal discharges of radioactive materials. Where does the HEPA filter come from? What is it? How is it tested? Can we rely upon it? What are its weaknesses? This paper attempts to answer these questions?

Genesis of the HEPA Filter

The birth of the HEPA filter may be found in the development of protective devices used in chemical warfare. Modern chemical warfare dawned in the first world war at Ypres, Belgium, April 22, 1915. On that infamous day German troops emptied 15,000 - 40 pound tanks of chlorine gas on a 5 km front against British and French colonial troops. 5,000 deaths and 15,000 hospitalized casualties resulted. (1)

To defend against poison gases, gas masks, including canisters that contained various adsorbents, but principally activated charcoal impregnated with chemicals were developed and issued to troops. Activated charcoal is very effective against many organic gases. However, granular beds of activated charcoal are quite useless for filtering small size particulates from air streams. The Germans developed various smokes that were not lethal in themselves, but were very irritating and caused nausea and vomiting in relatively low concentrations. These smokes, passing thru charcoal beds, caused soldiers to remove their masks, making them subject to the lethal effects of the "poison" gases dispersed simultaneously.

Thus, for relatively complete protection, particulate filters had to be developed and installed in gas mask canisters. Because the irritating smokes were effective in extraordinarily low concentrations, the

9508

SUMMARY

HEPA filters evolved from filter materials developed for gas mask canisters during the second world war. Their extremely high efficiency made them excellent candidates for use in the large-scale filters required for the nuclear industry. The small and large hot DOP tests and the cold DOP test had to be invented to develop the filter materials and to test completed small and large scale filters and filter installations. Great care must be exercised to ensure that personnel and equipment are equal to the exacting requirements of these tests. After installation, filter banks must be tested as frequently as monthly with cold DOP test methods. Inability to test, due to deficiencies in installations, casts grave doubt on the integrity of the filter bank and its reputed efficiency. The cold DOP test is the only test that can be applied to installed HEPA filters. It is not an efficiency test. It is purely a leak test. Once a HEPA filter is installed, there is no test method available for ascertaining its efficiency.

HEPA filters are subject to damage during and after installation. When made of fiberglass materials, electrostatic effects, that can leak off, in actual use, will cause them to test excessively high in efficiency. Before testing, air of high relative humidity must be run through filters made of glass fibers, until the tester is satisfied that any charges have leaked off. HEPA filters are subject to catastrophic failure due to fire and/or explosion. Leakage in filters and filter bank components are an ever-present hazard that is difficult to detect. It reduces the effectiveness of installations to levels below those assumed from laboratory, hot DOP test results. Work that has been done to correlate the penetration of multiple HEPA filter installations by DOP test smokes and plutonium aerosols and to confirm ERDA guidelines for HEPA penetration draws excessively optimistic conclusions. The work described uses ball-milled plutonium to simulate sub-micron smokes probably thermally generated in the field. It tested 25 CFM filters instead of the large, field installations that may total hundreds of thousands of CFM. Aerosol concentrations were 2×10^5 to 1.6×10^8 times as great as those found in field tests. The exceedingly high concentrations caused plugging and consequent rapidly rising efficiencies. Only three filters in series were tested. As many as six banks in series are now used in practice. Of the three filters in series, the third filter, in one set of tests, gave penetrations that were 60 times as high as the penetration of the first filter. The third filter was the first of the three that was presented with a plutonium aerosol concentration that was in the range of those found in field tests. Its penetration exceeded ERDA guidelines. Alpha recoil effects and filter bank leakage will increase field, filter penetrations to levels that may be well above ERDA guidelines for all stages of filtration after the first one.

efficiency of filters needed was very high--far higher than any commercially available.

After Pearl Harbor, when the United States entered the second world war, the particulate filter that was in use, consisted of a relatively low pressure drop cellulose paper impregnated with carbon black particles. The carbon black was generated by burning acetylene in an oxygen deficient atmosphere. The resulting gases, rich in small carbon particles were sucked thru the base, porous, cellulose paper. The impregnated paper was wrapped on a cylindrical case into which activated charcoal had been charged. Six or seven layers of the paper were wrapped around the canister. Air breathed thru a face piece was drawn radially thru the canister and successively purified of smokes and gases.

The filter described above was quite effective. Nevertheless, shortly before United States entry into World War II, the discovery had been made that the gas mask filter--paper impregnated with carbon--had a fatal flaw. If liquid particulates such as oil smokes, used for screening purposes, were drawn through the filter, it rapidly lost efficiency. This defect caused a frantic effort to develop a different filter material.

Emulating a German gas mask canister, a pleated filter was developed that used a single layer of material. The filter material that resulted was a paper about 1/16 inch thick, made of cellulose fibers, cotton or wood, through which blue asbestos fibers had been dispersed. This material was exceedingly efficient. At the low pressure drop required to limit interference with breathing efforts, poison smokes could be removed with the required efficiencies to render them relatively innocuous. This filter was ready in time so that large numbers of canisters could be supplied to troops involved in the Normandy invasion--the second front of World War II.

Towards the end of World War II, the Atomic Energy Commission developed a requirement for a highly efficient, large scale, particulate filter for use in the emerging atomic industry. Very quickly, the Chemical Warfare Service developed a large scale design and a relatively large number of filters were manufactured and shipped. The design utilized the high-efficiency, asbestos-bearing paper manufactured for gas mask canisters. A roll of paper, about two feet wide, was mounted on a pleating

machine that folded the paper into pleats that were six inches wide. Spacers, about 3/8 inches thick were inserted into each pleat to separate the paper when air was sucked thru. Assemblies, approximately 24 inches long, consisting of the pleated paper and spacers, were slipped into wooden frames that were 24 inches square. A bituminous mastic was poured into the space between the filter material assembly and the walls of the wooden frame. Thus was born the HEPA filter!

The papers now used are generally made of glass microfibers. The filter frame dimensions may vary. The depth of the filter is commonly 11 1/2" instead of six. The mastic is often a polyurethane foam. Spacers are corrugated instead of flat. Nevertheless, in essential concept the filter remains as it was originally conceived well over 40 years ago.

Figure 1 shows a sketch of the HEPA filter.

(NOTE--Insert sketch or picture of HEPA filter)

FIGURE 1
HEPA FILTER

The purpose of this paper is not to depreciate the efficiency nor the utility of the HEPA filter but to call attention to some of its weaknesses and the remarkable and complicated efforts that are required to insure the safety of the communities that are protected from dangerous and potentially lethal, radioactive discharges by the walls of fragile, paper assemblies--not the concrete and steel enclosures normally associated in the public mind with containment of atomic energy plants and manufacturing operations.

Testing of HEPA Filters

The development of a single layer of filter material that was equal in efficiency to 6 or 7 wraps of the less efficient, carbon-impregnated paper, created a requirement for a highly sensitive, reproducible, sophisticated test method for use both in the development of the filter material and for

production testing of gas mask canisters. The hot DOP test was the result.

Hot DOP Test

Dioctylphthalate (DOP) was chosen as the material for generating smokes because of its high refractive index and because of its supposed non-toxicity. The latter quality is now in doubt because in recent years DOP has been accused of mutagenic and carcinogenic properties. The high refractive index was important because the intensity of the scattered light in light scattering photometers is increased with increasing refractive indices.

Figure II shows a sketch of the DOP test.

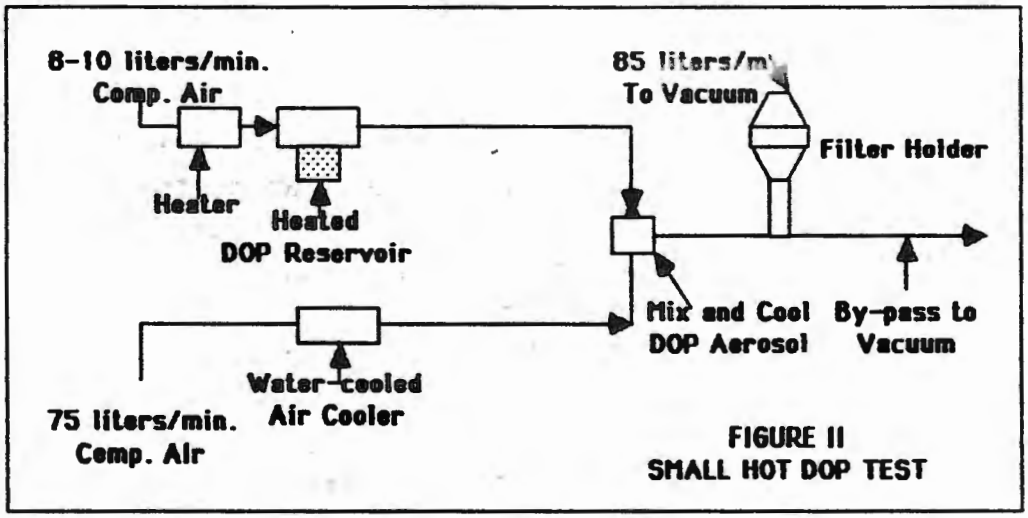

FIGURE II
SMALL HOT DOP TEST

A small reservoir of DOP is heated to a relatively high temperature (about 390°F). A relatively small stream of heated air (at about 365°F) is blown across the surface of the reservoir. A larger volume of air, held at a constant temperature of about 72°F, is mixed with the hot air stream and DOP vapor. The cooled mixture causes the DOP to condense as a very finely divided smoke. The smoke consists of a relatively uniform size of liquid DOP particles that are round in shape. The smoke concentration can be raised by raising DOP temperature and the temperature of the hot, vaporizing air. The particle size can be controlled by reducing or raising the temperature of the cooling air stream.

The particle size of the resultant smoke was thought to be 0.3 micrometers in diameter for a great many years. Doubt has been thrown on that particle size in recent years. One article [2] claims that the particle

size of the hot DOP smoke is 0.19 micrometers. Whatever the true particle size, it is believed that the particle size distribution lies in quite narrow limits.

The particle size of the hot DOP test was chosen as the standard because it was believed to be the optimum, penetrating particle size. There is no question that deviating from the normally produced particle size causes penetration readings to be reduced.

The smoke concentration in the hot DOP test is about 100 micrograms per liter. This relatively high concentration increases the sensitivity of the test method, permitting very low penetrations to be measured.

The penetration of a filter is measured with a forward-light scattering photometer. The photometer is constructed so that a high intensity light source is focused into the interior of an optically dark cylinder. The direct rays of the light are baffled so that a phototube, mounted on the opposite end of the tube cannot see the baffled light rays. When a sample of the DOP smoke, that is being generated, is drawn into the optically dark cylinder, the light scattered by the smoke particles, fills the cylinder and sends a beam of scattered light rays to the phototube. The signal from the phototube is amplified by electrical circuits and read by means of electrical meters. The meter is set to read 100% when a sample of the unfiltered smoke is drawn into the photometer. A sample of smoke after the filter is then drawn into the instrument. The amplified signal gives a reading of the percentage of scattered light compared to the signal from the unfiltered smoke. That percentage is the penetration of the filter being tested. 100 – penetration = filter efficiency.

Figure III shows a rough sketch of the photometer.

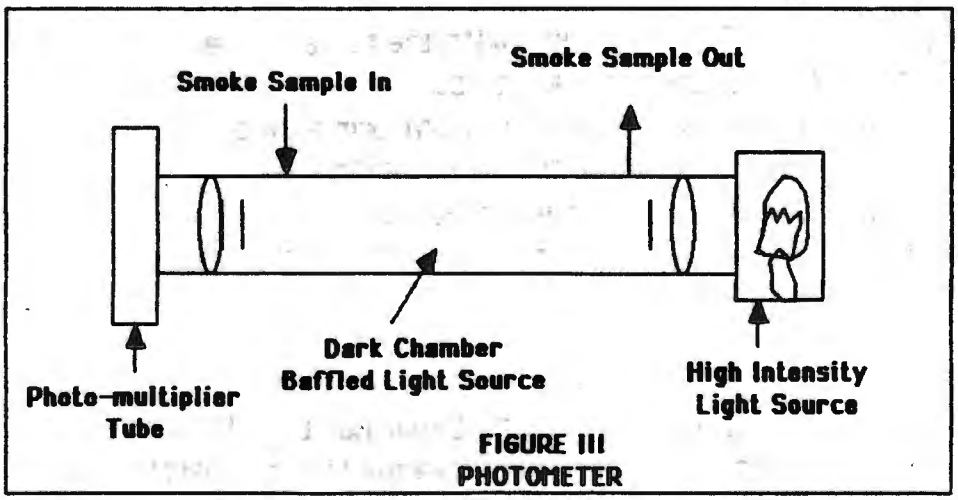

FIGURE III
PHOTOMETER

Whatever drawbacks there are to this test it has been in constant use for over 45 years. There is an enormous accumulation of data. Development of an alternative test method would face a great uphill battle. For example, the particle size being generated has been called into question. Nevertheless, by maintaining constant geometric configurations and constant operating conditions, the smoke particle size can be duplicated quite well. Any other test method that relied on instrument readings to duplicate the DOP particle size would immediately be subject to question.

Using the laboratory scale DOP tester, filter materials were developed that could filter DOP smoke with efficiencies of 99.995% (penetration of 0.005%). These materials were later incorporated into HEPA filters.

Large Scale DOP Test

The laboratory DOP test described above had a flow capacity of 85 liters per minute or about 3 cubic feet per minute. Figure IV shows a test that has a capacity of 1,000 CFM and can test full size HEPA filters. (3) The apparatus in the sketch is 40 feet long. Room air is drawn through an inlet filter housing that cleans the air with HEPA filters. A motor-blower blows 1,200 CFM of the air through three alternate paths. 85 CFM is heated to 365°F in the topmost duct of the figure. The heated air passes over a reservoir of DOP that is held at 390°F. The air mixes with and entrains DOP vapor.

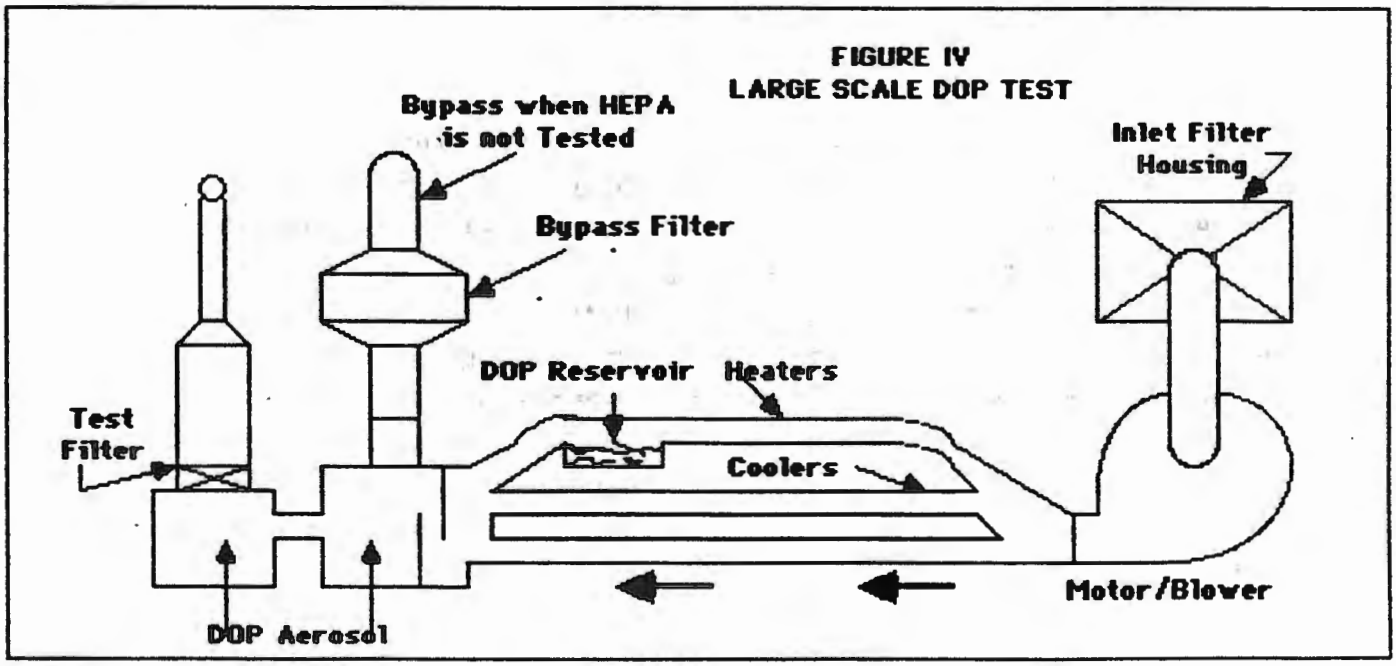

FIGURE IV
LARGE SCALE DOP TEST

265 CFM of the original air stream passes through the center duct where cooling coils hold the temperature of the air constant at 72°F. The air from the hot, topmost duct and the cooled air of the center duct mix and the quenched mixture causes the DOP vapor to condense to a rather uniform particulate reputed to be 0.3 micrometers in size. The remainder of the 1,200 CFM--850 CFM, flows through the lowest of the three ducts and mixes with the particulate laden air of the mixture previously described. The resultant diluted aerosol is exhausted through a filter housing when no test is in progress. 1,000 CFM of the mixture can be directed to a HEPA filter to be tested. 200 CFM can be exhausted to the alternate path while a test is in progress. This arrangement permits equilibrium conditions to be established and maintained in the apparatus at all times.

For use in the nuclear industry, each filter must be tested on the described system. Its efficiency must be greater than 99.97% and its pressure drop must be less than 1 inch of water at 1,000 CFM. The filter efficiency is determined by means of a forward-light scattering photometer that is similar to the one described for the small scale test.

As mentioned previously, filter materials with an efficiency of 99.995% could be made over forty years ago. One of the references [2] cites filter materials available with an efficiency of 99.997%. Why does a HEPA filter only require an efficiency of 99.97%? In order to avoid the rejection of unreasonable numbers of filters, a ten-fold increase in penetration must be accepted because of manufacturing difficulties.

Testing by "Cold" DOP

The "hot" DOP tests described are essentially laboratory tests. Only the efficiency results obtained by their use can be used to designate the efficiency of HEPA filters. As we will see later, those efficiency results can only be used for relative purposes to compare HEPA filters. The efficiency numbers cannot be applied to the filtration of aerosols in other systems. The "cold" DOP test described in this section is essentially a leak test. Although the results of the use of this test may use numbers similar to those obtained from hot DOP tests, they must **not** be confused with filter efficiencies. " *There is no standard procedure for determining the efficiency of HEPA filters using polydispersed DOP or any other 'cold' aerosol used for leak testing.*" [2]

The cold DOP test was developed as a much simpler test than the hot DOP test and is applied both on the manufacturers' premises and in the field as a leak test. The cold DOP aerosol is generated by means of Laskin nozzles. One nozzle per 500 CFM produces a concentration of 10-20 µg/liter. The Laskin nozzle atomizes the DOP by means of compressed air at 20-25 psig. The resulting aerosol has quite a different particle size distribution than that obtained in hot DOP generators. The following distribution is typical:

99% less than 3.0 micrometers
95% less than 1.5 micrometers
92% less than 1.0 micrometers
50% less than 0.72 micrometers
25% less than 0.45 micrometers
10% less than 0.35 micrometers[3]

The resultant aerosol is blown through a single filter or a bank of filters in the field. Whether the smoke is blown through one filter or many, great care must be taken to uniformly disperse the smoke in the air stream. The uniform dispersal of the smoke is key to obtaining reliable results. If a bank of filters are installed so that uniform smoke dispersal ahead of and after the HEPA filters cannot be maintained then the leak tests are not valid.

The leak test is performed with a forward-light scattering photometer such as the ones used in the hot DOP test. About one CFM is drawn through a probe and into the photometer casing. The unfiltered smoke sample is drawn into the photometer and used to set the 100% reading. The probe is used to scan the clean side of the HEPA filter--searching for leaks that would show up as surges in the photometer reading. Especial care would be used to sample at the joints of the filter casing and all around the mastic seal at the periphery of the filter assembly. Searching for leaks is a long, drawn out procedure. Even the entire filter surface must be probed, searching for damage that may have resulted from shipping and handling.

Two-Flow Testing

Another method of searching for leaks uses two flow testing. In this method a completed HEPA filter is tested at rated flow and at 20% of rated flow. At 20% of rated flow the proportion of flow through a leak increases with respect to the total. The penetration through the filter material decreases with reduced velocity further increasing the proportion of the total penetration that is due to leaks.

The velocity of air flow through HEPA filter material is about 5 to 10 feet per minute, depending on the number of filter material pleats in the assembled filter. At this velocity the flow is in the laminar region where the pressure drop across the filter material varies directly with the flow. Thus, at 20% of rated flow the pressure drop across the filter will fall by a factor of five.

In the range of 1 inch pressure drop across the filter and across pinhole leaks, the flow through the pinholes is in the turbulent region and varies as the square root of the pressure drop. With a five-fold reduction in pressure drop, the flow through pinholes decreases by $(5)^{1/2}$ or 2.24. Assuming the flow through a HEPA filter is 1,000 CFM at rated conditions, it will be 200 CFM at 20% of rated flow. If a leak through a pinhole passes 1 CFM at 1 inch of pressure drop (rated condition), it will pass 0.45 CFM at 0.2 inches of water. The proportion of leakage to total flow will increase from 1/1,000 to 0.45/200 or 2.2 fold.

In addition the penetration of the filter material will fall with reduced velocity. If it is assumed that at 20% of rated flow the penetration falls by a factor of three, then the effect of the pinhole leak with respect to filter material penetration will increase by a factor of 6.6. In any event it is much easier to discriminate between filters with leaks at reduced flow than at rated flow. Filters with significant amounts of leakage may actually show higher penetrations at reduced flows. Any filter that has a tendency to not show significant reductions in penetration at reduced flow will have pinhole leaks.

Errors of Testing

The tests described above will only produce valid results when the tests are run with equipment that is in good condition and by personnel that are expert in their use. Results obtained by personnel that are inadequately trained using equipment that is in poor condition will yield results that are not correct. Even under the best of conditions, a constant program of checking results, both within individual laboratories and amongst laboratories is required to ferret out errors and insure the validity of data that is developed. The discussion below deals with only some of the errors that can creep into the testing of HEPA filters.

Hot DOP

The control of particle size is essential to obtaining valid results from

the hot DOP test. Instrumentation for determining particle size must be available and used frequently enough so that the operator is sure that the particle size has not strayed from the distribution required. Adjustments to the temperatures of the hot DOP, the vaporizing air or the cooling air quantity or temperature may be needed to keep on track. Especial care will have to be taken if different methods of measuring particle size are introduced. The results obtained by new particle size measuring techniques will have to be carefully correlated with the old methods before they are put into use.

All laboratories that use either small laboratory, hot DOP or large systems for testing full-scale filters must be equipped with flow measuring equipment for checking the calibration of flow measuring instruments. Where gas meters are used, meter provers that use water displacement techniques (gasometers) to insure calibration of the instruments must be available. Pitot tubes must be used for calibrating larger flows. The personnel dealing with the test installations must be expert in correcting for changing conditions of temperature, atmospheric pressure, and relative humidity, insofar as they affect readings of flow measuring instrumentation. Errors in flow measurement will change the particle size of DOP smokes and the velocity of air through the filters giving false readings for the filter pressure drop and penetration.

Temperature measuring instruments and controls must be carefully calibrated before use and periodically checked thereafter to insure that they are reading correctly. Even sophisticated controllers like thermcouple activated controllers can be in error by significant percentages and must be constantly checked against calibrated, mercury-in-glass thermometers and laboratory thermcouple instruments. Temperature readings that are incorrect will affect the DOP smoke particle size, the concentration of the DOP, and the volume of gases read by flow instruments.

The forward-light scattering photometer used in both the hot and cold DOP test is an especially tricky instrument to use correctly. Only a knowledgeable and experienced operator can tell when he is obtaining valid results.

The concentration of DOP in the test system will affect readings. The effect will be particularly significant if the concentration of DOP in the system is allowed to change after the 100% point has been set on the photometer. If the concentration falls after that time, penetration

readings will be low possibly passing defective filter materials and filters. Conversely, if the concentration rises, penetration readings will rise, causing acceptable filters to be failed. Only frequent checking of the 100% setting can avoid those errors.

Filters made of glass fibers are prone to build-up of electrostatic charges. These charges can significantly reduce the penetration results obtained during test. In service the electrostatic charge can leak off, especially in the presence of high relative humidity, and permit increased and possibly excessive penetration of dangerous materials. Special efforts must be made when testing fiber glass filters to ensure that electrostatic charges are not giving false, high efficiency readings. High humidity air should be drawn through glass fiber filters until the test operator is satisfied that electrostatic charges have leaked off. Electrostatic effects can be quite large. For example, a filter used in an Italian gas mask canister consisted of a resin carded into wool. On initial test this filter tested very high on the DOP test. After the electrostatic charge leaked off it tested only about 50% efficient, an almost incredible drop.

Cold DOP

The Laskin nozzles, used for generating the DOP aerosol must be in good condition. The holes for the compressed air and for the DOP must be correctly sized. One nozzle is required for each 500CFM increment in the system to be tested. If these precautions are not followed, the particle size distribution or the system concentration will be off from what is required to get reproducible results.

The smoke before and after the filter must be mixed well enough so that uniformity is ensured. Results of the test will not be valid if such is not the case. Uniformity ahead of a filter bank or of a filter requires adequate space for mixing the smoke and the air stream. If the installation is built with too little space between prefilters and filter banks or between multiple filter banks, no valid tests can be made. A piping system may be required to introduce the DOP smoke at various points in the system. The photometer can be used to determine the uniformity of the test smoke ahead of the filter or filter bank. Considerable ingenuity is required to solve these problems when dealing with contaminated systems where it would be inadvisable for men to enter.

If readings that are representative are to be taken after filters and filter banks, then space and/or baffles are required to be sure the air stream is

mixed with the penetrating smoke. In contaminated systems, where men can't enter, or where there is insufficient space, adequate testing cannot be performed. Methods of probing the downstream side of the filter and the filter bank will have to be provided to allow adequate leaktesting.

The forward-light scattering photometer is used for the cold DOP test in a similar matter to that for the hot DOP test. The same precautions and possible errors can result as were noted in the description of errors of the hot DOP test.

As mentioned previously, once filters are installed in the field, whether individually or in filter banks, only cold DOP tests can be performed. These tests cannot be regarded as efficiency tests--only leak tests.

Burstead and Fuller[5] say "In-place tests of HEPA filters are made with a polydispersed aerosol of dioctyl phthalate (DOP) droplets having a light-scattering mean diameter of 0.7μ (as opposed to quality assurance tests of these filters, which are made with a monodispersed DOP aerosol having a mean particle size of 0.3μ). . . .Although test results are expressed as 'percent efficiency', all of the in-place tests are basically leak tests. When the tests are made of components of known efficiency, the numbers give an indication of system efficiency."

Frequency of Testing

Even after installation and initial testing no relaxation of vigilance is justified. "A basic principle of exhaust air-cleaning systems is that no credit can be taken for safety if the HEPA filters and adsorbers are not tested regularly." [5] It is not sufficient to test only when changes are made. Some systems, where environment is especially severe, may require monthly testing to ensure the integrity of the installation. It must be remembered that, after installation, only leak tests are possible and then only if the installation has been designed with that in mind. No efficiency tests are possible for installed HEPA filters.

Filter and Installation Leakage

General

The most important factor that threatens the integrity of any HEPA filter

installation is leakage. Leakage can make a mockery of claimed efficiencies. A leak of 50 CFM out of a total of 5,000 CFM (a bank of five filters) will increase the filter penetration by 1% of the total particulate, changing a claimed filter efficiency of 99.95% to 99%, an increase of twenty-fold in penetration. Similarly a leak of 500 CFM will reduce the filter efficiency to 90%, an increase of particulate penetration of two hundred-fold over the stated 99.95%. Leaks of that order of magnitude cannot be detected by simply monitoring the pressure drop across the filters. A 1% leak will change filter bank pressure drop by 1%--i.e. a filter pressure drop of 2 inches of water will fall by 0.02 inches of water. A 10% leak will cause that same filter to fall in pressure drop by only 0.2 inches of water.

A leak of 50 CFM will require a hole of about 1.5 square inches--one or several openings providing that leakage area.

Leakage is such an everpresent danger and so important that much of the ANSI/ASME standard[6] is devoted to finding and eliminating it from nuclear air cleaning installations. Burstead and Fuller[5] say "Initial in-place tests of 50 HEPA filter banks at one AEC installation revealed 31 banks (62%) that would not meet the specified 'efficiency' of 99.95%." (Significant leakage was indicated.)

With leakage so important and so prevalent in the nuclear industry, additional thought and effort should be devoted to finding alternative methods to those now used for reducing leakage. For example, the present configuration of HEPA filter may encompass 50-100 running feet of filter material in the pleats that are inserted into the filter frame. That means that double that length (counting both sides) of filter material edge, must be sealed by the mastic used, to the filter frame. There are other possible filter configurations that will require much less edge sealing.

The edge of the filter frame is flat. It may be one inch wide. If the filter frame edge were tapered to 3/8 inches, it would press into the gasket seals with almost three times the pressure as at present.

Systems can be devised to minimize the effect of leakage at the sealing point of the mastic seals and between the filter edge and the filter frame.

Alpha Recoil Effect

McDowell, et al[7], discuss a phenomenon that has been inadequately

investigated. Materials (such as plutonium) that emit alpha particles do not rest quietly on the surface of HEPA filters after they are collected. Instead movement of particles, caused by the recoil produced by the emission of the alpha particles, will cause penetration of the filters with time. The recoil is especially important when analyzing penetrations of multiple filter installations. For example, decontamination factors (DF--the reciprocal of the filter penetration; the penetration of a HEPA filter being 0.03% or 0.0003, the reciprocal or DF is 3333) of 2-10 have been found across the third and fourth filters in a 3-4 filter system instead of the 3×10^3 decontamination factor found across the first filter, when observations are made over short periods of time.[7]

The only way to deal with the alpha recoil effect is to replace filters when they have retained quantities of plutonium or other radioactive, alpha-emitting materials sufficient to increase penetration over time to undesirable levels.

The added effects of alpha recoil raise into question the overall penetration predicted for multiple HEPA filter installations.

Filter Paper Leakage

The greatest danger of high HEPA filter penetration may be due to electrostatic effects. If the filter materials and assembled filters pass penetration tests due to electrostatic effects, then the loss of the electrostatic charge will cause unacceptable levels of filter penetration. Since there is no way of detecting such deterioration of efficiency after the filter is installed in the field, great care must be exercised in the test of filter materials and of assembled filters by means of the hot DOP test to insure that electrostatic charges are not affecting the results. Discharging electrostatic effects with high humidity air has been discussed.

Cracking of filter papers at folds may prove to be a source of filter leakage. Great care must be exercised to insure that papers are manufactured that are soft and pliable--not brittle.

Damage, during packaging, shipment, unpacking, or installation, can cause holes to be poked through the filter material.

Leakage of Filter Assembly

The leakage of the assembled filter is proven by the fact, as recorded

before, that the paper, of which the assembled filter is made, has lower penetration, by a factor of 10 (0.005 to 0.003% compared to 0.05 to 0.03%), than the assembled filter.

The difficulty of sealing the many running feet of filter material edge to the filter casing has already been discussed.

The corners of the filter frame are a weak point of the assembly design. Leakage can occur at the corners where the sides of the frame may be joined.

Distortion of the filter, due to stresses introduced in shipment or more probably when clamping the filter to the filter mounting frame, can cause leaks to develop. Temperature changes can set up similar stresses and cause filter assembly leakage.

Installing filters so that spacers are horizontal will cause sagging and failure of the filter.

Defects or damage to the edge of the filter frame that seals to the steel mounting frames will cause leakage.

Filter Mounting Frames

Filter mounting frames must be designed so that they are rigid, can take the forces required due to air flow and filter clamping bolts with minimum deflection. They must have a minimum of welded joints. Each welded joint introduces a chance for leakage and a rough surface that can cause a leak when the filter is installed.

Leakage between the walls of the air flow plenum and the filter mounting frame can easily develop. If the plenum is made of concrete, eliminating leakage is especially difficult. Cracking of concrete would cause a continuing concern with the integrity of the filter assembly.

Even where the air plenum is made of steel, welding of the filter mounting frames to the walls of the plenum is an area where leaks can easily appear due to improper welds, or breaks in the continuity of the welds. Only after the most careful testing can unacceptable leakage be ruled out.

It is interesting to note that the ANSI/ASME standard [6] regards 0.1% of the system design air flow as acceptable leakage (see 7.5.2, 9). That

means that the maximum efficiency of an acceptable filter bank must be assumed to be 99.9%. Later we will see that ERDA assumes an efficiency of 99.95% for a testable stage of HEPA filtration. How can it be higher than 99.87%--0.1% subtracted for frame leakage and 0.03% subtracted for acceptable penetration of HEPA filters?

Mounting Filter Frame on Filter Mounting Frame

Some of the sources of leakage when mounting filters have already been covered. Nevertheless, it would be well to stress the great care that must be taken when bolting filters to the mounting frame. As much as 80% compression of the rubber gasket between the filter mounting frame and the filter is needed to effect a satisfactory seal. That compression requires a loading of 20 psi on the gasket or about 1400 lbs. loading for the entire 24" x 24" filter. The loading is caused by tightening the bolts and lugs (normally about eight per filter). As mentioned previously, distortion of the filter must be carefully watched. Corrosion of the tightening bolts are a continuing hazard. Relaxation of bolt pressure due to temperature changes is an ongoing possibility.

Catastrophic Filter Failure

Normally it is thought that radioactive processes are fully contained by walls of steel and concrete. Frequently that is true. However, all radioactive processes that have gas emissions have chinks in the armor surrounding the process. Those chinks take the form of banks of HEPA filters. The HEPA filter material is a relatively weak paper. An assembled filter will fail at pressure differentials of 10 inches of water gauge or 50 lbs/sq ft. Explosions can build up pressures of 50 psi or 144 times as great.

The mastics, gaskets, frames and filter materials have temperature limitations. Sustained temperatures, exceeding the temperature limitations of the HEPA filter materials can cause massive failures.

Wetting the filters will cause pressure differentials to develop that exceed the capabilities of the filter and it will fail.

Fires and explosions will cause filters to fail with possibly very serious consequences. On September 11, 1957 a fire and explosion, at the Rocky

means that the maximum efficiency of an acceptable filter bank must be assumed to be 99.9%. Later we will see that ERDA assumes an efficiency of 99.95% for a testable stage of HEPA filtration. How can it be higher than 99.87%--0.1% subtracted for frame leakage and 0.03% subtracted for acceptable penetration of HEPA filters?

Mounting Filter Frame on Filter Mounting Frame

Some of the sources of leakage when mounting filters have already been covered. Nevertheless, it would be well to stress the great care that must be taken when bolting filters to the mounting frame. As much as 80% compression of the rubber gasket between the filter mounting frame and the filter is needed to effect a satisfactory seal. That compression requires a loading of 20 psi on the gasket or about 1400 lbs. loading for the entire 24" x 24" filter. The loading is caused by tightening the bolts and lugs (normally about eight per filter). As mentioned previously, distortion of the filter must be carefully watched. Corrosion of the tightening bolts are a continuing hazard. Relaxation of bolt pressure due to temperature changes is an ongoing possibility.

Catastrophic Filter Failure

Normally it is thought that radioactive processes are fully contained by walls of steel and concrete. Frequently that is true. However, all radioactive processes that have gas emissions have chinks in the armor surrounding the process. Those chinks take the form of banks of HEPA filters. The HEPA filter material is a relatively weak paper. An assembled filter will fail at pressure differentials of 10 inches of water gauge or 50 lbs/sq ft. Explosions can build up pressures of 50 psi or 144 times as great.

The mastics, gaskets, frames and filter materials have temperature limitations. Sustained temperatures, exceeding the temperature limitations of the HEPA filter materials can cause massive failures.

Wetting the filters will cause pressure differentials to develop that exceed the capabilities of the filter and it will fail.

Fires and explosions will cause filters to fail with possibly very serious consequences. On September 11, 1957 a fire and explosion, at the Rocky

Flats plant in Colorado damaged or destroyed all of the HEPA filters in one of the prefiltering systems and in the main filter plenum which contained about 620 HEPA filters. [8] The event was caused by spontaneous combustion in plutonium "skulls" (casting residues). From 10 P M on September 11 till dawn black smoke billowed from the stack of the exhaust air system. For an added six days no measurement is available to estimate the discharge of dangerous, radioactive plutonium, due to electrical failures associated with the test equipment. On September 19, 1957, 8 days following the accident, average readings of radioactivity taken for the day were 16,000 times higher than allowable.

It is estimated that 14 to 20 kilograms of plutonium burned in the fire. In addition, plutonium that had accumulated on the banks of prefilters and on the 620 main plenum filters (which had not been changed for four years) was emitted to the outside atmosphere. [9] The main plenum filters still had plutonium deposits from catastrophic events that occurred in July 1954, September, 1955, and June 1957. [8] No estimates are available of the quantity of plutonium retained on the main plenum filters. About 1.5 kilograms of plutonium were estimated to have accumulated on the prefilters. Several kilograms of plutonium may have accumulated on the main filter.

The seriousness of this event may be judged from the fact that 1 µg (one one millionth of a gram) of plutonium can be a fatal dose. One kilogram is one billion µg. At least 20 kilograms of plutonium were emitted to the surrounding community.

Multiple HEPA Filters Against Plutonium Aerosols

Gonzales, et al[4] made an effort to correlate HEPA filter efficiency, when filtering plutonium smokes, with hot DOP test results and to determine the efficiency of three HEPA filters in series. To the author's knowledge it is the only such attempt that has been made.

The Energy Research and Development Administration (ERDA) had assumed penetrations of 0.0005 for stages of HEPA filters that could be tested and 0.002 for HEPA filters in untestable stages. One of the purposes of the investigation described in that article was to confirm these penetrations when filtering plutonium aerosols.

The concentration and particle size of plutonium aerosols was determined for five operations that generate such aerosols. The concentration in the five systems ranged from an average of 2.0×10^2 to 1.5×10^5 dis/s-m^3 (disintegrations per second per cubic meter). The particle size ranged from an amad (activity mean aerodynamic diameter) of 4.1 to 0.5 µm. The lowest particle size coincides with the highest concentration.

For various reasons the decision was made to reproduce the effluents in the laboratory instead of testing in the field. Whatever the validity of the reasons for this conclusion, duplicating field smoke characteristics in the laboratory is fraught with difficulties and errors.

Two of the reasons given are as follows:

1. "The possibility of obtaining adequate information by means of a field test program was discarded because existing multiple HEPA filter systems handling large quantities of plutonium did not permit testing of each individual stage."[4] If so, doubt is cast on the claimed efficiencies of existing HEPA filter installations.[5]

2. "Field testing could not distinguish between plutonium aerosol penetration through filter media and penetration around improperly installed filters." [4] Leakage around filters is so prevalent that it could not be ruled out in any field test.

Concentration Problems

In order to obtain readings after two and three HEPA filters in series, concentrations of plutonium particles of 3.3×10^{10} dis/s-m^3 were generated in the test equipment. They were 2×10^5 to 1.6×10^8 (5 to 8 orders of magnitude) greater than the concentrations measured in the field. Such deviations from normal concentrations introduce doubt about the results. Difficulties were caused by such high concentrations. Sampling times before the first HEPA filter could only be 0.5 or 1.0 minute while sampling times after the second HEPA filter were up to 2 hours. No information on the sampling times after the third HEPA filter is given. However, it had to be much longer. Such widely varying conditions of test raise questions about the uniformity of test conditions and about the reliability of concentration and penetration checks during a test.

First stage HEPA filters could only be used for one test. The reason is not

discussed but the inference is that plugging of the first stage HEPA filter must have caused problems. What was the buildup of pressure drop with time? Such rapid plugging certainly increased the efficiency of the first stage filter rapidly. This constantly changing efficiency cast doubt not only on the readings of the first stage filter but of the two subsequent stages as well.

There is a great deal of discussion of the effect of particle size on efficiency but none at all about the effect of concentration on filter efficiency. It may be that the effects attributed to particle size are more likely due to enormous deviations from ranges of concentration found in the field. In any event much experimental work remains to be done to prove that concentrations, many orders of magnitude greater than those found in the field have no effect on HEPA efficiency.

The concentrations were so high that, assuming a DF (decontamination factor) of 2×10^3 the concentration after the first HEPA filter was 50 times higher than the highest concentration measured in the field. Isn't it possible that concentration effects cause the filters to have higher efficiency? According to data developed in this article[4], the penetration of the second stage HEPA filter is 2 to 3 times as great as the penetration of the first stage HEPA filter. The penetration of the third stage HEPA filter is 8 to 9 times that of HEPA 1. Conclusions about the efficiency of three HEPA filters in series is based on the recorded efficiencies of each of the stages as measured.

If concentration is the effect causing higher efficiencies for the first two stages then those results must be eliminated because the first HEPA filter that is in the concentration range found in the field is the third stage filter. The third stage filter is one order of magnitude lower in efficiency than the first stage filter. Indeed, in one set of tests (one-half normal flow) the third stage filter shows a penetration that is over 60 times as high as that of the first stage filter.

If it is assumed that the penetration result of the third stage filter applies to the first stage filter in an actual case, due to the concentration effects, ERDA guidelines would be exceeded. The penetration of the third stage filter (in the one-half normal flow test) was 740×10^{-6}. That result would exceed the ERDA guideline of 500×10^{-6} for the first stage filter. If the second and third stages fell off by an order of magnitude then

their penetration would be 7400 x 10^{-6} which also exceeds the ERDA guideline of 2000 x 10^{-6}. It must be recalled that these penetrations do not account for leakage effects.

Leakage Effects

In order to minimize the effects of leakage, very small HEPA filters were used in these experiments[4]. A normal filter size used in systems is 24" x 24" and has a capacity of 1,000 CFM (cubic feet per minute). The filters used in these experiments had a capacity of only 25 CFM. Their size is not given. Great care was exercized to ensure that filter leakage was reduced to a minimum or eliminated.

The summary qualifies, "However, as this study was done under ideal conditions to ensure that only aerosol penetration (not leakage around the filter) was monitored, proper installation of quality-control-tested HEPA filters is of prime importance to achieve the decontamination factors determined here." In line with this conclusion it is fair to ask--what leakage criteria should be allowed for multiple filter installations that have hundreds of thousands of CFM capacity instead of 25 CFM?

Particle Size Effects

The aerosol, generated for the tests described in the report under discussion, was produced by a nebulizer into which high concentrations of milled plutonium oxide particles in water suspension was charged. We have already discussed some of the reservations about conclusions produced by the enormous discrepancy between concentrations measured in field installations that generate plutonium aerosols and those that had to be generated in the laboratory test apparatus. The particle size and shape of the plutonium particles used in these experiments must also be questioned.

The particles of plutonium oxide were milled, both in dry ball milling systems and in a wet, centrifugal, ball mill. Great difficulty was experienced in achieving the particle size distribution found in a recovery facility. In fact, the lower end of the particle size spectrum found in that installation was never quite duplicated. A recovery facility had a submicron aerosol of plutonium that was 0.3-0.5µm amad (activity median aerodynamic diameter). Aerosols as small as 0.1µm amad were produced

by the recovery facility. The smallest particle size aerosol generated in the laboratory had a range of 0.22-0.66µm amad.

Particle size distribution was determined by means of eight-stage Andersen impactors. No work is described that shows that plutonium-oxide smokes show similar filtration properties when filtered by HEPA filters independently of how they are generated. For example, are smokes generated by ball-milled materials as penetrating as smokes produced by thermal methods, as is probably the case for plutonium recovery operations? Milled particles are probably angular and irregularly shaped. Thermally generated particles may be spherical. It is quite possible that both will behave differently in both the Andersen sampler and in HEPA filters. It is questionable that only the particle size distribution determined by an Andersen sampler is important in studying the penetration of HEPA filters by plutonium oxide aerosols.

Studies to determine the most penetrating particle size (SMP) produce some interesting results. At this point it must be explained that in order to reduce anamolies in observed plutonium penetration data of HEPA filters, the HEPA filters were separated into two categories--high penetration on the DOP test and low penetration filters. The low penetration filters had results of 20 to 150 x 10^{-6} by 0.3 µm DOP test.

The high penetration filters had penetrations of 151 to 300 x 10^{-6} by 0.3 µm DOP test. Table III of the article [4] shows no measurable penetration of the second, low DOP penetration HEPA filter (in a set of three in series), for particle sizes between 2.1 and >11.0 µm. Similarly, Table V shows no measurable penetration of the second, low DOP penetration HEPA filter, for particle sizes between 1.5 and >5.4 µm. Table V shows relatively high penetration results for the second, higher penetration HEPA filter, in the size range from 1.5 to >5.4 µm. Isn't it logical to ask the question as to whether filter leakage is producing such results?

If filter leakage is influencing results, then the suprising conclusion that o.44-0.96 µm particle size range is the most penetrating one is subject to question. Leaks would allow much larger particles than can be readily filtered to pass through the HEPA units. It would cause the SMP to be pushed to larger size ranges.

In at least two instances test methods have been changed so as to obtain readings within range of the test methods. Two different instruments

were used to measure the radiation found on the samples after the first HEPA filter as opposed to the instrument used to test the samples taken after the second and third HEPA filter. Changing test methods always introduces the concern as to whether the two produce comparable results.

Similarly the sample flow for the Andersen sampler was changed from $0.47 \times 10^{-3}\ m^3/s$ to $1.42 \times 10^{-3}\ m^3/s$--three times as much--in order to read smaller particle sizes. The following table shows penetrations of first stage HEPA filters that were in a low range of DOP penetrations ($20-150 \times 10^{-6}$) compared to first stage HEPA filters that were in a high range of DOP penetrations ($151-300 \times 10^{-6}$) where the Andersen sampler flow was $0.47 \times 10^{-3}\ m^3/s$ and where the Andersen sampler flow rate was $1.42 \times 10^{-3}\ m^3/s$.

Andersen Sampler Flow $0.47 \times 10^{-3} m^3/s$				Anderson Sampler Flow $1.42 \times 10^{-3} m^3/s$			
Part. Size µm	Mean Pen. $\times 10^{-6}$ Low DOP	Mean Pen. $\times 10^{-6}$ High DOP	Ratio High/ Low	Part. Size µm	Mean Pen. $\times 10^{-6}$ Low DOP	Mean Pen. $\times 10^{-6}$ High DOP	Ratio High/ Low
>11.0	2.1	3.0	1.4	>5.4	0.44	13	29.5
7-11	1.7	1.9	1.1	3.4-5.4	0.36	13	36.1
4.7-7	1.0	1.7	1.7	2.3-3.4	0.23	14	60.9
3.3-4.7	1.2	1.5	1.3	1.5-2.3	0.20	30	150
2.1-3.3	1.8	3.7	2.0	0.96-1.5	0.74	39	52.7
1.1-2.1	6.8	11	1.6	0.44-0.96	5.8	64	11.0
0.65-1.1	20	27	1.4	0.22-0.44	2.8	71	25.4
0.43-0.65	28	26	0.9	0.12-0.22	2.7	54	20
<0.43	18	13	0.8	<0.12	1.0	36	36
Average Ratio----------			1.4				46.8

Comparing ratios of penetrations captured on each stage of the Andersen sampler for the high versus the low DOP penetration filters, a resultant, average ratio of 1.4 is obtained where the sample flow rate is low. At the higher sampling rate that same ratio increases to 46.8. Did changing the sample flow rate cause such a dramatic change, or is there some other mechanism at work that produces far higher ratios of penetration, comparing high versus low DOP penetrations than that found on the DOP test (where the highest possible ratio is 15)?

Radon and Thoron Daughters

One of the errors corrected in the work described by Gonzales et al is as follows: "Some preliminary data were rejected because of sample contamination by radon and thoron daughters. This problem was eliminated by waiting several weeks between sample collection and counting, to permit radioactive decay of these short-half-life materials."

No explanation is given. How was the problem first recognized? How was it determined that only radiation due to radon daughters and thoron daughters was escaping? Could plutonium particles have been escaping during the several week waiting period due to alpha recoil effects? Is the penetration of the HEPA filters being understated? Are radon and thoron daughters always associated with plutonium oxide particles? If so, must adsorption filtration always be used in plutonium oxide filtration systems? There are airborne plutonium filtration systems that have no adsorption equipment.

Filters in Series

The conclusion reached by Gonzales et al[4] that three HEPA filters in series show penetrations, when filtering plutonium aerosols, in line with ERDA guidelines is certainly premature. Testing aerosols at concentrations that are 2×10^5 to 1.6×10^8 as great as those found in the field neglects what must be serious effects of concentration on penetration. Indications are that penetrations of HEPA filters are increased at lower concentrations--as witness the 60-fold increase in penetration of a third stage HEPA filter as compared to a first stage filter.

The effects of particle size distribution and particle shape have not been adequately ruled out as contributing to lower penetration readings than will be found in field installations. The plutonium aerosols generated in the laboratory to test filters in series had larger particle size distributions and more irregularly shaped particles than existed in the effluent from the plutonium recovery facility.

The tests described in the report[4] studied penetrations of three HEPA filters in series. It is common practice to use five and even six HEPA filters in series. The finding that the filter penetration increases in each

subsequent filter stage after the first one and that the third stage penetration was borderline with respect to ERDA guidelines, certainly ensures that the penetration of stages of filtration, after the third HEPA filter in a series, will certainly exceed ERDA guidelines.

None of this discussion includes leakage effects. Since, even the 25 CFM filters tested show signs of leakage, full-scale, field installations with multiple filters in each bank and multiple banks, will have significant leakage that will increase penetrations even further. For example, the ANSI guidelines[6] allow 0.1% air leakage of the filter frame assembly. As previously shown that means that the minimum penetration that can be expected in a filter bank is 1×10^{-3} plus 3×10^{-4} (allowable HEPA filter penetration), without taking into account all the multiple other leakage possibilities.

Conclusions

1. The HEPA filter evolved from filters developed for gas masks needed to protect against chemical warfare smokes.

2. More sensitive test methods than previously required led to the development of the small, hot DOP (dioctylpthalate) test used for filter material development.

3. The hot, DOP test, large enough to obtain penetration results on full-scale (1,000 CFM) filters is used to control quality of filters used in the nuclear industry.

4. The cold, DOP test is available for leakage testing of both individual filters and of assembled filter banks. It is not an efficiency test.

5. Two flow testing accentuates the difference between assembled filters that have pinhole leaks and those that do not.

6. Only constant cross-checking and the use of experienced operators can maintain the accuracy of all tests.

7. Filters and filter materials made of glass fibers are subject to buildup of electrostatic charges that raise apparent efficiency. In use, at high relative humidity, these charges will leak off. Air at high relative

humidity must be passed through such filters till the operator is certain that the electrostatic charge has leaked off.

8. Tests of installed filters are essential to ensure the maintenance of the HEPA filter efficiency. The frequency of testing required depends on many factors but may be as much as monthly.

9. Leakage of filter materials, assembled filters, the gaskets between assembled filters and filter frames, filter frames, and the point of connection between filter frames and plenums must be meticulously eliminated if the efficiency of the HEPA filter is to be relied upon.

10. In spite of all precautions, HEPA filters are basically fragile and are subject to catastrophic failure due to fire and explosion, allowing unacceptable emission of radioactive materials.

11. Inadequate attention has been paid to the alpha recoil effect which can increase the emission over time of radioactive, alpha-emitting materials such as plutonium.

12. Gonzales et al[4] describes an attempt to correlate individual filter, hot, DOP test results of three HEPA filters in series with laboratory tests against artificially generated plutonium aerosols. The article raises the following questions in the mind of a reader:

a. Only 25 CFM filters have been tested. The scale-up factor between these filters and installations that may have hundreds of filters with capacities of 1,000 CFM each is so large that the applicability of the results (especially with regards leakage) is doubtful.

b. The particle size of the artificially generated plutonium aerosol, even as measured during the tests, never included the lower ranges of the particle size found in one of the process discharges of plutonium aerosol that the tests attempted to duplicate.

c. The particle shape of the artificially milled plutonium particles could not duplicate the shape of thermally generated particles.

d. The article raises the disturbing problem that samples had to be held for weeks in order to allow radon and thoron daughters to decay. The

assumption is that adsorbed gases on penetrating particles was causing high results and yet there are installations that make no attempt to capture radon and thoron daughters.

e. In order to obtain penetration results of three filters in series, plutonium concentrations 2×10^5 to 1.6×10^8 times concentrations found in field installations had to be used.

f. The enormous concentrations caused exceedingly rapid plugging of the first HEPA filter and such rapid changing of test conditions that the penetration results are subject to grave doubt, probably being overstated.

g. Only at the third stage filter was the concentration in the range of that found in field tests. The third stage filter had a penetration that was 9 times as high and in one series of tests 60 times as great as the first stage filter.

h. Installation leakage, concentration effects during the tests, particle size differences between tests and field aerosols cast doubt on the conclusion that ERDA guidelines of filter penetration of 500×10^{-6} for filters in testable stages and 2000×10^{-8} for filters in untestable stages have been met. On the contrary indications are that filter penetrations for plutonium aerosols may easily exceed ERDA guidelines.

REFERENCES

1. Technical Manual, TM 3-215, *Military Chemistry and Chemical Agents,* April 21, 1942

2. Robert H. Avery, Syracuse N. Y., *Selection and Uses of HEPA and ULPA Filters,* Heating, Piping and Air Conditioning, January, 1986, pages 119-123

3. Flanders Filters, P. O. Box 1708, Washington, North Carolina, *HEPA Filters and Filter Testing,* 3rd Edition

4. Manuel Gonzales, John C. Elder, Marvin I. Tillery, *Performance of Multiple HEPA Filters Against Plutonium Aerosols,* Los Alamos Scientific Laboratory of the University of California, Los Alamos, New Mexico, Report No. LA-6546, November, 1976

5. C. A. Burstead and A. B. Fuller, *Design, Construction, and Testing of High-Efficiency Air Filtration Systems for Nuclear Application,* Oak Ridge National Laboratory, January, 1970

6. ANSI/ASME, *Testing of Nuclear Air-Cleaning Systems,* N510, 1980

7. W. J. McDowell, F. G. Seeley, M. T. Ryan, *Penetrations of HEPA Filters by Alpha Recoil Aerosols,* Health Physics, Pergamon Press, printed in Northern Ireland, Vol. 32, May 1977, page 445

8. Owen, J. B., *Review of the Exhaust Air Filtering and Air Sampling, Building 71,* Rocky Flats Plant, Golden, Colorado, March 14, 1963, unpublished

9. Carl J. Johnson, *Comments on the 1957 Fire of the Rocky Flats Plant in Jefferson County, Colorado,* reported to the Conference on the Relation of Environmental Pollution to the Cancer Problem in Colorado of the American Center Cancer Research Center and Hospital, Lakewood, Colorado, September 26, 1980

10. Carl J. Johnson, *Evaluation of the Hazard to Residents of Areas Contaminated with Plutonium,* International Radiation Protection Association, IVth International Congress, Paris, 24-30 April, 1977