RESEARCH, DEVELOPMENT AND DEMONSTRATION (RD&D) PERMIT APPLICATION

HYDROTHERMAL PROCESSING UNIT

Los Alamos National Laboratory
Los Alamos, New Mexico 87545
EPA I.D. No. NM0890010515

March 1993

3324

RESEARCH, DEVELOPMENT AND DEMONSTRATION (RD&D) PERMIT APPLICATION
HYDROTHERMAL PROCESSING UNIT

TABLE OF CONTENTS

1.0 INTRODUCTION . . . . . .

2.0 GENERAL INFORMATION . . . . . .
- 2.1 RCRA Permit Status . . . . . .
- 2.2 Site Location . . . . . .
- 2.3 RD&D Unit Location . . . . . .
- 2.4 RD&D Project Description . . . . . .
- 2.5 Comparison to Other Technologies . . . . . .

3.0 WASTE DESCRIPTION . . . . . .
- 3.1 Waste to be Treated in the RD&D Unit . . . . . .
- 3.2 Waste Generated by RD&D Treatment . . . . . .
- 3.3 Waste Analysis . . . . . .

4.0 PROCESS ENGINEERING . . . . . .
- 4.1 Description of Treatment Unit . . . . . .
  - 4.1.1 Waste Feed System . . . . . .
  - 4.1.2 Treatment Unit Components . . . . . .
  - 4.1.3 Data Collection Equipment . . . . . .
  - 4.1.4 Diagnostic Equipment . . . . . .
- 4.2 Pollution Control . . . . . .
- 4.3 Ancillary Waste Storage Area . . . . . .
- 4.4 Operating Parameters . . . . . .

5.0 RESEARCH PLAN . . . . . .
- 5.1 Objective . . . . . .
- 5.2 Research to Date . . . . . .
- 5.3 Parameters and Monitoring Frequency . . . . . .
- 5.4 Monitoring Plan . . . . . .
  - 5.4.1 Process Monitoring . . . . . .
  - 5.4.2 Effluent Monitoring . . . . . .
  - 5.4.3 Equipment Shut Down . . . . . .
- 5.5 Inspection Procedures . . . . . .

6.0 QUALITY ASSURANCE/QUALITY CONTROL . . . . . .
- 6.1 Calibration Procedures . . . . . .

7.0 DATA AND RECORDKEEPING . . . . . .

8.0 SAFETY PLAN . . . . . .

TABLE OF CONTENTS
(continued)

9.0 PERSONNEL QUALIFICATIONS AND TRAINING . . . . . .

10.0 CLOSURE PLAN . . . . . .
10.1 Closure Performance Standard . . . . . .
10.2 Maximum Waste Inventory . . . . . .
10.3 Procedures to Close the Unit . . . . . .
10.4 Date and Schedule for Closure . . . . . .

11.0 DURATION OF PERMIT . . . . . .

12.0 CERTIFICATION . . . . . .

Tables

Table 1 Chemicals Treated by Hydrothermal Processing and Typical Destruction Efficiencies.

Table 2 Inorganic Compounds Processed through Hydrothermal Processing Unit.

Table 3 Complex Wastes Treated by Hydrothermal Processing.

Figures

Figure 1 Site Map

Figure 2 Location of Building 43 at Technical Area 9

Figure 3 Layout of Hydrothermal Processing Unit

Figure 4 Schematic of Treatment Process

Attachments

Attachment 1 Waste Analysis Plan - General LANL Procedures

Attachment 2 Diagnostic Equipment and Analytical Techniques

Attachment 3 Standard Operating Procedures (SOP)

Attachment 4 Supporting Laboratory Data - Summary of Previous Research

TABLE OF CONTENTS
(continued)

Attachment 5 Inspection Record Form (IRF)

Attachment 6 Contingency Plan

Attachment 7 Training Course Summaries

LOS ALAMOS NATIONAL LABORATORY
LOS ALAMOS, NEW MEXICO
EPA I.D. No. NM0890010515

RESEARCH, DEVELOPMENT AND DEMONSTRATION (RD&D) PERMIT APPLICATION

HYDROTHERMAL PROCESSING UNIT

1.0 INTRODUCTION

Environmental goals at Los Alamos National Laboratory (LANL) are to maintain and operate LANL facilities in an environmentally advantageous manner and to develop new technologies that will help the Department of Energy (DOE) in similar efforts at other facilities. New technologies are being developed to better meet the needs of corrective action, waste management, and environmental restoration. The principal mission of LANL is the application of science and technology to solve national problems including weapons development, energy supply, and conservation programs, while basic scientific research complements and strengthens its fundamental technical capabilities. LANL is owned by DOE, and is co-operated by DOE and the University of California.

LANL is requesting issuance of a Research, Development and Demonstration (RD&D) permit from the New Mexico Environment Department for the operation of a hydrothermal processing unit. The treatment technology will involve destruction of organic constituents in heated, pressurized water, and the objective of the RD&D permit will be to demonstrate the suitability of the technology for the disposal of wastes containing propellants, explosives, and pyrotechnics (PEP).

The EPA has encouraged the development of alternative technologies for the treatment of explosive wastes. Traditional methods for disposing of PEP wastes have been open burning or open detonation, both of which result in uncontrolled air emissions. Likewise, controlled incineration carries a liability for air pollution because of large quantities of Nitrogen Oxide (NO_x) compounds that are produced in the conventional combustion of PEPs. Moreover, while incineration can be used to treat PEP contaminated soils and other solids, it is not a satisfactory or economical method for the treatment of PEP contaminated groundwater or other aqueous liquids. A clear need exists for improved PEP waste treatment methods.

Hydrothermal processing has exhibited high destruction and removal efficiencies for a broad range of common solid and liquid wastes, including chemicals such as chlorinated aromatic solvents

that are typically difficult to destroy. In hydrothermal processing, the waste is mixed with oxygen and water, and the solution is heated and pressurized. Under conditions of high temperature and pressure, water becomes a dense fluid with transport properties like those of a gas, allowing rapid chemical oxidation and destruction of waste constituents. Hydrothermal processing is a unique treatment medium in which decomposition of organics can take place at temperatures lower than those required for conventional incineration, thus limiting the production of NO_x and ash. Decomposition of organic constituents occurs rapidly, on a time scale of seconds to minutes, and produces simple waste by-products (i.e., water, carbon dioxide, nitrogen, inorganic salts, and traces of carbon monoxide and nitrous oxide). Since the solid, liquid, and gaseous effluents are contained in the treatment system, the risk of uncontrolled pollution is minimized. All effluents are collected and will be tested before disposal or release to the environment.

The successful completion of this project will be one step in the eventual development of a full-scale treatment system capable of significantly reducing the volume and hazards of several waste streams generated within the DOE production complex. Initially, only RCRA hazardous wastes will be treated in the hydrothermal processing unit. If the treatment demonstration is successful, it is anticipated that LANL may request later modification or renewal of the RD&D permit to include treatment of mixed (hazardous and radioactive) wastes.

This RD&D application has been prepared in accordance with the requirements of Section 3005(g) of Resource Conservation and Recovery Act (RCRA), as codified under 40 CFR Section 270.65, and Section 901 of the New Mexico Hazardous Waste Management Regulations. The application also complies with general guidelines published by U.S. Environmental Protection Agency, "Guidance Manual for Research, Development, and Demonstration Permits Under 40 CFR 270.65" (EPA Document No. EPA/530-SW-86-008, July 1986).

2.0 GENERAL INFORMATION

2.1 RCRA Permit Status

It is the intent of the Laboratory to perform all activities in compliance with applicable local, state, and federal regulations and orders. Wastes, effluents, and emissions associated with the RD&D project will be handled according to established LANL procedures that are intended to ensure compliance with these regulations.

In November 1989, the New Mexico Health and Environment Department, Environmental Improvement Division, issued a RCRA permit (No. NM 0890010515-1) to LANL. The RCRA permit covers the

storage and treatment of a variety of on-site generated hazardous wastes. Regulated unit processes include storage in containers, treatment in tanks, and incineration. In March 1990, EPA issued its portion of LANL's RCRA permit, addressing the RCRA Hazardous and Solid Waste Amendments (HSWA) requirements. EPA's permit became effective on May 23, 1990.

LANL is also currently regulated under RCRA interim status requirements and is in the process of preparing a permit application covering the facility's mixed waste storage and treatment operations. Mixed waste units at LANL include container storage areas, surface impoundments, storage tanks, a controlled air incinerator, cementation units for process residue, an oxygen sparging unit for pyrophoric mixed waste, and two open burning/open detonation units for treatment of high explosive waste.

As a result of RCRA permitted and interim status compliance activities, LANL already has in place comprehensive environmental and health management programs meeting RCRA requirements. These programs address overall facility procedures for proper characterization and management of wastes, security, inspection, personnel training, preparedness and prevention, contingency procedures, and facility closure. Operation of the hydrothermal processing unit for RD&D purposes will not require development of any additional facility-wide programs or procedures to protect human health and the environment at the LANL facility. Waste analysis, inspection, training, safety, and closure procedures described in this permit application, therefore, are focused on operation of the RD&D unit itself.

2.2 Site Location

LANL and the residential communities of Los Alamos and White Rock are located in north central New Mexico on the Pajarito Plateau, situated west of the Rio Grande on the eastern slopes of the Jemez Mountains. The LANL facility covers approximately 111 square kilometers (27,500 acres) in and adjacent to Los Alamos County, and includes 34 active Technical Areas. A site map is provided as Figure 1.

2.3 RD&D Unit Location

The hydrothermal processing unit is located in Technical Area 9 (TA-9). Figure 1 shows the location of TA-9. Specifically, the unit is located in Building 43, which was previously used for activities involving the management of explosives. As result, the building is equipped with one wall that is designed to blow out should an explosion occur, and all wiring is designed to be explosion proof. Room 101 of Building 43 will house the reactor unit in which the actual waste treatment will take place. Computer controls and personnel who will monitor treatment activities will be stationed in adjacent Room 105. Waste

awaiting treatment and effluent from treatment will be stored in the north west corner of Room 101. Figure 2 shows the location of Building 43 within TA-9. Figure 3 shows the layout of Building 43 and the location of the hydrothermal processing equipment.

2.4 RD&D Project Description

The purpose of the proposed project is to demonstrate the technical feasibility and performance capability of LANL's hydrothermal processing unit. The treatment technology includes destruction of hazardous organic constituents in heated, pressurized water. The objective of the RD&D permit will be to demonstrate the suitability of the hydrothermal processing for the treatment of wastes containing propellants, explosives, and pyrotechnics (PEP).

The treatment system will use a pilot-scale unit to treat PEP wastes that traditionally have had few treatment options. Current methods for disposing of PEP wastes include open burning or open detonation, both of which result in uncontrolled air emissions. Likewise, controlled incineration carries a liability for air pollution because of large quantities of NO_x compounds that are produced in the conventional combustion of PEPs. Moreover, while incineration can be used to treat PEP contaminated soils and other solids, it is not a satisfactory or economical method for the treatment of PEP contaminated groundwater or other aqueous liquids. A clear need exists for improved PEP waste treatment methods.

In principle, any organic compound (i.e., any compound composed of carbon and other elements such as hydrogen, nitrogen, phosphorus, sulfur, and halogens) can be hydrothermally processed (decomposed in pressurized, heated water) to relatively harmless products (e.g., water, carbon dioxide, nitrogen, nitrous oxide, inorganic salts, and traces of carbon monoxide, nitrite, and nitrate). Because water is the reaction medium, the process can be used for a variety of organic wastes containing water or for water contaminated with organic compounds.

For RD&D experiments using the hydrothermal processing unit, PEP waste will be mixed with oxygen and water, and the solution will be heated and pressurized. Under these conditions, water becomes a dense fluid with transport properties like those of a gas, allowing rapid chemical decomposition of waste constituents. The water in the hydrothermal treatment process is a unique treatment medium in which decomposition of organics can take place at temperatures lower than those required for conventional incineration, thus limiting the production of NO_x and ash typical of incineration. The reaction will be entirely enclosed in a pressure vessel (reactor) with waste concentrations low enough that the heat of reaction will be absorbed by the medium. Hydrothermal processing occurs rapidly, on a time scale of

seconds to minutes, and produces simple waste by-products (i.e., water, carbon dioxide, nitrogen, inorganic salts, carbon monoxide, nitrous oxide, nitrite, and nitrate). Since the solid, liquid, and gaseous effluents are captured and contained, the risk of uncontrolled pollution is minimized. All effluents are collected and may be tested before disposal or release to the environment.

The successful completion of this RD&D project will be one step in the eventual development of a full scale treatment system capable of significantly reducing the volume and hazards of several waste streams generated within the DOE production complex. Initially, only RCRA hazardous wastes will be treated in the hydrothermal processing unit. If the treatment demonstration is successful, it is anticipated that LANL may later request a modification or renewal of the permit to include treatment of mixed wastes.

A great range of scale appears to be possible for hydrothermal processing systems. For the purposes of the RD&D experiments, the treatment unit to be used for studying the destruction of explosives will be a two gallon/hour transportable unit. One of the purposes of the experiments will be to evaluate process and design issues and to develop experience based on operability with actual hazardous waste streams. The unit will be used to evaluate design concepts for a full-scale system, the effectiveness of the treatment process, wear on equipment components, and operation and maintenance requirements. Figure 4 provides a treatment system schematic.

A more detailed discussion of the design and operation of the RD&D unit is provided in Section 4 and Section 5 of this application.

2.5 Comparison to Other Technologies

Compared to other available technologies, hydrothermal processing is applicable to a broader range of waste types. It can be used to treat pure organics, contaminated soils, contaminated water, sludges, and some inorganics. It appears to be economically competitive with other technologies used for aqueous wastes, containing organic matter of between 1 and 20 percent. Since the hydrothermal treatment process is completely contained, emissions can be controlled. The complexity of the technology is comparable to incineration, so that with proper engineering and process controls, qualified technicians will be able to operate and maintain the treatment unit.

Incineration is a non-specific alternate method for destroying organic materials. Incineration can be operated at a relatively low cost, but requires extensive emissions controls. Hydrothermal processing, however, takes place at a much lower temperature (typically 500 °C) than that required for

incineration. Moreover, the system is completely contained. Almost no oxides of nitrogen are expected at these lower temperatures, and the effluent is completely contained and controlled. Hydrothermal processing can be applied to water containing 20 percent or less organic waste. By comparison, incineration is not as cost effective at these concentrations.

Other common methods to dispose of waste or excess explosives are open burning and open detonation. Here wastes are simply ignited or detonated, with few means available to control atmospheric emissions of explosive wastes and their by-products of combustion. Moreover, the fallout of residues and ash from the open burning or open detonation process can impact surrounding soils and surface waters, and over time these residues may impact subsurface soils and groundwater. The EPA, therefore, has long encouraged the development of alternative technologies for the treatment of explosive wastes. Hydrothermal processing offers distinct advantages over open burning and open detonation. The treatment technology offers a high degree of destruction efficiency and all effluent from the treatment process can be captured and sampled for proper subsequent disposal.

3.0 WASTE DESCRIPTION

3.1 Waste to be Treated in the RD&D Unit

The types of wastes that will be tested to determine the effectiveness of the experimental treatment technology are wastes containing propellants, explosives, and pyrotechnics (PEP). Wastes designated for treatment will originate from operations at the LANL facility. No wastes will be brought from off-site for RD&D treatment in the unit. Wastes proposed to be treated in the hydrothermal processing unit are described below.

1. Machining wastewater contaminated with trace levels of PBX 9502, PBX 9501, PBX 9404, TNT, RDX, HMX, and Calcitol (a mixture of 60% TNT and 40% calcium carbonate). This waste stream will be a dilute aqueous waste containing explosive compounds at levels up to the solubility limits of the particular compounds. The maximum possible quantity of each explosive in this waste stream is: PBX 9502, 5.2 parts per million (ppm) by weight; PBX 9501, 5.2 ppm; PBX 9404, 5.2 ppm; TNT, 131 ppm; RDX, 70.4 ppm; HMX, 5.2 ppm; and Calcitol, 131 ppm. Not all these compounds will be present in any single sample. Single samples will typically have a total Chemical Oxygen Demand (COD) below 150 ppm.

2. Wastewater from plastic explosives operations that may contain organic solvents and high explosives mixed with water. The level of explosives will be the additive solubility of the explosives in water (as described

above for waste stream #1) and the solubility of the explosives in the particular organic solvent. Typically, the organic solvent will be one of the following compounds at a concentration of 2-5% by weight: isopropyl alcohol; ethyl acetate, or methyl ethyl ketone.

3. Base hydrolysis aqueous residues containing organic chemical residues up to 10% by weight in water. Waste coolant water containing explosives particulates will be pretreated using base (i.e, sodium hydroxide) hydrolysis by the Fabrication and Assembly Group (WX-3) before RD&D treatment. This base hydrolysis pretreatment converts both the dissolved and particulate explosives to organic chemical residues (primarily formates and acetates) that are no longer considered to be energetic materials and that have enhanced solubility in water.

All high energy (explosive) wastes are initially managed by the Fabrication and Assembly Group (WX-3) at Technical Area 16 (TA-16). Wastewater generated during machining of explosives collects in sumps in manufacturing areas of TA-16. Periodically these sumps are emptied as directed by WX-3. Typically, the wastewater is pressure-driven through sand filters, and the water fraction is then sent to a dedicated explosives wastewater treatment plant located at TA-16. The sand, which filters out any explosives particulates, is then flashed at the open burning grounds to destroy the explosive constituents. The treated sand is then containerized and picked up by LANL's Waste Management Group (EM-7) for subsequent hazardous waste management.

For the RD&D experiments using hydrothermal processing, however, not all the machining wastewater would undergo sand filtration. WX-3 will direct the delivery of a portion of the wastewater pumped from the sumps to Building 43 at TA-9, where the RD&D unit is located. The wastewater may be first pretreated under the direction of WX-3, using base (sodium hydroxide) hydrolysis before RD&D treatment. Analysis and characterization of the waste prior to delivery to the RD&D unit will be the responsibility of the Explosives Technology Group (M-1).

The maximum amount of waste that will be stored at Building 43 awaiting treatment in the hydrothermal processing unit will be 110 gallons (e.g., two 55-gallon containers). Containers of wastes will either be placed in a secondary containment pan, placed in an inflatable berm, or surrounded by absorbent berms to minimize leakage hazards. This ancillary waste storage area is described in further detail in Section 4.3.

3.2 Wastes Generated by RD&D Treatment

Effluents generated from hydrothermal processing will be liquids and gases. These treatment effluents are expected to be primarily water, carbon dioxide, nitrogen, inorganic salts, nitrate, nitrite, and traces of carbon monoxide and nitrous oxide. Gas and liquid effluents are separated at the end of the treatment system, and the separated effluents are discharged directly into 16-gallon cylinders. Samples of the liquid and gas fractions will be collected and analyzed to determine their composition.

Non-hazardous gases contained in the 16-gallon cylinders will be vented to the atmosphere through the Building 43 vent, in accordance with all applicable local, state, and federal air quality control regulations. Atmospheric emissions evaluations and assistance with air permitting for compliance with air quality control regulations are overseen by LANL's Environmental Protection Group (EM-8). Although it is not anticipated that any hazardous gases will be generated during hydrothermal processing, gases containing hazardous constituents will remain containerized and will be picked up by LANL's Waste Management Group (EM-7) or the Fabrication and Assembly Group (WX-3), as appropriate, for proper subsequent management.

A second liquid effluent waste generated as part of hydrothermal processing will be water used to flush the treatment system. Prior to treating wastes, the treatment system will be operated using pure water for approximately one half hour to ensure proper operation of system components. This start-up operation will generate approximately 0.5 gallons of water, which will be captured in a 16-gallon cylinder and treated as waste. After an experiment is completed, the system will continue to operate on pure water for a few minutes to flush any remaining waste residues from the treatment system. Finally, when the system is depressurized, all plumbing will be flushed for approximately one half hour with pure water to rinse out any insoluble salts that may have collected in the reactor. This flush will generate approximately 0.5 gallons of rinse water, which will be captured in a 16-gallon cylinder and treated as waste. Samples of all liquid effluents, including those generated during actual treatment and those produced during system start-up and shut-down flushing, will be analyzed to determine if PEP constituents remain in the effluent. If explosives are detected, the effluent may be reprocessed in the RD&D hydrothermal processing unit. Alternatively, the effluents may be containerized and transferred to EM-7 or WX-3, as appropriate, for proper subsequent disposal.

All liquid effluents generated by hydrothermal processing will be transferred into 55-gallon containers and placed into the RD&D ancillary waste storage area at Building 43 (see Figure 3). A maximum of 220 gallons of effluents (e.g., four 55-gallon containers) may be in the waste storage area at one time. The

ancillary waste storage unit is discussed in further detail in Section 4.3.

As the effluent containers are filled, EM-7 or WX-3, as appropriate, will be contacted to pick up the waste for subsequent storage, treatment, and/or disposal. Facility-wide hazardous waste handling operations are coordinated by EM-7, whose responsibilities include: pick-up of hazardous wastes from LANL generators; characterization of wastes to supplement generator-supplied information (as necessary); proper management of wastes in LANL's RCRA permitted units; and coordination of waste shipment (as necessary) to proper on-site or off-site treatment, storage, recycling, and/or disposal facilities. EM-7 will be provided with all analytical data gathered on the effluents as part of the RD&D experiments. Wastes generated during the RD&D experiments will be characterized and managed by EM-7 personnel in accordance with the approved waste analysis plan in LANL's existing RCRA permit. A waste analysis plan describing general LANL waste characterization procedures is provided as Attachment 1.

3.3 Waste Analysis

It is necessary to have an accurate assessment of the waste stream components, in order to determine the likely decomposition products of the waste undergoing hydrothermal processing and to evaluate the effectiveness of the waste treatment process. As described in Section 3.1 above, LANL's Explosives Technology Group (M-1) will be responsible for analyzing and chemically characterizing the wastewater to be delivered to the hydrothermal processing unit. All laboratory analytical data on the input waste streams will become part of the operating record for the unit.

Treatment effluents generated by the RD&D unit, will be analyzed using several diagnostic instruments listed below, to assess the effectiveness of the treatment process in destroying explosive chemical constituents. Diagnostic equipment and analytical techniques are described in detail in Attachment 2.

- Fourier-Transform Infrared Spectrometer (FTIR);
- Gas Chromatographs (HP Series II, Perkin-Elmer Model 8410, SRI Model 8610, or equivalent) with thermal conductivity and/or Mass Spectrometer (HP 5971 MSD or equivalent) detectors;
- Quadrapole Mass Spectrometer;
- Inductively Coupled Plasma Spectrophotometer (ICP);
- Carbon Analyzer (Rosemount Dohrmann Model DC-190 or equivalent);

- Ion Chromatograph (Dionex 4500i Series or equivalent);
- Ammonia Electrode (Orion Model 95-12 or equivalent);

These diagnostic instruments provide a means for accurate identification and quantification of the effluents resulting from the hydrothermal treatment process. Analysis of treatment effluents is necessary to calculate a mass balance for each experiment. Only the FTIR, gas chromatograph, ion chromotograph, and carbon analyzer will be operated as part of each RD&D experiment. Other diagnostic equipment will be operated intermittently to provide supplemental data on the composition of the effluents.

Three independent analytical laboratories will be used as part of this project. The M-1 analytical laboratory is located at TA-16, Building 460. This facility is particularly well suited for the analysis of aqueous liquids containing explosive compounds. This facility will have the primary responsibility for the analysis of the waste prior to the RD&D treatment. The Geology and Geosciences Group (EES-1) analytical laboratory is located at TA-3, Building 494. This facility is particularly well suited for the chromatographic analysis of liquid and gaseous samples. This facility will have the primary responsibility for the analysis of the liquid and gaseous effluents from the hydrothermal processing unit. The Photochemistry and Photophysics Group (CLS-4) hydrothermal treatment laboratory is located at TA-46, Building 31. This facility is particularly well suited to optical spectral analysis of gaseous effluents. This facility will have the primary responsibility for the FTIR analysis of the gaseous effluent from the RD&D treatment process. Paper copies of the data gathered will become part of the operating record for the unit.

Attachment 2 describes diagnostic equipment performance in further detail.

4.0 PROCESS ENGINEERING

4.1 Description of Treatment Unit

The hydrothermal processing unit that will be used to study the destruction of explosive wastes will be a two gallon per hour transportable waste destruction unit. The basic system uses a supply and mixing subsystem to provide a mixed waste/water/oxygen feed for the reactor and a cool-down and pressure let-down subsystem for postprocessing the reactor effluent. The unit is designed to meet or exceed American Society of Mechanical Engineers (ASME) mechanical standards and will allow all critical operations to be carried out remotely. The system fits on a frame that is roughly 5 feet wide by 12 feet long by 4 feet high. The system can be picked up as a unit and transported on a truck

or trailer. A simple schematic of the RD&D treatment unit is provided as Figure 4. More detailed flow and electrical schematics may be found in the Standard Operating Procedures (SOP) developed for the unit. The SOP also outlines operating procedures. A copy of the SOP is provided as Attachment 3.

4.1.1 Waste Feed System

Aqueous waste to be treated in the unit will be removed from the original container delivered to Building 43 using a pump or tubing (or other suitable methods) and placed in a smaller measuring container. The waste will then be manually poured into the waste feed tank associated with the hydrothermal processing unit. The waste will be introduced into a deionized pressurized water line using a Milton Roy HPLC metering pump (or equivalent). An accurate measure of the quantity of waste treated will be provided by the waste feed metering pump. The system to turn on this metering pump is computer controlled, and a record of pump start-time, the flow rate, and pump stop time are all automatically recorded in the computer databank.

A second tank associated with the treatment system holds pure deionized water, which is pressurized and pumped into a line that connects with the waste feed line. The waste will be injected into the deionized water and passed through a filter to promote mixing. The combined waste/water system includes a remotely controlled two-way switching valve and a separate metering pump capable of pumping up to 2.5 gallons per hour of liquid at up to 5500 psi. The pump is driven by an electric motor and the output flow rate may be varied remotely. The system pressure will be controlled by the pressure let-down valve. The combined waste and water stream will be heated to between 300 to 650 °C (depending on the experimental parameters being tested) before being combined with the water/oxygen stream (described below) and injected into the treatment reactor.

Oxygen, which is required to decompose the organic constituents of the waste during treatment, will be supplied from standard 2000-2400 psi oxygen bottles located on the treatment system rig. The oxygen will be regulated to 1500 psi and will be fed into a Haskel double acting two-stage gas booster, where it will be compressed to an operating pressure of between 3000 to 4000 psi (depending on the experimental parameters being tested). Oxygen from the booster will then be collected in a 2 liter accumulator (reservoir). A high pressure regulator controls the oxygen pressure, and a mass flow meter will be used to measure the oxygen flow rate. Maximum oxygen flow will be about 30 standard liters per minute. Output from the mass flow meter will be used by the remote data acquisition system, which will computer control the oxygen flow via a pneumatically actuated control valve. After passing through a check valve, the oxygen will be injected into a deionized water stream and passed through a filter to promote mixing. The combined water and oxygen stream

will then be heated to between 400 to 650 °C (depending on the experimental parameters being tested) before being combined with the water/waste stream (described above) and injected into the treatment reactor.

4.1.2 Treatment Unit Components

The treatment unit subsystem that will used to feed waste/water/oxygen into the treatment system reactor are described in Section 4.1.1 above. Briefly, this equipment will include fluid supply reservoirs, pumps to bring the fluids to operating pressure at the desired flow rate, and devices for mixing the fluids before they enter the reactor. All lines in the high-pressure, low-temperature portions of the system are constructed of high-pressure 316 stainless steel tubing and fittings.

The duplex metering pump feeding waste/water/oxygen into the reactor contains two pistons, operating 180 degrees out of phase to reduce pulsations. However, there still will be a considerable amount of surge in the output from the pump. This surge will be dampened by two surge piston accumulators. One surge piston will be located on the water line near at the input end of the system, and a second piston will be located on the effluent line just before the pressure let-down valve.
The hydrothermal processing reactor is currently constructed from welded Inconel 625 tubing, having an inner diameter of 0.188 inches and an outer diameter of 0.308 inches. The desired operating temperature of the input feed liquids will be achieved by direct electrical resistance heating of two separate 12 foot long preheaters. Electric power will be provided to each preheater by a separate Hewlett-Packard 6469-C (or equivalent) DC power supplies rated at maximum current of 300 amps at a maximum voltage of 36 volts. The flows from the waste/water and oxygen/water preheaters will be combined and injected into the reactor. Oxidation occurs in the 6-foot long insulated Inconel 625 tube reactor. Both the preheaters and the reactor will be insulated to increase heating efficiency.

After leaving the reactor, the treated effluent stream is cooled using a single-pass counter flow, coaxial-tube heat exchanger. The cooled effluent passes through a single let-down valve, where its pressure is reduced to atmospheric. The let-down valve controls the reactor operating pressure. After the let-down valve, the effluent enters as array of sampling bottles. The entire flow can be diverted to a given bottle for a period of time. The sampling valves are controlled remotely. When the effluent is not being sampled, it passes into a 16 gallon effluent collection cylinder.

External supplies required include 120 volt AC and 220 volt AC electrical power supply, 160 psi compressed air, and approximately 1 gallon/minute cooling water.

4.1.3 Data Collection Equipment

Temperatures will be monitored using at least twenty thermocouples attached to the outside of the preheaters, the reactor, and the heat exchanger to measure surface temperatures. Pressure transducers will be located on the oxygen feed line, the water/waste flow line, and the water/oxygen flow line to measure pressure in the system.

Data acquisition, control, and monitoring will be accomplished with a Hewlett-Packard 3852A data acquisition and control unit and a Macintosh IIfx desktop computer. A digital voltmeter, three 20-channel multiplexers (scanners), a 4-channel digital-to-analog converter (DAC), and a 10-relay actuator will be used for data acquisition and control. The DAC channels will provide continuous computer control of the regulator on the oxygen flow line, the pressure let-down valve, and the two DC power supplies to the preheaters. The scanners will be used to sample the voltages from the pressure transducers, thermocouples, oxygen flow meter, power supplies, and two power supply shunt voltages.

All operating temperatures and pressures will be monitored automatically by the computer every 5 seconds. During a test, all data will be recorded in the computer banks and will be displayed. If needed, the data from a given test can be replayed at a later time.

4.1.4 Diagnostic Equipment

An accurate identification and quantification of the effluent products and reactants resulting from the hydrothermal treatment process is a crucial component of the RD&D effort. Analytical results will be clearly documented in the operating record for the RD&D unit. The hydrothermal processing system effluents will be analyzed using several diagnostic instruments listed below.

- Fourier-Transform Infrared Spectrometer (FTIR);
- Gas Chromatographs (HP Series II, Perkin-Elmer Model 8410, SRI Model 8610, or equivalent) with thermal conductivity and/or Mass Spectrometer (HP 5971 MSD or equivalent) detectors;
- Quadrapole Mass Spectrometer;
- Inductively Coupled Plasma Spectrophotometer (ICP);
- Carbon Analyzer (Rosemount Dohrmann Model DC-190 or equivalent);
- Ion Chromatograph (Dionex 4500i Series or equivalent);
- Ammonia Electrode (Orion Model 95-12 or equivalent);

As discussed in Section 3.1 above, only the FTIR, gas chromatograph, ion chromatograph, and carbon analyzer will be operated as part of each RD&D experiment. Other diagnostic equipment will operate intermittently to provide supplemental data on the composition of the effluents. The location of the diagnostic equipment is detailed in Section 3.3 above. Samples of gas and liquid effluents generated during each RD&D experiment will be collected and transported to the various laboratory locations for analysis. Attachment 2 describes the diagnostic equipment performance in further detail.

4.2 Pollution Control

All RD&D treatment activities will be conducted in compliance with applicable local, state, and federal regulations and orders. Wastes, effluents, and emissions associated with the RD&D project will be handled according to established LANL procedures that are intended to ensure compliance with these regulations.

All liquid and gaseous effluents from hydrothermal processing will be captured and contained. Therefore, the risk of routine, uncontrolled pollution is negligible. All effluents will be collected and will be tested before disposal or release to the environment.

4.3 Ancillary Waste Storage Area

The ancillary RD&D hazardous waste storage area will only be operated for the duration of the RD&D permit, and will not be used to manage wastes other than those specifically associated with the hydrothermal processing unit. The EPA RD&D Guidance Manual specifically allows for the storage of hazardous wastes associated with RD&D activities, without the need to permit the storage area. RD&D guidance allows for storage of up to 15,000 kilograms of hazardous waste intended for experimental purposes.

The ancillary hazardous waste storage area associated with the hydrothermal processing unit will include up to 110 gallons (two 55-gallon containers) of dilute aqueous waste awaiting treatment and up to 220 gallons (four 55-gallon containers) of dilute aqueous effluent generated from treatment. The total capacity, therefore, of the ancillary waste storage area will be 330 gallons. 2,452 #

The waste containers will be placed in secondary containment (e.g., pan, inflatable berm) or surrounded by absorbent berming in the northwest corner of Room 101 of Building 43. The floors and walls of the building are constructed of concrete. If used, the secondary containment pan or inflatable berm will be sized to accommodate ten percent of the total waste volume stored in the ancillary unit and the entire contents of the largest container that may be managed in the unit (in this case, 55 gallons). Alternatively, the containers will be surrounded by absorbent

berms. Figure 3 shows the location of the ancillary RD&D hazardous waste storage unit.

4.4 Operating Parameters

The effectiveness of hydrothermal processing as an explosive waste treatment technology can be determined through a variety of combinations of operating parameters and controls. The major operating parameters that can be controlled and varied during the operation of the unit are:

- Temperature;
- Waste and Oxidizer flow rate;
- Pressure in reactor; and
- Concentration of waste.

The application of these control parameters is further explained in the following Section 5.2.

5.0 RESEARCH PLAN

LANL has identified a need to explore alternative technologies for the treatment of explosive wastes. Hydrothermal processing will involve use of a pilot-scale unit to demonstrate the technical feasibility and performance capability of a new technology for the treatment of explosive wastes. It is believed that full-scale development of this system would provide distinct improvements over currently available treatment technologies, such as open burning/open detonation and incineration, in terms of both destruction efficiency and control of atmospheric emissions that may affect human health and the environment.

This section describes the parameters to be varied and monitored, general methods of sampling and analysis, and inspection procedures to be conducted under the RD&D permit.

5.1 Objective

The objective of the RD&D permit will be to demonstrate the suitability of hydrothermal processing for the treatment of propellants, explosives, and pyrotechnics (PEPs) in an actual hazardous waste stream. The waste treatment studies will:

- Demonstrate the efficiency of destruction of chemical constituents in the waste;
- Identify and quantify the products of destruction in the effluent; and
- Demonstrate that the process can be conducted safely.

5.2 Research to Date

A wide variety of compounds have been successfully treated using hydrothermal processing. These include simple hydrocarbons and oxygenates, chlorinated organics and aromatics, nitro-organic compounds, pharmaceuticals and biopharmaceuticals, soil containing dioxin, fermentation wastes, as well as municipal and industrial sludges. Table 1 lists a number of compounds for which destruction efficiencies have been measured. Table 2 lists the inorganic compounds that have successfully undergone hydrothermal processing. Table 3 lists a number of complex wastes that have been treated by the technology.

A summary of research findings from hydrothermal processing experiments using (non-waste) high energy materials is provided in Attachment 4.

5.3 Operating Parameters and Monitoring Frequency

The hazardous waste streams to be tested under this RD&D permit are identified in Section 3.1. Under the RD&D permit, optimization of operating parameters will be refined and possible limitations for treating the selected wastes will be determined.

The RD&D permit will be conducted using the following operating parameters.

Operating Parameter	Experimental Range
Temperature	400 to 600 °C (safe to 700 °C)
Waste and Oxidizer Flow Rate	0.5 to 1.5 gallons per hour
Pressure in Reactor	3000 to 4000 psi (safe to 5000 psi)
Concentration of waste	less than 1 part waste per 1000 parts water by volume

Mass balance calculations will be performed for each experiment to determine the final outcome of the hazardous waste constituents.

5.4 Monitoring Plan

Monitoring equipment includes systems for process control and effluent and emission analysis that enable the operator of the hydrothermal processing unit to take those measurements necessary to demonstrate that the unit is operating in a controlled and safe manner, is not presenting a hazard to human health and the environment, and is in compliance with permit conditions.

The hydrothermal processing unit is described in Section 4 and shown in Figures 3 and 4. The monitoring system includes process monitoring and effluent monitoring.

5.4.1. Process Monitoring

Temperatures in the system will be monitored using at least twenty thermocouples attached to the outside of the preheaters, the reactor, and the heat exchanger to measure surface temperatures. Pressure transducers will be located on the oxygen feed line, the water/waste flow line, and the water/oxygen flow line to measure pressure in the system. All operating temperatures and pressures will be monitored automatically by the system computer every 5 seconds.

Data acquisition, control, and monitoring will be accomplished with a Hewlett-Packard 3852A data acquisition and control unit and a Macintosh IIfx desktop computer. Continuous remote computer control of the regulator on the oxygen flow line, the pressure let-down valve, and the two DC power supplies to the preheaters will be maintained for the duration of each experiment.

If the computer-monitored temperature in various portions of the treatment system or the gas pressure exceeds 5000 psi or 700 °C, or if the effluent stream temperature at the outlet of the heat exchanger exceeds 110 °C, the system is designed to automatically shut down. Equipment shut down is discussed in detail in Section 5.4.3 below.

5.4.2. Effluent Monitoring

As stated in Section 3, wastes generated during hydrothermal processing are expected to be primarily water, carbon dioxide, nitrogen, nitrous oxide, nitrite, nitrate, carbon monoxide. Monitoring of effluents will parallel the accumulation of operating parameter and process data, in order to evaluate the effectiveness of hydrothermal processing as a waste treatment technology.

Liquid and gas effluents will be separated at the final stages of the treatment process and will be discharged directly into 16-gallon cylinders. At the end of each experimental run, liquid and gas effluent samples will be collected from the cylinders for analysis.

As discussed in Sections 3.1 and 4.1.4 above, only the Fourier-Transform Infrared Spectrometer, Gas Chromatograph, Ion Chromatograph, and Carbon Analyzer will be operated as part of each RD&D experiment. Other diagnostic equipment (i.e., Quadrapole Mass Spectrometer, Inductively Couples Plasma Spectrophotometer, and Ammonia Electrode) will be operated intermittently to provide supplemental data on the composition of

the effluents. Location of the diagnostic laboratories is discussed in Section 3.1 above. Samples of gas and liquid effluents generated during each RD&D experiment will be collected and transported to the laboratories for analysis. The effluent analyses will be performed by trained, experienced personnel, and copies of the analytical data will become part of the operating record for the unit. Attachment 2 describes the diagnostic equipment performance in further detail.

5.4.3 Equipment Shut Down

Any upset condition that affects the unit's ability to perform within permit requirements or that poses a threat to human health or the environment will be cause for shut down of the unit. The hydrothermal treatment process is computer controlled in a separate room from where the treatment system components are located. When temperatures or pressures exceed preset limits, the computer is programmed to automatically shut down the system. Trigger points for emergency shut down are reactor temperatures in excess of 700 °C, pressures in excess of 5000 psi, or heat exchanger outlet temperatures in excess of 110 °C.

Equipment shut down will include immediate shut-off of the preheaters and reactor heaters, shut-off of the oxygen supply valve, shut off of the oxygen to water line valve, and venting of the oxygen system to a vent line leading to the exterior of the building. Waste feed will be disengaged and replaced with pure water flow to purge the system. Manual shut down can also be initiated remotely by the unit operator at any time. An operator will always be present during operation of the system.

Both start up and shut down procedures are described in further detail in the SOP in Attachment 3.

5.5 Inspection Procedures

Routine inspections of the hydrothermal processing treatment unit equipment components are conducted to identify equipment malfunction, deterioration, and operator errors that might lead to a release of hazardous waste to the environment and pose a threat to human health and the environment. Additionally, the ancillary hazardous waste storage area will be inspected to ensure that no releases to the environment have occurred or may potentially occur. Inspections will be conducted every day that the treatment system is operated, to identify problems promptly and allow for timely repair and cleanup. Research operators of the hydrothermal processing unit will be responsible for conducting inspections, and originals of the inspection records will be kept in an inspection logbook by the RD&D research group. Inspection records will be retained for a minimum of three years from the date of inspection. Copies of the inspection records will be submitted to the Environmental Protection (EM-8) group,

Hazardous and Solid Waste Section, at the end of each work week.

An example of the Inspection Record Form (IRF) used at LANL and instructions for its use are provided as Attachment 5. The IRF is a comprehensive form that applies to all categories of both hazardous and mixed waste units; thus, not all sections of the IRF apply to all units. Items that do not apply at the RD&D unit will be marked as not applicable.

If an inspection indicates that corrective action measures are warranted, any and all actions taken, along with time, date, and other pertinent information, will be recorded on the inspection form and all subsequent inspection forms until corrective measures are completed. If a condition is found in which a release to the environment is imminent or has already occurred, the condition will be assessed by the RD&D supervisor or a designated representative. If this assessment indicates that an emergency situation exists and that human health or the environment may be adversely affected, the Contingency Plan, provided as Attachment 6, will be implemented.

Additionally, equipment and operation procedures are described in the current SOP developed for the unit. A copy of the SOP is provided as Attachment 3. As part of routine procedures for each experimental run, the system is operated for approximately one half hour using only pure water as the feed. During this initial operation period, proper functioning of the unit is confirmed prior to introducing waste into the treatment system. Problems related to equipment or operational malfunction, deterioration, or operator error will be recorded in the logbook that will be maintained throughout the RD&D project. Details of the corrective action measures taken in response to these errors will also be recorded in the project logbook.

6.0 QUALITY ASSURANCE/QUALITY CONTROL

6.1 Calibration Procedures

It is essential that equipment used during hydrothermal processing be periodically calibrated to ensure proper operation of the unit and to ensure protection of human health and the environment.

Flow meters and thermocouples will be factory calibrated and will not be adjusted for the duration of the RD&D experiments. Pumps and pressure transducers are routinely calibrated in-house by LANL's Engineering Design and Quality Assurance Group (MEE-9). The calibration procedures and test results will be documented in the lab notebooks. Pump and pressure transducers will be re-calibrated if any maintenance or repair has been performed.

Diagnostic equipment will be calibrated by LANL researchers using representative chemical standards of known concentrations, as described in Attachment 2.

7.0 DATA AND RECORDKEEPING

During each RD&D treatment event, all data monitored by the computer (temperature, pressure) will be recorded in the computer banks and will be displayed. The computer records operating conditions including temperatures, pressures, length of experimental run, times when wastes were added to the system. If needed, the data from a given test can be retrieved from the computer files at a later time.

A written logbook will also be maintained for the unit and will contain experimental system operation that will not be automatically recorded by the computer, including: intent of experiment, problems, observations, etc. Analytical data on the wastes and effluents will also be maintained for each experimental run.

Reports summarizing the findings of the RD&D project will be prepared on a semi-annual basis. Copies of the semi-annual reports will be submitted to the New Mexico Environment Department.

8.0 SAFETY PLAN

The Safety Plan implemented for the RD&D unit will complement those procedures approved in LANL's current RCRA Contingency Plan contained in the facility's RCRA permit authorized November 1989 and those procedures specified in the "RCRA Interim Status Contingency Plan for Mixed Waste Units" prepared May 1992.

A modified Contingency Plan, which addresses general emergency procedures applicable to the RD&D unit, has been included with this application as Attachment 6.

An analysis of hazards related to the hydrothermal processing unit has been performed. Administrative control measures include personnel training and development of and adherence to standard operating procedures. Engineering control measures include remote control of the treatment system reactor, automatic computer monitoring and shut-down capability, and special building construction to mitigate explosion impacts.

The RD&D unit will be located in Building 43 at TA-9. Building 43 will be dedicated to hydrothermal processing and its necessary support and monitoring activities. No other activities will be carried out in this building. Building 43 is equipped with the following safety features:

- Fire extinguishers;
- Passive ventilation system;
- Blow out walls on one outer face of Room 101, where the treatment reactor will be located, for protection against explosions;
- Wall between treatment reactor and control room, where personnel will be stationed, is constructed of reinforced concrete; and
- Spill kit to manage spills of dilute aqueous wastes stored in the ancillary waste storage area in Room 101.

The hydrothermal processing system will be operated with the following safety features:

- The hydrothermal treatment process is remotely computer controlled.
- Personnel will not be allowed in the room housing the treatment reactor while it is in operation and pressures exceed 3000 psi.
- Temperatures will be monitored using at least twenty thermocouples attached to the outside of the preheaters, the reactor, and the heat exchanger to measure surface temperatures. Pressure transducers will be located on the oxygen feed line, the water/waste flow line, and the water/oxygen flow line to measure pressure in the system.
- All operating temperatures and pressures will be monitored automatically by the computer every 5 seconds.
- The system is designed with a pressure relief valve to prevent pressurization of the equipment above the rated value of the system.
- When temperatures or pressures exceed preset limits, the computer is programmed to automatically shut down the system. Trigger points for emergency shut down are reactor temperatures in excess of 700 °C, pressures in excess of 5000 psi, or heat exchanger outlet temperatures in excess of 110 °C.
- Treatment apparatus will be started using pure water only to verify sound operation, prior to injecting the waste stream into the system.

- All wastes to be treated in the hydrothermal processing unit and all effluents generated by the treatment process are dilute aqueous wastes. None of the explosive constituents in the waste present an explosive hazard.

- Containers of hazardous wastes will be kept closed and stored in a secondary containment or surrounded by absorbent berms to minimize leakage hazards.

A summary of potential hazards and mitigating measures is provided below.

- **FIRE HAZARDS**

  Hazard Description: Two separate 12-foot long preheaters and one 6-foot long reactor are heated by direct electrical resistance heaters. Electric equipment also can be a fire hazard.

  Potential Effects: Personnel injury due to burns; equipment damage.

  Safety Measures: System operated from a remote location, avoiding personnel and equipment contact with heated portions of the system. Insulation is provided on exposed hot plumbing. Computer controlled system will shut down unit when excessive temperatures are detected. Building is equipped with a fire alarm system, sprinkler system, and fire extinguishers. All operating personnel are properly trained to recognize hazards and respond to emergencies.

- **ELECTRICAL HAZARDS**

  Hazard Description: Power supplies, heaters, computer equipment use 120/220 volt service. Electric power will be provided to each preheater by a separate power supplies.

  Potential Effects: Personnel injury from electrical shock; equipment damage; fire.

  Safety Measures: System operated from a remote location, avoiding personnel contact with electrical power components of treatment reactor. Computer controlled system will shut down unit when excessive temperatures are detected. Electrical equipment will be properly grounded. No personnel working on electrical equipment will work alone or out of sight of a backup person. All operating personnel are properly trained to recognize hazards and respond to

emergencies. The RD&D research team will maintain drawings and communicate any changes to all team members so that all personnel are aware of the status of all electrical equipment and any modifications.

- **CHEMICAL HAZARDS**

  Hazard Description: Dilute aqueous organic wastes are treated in unit. No other chemicals are used to operate or maintain the RD&D unit.

  Potential Effects: Possible health effects from personnel contact with wastes.

  Safety Measures: System operated from a remote location, avoiding personnel and equipment contact with wastes and effluents during actual operation of the treatment system. All effluents will be captured and contained. Wastes containers in the RD&D ancillary storage area will be placed in a secondary containment or surrounded by absorbent berms to minimize leakage hazards. All containers will be kept closed except when adding or removing wastes. Wastes will be removed from the ancillary storage area by LANL's Waste Management Group (EM-7) in accordance with procedures outlined in the existing RCRA permit for the facility. A spill control kit appropriate for the waste type and volume will be stationed in the same room as the ancillary waste storage area. All operating personnel are properly trained to recognize hazards and respond to emergencies.

- **MECHANICAL HAZARDS**

  Hazard Description: Routine mechanical assembly and lifting operations are carried out at the RD&D unit. Accidents involving tools, fixtures, and lifting devices have the potential to cause personnel injury or equipment damage.

  Potential Effects: Personnel injury; equipment damage.

  Safety Measures: Only approved lifts and hoists will be used. Personnel will exercise caution in the use of hand and power tools. Tripping and slipping hazards will be mitigated by proper storage of equipment and housekeeping.

- **EXPLOSION HAZARDS**

  Hazard Description: Wastes to be treated in the RD&D unit are contaminated with dilute concentrations of propellants, explosives, and pyrotechnics; pressures up to 5000 psi will be generated in the treatment reactor; compressed oxygen in bottles with pressures up to 2400 psi are normally used at the unit.

  Potential Effects: Personnel injury; equipment damage.

  Safety Measures: System is operated from a remote location, removing personnel and computer equipment from vicinity of pressurized treatment components and piping. Computer controlled system will shut down unit when excessive temperatures and pressures are detected. Unit operators also monitor temperature and pressure in order to prevent explosions from occurring. The reactor tube has been tested at 700 °C and 15,000 psi with no deformation. These conditions are will above normal operating parameters. One outer wall of Room 101 is designed as a blow out wall. In the event that an explosion in the system occurs, the released pressure should blow out this outer wall. The wall between personnel and computer controls and the treatment reactor is constructed of reinforced concrete. All electrical wiring in Building 43 is explosion-proof. Personnel will receive training in the use of compressed gases and associated regulators, valves, gauges, and plumbing. Proper regulators will be used on gas cylinders.

9.0 PERSONNEL QUALIFICATIONS AND TRAINING

Dr. Steve Buelow will lead the RD&D program for the hydrothermal processing unit. He is principal investigator for this project and has overall responsibility for technical and program leadership, guidance, and interfacing. Key personnel authorized to operate the hydrothermal processing system and their duties are described below. Other qualified and suitably trained personnel may also be authorized to perform the RD&D experiments.

Name	Responsibility
Ray Flesner (M-1)	Lead Operator
Larry Sprouse (M-1)	Technician/Operator
Carl Vecere (M-1)	Technician/Operator
John Sanchez (M-1)	Explosives Group Supervisor

Bob McFarland (MEE-9)	Design Engineer, Mechanical Problem Troubleshooting, Conduct Unit-Specific Training
Ray Brewer (MEE-9)	Construction Technician, Mechanical Problem Troubleshooting

LANL's personnel training program conforming to RCRA requirements is managed by the Risk Management Support Group (HS-3) of the Health and Safety (HS) Division. Records of formal training for each person who manages hazardous waste is maintained in the HS-3 training office. All hydrothermal processing operations personnel will receive the following training, as appropriate. Summaries of the training courses are provided in Attachment 7.

- General Employee Training (GET) for new LANL employees;
- Introduction to Hazard Communication;
- OSHA Hazardous Waste Operations (29 CFR 1910.120) and Refresher Course (as necessary);
- Waste Generator Training;
- Electrical Safety Awareness Training;
- Pressure Safety: Compressed Gas Systems;
- Contingency Plan/Spill Prevention, Control and Countermeasure (SPCC) Plan; and
- Unit-specific operations training for hydrothermal processing unit (labelled as Waste Destruction Unit WDU in training course summary).

Division and group leaders and immediate supervisors are responsible for ensuring that education and training in site-specific emergency response procedures and in LANL's emergency response program are also provided. Periodic unannounced emergency drills and exercises may be used to familiarize employees with emergency procedures.

Authorized personnel receive unit-specific training in Standard Operating Procedures (SOP). A copy of the current SOP is provided as Attachment 3. The SOP is reviewed at least annually and updated when necessary. Review and revision of SOPs is directed by LANL's Safety and Risk Assessment Group (HS-3).

The safety training records of new staff are reviewed upon assignment to the research unit. Additional training is designated as necessary. Individual training records of operations personnel are reviewed annually by the team leader.

All new LANL employees receive appropriate training within six months of their date of hire or transfer. Personnel do not work in unsupervised positions until they successfully complete the appropriate levels of training for their position and responsibilities.

10.0 CLOSURE PLAN

10.1 Closure Performance Standard

This closure plan is designed to ensure that the RD&D unit will be closed in a manner that will not require further maintenance and that controls, minimizes, or eliminates, the post-closure escape of hazardous waste and hazardous constituents to the environment. At the time of closure, all waste and decontamination residues will be removed and disposed of at an appropriate storage, treatment, or disposal facility. Decontaminated equipment may be salvaged for other uses at the LANL facility. No post-closure care will be required, as no disposal of hazardous wastes or hazardous constituents will occur.

At closure all hazardous wastes and hazardous constituents of wastes managed in the hydrothermal processing unit will be removed. Verification sampling will be performed to demonstrate that decontamination has been effective.

10.2 Maximum Waste Inventory

The maximum inventory of wastes that may be stored at in the RD&D ancillary storage area at any one time will be 330 gallons. This maximum capacity may include up to 110 gallons of wastes that require treatment in the hydrothermal processing unit and up to 220 gallons of effluent generated by the treatment unit. At closure, the entire inventory of hazardous waste associated with the hydrothermal processing unit will be removed. Untreated wastes inventory will be hydrothermally processed before being removed from Building 43 by EM-7. Alternatively, the untreated inventory will be picked up by WX-3 for proper management. Section 3.1 briefly describes the current management procedures for the untreated wastewater inventory.

EM-7 will be contacted to dispose of the effluent inventory present in Building 43. EM-7 will coordinate the pick-up of treatment effluents; characterize the wastes (as necessary); ensure proper subsequent management of wastes; and coordinate shipment of the wastes to an appropriate treatment, storage, and disposal facilities.

10.3 Procedures to Close the Unit

All RCRA hazardous waste inventory present at the unit at the time of closure will be transported by qualified LANL personnel for subsequent storage, treatment, and/or disposal as described in Section 10.2.

Decontamination of the experimental unit will be accomplished by trained RD&D unit operations personnel, Waste Management Group (EM-7) decontamination personnel, and/or qualified subcontractors. Decontamination personnel will wear appropriate personal protective equipment (e.g., safety glasses, gloves, boots, coveralls/aprons).

All equipment associated with the hydrothermal processing unit that has come in direct contact with hazardous waste will be decontaminated and either reused or disposed. Decontamination will be accomplished by flushing distilled water through the apparatus followed by verification sampling.

The hydrothermal processing unit operating records will be reviewed to determine if spills or leaks of wastes occurred during operation of the unit. Since the concentration of hazardous constituents is dilute both in the wastes to be treated and the effluent generated by the treatment process, hazards to human health and the environment are minimized. If spills or leaks occurred, then the floor in and around the areas where the release occurred will be decontaminated using water washing, steam-cleaning, detergent washing, or other suitable methods. Verification sampling of the final rinse water will be performed to demonstrate decontamination.

All rinsate from equipment decontamination (and, if necessary, floor decontamination) will be contained, sampled, and transported from Building 43 by EM-7. Sampling and regulatory support for decontamination activities will be provided by the Environmental Protection Group (EM-8).

Decontamination of equipment and floors (if necessary) will be demonstrated by testing samples of the decontamination rinsate for explosive compounds, as outlined in Attachment 2. Successful decontamination will be defined as:

- No explosive constituents of the input waste streams detected in the rinsate.

If sampling indicates that decontamination has not been successful, then water flushing, steam-cleaning, detergent washing, or other suitable methods will be repeated until sampling indicates that decontamination is complete.

An alternative demonstration of decontamination may be proposed and justified at the time of closure as circumstances indicate.

If the proposed alternative is judged to be acceptable under standards and guidance in effect, then the alternative will be incorporated into the closure plan by permit modification.

10.4 Date and Schedule for Closure

LANL will notify the New Mexico Health and Environment Department in writing 45 days prior to the date of anticipated closure. Within 90 days of accepting the final volume of hazardous wastes for treatment in the RD&D unit, the entire inventory of hazardous waste will be removed from the unit for proper treatment and disposal. Within 180 days of accepting the final volume of hazardous wastes, all closure activities will be completed. The proposed schedule for the unit is as follows:

Activity	Days
Final receipt of waste for treatment	0
Treatment and/or removal of waste inventory	0-90
Equipment decontamination	90-120
Floor decontamination (if necessary)	90-120
Sampling and analysis to verify decontamination	90-120
Appropriate storage, treatment, and/or disposal of decontamination residues	60-120
Closure Certification	180

Upon completion of closure, an independent registered professional engineer and the DOE shall prepare a letter certifying that the RD&D unit was closed in accordance with the approved closure plan.

11.0 DURATION OF PERMIT

LANL requests that the RD&D permit be issued for a one year period. It is anticipated that a one year time frame will be necessary to collect sufficient data to adequately test the technical feasibility and performance capabilities of the hydrothermal processing unit.

Additionally, due to logistics involved in coordinating start-up of the RD&D unit, LANL requests some flexibility in determining when the official start date of the permit will begin. LANL wishes to negotiate with the New Mexico Environmental Department

TABLE 1

CHEMICAL TREATED BY HYDROTHERMAL PROCESSING AND TYPICAL DESTRUCTION EFFICIENCIES

CHEMICAL NAME	DESTRUCTION EFFICIENCY, %
Ammonia	>99.71
Ammonium Perchlorate	>99.9
Arochlors (PCBs)	>99.995
Biphenyl	99.97
Carbon Tetrachloride	>96.53
Chlorinated Dibenzo-*p*-dioxins	>99.9999
Chloroform	>98.83
2-Chlorophenol	>99.997
o-Chlorotoluene	>99.998
Cyclohexane	99.97
DDT	99.997
Dextrose	99.6
4,4′-Dichlorobiphenyl	99.993
1,2-Dichloroethylene	99.99
2,4-Dinitrotoluene	99.9998
Ethylene Glycol	>99.9998
Fluorescein	>99.9992
Hexachlorocyclohexane	>99.9993
Hexachlorocylcopentadiene	99.99
HMX	>99.9
Methyl Ethyl Ketone	99.993
Nitrobenzene	>99.998
Nitroguanidine	>99.9
Nitromethane	>99.9
PETN	>99.9
RDX	>99.9
Tetrachloroethylene	99.99
TNT	>99.9
Trichlorobenzenes	99.99
1,1,1-Trichloroethane	>99.99997
1,1,2-Trichloroethane	>99.981
o-Xylene	99.93

TABLE 2

INORGANIC COMPOUNDS PROCESSED THROUGH HYDROTHERMAL PROCESSING REACTOR

Alumnia	Magnesium Phophate
Ammonium Chloride	Magnesium Sulfate
Ammonium Sulfate	Mercuric Chloride
Boric Acid	Potassium Bicarbonate
Bromides	Potassium Carbonate
Calcium Carbonate	Potassium Chloride
Calcium Chloride	Potassium Sulfate
Calcium Oxide	Silica
Calcium Phosphate	Sodium Carbonate
Calcium Sulfate	Sodium Chloride
Fluorides	Sodium Hydroxide
Heavy Metal Oxides	Sodium Nitrate
Hydrochloric Acid	Sodium Nitrite
Iron	Sodium Sulfate
Iron Oxide	Soil
Lithium Sulfate	Sulfur, Elemental
Magnesium Oxide	Titanium Dioxide

TABLE 3

COMPLEX WASTES TREATED BY HYDROTHERMAL PROCESSING

Adumbran
Bacillus Stearothermophilus
(Heat-Resistant Spores)
Bran Cereal
Carbohydrates
Casein
Cellulosics
Coal
Coal Waste
Corn Starch
Diesel Fuel
E. Coli
Endotoxin (Pyrogen)
Human Waste
Ion Exchange Resins
(Styrene-Divinyl enzene)
Malaria Antigen
Olive Oil
Paper
Protein
Sewage Sludge
Soybean Plants
Sulfolobus Acidocaldarius
Surfactants
Transformer Oil
Yeast

FIGURE 1

Site Map

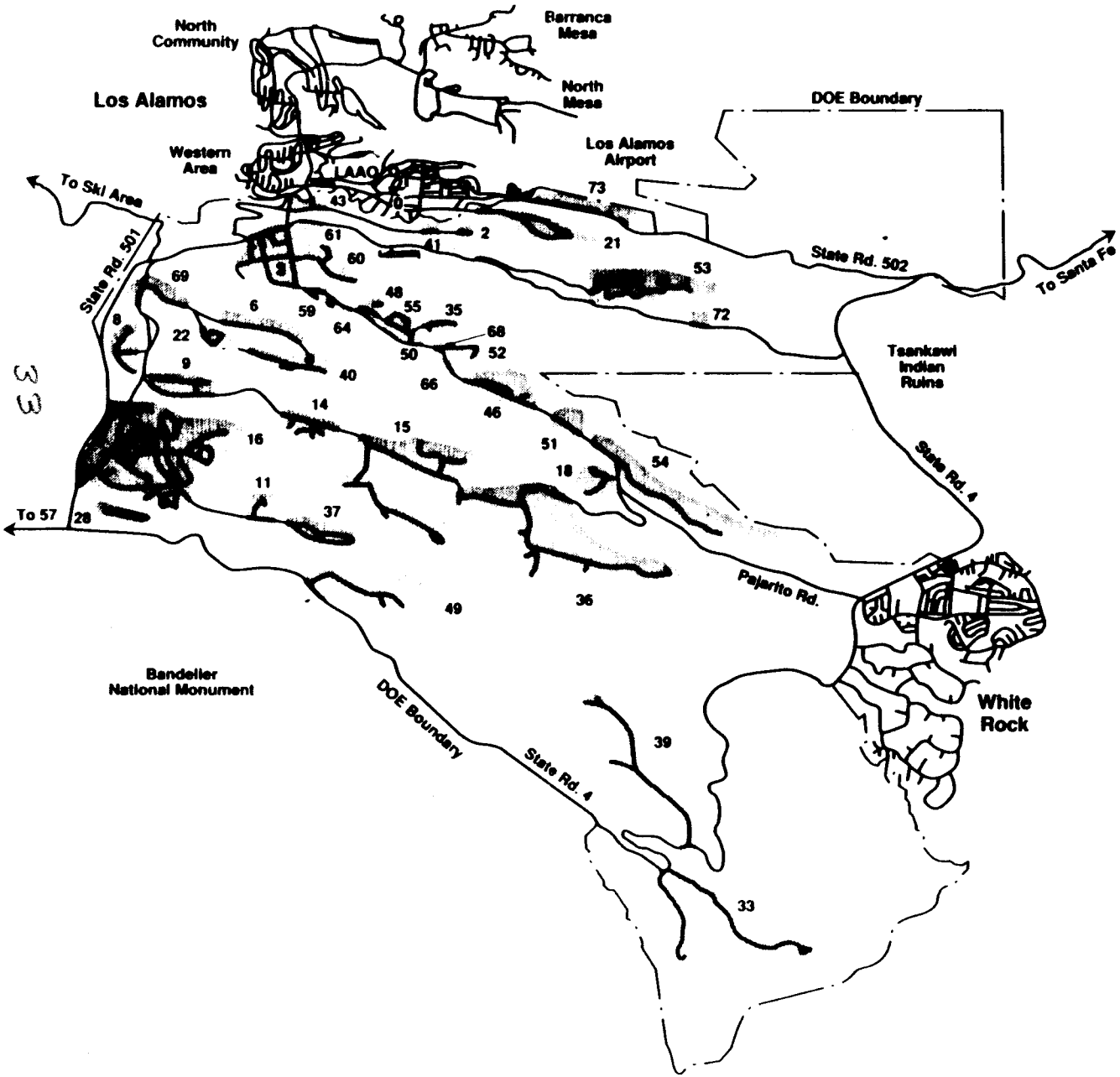

Los Alamos

NATIONAL LABORATORY

Technical Area Locations

TA-0	Unassigned Land Reserve
TA-2	Omega Site
TA-3	South Mesa Site
TA-6	Two Mile Mesa Site
TA-8	Anchor Site West
TA-9	Anchor Site East
TA-11	K-Site
TA-14	Q-Site
TA-15	R-Site
TA-16	S-Site
TA-18	Pajarito Laboratory
TA-21	DP-Site
TA-22	TD-Site
TA-28	Magazine Area A
TA-33	HP-Site
TA-35	Ten Site
TA-36	Kappa Site
TA-37	Magazine Area C
TA-39	Ancho Canyon Site
TA-40	DF-Site
TA-41	W-Site
TA-43	Health Research Lab & DOE Headquarters
TA-46	WA-Site
TA-48	Radiochemistry Site
TA-49	Frijoles Mesa Site
TA-50	Waste Management Site
TA-51	Radiation Exposure Facility
TA-52	Reactor Development Site
TA-53	Meson Physics Facility
TA-54	Waste Disposal Site
TA-55	Plutonium Facility Site
TA-57	Fenton Hill Site
TA-59	OH-Site
TA-73	Airport

TA-60,61,64,66,68,72
(unnamed TAs)

FIGURE 2

LOCATION OF BUILDING 43 AT TECHNICAL AREA 9

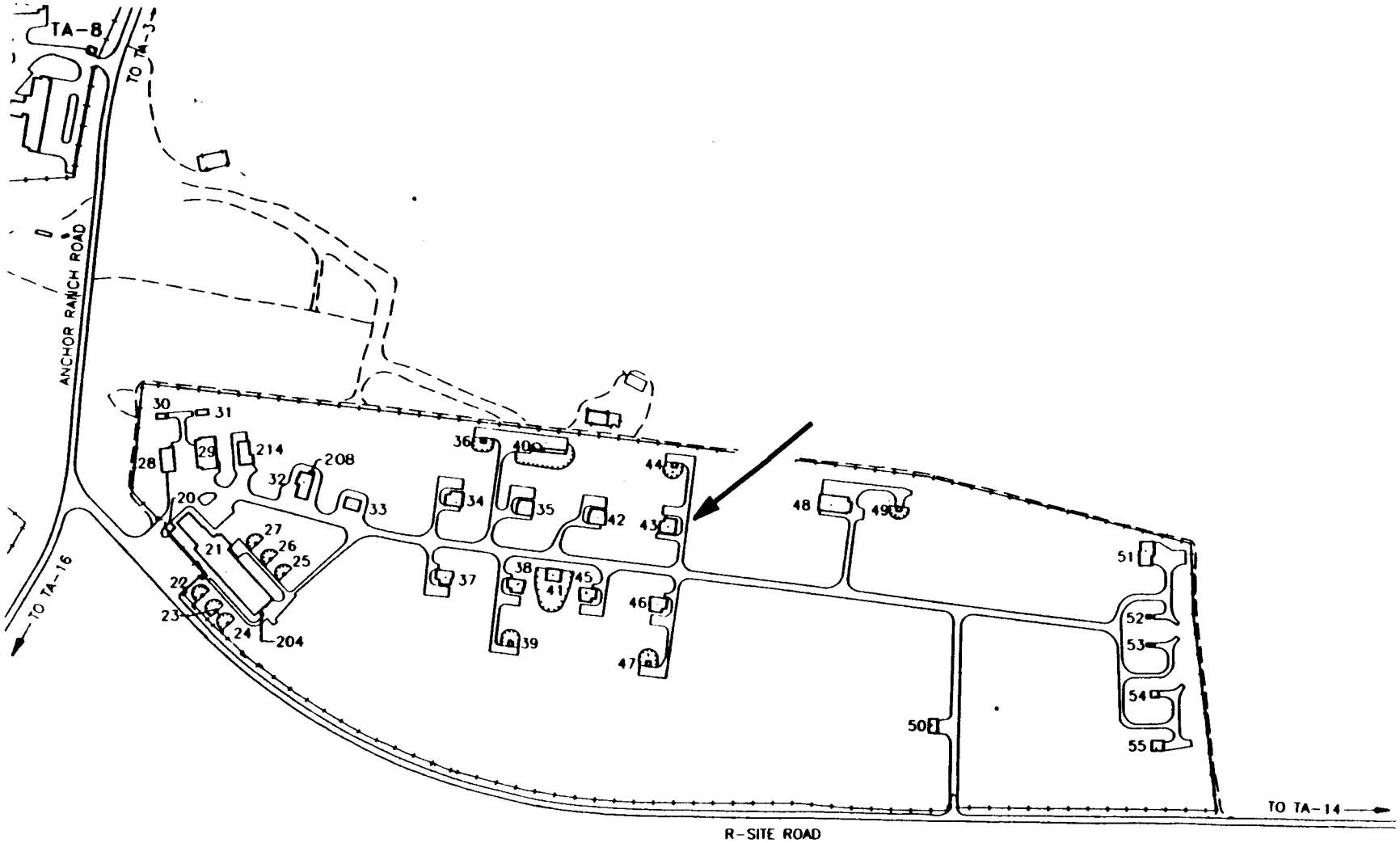

FIGURE 3:
LAYOUT OF HYDROTHERMAL PROCESSING UNIT

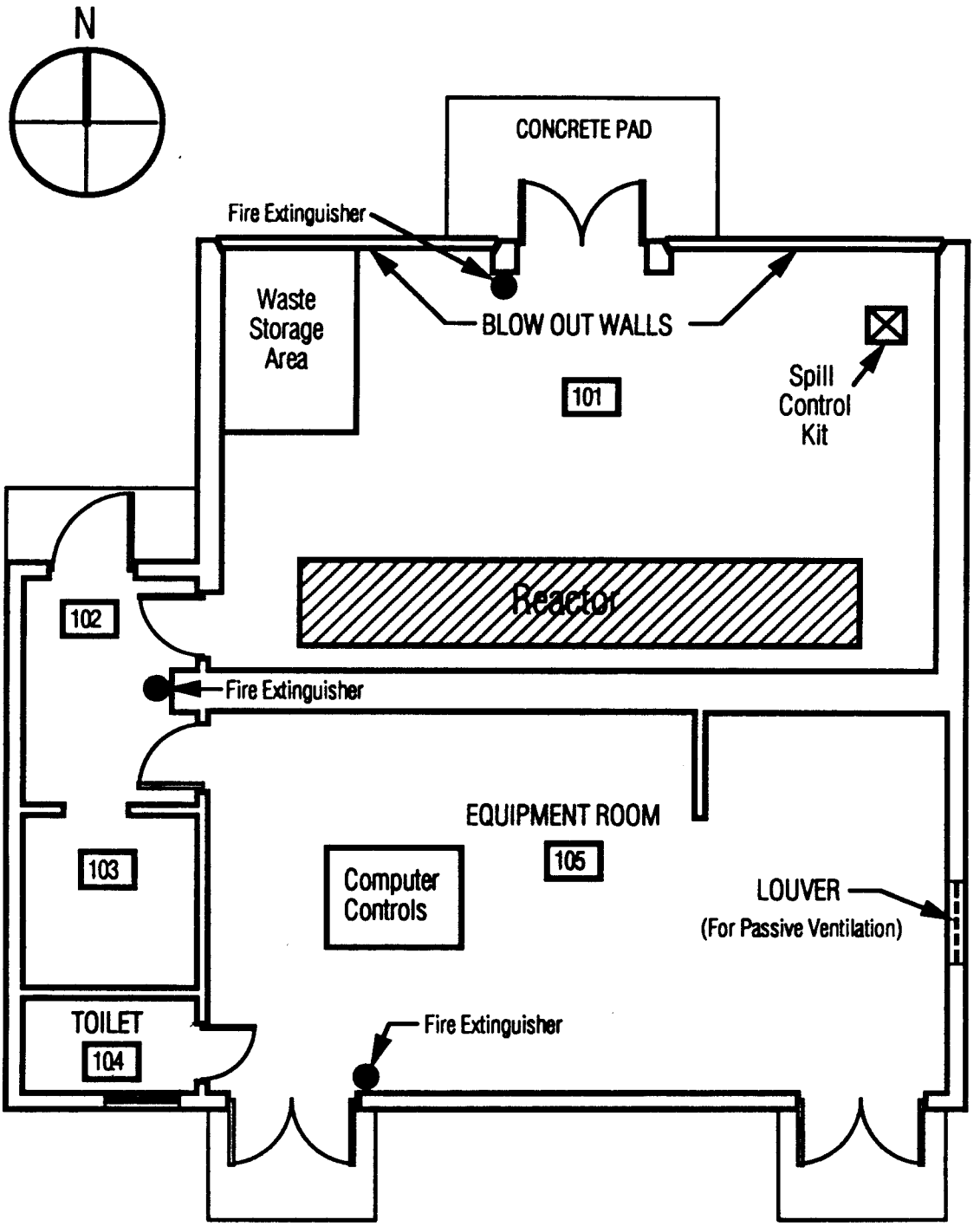

NOT TO SCALE

ATK19/2283/F2 jca

FIGURE 4

SCHEMATIC OF TREATMENT PROCESS

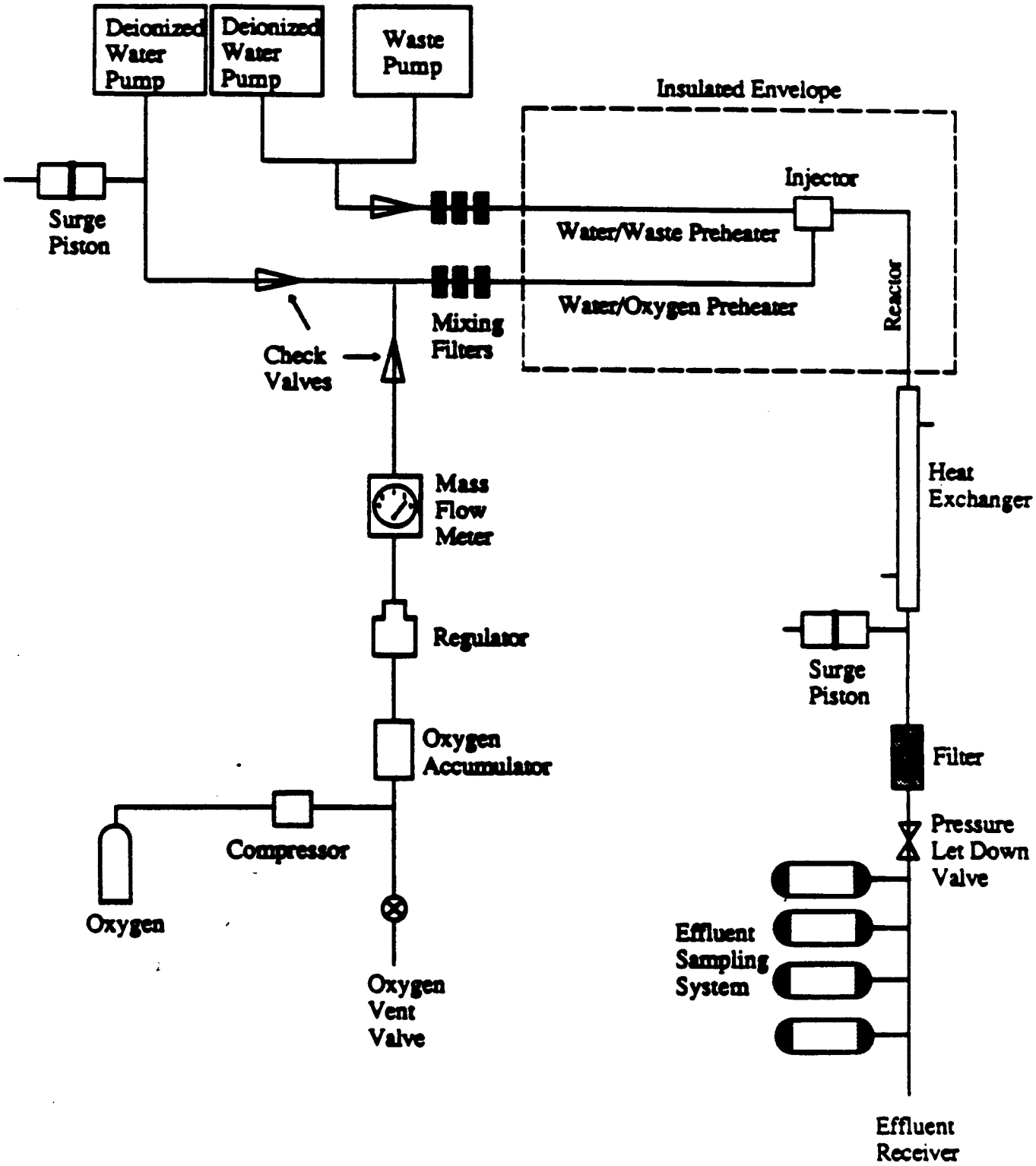

ATTACHMENT 1

WASTE ANALYSIS PLAN - GENERAL LANL PROCEDURES

Los Alamos National Laboratory

HYDROTHERMAL PROCESSING
RD&D PERMIT

ATTACHMENT 1

WASTE ANALYSIS PLAN

HYDROTHERMAL PROCESSING UNIT

RD&D PERMIT

Los Alamos National Laboratory
Environmental Protection Group
Los Alamos, NM 87545

March 1993

ATTACHMENT 1

WASTE ANALYSIS PLAN

HYDROTHERMAL PROCESSING UNIT
RD&D PERMIT

1.0 WASTE ANALYSIS

This document specifies the procedures for the identification and handling of hazardous wastes for storage at the Laboratory. While only a limited number of known wastes will be managed in the RD&D treatment unit, this waste analysis plan describes the procedures for managing all wastes lab wide. This will ensure that any waste that is generated as part of the RD&D process will be properly characterized and managed.

The decision process for waste characterization and analysis is summarized in Table A-1.

1.1 Waste Analysis and Handling Procedures for Storage

When chemical substances are declared to be in excess, the originating group completes a Chemical Waste Disposal Request (Form 10-3A Part A, Figure A-1) and sends the form to the Waste Management Group (EM-7). The request lists the chemical waste the generating group needs to dispose of, the quantity and physical form of the wastes, and other pertinent information such as the condition of the containers. Material Safety Data Sheets (MSDSs) and existing analysis data may also be available and attached.

Using Part B of the Request Form (Form 10-3A Part B, Figure A-1), EM-7 staff can assign a Reactivity Group Number (RGN) to each container or bottle. The RGN is found from Figure A-2 (excerpted from EPA-600/2-80-076). The referenced EPA document, "A Method for Determining the Compatibility of Hazardous Waste," serves as the basis for the Laboratory procedure. For additional information, the user is referred to the EPA document cited. Additional information assigned during this review includes EPA codes and transportation information. The completed request form, container label, and MSDS/analytical data serve as the waste analysis record for the waste to be stored per the following segregation schemes.

1.2 Waste Segregation

To prevent adverse interactions of incompatible chemical wastes and to facilitate recycling or treatment of wastes, chemical wastes will be segregated into the following general categories:

- Organics, including solvent wastes such as acetone, benzene, and toluene.

- Corrosive acidic wastes, including organic and mineral acids.

- Corrosive caustic wastes.

- Oxidizers, such as perchloric or chromic acid, and nonacidic oxidizers, such as permanganates and chlorates.

- Reactive metals and compounds, such as sodium, lithium hydride, and phosphorous trichloride.

- Nonreactive metals, salts, and neutral compounds, such as lead and barium salts, and cyanide or sulfide compounds (in <5 gal. quantities only).

Utilizing the RGN assigned to the container and Table A-2, an area for storage of the waste is assigned. The organics and oxidizers have subcategories of segregation that will be followed by packaging/compositing of wastes to ensure that potential incompatibles are not combined together.

2.0 WASTE ANALYSIS AND HANDLING PROCEDURES FOR TREATMENT AND DISPOSAL

The analysis and handling procedures for waste requiring treatment and/or disposal follows. The decision process is summarized in Table A-1.

Several terms used throughout this section require further explanation.

- LDR is land disposal restricted. When used in this section it refers to all waste currently regulated under 40 CFR 268.

- TCLP metals means those eight metals regulated under the Toxicity Characteristic Leaching Procedure.

- KOP refers to "knowledge of process". In the case of original containers of materials, the information from the Chemical Disposal Request Form, as described earlier, is the KOP documentation. All other waste is documented by previous analyses or information provided by the generator.

- Labpack waste refers to original containers of hazardous materials no greater than 5 gallons in size.

- Coliwasa sampler also includes the use of coliwasa type sampling apparatus. Other equivlanent EPA SW-846 sampling methods, such as use of tubing or dipper, may be substituted for the coliwasa sampler.

2.1 Organic Waste

Organic waste is split into four processing categories: uncomposited labpack waste, drummed material, composited labpack waste, and composited drummed waste. The following discussions treat each as a unique analysis entity.

2.1.1 Uncomposited Labpack Waste

These wastes are those, that due to their toxicity or their physical (solid) state, will not be composited but will be packaged in overpack containers with absorbent. The entire container is then incinerated. The Laboratory's incinerator cannot generally receive such a package, therefore, most of this waste is and will be shipped offsite. The packing list of bottles and cans in the overpack container serves as the analytical record. This listing is sufficient to allow the identification of any and all LDR waste.

2.1.2 Drummed Waste

There are very few ongoing operations at the Laboratory that generate an organic process waste. As a result, each drum of this waste is virtually a unique entity. The exception would be those cases where we know more than one drum of waste came from the same place, e.g., 400 gallons of oil drained from the same machine reservoir. The drums are also sampled using a coliwasa or equivalent sampler if liquid or a core sampler if solid. Since this waste is destined for incineration, the following parameters are tested for: pH, ash content, viscosity, heat value, TCLP metals, total organic halogen, total organic chlorine, sulfur, and chemical composition. This latter will identify approximately ninety-five percent of the substances that are present in the waste. Availability of documented KOP will determine if the organic trace analyses need to be performed. Documentation or analyses will identify the presence/absence of organic LDR compounds, trichlorofluoromethane, bromoform, dichlorodifluoromethane and ethylene dibromide. These latter four compounds are only necessary if the waste is to be incinerated onsite. The test methods are listed in Table A-3.

Throughout the year, container of organic waste mixtures, smaller than a 55-gallon drum, are generated in the many laboratories at LANL. The generator maintains a list of the substances placed in these containers. This allows EM-7 personnel to confirm compatibility of these wastes before they are composited into 55-gallon or larger containers. When the composite receptacle is full, the waste is analyzed as described above for any large container of organic waste.

Solid organic waste is sampled using a core sampler or a grab sampler if the material can not be penetrated by a core sampler. Analytical parameters, frequencies, and test methods would be the same as those outlined above for any large container of waste. Debris that is organically contaminated is analyzed per Section 2.8.

2.1.3 Composited Labpack Waste

Composited labpack wastes are those bottles and cans of liquid waste that have been combined for the purpose of incineration. Compatibility is ensured by following the procedures in Section 1.1 and 1.2. Since all the chemicals in a composite drum are known entities, the list of chemicals and their quantity serves as the primary analysis record. This listing is sufficient to allow the identification of any and all LDR waste. When the drum is full, it is sampled with a coliwasa or equivalent sampler. Since chemical composition is known, only the physical parameters need to be calculated or analyzed for. If any physical characteristics can not be calculated due to the variety of substances placed in the drum, the sample is analyzed for that parameter. Therefore, analysis or calculation would provide pH, flashpoint, ash content, viscosity, heat value, total organic halogens, and total organic chlorine. The methods used for these analyses are specified in Table A-3. This will be done for each container of composited waste since each container is unique.

2.1.4 Composited Drummed Waste

Composited drummed waste are those drums of waste for which the analytical data described in Section 2.1.3 already exists and are combined in either the TA-54, Area L storage tanks or the liquid feed tanks at the incinerator for the purposes of offsite shipment or onsite incineration. Compatibility is ensured by following the procedures in Sections 1.1 and 1.2. Chemical and physical parameters can be calculated from the existing data. If at any time calculations of physical parameters, such as heat value, is inadequate, those identified analyses will be redone. The calculations will be performed on each unique tank of waste.

2.2 Corrosive Acid Waste

Corrosive acid waste is handled in two primary processing categories: labpack and process waste. The following discussions treat each as a unique analysis entity.

2.2.1 Labpack Waste

This wastestream consists of original containers of acid waste. The labels on the containers continue to serve as the primary analytical record. Those acids that can be reused by another component of the Laboratory are redistributed for use as a raw material. Those that can not be reused are treated by elementary neutralization. This occurs primarily at the TA-50 Liquid Waste

Treatment Plant but could occur throughout LANL in individual laboratories.

2.2.2 Process Waste

There are three categories of process waste: nonroutine nonmetallic waste, nonroutine metallic waste, and routine waste. Each is discussed separately. Documented KOP will negate the concern for the presence of LDR organic compounds. Therefore, references to LDR in this section refers only to inorganic constituents.

Nonroutine nonmetallic waste is periodically generated throughout the Laboratory. This waste will be analyzed for pH, the TCLP metals, nickel and thallium. This allows confirmation of the presence/absence of LDR material. The test methods employed are listed in Table A-3. Sampling is performed using a coliwasa or equivalent sampler. Because this is defined as a nonroutine wastestream, every unique drum or batch will be sampled.

Nonroutine metallic waste is generated primarily by the Laboratory's electroplating operations. At the time of generation, these wastes are identified by the generator as containing heavy metals. The generator may also provide the approximate metal concentration, if the information is available. This waste will be analyzed for pH, TCLP metals, nickel and thallium. This allows confirmation of the presence of LDR material and establishes the parameters that are analyzed for at the completion of treatment. The test methods employed are listed in Table A-3. Sampling is performed using a coliwasa or equivalent sampler. Because this is identified as a nonroutine wastestream, every unique drum or batch will be sampled.

There are five routinely generated acidic wastestreams at Los Alamos: nonmetallic nitric acid, nonmetallic sulfuric acid, nonmetallic acid stream, metallic ferric chloride, and metallic ammonium persulfate. Each of these streams has a confirmed basis for RCRA regulation which establishes the parameters of concern for treatment. All three of the nonmetallic acid streams are routinely analyzed for pH. The metallic ferric chloride is analyzed for pH, chromium, silver, lead, and copper. The metallic ammonium persulfate is analyzed for pH, lead, and mercury. Annually, all of these streams are all reevaluated for pH, TCLP metals, nickel, and thallium. This allows confirmation that the waste has not changed in composition and what LDR components are present. Sampling is conducted with a coliwasa or equivalent sampler. All test methods are listed in Table A-3.

If a nonroutine wastestream becomes a routine waste or a new wastestream is identified, it will follow the pattern established in the above paragraph. Routine testing parameters will be established and reverified on an annual basis.

2.3 Corrosive Basic Waste

Corrosive basic waste is split into two processing categories: labpack waste and process waste. The following discussions treat each as a unique analysis entity.

2.3.1 Labpack Waste

This wastestream consists of original containers of basic waste. The labels on the containers serve as the primary analytical record. Those bases that can be reused by another component of the Laboratory are redistributed for use as a raw material. Those that can not be reused are generally treated by elementary neutralization. This occurs primarily at the TA-50 Liquid Waste Treatment Plant but could occur throughout LANL in individual laboratories.

2.3.2 Process Waste

There are three categories of process waste: nonroutine nonmetallic waste, nonroutine metallic waste, and routine waste. Each is discussed separately. Documented KOP will negate the concern for organic LDR compounds. Therefore, references to LDR in this section refers only to inorganic constituents.

Nonroutine nonmetallic waste is periodically generated throughout the Laboratory. This waste will be analyzed for pH, the TCLP metals, nickel and thallium. This allows confirmation of the presence of LDR material. The test methods employed are listed in Table A-3. Sampling is performed using a coliwasa or equivalent sampler. Because this is defined as a nonroutine wastestream, every unique drum or batch will be sampled.

Nonroutine metallic waste is generated primarily by the Laboratory's electroplating operations. At the time of generation, these wastes are identified by the generator as containing heavy metals. This waste will be analyzed for pH, TCLP metals, nickel, thallium, and cyanide. This procedure allows confirmation of the presence of LDR material and establishes the parameters that are analyzed for at the completion of treatment. The test methods employed are listed in Table A-3. Sampling is performed using a coliwasa or equivalent sampler. Because this is defined as a nonroutine wastestream, every unique drum or batch will be sampled.

There are three routinely generated corrosive base process wastestreams at Los Alamos: ammonium etchant, "Replenisher" solution, and "Cuposit." The Replenisher and Cuposit are tradenames. The ammonium etchant is analyzed for pH, copper, and lead. The Replenisher is analyzed for pH and lead. The Cuposit is analyzed for pH and mercury. Annually, these wastestreams are all reevaluated for pH, TCLP metals, nickel, and thallium. This allows confirmation of the presence of LDR substances and that the waste has not changed in composition. Sampling is performed

with a coliwasa or equivalent sampler. Test methods used are listed in Table A-3.

If a nonroutine wastestream becomes a routine waste or a new wastestream is identified, it will follow the pattern established in the above paragraphs. Routine testing parameters will be established and reverified on an annual basis.

2.4 Oxidizer Waste

Oxidizer waste is split into two processing categories: acid waste and uncomposited labpack waste. Acid oxidizer waste is handled per Section 2.2.

Oxidizer labpack waste is not composited due to the high fire risk of doing so. They are packaged in overpack containers with absorbent. The entire container is then incinerated. The Laboratory's incinerator cannot generally receive such a package; therefore, most of this waste is and will be shipped offsite. The packing list of bottles and cans in the overpack container serves as the analytical record. This listing is sufficient to allow the identification of any and all LDR waste.

2.5 Reactive Wastes

Reactive waste has only two processing categories: uncomposited labpack waste and routine process waste. (Explosive waste is treated as a separate category of waste and discussed in Section 2.7). The following discussions treat each as a unique analysis entry.

2.5.1 Uncomposited Labpack Waste

Reactive labpack wastes are not composited due to the high fire and explosion risk of doing so. They are packaged in overpack containers with absorbent. The entire container is then incinerated. The Laboratory's incinerator cannot generally receive such a package; therefore, most of this waste is and will be shipped offsite. The packing list of bottles and cans in the overpack container serves as the analytical record. This listing is sufficient to allow the identification of any and all LDR waste.

2.5.2 Process Waste

The only ongoing operation at the Laboratory that generates a reactive process waste is the machining operations. Periodically, the machinists are required to work with lithium hydride and to a lesser degree lithium metal. This results in drums of lithium hydride dust and lithium chips, respectively. Process knowledge and the isolation of these operations when they do occur serves as the analytical record for this wastestream.

If large quantities of reactive waste should be produced elsewhere in the Laboratory, documented process knowledge would also be used as the analytical record.

2.6 Inorganic Wastes

Inorganic waste is split into two processing categories: uncomposited labpack waste and process waste. The following discussions treat each as a unique analysis entity.

2.6.1 Uncomposited Labpack Waste

These wastes are generally solid material and therefore do not lend themselves to compositing. They will be packaged in overpack containers with absorbent. The entire container is then usually destined for offsite land disposal. The packing list of bottles and cans in the overpack container serves as the analytical record. This listing is sufficient to allow the identification of any and all LDR waste.

2.6.2 Process Waste

Four categories of inorganic process waste exist: liquid waste, primary metal waste, nonroutine solid waste, and routine solid waste. Inorganic liquid waste is generally acidic or basic and is thus treated under the scenarios described in Sections 2.2 and 2.3.

Process knowledge is considered adequate for the further treatment/disposal/recycle of wastestreams such as lead and mercury. In both cases the metal is available as a hazardous waste but that knowledge alone suffices to allow for proper storage, treatment, and disposal.

Nonroutine solid waste is periodically generated throughout the Laboratory. This waste will be analyzed for TCLP metals, nickel, and thallium. This allows confirmation of the presence of inorganic LDR material. The absence of organic LDR will be established by either documented KOP or analyses. The test methods employed are listed in Table A-3. Sampling is performed using a core sampler if possible or a grab sampler if it is not possible to penetrate the waste with a core sampler. Because this is defined as a nonroutine wastestream, every unique drum or batch will be sampled.

There is one routinely generated inorganic solid waste at the Laboratory. It is the barium contaminated sand from the explosives burning operation. Barium is the only established parameter of concern for treatment and therefore is the only parameter routinely analyzed for. Annually, a sample will be analyzed for the other listed metals. Sampling is conducted with a core sampler. Test methods are listed in Table A-3.

If a nonroutine wastestream becomes a routine waste or a new wastestream is identified, it will follow the pattern established in the above paragraph. Routine testing parameters will be established and reverified on an annual basis.

2.7 Explosives Waste

Due to the limited number of areas producing explosives waste and the safety problems associated with analyzing explosives waste, process knowledge of the waste sent for treatment by open burning or open detonation is the waste analysis record. Table A-4 lists the various explosives used at the Laboratory. Open burning/open detonation is conducted under interim status per HWMR-5 Part VI, Section 265.382.

2.8 Contaminated Solid Waste

The waste covered by this category is generally classified as debris. Contaminated soil would be addressed under the respective chemical category as outlined in the above sections. The contaminant of concern is known for all waste in this category but the substrate can not be readily analyzed. Therefore, until the item in question is cleaned it is treated as a hazardous waste. The types of waste covered by this provision would be tanks and rags.

2.9 Waste Treatment Residuals

Waste treatment residuals are the liquid and solid wastestreams resulting from the treatment of a hazardous waste, such as: the treated liquid and precipitate from chemical treatment operations at either TA-50 or TA-54 and the scrubber water and ash from the incinerator. Barium contaminated sand is also a treatment residue but because it receives further chemical treatment it is discussed in Section 2.6.2.

The liquid from chemical treatment operations is tested to insure that (a) treatment is complete and (b) remaining chemical concentrations are within the discharge guidelines established under the NPDES permit for the TA-50 radioactive treatment system. Sections 2.2 and 2.3 discussed the procedure used to establish those parameters that would be tested for at the conclusion of the treatment. If documented KOP can not exclude the presence of F-listed solvents, then each batch of treatment supernate will be tested for the compounds listed in 261.3(a).2.iv.A and B. Samples from the Batch Waste Treatment Unit are taken from a sampling loop. Samples from the treatment tanks at TA-54 will be taken by either coliwasa (or equivalent) or grab sample. Test methods used are provided in Table A-3. The scrubber water from the incinerator will always be within the discharge guidelines established under the NPDES permit for the TA-50 radioactive treatment system thereby negating chemical analysis. The scrubber will be analyzed annually to verify this.

Solids from the chemical treatment operations and the ash from the incinerator are tested for the TCLP metals that were established before treatment to be present. As necessary, these wastes are then cemented or otherwise solidified. The solidified matrix may again be sampled by removing a sample from the mixture before curing. After curing, it is tested for the same TCLP metals. Assuming there is no listed materials present, this would allow a determination to be made as to whether the waste remained a hazardous waste or not. This procedure would be followed for each batch of solids requiring processing.

2.10 Unknown Material

Occasionally, chemicals of an unknown nature require disposal. These wastes are handled on a case-by-case basis. The individual waste may be tentatively characterized by knowledge of the operations and activities that were performed in the specific area in which the waste was generated. This information is used to restrict the choices of initial waste analysis to a small population of chemicals.

For purposes of managing unknown wastes a small volume is defined at LANL as less than one liquid gallon (or approximately four liters). The rationale for the small volume designation is that this is the minimum quantity of sample which is needed to test if the waste is hazardous. At and below this limit the sample is actually consumed in the analytical procedure. Small volumes of unknown wastes are analyzed for pH, flashpoint, and reactivity. This allows the material to be categorized for further handling.

Volumes greater than one gallon or four liters of a single unknown waste require a more detailed analytical scheme. These wastes are tested for hazardous waste characteristics and any other analyses indicated by the initial data gathered on the material. Sufficient detail must be reported to allow the assignment of the proper EPA Hazardous Waste Number to the waste. All test methods used are outlined in Table A-3.

TABLE A-1
WASTESTREAMS, ANALYTICAL PARAMETERS, AND RATIONALE

Wastestream	Analytical Parameters	Rationale (Section Reference)
Organic Waste		
- Uncomposited labpack	Packing list	2.1.1
- Drummed	pH, TCLP metals, TOX, TOC, ash content, viscosity, heat value, sulfur, chemical composition	2.1.2
- Composited labpacks and drums	List of chemicals, pH, flashpoint, ash content, viscosity, heat value, TOX, TOC	2.1.3 2.1.4
Corrosive Acid		
- Labpack	pH, as necessary	2.2.1
- Nonroutine nonmetallic process waste	pH, TCLP metals, nickel, thallium	2.2.2
- Nonroutine metallic process waste	pH, TCLP metals, nickel, thallium	2.2.2
- Routine nonmetallic process waste	pH	2.2.2
- Ferric chloride	pH, chromium, silver, lead, copper	2.2.2
- Ammonium persulfate	pH, lead, mercury	2.2.2
Corrosive Base		
- Labpack	pH, as necessary	2.3.1
- Nonroutine nonmetallic process waste	pH, TCLP metals, nickel, thallium	2.3.2
- Nonroutine metallic process waste	pH, TCLP metals, nickel, thallium	2.3.2

TABLE A-1 (CONT)
WASTESTREAMS, ANALYTICAL PARAMETERS, AND RATIONALE

Wastestream	Analytical Parameters	Rationale (Section Reference)
- Ammonium etchant	pH, copper, lead	2.3.2
- "Replenisher"	pH, lead	2.3.2
- "Cuposit"	pH, mercury	2.3.2
Oxidizer		
- Labpacks	Packing list	2.4
Reactive		
- Labpacks	Packing list	2.5.1
- Process waste	Knowledge of process	2.5.2
Inorganic		
- Labpack	Packing list	2.6.1
- Primary metals	Knowledge of process	2.6.2
- Nonroutine solid	TCLP metals, nickel, thallium	2.6.2
- Barium sand	Barium	2.6.2
Explosives	Knowledge of process	2.7
Contaminated Debris	Knowledge of process	2.7
Waste Treatment Residues		
- Chemical treatment liquids/solids	Previously established parameters	2.9

TABLE A-1 (CONT)
WASTESTREAMS, ANALYTICAL PARAMETERS, AND RATIONALE

Wastestream	Analytical Parameters	Rationale (Section Reference)
- Incinerator ash	Previously established parameters	2.9
- Incinerator scrubber water	Knowledge of process	2.9
Unknowns		
- Small volume (<1 gal.)	pH, flashpoint, reactivity	2.10
- Large volume	All parameters necessary to identify waste completely	2.10

TABLE A-2
PACKAGING SEGREGATION SCHEME

STORAGE CATEGORY	PACKAGING CATEGORY	RNG
Organics (1)	A	4, 5, 9, 13, 14, 16, 17, 19, 26, 29, 31, 32, 101
	B	6, 7, 8, 27, 28
	C	12, 20
	D	34, 18
Oxidizers (2)	A	2
	B	104
	C	30
Acids (3)	N/A	1, 3
Bases (4)	N/A	10, 11, 33, 105
Reactives (5)	N/A	21, 22, 25, 102, 107 - ALL STORED INDIVIDUALLY - NO COMBINING ALLOWED
Nonreactive Metals (6)	N/A	11, 15, 23, 24, 33 - 11 and 33 would only be allowed in labpack, solid quantities
Others		The following must be evaluated on a case-by-case basis to determine which of the above categories is appropriate: 25, 102, 103.

TABLE A-3
WASTE ANALYSIS PARAMETERS AND TEST METHODS

Parameter	Test Method	Reference[1]
Ignitability	Pensky-Martens	(L) SW1010
	Closed-Cup Method	(L) ASTM D93-80
Reactivity	Numerous methods and tests[2]	(L,S) SW Section 2.1.3
pH	Electrometric	(L) SW9040
TCLP	TCLP Extraction[3] and Graphite Furnace AA Spectroscopy	(L,S) SW1310
Arsenic		(L) SW7060
Barium		(L) SW7081, SW7080
Cadmium		(L) SW7131, SW7130
Chromium		(L) SW7191, SW7190
Lead		(L) SW7421, SW7420
Selenium		(L) SW7740
Silver		(L) SW7761, SW7760
Mercury	TCLP Extraction[3] and Manual Cold Vapor Technique	(L,S) SW1310
Organochlorine Pesticides	TCLP Extraction[3] and Gas Chromatography	(L) SW8080
Chlorinated Herbicides		(L) SW8150
Toxicity Characteristic Leaching Procedure (TCLP)		(L,S) 40 CFR Part 268, Appendix I
Chemical Composition	95% organic composition by GC/FID	(L) SW8100

TABLE A-3 (CONT)
WASTE ANALYSIS PARAMETERS AND TEST METHODS

Parameter	Test Method	Reference[1]
Trace Organic Analysis	Any of the following:	
	Volatile organic compounds-GC/MS	(L) SW8240
	Semi-volatile organic compounds-GC/MS	(L) SW8250
	-Packed column	(L) SW8270
	-Capillary column	
Heat Value	Bomb calorimeter	(L) A006, ASTM D240
Organic Chlorine	Halide titration of combustion residue	(L,S) A004, ASTM D2361
Ash Content	Residue after combustion in muffle furnace	(L) A001, ASTM D482 (L) A001, ASTM D3174
Cyanide-Free and Total	Distillation and colorimetric (UV)	(L) SW9012
Chrome	Colorimetric method for hexavalent chromium	(L) SW7196
Sulfide	Colorimetric titration	(L) SW9030

TABLE A-3 (CONT)
WASTE ANALYSIS PARAMETERS AND TEST METHODS

Parameter	Test Method	Reference[1]
Total Metals	Digestion and inductively coupled plasma method	SW3020
Arsenic		(L) SW6010
Barium		(L) SW6010
Beryllium		(L) SW6010
Cadmium		(L) SW6010
Chromium		(L) SW6010
Lead		(L) SW6010
Nickel		(L) SW6010
Selenium		(L) SW6010
Silver		(L) SW6010
Thallium		(L) SW6010
Zinc		(L) SW6010
Mercury	Manual cold vapor technique (S) SW7471	(L) SW7470
Free Liquids	Paint filter liquids test	(S) SW9095

(1) "A" refers to Sampling and Analysis Methods for Hazardous Waste Combustion, EPA-600/8-84-002, February 1984.
"ASTM" refers to American Society for Testing Material Standards.
"SW" refers to Test Methods for Evaluating Solid Waste, Physical/Chemical Methods, 3rd Edition, EPA, November 1986.
"L" refers to liquid waste.
"S" refers to solid waste.

(2) Methods for cyanide and sulfide gas generation are pending. SW-846 methods will be used when they become available. Methods recommended by EPA will be used in interim.

(3) If TCLP and other analyses do not permit identification of an unknown chemical waste, digested metal samples (per SW3020) will be analyzed for the metals noted.

TABLE A-4

ESTABLISHED EXPLOSIVES AT TA-16
NOMINAL COMPOSITIONS

NAME OR CODE	COMPOSITION
A1 ANFO[a]	Ammonium nitrate/fuel oil/aluminum power
AN	Ammonium nitrate
ANFO	Ammonium nitrate/fuel oil
Baratol	76 wt% Barium nitrate/24 wt% TNT
BDNPA	Bis(dinitropropyl) acetal
BDNPF	Bis(dinitropropyl) formal
Black powder	74 wt% Potassium nitrate/15.6 wt% charcoal/10.4 wt% sulfur
Boracitol	60 wt% Boric acid/40 wt% TNT
BTX	5,7-Dinitro-1-picrylbenzotriazole
Composition A-3	91 wt% RDX/9 wt% beeswax
Composition A-4	97 wt% RDX/3 wt% beeswax
Composition A-5	98.5 wt% RDX/1.5 wt% beeswax
Composition B and B-3	60 wt% RDX/40 wt% TNT
Composition C-3	88 wt% RDX/12 wt% wax
Composition C-4	91 wt% RDX/2.1 wt% polyisobutylene/1.6 wt% motor oil/5.3 wt% de(2-ethylhexyl) sebacate
Cyclotol, 75/25	75 wt% RDX/25 wt% TNT
Cyclotol, 70/30	70 wt% RDX/30 wt% TNT
DATB	Diaminotrinitrobenzene
DBA-1[a]	AN/$NaNO_3$/TNT/H_2O/thickener
Detasheet C	63 wt% PETN/8 wt% NC/29 wt% elastomeric binder
Detasheet D	75 wt% PETN/25 wt% elastomeric binder
	NOTE: Although this material may be red in color, it is an explosive and not an inert material.
DINGU	Dinitroglycoluril
DNPA	2,2-Dinitropropyl acrylate polymer
DNT	Dinitrotoluene
EDC-8[b]	76 wt% PETN/24 wt% Silicone rubber, MS 2420
EDC-28[c]	94 wt% RDX/6 wt% FPC 461
EDC-32[d]	85 wt% HMX/15 wt% Viton A
EDC-37[e]	91 wt% HMX/1 wt% nitrocellulose/8 wt% K-10 liquid
*EDC-38[f]	94.5 wt% HMX/3.5 wt% K-10 Liquid/2 wt% Polyurethane
HBX-1	40 wt% RDX/38 wt% TNT/17 wt% Al/5 wt% Wax/0.5 wt% $CaCl_2$

TABLE A-4

ESTABLISHED EXPLOSIVES AT TA-16
NOMINAL COMPOSITIONS
(CONTINUED)

NAME OR CODE	COMPOSITION
High Energy Propellants[g]	Solid propellants generally used in missile systems
HMX	Cyclotetramethylenetetranitramine
HNS	Hexanitrostilbene
K-10[h]	65.3 wt% dinitroethylbenzene/34.7 wt% trinitroethylbenzene
LX-04	85 wt% HMX/15 wt% Viton A
LX-07	90 wt% HMX/10 wt% Viton A
LX-14	95.5 wt% HMX/4.5 wt% Estane 5702 F-1
Methane/oxygen[h]	Explosive mixtures of methane and oxygen gases
NC	Nitrocellulose, cellulose nitrate
Nitromethane	Nitromethane
NQ	Nitroguanidine
NTO	1,2,4-nitro-triazole-5-one
Octol	75 wt% HMX/25 wt% TNT
PBX-9001	90 wt% RDX/8.5 wt% polystyrene/1.5 wt% dioctyl phthalate
PBX-9007	90 wt% RDX/9.1 wt% polystyrene/0.5 wt% dioctyl phthalate/0.4 wt% resin
PBX-9010	90 wt% RDX/10 wt% Kel-F 3700 elastomer
PBX-9011	90 wt% HMX/10 wt% Estane 5703 F-1
PBX-9205	92 wt% RDX/6 wt% polystyrene/2 wt% dioctyl phthalate
PBX-9206	92 wt% HMX/8 wt% Kel-F 3700 elastomer
PBX-9401	94.2 wt% RDX/3.6 wt% polystyrene/2.2 wt% trioctyl phosphate
PBX-9404	94 wt% HMX/3 wt% nitrocellulose/3 wt% chloroethyl phosphate
PBX-9405	94 wt% RDX/3 wt% nitrocellulose/3 wt% chloroethyl phosphate
PBX-9407	94 wt% RDX/6 wt% Exon 461
PBX-9501	95 wt% HMX/2.5 wt% Estane/2.5 wt% BDNPA/F
PBX-9502	95 wt% TATB/5 wt% Kel-F 800
PBX-9503	80 wt% TATB Class 2)/15 wt% HMX (Class 2)/5 wt% Kel-F 800
PBXW-113	88 wt% HMX/12 wt% rubber/plasticizer binder
Pentolite	50 wt% PETN/50 wt% TNT

TABLE A-4

ESTABLISHED EXPLOSIVES AT TA-16
NOMINAL COMPOSITIONS
(CONTINUED)

NAME OR CODE	COMPOSITION
PETN	Pentaerythritol tetranitrate
Picric Acid	Du Pont 85 wt% pure
PYX	2,6-Bis(picrylamino)-3,5-dinitropyridine
RDX	Cyclonite, cyclotrimethylenetrinitramine
Smokeless Powder (Single Base)	Standard military grades. Single or multi-perforated grains of colloided nitrocellulose. Stabilizers, plasticizers, inorganic nitrates, and other modifying agents may also be present.
Smokeless Powder (Double Base)	Standard military grades. Single or multi-perforated grains of colloided nitrocellulose containing nitroglycerine or nitroglycol. Stabilizers, plasticizers, inorganic nitrates, and other modifying agents may also be present.
STRATABLAST C[a]	Slurry blasting explosive
TAGN[h]	Triaminoguanidine nitrate
TAL-1005E[a]	Slurry blasting explosive
TATB	Triaminotrinitrobenzene
Tetryl	2,4,6-Trinitrophenylmethylnitramine
TNS	Trinitrostilbene
TNT	Trinitrotoluene
TNT/NC	80 wt% TNT/20 wt% NC
Tritonal	80 wt% TNT/20 wt% aluminum powder
XTX-8003	80 wt% Recrystallized PETN/20 wt% Sylgard 182
XTX-8004	80 wt% RDX/20 wt% Sylgard 182

---

[a]For transportation only to and from M- and WX-Division Groups and storage by group WX-3.
[b]EDC-8 is the United Kingdom's version of XTX-8003.
[c]EDC-28 is the United Kingdom's version of PBX-9407.
[d]EDC-32 is the United Kingdom's version of LX-04.
[e]For shipping, storage, and experimental evaluation of quantities less than 5 g and for assembly of finished charges into test devices only.
[f]For shipping, storage, and analytical evaluation of molding powder and assembly of finished pieces into test devices.
[g]After approval by the Explosives Development Committee.
[h]For shipping, storage, and experimental evaluations on less than 5-g quantities.

ATTACHMENT 2

DIAGNOSTIC EQUIPMENT AND ANALYTICAL TECHNIQUES

HYDROTHERMAL PROCESSING UNIT
RD&D PERMIT

1.0 INTRODUCTION

The Hydrothermal Processing Unit uses a treatment technology involving oxidation in supercritical water. The objective of the RD&D permit will be to demonstrate the suitability of the technology for the treatment of hazardous waste propellants, explosives, and pyrotechnics (PEP). Many analytical and spectroscopic techniques are needed to identify and quantify the effluent products and reactants resulting from the supercritical water oxidation process. An important goal of the RD&D experiments will be to achieve a mass balance between waste reactant and product species. For purposes of this discussion these techniques are divided into gas phase analyses and liquid analyses. Brief descriptions are given of each.

2.0 GAS PHASE ANALYSIS TECHNIQUES

2.1 Fourier-Transform Infrared Spectroscopy (FTIR)

A procedure using the FTIR was developed to quantify the concentration (and thus number of moles) produced of carbon dioxide (CO_2) and nitrous oxide (N_2O), which are the primary gas phase products. Calibration curves for CO_2 and N_2O were obtained by measuring the fraction of infrared light absorbed by a series of known concentrations of CO_2 or N_2O in the range expected to be produced in supercritical water oxidation reactions. The unknown concentration is determined by measuring the fraction of infrared light absorbed by the unknown sample (i.e., the volatile components of the reactor effluent).

The dependence on concentration of the integrated absorbance of each of the two major CO_2 IR absorptions (asymmetric OCO stretch, 2350 cm^{-1} and OCO bend, 630 cm^{-1}) is nonlinear, exhibiting distinctive saturation behavior over the range of pressures (concentrations) from 0.1 to 10 torr. Another observation that has been noted is that for a given pressure of CO_2, the observed absorption intensity increases with increasing total pressure. Pressure broadening of absorption lines is a well-understood phenomenon. As total pressure is increased, some molecules will absorb light further from the center of each rotational line causing a decrease in the center intensity and a concomitant

broadening of the peak. The integrated absorbance should remain constant.

During previous experiments with surrogate (i.e., non-waste) compounds, the anomalous behavior of initial results was explained by reasoning that the rotational linewidths of most small molecules (including CO_2) are much narrower than those the FTIR is capable of resolving (maximum resolution = 0.5 cm^{-1}). The observed lines are a convolution of the instrument resolution function and the actual line shape and thus appear to be optically thick to the FTIR, meaning that essentially all the radiation at center frequency appears to be absorbed, resulting in a "saturated" absorbance. As the pressure is increased, more light is absorbed away from the center frequency while the center continues to absorb essentially all the incident radiation. Since the lines are not fully resolved by the spectrometer, absorption of additional light in the wings of the narrow line, but still within the instrument resolution, results in a higher apparent absorbance. This effect can be eliminated by reducing the concentration of the absorbing species or the pathlength until the line centers are no longer saturated or by increasing the total pressure until the linewidths are comparable to the instrument resolution. The White cell that was used did not have the capability to hold pressures higher than atmospheric so the nonlinearity of the calibration curves was not completely corrected for during initial experiments. The calibrations and unknown pressure determinations were made at a total pressure of 600 torr, using nitrogen (N_2) or helium as a buffer gas. The resulting calibration data were fit to a saturation function, $y=a(1-e^{-bp})+cP$ where P is the partial pressure of the absorbing gas. This technique enables the measurement of gas pressure with a relative standard deviation of 3%.

2.2 Gas Chromatography/Mass Spectroscopy (GC/MS)

Three gas chromatographs (GC) have been set up for analysis of the gaseous effluent from the reactor. The GC technique is complementary to FTIR, since it is capable of detecting H_2, O_2, and N_2, in addition to all other gases. The GCs include one HP 5890A Series II with capillary injection ports operated with HP ChemStation software control from a 386-based IBM-compatible computer, and two Perkin-Elmer Model 8410. A 10-port gas sampling valve is used to inject gas samples of ~0.1 ml into the capillary column. The carrier gas is helium except for one of the gas chromatographs where argon is used for the detection of H_2. Thermal conductivity detectors are installed for quantitative detection of the eluting gases. The column used for separating O_2, N_2, H_2, CO, CO_2, CH_4 and CH_3OH is a Chrompack CarboPLOT with carbon molecular sieve adsorbent and dimensions of 30 meters in length and 0.53 millimeter inner diameter. A molecular sieve 5A column run in the isothermal mode at -40 °C is used for H_2 and an Alltech CTR-1 column with a temperature ramp program from -10 °C to 180 °C is used for the other gases.

The mass spectrometer is a HP 5971 MSD, and this diagnostic instrument may also be for detection of gases and liquids that elute from the column. Additionally, a GC-FTIR interface is installed with a Mattson 500 series FTIR spectrometer and may be used to characterize the separated compounds.

2.3 Quadrupole Mass Spectrometry (QMS)

A UTI quadrupole mass spectrometer may also used for detection of H_2, N_2, O_2. Gaseous products are sampled on-line through a leak valve. To obtain a steady leak rate, a constant backing pressure of sample plus helium buffer gas (600 torr total) is maintained. The pressure in the quadrupole region was typically in the 10^{-5} torr range. Calibration of this technique has so far proven difficult due to constantly changing backgrounds.

3.0 LIQUID PHASE ANALYSIS TECHNIQUES

3.1 Metals

The metals for which analysis may be performed include sodium, chromium, nickel, iron, molybdenum and gold. In most cases the analysis may be performed using a Perkin-Elmer inductively coupled plasma spectrophotometer (ICP) using indium as an internal standard for all the metals except sodium, where a lanthanum internal standard is used. If very low detection limits are required, the samples may be analyzed using a graphite furnace or flame atomic absorption.

3.2 Total Organic Carbon (TOC) and Total Inorganic Carbon (TIC)

Total organic carbon (TOC) and total inorganic carbon (TIC) are analyzed using a Rosemount Dohrmann Model DC-190 Carbon Analyzer. Calibrations are done with each set of samples using different concentrations of standardized potassium acid phthalate solution.

3.3 Inorganic Anions

Inorganic anions, particularly nitrate, nitrite and chloride, may be analyzed with a Dionex 4500i Series Ion Chromatograph using a Dionex IonPac AS4A column with an eluent consisting of 1.5 mM $NaHCO_3$ and 2.2 mM Na_2CO_3. In most cases conductivity detection is used, but a UV/Visible detector set at 215 nm is used for low levels of nitrate and nitrite.

3.4 Ammonium

Ammonium ion concentration is determined using an Orion Model 95-12 ammonia electrode using an ionic strength adjuster (ISA) containing 5 M NaOH, 0.05 M ethylenediaminetetraacetic acid (EDTA), and 10% methanol. The ISA converts the ammonium ion to dissolved ammonia gas that is detected by the electrode.

3.5 TNT, PETN, HMX, NQ, and RDX

Presently, trace amounts of these explosives are being analyzed by reverse phase liquid chromatography on the Dionex 4500i, but in the future some samples may be analyzed using a gas chromatograph equipped with a nitrogen phosphorus detector (NPD). The liquid chromatograph uses a Waters 490E Programmable Multiwavelength Detector that allows for simultaneous, multiwavelength detection. This feature is particularly useful if interferences are present, since interferences usually give different signals at different wavelengths. All these compounds are analyzed using a 150 millimeter long by 2.1 millimeter inner diameter C8 narrow-bore column that is slightly heated for temperature stability. Trinitrotoluene (TNT) is measured using an eluent of 35% methanol and 4.5% tetrahydrofuran (THF) at 0.3 ml/min in a 6.7 μl sampling loop at wavelengths of 240 and 260 nm; PETN is measured using 48% methanol at 0.3 ml/min in a 27 μl loop a 215 and 230 nm; RDX and HMX are both measured using 32% methanol and 4.8% THF at 0.3 ml/min in a 15 μl loop at 235 and 245 nm; and NQ is analyzed using 4% methanol at 0.3 ml/min in a 9.5 μl loop at 263 and 275 nm.

3.6 Methanol

Methanol is analyzed using an SRI Model 8610 gas chromatograph by direct injection on a 30 x 0.53 mm J&W Scientific DB-Wax column at 60 °C.

ATTACHMENT 3

STANDARD OPERATING PROCEDURES (SOP)

Los Alamos National Laboratory

HYDROTHERMAL PROCESSING
RD&D PERMIT

SAFETY PLAN FOR CONTINUOUS-FLOW HYDROTHERMAL PROCESSING EXPERIMENTS

GROUP MEE-9/13 REVIEW AND APPROVAL

Bob McFarland 2/5/93

Bob McFarland, Originator Date

Lee Dalton, MEE-13 Date
Group Safety Representative

Yvonne Gonzales, MEE-9 Date
Group Safety Representative

Charles Anderson, MEE-13 Date
Group Leader

Edward L. Joyce, MEE-9 Date
Group Leader

MEE DIVISION REVIEW AND APPROVAL

Joe Szoo, Date
Division Safety Representative

Daniel S. Metzger Date
Division Leader & Safety
Committee Chairperson

EMERGENCY PROCEDURE

Safety Plan for Hydrothermal Processing Waste Destruction Experiments

Emergency Procedures:

For an electric shock: back-up personnel will turn off power, call 9-911 for assistance and ambulance, and provide CPR or first aid until help arrives.

If an ambulance is needed, tell the dispatcher. Stay on the line to provide all requested information.

Working on or with energized, potentially hazardous electronic and electrical equipment will require a back-up person with CPR training in sight of the work ready to provide assistance.

For a thermal burn: Take or transport person to Occupational Medicine, HS-2, regardless of the apparent severity of the contact.

If any fire occurs, regardless of the severity, call the Fire Department on 9-911. If an ambulance is needed, tell the dispatcher. Stay on the line to provide all requested information.

Flammable solvent spill: call fire department on 9-911, move a fire extinguisher to the spill area, no smoking or open flames allowed prior to cleanup.

Non flammable solvent spill (e.g. trichloroethane): call HS-5, Industrial Hygiene, to monitor cleanup. For skin contact, immediately wash with soap and water. For eye contact, use drench hose to flush with water. Take or transport person to Occupational Medicine, HS-2, regardless of the apparent severity of the contact.

For physical injury resulting from dropping a heavy object or contacting a sharp object, provide first aid, call an ambulance if needed or transport person to Occupational Medicine, HS-2.

For physical injury resulting from explosion or fire due to mixing of reactants call the Fire Department on 9-911. If an ambulance is needed, tell the dispatcher. Stay on the line to provide all requested information.

<u>Contacts:</u>

If any person is injured or any fire occurs in the area, call 9-911 first, then the following people should be contacted:

Bob McFarland	667-2214	Home: 662-6420
Charles Anderson	667-5150	Home: 672-3376

The group office will then inform the division office of the incident. For a major incident the HS-DO Emergency Response Coordinator will be notified at

667-7878 or the Laboratory Office of Emergency Management (OM-1) at 667-6211.

CONTINUOUS-FLOW HYDROTHERMAL PROCESSING SYSTEM

PURPOSE

The purpose of the continuous-flow hydrothermal processing system is to determine destruction of hazardous waste at small concentrations in water. Various wastes (reductants) will be investigated, including hydrocarbons, oxygenated hydrocarbons, and halogenated hydrocarbons. Various reactor concepts and reactor materials will be evaluated using the same basic system.

SYSTEM AND EQUIPMENT

The continuous-flow hydrothermal processing system is shown in the attached schematics. It consists of an oxygen supply system, a water and reductant supply system, a reactor in which the reductant is to be oxidized, a cooldown and pressure letdown system, and containment vessels for separation and hold.

The oxygen supply system consists of a pressurized gaseous oxygen reservoir (standard 2000-2400 psi oxygen bottles), an air-driven oxygen booster to boost the oxygen to a MOP (maximum daily operating pressure) of 4500 psi, a 2-liter oxygen accumulator certified by the manufacturer to a MAWP (maximum allowable working pressure) of 5500 psi (and tested by us to 7500 psi), a flow control module, a remotely controlled shut-off valve and a check valve. Also included in the oxygen system are a remotely-controlled oxygen supply shut-off valve, a remotely controlled oxygen system vent valve and a remotely controlled air-supply shut-off valve. The above-mentioned remotely controlled valves will be controlled from the adjacent control room. The oxygen booster is provided with a pilot valve which shuts off the booster when the outlet pressure reaches 4500 psi. A relief valve is included to prevent over-pressurization of the booster and oxygen system. Both the relief valve and the vent valve are vented to the outside. Regulated nitrogen from a pressurized nitrogen supply is used to drive the booster (and the pneumatic valves). Oxygen is supplied to the main flow stream through an injector. Pressure transducers are located at strategic points in the oxygen supply system. Maximum oxygen flow is about 30 standard liters per minute (SLPM). If a measured pressure goes above 5000 psig, the system is automatically shut down.

The water/reductant system consists of two feed tanks for pure water and a water/reductant mixture, a two-way switching valve (remotely controlled), a metering pump capable of pumping up to 2.5 GPH of liquid at up to 5500 psi. This pump is driven by an electric motor and the output flow rate may be varied remotely. The system pressure is controlled by the pressure letdown valve. Pressure relief valves, pressure transducers, and surge suppressers are provided.

The initial preheater/reactor is an Inconel 625 tube, 18 feet long by 0.188-in inside diameter by 0.308-in outside diameter. The preheater section of the tube is heated with electric-resistance cable heaters at total power levels up to about 9 kW. The reactor part of the tubing is guard-heated at a much lower power level, and the whole tube is insulated to reduce heat losses. The maximum operating temperature will be 650 C (1200 F) and the design is such that the maximum reactor tube stress at the MAWP (5000 psi) will be below the maximum allowable working stress for the material at 1200 F. Approximately

30 thermocouples are attached to the outer wall of the preheater/reactor tube to monitor material temperatures along the length of the preheater/reactor and to provide power-supply control input. If any preheater/reactor temperatures go above 700°C the system is automatically shut down.

Following the reactor is a cooldown heat exchanger and a pressure letdown valve. The process stream side of the heat exchanger is of the same tubing as the reactor. The water side of the heat exchanger is connected to an on-site "chill-water" system. The process stream temperature at the outlet of the heat exchanger is monitored and if it goes above 110°C, the system is automatically shut down. The pressure-letdown valve controls the system pressure by a remotely-controlled valve opening.

In the low-pressure, low-temperature part of the system downstream of the pressure letdown valve are a pair of product tanks capable of pressures up to 130 psig. The tanks are to separate the gaseous and liquid products and to hold at least 30 minutes worth of effluent for sampling to determine if the gaseous effluent is safe to vent to the atmosphere. All lines in the high-pressure, low-temperature parts of the system use high-pressure 316 stainless steel tubing and fittings.

Responsible Individuals:

Bob McFarland is directly responsible for ensuring that the specified procedures are followed. The persons in MEE-9 who are responsible for this work and adherence to this SOP are:

Bob McFarland
Ray Brewer
Edward L. Joyce, Group Leader

The MEE-9 Group Office is located at TA-3, SM-29, room 1249, telephone 667-5400.

HS-Division will provide safety and health data whenever requested by MEE-9. This may include ventilation surveys and information on the toxicity of materials to be tested.

Organization and location of work:

MEE-9 operates this equipment at TA-46, Building 16, Test Cell 1. The building belongs to MEE-13, Charles Anderson, Group Leader.

Operation:

The following operations and activities typically occur in this Lab area:

- High temperature reactor operation
- Pressurization of equipment up to 345 bars (5000 psi)
- Assembly of instrumentation devices
- Non-toxic organic liquid waste usage

Description of Work:

The continuous-flow hydrothermal processing system is operated to evaluate different waste materials and different operating parameters to determine waste destruction efficiency, and to evaluate different reactor concepts and materials. New materials and parameters may require modification of equipment and instrumentation.

A typical run consists of starting the oxygen booster to pressurize the oxygen accumulator with the valve between the oxygen system and the main process stream closed. The water/waste pump is then started at a predetermined rate with the pressure letdown valve fully opened. The control valve is then gradually closed to increase the system pressure gradually until the pressure reaches a predetermined level (typically about 3700 psig). The oxygen valve is then opened and oxygen flow is controlled at a predetermined rate by the oxygen flow control module. The reactor heater power is then increased at a predetermined rate until the desired reactor temperature is reached.

Terminating a run is accomplished by shutting off the heating power to the reactor, shutting the oxygen supply valve and booster air supply valve, shutting the oxygen-to-mainstream valve, venting the oxygen system, and switching to pure water feed. When the reactor temperature has dropped below 100°C, the system pressure is brought down by opening the pressure letdown valve fully.

The work is coordinated by the responsible staff member and the work performed by the responsible technician.

Hazards:

The probable hazards from operations within the test cell include gas flow noise, electrical shocks from 110, 220 or 440 volts, thermal burns from the heated portion of the equipment, fire from solvents, exposure to various gases or liquids, catastrophic failure of a pressure vessel or high pressure lines and cuts or injury from lifting heavy pieces of equipment.
Several chemicals are used routinely in the area. These include:

Compressed gases: nitrogen and oxygen
Liquids: pump oil, hydrocarbons, oxygenated hydrocarbons

Safe Operation Procedures:

1. Standard Procedures:

Standard safe operating procedures require that all personnel be out of the test cell whenever high pressure is present. Personnel associated with the run are located in the adjacent control room from which the run may be monitored and controlled. Responsible personnel may enter the test cell temporarily to make adjustments provided that the oxygen system pressure is below 3000 psig. Initial work for a run, before high pressure is present, may be done in the test cell. The system is designed with pressure relief to prevent pressurization of the equipment above the rated value. The design of the system is such that one person may operate it, provided that the area supervisor is notified that a run is to be made.

2. Safe Procedures for Electronic and Electrical Work:

The procedures that will be adhered to because there is a realistic exposure to energized a electronic and electrical equipment are: No person working on the system shall be alone, out of sight of a backup during work that has some potential hazard. This includes repairing, replacing or modifying the electric equipment in the system.

The experimenting team will maintain drawings and a communication procedure for the system so that all team members are aware of the status of the equipment and any modifications.

Emergency procedures for all operations will be posted.

3. Safe Procedures for Thermally Heated or Cooled Surfaces:

Thermally heated surfaces are the preheater/reactor and lines to the heat exchanger. Temperatures can reach as high as 700 C. Where personnel must work in close proximity to the surfaces, the surfaces will be shielded or guarded to prevent contact. If contact does occur, transport the injured person to Occupational Medicine, HS-2, regardless of the apparent severity of the injury.

4. Safe Procedures for Organic Chemicals Use:

A variety of organic chemical wastes may be tested in the equipment. Industrial Hygiene, HS-5, will be contacted to determine the protection necessary in dealing with each specific chemical. Protective clothing including gloves, goggles, a full-face respirator and supplied air will be used as required.

MEE-9 will maintain a file of Manufacturer's Safety Data Sheets (MSDSs) for all chemical materials used in experiments. The MSDSs are located in the control room.

5. Safe Procedures for Vacuum System operations:

Vacuum pumps should have exhaust filters. Any drive belts shall have covers.

6. Continuous Operation of Equipment:

Most runs will be made during the course of a regular work day and an operator will be in the vicinity of the test. If a test is done overnight a continuous operating permit form will be attached to the test cell door. It will contain the names of the appropriate people to contact and the appropriate shutdown procedures.

Protective Equipment:

The following protective equipment is readily available for use as required in this experimental work:

safety glasses, face shield, protective gloves, ear protection devices, and lab coats

Whenever any questions exist on the application of protective equipment, HS-5, Industrial Hygiene, or HS-3, Safety, should be contacted.

7. Hazardous Waste Generation and Disposal

Until such time as the continuous-flow unit can be shown an effective hazardous waste destruction unit, all effluent will be treated as hazardous waste when hazardous materials are present in the feed. The effluent will be labeled as to its composition in the feed and transported to the Satellite Station at TA-46.

For the first phase of the experimental program the hazardous materials (when present) will be 2 to 4 percent of a surrogate waste such as acetone, MEK, methanol, etc. (i.e., pure, commercially available hydrocarbon and oxygenated hydrocarbon materials). Before "real" wastes are used we will obtain a R.D. & D. permit.

The throughput of the experimental unit is such that no more than 500 ml of surrogate waste will be handled at a time, minimizing the

hazardous waste production and reducing the severity of an accidental spill.

Any spills will be cleaned up by local area personnel using proper protective clothing and cleanup procedures. Cleanup materials will be disposed of as hazardous waste in the local Satellite Station. Personnel will have been trained in the proper cleanup procedures for the hazardous materials involved.

STANDARD START-UP PROCEDURE

1. Start Data Acquisition and Control (DA&C) program on controller computer and set desired values of:
   a. reactor maximum temperature (°C)
   b. reactor pressure (3700 psig)
   c. oxygen flow rate (SLPM),
   e. water flow rate (%; 100% = 2.2 GPH or max nominal flow),
   f. oxygen pressure out of high-pressure regulator (4100 psig)

2. Start oxygen booster by opening drive-air and oxygen supply valves with console switches. (Oxygen pressure should be kept above water pressure). Open oxygen high-pressure shut-off ("injector") valve.

3. Close water emergency vent valve and start water pump with console switches. Set pressure control to automatic with DA&C program panel switch.

4. When oxygen booster pressure is in the deadband (4350-4500 psia) start oxygen flow by setting oxygen flow control to automatic with DA&C program panel switch.

5. When reactor pressure and oxygen flow have reached the desired values and are steady, take a baseline effluent sample by turning on one of the 8 console switches controlling sample valves. Sample valves may be left in the sample position (i.e. "open") for approximately one (1) minute.

6. Start the power ramp by turning on the power supply with the console switch and setting the temperature control to automatic with the DA&C program panel switch.

7. When the maximum reactor temperature goes above approximately 450°C set temperature control to manual and carefully adjust power until the desired temperature is reached and the temperature is steady.

STANDARD SHUTDOWN PROCEDURE

1. Shut off power supply on console and zero power supply demand on DA&C program panel.

2. Close oxygen flow control valve from DA&C program panel. (set to 0% on manual).

3. Turn off oxygen supply and booster drive-air valve switches on console.

4. Switch to pure water feed with console switch.

5. When the reactor temperature has dropped below 100°C, open letdown valve from DA&C program panel. (set to 0% on manual fro an ATC valve; 100% for an ATO valve). Water pump may now be turned off.

6. When reactor pressure has dropped below approximately 1000 psia, open water (emergency) vent valve with console switch.

7. Vent oxygen pressure with console switch. Oxygen system pressure should always be kept above water pressure. After venting, leave vent valve in closed position (solenoid actuated). It is now safe to enter the test cell, but avoid hot reactor outlet area.

8. Shut off air supply from inside test cell.

9. When the maximum reactor temperature is below 100°C, turn off water pumps with console on-off switch.

Flow Schematic for WDU-4

2/2/93

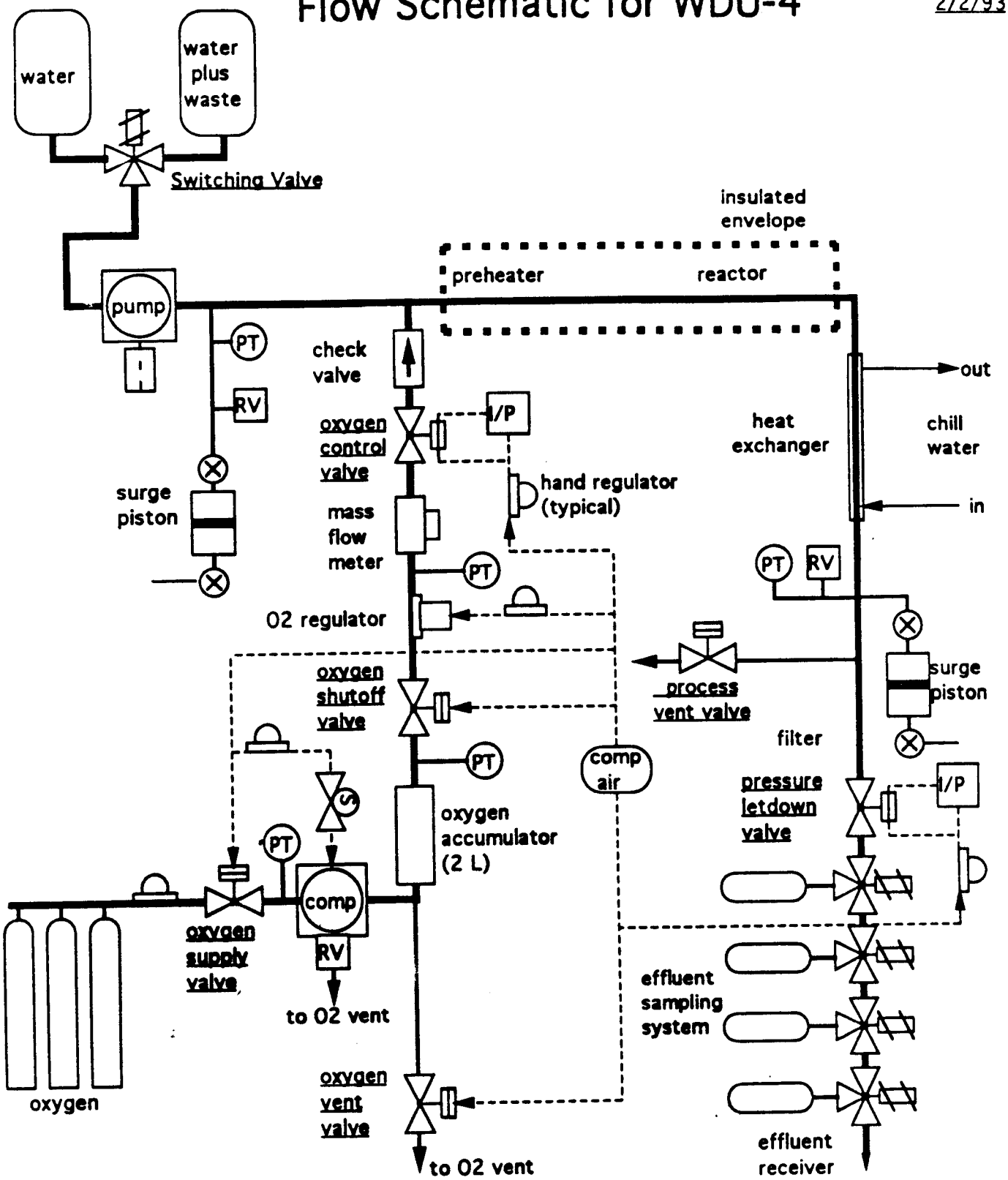

Electrical Schematic for WDU-4

2/2/93

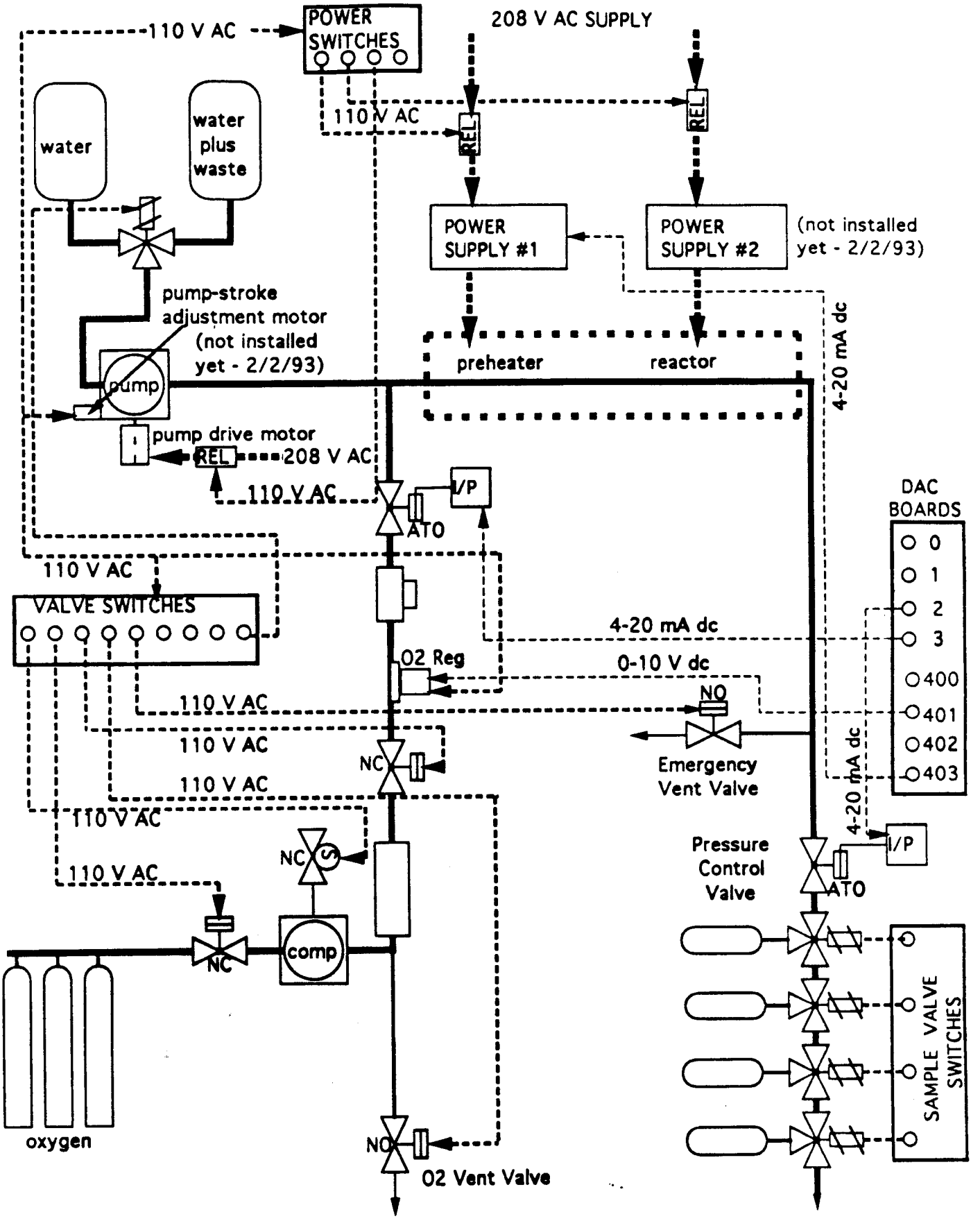

ATTACHMENT 4

SUPPORTING LABORATORY DATA - SUMMARY OF PREVIOUS RESEARCH

Los Alamos National Laboratory

HYDROTHERMAL PROCESSING
RD&D PERMIT

SUPPORTING LABORATORY DATA

EXPERIMENTAL APPROACH

This section describes the reactors used to destroy high energy materials through SCWO processes, and the analytical methods used to measure product species. The specific experimental conditions under which the destruction measurements were performed will be presented in the results and discussion section.

Bench-scale linear flow reactors have been developed to destroy explosives in supercritical water. A schematic of a linear flow reactor is shown in Figure 1. Solutions of oxidizer and/or explosive are introduced at high pressure into the reactor by constant flow, high performance liquid chromatography pumps (LDC Analytical, Constametric 3200). The explosives are typically in water at concentrations less than half of their solubility limit or decomposed in water as the result of prior hydrolysis reactions. Check valves are placed in each line to prevent back-streaming in case of pump failure. Fuel and oxidizer are either premixed before being pumped or are introduced separately. In either case, mixing is completed before reaching the heated section of the reactor. The central core of the reactor is heated to a controlled temperature by six heaters in parallel consisting of hollow brass tubes wrapped with MgO_2-insulated nichrome wire. The temperature is maintained by regulating the current through the heating wire with Omega CN9000 series microprocessor temperature controllers. The temperature of each of these heaters can be varied independently, but for all experiments described in this report the temperature of each heated section was kept the same. The temperature is monitored with six K-type (chromel-nickel), sheathed thermocouples in close proximity to the reactor core. A water-cooled heat exchanger at the exit cools the reacted mixture to room temperature. The cooled effluent is passed through a 7 μm filter for removal of any particulate matter before reducing the pressure to ambient with a let-down valve. Gas and liquid effluents at ambient temperature and pressure then enter a gas-liquid separator.

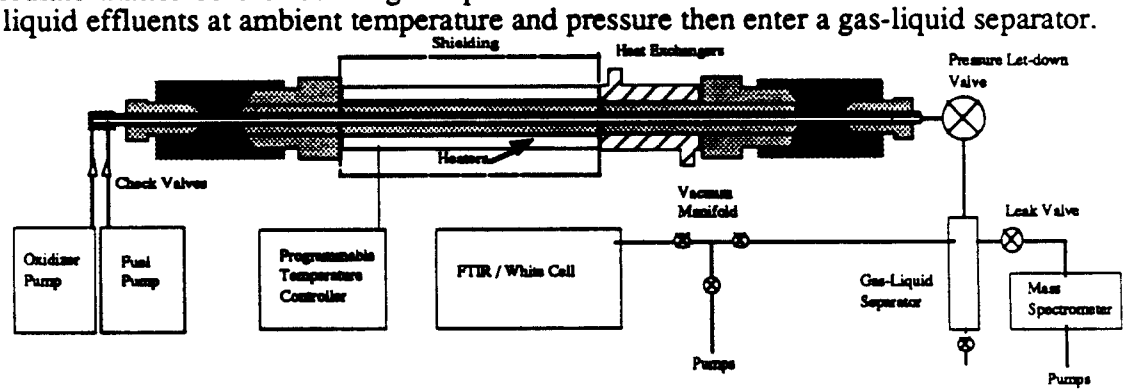

Figure 1. Schematic of linear flow reactor with gas-liquid separator, pumping manifold, and gas analysis instrumentation.

The high temperature portion of one of our reactors is constructed out of C-276, a high-nickel alloy chosen because of its known strength and resistance to corrosion at high temperatures. Even so, under some reaction conditions we have seen considerable corrosion. To overcome this problem, a second reactor was constructed containing a 316 stainless steel sheath with a gold liner. A seal was made with the gold liner by flaring one end of the gold tube and compressing it between tapered high pressure fittings. The liner is open at the exit of the reactor, creating a static supercritical region between the liner and stainless core. The gold liner protects all high temperature sections of the reactor. All "taper seal" high pressure fittings, and most other components obtained from

High Pressure Equipment Co., are manufactured from 316 stainless steel and rated to a minimum of 4080 atm. The C-276 reactor core is 64 inches long by 0.083 in. inside diameter (id), and the gold-lined stainless steel reactor is 55 in. x 0.103 in. These dimensions provide a heated volume of 5.7 ml and 7.4 ml, respectively. Using an empirical equation of state for supercritical water[5] we estimate a residence time of 5-150 seconds, depending on flow rate (typically 1-8 grams/min) and temperature (400-600 °C) at a pressure of 340 atm.

We have used a variety of analytical approaches in order to quantify residual energetics and products of reaction in the aqueous and gaseous reactor effluents. The gaseous effluent is primarily analyzed using Fourier-Transform Infrared (FTIR) spectrometry. A procedure was developed to quantify the concentration of CO_2 and N_2O (the primary gas phase products) produced using a 1 m path length cell. Calibration curves for CO_2 and N_2O were obtained by measuring the fraction of infrared light absorbed by a series of known concentrations of CO_2 or N_2O in the range expected to be produced in SCWO reactions. The dependence on concentration of the integrated absorbance of each of the two major CO_2 IR absorptions was nonlinear, exhibiting distinctive saturation behavior over the range of pressures (concentrations) from 0.1 to 10 torr, a consequence of the narrow linewidths of the ro-vibrational lines and the limited (0.5 cm^{-1}) resolution of the FTIR. The resulting calibration data were fitted to a saturation function, $y=a(1-e^{-bP})+cP$ where P is the partial pressure of the absorbing gas. This technique enabled us to measure the gas pressure with a relative standard deviation of 3%. A UTI quadrupole mass spectrometer is also used for detection of H_2, N_2, and O_2. Gaseous products are sampled on-line through a leak valve. Calibration of this technique has so far proved difficult due to constantly changing backgrounds.

Analyses performed on the liquid effluent included metals, total organic carbon (TOC), total inorganic carbon (TIC), inorganic anions and the starting material. Metals (Cr, Ni, Fe, Mo and Au) are analyzed on a Perkin-Elmer inductively coupled plasma spectrophotometer (ICP) using indium as an internal standard. Total organic carbon (TOC) and total inorganic carbon (TIC) are analyzed using a Rosemount Dohrmann Model DC-190 Carbon Analyzer. Calibrations are performed with each set of samples using different concentrations of standardized potassium acid phthalate solution. Inorganic anions are analyzed with a Dionex 4500i Series Ion Chromatograph using a Dionex IonPac AS4A column with an eluent consisting of 1.5 mM $NaHCO_3$ and 2.2 mM Na_2CO_3. In most cases conductivity detection is used, but a UV/Visible detector set at 215 nm is used for low levels of nitrate and nitrite. Trace amounts of TNT, PETN, HMX, NQ, and RDX are analyzed by reverse-phase liquid chromatography on the Dionex 4500i, using a Waters 490E Programmable Multiwavelength Detector that allows for simultaneous, multiwavelength detection. All these compounds are analyzed using a 150 mm x 2.1 mm id C8 narrow-bore column that is slightly heated for temperature stability.

SCWO REACTIONS OF ENERGETICS BELOW SOLUBILITY LIMITS.

Much of our effort has focused on reactions of solutions having concentrations less than half of their room temperature solubilities. The destruction efficiencies for the SCWO of three explosive compounds, HMX, RDX and TNT are given in Table I. These reactions were run at high temperatures (near 600 °C) and with a large excess of oxidant.

The initial concentrations of the explosives were kept low to prevent precipitation and accumulation of explosive material in the feed lines leading to the reactor. Hydrogen

TABLE I. Destruction Efficiencies for Energetics Below Water Solubility Limits[a]

Substrate	HMX	RDX	TNT
Initial conc. (ppm)	2.6	35.2	65.5
Destruction efficiency	>0.9900	>0.9992	>0.9998

[a]Conditions: 600 °C, 370 atm; excess H_2O_2; 11 s residence time; gold-lined reactor.

peroxide was used as the oxidizer and was mixed with the feedstock containing explosives before the fluids were heated. In all cases the oxidizer was in 30-fold excess of the stoichiometry required to convert the explosive to CO_2, H_2O and N_2. The experimental conditions for each of these explosives were nearly identical, with pressures of 370 atm, reactor temperatures of 600 °C and residence times of 11 seconds. The reactions were primarily run in the chemically inert gold-lined reactor to minimize the heterogeneous chemistry that might occur at the reactor walls. No significant difference in DREs and product formation was observed for reactions of TNT, HMX, and RDX in the C-276 and the gold-lined reactors. We conclude from these observations that reactions with the C-276 and stainless 316 walls must not be significant for these energetic materials. For these "extreme" conditions, the aqueous effluent contained no detectable amounts of explosives. The detection limit of the HPLC/uv-vis analysis ranges from 20 to 50 parts per billion (ppb) depending on the compound. Consequently the measured destruction efficiencies represent lower limits defined by the low starting concentrations and the detection limits.

Gaseous and liquid effluents from these reactions have been analyzed to determine the products of reaction. Typical FTIR spectra for TNT, and RDX are shown in Figure 2. It is clear from these analyses that the extreme conditions of high temperature and excess oxidant produce only CO_2 and N_2O in the gaseous effluent. Other possible products such

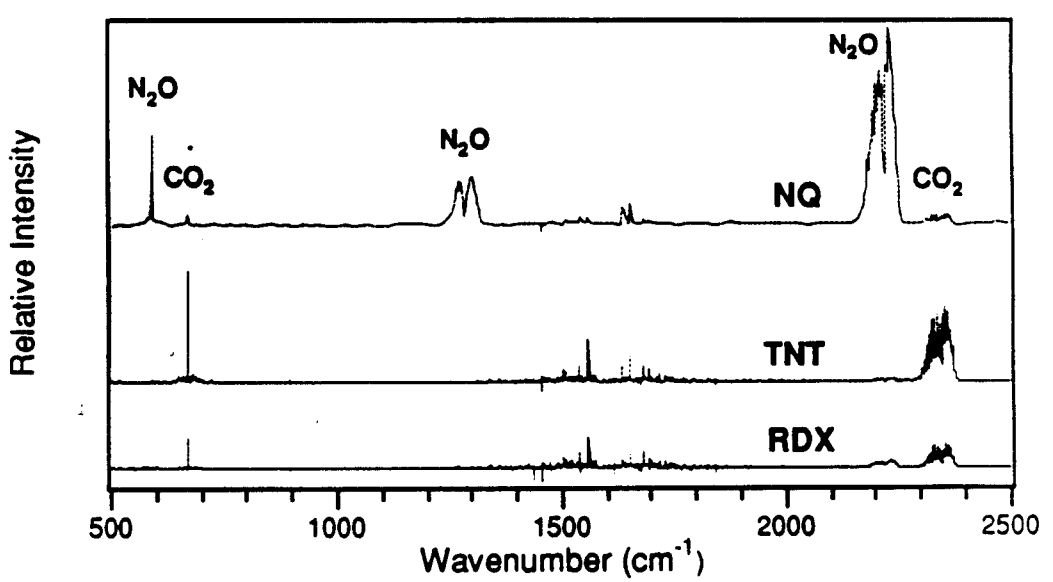

Figure 2. FTIR spectra of the reaction products of SCWO of TNT, NQ and RDX.

as CO, CH_4, NO and NO_2 are not detected and are therefore below parts per million (ppm) levels (generally below 0.1% of the starting C and N). Additional products that are likely to be produced in these reactions but which cannot be quantified by FTIR include N_2, O_2 (no infrared active vibrations) and H_2O (swamped by large water background absorption).

The reactor effluents have been analyzed for carbon content and the results are summarized in Table II. The final two columns list (as a percentage of the initial carbon) the C that is observed in the aqueous effluent (as organic and inorganic C) and as CO_2 in the gaseous effluent. For HMX, both the TIC and TOC quantities are below detection limits (0.1 ppm). Detectable quantities of organic carbon were found for RDX, TNT and NQ. Since in all of these cases the substrate is destroyed to levels well below the detection limits of the HPLC analysis (10 ppb) and since no volatile organics were observed in the FTIR analyses, the observed organics must be nonvolatile reaction products such as formate or acetate. For the TNT reactions, greater than 98% of the C was detected as CO_2, with the remainder detected as involatile organics in solution.

TABLE II. Analysis of Carbon Products in Effluent Streams for SCWO of Energetics[a]

Substrate	$[C]_i$ [b](ppm)	TIC (ppm)[c]	TOC (ppm)[c]	% $C_{aqueous}$	% C_{CO2}
HMX	2	d	d	d	87
TNT	24	0.2	1.7	8	98
RDX	5.7	<0.1	<0.1	<4	98

[a]Conditions: 600 °C, 370 atm; excess H_2O_2; 11 s residence time; gold-lined reactor; [b]Initial carbon concentration.; [c]TIC, Total inorganic carbon, TOC, Total organic carbon; [d]Since starting concentrations of PETN and HMX are ~2-3ppm, the analyses for TOC and TIC are below detection limits.

TABLE III. Analysis of Nitrogen Products in Effluent Streams for SCWO of Energetics[a]

Substrate	HMX	RDX	TNT
% NO_3^-	12.4	10.1	36.6
% NO_2^-	5.3	14.1	28.5
% N_2O	b	b	4.0

[a]Conditions: 600 °C, 370 atm; excess H_2O_2; 11 s residence time; gold-lined reactor. [b]Less than 0.5%.

Reactor effluents have also been analyzed for nitrogen content and the results are summarized in Table III. For HMX, and RDX, some N_2O was observed in the FTIR spectra, but quantitative analysis showed the amounts to be less than 0.5% of the initial N. With excess oxidant, significant amounts of nitrite and nitrate were observed for all substrates. Trinitrotoluene (TNT) produced the greatest fraction (65%) of NO_x^-. In all cases examined so far, a large fraction of the initial nitrogen remains undetected by our current analytical techniques. We have detected N_2 by mass spectrometry, but not yet quantitatively.

Effects of temperature and oxidant concentration on SCWO of TNT. An extensive set of experiments has been conducted on TNT to determine the SCWO chemistry as a function of reaction temperature and oxidant concentration. In all cases, the TNT was destroyed to below detection limits of ~10 ppb, yielding a destruction efficiency of greater than 99.98%. The product analysis is summarized in Table IV. The NO_2^- and NO_3^- values are listed as a percentage of the starting nitrogen concentration. Similarly, the TIC and TOC values are listed as a percentage of the starting carbon concentration. The oxidant

TABLE IV: TNT SCWO products as a function of temperature and H_2O_2 concentration

Temp (°C)	TNT:H_2O_2 equiv. ratio[a]	%NO_2^-	%NO_3^-	Total %NO_x^-	%TIC	%TOC	%Total C
400	1:20	11	30	41	4	18	22
500	1:0	18	0	18	14	28	42
500	1:20	26	51	77	4	11	15
600	1:0	18	0	18	12	34	46
600	1:1	11	6	17	15	0	15
600	1:2	6	6	12	14	0	14
600	1:5	33	38	71	9	0	9
600	1:20	25	49	74	4	0	4

[a]Molar concentration ratio divided by stoichiometric ratio (=10.5).

concentration is expressed as the equivalence ratio, given by the ratio of the stoichiometric concentration to the actual concentration, where the former is defined by the following equation:

$$C_7H_5N_3O_6 + 10.5\ H_2O_2 \rightarrow 7\ CO_2 + 1.5\ N_2 + 13\ H_2O.$$

The most efficient conversion of TNT to CO_2, as determined by FTIR analysis of the gas production and by TIC and TOC analysis of the aqueous effluent, occurs at the highest temperature (600 °C) and the highest H_2O_2 concentration. These conditions also yielded the highest concentrations of NO_2^- and NO_3^-. This fraction is highly variable, however, depending on the temperature and oxidant concentration. The dependence of NO_x^- formation on oxidant concentration for TNT is illustrated in Figure 3. The fraction of N that occurs as NO_x^- is less than 10% with stoichiometric oxidant concentration. In general, at lower temperatures and lower ratios of H_2O_2:TNT, less NO_2^- and NO_3^- are observed. While these conditions do not compromise the destruction efficiency of TNT, they tend to leave more carbon in the aqueous effluent. Much of this carbon appears as carbonate, however, which can be removed by lowering the pH. The best conditions for the destruction of TNT and any organic byproducts with minimum NO_2^- and NO_3^- formation appear to be 600 °C and a stoichiometric ratio of H_2O_2:TNT.

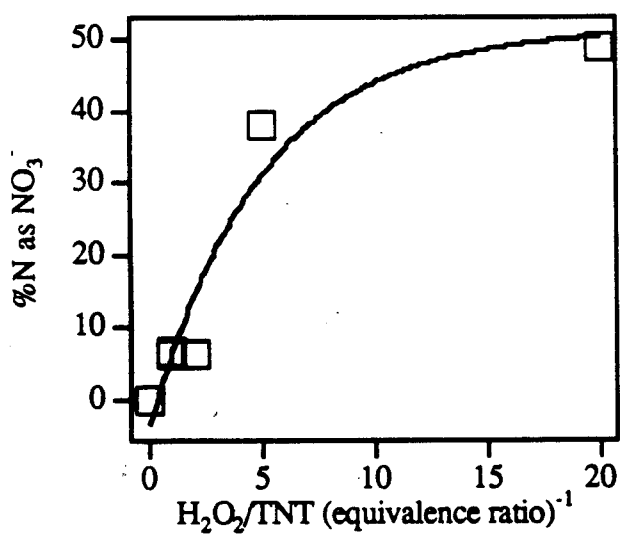

Figure 3. Dependence of nitrate formation on the ratio of H_2O_2:TNT.

Base Hydrolysis.

A promising approach appears to be pre-treatment of the energetic materials to increase their solubility in water.

Our effort has focused on degradation of the explosive via base-catalyzed hydrolysis at elevated temperatures. These reactions produce water-soluble products that are further processed in SCW to achieve complete destruction of the energetic material and its hydrolysis by-products. This approach has been successfully demonstrated for NQ, TNT, HMX and RDX. Because solutions at high concentration may be processed, very high destruction efficiencies of the starting materials have been measured. In addition, the final products of the combined hydrolysis/SCWO process are very similar to those obtained with SCWO alone.

Results for the combined hydrolysis and SCWO of TNT and HMX are summarized in Tables VII - IX. It is clear from these results that while the hydrolysis reactions effectively destroy most of the starting explosive, a substantial fraction of the carbon remains in solution as organic material. While much of the N is not accounted for following hydrolysis, qualitative analyses of the off-gases indicate formation of only two N-containing products, N_2 and N_2O. The rest occurs primarily as nitrite. The hydrolyzed solutions were processed in supercritical water using the following conditions: gold-lined reactor, 600 °C, 11 s residence time, 350 atm and excess H_2O_2. Under these conditions, the organic carbon is completely converted to CO_2. Approximately 1% of the starting N is converted to nitrate, corresponding to tens of ppm in the effluent. Future experiments will focus on optimizing the SCWO step to minimize nitrate production.

Table VII. Hydrolysis/SCWO of TNT

Substrate	Initial Concentration ppm	Hydrolysis ppm (%†)	SCWO ppm (%†)
TNT	14000	<2 (<0.02)	<0.05 (<0.0005)
TOC	5181	3380 (65)	<0.2 (<0.004)
TIC	0	1080 (21)	10 (0.2)
N as NO_2^-	0	784 (30)	8.5 (0.3)
N as NO_3^-	0	1 (0.04)	20 (0.8)

†Percent of initial substrate concentration.

Table VIII. Hydrolysis/SCWO of HMX

Substrate	Initial Concentration ppm	Hydrolysis ppm (%†)	SCWO ppm (%†)
HMX	7000	22.5 (0.3)	<0.05 (<0.001)
TOC	1123	1026 (91)	0.7 (0.06)
TIC	0	<0.5 (<0.05)	0.2 (0.02)
N as NO_2^-	0	184 (7)	0.09 (0.03)
N as NO_3^-	0	80 (3)	30 (1.1)

†Percent of initial substrate concentration.

Table IX. Hydrolysis/SCWO of 9404

Substrate	Initial Concentration ppm HMX	Hydrolysis ppm	SCWO ppm
HMX	58966	<.8	<0.02
TOC	10298	1026	<1
TIC	0	265	1284
N as NO_2^-	0	17500	0.2
N as NO_3^-	0	692	0.2

The organic composition of the hydrolysis effluent of 9404 was analyzed and shown to be 75% formate ($HCOO^-$) and 25% acetate (CH_3COO^-).

ATTACHMENT 5

INSPECTION RECORD FORM (IRF)

Los Alamos National Laboratory

HYDROTHERMAL PROCESSING
RD&D PERMIT

HAZARDOUS AND MIXED WASTE FACILITY INSPECTION RECORD FORM

[1] FACILITY	[2] ☐ <90 DAY, GENERATOR STORAGE ☐ TREATMENT, STORAGE, DISPOSAL	[3] START DATE	[4] END DATE

[5] ☐ Containers ☐ Landfill ☐ Surface Impoundment ☐ Waste Pile ☐ Thermal Treatment ☐ Chem/Phys/Bio. Treat.
☐ Incinerator ☐ Misc. Unit ☐ Tank ☐ UST ☐ Land Treatment ☐ Underground Inj.

PART I - Enter condition of item inspected (OK or AR*) in column for day inspected.

ITEM	INSPECTED FOR	SUN	MON	TUE	WED	THU	FRI	SAT
[6] NO USE	CHECK IF NO WASTE IS PRESENT							
[7] (UN)LOADING AREA TANKS/CONTAINERS	SPILLS AND DETERIORATION							
[8] COMMUNICATION EQUIPMENT (PHONE/RADIO/ALARMS)	PROPERLY FUNCTIONING							
[9] TANKS (ALL ABOVE GROUND PORTIONS) MONITORING DATA	DISCHARGE CONTROLS CONDITION, LEAKS, LEVEL (6" FREEBOARD), CORROSION							
[10] SURFACE IMPOUNDMENTS AND CONTAINMENT	FREEBOARD (2 ft) SUDDEN DROPS IN LEVEL							
[11] PORTA BERM	LEAKS CONDITION							
[12] EYE WASH SAFETY SHOWERS	LEAKS, FUNCTIONING							
[13] STRUCTURAL INTEGRITY OF CONTAINERS/TANKS, VALVES, PIPES, AND FLANGES	DETERIORATION AND LEAKS, CORROSION, DAMAGE							
[14] COVER/LID OF CONTAINERS	CLOSED AND SECURED							
[15] WARNING SIGNS	POSTED & READABLE (BILINGUAL)							
[16] LABELS	"HAZARDOUS WASTE" PRESENT ON ALL CONTAINERS/TANKS							
[17] ACCUMULATION START DATE (<90 DAY STORAGE)	PRESENT ON ALL CONTAINERS, TANKS, NONE EXCEED 90 DAYS							
[18] RUN ON/OFF CONTROL (AREA L, G, H, P) LANDFILLS, DETONATION PADS	INTEGRITY, EROSION PONDING							
[19] COVER INTEGRITY (AREA L, G, H, P) LANDFILLS	EROSION, SUBSIDENCE WATER INTRUSION							
[20] SECURITY	CONDITION, FENCE/GATES/LOCKS							
[21] SITE LIGHTING	FUNCTIONS PROPERLY							

ITEM	INSPECTED FOR	SUN	MON	TUE	WED	THU	FRI	SAT
22 CONTAINMENT STRUCTURES	INTEGRITY, STANDING WATER VEGETATION, EROSION							
23 MANAGEMENT OF CONTAINERS	SEGREGATED ACCORDING TO COMPATIBILITY, 2 FT AISLE SPACE							
24 HOSE BIBS, WATER SUPPLY	LEAKS, FUNCTIONING							
25 STORAGE SHED (AREA L)	FLOOR DAMAGE, LIQUID							
26 ROAD/WORK SURFACES	CRACKS/POTHOLES							
27 WIND SOCK	DAMAGE, FUNCTIONING							
28 SHAFT COVER AND RAIL	PRESENT, DAMAGE							
29 PALLETS	INTEGRITY, DAMAGE							
30 TREATMENT TANKS	PROPER OPERATION, LEAKS							
31 REFRIGERATOR	DAMAGED CONTAINERS							
32 SPILL CONTROL, FIRE, AND EMERGENCY EQUIPMENT	PRESENT, AND IN GOOD WORKING ORDER							
33 INCINERATOR EMERGENCY WASTE FEED CUTOFF/ALARMS	PROPER OPERATING CONDITION OF ALL SHUTDOWN CONTROLS							
34 INCINERATOR PUMPS VALVES, PIPES. MONITORING CONTROLS	LEAKS/SPILLS/TAMPERING OPERATING WITHIN SPECS.							
35 PRESSURE VESSELS (S-SITE)	DETERIORATION AND SAND CONDITION							
36 OIL BURN PANS (S-SITE)	DETERIORATION & LEAKS							
37 HE BURN PADS (S-SITE)	DETERIORATION VEGETATION, SAND COND., EROSION							
38 RADIATION SAFETY	SIGNS, MONITORING ($\alpha\ \beta\ \gamma\ {}^3H$)							
39 DATE	DATE OF INSPECTION							
40 TIME	TIME OF INSPECTION							
41 INSPECTOR	INITIALS OF INSPECTOR							

PART II - For any AR (Action Required) in PART I above, describe below: action required, action taken, date of action. Attach additional sheets if necessary.

42 INSPECTOR	43 GROUP	44 DATE	45 TIME

Part I

1. FACILITY: Location information including Technical Area (TA), building, and room if applicable. Other location descriptors may be necessary. (e.g., TA-59-3-114 or TA-59-1-S. Dock)

2. <90 Day, Generator Storage should be checked if this location is intended for operation in accordance with generator requirements for storage of hazardous waste for less than 90 days.

   Treatment, Storage, Disposal should be checked if this location is listed in LANL's Hazardous Waste Facility Permit or Part A Application as a permitted or interim status TSD operation.

3. START DATE: The date of the first inspection for the week on that inspection sheet. (Usually the first working day of the week)

4. END DATE: The date of the last inspection for the week on that inspection sheet. (Usually the last working day of the week, however, if handling of hazardous waste occurs during the weekend inspections must be conducted.)

5. Check the appropriate box for the type of operation. Several boxes may be checked if necessary for those locations where inspections are combined on a single sheet. You must have prior approval from EM-8 to combine inspections for more than one unit.

6. NO USE: May be checked if the unit did not store, treat, dispose, or otherwise handle hazardous waste for the day/week in question. The individual responsible for the inspection must then only complete boxes 39, 40, 41 for that day/week. If any hazardous waste is subsequently placed at the site for any reason, a full inspection must be performed immediately, and every working day thereafter until all waste is properly disposed of.

7. Loading and unloading areas must be inspected daily when in use for signs of damage or deterioration that may lead to an accident or spill. This includes asphalt pads, and areas where containers or tanks are handled or contents thereof are transferred.

8. Communication equipment: Includes all telephones, two-way radios, and alarms for the area being inspected. Consult with EM-8 to determine what equipment is necessary at any particular location.

9. For tanks systems used for treatment or storage of hazardous waste, all above ground portions of the tank system, including any and all ancillary plumbing, must be inspected daily for signs of leaking, corrosion, deterioration, or improper operation. Tanks must be operated with a minimum freeboard of 6 inches. If the tank system includes discharge controls, overtopping controls, tank level alarms, or other monitoring equipment including leak detection equipment, all controls and relevant data must be checked to ensure they are operating properly and that operation is within design specifications for the system.

10. Surface impoundments must be operated with a minimum of 24 inches (60 cm) of freeboard from the top of the dike or berm to the surface of the waste therein. Inspectors must look for signs of leaks, deterioration, and erosion of dikes and berms, and any associated plumbing or valves. These could include dying vegetation, gullies and sudden changes in level.

11. For those locations where inflatable "Porta-Berms" are used as secondary containment for tanks and containers of hazardous waste, inspectors must ensure that they are adequately inflated. Inspectors must also check for the presence of liquids in the containment unit which could indicate leaks or spills of hazardous waste. All monitoring and leak detection systems must also be checked.

12. Where required, eye-wash and safety showers must be inspected to ensure proper operating condition. Outside locations must be checked for freezing.

13. All containers and tanks must be checked for structural integrity, leaks, corrosion, or damage. This item includes checking condition of all construction materials, fixtures, seams, and auxiliary equipment. See 9 above.

14. All tanks and containers used for treating or storing hazardous waste must have the cover or lid securely in place. Containers are not considered to be closed unless the lid/cover is fastened in the manner the manufacturer originally intended.

15. Required signs must be readable and prominently posted. TSD facilities and <90 day storage areas must be equipped with bilingual (english/spanish) signs with the legend "DANGER UNAUTHORIZED PERSONNEL KEEP OUT." TSDs must be identified with signs that read "HAZARDOUS WASTE STORAGE AREA." <90 day storage areas must be identified with a sign with the legend "<90 DAY HAZARDOUS WASTE STORAGE AREA."

16. All containers and tanks must be labeled with the words "HAZARDOUS WASTE" and with other words that identify the contents. Mixed waste must also be labeled as "RADIOACTIVE."

17. All containers and tanks of hazardous waste in TSDs or <90 day storage areas must be marked with the accumulation start date. At TSDs, containers without dates must be dated when they arrive at the facility. At <90 day storage areas, containers must be marked with the accumulation start date at the time the container first receives any waste. For <90 day storage areas, no containers may exceed 90 days from accumulation start date to the time they are delivered to a permitted treatment, storage, or disposal unit. Transportation is by EM-7 or its representatives only.

18. Landfills and detonation pads must have run-on and run-off controls inspected wherever present. Leachate collection systems, where present, must also be inspected. Items to be inspected for are proper operating condition, damage, erosion, contaminant migration, ponding, etc. Detonation pads must be inspected for unburned or undetonated explosives, ordnance and debris.

19. Landfill covers must be inspected at least weekly and after storms for evidence of erosion, subsidence, and water intrusion.

20. Site security must be verified. Items such as fences, gates, locks, etc. should be checked for proper condition and adequacy.

21. Site lighting must be adequate to prevent accidents related to hazardous waste operations and for any other night operations that may take place within the boundaries of the hazardous waste unit.

22. Secondary containment structures for hazardous waste operations must be inspected to verify proper operating condition and to ensure adequate capacity. Structures must also be inspected for the presence of standing water or hazardous waste. For incinerators and certain operations at TA-55, secondary containment includes inspections of gloves and gloveboxes, hoods, and ventilation systems where necessary.

23. All hazardous waste containers holding materials that may be incompatible with any other materials at that location must be separated from those materials by dikes, berms, or other physical barriers to prevent a possible reaction. All containers of hazardous waste must be stored in a manner that ensures a minimum of 2

feet of aisle space between containers. Drums containing free liquids or those holding hazardous waste (excluding mixed wastes) may not be stacked over two high.

24. TSD facilities must have water at adequate volume and pressure for fire protection available. Hose bibs should be inspected for proper operating condition and adequate pressure. Outside water supplies must be checked for freezing.

25. The storage shed at Area-L must be inspected for damage, free liquids that might indicate a leak, and chemical compatibility of materials stored therein.

26. Road and work surfaces, process floors, or other work surfaces at TSDs must be inspected for damage or erosion that could lead to a spill or accident, and for adequate secondary containment.

27. Wind socks, where required, at TSDs must be inspected to ensure that they are present and in proper operating condition.

28. Disposal shafts and shafts used for retrievable storage should have their covers securely in place and guard rails must be installed and in good condition.

29. Hazardous waste containers at TSDs and <90 day storage areas must be stored on pallets if they are stored outside without a roof.

30. Hazardous waste treatment tanks must be operated within design specifications and in accordance with SOPs and Work Plans. Tanks must be inspected for leaks or damage prior to operation.

31. Refrigerators used for storing hazardous waste, or samples thereof, must be inspected for proper operating condition and leaking or damaged containers.

32. Hazardous waste TSDs and <90 day storage areas must have adequate fire and spill control equipment for the types and volumes of waste present. Equipment must be present, in good working order, and appropriate for the material in question.

33. Incinerator waste feed cutoffs, emergency shutdown controls, and associated alarms or warning systems must be inspected for proper operating condition.

34. Incinerators, ancillary plumbing and equipment, and all monitoring controls must be inspected to ensure that they are in proper operating condition, and are being

operated within design specifications. Inspectors must also look for evidence of leaks, corrosion, spills, or tampering.

35. Pressure vessels must be inspected for signs of deterioration or damage. Condition of the sand and loading must also be checked to ensure adequacy.

36. Oil burn pans must be inspected for deterioration, damage, or leaks. Inspectors must also inspect for unburned explosives and debris.

37. HE burn pads must be inspected for deterioration, damage, leaks, or vegetation that could catch fire. Condition of the sand must also be checked. Inspectors must also inspect for unburned explosives and debris.

38. Radioactive materials must be properly placarded, labeled, and stored within controlled areas in accordance with AR 3-7. Containers should be monitored/swiped for outside contamination if suspected and all leaks or spills must be monitored to ensure adequate cleanup.

39. Inspectors will record the date of the current inspection.

40. Inspectors will record the time of the current inspection.

41. Inspectors will initial each daily inspection.

Part II

Inspectors must explain in detail, any deficiency noted above. Items to be included are: Type of problem, any action taken, and the date/time of the action. Additional sheets may be attached as necessary.

42. Signature of individual performing inspection.

43. Organization responsible for this location.

44. Date record was signed and completed.

45. Time record was signed and completed.

ATTACHMENT 6

CONTINGENCY PLAN

Los Alamos National Laboratory

HYDROTHERMAL PROCESSING
RD&D PERMIT

ATTACHMENT 6

CONTINGENCY PLAN

HYDROTHERMAL PROCESSING UNIT

RD&D PERMIT

Los Alamos National Laboratory
Environmental Protection Group
Los Alamos, NM 87545

March 1993

ATTACHMENT 6

CONTINGENCY PLAN

HYDROTHERMAL PROCESSING UNIT

RD&D PERMIT

Los Alamos National Laboratory
Environmental Protection Group
Los Alamos, NM 87545

March 1993

LIST OF ACRONYMS

ADO	Associate Director of Operations
CAS	Central Alarm Station
CFR	Code of Federal Regulations
DOE	U.S. Department of Energy
DOT	U.S. Department of Transportation
EM	LANL Environmental Management Division
EMO	Emergency Management Office
EOC	Emergency Operations Center
EPA	U.S. Environmental Protection Agency
ERC	Emergency Response Coordinator
ERP	LANL Emergency Response Plan
HAZMAT Team	Hazardous Materials Response Team
HE	High Explosive
HS	LANL Health and Safety Division
HWMR	State of New Mexico Hazardous Waste Management Regulations
ICG	Incident Control Group
JCI	Johnson Controls World Services, Inc.
LAAO	Los Alamos Area Office
LAFD	Los Alamos Fire Department
LAMC	Los Alamos Medical Center
LANL	Los Alamos National Laboratory
LAPD	Los Alamos Police Department
M	Dynamic Testing Division
MAT	Materials Management Division
NAWAS	National Warning System
NMED	New Mexico Environment Department
NMT	Nuclear Materials Technology
OSHA	Occupational Safety and Health Administration
PA	Public Address
PTLA	Protection Technology Los Alamos
RCRA	Resource Conservation and Recovery Act
REA	Radiological Emergency Assistance
SOP	Standard Operating Procedure
TA	Technical Area
TRU	Transuranic
TSDF	Treatment, Storage, and Disposal Facility
WX	Design Engineering Division

CONTINGENCY PLAN

HYDROTHERMAL PROCESSING UNIT

RD&D PERMIT

1.0 INTRODUCTION

This document presents contingency measures for RD&D units at Los Alamos National Laboratory (LANL). This document is consistent with the LANL Emergency Response Plan (ERP), prepared by the Laboratory's Emergency Management Office (EMO). The ERP incorporates emergency planning and preparedness strategies from Department of Energy (DOE) Order 5500.3A, "Emergency Planning and Preparedness for Operational Emergencies." Although it is not anticipated that large scale emergencies will occur at the RD&D unit due to the small quantities of waste material at hand, a detailed description of emergency response capabilities and procedures is provided here. The provisions of this plan will, be carried out immediately whenever there is a fire, explosion, or release of hazardous waste at the RD&D unit that could threaten human health or the environment.

1.1 Site Description

LANL and the residential communities of Los Alamos and White Rock are located in north central New Mexico on the Pajarito Plateau, situated west of the Rio Grande on the eastern slopes of the Jemez Mountains. The LANL facility covers approximately 111 square kilometers (27,500 acres) in and adjacent to Los Alamos County, and includes 34 active Technical Areas (TAs).

The principal mission of LANL is the application of science and technology to solve national problems including weapons development, energy supply, and conservation programs, while basis scientific research complements and strengthens its fundamental technical capabilities. LANL is owned by the DOE, and co-operated by DOE and the University of California.

1.2 Wastes Tested in RD&D Unit

Wastes that will be managed in the RD&D treatment unit are described below. Containers of hazardous wastes will be placed in secondary containment or surrounded by absorbent berms to minimize hazards from leakage.

1. Machining wastewater contaminated with trace levels of PBX 9502, PBX 9501, PBX 9404, TNT, RDX, HMX, and Calcitol (a mixture of 60% TNT and 40% calcium carbonate). This waste stream will be a dilute aqueous waste containing explosive compounds at levels up to the solubility limits of the particular compounds. The

maximum possible quantity of each explosive in this waste stream is: PBX 9502, 5.2 parts per million (ppm) by weight; PBX 9501, 5.2 ppm; PBX 9404, 5.2 ppm; TNT, 131 ppm; RDX, 70.4 ppm; HMX, 5.2 ppm; and Calcitol, 131 ppm. Not all these compounds will be present in any single sample. Single samples will typically have a total Chemical Oxygen Demand (COD) below 150 ppm.

2. Wastewater from plastic explosives operations that may contain organic solvents and high explosives mixed with water. The level of explosives will be the additive solubility of the explosives in water (as described above for waste stream #1) and the solubility of the explosives in the particular organic solvent. Typically, the organic solvent will be one of the following compounds at a concentration of 2-5% by weight: isopropyl alcohol; ethyl acetate, or methyl ethyl ketone.

3. Base hydrolysis aqueous residues containing organic chemical residues up to 10% by weight in water. Waste coolant water containing explosives particulates will be pretreated using base (i.e, sodium hydroxide) hydrolysis by the Fabrication and Assembly Group (WX-3) before RD&D treatment. This base hydrolysis pretreatment converts both the dissolved and particulate explosives to organic chemical residues (primarily formates and acetates) that are no longer considered to be energetic materials and that have enhanced solubility in water.

2.0 EMERGENCY RESPONSE RESOURCES

The primary resources for management of emergency incidents at LANL reside within the Emergency Management Office (EMO), which is part of the Associate Director of Operations (ADO) Office. During an emergency situation, line management (i.e., the group leader of the affected area) works with the designated Emergency Manager from the EMO who assumes the primary responsibility for managing emergency response operations.

Outside of LANL, contracted services and other agencies are also available for assistance during emergencies. These include the contracted services of Protection Technology Los Alamos (PTLA) (security) and Johnson Controls World Services, Inc. (maintenance), the Los Alamos Fire Department and Police Department, and the Los Alamos Medical Center.

All response groups and agencies called upon during emergencies are coordinated by the designated Emergency Manager. The emergency notification procedure is illustrated on Figure 1. The responsibilities and/or assistance available form the response groups/agencies are listed in Table 1 and discussed briefly in the following sections.

2.1 Emergency Management Office

The Director of LANL has delegated the authority and responsibility for administering and implementing the Laboratory's emergency management program to the ADO. The EMO is included within the ADO office. The EMO coordinates and issues the Laboratory's Emergency Response Plan and provides response coordination for emergencies. The EMO also provides a 24-hour Emergency Manager to respond to emergencies, and an Emergency Response Coordinator (ERC) to coordinate Health and Safety and Environmental Management personnel and resources. Additionally, the EMO maintains the Emergency Operation Center (EOC) in a ready condition, should the center be required. The primary EOC is located at TA-59-1; an alternate EOC is located at TA-49-113.

An Emergency Manager and an ERC will respond to emergency incidents involving the release of waste to the environment, including spills, fires, or explosions. The Emergency Manager will initially assess the possible hazards to human health or the environment, and use whatever response group(s) or emergency equipment needed to control and contain the waste. In the event of an emergency, the Emergency Manager becomes the Incident Commander with full responsibility for all response actions. At the scene of the emergency, an Incident Control Group (ICG) will form which consists of responding emergency personnel who report to the Incident Commander. The ICG works together to take command and control of emergency situations.

EMO personnel designated as Emergency Manager are listed in Table 2. Assignment as the designated Emergency Manager is rotated. The Emergency Manager can be reached by contacting the EMO (667-6211 during working hours, 667-7080 after working hours) or the central Alarm Station (CAS) dispatcher (9-911).

The ERC is called out by and reports to the Incident Commander. In the event of an emergency, the ERC is responsible for coordinating the Hazardous Materials Response (HAZMAT) Team, Radiological Emergency Assistance (REA) Team, and other related Health and Safety and Environmental Management personnel and resources.

2.2 Health and Safety (HS) Division Response Groups

LANL maintains its own response forces within the HS Division to handle emergencies. These response groups include:

- Health Physics Operations (HS-1);
- Occupational Medicine (HS-2);
- Risk Management Support (HS-3);
- Industrial Safety and Hygiene (HS-5); and
- Health Physics Policy and Programs (HS-12).

Any of these groups may respond to an emergency, if requested by the ERC, and are coordinated by the ERC (through their team leader,if applicable) in the ICG.

2.2.1 Health Physics Operations (HS-1)

Radiological incidents that occur at any of the TAs are evaluated by HS-1, Health Physics Operations. HS-1 will provide field personnel to perform radiological monitoring and decontamination under the supervision of Certified Health Physicists.

2.2.2 Occupational Medicine (HS-2)

LANL maintains its own medical facility operated by HS-2, Occupational Medicine. This group provides appropriate medical treatment for occupationally-related illnesses and injuries and monitors employees to assess the effectiveness of health protection programs. HS-2 maintains documented records of the health status of employees and related occupational medicine activities.

Although HS-2 is not involved with on-scene emergency response, they maintain a central medical facility with a fully-equipped emergency room and decontamination facilities at TA-3, SM-409. Additionally, this group staffs three satellite first-aid stations at TA-53, TA-16 (S-Site), and TA-55. The locations of these emergency facilities are shown on Figure 2. Medical staff includes physicians, physician's assistants, registered nurses, x-ray technicians, a physical therapist, a clinical psychologist, assistance counselors, and clinical laboratory technicians.

HS-2 is supported by the Industrial Safety and Hygiene Group's (HS-5) capabilities for exposure and treatment information via telephone access to the National Library of Medicine's TOXLINE and CHEMLINE; the Toxicity Databank files; POISONDEX and TOMESPLUS (Micromedics); and the CC/INFO database files on MSDSs, NIOSH Technical Information Center information, and the Registry of Toxic Effects of Chemical Substances. HS-2 maintains the TOMES system at the central medical facility (SM-409) to assist the clinical staff with timely exposure and treatment information.

2.2.3 Risk Management Support (HS-3)

HS-3, Risk Management Support, is responsible for coordinating and publishing policy and guidance on safety training and operational safety for LANL. Additionally, HS-3 provides guidance and assistance to LANL divisions for safety analysis documents and to LANL groups for facilities analysis.

2.2.4 Industrial Safety and Hygiene (HS-5)

Personnel from HS-5, Industrial Safety and Hygiene, comprise the LANL HAZMAT Team. The HAZMAT Team is responsible for the aggressive mitigation of chemical and hazardous waste

emergencies, including field decontamination of victims and responders. LANL standards require that the HAZMAT Team meet the training criteria for emergency response personnel specified in 29 CFR 1910.120(q)(6)(iii), (iv), and (v). The HAZMAT Team is part of the ICG reporting through the ERC. HS-5 also provides site field testing to determine the nature and extent of chemical contamination, provides information on correct handling of chemicals, makes recommendations on protective clothing and equipment, and provides exposure and treatment information.

2.2.5 Health Physics Policy and Programs (HS-12)

The Radiological Emergency Assistance (REA) Section of the Health Physics Policy and Programs Group (HS-12) provides a wide-range of health and safety support for radiological incidents at LANL. The REA Team coordinates with the ERC to provide radiological assessment and mitigation. This section also provides a contamination-control station at the scene of a radiological incident to process people working in a radiologically-contaminated area, and is capable of performing decontamination of personnel.

2.3 Environmental Management (EM) Division Response Groups

At the scene, the environmental Management groups are coordinated in the ICG by the ERC.

2.3.1 Waste Management (EM-7)

The Waste Management Group (EM-7) is responsible for initial response actions at RCRA TSDFs. This group also provides guidance on proper treatment, storage, and off-site shipment of hazardous waste.

2.3.2 Environmental Protection (EM-8)

The Environmental Protection Group (EM-8) is responsible for regulatory compliance and provides guidance on regulatory requirements to other groups. After an emergency, EM-8 provides field surveys of soil, water, air, and biota to determine environmental effects of exposure. The group provides expertise in hydrogeology and meteorology to establish near-term and long-term environmental effects of emergency conditions.

2.4 Other LANL Response Resources

2.4.1 Nuclear Materials Technology (NMT)

Several personnel from the Nuclear Materials Technology (NMT) Division have been trained in emergency response procedures. In the case of an emergency interrupting operations, these personnel are responsible for monitoring for leaks, pressure buildup, gas generation, or equipment ruptures.

2.5 Contracted Response Groups

Contracted response groups report to the Operations Officer in the ICG or directly to the Incident Commander in the event of a smaller emergency.

2.5.1 Protection Technology Los Alamos (PTLA, Pro Force)

The Pro Force is responsible for LANL security, which is provided by Protection Technology Los Alamos (PTLA) under contract to LANL. During an emergency, the Pro Force activities include maintenance of security, direction of traffic within LANL, and control of access to the emergency scene. The Pro Force maintains the necessary equipment to perform these functions, such as crowd control equipment and patrol cars.

2.5.2 Johnson Controls World Service, Inc. (JCI)

Johnson Controls World Services, Inc. (JCI) provides a maintenance support force under contract to LANL. This support force is under LANL's direction in an emergency. JCI conducts inspections of LANL equipment, maintains equipment, and participates in post-emergency cleanup under the direction of HS-5.

2.6. Outside Response Agencies

Outside response agencies report to the Operations Officer in the ICG. In smaller emergencies, they may report directly to the Incident Commander.

2.6.1 Los Alamos Fire Department

The Los Alamos Fire Department (LAFD) provides fire protection and ambulance coverage for the communities of Los Alamos and White Rock and for LANL. In the case of an emergency within LANL, the Fire Department coordinates fire suppression efforts. LANL requires that Fire Department personnel meet the training criteria of emergency response personnel specified in 29 CFR 1910.120(q)(6)(i) and (ii).

2.6.2 Los Alamos Police Department

In keeping with the principle of handling emergencies internally, the Los Alamos Police Department (LAPD) has only minimal interaction with LANL in an emergency. That interaction is limited to traffic control on DOE roads with public access and to criminal investigations. The limits of interaction are included in a signed agreement.

2.6.3 Los Alamos Medical Center

Those medical cases which cannot be handled at HS-2 will be transferred to the Los Alamos Medical Center (LAMC), where LANL maintains a fully-equipped decontamination room adjacent to the

emergency room. In the event that a case is sent to the hospital, support for the emergency room staff is provided by HS-2 medical personnel, HS-1 Health Physics Operations staff, HS-5 Industrial Safety and Hygiene staff, and HS-12 Health Physics Policy and Programs personnel. This assistance is coordinated through LANL's EMO.

3.0 EMERGENCY EQUIPMENT AND COMMUNICATIONS

Effective emergency response at LANL requires an efficient communication system which will integrate all personnel into the emergency response. The initial phase of an emergency will involve a small number of individuals at the affected area and notification of the designated Emergency Manager.

3.1 Emergency Central Alarm System

The emergency Central Alarm Station (CAS) is located at TA-64-1. This station is manned by Pro Force personnel 24-hours a day and is equipped with telephones, medium- and short-range radios, direct-line telephones, a National Warning System (NAWAS) station, and an emergency power system. The fire alarm board at the control room gives the location of automatic and pull fire alarms.

The emergency central alarm system is activated by:

- Telephone communication (9-911 or 911);
- Automatic fire alarms;
- Manual pull alarms;
- Computer interface (to warn of critical events at selected facilities);
- Break-in security; and
- Radio communications.

Activation of the emergency central alarm system automatically alerts the CAS dispatcher, the Pro Force,and the Los Alamos Fire Department. The required emergency response groups are then notified of the problem by the Emergency Manager, ERC, and/or the CAS dispatcher.

3.2 Maintenance Central Alarm System

The maintenance central alarm system is manned by JCI personnel 24 hours a day. The maintenance alarm system interfaces with computers which monitor sensitive equipment throughout LANL. Activation of an alarm triggers a call-out procedure to alert maintenance personnel and management supervision to correct the malfunction.

Internal communication systems at LANL include:

- Centrex telephone system;
- Medium-range radio nets (30-60 miles);
- Limited-range radio nets (3-10 miles);
- Telephone/radio paging; and
- Two-way hand-held radios.

Off-site communications with Federal, State, County, and other agencies are maintained by the following:

- Centrex telephone system;
- Private telephone lines (if Centrex fails);
- Medium-range radio nets (30-60 miles);
- Limited-range radio nets (3-10 miles);
- Two NAWAS; and
- KRSN radio link (local radio station).

The LANL EOC, located at TA-59-1 and maintained by the EMO, operates radio systems on key LANL and off-site channels. Emergency personnel responding to on-site incidents have the benefit of wide-area radio coverage using the EOC facilities. After hours, the Emergency Manager is responsible for activating whatever support personnel, services, or equipment is needed.

4.0 CONTINGENCY PLAN IMPLEMENTATION

The following section defines the guidelines used to initiate this Contingency Plan and the resulting actions taken.

4.1 Guidelines for Implementation

The decision to implement this Contingency Plan depends upon whether or not an imminent or actual incident involving a release of hazardous waste or hazardous materials to the environment could threaten human health or the environment. The following guidelines shall be used by the Emergency Manager in making the decision whether or not to implement this plan.

This Contingency Plan will be implemented in the following situations:

Spills

- A hazardous waste spill cannot be contained with application of absorbents;
- Precipitation threatens to move spilled material off-site;
- A hazardous waste spill caused the release of flammable materials, creating a fire or explosion hazard;
- A hazardous waste spill results in toxic fumes which threaten human health; or
- A earthquake or other natural disaster threatens containment integrity.

Explosions

- An unplanned explosion involving hazardous waste occurs; or
- An imminent danger exists that an explosion involving hazardous waste could occur.

Fires

- Any fire involving hazardous waste that cannot be controlled with fire extinguishers; or
- Any building, grass, forest, or nonhazardous waste fire that threatens to ignite hazardous material at the RD&D unit.

4.2 Emergency Notification

During working hours, immediately upon discovery of an imminent or actual incident involving hazardous waste at the RD&D unit, line management and the Emergency Management Office will be notified by on-site personnel. During nonworking hours, all incidents involving hazardous waste at the RD&D unit shall be reported to the designated Emergency Manager or the CAS dispatcher. In the case of fire involving hazardous waste at the RD&D unit, notification of these individuals is superseded by the LANL fire alarm system. A fire is reported by dialing 9-911, activation of automatic alarms, or activation of a fire pull box. All fire alarms alert the CAS Dispatcher, the Los Alamos Fire Department, and the PTLA Pro Force.

The first arriving emergency trained person becomes the temporary Incident Commander. Once the Emergency Management Office is notified of the emergency, the designated Emergency Manager shall proceed to the scene and be briefed by the temporary Incident Commander, building/area personnel, and other emergency units/teams. The Emergency Manager may then assume the position

of Incident Commander. The Incident Commander may recommend activation of the EOC to the ADO. Upon concurrence of the ADO, the EOC will be activated and the necessary members of the Emergency Management Team are determined. The Incident Commander shall form an ICG and contact the ERC. The ERC will notify the appropriate emergency response groups. Table 1 describes the assistance available from each response group. The Incident Commander may use this list as criteria to determine which groups to contact in an emergency. Each response group maintains an on-call person and/or a call-down procedure to respond to emergencies.

4.3 Emergency Manager Actions

Upon notification of an incident, the Emergency Manager (Incident Commander) shall:

1. Proceed directly to the scene.

2. Call the ERC.

3. Assess the nature of the incident (e.g., through communication with the temporary Incident Commander).

4. Assume Incident Command.

5. In conjunction with the ERC, determine the quantities and types of hazardous waste involved.

6. Based on the guidelines in Section 4.1 of this plan, determine if implementation of this Contingency Plan is warranted.

7. Recommend activation of the EOC, if necessary.

Upon deciding to implement this Contingency Plan, the Incident Commander will perform the following additional response actions using the ERC, when appropriate:

1. Assess the hazards to human health and the environment including both direct and indirect effects, such as generation of toxic, irritating, or asphyxiating gases and/or hazards of runoff of water or chemicals used for fire suppression. An individual designated by the Emergency Manager will use the guidelines in Section 4.1 to assess the hazards to human health and the environment. If any of the criteria under Section 4.1 are met, evacuation of the immediate area will be initiated if the response group leader has not already accomplished evacuation of the area.

2. Determine if evacuation of the local area is advisable and, if so, immediately notify appropriate response groups and the LAPD.

3. Notify required response personnel and the DOE Los Alamos Area Office (LAAO) by phone, radio, or through the CAS Dispatcher. In the case of fire, the Emergency Manager shall confirm that the Fire Department Officer-in-Charge at the scene is aware of the special hazards associated with hazardous waste, and will assume Incident Command.

4. Warn the remaining on-scene and response personnel of imminent or actual hazards using the radio or the public address (PA) system.

5. In emergency situations, the activated EOC Crisis Manager (Laboratory Director or designee), through the Environmental Management representative, will notify the New Mexico Environment Department (NMED) at (505) 827-9329, and the National Response Center at (800) 424-8802, reporting:

   - Name and telephone number of the reporter;
   - Name and address of the facility;
   - Time and type of incident;
   - Name and quantity of material involved, to the extent known;
   - The extent of injuries, if any; and
   - The possible hazards to human health or the environment outside the facility.

6. Advise the response groups of hazards to minimize personnel exposure and expedite mitigation.

Once control of the emergency is established, the Incident Commander will delegate cleanup and decontamination responsibilities to the affected areas's line management. The responsibility group leader or group leader designee shall:

1. Arrange for site cleanup.

2. Provide for proper handling of recovered waste, contaminated soil, or contaminated surface/groundwater.

3. Provide for decontamination of equipment as needed.

4. Arrange for replacement and/or repair of equipment, as needed.

5. Ensure that testing is conducted to verify successful cleanup.

Within 15 days of the incident, DOE LAAO will submit the report described in Section 10.0 to the Environmental Protection Agency (EPA) Regional Administrator and the NMED.

5.0 SPILLS

Sudden releases include spills of hazardous waste which pose a significant threat to human health or the environment. Spill incidents resulting in a sudden release of hazardous waste to the environment which cannot be contained or which presents a threat to human health or the environment require implementation of this Contingency Plan.

The general steps in handling hazardous waste spills are:

- Containment, including spreading absorbents or forming temporary dikes;
- Waste pickup and packaging in sound containers; and
- Decontamination followed by testing to assure adequate cleanup.

The steps to be taken for spill mitigation will be determined by the Incident Commander with input from the ERC. If initial mitigation of the spill is necessary before the Emergency Manager arrives, a qualified member of the affected area's operating group will serve as the temporary Incident Commander.

5.1 Spill Control Procedures

Absorbent will be added to the waste spill during spill control.

5.2 Decontamination Verification

Decontamination will be accomplished at the spill site. After the spilled material has been absorbed, the material will be containerized. Because the floor of the RD&D unit is cement, water or an appropriate solvent will be used to clean the area and this liquid will be absorbed with universal sorbent and containerized.

A sample of unused decontamination water or solvent and absorbent material will be taken prior to the final washing to establish baseline data. A composite sample will then be taken of the material used to absorb the final waste water. No hazardous waste constituents should be present in this sample that were not present at similar levels in the unused decontamination water. If the sample exhibits any of the characteristics of a hazardous waste as defined in 40 CFR Part 261 Subpart C, or a hazardous constituent as listed in 40 CFR Part 261 Appendix VIII (and not detected in the unused decontamination water) is present above established health-based levels, the decontamination procedures will be repeated. An alternative demonstration of

decontamination may be proposed and justified to the Secretary, NMED, who will evaluate the proposed alternative in accordance with the standards and guidance then if effect. If the proposed alternative is accepted, decontamination levels will meet the levels approved by the NMED. Each composite sample will be taken using a thief or trier as specified in EPA's SW-846, "Test Methods for Evaluating Solid Waste," Physical/chemical Methods, latest edition.

6.0 EXPLOSION

A sudden release caused by an explosion may result in a significant threat to human health or the environment. Implementation of this Contingency Plan is required whenever a sudden release which cannot be contained or which presents a threat to human health or the environment occurs as a result of an explosion.

In the case of explosions, all personnel will immediately evacuate the area. Any injured personnel will be decontaminated in the field, if required and if time allows, and transported by LAFD ambulance to an HS-2 facility of LAMC for treatment. If an injury is severe and requires immediate medical evacuation, the injured person will be wrapped to contain contamination. The Emergency Management Office must be contacted immediately upon activation of the emergency central alarm system, and then the Emergency Manager will ensure that all necessary emergency response personnel are alerted. The LAFD is notified automatically upon central alarm system activation. The Emergency manager assumes Incident Control and will remain near the site, but at a safe distance, to inform the personnel responding to the explosion of the known hazards.

Upon arrival at the scene, the LAFD Senior Officer will evaluate information provided by the group leader, other site personnel, other members of the ICG, and Incident Commander to select the appropriate fire-fighting methods and tactics. The LAFD Senior Officer will direct fire fighting operations under the general direction of the Incident Commander.

7.0 FIRE

Fires may result in a sudden release of hazardous waste that poses a significant threat to human health or the environment. Implementation of this Contingency Plan is required whenever a fire incident results in a sudden release of hazardous waste which cannot be contained or which presents a threat to human health or the environment.

Depending on the size of the fire, portable fire extinguishers may be used. However, LANL policy discourages the use of portable fire extinguishers by employees and encourages immediate evacuation of the area and notification of the Los Alamos Fire

Department. The Emergency Manager will alert all necessary emergency response personnel. The Fire Department is automatically alerted when the emergency central alarm system is activated. If the fire spreads or increases in intensity, all personnel should evacuate to an area designated by the responsible group leader or Emergency Manager. The Emergency Manager assumes Incident Command and should remain near the scene to advise the personnel responding to the fire of the known hazards. The Emergency Manager is familiar with spill response and emergency actions and, therefore, is qualified to advise fire-fighting personnel of the potential hazards involved.

Upon arrival at the scene, the LAFD Senior Officer will evaluate information provided by the group leader, other site personnel, other members of the ICG, and Incident Commander to select the appropriate fire-fighting methods and tactics. The LAFD Senior Officer will direct fire-fighting operations under the general direction of the Incident Commander.

8.0 EVACUATION

A facility will be evacuated upon the voice command to evacuate the area, or upon the sounding of the evacuation alarm or the fire alarm.

8.1 Emergency Process Shutdown Prior to Evacuation

Personnel are instructed to shut down equipment prior to evacuating a building unless an immediate building evacuation is announced or signaled.

8.2 Evacuation Plan

Emergency situations may warrant the shutdown and evacuation of an area(s) or building(s) in order to protect personnel and property, to anticipate the emergency condition, or to enhance the appropriate response.

To initiate building evacuation, the evacuation or fire alarm is sounded and/or the public address system is used. The evacuation alarm cannot be silenced or reset by site personnel. The Fire Alarm Maintenance Section at 667-4027 and the LAFD Platoon Chief at 667-7026 can silence and reset the alarm.

To evacuate a portion of a building, the PA system is more appropriate. The PA system will notify the occupants of the area to be evacuated and, additionally, will advise personnel in the rest of the facility of the existence of a problem in that specific area.

The PA system, fire alarm, or evacuation alarm may be used to initiate an evacuation. Once evacuation has been initiated, personnel are to turn off all equipment, if conditions allow, that could contribute to the hazard if left unattended.

Personnel should then leave the affected area and go to the muster area.

In the event of an evacuation of only a portion of the building, the responsible group leader will designate a control point at the closest safe location (e.g., considering wind direction). This area will be outside the affected area and will serve as a muster point where the group leader or his designee can oversee evacuation operations and work to prevent further spread of the hazard.

For a small-scale evacuation, a responsible on-site person may direct evacuation. For a large-scale evacuation, the emergency central alarm system may be activated, the EMO will be notified and, until the Emergency Manager arrives at the scene to assume responsibility for the evacuation, a responsible on-site person may begin the evacuation process.

9.0 SALVAGE AND CLEANUP

The affected area will be surveyed by appropriate representatives from the HS and EM Groups before salvage, cleanup, and return to normal operations. Visual inspections of the affected area will be supplemented by sampling to determine whether cleanup is complete. After determination of any existing hazards from toxic or hazardous gases or fumes, electrical hazards, radiological hazards, or other unsafe conditions, personnel, or selected team will reenter the area to perform designated contamination tasks, repairs, and salvage to allow the return to normal operations. After an emergency, the Incident Commander will turn the operation over to line management, who will:

- Provide for proper handling of recovered waste, contaminated soil or surface water, or any other material that results from a release, fire, or explosion;
- Arrange for site cleanup procedures to be completed; and
- Ensure that emergency equipment is cleaned, decontaminated, and fit for its intended use before operations are resumed.

Damage assessment, recovery, and reporting shall be performed within the requirements of DOE Order 5000.3A, as referenced by DOE Order 5500.3A (Emergency Planning and Preparedness for Operational Emergencies). The Incident Commander assumes the coordination of post-emergency actions, particularly during the time period immediately after the emergency. Such actions include cleanup operations, repair of vital equipment, or interim hazard-removing operations (such as demolition of unstable walls). The services of the affected operational organizations,

HS and EM Divisions, JCI, and other on-site resources will also be utilized to estimate cleanup costs and operational impact.

10.0 POST-EMERGENCY ASSESSMENT

When the emergency is over, the cause of the emergency and the effectiveness of the response are investigated, in order that future emergencies may either be prevented, or that the response to them may be more effective. Following each event requiring the implementation of this Contingency Plan, the Emergency Manager will schedule and conduct a critique with representatives of all responding groups, building/area representatives, and LANL management to determine the adequacy of the response.

11.0 EMERGENCY RESPONSE RECORDS AND REPORTS

The details of any incident that requires implementation of this Contingency Plan must be recorded by the responsible group or section leader for the RD&D unit. This Incident Report must include the time, date, and full description of the incident.

Any emergency that requires implementation of this Contingency Plan will be reported in writing within 15 days to the NMED. The report, submitted DOE LAAO, shall include the following data:

- Name, address, and phone number of owner or operator;
- Name, address, and phone number of the facility;
- Date, time, and type of incident (e.g., fire, explosion, spill);
- Name of material involved;
- Quantity of material involved;
- Extent of injuries (if any);
- Assessment of actual or potential hazards to human health or the environment; and
- Estimated quantity and disposition of material recovered from the incident.

12.0 CONTINGENCY PLAN AMENDMENT

This Contingency Plan will be reviewed by the EMO, EM-7, EM-8, and by HS-5 and HS-12, if necessary, and will be immediately amended if determined to be inadequate to handle spills, explosions, fires and whenever:

- The facility permit is revised;

- There is significant change in the design or operation of the facility (i.e., waste quantities handled and handling techniques);
- The list of Emergency Managers changes;
- Operating experience or technical review demonstrates that the plan is inappropriate.
- Actual implementation of the plan demonstrates inadequacies.

13.0 REFERENCES

Benchmark Environmental Corporation, 1990, "TA-54 Muster Stations," prepared for Los Alamos National Laboratory, November 1990.

Los Alamos National Laboratory, "RCRA Interim Status Contingency Plan for Mixed Waste Units," Los Alamos, New Mexico, May 1992.

Los Alamos National Laboratory, Emergency Management Office, "Emergency Response Plan," Los Alamos, New Mexico, September 1991.

Los Alamos National Laboratory, Attachment D (Contingency Plan) to RCRA Operating Permit, issued by New Mexico Health and Environment Department, November 8, 1989.

U.S. Department of Energy, 1990, "Emergency Planning and Preparedness for Operational Emergencies," DOE Order 5500.3A, Washington, D.C.

U.S. Department of Energy, 1990, "Spill Prevention, Control, and Countermeasure Plan for the Los Alamos National Laboratory," Revision 2.

U.S. Department of Energy, 1988, "Radioactive Waste Management," DOE Order 5820.2A, Washington, D.C.

U.S. EPA, 1990, "Hazardous Waste Operations and Emergency Response," U.S. Environmental Protection Agency, 29 CFR Part 1910.120.

U.S. EPA, 1990, "Interim Status Standards For Owners and Operators of Hazardous Waste Treatment, Storage, and Disposal Facilities," U.S. Environmental Protection Agency, 40 CFR Part 265.

U.S. EPA, 1986, "Test Methods for Evaluating Solid Waste," Laboratory Manual Physical/Chemical Methods, Volumes 1A-1C, EPA-SW-846, U.S. Government Printing Office.

TABLE 1
RESPONSE GROUPS AND AGENCIES AVAILABLE TO THE EMERGENCY MANAGEMENT OFFICE FOR GUIDANCE AND/OR EMERGENCY ASSISTANCE

LABORATORY CONTROLLED RESPONSE GROUP	TELEPHONE	RESPONSIBILITIES
HS-1, Health Physics Operations	667-5296	Radiological monitoring and decontamination.
HS-2, Occupational Medicine	667-7251	Emergency medical treatment.
HS-3, Risk Management Support	667-3363	Provides personnel to perform risk analyses. Provides guidance on operational safety.
HS-5, Industrial Hygiene and Safety	665-4427	Site evaluation - field testing to determine the nature and extent of contamination (nonradiological). Specify protective clothing and equipment. Provide HAZMAT Team.
HS-12, Health Physics Policy and Programs	667-5296	Provide support for radiological incidents, provide REA Team capable of performing radiological assessments and personnel decontamination. Maintain radiological emergency preparedness for the Laboratory.
EM-7, Waste Management	667-5839	Provide guidance on proper treatment, storage, and off-site shipment of mixed waste.
EM-8, Environmental Protection	667-5021	Field surveys to determine spread of contamination and adequacy of cleanup.
EM-9, Environmental Chemistry	667-3269	Chemical/radiological analytical services.

TABLE 1
(Continued
RESPONSE GROUPS AND AGENCIES AVAILABLE TO THE EMERGENCY MANAGEMENT OFFICE FOR GUIDANCE AND/OR EMERGENCY ASSISTANCE

LABORATORY CONTROLLED RESPONSE GROUP	TELEPHONE	RESPONSIBILITIES
NMT, Nuclear Materials Technology	667-2556	Monitor for leaks, pressure buildup, gas generation, or equipment ruptures in the event of interruption of operations at TA-55 due to an emergency.
Protection Technology Los Alamos Protective Force (Pro Force)	667-4437	Traffic control, security.
Johnson Controls World Services, Inc.	667-6191	Maintenance personnel and equipment, assist in waste cleanup under HS-5 guidance.
NON-LABORATORY CONTROLLED RESPONSE GROUP	**TELEPHONE**	**RESPONSIBILITIES**
Los Alamo Fire Department	9-911	Firefighting personnel and equipment.
Los Alamos Police Department	9-911	Traffic control of DOE roads with public access.
Los Alamos Medical Center*	662-4201 or 911	Medical services.

* Medical services related to hazardous and mixed waste injuries provided under the direction of HS-2.

TABLE 2
EMERGENCY MANAGEMENT OFFICE EMERGENCY MANAGERS*

EMERGENCY MANAGERS	LABORATORY TELEPHONE	HOME TELEPHONE	HOME ADDRESS
James S. Griffiths	7-6211	662-9155	190 Manhattan Loop, Los Alamos, NM
Gary W. Bequette	7-6211	662-4554	2369-B 33rd Street, Los Alamos, NM
Frank G. Pearce	7-6211	984-8901	110 Delgado Street, Los Alamos, NM
Deanna M. Seitz	7-6211	662-7356	65 San Juan, Los Alamos, NM
James A. Walton	7-6211	455-3316	Route 11, Box 20, Space 19, Santa Fe, NM

* To ensure immediate response, the Emergency Manager may be reached at the Emergency Management Office, 667-6211 or, after hours, 667-7080.

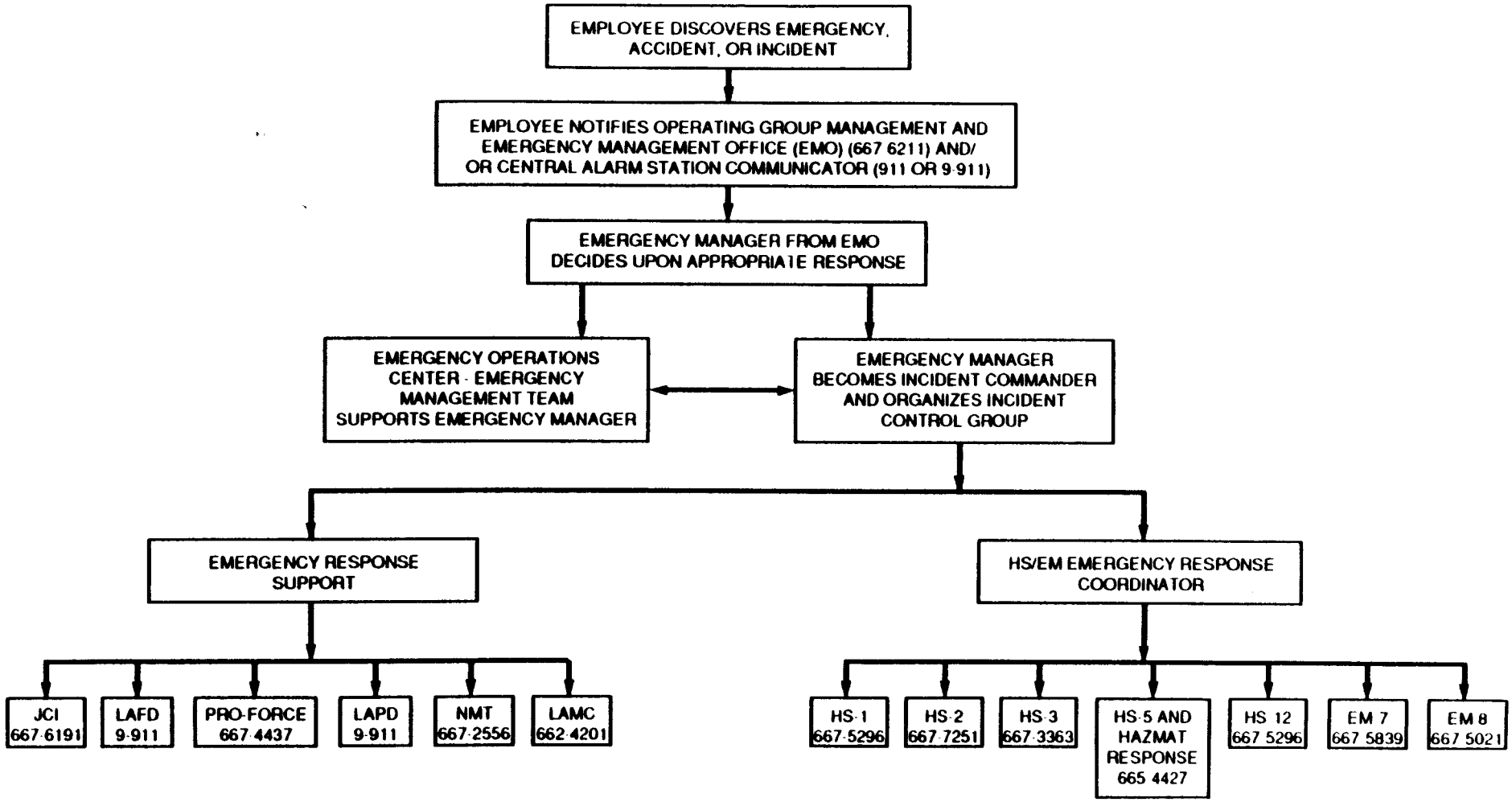

Figure 1 Waste Emergency Notification Structure

FIGURE 2. EMERGENCY FACILITIES

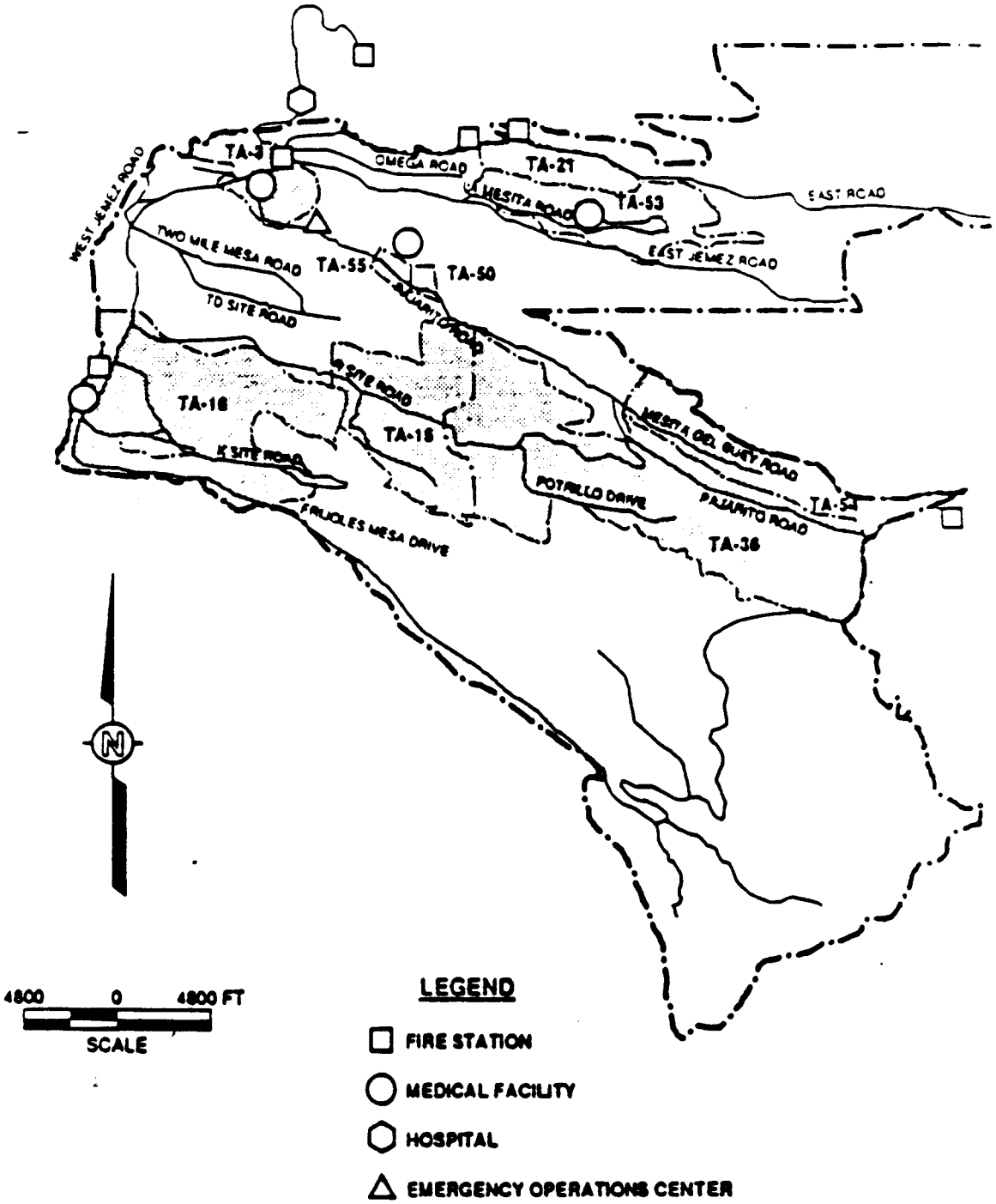

ATTACHMENT 7

TRAINING COURSE SUMMARIES

Los Alamos National Laboratory

HYDROTHERMAL PROCESSING
RD&D PERMIT

Subject: General Employee Training (GET)

Relevant Compliance Requirements	DOE 5480.10, DOE 5480.11, DOE 5480.20, and LP 106-01.0
Description	GET consists of the following fifteen training modules. Facilities (5974) Policies (5975) Quality Assurance (5976) Security (5977) Safeguard Awareness (5711) ES&H Policy (5542) Employee Participation Packet (4459) OSHA Rights and Regulations (5543) Industrial Safety (5540) Fire Protection (5224) Emergency Management (5544) Industrial Hygiene (5545) Occupational Medicine (5546) Radiation Protection for the Occupational Worker (5547) Lockout/Tagout (5541) Environment (5548)
Audience	All new employees, contractors, affiliates, long-term visitors, and co-op students.
Prerequisites	None
Retraining	Radiation Protection for the Occupational Worker (5547): every two years OSHA Rights and Regulations (5543): yearly Lockout/Tagout (5541): every two years
Length	8 hours
Frequency	Every Monday and Tuesday as part of the hiring process
Contact	HS-3, 7-0059, K479

Subject: **Health**
Course: **Introduction to Hazard Communication**

Course Number: 2398

Relevant Compliance Requirements	ARs 1-4, 1-9, 2-1, 6-1, 6-2, 6-3, 6-4, 6-5, 6-6, 6-7, 6-8, 6-9, 8-1, 8-3, and 12-1
Description	Provides information about requirements of the Hazard Communication Standard and its application at the Laboratory; includes detailed discussion of employee's right to know, labeling requirements, and Material Safety Data Sheets (MSDSs) and the general principles of hazard recognition, evaluation, and control.
Audience	Required for all new and transferred employees and visitors who work directly with chemicals or who may be routinely exposed to chemicals during the course of their normal work activities.
Prerequisites	None
Retraining	None
Length	2 hours
Frequency	Weekly
Contact	HS-3, 7-0059, K494

Subject: **Environment** Course Number: 4465

Course: **Hazardous Waste Operations: Occasional Site Worker (24 hr)**

Relevant Compliance Requirements	29 CFR 1910.120
Description	Meets OSHA training requirements as described in 29 CFR 1910.120. Topics include regulations, rights and responsibilities of workers, nature of hazards, toxicology, industrial hygiene, monitoring methods and equipment, hazard evaluation, storage, handling and labeling, personal protective equipment, engineering controls, decontamination, and emergency response plans. One additional day of field experience under a trained, experienced supervisor is required to complete the training.
Audience	Required for workers who are on the site of a treatment, storage, and disposal (TSD) facility or a solid waste management unit (SWMU) only occasionally for a specific limited task (such as, but not limited to, groundwater monitoring, land surveying, and geophysical surveying) and who are unlikely to be exposed to hazard levels over permissible exposure limits and published exposure limits.
Prerequisite	None
Retraining	8 hours once a year; see Hazardous Waste Operations Refresher (Course 4466)
Length	24 hours
Frequency	As needed
Contact	HS-3, 7-0059, MS K479

Subject: **Environment** Course Number: 4464

Course: **Hazardous Waste Operations: General Site Worker (40 hr)**

Relevant Compliance Requirements	29 CFR 1910.120
Description	Meets OSHA training requirements as described in 29 CFR 1910.120. Topics include regulations, hazards, toxicology, industrial hygiene, monitoring and sampling, personal protective equipment, engineering controls, decontamination, site safety plans, standard operating procedures, medical surveillance programs, and emergency preparedness. Three additional days of field experience under a trained, experienced supervisor are required to complete the training.
Audience	Required for general site workers (such as equipment operators, general laborers, and supervisory personnel) engaged in hazardous substance removal and cleanup, or other activities that expose or could expose workers to hazardous substances and health hazards.
Prerequisite	To participate in the field exercise, students must have a current respirator certificate.
Retraining	8 hours once a year; see Hazardous Waste Operations Refresher (Course 4466)
Length	40 hours
Frequency	As needed
Contact	HS-3, 7-0059, MS K479

Subject: **Environment** Course Number: 4466

Course: **Hazardous Waste Operations: Refresher**

Relevant Compliance Requirements	None
Description	Meets annual refresher training requirements for anyone who has completed 24- or 40-hour OSHA training as described in 29 CFR 1910.120. Topics include a review of regulations, toxicology, industrial hygiene, monitoring and sampling, and personal protective equipment.
Audience	Required for all employees and supervisors who have taken the Hazardous Waste Operations courses for Occasional or General Site Workers.
Prerequisite	Hazardous Waste Operations: Occasional Site Worker (24 hr, Course 4465) or Hazardous Waste Operations: General Site Worker (40 hr, Course 4464)
Retraining	Yearly
Length	8 hours
Frequency	As needed
Contact	HS-3, 7-0059, MS K479

Subject: **Environment** Course Number: 4419

Course: **Hazardous Waste Generator Training**

Relevant Compliance Requirements	ARs 9-4 and 10-3
Description	Defines hazardous waste and its classifications; describes the federal and state laws and regulations governing hazardous waste, including procedures for handling empty containers, procedures for mixing wastes, and the responsibilities of hazardous waste generators.
Audience	Required for all employees who generate hazardous waste, including spill coordinators and hazardous waste managers.
Prerequisite	None
Retraining	None
Length	2 hours
Frequency	Weekly (module in Extended General Employee Training)
Contact	HS-3, 7-0059, MS K479

Subject: **Safety** Course Number: 2377

Course: **Electrical Safety Awareness Training**

Relevant Compliance Requirements	ARs 7-1, 8-1, 8-5, and 8-7
Description	Familiarizes students with electrical hazards and their identification, personal protection devices, housekeeping, flexible cables, capacitors, inductors, interlock systems, and administrative requirements for working on electrical equipment.
Audience	Required for electrical, electronic, and electromechanical technicians; electrical and electronic engineers; and experimental scientists utilizing apparatus with high voltages and currents.
Prerequisites	None
Retraining	Once every 3 years
Length	3 hours
Frequency	2 times a month and as needed
Contact	HS-3, 7-0059, K479

Subject: **Safety** Course Number: 5264

Course: **Pressure Safety: Compressed Gas Systems**

Relevant Compliance Requirements	ARs 6-8, 6-9, and 14-1
Description	Provides a basic understanding of fluid force and pressure relationships and presents the Laboratory requirements for working with intermediate fluid pressures of 150 to 3000 psia.
Audience	Required for all personnel working with fluid pressures over 150 psia.
Prerequisites	Pressure Safety Orientation (Course 769)
Retraining	None
Length	4 hours
Frequency	4 times a year and as needed
Contact	HS-3, 7-0059, K479

WDU Training Checklist

System Familiarization:

- Physical function and operation of all components in the Waste Destruction Unit.
- Health and safety hazards associated with the WDU, before, during, and after operations.
- Electrical system and electric power requirements.
- Instrumentation.
- Data acquisition and control system.

Operations (including hands-on training during actual runs). This training will be conducted with the LabVIEW-based monitoring and control program on the Macintosh computer. This also includes safety procedures to be followed during operation.

- Pre-run checklist - setup of WDU for subsequent remote operation.
- Operating parameter setting and "manual" versus "automatic" (feed-back) control settings.
- Start-up procedure.
- Monitoring and control during a run. This includes becoming familiar with the hydraulic and thermal dynamic characteristics of the system as observed on the monitoring screens
- Normal shutdown procedure and post-run physical checklist.
- Emergency shutdown procedures including familiarization with automatic (computer-controlled) shutdown operation and required follow-up.