ERID
CMS #59172

DEFENSE ENVIRONMENTAL RESTORATION PROGRAM

FINAL RECORD OF DECISION

UMATILLA DEPOT ACTIVITY
EXPLOSIVES WASHOUT LAGOONS GROUND WATER OPERABLE UNIT

June 7, 1994

3547

This document is printed on recycled paper and is recyclable.

In accordance with Army Regulation 200-2, this document is intended by the Army to comply with the National Environmental Policy Act of 1969 (NEPA).

1.0 Declaration of the Record of Decision

Site Name and Location

U.S. Army Depot Activity, Umatilla
Explosives Washout Lagoons, Ground Water Operable Unit
Hermiston, Oregon 97838-9544

Statement of Basis and Purpose

This decision document presents the selected remedial action for the Explosives Washout Lagoons (EWL) Ground Water Operable Unit at the U.S. Army Depot Activity, Umatilla (UMDA), at Hermiston, Oregon. The remedial action has been chosen in accordance with the Comprehensive Environmental Response, Compensation, and Liability Act of 1980 (CERCLA), as amended by the Superfund Amendments and Reauthorization Act of 1986 (SARA), and, to the extent practicable, the National Oil and Hazardous Substances Pollution Contingency Plan (NCP). The decision is based on the administrative record for this site. Documents supporting this Record of Decision (ROD) are identified in Appendix B.

The remedy was selected by the U.S. Army and the U.S. Environmental Protection Agency (EPA). The State of Oregon concurs with the selected remedy.

Assessment of the Site

Actual or threatened releases of hazardous substances from the site, if not addressed by implementing the response action selected in this ROD, may present an imminent and substantial endangerment to public health, welfare, or the environment.

Description of the Selected Remedy

The Explosives Washout Lagoons Ground Water Operable Unit is the second of three operable units that are to address the Explosives Washout Lagoons. The operable units were divided by contaminated media: soils, ground water, and building and equipment. The first operable unit addressed the Explosives Washout Lagoons Soils (ROD was issued in September 1992). The Ground Water Operable Unit addresses contaminated ground water caused by past waste disposal to the Explosives Washout Lagoons. The third operable unit is specific to the remediation of the Explosives Washout Plant. This operable unit includes the remediation of the contaminated building surfaces and equipment; the explosive contaminated soils surrounding the plant will be remediated with the Explosives Washout Lagoon Soils.

In total, eight operable units have been identified at the UMDA site:

- Inactive Landfills
- Active Landfill
- Ground Water Contamination from the Explosives Washout Lagoons
- Ammunition Demolition Area (ADA)
- Miscellaneous Sites
- Explosive Washout Plant (Building 489)
- Washout Lagoons Soils
- Deactivation Furnace and Surrounding Soils

The selected remedial action for the Explosives Washout Lagoons Ground Water Operable Unit is Alternative 4B from the feasibility study (FS) report, extraction of the contaminated ground water followed by granular activated carbon (GAC) treatment of the ground water and reinfiltration of the ground water back into the aquifer. The major components of the alternative are:

- Extraction of the ground water from an estimated three extraction wells over an estimated 10- to 30-year period
- Treatment by GAC to meet performance standards based on the ground water cleanup levels
- In-situ flushing of subsurface soils beneath the lagoons with all or part of the treated ground water for an estimated period of one year
- Upgradient reinfiltration of the treated ground water that does not go to the Explosive Washout Lagoons and all the treated water after the in-situ soil flushing is completed
- Testing of the spent GAC to determine RCRA characteristic hazardous waste status
- Off-site thermal treatment and disposal of explosive-contaminated GAC to the level specified in the remedial design (off-site thermal treatment will be in compliance with the NCP Off Site Rule)
- Monitoring of ground water contamination to determine the effectiveness of the remedial action and to determine when the ground water cleanup levels have been attained
- Institutional controls on the contaminated ground water to prevent the use of the ground water until the ground water cleanup levels are met

The remediation of the ground water will continue until the concentration of explosives in the aquifer meets cleanup levels that are protective of human health and the environment. Because no applicable or relevant and appropriate requirements (ARARs) currently exist for the explosive contaminants, risk-based cleanup levels were calculated to protect against carcinogenic risks in excess of 1×10^{-6} and non-carcinogenic risks with a hazard quotient greater than 1. Lifetime Human Health Advisories were considered "To Be Considered" (TBC) ARARs and were also used to set cleanup levels. The performance standards for the treatment of the extracted ground water were set in the same manner as the cleanup levels for the aquifer.

A limit of 10 percent explosives on the GAC sent off site was set in order to ensure that the GAC would not be a characteristic RCRA hazardous waste for reactivity. The 10 percent limit was set based on a USAEC study (Arthur D. Little, 1987) to determine reactivity of explosive-contaminated sludges. The spent GAC would also have to pass a toxicity characteristic leaching procedure (TCLP) test for 2,4-DNT in order not to be considered a RCRA hazardous waste. The performance standards for the off-site thermal treatment of the explosive-contaminated GAC would be determined during the remedial design; however they would be based on either a residence time and temperature or a chemical-specific cleanup level for the residuals that are below risk-based remedial action criteria.

In order to ensure that the off-site thermal treatment does not contribute to present or future environmental problems, the selection of a thermal treatment facility will follow the procedures presented in *Procedures for Planning and Implementing Off-Site Response Actions,* FR 49200 September 22, 1993.

The goal of this remedial action is to restore the ground water to its beneficial use, which may include drinking water or non-domestic uses. Based on the information obtained during the remedial investigation (RI) and the analysis of all remedial alternatives, the Army, EPA, and the State of Oregon believe that the selected remedy may be able to achieve this goal. Ground water contamination may be especially persistent in the immediate vicinity of the contaminants' source, where the concentrations are relatively high. The ability to achieve cleanup levels at all points throughout the area of attainment, or plume, cannot be determined until the extraction system has been implemented, modified as necessary, and plume response monitored over time.

The selected remedy will include ground water extraction for an estimated period of 10 to 30 years, during which time the system's performance will be carefully monitored on a regular basis and adjusted as warranted by the performance data collected during operation. Modifications may include any or all of the following:

- Discontinuing pumping individual wells where cleanup levels have been attained
- Alternating pumping at wells to eliminate stagnation points
- Pulse pumping to allow aquifer equilibration and encourage adsorbed contaminants to partition into the ground water
- Installation of additional extraction wells to facilitate or accelerate cleanup of the contaminant plume

To ensure that cleanup levels continue to be maintained, the aquifer will be monitored at least annually at those wells where pumping has ceased. When the ground water cleanup levels have been achieved at all the extraction wells and have not been exceeded for a period of three consecutive years, the cleanup will be considered complete.

Statutory Determinations

The selected remedy is protective of human health and the environment, complies with federal and state requirements that are legally applicable or relevant and appropriate to the remedial action, and is cost-effective. This remedy utilizes permanent solutions and alternative treatment technologies to the maximum extent practicable, and satisfies the statutory preference for remedies that employ treatment that reduces toxicity, mobility, or volume as a principal element.

Because this remedy will result in hazardous substances remaining on site above cleanup levels for a period greater than five years after the commencement of the remedial action, reviews will be conducted at five-year intervals to ensure the remedy continues to provide adequate protection of human health and the environment. The first five-year review will include consideration of the following elements:

- The performance of the ground water treatment system in achieving cleanup levels
- The Hazard Quotient for 1,3,5-trinitrobenzene (TNB), as recalculated following chemical-specific toxicity studies initiated by the U.S. Army
- Property use above the ground water plume to ensure that water with contamination above cleanup levels is not used

2.0 Decision Summary

This Decision Summary provides an overview of the problems posed by the ground water conditions at the UMDA Explosives Washout Lagoons (EWL), the remedial alternatives, and the analysis of those options. Following that, it explains the rationale for the remedy selection and describes how the selected remedy satisfies statutory requirements.

2.1 Site Name, Location, and Description

The U.S. Army Depot Activity at Umatilla (UMDA) was established as an Army ordnance depot in 1941 for the purpose of storing and handling munitions. Access is currently restricted to installation personnel, authorized contractors, and visitors. UMDA was included in the Department of Defense (DoD) Base Realignment and Closure (BRAC) program, which requires that the UMDA conventional ordnance storage mission be transferred to another installation. Under this program, it is probable that the Army will eventually vacate the site; ownership could then be relinquished to another governmental agency or private interests. Light industry is considered to be the most likely future land use scenario for UMDA; future residential use is also a possibility.

UMDA is located in northeastern Oregon in Morrow and Umatilla Counties, approximately 5 miles west of Hermiston, Oregon, as shown in Figure 1. The installation covers 19,729 acres of land, of which 17,054 are owned by the Army and the remaining 2,675 acres are limited to agricultural use by restrictive easement. Contamination of the ground water occurred in the vicinity of the UMDA Explosives Washout Lagoons, as shown in Figure 2.

The Explosives Washout Lagoons site, also called Site 4, consists of two adjacent, unlined lagoons, each approximately 25 feet by 70 feet and 6 feet deep. Wastewater was discharged from the Explosive Washout Plant to the lagoons via a sheet metal trough. This trough has a concrete sump located about halfway between the Washout Plant and the lagoons.

During the washout operations, the sump collected sludge solids as excess washout water flowed through the trough to the lagoons. The two lagoons were used alternately, to allow the wastewater time to infiltrate into the soils. Sludge residue from the sump and the lagoon bottoms was collected, allowed to dry, and burned at the Ammunition Demolition Area (ADA) at UMDA.

The wastewater from the washout operation, also known as "pink water," contained high concentrations of explosives. An estimated 85 million gallons of this wastewater were discharged into the lagoons during their operation. The lagoons are located in a gravelly, sandy area, are unlined, and were intended to permit infiltration and evaporation of this wastewater. The wastewater seeped from the lagoons and contaminated the shallow ground water beneath the lagoons.

Ground water occurs beneath UMDA in a number of distinct hydrogeologic settings, in a series of relatively deep confined basalt aquifers and in a highly productive permeable unconfined aquifer in the south of UMDA (extending off-post). However, the ground water that has been contaminated by the use of the Explosives Washout Lagoons is isolated to the unconfined aquifer.

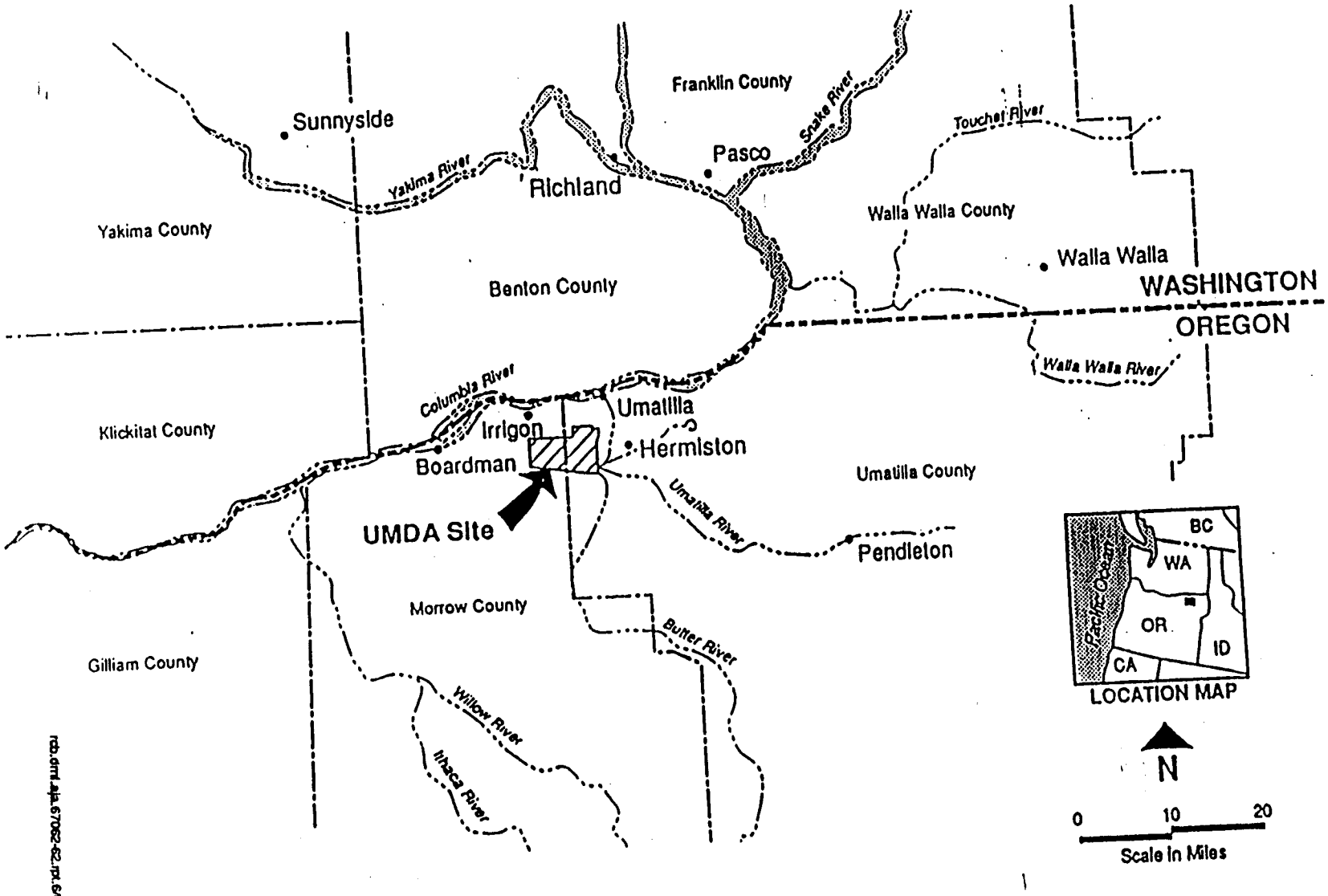

Source: Arthur D. Little, Inc., 1993, Fig 1

Figure 1
Facility Location Map
Umatilla Depot Activity

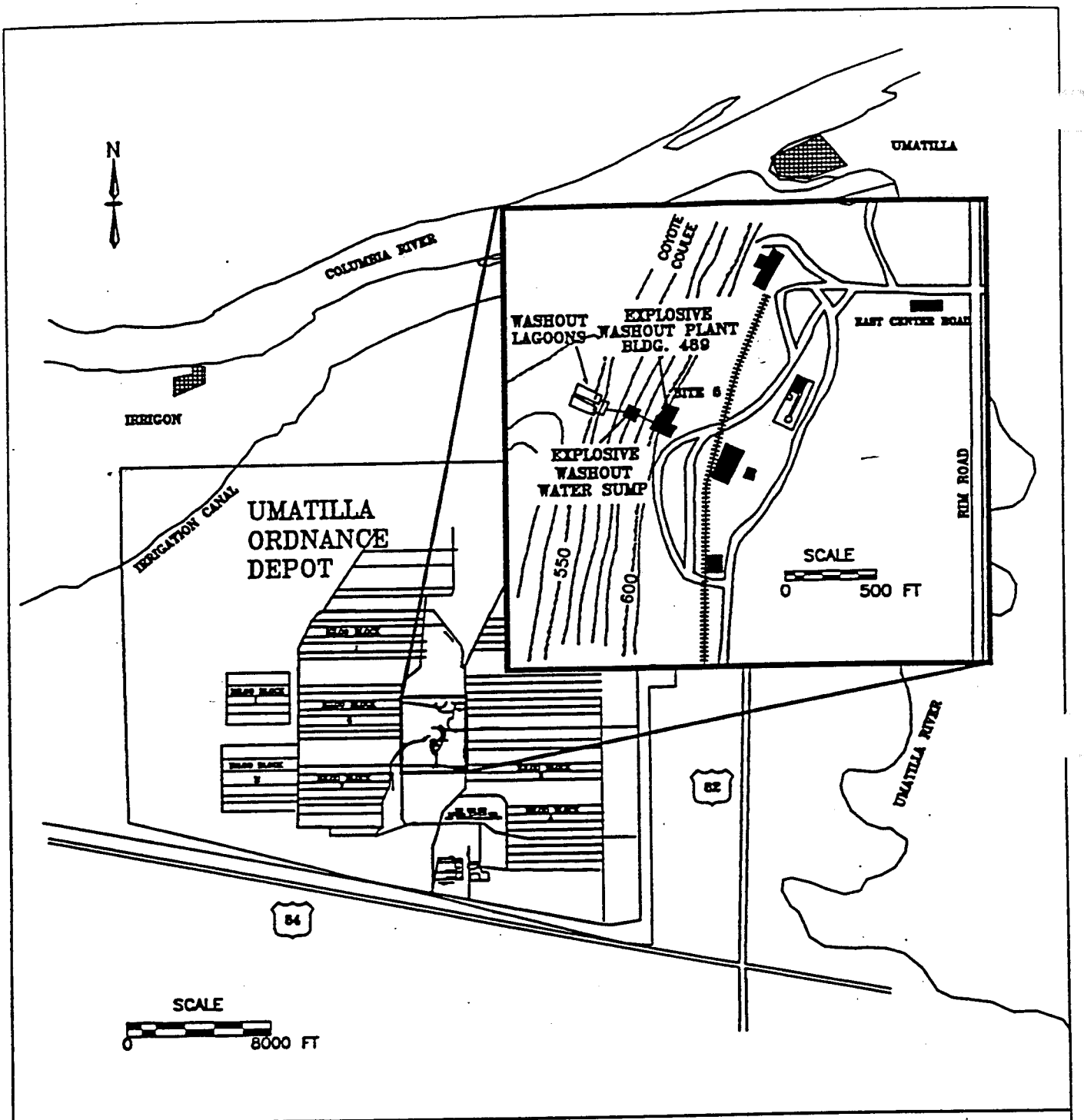

PREPARED FOR: ROD on UMATILLA Lagoons Ground Water			Figure 2: Location of Explosives Washout Plant and Washout Water Sump
DATE: JAN. 1994	SCALE: AS SHOWN	DWG. NO.: 67062-044	

Northeastern Oregon, the setting for UMDA, is characterized by a semi-arid, cold desert climate, an average annual precipitation of 8 to 9 inches, and a potential annual evapo-transpiration rate of 32 inches. The installation is located on a regional plateau of low relief that consists of relatively permeable glaciofluvial sand and gravel overlying Columbia River Basalt.

The region surrounding UMDA is primarily used for irrigated agriculture. The population centers closest to UMDA are Hermiston (population 10,075), approximately 5 miles east; Umatilla (population 3,032), approximately 3 miles northeast; and Irrigon (population 820), 2 miles northwest. The total populations of Umatilla and Morrow Counties are approximately 59,000 and 7,650, respectively.

Approximately 1,470 wells have been identified within a 4-mile radius of UMDA, the majority of which are used for domestic and irrigation water. Three municipal water systems (Hermiston, Umatilla, and Irrigon) draw from ground water within a 4-mile radius of UMDA. The Columbia River is a major source of potable and irrigation water, and is also used for recreation, fishing, and the generation of hydroelectric power. The principal use of the Umatilla River is irrigation.

2.2 Site History and Enforcement Activities

From the 1950s until 1965, UMDA operated an on-site explosives washout plant similar to that at other Army installations. The plant processed munitions to remove and recover explosives using a pressurized hot water system. The principal explosives consisted of the following:

- 2,4,6-trinitrotoluene (TNT)
- Hexahydro-1,3,5-trinitro-1,3,5-triazine (Royal Demolition Explosive or RDX)
- Octahydro-1,3,5,7-tetranitro-1,3,5,7-tetrazocine (High Melting Explosive or HMX)
- 2,4,6-tetranitro-N-methylaniline (Tetryl)

In addition, the munitions contained small quantities of 2,4-dinitrotoluene (2,4-DNT); 2,6-dinitrotoluene (2,6-DNT); 1,3,5-trinitrobenzene (TNB); 1,3-dinitrobenzene (DNB); and nitrobenzene (NB) occurring as either impurities or degradation products of TNT.

Operation of the plant included flushing and draining the explosives washout system. The washwater produced was discharged via an open metal trough to the two infiltration lagoons located to the northwest of the plant. The lagoons were constructed in the 1950s and used until 1965, when plant operations and all discharges to the lagoons ended. A total of 85 million gallons of effluent is estimated to have been discharged to the lagoons during the period of plant operation.

An initial installation assessment was performed in 1978 and 1979 to evaluate environmental quality at UMDA with regard to the past use, storage, treatment, and disposal of toxic and hazardous materials. Based on aerial imagery analysis provided by EPA's Environmental Photographic Interpretation Center (EPIC) as part of the assessment, the Explosives Washout Lagoons (Site 4) were characterized as a potentially hazardous site. In 1981, Battelle conducted an Environmental Contamination Survey and Assessment at UMDA and identified what appeared to be a 45-acre plume of RDX in the shallow aquifer underneath the Explosives Washout Lagoons. Battelle concluded that discharges to the lagoons had caused contamination of

the alluvial aquifer. Subsequent investigations confirmed the presence of explosives in the soil and ground water.

In 1984, the Explosives Washout Lagoons were evaluated using EPA's Hazard Ranking System (HRS) and received a score above 28.5. As a result, the lagoons were proposed for inclusion on the National Priorities List (NPL) in 49 Fed. Reg. 40320 (October 15, 1984). They were formally listed on the NPL in 49 Fed. Reg. 27620 (July 22, 1987) based on the HRS score and the results of the installation RCRA Facility Assessment.

On October 31, 1989, a Federal Facility Agreement (FFA) was executed by UMDA, the Army, EPA Region X, and the Oregon Department of Environmental Quality (ODEQ). The FFA identifies the Army as the lead agency for initiating response actions at UMDA. One of the purposes of the FFA was to establish a framework for developing and implementing appropriate response actions at UMDA in accordance with CERCLA, the NCP, and Superfund guidance and policy. Investigation and remediation of contaminated soil and ground water at the lagoons was a task identified within this framework. A remedial investigation and feasibility study (RI/FS) of the entire UMDA installation, including the lagoons, was initiated in 1990 to determine the nature and extent of contamination and to identify alternatives available to clean up the facility.

The RI and the human health baseline risk assessment (HBRA) were completed in August 1992. For purposes of the Feasibility Study, the washout lagoons soils and washout lagoons ground water were each designated as separate operable units. The Army, EPA, and ODEQ concurred on a ROD for the Washout Lagoons Soils Operable Unit in September 1992, which specified excavation and composting of all soils with TNT and RDX greater than 30 mg/kg. The feasibility study for the washout lagoons ground water was completed in December 1993, and the proposed plan was made available to the public in February 1994.

2.3 Highlights of Community Participation

In 1988, UMDA assembled a Technical Review Committee (TRC) composed of elected and appointed officials and other interested citizens from the surrounding communities. Quarterly meetings provided an opportunity for UMDA to brief the TRC on installation environmental restoration projects and to solicit input from the TRC. Two TRC meetings were held during preparation of the feasibility study for the Explosives Washout Lagoons Ground Water Operable Unit. In those meetings, the TRC was informed as to the scope and methodology of the ground water investigation and remediation.

In December 1993, the TRC was expanded to meet the requirements of the Restoration Advisory Board (RAB) based on DoD guidance. Two RAB meetings were held during the selection of the proposed alternative.

The feasibility study and proposed plan for the Explosives Washout Lagoons Ground Water Operable Unit were made available to the public on February 15, 1994, at the following information repository locations: UMDA Building 32, Hermiston, Oregon; the Hermiston Public Library, Hermiston, Oregon; and the EPA offices in Portland, Oregon. The notice of availability of the proposed plan was published in the *Hermiston*

Herald, the *Tri-City Herald*, and the *East Oregonian* on February 15, 1994. The public comment period began on February 15, 1994, and ended on March 17, 1994.

A public meeting was held at the Armand Larive Junior High School, Hermiston, Oregon, on March 2, 1994, to inform the public of the preferred alternative and to seek public comments. At this meeting, representatives from UMDA, the U.S. Army Environmental Center (USAEC), EPA, ODEQ, and Arthur D. Little, Inc. (an environmental consultant) answered questions about the site and remedial alternatives under consideration. A response to comments received at the meeting and during the 30-day comment period is included in Section 3.0, Responsiveness Summary.

2.4 Scope and Role of Operable Unit

Operable units are discrete actions that constitute incremental steps toward a final overall remedy. An operable unit can be an action that completely addresses a geographic portion of a site or a specific problem, or it can be one of many actions that will be taken at the site.

The Explosives Washout Lagoons Ground Water Operable Unit is the second of three operable units that are planned for the Explosives Washout Lagoons area. The operable units were divided by contaminated media: soils, ground water, and building and equipment. The first operable unit addressed the Explosives Washout Lagoons Soils (ROD was issued in September 1992). The Ground Water Operable Unit involves remediation of contaminated ground water beneath the lagoons. The third operable unit is specific to the remediation of the Explosives Washout Plant. This operable unit includes the remediation of the contaminated building surfaces and equipment; the explosive contaminated soils surrounding the plant will be remediated with the Explosives Washout Lagoons Soils.

In total, eight operable units have been identified at the UMDA site:

- Inactive Landfills
- Active Landfill
- Ground Water Contamination from the Explosives Washout Lagoons
- Ammunition Demolition Area (ADA)
- Miscellaneous Sites
- Explosive Washout Plant (Building 489)
- Washout Lagoon Soils
- Deactivation Furnace and Surrounding Soils

2.5 Site Characteristics and Environmental Investigation Results

Ground water occurs beneath UMDA in a number of distinct hydrogeologic settings (Figure 3), in a series of relatively deep confined basalt aquifers and in a highly productive permeable unconfined aquifer in the south of UMDA (extending off-post). However, the ground water that has been contaminated by the use of the Explosives Washout Lagoons is isolated to the unconfined aquifer.

Figure 3: Stratigraphic Cross-Section Beneath UMDA Washout Lagoons

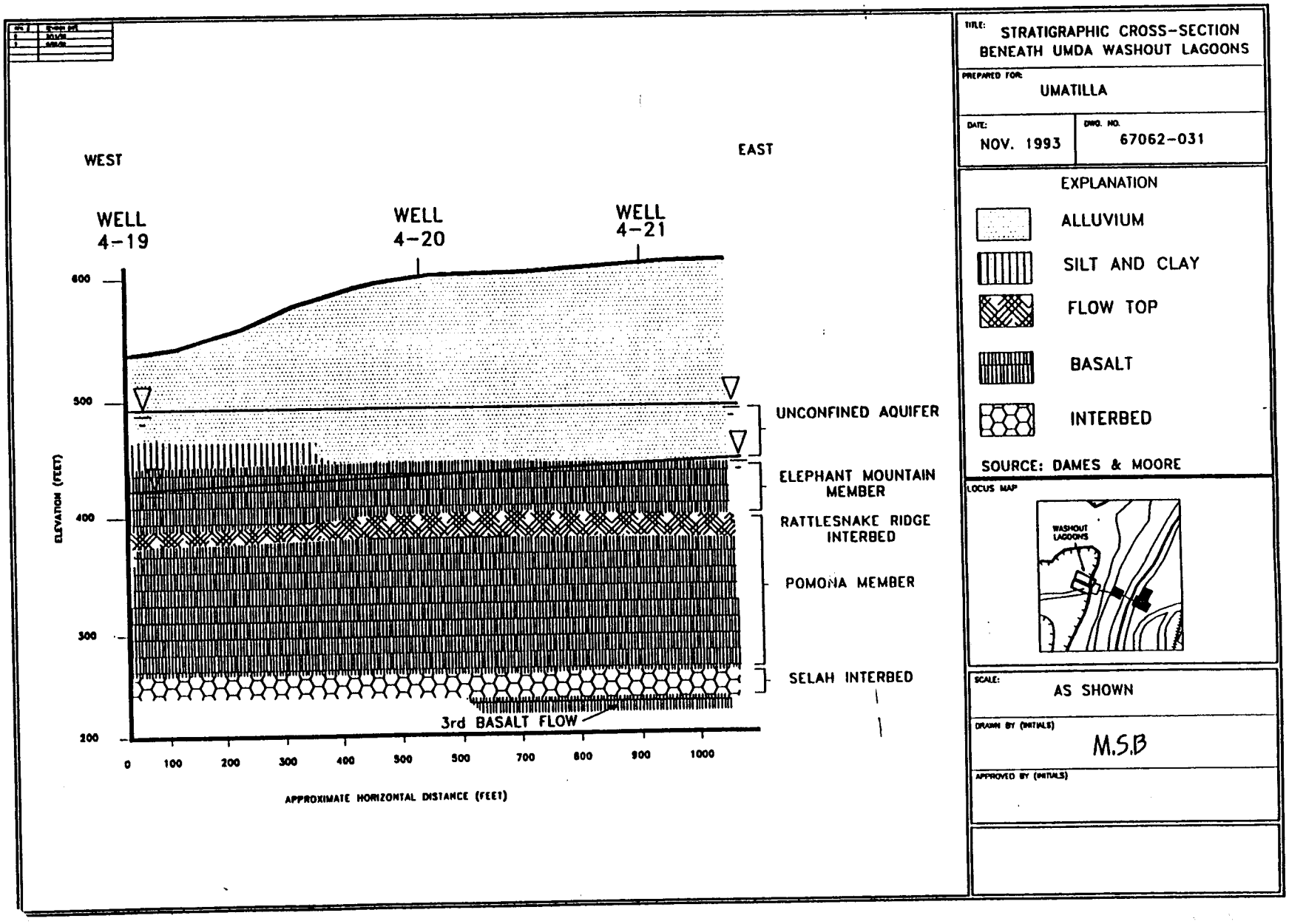

rdb.dmf/aja.67062-29/rd.6/6/94

The unconfined aquifer at UMDA consists of the alluvial deposits and the weathered surface of the Elephant Mountain Member basalt and is overlain by approximately 20 to 125 feet of unsaturated alluvial sand and gravel. At the Explosives Washout Lagoons, the saturated thickness of the entire unconfined aquifer ranges from approximately 15 to 35 feet. This estimate includes only the saturated thickness of the alluvium exclusive of the Elephant Mountain Member. However, water levels in wells installed in the weathered and fractured surface of the Elephant Mountain Member have similar elevations to wells screened in the alluvium, indicating that the flowtop is in direct hydraulic connection with, and is therefore part of, the unconfined aquifer. The exact thickness of the flowtop that is in connection with the unconfined aquifer is unknown and likely varies across the site dependent upon the thickness of the lacustrine deposits and the degree of weathering.

Ground water flow directions in the unconfined aquifer near the lagoons reverse seasonally in response to off-post irrigation pumping and recharge activities. During the summer and early fall, flow is toward the east and south as irrigation activities peak. During the winter and early spring, when irrigation activities are at a minimum, ground water flow is to the north and west. It is probable that, prior to initiation of irrigation in the 1950s and 1960s, the natural direction of flow in the aquifer was to the northwest toward the Columbia River and, in the direct vicinity of the Umatilla River, possibly to the northeast. Currently, because water level declines have occurred in the aquifer, discharge is probably exclusively to irrigation wells. There is likely insufficient head now to drive ground water either into the finer sediments of the northern aquifer or over the top of the finer sediments within the more permeable sediments (which are now dewatered and overlie the finer northern aquifer sediments).

In 1992, an RI of the ground water at the Explosives Washout Lagoons was completed to determine the extent of explosive contamination so that appropriate plans for remediation (cleanup) could be developed. A summary of the contamination in the unconfined aquifer during the RI and Phase II RI program (November 1990 to December 1992) is presented in Table 1 along with comparison criteria. The comparison criteria were developed based on ARARs (e.g., maximum contaminant levels [MCLs], Health Advisories) or risk-based levels that provide a carcinogenic protection of $1x10^{-6}$ or a non-carcinogenic hazard quotient of 1. These levels were then compared to background levels and detection limits. Where the background level or the detection limit was higher than the ARAR or risk-based level, the comparison criteria was set at the background level or the detection limit.

Ground water samples were collected and analyzed during the RI from 30 wells in the upper sandy portion of the unconfined aquifer. The deeper portion of the unconfined aquifer is primarily silty sand and is discussed below. Contamination of explosive compounds was detected in ground water from 18 of the 30 wells. The most common contaminant was RDX, with concentrations ranging from below detection (less than 0.556 µg/L) to 6,816 µg/L (MW-28, February 14, 1991). RDX was detected above its comparison criteria (2.1 µg/L) in 16 of the locations and above 1,000 µg/L in four of the locations. RDX, the most mobile of the contaminants, has the largest plume (Figure 4). From the lagoon source area, the RDX plume extends primarily to the southeast with some elevated concentrations to the northwest. The plume is well delineated to the northeast and southwest where steep chemical concentration gradients are present. It appears that the irrigation-induced ground water flow direction (to the southeast) has a greater effect on contaminant migration than does the natural flow

Table 1: Summary of Contaminants of Concern in the Ground Water at the Explosives Washout Lagoons

	Average (µg/L)	Minimum (µg/L)	Maximum (µg/L)	Comparison Criteria Concentration (µg/L)	Comparison Criteria Type
Explosives					
TNB	119	0.8	441	1.8	Risk-Based
DNB	7.6	0.6	24.4	4.0	Risk-Based
NB	14	13	16	20	Risk-Based
TNT	1,557	0.8	3,900	2.8	Risk-Based
2,4 - DNT	255	0.8	497	0.6	Detection Limit
2,6 - DNT	5.3	5.3	5.3	1.2	Detection Limit
HMX	383	1.9	1,448	350	Health Advisory
RDX	992	2.7	6,816	2.1	Detection Limit
Tetryl	0.8	0.8	0.8	400	Risk-Based
Nitrate	13,330	15	48,000	54,000	Background

Notes:
Average is equal to the average of all detected concentrations.
Minimum is equal to the minimum detected value.

Source: Dames & Moore, 1992b

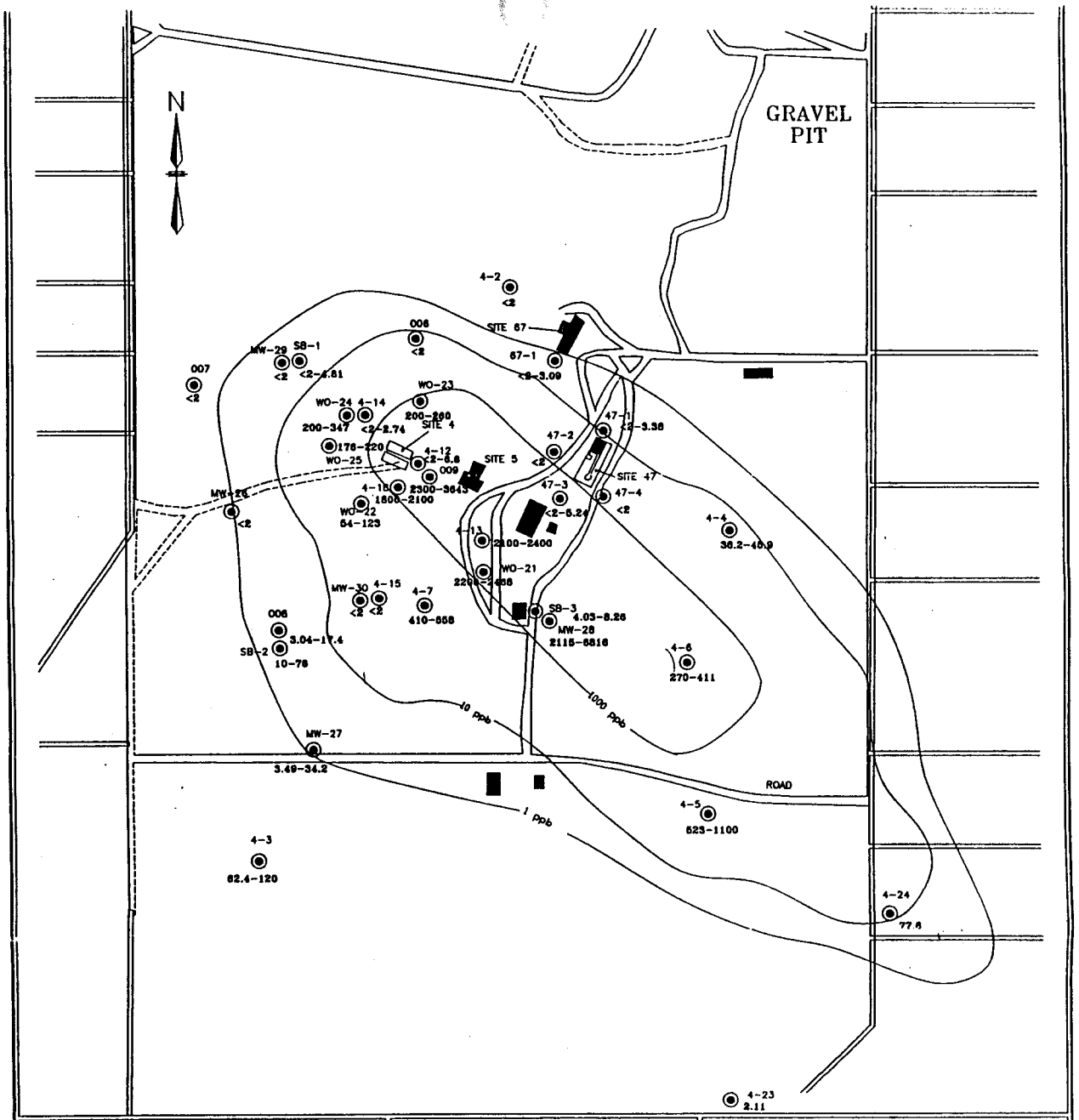

PREPARED FOR:
UMATILLA

DATE: NOV. 1993

DWG. NO.: 67062-020

SCALE: 0 1000 FT.

Unconfined Aquifer Monitoring Wells

1 ppb Modeled Concentration Contour in ppb

200-300 Range of Monitoring Well Actual Concentrations (ppb)

TITLE: **Figure 4**

SIMULATED AND OBSERVED RDX GROUND WATER CONTAMINANT CONCENTRATIONS

direction (to the northwest). The RDX plume represents the extent of migration of the contaminants. Based on that plume the estimated volume of contaminated ground water is 830 million gallons.

Other explosives compounds detected above their comparison criteria include TNB, DNB, HMX, TNT, 2,4-DNT, and 2,6-DNT. Compounds detected below their comparison criteria include tetryl and NB. The other explosives compounds are less mobile than RDX and therefore have more localized plumes. A concentration contour map for TNT is provided in Figure 5 as an example of the less mobile contaminant plumes.

Eleven wells in the upper sandy portion of the alluvial aquifer were sampled for inorganics. Of those wells sampled, all analyses showed that metals were below comparison criteria of either MCLs, EPA Health Advisories, risk-based criteria, or background concentrations. Nitrate/nitrite was found in every ground water sample and the highest concentrations were found in the unconfined aquifer. The nitrate/nitrite concentration in this aquifer ranged from approximately 10,000 µg/L to 40,000 µg/L. While these concentrations exceeded the Safe Drinking Water Act MCL of 10,000 µg/L, they were below the background nitrate concentrations found in off-site wells surrounding the UMDA property. The ground water surrounding UMDA has high levels of nitrates because of the use of fertilizers for agriculture. Due to the high level of nitrates in the surrounding areas, nitrates were not considered a contaminant of concern for the ground water at the Explosives Washout Lagoons.

Of the four wells in the lower silty sand portion of the alluvial aquifer, three had detectable explosives compounds. No explosives were detected in Well 4-15 and no explosives were detected above their comparison criteria in Well 4-12. Well 4-14, located northwest of the source, had RDX slightly above its comparison criterion. Well 4-13, southeast of the source, had both RDX and 2,4-DNT at about their comparison criteria. The highest concentration of explosives in this layer, 2,400 µg/L of RDX, was detected in Well 4-13.

Three wells are installed in the weathered portion of the Elephant Mountain Member. Two (SB-1 and SB-3) contain RDX slightly above the comparison criterion. The highest RDX concentration in this geologic structure was found at SB-2 (76 µg/L), but the concentration was unconfirmed and not found in later rounds of sampling.

Four intermediate wells were installed below the Elephant Mountain Member to determine whether the Rattlesnake Ridge Interbed had been contaminated. The results of the two rounds of sampling showed that all contaminants of concern were below detection limits. Based on the results of this sampling round the Army determined that the Rattlesnake Ridge Interbed was not contaminated and, therefore, did not require remediation. Four wells were also installed into the second basalt aquifer (Selah Interbed). Sampling of these wells found explosives contamination in two of the wells. Because migration of contaminants from the unconfined aquifer to the second basalt aquifer would cause contamination of the uppermost basalt aquifer, and this was not found, well leakage was identified as the cause of the deep aquifer contamination. Additional sampling of the second basalt aquifer wells and use of a video camera to inspect the wells casings confirmed that a low rate of leakage was the cause of the contamination. The leakage of contaminated ground water to the second basalt aquifer will be addressed by removing the two leaking wells.

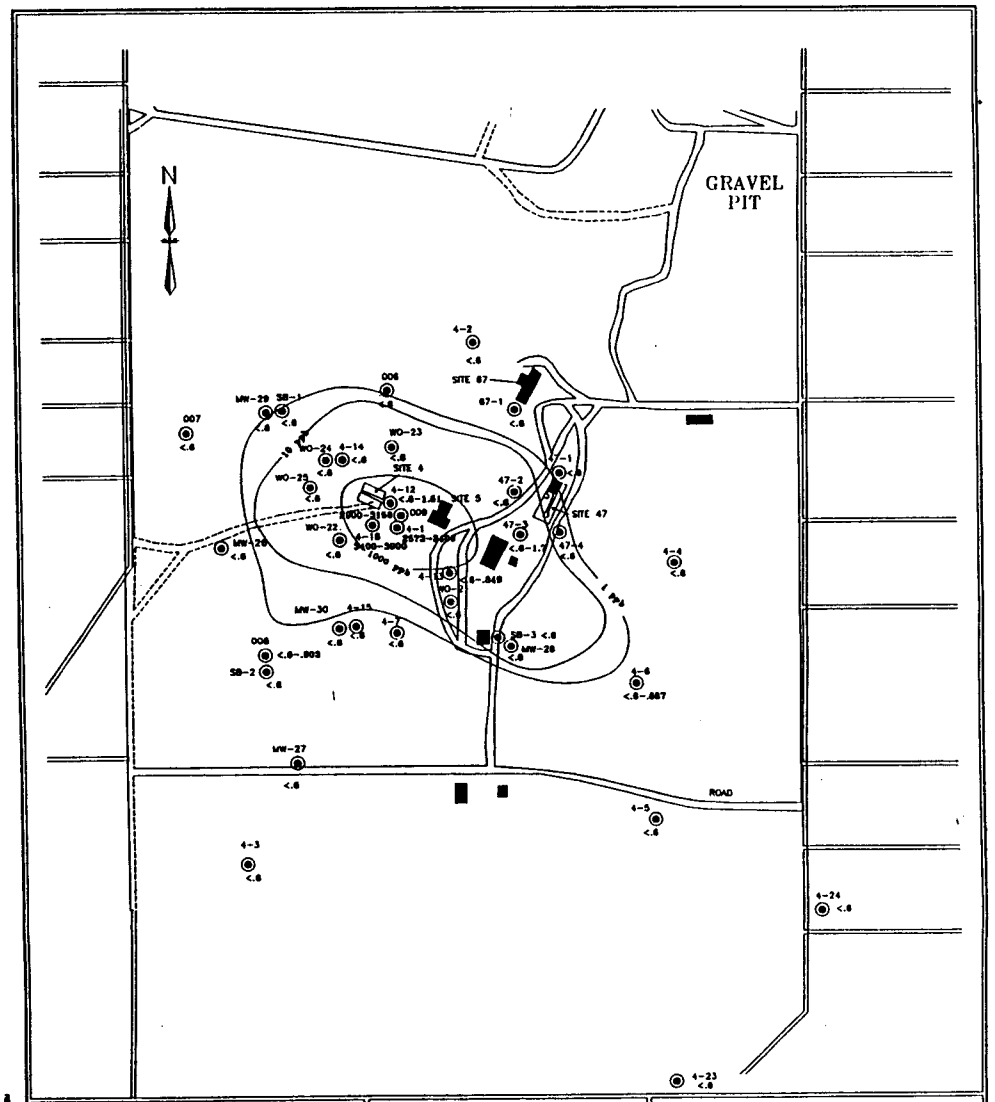

PREPARED FOR:
UMATILLA

DATE: DEC 1993

DWG. NO.: 67062-021

SCALE: 0 1000 FT.

Unconfined Aquifer Monitoring Wells

1 ppb Modeled Concentration Contour in ppb

800-300 Range of Monitoring Well Actual Concentrations (ppb)

TITLE: **Figure 5:**

SIMULATED AND OBSERVED TNT GROUND WATER CONTAMINANT CONCENTRATIONS.

Physical and chemical properties of the explosives are provided in Table 2. In general, the explosives can be characterized as having relatively low aqueous solubility and low volatility. Health effects criteria for the explosives, including carcinogenic data from EPA databases, are presented in Section 2.6.

The major potential route for migration of the explosive contamination is through the subsurface spread of contamination. However, the rate of transport is uncertain due to the seasonal change in the ground water flow direction. Modeling during the FS found that the contamination would reach the south UMDA boundary in approximately 70 years. The modeling also estimated that the contamination would theoretically persist in the aquifer at levels above those protective of human health for 5,000 years.

2.6 Summary of Site Risks

This section summarizes the human health risks and environmental impacts associated with exposure to site contaminants and provides potential remedial action criteria.

2.6.1 Human Health Risks

A Human Health Baseline Risk Assessment (HBRA) was conducted by the Army to estimate the risk posed to human health by the contaminated ground water at the Explosives Washout Lagoons should it remain at its current state with no remediation. The risk assessment consisted of a toxicity assessment, exposure assessment, and human health risk characterization. The toxicity assessment documented the adverse effects that can be caused in a receptor as a result of exposure to a site contaminant. The exposure assessment detailed the exposure pathways (such as ingestion) that exist at the site for various receptors. The risk characterization used both the exposure concentrations and the toxicity data to determine a Hazard Index (HI) for potential non-carcinogenic effects and a cancer risk level for potential carcinogenic contaminants.

The contaminated shallow ground water is currently not used because it is contained within the boundaries of UMDA and UMDA potable water is from deep basalt wells; however, the shallow aquifer is used for both agriculture and domestic use in the area surrounding UMDA. Based on the current use of the aquifer there is no current risk from the ground water contamination, but the future use of the aquifer could potentially be agricultural and domestic. Because of the potential for agricultural and domestic usage of the ground water, the HBRA is based on a residential exposure scenario.

Contaminants of concern in the Explosives Washout Lagoons Ground Water Operable Unit were identified as those explosives detected in water samples collected during the RI. They were:

- TNB
- DNB
- NB
- TNT
- 2,4-DNT
- 2,6-DNT
- RDX
- HMX
- Tetryl

Table 2: Physical and Chemical Properties of the Explosives in Washout Lagoon Ground Water

	TNT	2,4-DNT	2,6-DNT	TNB	DNB	RDX	HMX	Tetryl
CAS Registry No.	118-96-7	121-14-2	606-20-2	99-35-4	99-65-0	121-82-4	2691-41-0	479-45-8
Empirical Formula	$C_7H_5N_3O_6$	$C_7H_6N_2O_4$	$C_7H_6N_2O_4$	$C_6H_3N_3O_6$	$C_6H_4N_2O_4$	$C_3H_6N_6O_6$	$C_4H_8N_8O_8$	$C_7H_5N_5O_8$
Molecular Weight	227.15	182.15	182.15	213.12	168.12	222.15	296.20	287.17
Density (g/cm^3)	1.65	1.521	1.538	1.63	1.575	1.83	1.90 (β form)	1.73
Melting Point (°C)	80.75	72	66	122	90	205	286	129.5
Vapor Pressure (mm Hg, 25°C)	5.51×10^{-6}	2.17×10^{-4}	5.67×10^{-4}	3.03×10^{-6}	1.31×10^{-4}	4.03×10^{-9}	3.33×10^{-14}	5.69×10^{-9}
Aqueous Solubility (mg/L, 25°C)	150	280	206	365	533	60	5	80
Henry's Constant ($atm.m^3/mole$, 25°C)	1.10×10^{-6}	1.86×10^{-7}	4.86×10^{-7}	2.21×10^{-9}	5.44×10^{-8}	1.98×10^{-11}	2.60×10^{-15}	2.69×10^{-11}
Log K_{OW}	2.00	1.98	1.89	1.18	1.49	0.87	0.26	1.65
K (mL/g)	1.00	0.68	0.21	2.23	0.45	0.21	0.44	0.71
R	4.46	3.34	1.72	8.72	2.55	1.73	2.51	3.46
Biological concentration factor (BCF) (fish)	8.95	10.6	9.82	2.65	4.70	1.50	0.49	6.31

Source: Dames & Moore, 1992a

Concentrations for the contaminants of concern are presented in Table 1.

2.6.1.1 Toxicity Assessment. Toxicological profiles were developed for the HBRA and are included in Appendix D of that document. A summary is provided in Table 3. Information on the profiles includes, where available: non-carcinogenic effects and reference doses for oral ingestion and inhalation; carcinogenic effects, slope factors and weights-of-evidence for oral ingestion, dermal absorption, and inhalation; and references.

Reference dose (RfD) values are used to evaluate non-carcinogenic effects. RfDs are derived from "no-observed-adverse-effect levels" (NOAELs), which represent the highest experimental exposure level at which a particular critical toxic effect is not observed. Cancer slope factors (SFs) are used to evaluate potential human carcinogenic risks. A SF is defined as an estimate of the upper 95 percent confidence limit of the slope of the dose-response curve extrapolated to low doses, and is considered to be a measure of the cancer-causing potential of a chemical. RfDs and SFs are provided for both ingestion and inhalation. Toxicity values are obtained from the Integrated Risk Information System (IRIS), the Health Effects Assessment Summary Tables (HEAST), EPA Region III Toxicity criteria, the Public Health Risk Evaluation Database, the Drinking Water Criteria documents, the Ambient Water Quality Criteria documents, the Air Quality Criteria documents, and the Agency for Toxic Substances and Disease Registry (ATSDR) toxicity profiles.

Because of the paucity of toxicity data for TNB, EPA derived an RfD by analogy to DNB. This analogy is considered appropriate and acceptable because of their structural similarity and the fact that TNB is less toxic on an acute basis than DNB. To account for the derivation by analogy, the RfD for TNB incorporates an additional uncertainty factor of 10. The Army has initiated TNB-specific toxicity studies designed to reduce this uncertainty and provide a more definitive estimate of the RfD.

2.6.1.2 Exposure Assessment. Exposure scenarios include a contaminant source, a release or transport mechanism, an exposure pathway by which the contaminant enters the receptor's body, and a potential receptor. The pathways included for quantification of the risk for ground water at the Explosives Washout Lagoons are summarized below:

- Ingestion of contaminated ground water
- Dermal absorption of contaminated ground water during showering
- Consumption of crops irrigated with contaminated ground water

For each of the three pathways, an average daily intake was calculated using a variety of assumptions, i.e, receptor body weight, frequency of exposure, exposure duration, respiration rates, absorption factors, skin surface areas, and ingestion rates. Tables 4 through 6 present the quantitative summary of the daily intake for each pathway. For details regarding which parameters are included in the individual pathways, refer to the HBRA (Dames & Moore, 1992b).

For purposes of calculating daily intake, TNT, RDX, HMX, TNB, and 2,4-DNT ground water concentrations were conservatively assumed to be the maximum concentrations observed during the remedial investigation. Ground water concentrations of the other explosives of concern were assumed to be the 95 percent upper confidence limit on the arithmetic mean of sampling data. Using these concentrations and exposure factors

Table 3: Summary of Toxicity Criteria for the Contaminants of Concern in Washout Lagoons Ground Water

Contaminant of Concern	Slope Factor (mg/kg-day)-1	Source	Weight of Evidence Classification	Cancer Type	Reference Dose (mg/kg-day)	Source	Critical Effect	Uncertainty Factor	Confidence Level
1,3,5-Trinitrobenzene					5.00E-05	IRIS	Increased splenic weight	10,000	low
1,3-Dinitrobenzene					1.00E-04	IRIS	Increased splenic weight	3,000	low
2,4,6-Trinitrotoluene	0.030	IRIS	C	urinary bladder papillomas	5.00E-04	IRIS	Liver effects	1,000	medium
2,4-Dinitrotoluene	0.680	HEAST	B2	liver, mammary gland	6.00E-04	USEPA, 1991c	Hepatic alterations	1,000	low
2,6-Dinitrotoluene	0.680	HEAST	B2	(a)	1.00E-03	USEPA, 1991c	Liver, kidney, neurological, reproductive and hematological effects	3,000	low
HMX					5.00E-02	IRIS	Hepatic lesions	1,000	low
RDX	0.110	HEAST	C	hepatocellular carcinomas and ademomas	3.00E-03	IRIS	Inflammation of prostate	100	high

Sources:

IRIS: Integrated Risk Information System, January 1991
HEAST: Health Effects Assessment Summary Tables, 4th Quarter, September 1990
EPA, 1991c: Risk Assessment Guidance for Superfund, Volume 1: Human Health Evaluation Manual, Supplemental Guidance, Standard Default Exposure Factors

(a) Based on potential carcinogenicity of 2,4-DNT

Table 4: Quantitative Summary of Daily Intake for Ground Water Ingestion

Description:

Ingestion of contaminated drinking water.

Exposure Point Concentration:

95 percent upper confidence limit on the arithmetic mean chemical concentration.

Intake Formula:

$$\text{Intake} = \frac{CC \times IR \times EF \times ED}{BW \times AT}$$

Parameter Definitions and Units:

Intake in (mg/kg-day)
CW = Exposure point chemical concentration in water (mg/l)
IR = Ingestion rate (l/day)
EF = Exposure frequency (days/year)
ED = Exposure duration (years)
BW = Body weight (kg)
AT = Averaging time (days)

Assumptions:

Residential:
IR = 2 l/day (USEPA, 1991b)
EF = 350 days/yr (USEPA, 1991b)
ED = 30 years (USEPA, 1991b)
BW = 70 kg (adult; USEPA, 1991b)
AT = 70 years x 365 days/yr = 25,550 days for carcinogens (USEPA, 1991b)
= 30 years x 365 days/yr = 10,950 days for noncarcinogens (USEPA, 1991b)

Light Industrial:
IR = 1 l/day (USEPA, 1991b)
EF = 250 days/yr (USEPA, 1991b)
ED = 25 years (USEPA, 1991b)
BW = 70 kg (adult; USEPA, 1991b)
AT = 70 years x 365 days/yr = 25,550 days for carcinogens (USEPA, 1991b)
= 25 years x 365 days/yr = 10,950 days for noncarcinogens (USEPA, 1991b)

Military
IR = 1 l/day (USEPA, 1991b)
EF = 250 days/yr (USEPA, 1991b)
ED = 3 years (estimated duration of tour of duty)
BW = 75 kg (USEPA, 1989a)
AT = 70 years x 365 days/yr = 25,550 days for carcinogens (USEPA, 1991b)
= 3 years x 365 days/yr = 1,095 days for noncarcinogens (USEPA, 1991b)

Sample Calculation (2,4,6-TNT):

Residential

$$\text{Intake} = \frac{CW\ (mg/l) \times 2(l/day) \times 350\ (days/year) \times 30\ (years)}{70\ (kg) \times 25{,}550\ (\text{or } 10{,}950((days)}$$

= CW (mg/l) x 1.17E-02 (l-kg/day) (carcinogens)
= CW (mg/l) x 2.74E-02 (l-kg/day) (noncarcinogens)

Source: HBRA (Dames and Moore, 1992b)

Table 5: Quantitative Summary of Daily Intake for Dermal Absorption of Ground Water (page 1 of 2)

Description:

Dermal absorption of contaminants in ground water during non-showering use (e.g., irrigating crops or gardens).

Exposure Point Concentration:

95 percent upper confidence limit on the arithmetic mean chemical concentration.

Intake Formula:

Absorbed dose $= \frac{CW \times SA \times Kp \times EF \times ED}{CF \times BW \times AT}$ (Equation A)

Other Formula Utilized: $\log Kp = -2.72 + (0.71 \times \log K_{OW}) - (0.0061 \times MW)$ (USEPA, 1992b) (Equation B)

Parameter Definitions and Units:

(Equation A) Absorbed dose in (mg/kg-day)

- CW = Exposure point chemical concentration in water (mg/l)
- SA = Skin surface area available for contact (cm2)
- Kp = Chemical-specific dermal permeability constant (cm/hr)
- ET = Exposure time per day (hr/day)
- CF = Conversion factor for volume and mass units (1E+03 cm3/l)
- EF = Exposure frequency (days/year)
- ED = Exposure duration (years)
- BW = Body weight (kg)
- AT = Averaging time (days)

(Equation B)

- K_{OW} = Octanol/water partition coefficient (unitless)
- MW = molecular weight (atomic molecular units)

Assumptions:

Light Industrial: (Equation A)

- SA = 3,200 cm2 (adult upper extremities; USEPA, 1989a)
- Kp = Chemical-specific (see text)
- ET = 30 min/day or 0.5 hr/day (estimated time/workday with hands on use of water source (washing equipment, etc.))
- EF = 250 days/yr (USEPA, 1991b)
- ED = 25 years (USEPA, 1991b)
- BW = 70 kg (adult; USEPA, 1991b)
- AT = 70 years x 365 days/yr = 25,550 days for carcinogens (USEPA, 1991b)
  = 25 years x 365 days/yr = 9,125 days for noncarcinogens (USEPA, 1991b)

Military (Equation A)

- SA = 3,200 cm2 (adult upper extremities; USEPA, 1989a)
- Kp = Chemical-specific (see text)
- ET = 30 min/day or 0.5 hr/day (estimated time/workdday with hands on use of water source (washing equipment, etc.))
- EF = 250 days/yr (USEPA, 1991b)
- ED = 3 years (estimated duration of tour of duty)
- BW = 75 kg (USEPA, 1989a)
- AT = 70 years x 365 days/yr = 25,550 days for carcinogens (USEPA, 1991b)
  = 3 years x 365 days/yr = 1,095 days for noncarcinogens (USEPA, 1991b)

Table 5: Quantitative Summary of Daily Intake for Dermal Absorption of Ground Water (Page 2 of 2)

Farmers and Farm Workers:

(Equation A):

- SA = 3,200 cm2 (adult upper extremities; USEPA, 1989a)
- Kp = chemical specific (see text)
- ET = 30 min/day or 0.5 hr/day (estimated daily average with hands on use of water source) (washing equipment, watering livestock, etc.)
- EF = 365 days/yr (farmer is assumed to work 365 days/yr)
- ED = 40 years (estimated duration of farmer's career)
- BW = 70 kg (USEPA, 1991b)
- AT = 70 years x 365 days/yr = 25,550 days for carcinogens (USEPA, 1991b)
  = 40 years x 365 days/yr = 14,600 days for noncarcinogens (USEPA, 1991b)

All Land Uses:

(Equation B):

- Kow = chemical specific (see text)
- MW = chemical specific (see text

Sample Calculation (2,4,6-TNT) – Farmers and Farm Workers:

(Equation B): log Kp = -2.72 + (0.71 x 2) - (0.0061 x 227.1) = -2.68

Kp = 2.1E-03 (cm/hr)

(Equation A):

$$\text{Absorbed dose} = \frac{\text{CW (mg/l)} \times 3{,}200\ \text{(cm2)} \times 2.1\text{E-03 (cm/hr)} \times 0.5\ \text{(hr/day)} \times 365\ \text{(days/yr)} \times 40\ \text{(yrs)}}{1\text{E+0.3 cm3/l} \times 70\ \text{(kg)} \times 25{,}550\ \text{(or 14,600) (days)}}$$

= Cw (mg/l) x 2.75E-05 (l/kg-day) (carcinogens)

= Cw (mg/l) x 4.79E-05 (l/kg-day) (noncarcinogens)

Source: HBRA (Dames & Moore, 1992b)

Table 6: Quantitative Summary of Daily Intake for Crop Ingestion

Description:

Consumption of crops irrigated by contaminated ground water and/or grown in contaminated soil.

Exposure Point Concentration:

Determined using Equations B and F below, using the 95 percent upper confidence limit on the arithmetic mean chemical concentration.

Intake Formula:

$$\text{Intake} = \frac{CC \times IR \times EF \times ED}{BW \times AT} \quad \text{(Equation A)}$$

Formulas Utilized:

For organics:	CC	= (CS x Ksp) + (CW x Kwp x CF)		(Equation B)
	Ksp	= antilog (1.588-(0.578 log Kow)	(Travis and Arms,1988)	(Equation C)
	Kwp	= Ksp x kd		(Equation D)
	Kd	= antilog (-0.99+(0.53 log Kow)	(Travis et al., 1956)	(Equation E)
For inorganics:	CC	= (CS x UFsp) + (CW x UFwp x CF)		(Equation F)

Parameter Definitions and Units:

(Equation A):	Intake	in (mg/kg-day)
	CC	= Contaminant Concentration in Crop (mg/kg)
	IR	= Ingestion rate of homegrown vegetables (kg/day)
	EF	= Exposure frequency (days/year)
	ED	= Exposure duration (years)
	BW	= Body weight (kg)
	AT	= Averaging time (days)
(Equation B):	CS	= Contaminant concentration in surface soil (mg/kg)
	CW	= Contaminant concentration in water (mg/l)
	Ksp	= Partition coefficient between soil and plants (see Equation C; unitless)
	Kwp	= Partition coefficient between water and plants (see Equation D; unitless)
	CF	= 1/kg
(Equation C):	Kow	= Octanol/water partition coefficient (unitless)
(Equation D):	Kd	= Soil-water partition coefficient (mg/kg in soil per mg/l in water)
(Equation F):	UFsp	= Fresh weight plant uptake factor (unitless)
	UFwp	= Water-to-plant uptake factor (unitless)

Assumptions (Residential):

(Equation A):	IR	= 80 g/day or 0.080 kg/day for homegrown vegetables (USEPA, 1991a)
	EF	= 350 days/yr (USEPA, 1991a)
	ED	= 30 years (USEPA, 1991a)
	BW	= 70 kg (USEPA, 1991b)
	AT	= 70 years x 365 days/yr = 25,550 days for carcinogens (USEPA, 1991b)
		= 30 years x 365 days/yr = 10,950 days for noncarcinogens (USEPA, 1991b)
(Equation C):	Kow	= Chemical specific (see text)
(Equation F):	UFsp	= Chemical specific (see text)
	UFwp	= Chemical specific (see text)

Sample Calculation (2,4,6-TNT):

(Equation C):	Ksp	= antilog (1.588-(0.578 log 100)) = 2.7
(Equation E):	Kd	= antilog (-0.99+(0.53 log 100)) = 1.17
(Equation D):	Kwp	= 2.7 x 1.17 = 3.16
(Equation B):	CC	= (CS x 2.7) + (CW x 3.16)
(Equation A):	Intake	= $\frac{CC\ (mg/kg) \times 0.08\ (kg/day) \times 350\ (days/year) \times 30\ (years)}{70\ (kg) \times 25{,}550\ (or\ 10{,}950((days)}$
		= CC (mg/kg) x 4.7E-04 (1/day) (carcinogens)
		= CC (mg/kg) x 1.1E-03 (1/day) (noncarcinogens)

Source: HBRA (Dames & Moore, 1992b)

obtained from EPA's Risk Assessment Guidance for Superfund, chronic daily intake factors for each chemical within each exposure pathway for a given population at risk were calculated.

2.6.1.3 Risk Characterization. The risk characterization was conducted by combining the toxicological data with the average daily intakes. Potential incremental cancer risks are calculated by multiplying the daily intake averaged over the receptor's lifetime by the SF. Hazard indices are calculated for non-carcinogenic risks by dividing the average daily intake by the RfD. Carcinogenic risks and non-carcinogenic hazard indexes are calculated for each pathway and then summed to yield the total site risk and hazard index.

The two pathways shown in Section 2.6.1.2 were quantitatively evaluated for the risk assessment at Site 4. The resulting hazard indices and risks are summarized in Table 7. For the unconfined aquifer, the total carcinogenic risk is 3×10^{-3} and the total non-carcinogenic hazard index is 30.5.

The risk values reported for consumption of crops are estimated based on both soil and ground water contamination, which resulted in elevated risk estimates when considering only ground water. If crop consumption is eliminated from the total carcinogenic and non-carcinogenic risks, the risk levels decrease. However, even without crop consumption, the site presents risk levels that are outside the acceptable risk range of 10^{-4} to 10^{-6} for carcinogenic risk and greater than 1.0 for the non-carcinogenic hazard index.

2.6.1.4 Uncertainty. Each step of the risk assessment process has some associated uncertainty. The limitations include the adequacy of sampling, data quality, and the assumptions inherent in the modeling of exposure point concentrations. Also included is the uncertainty in toxicity data and exposure assumptions. In the evaluation of the risks at UMDA, the most conservative plausible assumptions were made when faced with uncertainty. Some of the uncertainties and associated conservative assumptions are discussed below. The uncertainties can be found in more detail in Section 7.5 of the HBRA (Dames & Moore, 1992b).

- *Future Land Uses*. One of the main uncertainties concerning the future land uses identified in the HBRA is the likelihood of their actual occurrence near the Explosives Washout Lagoons. The uncertainty here is that the washout lagoon site is located on and near the Coyote Coulee, which would make agriculture and residential uses difficult.

- *Uptake Factors for Crop Consumption Pathway*. Many assumptions are built into the calculation of contaminant levels in crops. The uptake of contaminants is based on models and not actual field tests and in some cases the predicted values may be higher than viable for the growth of crops.

- *Exposure Frequency and Duration Values for Future Land Use*. A number of uncertainties are associated with estimates of how often, if at all, future populations would be exposed to contaminants in the ground water and the period of time over which these exposures would occur.

Table 7: Carcinogenic Risks and Non-carcinogenic Hazards - Future Residential Land Use Scenario

Pathway Description	Carcinogenic Risk (a)	Non-Carcinogenic Risk (b)
Ingestion of Ground Water	3.00E-03	30
Dermal Absorption of Ground Water Contaminants During Showering	2.00E-06	0.5
Totals	3.00E-03	30.5

Notes
(a) - Excess lifetime cancer risks to an individual
(b) - HI (an HI of 1.0 of lower generally indicates that no adverse effects would be expected)

Source: Dames & Moore, 1992b

- *Standard Assumptions*. Standard assumptions used throughout the HBRA (e.g., body weight, drinking water ingestion rates) are based on EPA guidance. These standard assumptions are used to calculate reasonable maximum exposure estimates to obtain risk estimates that are both protective and reasonable. Risks for certain individuals may be higher or lower depending on the values actually applicable to them.

- *Toxicity Information*. General toxicity assessment uncertainties include lack of substantial data on the toxicity of some contaminants, derivation of toxicity values from animal studies, calculation of lifetime cancer risks on the basis of less-than-lifetime exposures, and potential synergistic or antagonistic interaction with other substances affecting the same individuals.

- *Toxicity Information for TNB*. No adequate toxicity or carcinogenicity data exist for TNB. The oral reference dose is based on a subchronic study in the structural analog DNB and is adjusted for molecular weight differences. The uncertainty factor of 10,000 used in the derivation of TNB reference dose includes a factor of 10 for criterion determination by analogy. The Army is currently conducting toxicity tests on TNB to better determine what the toxicity effects are. The results of these studies will be used to reevaluate the risks posed by the ground water and the risk-based cleanup level for TNB.

The uncertainties presented above are propagated through the estimation of risk performed in the risk characterization in a multiplicative fashion. Uncertainties, likewise, are associated with the presentation of total risk values for an exposure zone and scenario:

- Total scenario risks do not reflect potential synergistic or antagonistic effects of complex mixtures.

- Total maximum scenario risks are based on individual analyte risks at the unique location of maximum compound concentration. The method of estimating risk is, therefore, conservative and protective of human health.

- Risks were not quantified for some pathways, consequently, large uncertainty is associated with total site risks.

2.6.2 Environmental Evaluation

Since the contaminated ground water is not easily accessible to any wildlife, it is not expected to present a substantial threat to the local environment. The most likely exposure pathway would be through ingestion of crops that have been irrigated with contaminated ground water. However, EPA, with concurrence from the Army and the State of Oregon, has determined that the crop ingestion pathway is not a likely exposure pathway at the washout lagoons due to the slope and sandy nature of the soils, which generally make the site unusable for agriculture.

2.7 Description of Alternatives

The Army's and EPA's selection of an alternative for the remediation of the Explosives Washout Lagoons Ground Water, as described in this ROD, is a result of a comprehensive evaluation and screening process. An FS was conducted to identify and

analyze the various alternatives considered for addressing the remediation of the site. The FS report for the lagoons ground water describes the alternatives considered, as well as the process and criteria the Army used to narrow the list to four potential remedial alternatives. (For details on screening methodology, see Sections 2 and 4 of the Explosives Washout Lagoons Ground Water FS report [Arthur D. Little, 1993]).

2.7.1 Ground Water Cleanup Levels

The ultimate goal of the cleanup at the Explosives Washout Lagoons is to protect human health and the environment from exposure to contaminated ground water. The cleanup objectives for the ground water are therefore proposed as follows:

- Eliminate or minimize the potential threat to human health and the environment by preventing exposure to ground water contaminants
- Prevent further migration of ground water contamination beyond its current extent
- Restore contaminated ground water to a level that is protective of human health and the environment, as soon as practicable

To meet these objectives, the Army and EPA have selected a ground water pump and treat system to stop the spread of contamination, and site-specific ground water cleanup levels that will be protective of human health and the environment. Cleanup levels have been established in ground water for the contaminants of concern identified in the HBRA to pose an unacceptable risk to human health. The cleanup levels have been set based on the ARARs as available, or other suitable criteria described below. Periodic assessments of the protection afforded by the remedial actions will be made as the remedy is being implemented and at the completion of the remedial action.

Cleanup levels presented in this ROD (Table 8) for known, probable, and possible carcinogenic compounds (Classes A, B, and C) have been established to protect against potential carcinogenic effects and to conform with Human Health Advisories. (EPA Health Advisories were considered as TBC criteria when setting ground water cleanup levels for RDX, TNT, and HMX. The other four explosives did not have health advisories.) Cleanup levels for compounds that are not classified or have no evidence of carcinogenicity (Classes D and E) have been established to protect against potential non-carcinogenic effects and to conform with Human Health Advisories.

In the absence of a Human Health Advisory, a cleanup level was derived for each compound having carcinogenic potential based on a 1×10^{-6} excess cancer risk level per compound, considering the ingestion of and dermal contact with the ground water. In the absence of the above standards and criteria, cleanup levels for all other compounds were established based on a level that represents an acceptable exposure level to which the human population, including sensitive subgroups, may be exposed without adverse effect during a lifetime or part of a lifetime, incorporating an adequate margin of safety (hazard quotient equal to 1) considering the ingestion of and dermal contact with the contaminated ground water.

If a value described by any of the above methods was not capable of being detected with good precision and accuracy, then the practical quantification limit was used for the ground water cleanup level.

Table 8: Remedial Action Criteria for the Ground Water at the Explosives Washout Lagoons

Contaminant of Concern	Remedial Action Criteria (ug/L)	Basis	Level of Risk	Hazard Index
3	1.8	Risk-Based	--	1
DNB	4.0	Risk-Based	--	1
TNT	2.8	Risk-Based	1.00E-06	--
2,4-DNT	0.6	PQL	4.00E-06	--
2,6-DNT	1.2	PQL	5.00E-06	--
HMX	350.0	Health Advisory	--	0.2
RDX	2.1	PQL	3.00E-06	--
	Total Excess Risk		1.30E-05	2.2

PQL = Practical Quantitation Limit

These cleanup levels are consistent with ARARs or suitable TBC criteria for ground water, attain the NCP risk management goal for remedial actions, and are determined to be protective. The risk assessment also showed significant risk for arsenic in ground water. However, arsenic concentrations in the ground water at UMDA were consistent, showing that the concentrations around the washout lagoons are due to regional background. Also the concentrations are below the MCL of 50 µg/L. Therefore, no cleanup is required for arsenic.

All ground water cleanup levels identified in this ROD must be met at the completion of the remedial action at the points of compliance, the edge of the Washout Lagoons. The Army has estimated that these levels will be obtained within 10 to 30 years after startup of the remedial action.

2.7.2 Alternative Descriptions

After screening numerous potential remedial responses (Arthur D. Little, 1993), four remedial alternatives (including no action) were developed for the Explosives Washout Lagoons Ground Water. Variations of two of these alternatives were also evaluated to give a total of six remedial alternatives:

Alternative 1: No Action (Required by law to be considered)
Alternative 2: Institutional Controls (Monitoring and controlled access)
Alternative 3A: UV/Oxidation and Reinfiltration of Treated Ground Water (30 years)
Alternative 3B: UV/Oxidation and Reinfiltration of Treated Ground Water (10 years)
Alternative 4A: Granular Activated Carbon (GAC) and Reinfiltration of Treated Ground Water (30 years)
Alternative 4B: Granular Activated Carbon (GAC) and Reinfiltration of Treated Ground Water (10 years)

The following sections describe the selected remedy (Alternative 4B) and the other alternatives retained for detailed analysis.

2.7.2.1 Alternative 1 – No Action. Both CERCLA and ODEQ regulations require that a "No Action" alternative be evaluated for every site to establish a baseline for comparison. No Action means that no response to contamination is made, activities previously initiated are abandoned, and no further active human intervention occurs.

This alternative assumes that no treatment or restrictions would be placed on the contaminated ground water either now or when UMDA is released to the public. The only reduction in the contamination levels would be through dilution and natural processes and these processes could take as long as 5,000 years to reduce the contaminant concentrations to below the selected cleanup levels. Because this alternative would not restrict ground water flow and would not treat ground water, migration of contaminants would continue. Based on modeling performed in the FS, the contamination would reach the UMDA boundary in approximately 70 years.

The No Action alternative would, however, require five-year reviews intended to evaluate whether the alternative remains protective of public health and the environment.

Costs associated with this alternative would be generated only by five-year reviews.

Capital Cost: None

Operating and Maintenance Cost: $4,000 annually

Total Net Present Value: $81,000

Time for Restoration: estimated 5,000 years

2.7.2.2 Alternative 2 – Institutional Controls. This alternative would place legal restrictions on the installation of wells into the contaminated ground water. The access restriction would be a state or local legal restriction in the study area where contaminated ground water has been found. This legal restriction would have two purposes:

- Land use restriction on the site to prevent future residential development where contaminants in the ground water are at concentrations greater than the cleanup levels.
- Ground water restrictions to prohibit the installation of new wells in the contaminated portion of the alluvial aquifer or the basalt layers underlying the contamination. These restrictions would have to be expanded in the future to include restrictions on the existing ground water wells if any of these wells are found to be contaminated.

The legal restrictions would be maintained until the cleanup levels are met or the site is determined not to pose a threat to human health or the environment. The alternative would also require the continued monitoring of the ground water and five-year reviews.

No treatment or removal of ground water would be included in this alternative. The only reduction in the contamination levels will be through dilution and natural processes, and these processes could take as long as 5,000 years to reduce the contaminant concentrations to below the selected cleanup levels. Because this alternative would not restrict ground water flows and would not treat ground water, migration of contaminants would continue. Based on modeling performed in the FS, the contamination would reach the UMDA boundary in approximately 70 years. Long-term environmental monitoring would be conducted for at least 70 years.

This alternative would be protective of human health in that it would restrict the access to the contaminated portion of the aquifer and would have no adverse short-term impacts because the contaminated portion of the aquifer is not used. However, as the plume continues to migrate it may impact the use of off-site ground water when the contamination reaches the UMDA boundary.

Capital Cost: $20,000

Operating and Maintenance Cost: $40,000 annually

Total Net Present Value: $820,000

Time for Restoration: estimated 5,000 years

2.7.2.3 Alternative 3 – Ultraviolet/Oxidation - 10-Year or 30-Year On-Site Treatment Using UV/Oxidation Followed by Reinfiltration of the Treated Ground Water. In this alternative, the ground water would be extracted from several wells (three wells have been assumed in the FS) over a 30-year (Alternative 3A) or 10-year (Alternative 3B) period to clean up the aquifer to the cleanup levels presented in Table 8, and to stop the spread of the ground water contaminant plume. The 30- and 10- year alternatives differ only in the pumping rates by which the ground water is extracted for treatment. The ground water would be treated by hydroxide precipitation to remove the background metals from the contaminated ground water and then treated by UV/oxidation to destroy the explosives (Figure 6). The results of recent treatability studies indicate that it is not economically feasible to utilize UV/oxidation for complete cleanup. Therefore, granular activated carbon (GAC) with off-site thermal treatment of the spent carbon would be included as a polishing step to the primary UV/oxidation treatment.

After the extracted ground water has been treated and meets all performance standards, based on ground water cleanup levels, a portion of the treated water would initially be pumped to the Explosives Washout Lagoons, where it would be allowed to reinfiltrate into the subsurface soils under the lagoons. The additional treated ground water would be pumped to a reinfiltration gallery 400 to 800 feet upgradient of the lagoons. Reinfiltration of the treated ground water into the subsurface soils would flush the remaining low level soil contamination beneath the lagoons into the ground water, where it would be collected downgradient in the extraction wells. After approximately one year the reinfiltration of all of the treated ground water would be moved to the infiltration galleries.

Institutional Controls. While the ground water is being remediated, institutional controls would be needed to restrict access to the contaminated aquifer, the contaminated ground water remediation equipment, and the interconnecting piping. The access restriction would be a state or local legal restriction in the study area where contaminated ground water has been found. This legal restriction would have three components:

- Access restriction to the site to prevent direct human exposure to contaminants.
- Land use restriction on the site to prevent future residential development where contaminants in the ground water are at concentrations greater than the ground water cleanup levels.
- Ground water restrictions to prohibit the installation of new wells in the contaminated portion of the alluvial aquifer or the basalt layers underlying the contamination.

The legal restrictions would be maintained until the ground water cleanup levels are met or the site is determined not to pose a threat to human health or the environment.

Monitoring. The monitoring program for the Explosives Washout Lagoons ground water has been designed based on the results of the RI and should be modified as the aquifer is remediated. The objective of the program would be threefold:

- To monitor for changes in contaminant concentrations

Figure 6: Conceptual Flow Diagram of UV/Oxidation of Contaminated Ground Water

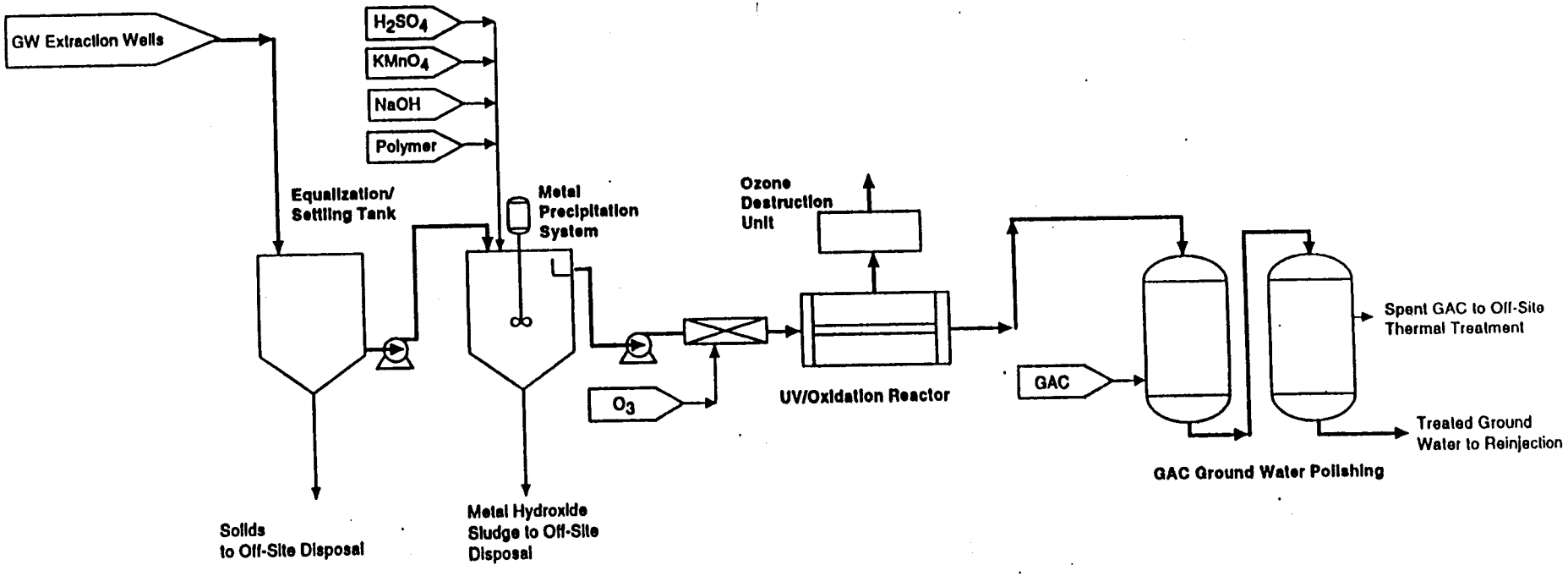

Source: Arthur D. Little,1993

- To ensure that contaminants do not migrate off UMDA or the restricted ground water area in excess of risk-based cleanup levels

- To ensure that the in-situ soil flushing of the lagoons does not cause the ground water contamination to spread

The program would monitor the unconfined aquifer on a semiannual basis for explosives and metals. The sampling frequency would be reduced to annually if the semiannual monitoring results are found to be similar during the first five-year review.

Five-Year Reviews. The objective of the five-year reviews is threefold: (1) to confirm that the remedy as presented in the ROD and/or remedial design remains effective for the protection of human health and the environment (e.g., the remedy is operating and functioning as designed, institutional controls are in place and are protective); (2) to evaluate whether original cleanup levels remain protective of human health and the environment; and (3) to ensure that there is no human contact with the ground water contamination.

For this alternative, the review would focus on both the effectiveness of the GAC system, off-site thermal treatment of the GAC, and the specific performance levels established in the ROD.

The first objective of a five-year review would be accomplished primarily through a review of documented operation and maintenance of the site, a site visit, and limited analysis of site conditions. The second objective requires an analysis of newly promulgated or modified requirements of federal and state environmental laws to determine if they are ARARs and/or if they call into question the protectiveness of the remedy (NCP Section 300.430(f)(1)(ii)(B)(1)). For example, new federal or state MCLs may be promulgated at a more stringent level, calling into question the protectiveness of a ground water preliminary remedial goal set at the risk-based cleanup level. The state would be requested to identify state ARARs promulgated or modified since ROD signature that may have a bearing on the protectiveness of the remedy.

A further objective of the five-year review is to consider the scope of operation and maintenance (O&M) activities, the frequency of repairs, changes in monitoring indicators, costs at a site, and how this relates to protectiveness. If O&M activities either grow unexpectedly over time or are simply much greater than had been estimated at the time of remedy selection, the reviewer would analyze O&M activities and cost increases in an effort to determine if such increases are an early indicator of the deterioration of the remedy. Rising efforts or costs may indicate that excessive attention or activity is required to ensure that a remedy functions properly. This rise might be due to the deterioration or inefficiency of the remedy. In this case, repair or further actions may be necessary to protect against a higher than acceptable potential for remedy failure. Based on such an analysis, the Army and the EPA, in consultation with the state, would consider whether further actions should be taken to reduce increasing O&M activities. As appropriate, the Army may also propose additional response actions to reduce O&M activities or contain rising O&M costs.

Ground Water Extraction. To calculate the rate of ground water extraction and well spacing for the source containment and the aquifer remediation system, the MOC Model was used (see Section 2.3.3, Ground Water Modeling Results, of the FS report [Arthur D. Little, 1993]). The results of the model indicate that three wells with a total

pumping rate of approximately 140 gallons per minute (gpm) for 30 years or approximately 330 gpm for 10 years would be needed to remediate the ground water aquifer to the cleanup levels. The capture zone extends beyond the known contamination and captures the water discharged to the reinfiltration gallery or the washout lagoons.

The ground water pumped from these wells would be collected and pumped via a buried pipeline, to protect against potential freezing problems, into the ground water treatment building. The treatment building would be constructed to protect the processing equipment from adverse weather conditions and to help keep the treatment process at a moderate temperature, which would increase the contaminant removal efficiency.

Over the estimated remediation time of 10 to 30 years, an estimated 1.7 to 2.2 billion gallons of contaminated water would be extracted from the aquifer for treatment. There is some uncertainty associated with meeting the ground water cleanup level with the estimated extraction rate and remediation time because of the adsorption of the contaminants to the aquifer materials. Because there is little historical data to determine how these contaminants will desorb from the aquifer materials, an evaluation of the remedial action will be important during the five-year review in order to ensure that the continuous pumping of the aquifer is the best method of attaining the ground water cleanup levels. At the five-year review, other options such as pulse operation of the extraction wells should be considered if the remedial action is not achieving the anticipated results.

Equalization. The extracted ground water would be pumped to an equalization tank, which would provide at least a 50-minute retention time. The tank will be sized to allow mixing and equalization of the ground water from the extraction wells, thereby ensuring a relatively uniform feed concentration to the treatment equipment. The equalization tank would also be used as a settling tank to remove any solids from the ground water. Any solids that are collected during the remediation would be drummed and analyzed to ensure that they were not a RCRA hazardous waste, and if they are not hazardous, sent to an off-site industrial landfill for disposal. If the solids were found to be a RCRA hazardous waste they would be sent off site for treatment in accordance with RCRA land disposal requirements.

Metal Precipitation. The ground water would be pumped from the equalization tank to the metals precipitation unit for treatment to minimize the potential for fouling the UV lights; this system should also reduce any elevated metal concentrations to below naturally occurring background levels. The metals precipitation process would include an oxidation system, pH adjustment vessel, a stirred reactor, a clarifier to remove precipitated metals, and a multimedia filter to remove any remaining suspended solids. The collected precipitated solids would be dewatered to reduce the volume and to make handling easier. The water from the dewatering operation would be recycled back to the equalization tank. The precipitation system would produce between 0.5 and 1.2 tons/day and an estimated 4,400 to 5,300 tons over the entire remediation.

The dewatered solids from the metal precipitation process will be analyzed to determine if the solids are a RCRA hazardous waste. If they are found to be hazardous they will be disposed of off site in accordance with RCRA land disposal restrictions.

UV/Oxidation. After the metal precipitation system, the pH of the ground water would be adjusted to a value of 6 to 7 and pumped to the UV/oxidation system. The UV/oxidation system would be operated with ozone (O_3) as the oxidant, based upon the results of the Milan Army Ammunition plant treatability study that indicated that hydrogen peroxide is not an effective oxidant for a similar waste stream. For design and costing purposes only, an O_3 system was selected. However, in the remedial design for the ground water at the Explosives Washout Lagoons, the choice of oxidant(s) to use should be based on additional data to be provided as a result of the conduct of the treatability study currently being performed at UMDA.

The O_3 would be added to the extracted ground water stream at an estimated rate of 2 mg/L/min as it passed through the reactor system. The reactors would provide a minimum UV light intensity of 0.07 kw/L of ground water with a residence time of 45 minutes, and would be modular in design. The modular design would allow banks of lights to be shut down as the contaminant loading decreased over time, thus ensuring an economically efficient treatment system for the lifetime of the project. A 90 percent destruction of the total explosives concentration should be achieved using the operating parameters described above. This overall destruction value is limited by the fact that TNT is oxidized to TNB, which then takes a comparable amount of time to be oxidized to harmless constituents. The other compounds present in the contaminated plume have been shown to degrade to water, carbon dioxide, and nitrates within this 45-minute retention time.

The UV/oxidation system would have a cleaning mechanism for the quartz tubes to reduce the fouling of the tubes, which would otherwise reduce the UV emittance. After leaving the UV reactor, the treated ground water would require final polishing by a GAC system to remove residual TNB produced by the oxidation of the TNT. It would not be economical to operate the full-sized UV/oxidation system for TNB removal, as this would require an additional 30 minutes of treatment time, thereby significantly increasing operating expenses. The GAC system will also act as a remedial backup in the event of a UV/oxidation system malfunction.

GAC Polishing. The GAC polishing unit would be two parallel treatment trains consisting of an estimated 2,000-pound carbon beds contained in tanks sized to allow for adequate absorption time. The carbon beds would not be operated until saturation, but rather only until an average 0.07 pounds contaminant per pound GAC loading was achieved. This ceiling on loading is to ensure that the adsorbed contaminant/GAC matrix does not approach its explosive limit and, therefore, would not be considered a RCRA characteristic waste. When test results indicated that the carbon bed is spent, the polishing system would be switched over to the standby bed. The carbon utilization rate is estimated to be between 13 and 30 pounds/day based upon the design flow rate and expected UV/oxidation system effluent concentration. The total carbon use rate for the remediation is estimated to be 55 and 70 tons.

To change the spent carbon, untreated water from the equalization vessel would be used to slurry the column into a hopper. The GAC would be allowed to gravity drain for approximately 24 hours, and would then be screw-fed from the hopper into drums. The water drained from the hopper would be collected and recirculated back to the equalization vessel for treatment.

The drums containing the spent, but non-saturated, carbon would be analyzed to ensure that the explosives level was below 10 percent and that it did not exceed the TCLP limit

for 2,4-DNT. If the carbon passed the analyses, it would be shipped off site for thermal treatment (e.g., incineration, cement kiln, regeneration).

Reinfiltration. After the ground water has been treated and meets all cleanup levels, the water would initially be pumped to the Explosives Washout Lagoons or both the lagoons and an upgradient infiltration gallery, where it would be allowed to reinfiltrate into the aquifer. Reinfiltration of the treated ground water into the lagoons would help flush the remaining soil contamination into the ground water table, where it would be collected downgradient in the extraction wells. The flushing of the soil contamination would take approximately twelve months. The ability to remove the explosives through in-situ flushing is uncertain and would require close monitoring during the remedial action to ensure that the contaminants are not being spread into currently uncontaminated regions. If the contaminants are found to be spreading into uncontaminated regions, then the reinfiltration to the lagoons would be stopped until further options can be evaluated. The in-situ flushing is not a required part of the ground water remedy, since the subsurface lagoons soils required no remediation under the Explosives Washout Lagoons Soil ROD. In-situ flushing is only a cost-effective means of removing additional soil contamination by taking advantage of the required infiltration of the treated ground water.

The infiltration of the ground water into the lagoons would be completed by laying perforated PVC piping in 2 feet of crushed stone at the bottom of the excavated lagoons. A liner would then be placed over the stone and the treated soil from the composting system would be placed on top of the liner. The actual design of this distribution system needs to be investigated further during the remedial design to calculate a percolation rate and ensure that the ground water is evenly distributed over the lagoons and all areas are flushed.

After approximately twelve months, the reinfiltration of the treated ground water would be directed to an infiltration gallery 400 to 800 feet upgradient of the lagoons. There are a number of different types of systems that could be used to provide these infiltration areas. These include such systems as leaching pits, fields, trenches, or galleries. For the purpose of the FS, leaching galleries were selected; however, during the remedial design, one of the other types of systems may be selected. A leaching gallery is a 4 by 4 by 4 foot concrete box with two open ends and perforated sides and bottom. These boxes are linked together into rows that provide both infiltration area and some level of storage if there are fluctuations in the flow rate to the leaching galleries. In sizing the leaching galleries, only the bottom area of the leaching galleries was considered even though there will be some infiltration through the side walls. This provides some extra capacity for the system if the percolation rate is lower than assumed or if additional pumping is required to meet the cleanup levels.

Alternative 3A – 30-year on-site treatment

Capital Cost: $2,100,000

Operating and Maintenance Cost: $770,000 annually

Total Net Present Value: $14,300,000

Time for Restoration: 30 years

Alternative 3B – 10-year on-site treatment

Capital Cost: $3,600,000

Operating and Maintenance Cost: $1,600,000 annually

Total Net Present Value: $16,200,000

Time for Restoration: 10 years

2.7.3.4 Alternative 4: GAC Treatment - 10-Year or 30-Year On-Site Treatment Using GAC Followed by Reinfiltration of the Treated Ground Water. In this alternative, the ground water will be extracted from several wells (three wells have been assumed in the FS) over a 30-year (Alternative 4A) or a 10-year (Alternative 4B) period to remediate the aquifer to the cleanup levels presented in Table 8, and to stop the spread of the ground water contaminant plume. The 30- and 10-year alternatives differ only in the pumping rates by which the ground water is extracted for treatment. The ground water will be treated by GAC to remove the explosives (Figure 7). The spent carbon from the GAC treatment beds would be thermally treated off site.

After the ground water has been treated and meets all the performance standards, based on the ground water cleanup levels, a portion of the treated water will initially be pumped to the Explosives Washout Lagoons, where it will be allowed to reinfiltrate into the soils under the lagoons. The additional treated ground water will be pumped to the reinfiltration gallery 400 to 800 feet upgradient of the lagoons. Reinfiltration of the treated ground water into the lagoons will flush some of the remaining low level soil contamination into the ground water, where it will be collected downgradient in the extraction wells. After approximately one year, the reinfiltration of all of the treated ground water will be moved to infiltration galleries.

Institutional Controls. While the ground water is being remediated, institutional controls will be needed to restrict access to the contaminated aquifer, the contaminated ground water remediation equipment and the interconnecting piping. The access restriction would be a state or local legal restriction in the study area where contaminated ground water has been found. This legal restriction would have three components:

- Access restriction to the site to prevent direct human exposure to contaminants.
- Land use restriction on the site to prevent future residential development where contaminants in the ground water are at concentrations greater than the ground water cleanup levels.
- Ground water restrictions to prohibit the installation of new wells in the contaminated portion of the alluvial aquifer or the basalt layers underlying the contamination. These restrictions would have to be expanded in the future to include restrictions on the existing ground water wells if any of these wells are found to be contaminated in excess of the preliminary remedial goals.

The legal restrictions would be maintained until the ground water cleanup levels are met or the site is determined not to pose a threat to human health or the environment.

Figure 7: Conceptual Flow Diagram of Primary GAC Treatment of Contaminated Ground Water

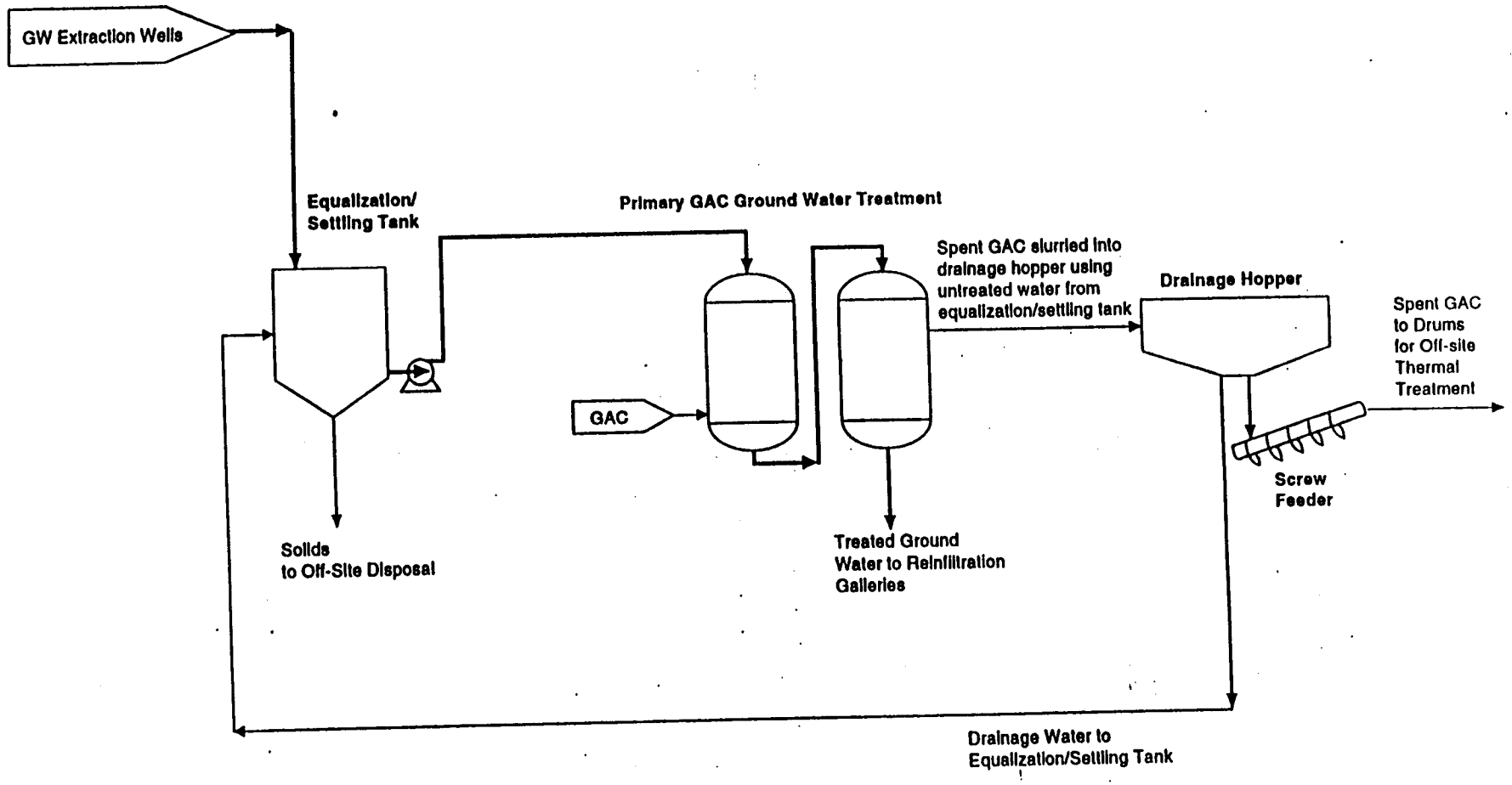

Source: Arthur D. Little,1993

Monitoring. The monitoring program for the Explosives Washout Lagoons ground water has been designed based on the results of the RI and should be modified as the aquifer is remediated. The objective of the program would be threefold:

- To monitor for changes in contaminant concentrations
- To ensure that contaminants do not migrate off UMDA or the restricted ground water area in excess of risk-based cleanup levels
- To ensure that the in-situ soil flushing of the lagoons does not cause the ground water contamination to spread

The program would monitor the unconfined aquifer on a semiannual basis for explosives and metals. The sampling frequency would be reduced to annually if the semiannual monitoring results are found to be similar during the first five-year review.

Five-Year Reviews. The objective of the five-year reviews is threefold: (1) to confirm that the remedy as presented in the ROD and/or remedial design remains effective for the protection of human health and the environment (e.g., the remedy is operating and functioning as designed, institutional controls are in place and are protective); (2) to evaluate whether original cleanup levels remain protective of human health and the environment; and (3) to ensure that there is no human contact with the ground water contamination.

For this alternative, the review would focus on both the effectiveness of the GAC system, off-site thermal treatment of the GAC, and the specific performance levels established in the ROD.

The first objective of a five-year review would be accomplished primarily through a review of documented operation and maintenance of the site, a site visit, and limited analysis of site conditions. The second objective requires an analysis of newly promulgated or modified requirements of federal and state environmental laws to determine if they are ARARs and/or if they call into question the protectiveness of the remedy (NCP Section 300.430(f) (l)(ii)(B)(l)). For example, new federal or state MCLs may be promulgated at a more stringent level, calling into question the protectiveness of a ground water preliminary remedial goal set at the risk-based cleanup level. The state would be requested to identify state ARARs promulgated or modified since ROD signature that may have a bearing on the protectiveness of the remedy.

A further objective of the five-year review is to consider the scope of O&M activities, the frequency of repairs, changes in monitoring indicators, costs at a site, and how this relates to protectiveness. If O&M activities either grow unexpectedly over time or are simply much greater than had been estimated at the time of remedy selection, the reviewer would analyze O&M activities and cost increases in an effort to determine if such increases are an early indicator of the deterioration of the remedy. Rising efforts or costs may indicate that excessive attention or activity is required to ensure that a remedy functions properly. This rise might be due to the deterioration or inefficiency of the remedy. In this case, repair or further actions may be necessary to protect against a higher than acceptable potential for remedy failure. Based on such an analysis, the Army and the EPA, in consultation with the state, would consider whether further actions should be taken to reduce increasing O&M activities. As appropriate, the Army

may also propose additional response actions to reduce O&M activities or contain rising O&M costs.

Ground Water Extraction. To calculate the rate of ground water extraction and well spacing for the source containment and the aquifer remediation system, the MOC Model was used (see Section 2.3.3, Ground Water Modeling Results, of the FS report [Arthur D. Little, 1993]). The results of the model indicate that three wells with a total pumping rate of approximately 140 gpm for 30 years or approximately 330 gpm for 10 years would be needed to remediate the ground water aquifer to the cleanup levels. The capture zone extends beyond the known contamination and captures the water discharged to the reinfiltration gallery or the washout lagoons.

The ground water pumped from these wells would be collected and pumped via a buried pipeline, to protect against potential freezing problems, into the ground water treatment building. The treatment building would be constructed to protect the processing equipment from adverse weather conditions and to help keep the treatment process at a moderate temperature, which would increase the contaminant removal efficiency.

Over the estimated remediation time of 10 to 30 years an estimated 1.7 to 2.2 billion gallons of contaminated water would be extracted from the aquifer for treatment. There is some uncertainty associated with meeting the ground water cleanup level with the estimated extraction rate and remediation time because of the adsorption of the contaminants to the aquifer materials. Because there is little historical data to determine how these contaminants will desorb from the aquifer materials, an evaluation of the remedial action will be important during the five-year review in order to ensure that the continuous pumping of the aquifer is the best method of attaining the ground water cleanup levels. At the five-year review, other options such as pulse operation of the extraction wells should be considered if the remedial action is not achieving the anticipated results

Equalization. The extracted ground water would be pumped to an equalization tank, which would provide at least a 50-minute retention time. The tank will be sized to allow mixing and equalization of the ground water from the extraction wells, thereby ensuring a relatively uniform feed concentration to the treatment equipment. The equalization tank would also be used as a settling tank to remove any solids from the ground water. Any solids that are collected during the remediation would be drummed and analyzed to ensure that they were not a RCRA hazardous waste, and if they are not hazardous, sent to an off-site industrial landfill for disposal. If the solids were found to be a RCRA hazardous waste they would be sent off site for treatment in accordance with RCRA land disposal requirements.

GAC Primary Treatment. The ground water would be pumped from the equalization tank to the GAC primary treatment beds without metals precipitation. The primary treatment carbon absorbers would be sized to reduce the explosive ground water contaminants to cleanup levels without the use of any other treatment.

The GAC polishing unit would be two parallel treatment trains consisting of 2,000-pound carbon beds contained in tanks sized to allow for adequate absorbent time. The carbon beds would not be operated until saturation, but rather only until an average 0.07 pound contaminant per pound GAC loading was achieved. This ceiling on loading is to ensure that the adsorbed contaminant/GAC matrix does not approach its explosive

limit and therefore, would not be considered a RCRA characteristic waste. When test results indicated that the carbon bed is spent, the polishing system would be switched over to the standby bed. Carbon usage is estimated to be between 125 and 310 pounds/day based upon the design flow rate. Total carbon usage for the remedial alternative is estimated as 570 to 680 tons.

To change the spent carbon, untreated water from the equalization vessel would be used to slurry the column into a hopper. The GAC would be allowed to gravity drain for approximately 24 hours, and would then be screw-fed from the hopper into drums. The water drained from the hopper would be collected and recirculated back to the equalization vessel for treatment.

The drums containing the spent, but non-saturated, carbon would be analyzed to ensure that the explosives level was below 10 percent and that it did not exceed the TCLP limit for 2,4-DNT. If the carbon passed the analyses, it would be shipped off site for thermal treatment (e.g., incineration, cement kiln, regeneration).

Reinfiltration. After the ground water has been treated and meets all cleanup levels, the water would initially be pumped to the Explosives Washout Lagoons or both the lagoons and an upgradient infiltration gallery, where it would be allowed to reinfiltrate into the aquifer. Reinfiltration of the treated ground water into the lagoons would help flush the remaining soil contamination into the ground water table, where it would be collected downgradient in the extraction wells. The flushing of the soil contamination would take approximately twelve months. The ability to remove the explosives through in-situ flushing is uncertain and would require close monitoring during the remedial action to ensure that the contaminants are not being spread into currently uncontaminated regions. If the contaminants are found to be spreading into uncontaminated regions, then the reinfiltration to the lagoons would be stopped until further options can be evaluated. The in-situ flushing is not a required part of the ground water remedy, since the subsurface lagoon soils required no remediation under the Explosives Washout Lagoons Soil ROD. In-situ flushing is only a cost-effective means of removing additional soil contamination by taking advantage of required reinfiltration of the treated ground water.

The infiltration of the ground water into the lagoons would be completed by laying perforated PVC piping in 2 feet of crushed stone at the bottom of the excavated lagoons. A liner would then be placed over the stone and the treated soil from the composting system would be placed on top of the liner. The actual design of this distribution system needs to be investigated further during the remedial design to calculate a percolation rate and ensure that the ground water is evenly distributed over the lagoons and all areas are flushed.

After approximately twelve months, the reinfiltration of the treated ground water would be directed to an infiltration gallery 400 to 800 feet upgradient of the lagoons. There are a number of different types of systems that could be used to provide these infiltration areas. These include such systems as leaching pits, fields, trenches, or galleries. For the purpose of the FS, leaching galleries were selected; however, during the remedial design, one of the other types of systems may be selected. A leaching gallery is a 4 by 4 by 4 foot concrete box with two open ends and perforated sides and bottom. These boxes are linked together into rows that provide both infiltration area and some level of storage if there are fluctuations in the flow rate to the leaching galleries. In sizing the leaching galleries, only the bottom area of the leaching galleries was considered even

though there will be some infiltration through the side walls. This provides some extra capacity for the system if the percolation rate is lower than assumed or if additional pumping is required to meet the cleanup levels.

Alternative 4A – 30-year on-site treatment

Capital Cost: $300,000

Operating and Maintenance Cost: $380,000 annually

Total Net Present Value: $6,300,000

Time for Restoration: 30 years

Alternative 4B – 10-year on-site treatment

Capital Cost: $440,000

Operating and Maintenance Cost: $650,000 annually

Total Net Present Value: $5,600,000

Time for Restoration: 10 years

2.8 Summary of Comparative Analysis of Alternatives

Nine criteria are specified by the NCP to evaluate each of the remedial alternatives. The following is a comparison of the alternatives based on the NCP evaluation criteria.

2.8.1 Protection of Human Health and the Environment

Alternatives 3 (UV/Oxidation Treatment) and 4 (GAC Treatment) would permanently reduce the risks posed to human health and the environment by eliminating, reducing, or controlling exposures to human and environmental receptors through treatment. Specifically, each alternative would extract the contaminated ground water from the aquifer and treat the water to meet performance standards, based on ground water cleanup levels. During the 10- to 30-year operating time, the contaminants in the aquifer would be reduced to meet the ground water cleanup levels.

The ability to meet the time frames presented for Alternatives 3 and 4 is dependent on two factors: (1) the ability to extract the contaminants from the aquifer with the ground water due to the adsorption of the contaminants of the aquifer materials; and (2) the ability of the alternative to effectively destroy or remove the contaminants of concern from the ground water.

Upon achieving the ground water cleanup levels for Alternatives 3 and 4, the total hazard index for the ingestion of and dermal contact with ground water for all compounds, at reasonable maximum exposure, would be reduced from 30 to approximately 2. The total incremental cancer risk for the ingestion of ground water for all compounds, at reasonable maximum exposure, would be reduced from 3×10^{-3} to 1.3×10^{-5}.

Both Alternatives 3 and 4 would reinfiltrate the extracted ground water into the aquifer to eliminate the potential for lowering the level of the water table. Reinfiltration galleries or reinjection wells would have to be carefully designed and located to prevent the migration of contaminants away from the extraction wells. In addition, both of these alternatives would include an initial discharge of treated ground water into the washout lagoons to flush the remaining contamination from the soil. Because of the uncertainty surrounding the flushing of the explosive contaminants from the soil into the ground water, a detailed monitoring program would be required in order to ensure the reinfiltration is not spreading the contamination. If the reinfiltration causes an adverse effect on the aquifer, it would be stopped and the water would be sent to the reinfiltration gallerys upgradient.

Alternative 1 (No Action) would not provide any protection of human health and the environment and would not return the aquifer to its beneficial use in a reasonable time frame. The implementation of the alternative would not have any beneficial impact on the environment.

Alternative 2 (Institutional Controls) would be protective of human health in that it would restrict the access to the contaminated portion of the aquifer and would have no adverse short-term impacts because the contaminated portion of the aquifer is not used. However, as the plume continues to migrate it may impact the use of off-site ground water when the contamination reaches the UMDA boundary.

2.8.2 Compliance with ARARs

Alternatives 3 and 4 would meet the TBC Health Advisories for TNT, RDX, and HMX in the ground water in a reasonable time frame of 30 and 10 years, respectively, by extracting, treating and reinjecting the treated ground water back into the aquifer. Alternatives 1 (No Action) and 2 (Institutional Controls) will take approximately 5,000 years to meet the preliminary remediation goals and return the ground water in the region to its beneficial use.

Alternative 1 does not have any action-specific ARARs because no remedial action would be taken under these alternatives. Alternatives 2, 3, and 4 would each meet the ARARs, including:

- The ground water treatment systems for the alternatives would treat the ground water in order to achieve the EPA Health Advisories for TNT, RDX, and HMX.

- The reinfiltration of the treated ground water would meet the state surface water discharge or underground injection regulations on the disposal of the treated ground water.

- The spent carbon from the GAC units would be tested to ensure that the carbon was not a RCRA reactive characteristic waste (explosives concentration greater than 10 percent) or a toxic characteristic waste (exceedence of the limit for 2,4-DNT in the TCLP). If the carbon is determined to be a characteristic RCRA waste it will be sent off site and incinerated at a RCRA-approved facility. If the carbon is not a characteristic RCRA waste it will be treated off site at a thermal treatment facility (e.g., incinerator, cement kiln, regeneration facility).

- The metal hydroxide sludge will be tested using the TCLP to determine if the sludge is a RCRA toxic characteristic waste. If the sludge fails the TCLP, it will be

solidified prior to disposal in a hazardous waste landfill. If the sludge passes, it will be disposed of off site in an industrial landfill.

- All facilities considered for off-site treatment of residuals from Alternatives 3 and 4 would meet the NCP Procedures for *Planning and Implementing Off-Site Response Actions* as presented in the September 22, 1993 Federal Register, 58 FR49200.

RCRA listed waste categories K045 and K047 are not appropriate for three reasons: (1) they are not from the manufacture of explosives, (2) they are below the waste characteristics level for which K045 and K047 were listed (reactivity), and (3) they result from the treatment of ground water instead of wastewater. Specifically, K045 covers spent carbon from the treatment of explosives-contaminated wastewaters (40 CFR § 261.32). The extracted ground water is not considered a wastewater and therefore the carbon generated in either Alternative 3 or 4 would not be considered a K045 waste. As indicated above, the carbon would be considered a RCRA reactive characteristic waste (40 CFR § 261.23) if the explosive concentration on the carbon exceeded 10 percent or a toxicity characteristic RCRA waste (40 CFR § 261.24) if a TCLP analysis indicates a 2,4-DNT concentration equal to or greater than 0.13 mg/L.

The RCRA waste category K047 is not relevant to the ground water because it applies to wastes generated during the production and formulation of TNT and TNT-containing products (40 CFR § 261.32). The operations at the Explosives Washout Plant did not involve the manufacture, loading, or packing of explosives, nor the production and formulation of TNT compounds. Therefore, the wastes from the Explosive Washout Plant including the contaminated ground water do not meet the definition of listed wastes and the RCRA requirements, therefore, are not legally applicable.

2.8.3 Long-Term Effectiveness

Alternatives 3 and 4 would reduce the contamination in the ground water to below ground water cleanup levels in a time frame of either 30 (3A and 4A) or 10 (3B and 4B) years. The ability to meet the time frames presented in these alternatives is dependent on two factors: (1) the effect that the contaminants adsorbed onto the aquifer materials has on the ability to extract the contaminants from the aquifer with the ground water; and (2) the ability of the alternative to effectively destroy or remove the contaminants of concern from the ground water.

Upon achieving the remedial action objectives for Alternatives 3 and 4, the total hazard index for the ingestion of and dermal contact with ground water for all compounds, at reasonable maximum exposure, would be reduced from 30 to less than 2; and the total incremental cancer risk for the ingestion of ground water for all compounds at reasonable maximum exposure would be reduced from 3×10^{-3} to 1.3×10^{-5}. The reduction in the risks would meet the NCP requirement for excess risk. In all cases, the remaining risks would be due to the remaining explosive contamination.

Alternatives 1 and 2 would provide almost no long-term effectiveness because the contaminants would continue to migrate toward the UMDA boundary.

Alternatives 3 and 4 would produce treatment residuals that would have to be treated and disposed of off site. All residuals generated during the remediation of the ground water would be disposed of in a manner to eliminate unacceptable risks.

- Alternative 3 would generate two types of treatment residuals, metal hydroxide sludge and spent carbon loaded with explosives and their degradation compounds. Over the life of the remediation an estimated 4,400 to 5,300 tons of metal hydroxide sludge would be produced and 55 to 70 tons of explosives-contaminated carbon would be generated.

- Unlike Alternative 3, Alternative 4 would only generate one type of treatment residual, spent carbon loaded with explosives and their degradation compounds. Over the life of the remediation an estimated 570 to 680 tons of explosives-contaminated carbon would be generated.

The metal hydroxide sludge from the metal precipitation unit would be tested using the TCLP method to determine if it was a RCRA hazardous waste. If the sludge failed the TCLP test, it would be sent off-site for solidification prior to be disposed of in a landfill. If the sludge passed the TCLP it would be disposed of in an industrial waste landfill.

The spent carbon from the GAC units would be tested to ensure that the carbon was not either a RCRA reactive characteristic waste (explosives concentration greater than 10 percent) or a toxic characteristic waste (exceedence of the limit for 2,4-DNT in the TCLP). If the carbon is determined to be a characteristic RCRA waste it will be sent off-site and thermally treated at a RCRA approved facility. If the carbon is not a characteristic RCRA waste it will be treated off site at a thermal treatment facility (e.g., incinerator, cement kiln, regeneration facility).

All four alternatives would require five-year reviews to evaluate whether the alternative remains protective of public health and the environment. The five-year reviews would be initiated five years after the start of the remedial action and would continue only until the cleanup levels are met, since these levels allow for unrestricted use of the aquifer.

2.8.4 Reduction of Toxicity, Mobility, or Volume through Treatment

Alternatives 1 and 2 would allow the contaminated region to naturally attenuate. The natural attenuation would not reduce the toxicity, mobility, or volume of the contamination by treatment; however, the reduction of the contamination would occur by natural means (biological, abiotic, and diffusion) over a 5,000-year period. During this period the contaminants would continue to migrate towards the UMDA boundary, and the RDX plume is estimated to reach the boundary in 70 years at a concentration that would pose an incremental carcinogenic risk of 1×10^{-6}.

In Alternative 3, the UV/oxidation system would remove approximately 90 percent of the contamination from the extracted ground water, based on pilot-scale treatability studies cited in the FS and an economic analysis. The remaining contaminants would be adsorbed using the GAC polishing system.

The UV/oxidation system would irreversibly destroy the contaminants directly by oxidizing the organics to carbon dioxide, water, and nitrates. The residual contaminants would adsorb onto the GAC. The contamination adsorbed on the GAC would then be irreversibly destroyed by thermal treatment at an off-site facility.

In Alternative 4, the primary GAC treatment system would remove greater than 99 percent of the contamination from the extracted ground water, based on previously

conducted adsorption studies cited in the FS. The adsorbed contaminants would be irreversibly destroyed when the spent GAC is incinerated or treated using another type of thermal treatment such as regeneration or a cement kiln.

2.8.5 Short-Term Effectiveness

The operations of Alternatives 3 and 4 are not expected to increase the risk to the community since no contaminants will be released to the environment. The risks to the workers and environment from using the acids, bases, and the ozone would be minimized through the use of engineering controls and personal protective equipment.

Alternatives 3 and 4 will achieve long-term effectiveness in the ground water in the reasonable time frame of 30 and 10 years, by extracting, treating and reinjecting the treated ground water back into the aquifer. Alternatives 1 and 2 would take approximately 5,000 years to meet the long-term objective of returning the ground water in the region to its beneficial use.

Alternatives 3 and 4 would produce treatment residuals that would have to treated and disposed of off site. All residuals generated during the remediation of the ground water would be disposed of in a manner to eliminate unacceptable risks.

- Alternative 3 would generate two types of treatment residuals, metal hydroxide sludge and spent carbon loaded with explosives and their degradation compounds. Over the life of the remediation an estimated 4,400 to 5,300 tons of metal hydroxide sludge would be produced and 55 to 70 tons of explosives-contaminated carbon would be generated.

- Unlike Alternative 3, Alternative 4 would only generate one type of treatment residual, spent carbon loaded with explosives and their degradation compounds. Over the life of the remediation an estimated 570 to 680 tons of explosive contaminated carbon would be generated.

The metal hydroxide sludge from the metal precipitation unit would be tested using the TCLP method to determine if it was a RCRA hazardous waste. If the sludge failed the TCLP test, it would be sent off site for solidification prior to be disposed of in a landfill. If the sludge passed the TCLP it would be disposed of in an industrial waste landfill.

The spent carbon from the GAC units would be tested to ensure that the carbon was not either a RCRA reactive characteristic waste (explosives concentration greater than 10 percent) or a toxic characteristic waste (exceedence of the limit for 2,4-DNT in the TCLP). If the carbon is determined to be a characteristic RCRA waste it will be sent off-site and thermally treated at a RCRA approved facility. If the carbon is not a characteristic RCRA waste it will be treated off site at a thermal treatment facility (e.g., incinerator, cement kiln, regeneration facility).

2.8.6 Implementation

All of the technologies that would be used in these alternatives are considered reliable. However, the UV/oxidation pilot study for Milan Army Ammunition Plant cited in the FS found that UV/oxidation could not economically meet cleanup levels without GAC being used as a polishing unit.

The construction and operation of the UV/oxidation system for Alternative 3 can be implemented with few concerns and is technically capable of treating the contaminants in the ground water. The specific concerns regarding UV/oxidation are (1) the fact that UV/oxidation has never been used on a full-scale for the treatment of explosives-contaminated ground water; and (2) the maintenance of UV systems is known to be high, especially with regard to the fouling of quartz light tubes and the changing of the UV lamps.

The construction and operation of the GAC system for Alternative 4 would be easier than the UV/oxidation system. GAC systems are commonly used at Army facilities for the treatment of wastewaters containing explosives and have been found to be highly reliable. Therefore, unlike UV/oxidation there are substantial full-scale operating data for GAC systems.

The processing capacity of both Alternatives 3 and 4 can be increased if additional ground water needs to be treated or the concentration of contamination is greater than expected. No special equipment, materials, or technical specialists would be required for the implementation of these remedial alternatives.

Alternatives 3 and 4 would require state and local coordination for the implementation of legal restrictions on the use of ground water at the site.

2.8.7 Cost

The capital and operating costs for each alternative are shown below:

Alternative	Capital Cost	Operating Cost	Total NPV
1	—	$4,000	$81,000 (a)
2	$20,000	$40,000	$820,000 (a)
3A	$2,200,000	$790,000	$14,700,000 (b)
3B	$3,700,000	$1,600,000	$16,300,000 (c)
4A	$400,000	$380,000	$6,400,000 (b)
4B	$550,000	$670,000	$5,800,000 (c)

(a) Total NPV estimated over 5000 years at an interest rate of 5%
(b) Total NPV estimated over 30 years at an interest rate of 5%.
(c) Total NPV estimated over 10 years at an interest rate of 5%.

2.8.8 State Acceptance

The State of Oregon has reviewed and approved this document and the proposed alternative.

2.8.9 Public Acceptance

The absence of any negative comments from the public has been taken as acceptance of the proposed alternative.

2.9 Selected Remedy

The selected remedy to clean up the soil contamination associated with the UMDA Explosives Washout Lagoons, Ground Water Operable Unit is Alternative 4B, 10-year on-site treatment using GAC treatment followed by reinfiltration of the treated ground water. This alternative was selected because it is protective, feasible, and cost-effective. Alternative 4B was selected over the other alternatives because it actively remediates the contaminated ground water in a time frame that is equal to or better than the other alternatives at a cost that is less than the other active remedial alternatives.

The estimated net present value of Alternative 4B is estimated to be $5,800,000. GAC treatment is a well established, proven technology for ground water. Even though this remediation step does not provide for the immediate destruction of the contaminants, off-site treatment through thermal destruction will be provided. An estimated 1.75 billion gallons of water would be treated with this remediation option.

The major components of the alternative are:

- Extraction of the ground water from an estimated three extraction wells over an estimated 10- to 30-year period
- Treatment by GAC to meet performance standards based on the ground water cleanup levels
- In-situ flushing of subsurface soils beneath the lagoons with all or part of the treated ground water for an estimated period of one year
- Upgradient reinjection of the treated ground water that does not go to the Explosives Washout Lagoons and all the treated water after the in-situ soil flushing is completed
- Testing of the spent GAC to determine RCRA characteristic hazardous waste status
- Off-site thermal treatment and disposal of explosive contaminated GAC to the level specified in the remedial design (off-site thermal treatment will be in compliance with the EPA Off Site Rule)
- Monitoring of ground water contamination to determine the effectiveness of the remedial action and to determine when the ground water cleanup levels have been attained
- Institutional controls on the contaminated ground water to prevent the use of the ground water until ground water cleanup levels are met

The remediation of the ground water will continue until the concentration of explosives in the aquifer meets cleanup levels that are protective of human health and the environment. Because no ARARs currently exist for the explosive contaminants, risk-based cleanup levels were calculated to protect against carcinogenic risks in excess of 1×10^{-6} and non-carcinogenic risks with a hazard quotient greater than 1. Lifetime Human Health Advisories were considered TBC criteria and were also used to set cleanup levels. The performance standards for the treatment of the extracted ground water were set in the same manner as the cleanup levels for the aquifer.

A limit of 10 percent explosives on the GAC sent off site was set in order to ensure that the GAC would not be a characteristic RCRA hazardous waste for reactivity. The 10 percent limit was set based on a USAEC study (Arthur D. Little, 1987) to determine reactivity of explosives-contaminated sludges. The spent GAC would also have to pass a TCLP test for 2,4-DNT in order not to be considered a RCRA hazardous waste. The actual performance standards for the off-site thermal treatment of the explosives-contaminated GAC would be determined during the remedial design; however they would be based on either a residence time and temperature or a chemical-specific cleanup level for the residuals that are below risk-based remedial action criteria.

In order to ensure that the off-site thermal treatment does not contribute to present or future environmental problems, the selection of a thermal treatment facility will follow the procedures presented in *Procedures for Planning and Implementing Off-Site Response Actions*, 58 FR 49200, September 22, 1993.

The goal of this remedial action is to restore the ground water to its potential beneficial use, which may include drinking water or non-domestic uses. Based on the information obtained during the RI, and the analysis of all remedial alternatives, the Army, EPA, and the State of Oregon believe that the selected remedy may be able to achieve this goal. Ground water contamination may be especially persistent in the immediate vicinity of the contaminants' source, where the concentrations are relatively high. The ability to achieve cleanup levels at all points throughout the area of attainment, or plume, cannot be determined until the extraction system has been implemented, modified as necessary, and plume response monitored over time.

The selected remedy will include ground water extraction for an estimated period of 10 to 30 years, during which time the system's performance will be carefully monitored on a regular basis and adjusted as warranted by the performance data collected during operation. Modifications may include any or all of the following:

- Discontinuing pumping at individual wells where cleanup levels have been attained
- Alternating pumping at wells to eliminate stagnation points
- Pulse pumping to allow aquifer equilibration and encourage adsorbed contaminants to partition into the ground water
- Installation of additional extraction wells to facilitate or accelerate cleanup of the contaminant plume

To ensure that cleanup levels continue to be maintained, the aquifer will be monitored at least annually at those wells where pumping has ceased.

2.10 Statutory Determinations

The remedial action selected for implementation for the Explosives Washout Lagoons Ground Water Operable Unit is consistent with CERCLA and, to the extent practicable, the NCP. The selected remedy is protective of human health and the environment, attains ARARs and is cost-effective. The selected remedy also satisfies the statutory preference for treatment that permanently and significantly reduces the mobility, toxicity, or volume of hazardous substances as a principal element. Additionally, the

selected remedy utilizes alternate treatment technologies or resource recovery technologies to the maximum extent practicable.

2.10.1 Protection of Human Health and the Environment

The remedy at this site will permanently reduce the risks posed to human health and the environment by eliminating, reducing, or controlling exposures to human and environmental receptors through treatment, engineering controls, and institutional controls. Specifically, Alternative 4B would extract the ground water from the aquifer and treat the contaminated ground water using a GAC system. The performance standards for the GAC system would be equivalent to the cleanup levels selected for the aquifer. The treated ground water would be allowed to reinfiltrate into the aquifer. The extraction of the ground water would also minimize the migration of the contaminants, and institutional controls would restrict the use of the aquifer while the remedial action was being conducted.

Moreover, the selected remedy will achieve potential human health risk levels that attain the 1×10^{-4} to 1×10^{-6} incremental cancer risk range and a level protective of non-carcinogenic endpoints, and will comply with ARARs and TBC criteria. Upon achieving the remedial action objectives, the total hazard index for the ingestion of ground water for all compounds, at reasonable maximum exposure, would be reduced from 30 to 2. The total incremental cancer risk for the ingestion of ground water for all compounds at reasonable maximum exposure would be reduced from 3×10^{-3} to 1.3×10^{-5} (see Section 2.6, Summary of Site Risks).

When ground water cleanup levels identified in this ROD and newly promulgated ARARs and modified ARARs, have been achieved and have not been exceeded for a period of three consecutive years, the remedy will be considered complete.

2.10.2 Compliance with ARARs

This remedy will attain all applicable or relevant and appropriate federal and state requirements that apply to the site. Environmental laws from which ARARs for the selected remedial action are derived and the specific ARARs include:

- Resource Conservation and Recovery Act
- Oregon Hazardous Substance Remedial Action Rules
- Oregon Underground Injection Regulations
- Oregon Water Resources Administration and Appropriation Acts (ORS Chapters 536 and 537)
- Oregon Water Supply Well Construction and Maintenance Regulations (OAR Chapter 690, Division 200)
- Oregon Water Quality Statutes for Ground Water (ORS Chapter 468B.150 through 468B.185)

In addition to these ARARs the EPA's Health Advisories are considered as TBC criteria.

2.10.2.1 Resource Conservation and Recovery Act. RCRA is applicable to the spent carbon that is generated during the treatment of the ground water at the site if the carbon is found to be a RCRA reactive characteristic waste or a toxic characteristic waste. Specifically, The spent carbon will be tested to determine if the explosives contamination exceeds 10 percent, which is the limit for the carbon to be considered a RCRA reactive characteristic waste. A TCLP analysis will also be performed on the

spent carbon to determine if the 2,4-DNT concentration exceeds 0.13 mg/L in the TCLP extract, which is the limit for a RCRA toxic characteristic waste. If the spent carbon is found to be a characteristic waste then it will be managed as a RCRA waste and sent off-site to a RCRA-approved thermal treatment facility (e.g., incinerator, cement kiln, regeneration facility).

RCRA listed waste categories K045 and K047 are not considered ARARs for the remediation of ground water at the washout lagoons because they are not relevant. Specifically, K045 covers spent carbon from the treatment of explosives-contaminated wastewaters (40 CFR § 261.32). The extracted ground water is not considered a wastewater and therefore the carbon generated in either Alternatives 3 or 4 would not be considered a K045 waste. As indicated above, the carbon would be considered a RCRA reactive characteristic waste (40 CFR § 261.23) if the explosives concentration on the carbon exceeded 10 percent or a toxicity characteristic RCRA waste (40 CFR § 261.24) if a TCLP analysis has 2,4-DNT concentration equal to or greater than 0.13 mg/L.

The RCRA waste category K047 is not relevant to the ground water because it applies to wastes generated during the production and formulation of TNT and TNT-containing products (40 CFR § 261.32). The operations at the Explosives Washout Plant did not involve the manufacture, loading, or packing of explosives, nor the production and formulation of TNT compounds. Therefore, the wastes from the Explosive Washout Plant including the contaminated ground water do not meet the definition of listed wastes and the RCRA requirements and, therefore, are not legally applicable.

2.10.2.2 Oregon Hazardous Substance Remedial Action Rules. The Oregon Hazardous Substance Remedial Action Rules is an applicable regulation for the ground water at the Explosives Washout Lagoons. The Act provides a process for determining contaminant cleanup levels on a site-specific basis. The process is implemented as follows:

- In the event of a release of a hazardous substance, the environment shall be restored to background level (i.e., the concentration naturally occurring prior to any release from the facility) [OAR 340-122-040(2)(a)].

- When attaining background level is not feasible, the acceptable cleanup level in ground water shall be the lowest concentration level that satisfies both the "protection" and "feasibility" requirements in OAR 340-122-090(1). The party responsible for the contaminated site is responsible for demonstrating the non-feasibility of attaining background level.

Of the seven explosives contaminants of concern in the Explosives Washout Lagoon Ground Water Operable Unit, none are considered to be naturally occurring. Therefore, the background concentration would be essentially zero or, for practical purposes, below detection limits.

The cleanup levels for the explosives, 2,4-DNT, 2,6-DNT, and RDX, are set at detection limits and will therefore meet the intent of the regulation. The cleanup levels for TNB, DNB, TNT, and HMX are set above their detection limits. The cleanup levels for TNB, DNB, and TNT were set at a level that was protective of human health based on achieving a non-carcinogenic hazard quotient of 1 for each and an excess carcinogenic risk of 1×10^{-6}. The cleanup level for HMX was set based on the EPA

health advisory for HMX which is 350 µg/L. The health advisory is set based on the protection of human health over a lifetime and is therefore considered to meet the requirements of the regulation. Since the cleanup levels set above background will achieve risk-based goals, the additional effort to reach background is not considered cost-effective.

2.10.2.3 Oregon Underground Injection. OAR Chapter 340, Division 44 is also an applicable state ARAR specific to the reinfiltration of treated ground water back into the aquifer. These regulations will influence the location, construction, and use of any underground injection wells so as to prevent contamination of the underground sources of drinking water. Specifically, OAR 340-44-015(4)(d) specifies that underground injection activities that allow the movement of fluids into an underground source of drinking water (e.g., the ground water at Site 4) may not violate any SDWA MCLs.

The explosives in the ground water do not currently have SDWA MCLs; therefore, remediation of these compounds to levels that are protective of human health and the environment would meet the intent of the regulation. Nitrates were found in the ground water at UMDA at a level above the MCL of 10 mg/L. The source of the nitrate is not UMDA but off-site agricultural activities. The selected remedy would not treat the ground water to meet the MCL for nitrate because it is considered to be an off-site contaminant. While this does not meet the requirement of the regulation, ODEQ has agreed to waive the requirement for compliance with the MCL specific to nitrate if the treated ground water is reinfiltrated within the capture zone of the ground water extraction wells. Both the discharge to the lagoons and the upgradient reinfiltration galleries will, therefore, be designed to be within the capture zone of the extraction wells.

2.10.2.4 Health Advisories. EPA Health Advisories were considered as TBC criteria when setting ground water cleanup levels for RDX, TNT, and HMX. The other four explosives did not have health advisories. The health advisories were obtained from the December 1993 Drinking Water Standards. The health advisories were compared to the calculated risk-based cleanup levels and where the health advisories were significantly lower than the risk-based cleanup level the health advisory was used as the ground water cleanup level. The health advisories for both RDX and TNT were higher than the risk-based cleanup levels. The HMX health advisory was lower than the risk-based cleanup level; therefore, the ground water cleanup level for HMX was set at the health advisory level.

2.10.3 Cost

In the judgment of the Army and EPA, the selected remedy is cost-effective, i.e., the remedy affords overall effectiveness proportional to its costs. In selecting this remedy, once the Army and EPA identified alternatives that are protective of human health and the environment and that attain or, as appropriate, waive ARARs, the Army evaluated the overall effectiveness of each alternative by assessing the relevant three criteria – long-term effectiveness and permanence; reduction in toxicity, mobility, and volume through treatment; and short-term effectiveness, in combination. The relationship of the overall effectiveness of this remedial alternative was determined to be proportional to its costs.

Both Alternatives 3 and 4 would be effective in remediating the site. Alternatives 3A and 3B would meet the remedial action objectives at a cost of $14.7 million and $16.3 million, respectively. Both Alternatives 4A and 4B will meet the remedial action

objectives for approximately half the cost of Alternatives 3A and 3B. In addition, Alternative 4B will meet the ground water cleanup levels approximately 20 years earlier and at a cost of $0.7 million less than 4A. Therefore, Alternative 4B, at a cost of $5.6 million, will provide the most cost-effective remedy.

2.10.4 Utilization of Permanent Solutions and Alternative Treatment Technologies or Resource Recovery Technologies to the Maximum Extent Practicable

Based on current information and analysis of the RI and FS reports, the Army and EPA believe that the selected alternative (Alternative 4B) for the Explosives Washout Lagoons site is consistent with the requirements of CERCLA and its amendments, specifically Section 121 of CERCLA, and the NCP.

The selected alternative provides overall protection of human health and the environment and achieves the risk-based cleanup levels by permanently removing the contamination from the aquifer and destroying it in a thermal treatment facility. The preferred alternative provides for the significant reduction of toxicity, mobility, and volume through containment and treatment. The preferred alternative also poses the fewest short-term risks, achieves cleanup in the shortest practical time, and is the most cost effective.

If feasible the selected alternative would regenerate the explosives-laden carbon for reuse at UMDA or send the explosives-laden carbon to a cement kiln, where the energetic content of the material would be recovered. By using either of these thermal treatment options the selected alternative would be utilizing a resource recovery technology. In addition, both of these thermal treatment processes are considered innovative.

In summary, the preferred alternative would achieve the best balance among the criteria used by EPA to evaluate the alternatives, including:

- Provide short- and long-term protection of human health and the environment
- Attain all risk-based cleanup levels
- Provide significant reduction of toxicity, mobility, and volume of the site contaminants through treatment
- Utilize permanent solutions and innovative treatment technologies to the maximum extent practicable

The support of the state and community in the evaluation process and the selection of Alternative 4B further justify the selection of Alternative 4B.

The selected remedy meets the statutory requirement to utilize permanent solutions and alternative treatment technologies to the maximum extent practicable.

2.10.5 Preference for Treatment as a Principal Element

The principal element of the selected remedy is the adsorption of the contaminants from the ground water using carbon adsorption followed by off-site thermal treatment of the spent carbon to destroy the explosive contaminants. The selected remedy, through the

use of carbon adsorption and off-site thermal treatment, satisfies EPA's preference for treatment that permanently and significantly reduces the toxicity, mobility, or volume of the hazardous substance.

2.11 Documentation of No Significant Changes

The Army and EPA presented a proposed plan (preferred alternative) for remediation of the Explosives Washout Lagoon Ground Water Operable Unit on March 2, 1994 during a public meeting. The proposed alternative presented in the proposed plan is the same as the selected alternative, Alternative 4B, presented in this ROD. No significant changes were made to the proposed alternative as a result of the public comment and public meeting.

3.0 Responsiveness Summary

The final component of the ROD is the Responsiveness Summary, which serves two purposes. First, it provides the agency decision makers with information about community preferences regarding the remedial alternatives and general concerns about the site. Second, it demonstrates to members of the public how their comments were taken into account as part of the decision-making process.

Historically, community interest in the UMDA installation has centered on the impacts of installation operations on the local economy. Interest in the environmental impacts of UMDA activities has typically been low. Only the proposed chemical demilitarization program, which is separate from CERCLA remediation programs, has drawn substantial comment and concern.

As part of the installation's community relations program, UMDA assembled in 1988 a TRC composed of elected and appointed officials and other interested citizens from the surrounding communities. Quarterly meetings provide an opportunity for UMDA to brief the TRC on installation environmental restoration projects and to solicit input from the TRC. Two TRC meetings were held during preparation of the feasibility study for the Explosives Washout Lagoons Ground Water Operable Unit. In those meetings, the TRC was briefed on the scope and results of the supplemental investigation and the methodology of and remedial alternatives considered in the feasibility study.

In December 1993, the TRC was expanded to meet the requirements of the RAB based on DoD guidance. Two RAB meetings were held during the selection of the proposed alternative.

The feasibility study and proposed plan for the Explosives Washout Lagoons Ground Water Operable Unit were made available to the public on February 15, 1994 at the following locations: UMDA Building 32, Hermiston, Oregon; the Hermiston Public Library, Hermiston, Oregon; and the EPA offices in Portland, Oregon. The notice of availability of the proposed plan was published in the *Hermiston Herald*, the *Tri-City Herald*, and the *East Oregonian* on February 15, 1994. The public comment period ended on March 17, 1994.

A public meeting was held at the Armand Larive Junior High School, Hermiston, Oregon, on March 2, 1994, to inform the public of the preferred alternative and to seek public comments. At this meeting, representatives from UMDA, USAEC, EPA, ODEQ, and Arthur D. Little represented the proposed remedy. Approximately six persons from the public and media attended the meeting. No questions were asked during the informal question and answer period specific to the Explosives Washout Lagoons Ground Water Operable Unit.

Two written comments were received during the comment period and expressed concern about the incineration of explosives and weapons on-site at UMDA. The comments were not addressed to a specific operable unit. Proposed plans for five operable units were presented during the comment period and these comments appear to relate specifically to the Explosive Washout Plant Operable Unit, since the proposed remedy would thermally oxidize the explosive contaminants in an afterburner. The comments are addressed in the Explosive Washout Plant ROD.

These comments could also be related to a misunderstanding about the treatment of the spent carbon from the treatment of the ground water. This carbon will contain explosives and will be shipped off site for thermal treatment. No incineration of the

carbon will be performed on site at UMDA. Off-site thermal treatment of the carbon would be performed at an EPA-approved incinerator, cement kiln, or carbon regeneration facility. The thermal destruction of the explosives would completely oxidize the explosives to carbon dioxide, water, and nitrous oxides. In all cases the thermal treatment of the spent carbon would be protective of human health and the environment.

The following documents outline the results of the site investigations and assessments of cleanup actions for the Explosives Washout Lagoons Ground Water:

Arthur D. Little, Inc. 1993. *Final Feasibility Study for Ground Water at Explosives Washout Lagoons Activity Area (OU3) at the Umatilla Depot Activity (UMDA).* Prepared for U.S. Army Environmental Center, Contract DAAA15-91-D-0016, Delivery Order No. 2. December.

Arthur D. Little, Inc. 1987. *Testing to Determine Relationship Between Explosive Contaminated Sludge Components and Reactivity.* Prepared for the U.S. Army Toxic and Hazardous Materials Agency. Contract No. DAAK11-85-D-0008, Report No. AMXTH-TE-CR-89096.

CH2M HILL/Morrison. 1992. Knudsen Environmental Services. *Feasibility Study for the Explosives Washout Lagoons (Site 4) Soils Operable Unit Umatilla Depot Activity (UMDA), Hermiston, Oregon.* Prepared for the U.S. Army Toxic and Hazardous Materials Agency. Report No. CETHA-BC-CR-92017.

Dames & Moore, Inc. 1994. *Draft Treatability Test Report for the Contaminated Groundwater at the Umatilla Army Depot Activity, Hermiston, Oregon,* Prepared for the U.S. Army Environmental Center. Contract No. DAAA15-88-D-0008.

Dames & Moore, Inc. 1992a. *Final Remedial Investigation Report for the Umatilla Depot Activity Hermiston, Oregon.* Volumes 1 through 6. Prepared for the U.S. Army Toxic and Hazardous Materials Agency. Contract No. DAAA15-88-D-0008, Delivery Order No. 3.

Dames & Moore, Inc. 1992b. *Final Human Health Baseline Risk Assessment Umatilla Depot Activity Hermiston, Oregon.* Prepared for U.S. Army Toxic and Hazardous Materials Agency. Contract No. DAAA15-88-D-0008, Delivery Order No. 3.