Environmental Restoration
University of California
Environmental Restoration Project, MS M992
Los Alamos, New Mexico 87545
505-667-0808/FAX 505-665-4747

RECEIVED AUG 1997

U. S. Department of Energy
Los Alamos Area Office, MS A316
Environmental Restoration Program
Los Alamos, New Mexico 87544
505-667-7203/FAX 505-665-4504

LIBRARY COPY

Date: August 15, 1997
Refer to: EM/ER:97-322

Mr. Benito Garcia
NMED-HRMB
P.O. Box 26110
Santa Fe, NM 87502

SUBJECT: RESPONSE TO THE NOD FOR THE RFI REPORT FOR PRSs IN TA-15 (FORMER OU 1086)

Dear Mr. Garcia:

Enclosed is a copy of the Los Alamos National Laboratory's response to the New Mexico Environment Department's Notice of Deficiency (NOD) concerning the Resource Conservation and Recovery Act Facility Investigation Report for Potential Release Sites 15-004(a-d, f), 15-007(b), 15-008(a, b), 15-009(e, j), 15-012(b), and C-15-004 in Technical Area 15. A certification form signed by the appropriate officials is also enclosed. The enclosed response repeats each comment from the NOD verbatim for convenience in reviewing.

Please contact Gene Gould at (505) 667-0402 or Mike Gilgosch at (505) 667-5794, if you have any questions regarding the response.

Sincerely,

Jorg Jansen, Program Manager
LANL/ER Project

Sincerely,

Theodore J. Taylor, Program Manager
DOE/LAAO

JJ/TT/rfr

Enclosures: (1) Response to the NOD for RFI Report for PRSs in TA-15 (Former OU 1086)
(2) Certification

The University of California is an Equal Opportunity Em

4208

Cy (w/ encs.):
J. Canepa, EM/ER, MS M992
M. Gilgosch, LAAO, MS A316
D. Griswold, AL-ERD, MS A906
G. Gould, EES-15, MS J495
J. Harry, EES-5, MS M992
N. Naraine, DOE-HQ, EM-453
D. Neleigh, EPA, R.6, 6PD-N
C. Rodriguez, CIO, MS M769
T. Taylor, LAAO, MS A316
J. White, ESH-19, MS K498
EM/ER (CT# C316), MS M992
RPF, MS M707
S. Dinwiddie, NMED-HRMB
M. Leavitt, NMED-GWQB
J. Parker, NMED-HRMB
G. Saums, NMED-SWQB
S. Yanicak, NMED-AIP, MS J993

Cy (w/o encs.):
T. Baca, EM, MS J591
T. Glatzmaier, DDEES/ER, MS M992
T. Longo, DOE-HQ, EM-453
D. McInroy, EM/ER, MS M992
G. Rael, AL-ERD, MS A906
J. Rochelle, LC-GEN, MS A187
J. Vozella, LAAO, MS A316
K. Zamora, LAAO, MS A316
EM/ER File, MS M992

CERTIFICATION

I certify under penalty of law that these documents and all attachments were prepared under my direction or supervision in accordance with a system designed to assure that qualified personnel properly gathered and evaluated the information submitted. Based on my inquiry of the person or persons who manage the system, or those persons directly responsible for gathering the information, the information submitted is, to the best of my knowledge and belief, true, accurate, and complete. I am aware that there are significant penalties for submitting false information, including the possibility of fine and imprisonment for knowing violation.

Document Title: Response to the NOD for RFI Report for PRSs in TA 15 (Former OU 1086)

Name: _____ Date: 8-15-97

Jorg Jansen, Program Manager
Environmental Restoration Project
Los Alamos National Laboratory

or

Tom Baca, Program Director
Environmental Management
Los Alamos National Laboratory

Name: _____ Date: 8/15/97

Joseph Vozella,
Acting Assistant Area Manager of
Environmental Projects
Environment, Safety, and Health Branch
DOE-Los Alamos Area Office

or

Theodore J. Taylor, Program Manager
Environmental Restoration Program
DOE-Los Alamos Area Office

RESPONSE TO NOD FOR
RFI REPORT FOR POTENTIAL RELEASE SITES
IN TECHNICAL AREA 15

ATTACHMENT A
WORKPLAN MODIFICATION

NMED Comment:

1. *LANL must explain why organic analyses were not conducted for PRSs 15-004(a,d), 15-004(b,c), 15-004(f), and 15-008(a). HRMB recognizes that the RFI Work Plan does not specify organic analyses for these PRSs, but this Work Plan is deficient in providing a basis for this.*

LANL Response:

Analyses for VOCs and SVOCs were not conducted at any of these sites because based on the RFI work plan (LANL 1993, 1087) and knowledge of site workers, these organics were never used in the explosives testing at these PRSs [15-004(a,d), 15-004(b,c), and 15-004(f)] and, therefore, are also not expected to be in the debris deposited at the surface disposal area [15-008(a)]. Tests carried out at these sites were not tests of the HE but rather used the HE to drive implosion or explosion and, therefore, complete burning of the HE is expected during the tests. The work plan indicates that HE field spot tests will be conducted to determine the presence or absence of HE and that samples that are positive will be sent to the offsite laboratory for confirmatory HE analysis. Although PRS 15-004(a,d) did not have any samples submitted for HE analysis and 15-004(b,c) had one sample submitted for HE analysis, twenty-four and nineteen sample locations, respectively, including those samples submitted for offsite analytical were field screened for HE and no positive results were obtained. PRSs 15-004(f) and 15-008(a) did have samples submitted for HE analysis by a fixed analytical laboratory as explained on page 4-27 of the RFI report. Despite holding time problems, the analytical results of the HE analysis of these samples and the HE spot test results indicated that HE was not present at these sites.

Reference:

LANL (Los Alamos National Laboratory), May 1993. "RFI Work Plan for Operable Unit 1086," Los Alamos National Laboratory Report LA-UR-92-3968, Los Alamos, New Mexico. (LANL 1993, 1087)

NMED Comment:

2. *HRMB recognizes that the RFI Work Plan does not specify sampling the 6 to 18 inch interval, or in most cases a maximum depth to be sampled, but the Work Plan is deficient in this respect. LANL must give a detailed explanation as to how this sampling scheme serves to define the vertical extent of contamination.*

LANL Response:

The work plan has defined a subsurface sample as a soil sample collected from 6 to 24 inches in depth (Appendix C). The chapters in the work plan describing the sites and their respective sampling indicate subsurface sampling is to 24 inches or deeper. Samples collected from the top 6 inches and from 18-24 inches effectively represent the sampling intervals used to indicate either the presence or absence of contamination at a sampling location. For the PRSs recommended for NFA in this RFI report [PRSs 15-004(a,d) and 15-004(c)], the surface and subsurface soils had no analytes detected above background.

With respect to the definition of vertical extent, the RFI report presents only the approach to and the results of Phase I sampling, which were designed to confirm or deny whether contamination is present. It is not intended to specifically address the vertical extent of contamination unless there is no contamination or the Phase I sampling results illustrate a decreasing trend in COPC concentrations with depth. Generally, if COPCs are found at concentrations of concern in either the surface or at depth, subsequent action in the form of additional sampling and/or remediation is recommended. The Phase II sampling and analysis plan, the voluntary corrective action plan, or, in some cases, the interim action plan for a PRS addresses the issue of extent so that the contamination can be defined and remediated.

NMED Comment:

3. *The conceptual model developed in the RFI Work Plan (LANL 1993, 1087) indicated that erosion by surface runoff and aerial resuspension were the principal migration pathways at these PRSs. Unfortunately, the conceptual model is deficient in discussing possible migration to groundwater. Reference Section 4.2.3; "In general, transport of contaminants through the unsaturated zone to groundwater* ***probably*** *[emphasis added] is not a pathway of immediate concern at TA-15." Reference further Table 4.2-1; "Ephemeral aquifers* ***may*** *[emphasis added] exist in Water and Potrillo canyons but are unlikely to receive* ***large*** *[emphasis added] quantities of contaminants from TA-15." This language is vague, and inconsistent with Section 3.6.1 discussing the Potrillo Canyon discharge sink; "Because of the large volume of streamflow (up to a million gallons per event) that infiltrates into this rather small area (less than 150,000 m^2), this area potentially could be an area for potential recharge of the main aquifer along the Pajarito Plateau." With no groundwater monitoring included in this report, there is no way of determining if groundwater has been effected. LANL shall include a discussion of plans for groundwater monitoring for TA-15.*

LANL Response:

Groundwater monitoring is beyond the scope of this RFI report. A Hydrogeologic Workplan for Los Alamos National Laboratory has been submitted to NMED. This workplan is intended to characterize the hydrogeologic setting beneath LANL and enhance LANL's long-term groundwater monitoring program. The workplan includes the installation of additional wells to obtain hydrogeologic information on the regional aquifer, the intermediate perched zone, and the alluvial or shallow perched zone.

In the hydrogeologic workplan, TA-15 is part of Aggregate 6, which includes groundwater monitoring of Potrillo Canyon and Water Canyon. The hydrogeologic workplan proposes to install two alluvial wells in Potrillo Canyon. One of these wells will be located upgradient from the discharge sink and will serve to track contaminants moving out of the aggregate in the alluvial groundwater. One regional aquifer well is also proposed for installation in Potrillo Canyon and will be located about 1 mile downgradient of the discharge sink. The purpose of this well will be to investigate the presence of intermediate perched zones and to characterize the water quality of these zones downgradient of the Potrillo Canyon firing sites. Information from this well will also be used to provide water quality data for the regional aquifer at this location. Two alluvial wells are proposed for installation in Water Canyon to evaluate the presence of alluvial groundwater and the possible migration of contaminants from Cañon de Valle into Water Canyon alluvium. Three regional wells are proposed for installation in Water Canyon for identifying intermediate perched zones, establishing water quality of perched zones and the regional aquifer, and for providing hydrogeologic control in the central and eastern portions of the Laboratory. For more detailed information on LANL's groundwater monitoring program please refer to the Hydrogeologic Workplan.

ATTACHMENT B
List of Deficiencies

RFI Report for Potential Release Sites (PRSs) 14-004(a-d,f), 15-007(b), 15-008(a,b), 15-009(e,j), 15-012(b), C-15-004 located in former Operable Unit 1086, Field Unit 2, Technical Area 15, Los Alamos National Laboratory

NMED Comment:

GENERAL COMMENTS

1. *LANL shall provide a description of analyses, instrumentation and QA/QC procedures used in the mobile field labs and with field instrumentation.*

LANL Response:

The mobile chem van was used to screen soil samples for mercury, uranium, and lead using x-ray fluorescence (XRF) and beryllium using Laser Induced Breakdown Spectroscopy (LIBS). These analyses were used to bias sample locations for submitting samples to a fixed laboratories. The results of the analyses are presented in Appendix D of the RFI report. The mobile rad van was used to screen soil samples for radioactivity (gross alpha, beta, and gamma) prior to XRF analysis. In addition, radiological surveys were conducted by the field team using sodium iodide detectors and pancake probes. The sodium iodide detector was used to take surface measurements of radioactivity prior to sample collection, while the pancake probe was used to measure radioactivity for each sample collected. The results of the radiological surveys were not used to characterize the sites, but rather for health and safety purposes as well as for biasing samples for submittal to a fixed laboratories. The results of the analyses are presented in Appendix D of the RFI report.

Information regarding the mobile labs and field instrumentation used in this RFI are provided in Attachment 1 to these responses.

NMED Comment:

2. *The use of tolerance intervals is an alternate approach to the analysis of variance in determining the presence of statistically significant contamination. A tolerance interval is constructed from data obtained from (uncontaminated) background soil locations. The concentrations from the site investigations are then compared with the tolerance interval. If the site constituent concentrations fall outside the tolerance interval, statistically significant contamination is evinced. Tolerance intervals may be used for determining statistically significant contaminant concentrations; however, the following criteria must be met and documented:*
   - *The presence of homogeneous soil types must be verified. The use of Upper Tolerance Limits (UTLs) is appropriate for sites that overlie extensive homogeneous geologic deposits (e.g., thick homogeneous lacustrine clays) that do not naturally display geochemical variations.*
   - *The tolerance interval must be calculated using an adequate data set (minimum of 8 data points).*
   - *Calculated UTLs must be compared to human health and ecological screening values to determine their relevance.*
   - *For adequate review, the Administrative Authority (AA) must be provided the entire data set (including non-detectable concentrations) used to perform the statistical analysis and the type of statistical analysis performed.*

- *For adequate review, the AA must be provided all background data points.*
- *Variability within each data set must be defined (i.e., minimum and maximum constituent concentrations, average constituent concentration value and the standard deviation).*
- *A normality test must be applied to the data set prior to the derivation of an UTL.*
- *The data set must be inspected for outliers (i.e., unusually high or low values) and their identity and source (such as analytical laboratory transcription errors) should be documented.*

If these criteria are met, LANL must recalculate UTLs based on the 95 percent confidence level of the 95th percentile of distribution [USEPA, 1989, Statistical Analysis of Ground-Water Monitoring Data at RCRA Facilities - Interim Final Guidance, NTIS PB89-151047]. If these criteria cannot be met, LANL must calculate the background concentration based on the 95 percent upper confidence level of the arithmetic average concentration.

LANL Response:

The Laboratory has documented both the background data and the approach taken to determine if PRS data exceed background in two documents. These documents have been provided to both EPA Region 6 and NMED regulators for their review and comment. One document is titled, "Natural Background Geochemistry and Statistical Analysis of Selected Soil Profiles, Sediments, and Bandelier Tuff, Los Alamos, New Mexico" (LA-UR-95-3486) (Longmire et al. 1995, 1266), which contains a description of the soil, sediment, and tuff background sample locations, analytical methods, and data analysis. The other document is titled, "Application of LANL: Background Data to ER Project Decision-making, Part 1: Inorganics" (LA-UR-96-1534 (Ryti et al. 1996, 1298), which describes how the appropriate background data are selected and the relevant statistical tests and graphical data interpretation are used.

We have summarized the list of issues below and have provided references to specific pages in the two documents listed above that address each comment.

1) The presence of homogeneous soil types must be verified. The use of Upper Tolerance Limits (UTLs) is appropriate for sites that overlie extensive homogeneous geologic deposits (e.g., thick homogeneous lacustrine clays) that do not naturally display geochemical variations.

Pages 31-40 of the soils chapter in LA-UR-95-3486 evaluates differences spatially and by soil horizon for several key inorganic chemicals. Major differences were observed between soil horizons, but not locations (or soil types), thus UTLs were calculated by individual soil horizon and for all soil horizons. The background UTLs used in this RFI report were those for all soil horizons because individual soil horizons (A,B, and C) were not identified during the Phase I sampling. See page 4 in LA-UR-1534 to see how subsets of the LANL background data are selected.

2) The tolerance interval must be calculated using an adequate data set (minimum of 8 data points).

Pages 25 -28 in LA-UR-95-3486 presents summary statistics, including the count of samples by soil horizon.

3) Calculated UTLs must be compared to human health and ecological screening values to determine their relevance.

Pages 23-24, 42 of the soils chapter in LA-UR-95-3486 discuss the relationship between background concentrations and screening action levels for several inorganics. This comparison is also made on pages 10-11 of LA-UR-96-1534.

4) For adequate review, the Administrative Authority (AA) must be provided the entire data set (including non-detectable concentrations) used to perform the statistical analysis and the type of statistical analysis performed.

A copy of the background data set is provided in Attachment 2. The statistical analyses performed on the background data set included exploratory data analysis (EDA), which included box plots, density estimates, histograms, quantile-quantile plots, and scatter plots, correlation analyses, log and square root transformations, where appropriate, outlier analysis, and statistical comparisons of soil horizons using chi-square analysis.

5) For adequate review, the AA must be provided all background data points.

A copy of the background data set is provided in Attachment 2. The background sample locations are presented in LA-UR-95-3486.

6) Variability within each data set must be defined (i.e., minimum and maximum constituent concentrations, average constituent concentration value and the standard deviation).

The statistical analysis of the LANL background soils samples is discussed on pages 23-76 of the soils chapter in LA-UR-95-3486. Averages, minima, and maxima by soil horizon are presented on pages 25-28 of the soils chapter in LA-UR-95-3486, summary statistics, including standard deviations, average concentrations, etc., of the final background data set are presented on pages 53-58 of the soils chapter in LA-UR-95-3486.

7) A normality test must be applied to the data set prior to the derivation of an UTL.

The data was tested for normality prior to the derivation of the UTLs. Statistical distributions of the inorganics are presented in Table 20, page 52 of the soils chapter in LA-UR-95-3486, and the associated text is on pages 49-50.

8) The data set must be inspected for outliers (i.e., unusually high or low values) and their identity and source (such as analytical laboratory transcription errors) should be documented.

The process for evaluating outliers is presented on pages 41-42 of the soils chapter in LA-UR-95-3486, and the results of this analysis are presented on pages 42-49.

LANL believes that the criteria listed by NMED in General Comment No. 2 have been met, and hence, that the current background UTLs based on 95 percent confidence interval of the 95th percentile of the background concentration distributions are appropriate for use by the ER Project.

A review of this RFI report found one instance in which the previous version of background thresholds were not replaced by the current values in a data comparison table. The UTLs for antimony and arsenic in Table 4-20, page 4-77 are incorrect. These values should read 1 mg/kg and 7.82 mg/kg, respectively. Re-analysis of the data from the PRS [15-008(b)] confirms that the appropriate sample data are presented in the table and that there were no changes in the data comparison due to the above error. LANL apologizes for any confusion that this oversight may have caused.

References:

Longmire, P. A., D.E. Broxton, and S.L. Reneau, October 1995. "Natural Background Geochemistry and Statistical Analysis of Selected Soil Profiles, Sediments, and Bandelier Tuff," Los Alamos National Laboratory Report LA-UR-3486, Los Alamos, New Mexico.

Ryti, R., P. Longmire, and E. McDonald, March 1996. "Application of LANL Background Data to ER Project Decision-Making, Part 1; Inorganics," Los Alamos National Laboratory Report LA-UR-96-1534, Los Alamos, New Mexico.

NMED Comment:

3. *LANL shall provide a description of instrumentation, calibration procedures, employee training and QA/QC procedures used with the HE Spot Test Kit.*

LANL Response:

The information presented was obtained from "Field Spot Test Kit for Explosives", by J. F. Baytos as well as conversations with Terry Spontarelli and Jose Archuletta of DX Division.

The LANL high explosives (HE) field spot-test is a qualitative test developed by LANL M1 Division (currently DX Division) to identify the presence of explosives contaminants on equipment and materials in processing buildings and explosives areas. The test has also been approved by DX Division for use in detecting contaminated soil, shrapnel, and spent hydraulic fluids.

The basis of the test is a series of chemical reactions of test kit reagents with organic nitro explosives and other nitro compounds. The chemical reactions result in color changes that indicate the presence of these compounds. The test is essentially a qualitative test which provides identification of explosive compounds when those compounds are present in concentrations in the hundreds to thousands of mg/kg.

Test Kit Components
Reagent 1: 0.1 molar sodium methoxide solution in dimethyl sulfoxide. Sensitive to TNT, TATB, and other nitroaromatics.
Reagent 2: 10 mg/ml sulfanilamide in 0.2 molar hydrochloric acid solution. Added after reagent 1 to detect RDX, HMX and PETN.
Reagent 3: 0.3 mg/ml N-1-naphthylethylenediamine dihydrochloride in water. Added after reagent 2, develops color when RDX, HMX, or PETN are present.
Apparatus: Filter paper, plastic reagent dropper bottles, spatula, polyethylene bags, paper towels, test kit instructions

Abbreviated Test Kit Procedure
1. A filter paper is swiped over a surface to collect explosives dust, or a milligram quantity of sample is placed onto a filter paper.
2. One drop each of Reagents 1 through 3 are added in sequence to the collected sample. After addition of Reagents 1 and 3 the resulting color is observed.
3. The presence of explosives is determined by comparing the observed colors to a table relating observed colors to explosives.
4. No calibrations are performed as the reagents are prepared to the correct concentrations either by weight or by volume, and reagents are dispensed dropwise by the user of the kit.

Test Kit Performance
Extensive testing of the test kit provided findings as summarized below for explosives commonly used at LANL.

Explosives Tested: TNT, Comp B, RDX, PETN, HMX, TATB, NQ and Tetryl
Other Test Samples: Samples including inert materials and nitro compounds as well as explosives

Findings:

1. False positives were found to be much more likely than false negatives. Any colored, DMSO soluble material in soil could be mistaken for explosive.
2. A 100 ppm TNT, HMX RDX concentration in soil has been identified correctly in the laboratory. The kits are not as sensitive to TATB.
3. Soil samples containing 100 ppm to 10,000 ppm of TNT and HMX yield progressively darker colors commensurate with the concentration of explosive in the sample, although the emphasis of the kits is not on quantitating the explosives.

Employee Training

1. Each test kit user is trained by LANL DX Division to properly identify the test kit color changes. During training, use of the kits is first demonstrated then blind samples are analyzed by the trainees. The blind samples include both blanks and pure HE standards. Training is designed to be as realistic for the trainees as practicable. For example, if the trainees intend to test soils, they analyze blank and spiked soil samples. The compounds spiked into the soils include TATB, TNT, Tetryl, HMX, RDX, PETN, nitroguanidine and nitrocellulose.

2. If the test kit procedure changes, trainees receive additional training to familiarize them with the new operating procedure.

3. Trainees are taught that the kits do not provide quantitative results and that they are intended to be used as a screening tool to identify HE in samples for shipping purposes.

4. Trainees are warned during training not to store the kits at high temperatures. They are also taught to error toward false positives (i.e., identifying HE as present in a sample when it is not).

5. Training rosters and training are documented; the documents are retained by DX Division.

Quality Control

1. Each reagent is tested by LANL DX Division after preparation to ensure that it exhibits the correct color reaction. The kits are tested against those explosive compounds normally encountered at LANL which include: TATB, TNT, Tetryl, HMX, RDX, PETN, NQ, NC. If the kits fail to produce the expected response for the indicated explosive compounds the reagents are discarded and new batches of reagents are prepared. Batches (250 ml) of each reagent are tested, and each kit is tested prior to release from DX Division for use by other authorized LANL personnel. Reagent "3" is packaged in a dark bottle because it is somewhat sensitive to light. In general the kits are not very sensitive to light or heat although Reagent "1" has been known to freeze at temperatures near 67°F because of the DMSO solvent in that reagent. However, thawing the reagent restores it to a usable condition.

2. Test kit reagents are generally consumed before shelf-lives (at least six months in duration) are expired, so shelf-lives are not monitored closely.

3. Check Standards are not typically analyzed as part of the field screening. Trainees are taught to analyze blanks to provide an indication of background color associated with the filter paper, etc. at the time of analysis.

4. Experience of DX Division personnel shows that test results error toward false positives.

Reference:

Baytos, J. F. "Field Spot Test Kit for Explosives", Los Alamos National Laboratory, Los Alamos, NM, LA-12071-MS.

NMED Comment:

4. *The conceptual model developed in the RFI Work Plan (LANL 1993, 1087) indicated that erosion by surface runoff and aerial resuspension were the principal migration pathways at many of these PRSs. Also, Table 4.2.2; SUMMARY OF GENERAL DATA NEEDS FOR THE TA-15 OU RFI in the RFI Work Plan identifies the following objectives; "Identify any migration of contaminants at each PRS.", and "Determine contaminant fate and transport." In light of this it is difficult to understand why surface runoff migration pathways and fate and transport of contaminants were not investigated in this report. This report can not be considered complete until these required investigations have been addressed by LANL.*

LANL Response:

This RFI report was written to address the potential for human health risk at these PRSs through the risk-based screening assessment process. The ecological screening assessment process presented in this report is no longer appropriate and a new methodology will be implemented that will evaluate all areas of the Laboratory. LANL recognizes the need to address other aspects of a PRS's impact on the environment including surface water runoff migration, groundwater, and fate and transport of materials offsite. The ER Project is developing the approaches for investigating these problems and will evaluate and report on all PRSs accordingly once the approaches and procedures are in place.

NMED Comment:

5. *The report indicates soil samples were collected using a hand auger. Were samples collected from the disturbed auger cuttings or was a core barrel or split spoon advanced beyond the bottom of the auger hole to collect an undisturbed sample?*

LANL Response:

Soil samples are collected using the hand auger technique (LANL-ER-SOP 6.10). Except for VOC samples, the soil is removed from the auger, placed in a bowl, and homogenized before placing in the appropriate sample containers. For VOC samples, the sample is not removed from the auger but rather collected from the bottom of the auger and placed in the sample container.

NMED Comment:

6. *This RFI Report presents qualified data to the extent that HRMB must question the QA/QC procedures used, and the validity of both the results obtained and the resulting data analyses. The only quantified example from the report text is as follows; "Holding times for approximately 90% of the high explosives (HE) samples in PRS 15-004(b,c) and PRS 15 -004(f) were missed." This is unacceptable. LANL shall identify the source of these results (fixed lab, mobile lab, etc.), explain the cause of the QA/QC problems, and detail measures to ensure that these problems do not reoccur.*

LANL Response:

The sources of the holding time problems included the mobile labs, the DX Division, and the sample management group (CST Group). At the time of this Phase I investigation, it was necessary to submit all field samples to the rad van and chem van for screening of radioactivity and metals by XRF, respectively. Unfortunately, because of the volume of samples this process generally took a week or more to complete. Following the screening by the mobile labs, the samples were submitted to the sample management office for shipment to the fixed analytical laboratories. At the time of this investigation, DX Division was responsible for HE analysis of all samples. However, because of the large number of samples submitted during this period, DX Division was unable to keep up with the requests for analysis, which resulted in missed holding times for HE samples. In addition, the sample management group was unable to keep up with the number of samples submitted to it and as a result, coolers containing the samples were often days or weeks late in being shipped.

In the three years since these samples were collected and the holding time problems were encountered, measures have been taken to alleviate these concerns. Field screening is no longer done by the mobile labs but is performed by the field teams when the samples are collected. The rad and XRF instruments are now calibrated and used by trained personnel in the field, which reduces the time involved in performing the analyses and obtaining the results necessary to make decisions. The HE analysis of samples is now conducted by contract offsite fixed laboratories and not conducted by DX Division. The sample management office has also been reorganized and has become more efficient in preparing samples for shipment, shipping the samples to the analytical laboratories, and receiving the results back from the laboratories. For example, samples received by the sample management office by 2 P.M. are shipped overnight to the analytical laboratories thereby ensuring that samples are received by the laboratories in most cases within 24 hours of collection. As a result, the excessive holding time problems encountered in the early years of the RFI field investigations have been eliminated.

NMED Comment:

6a. *LANL shall include in the Report a tabular summary per constituent of the qualified data, including but not limited to the percent of the qualified results, number of qualified results, total number of samples, and the source of the data, such as fixed lab, mobile lab, etc. Also, the sections of the report which discusses data analysis shall include summary discussions of the above topics.*

LANL Response:

All of the analytical data submitted for verification and validation and used in the screening assessment are from fixed laboratory analyses. The first paragraph of the screening assessment section for each PRS (Section 4.X.3) in the RFI report provides a brief summary of the QA/QC data assessment conducted on the data for that PRS. The following table is provided as requested. Analytes not listed were not qualified and PRSs not listed did not have qualified data for the specific analyte.

SUMMARY OF QUALIFIED DATA FOR TA-15 RFI REPORT

Analyte	PRS	Qualifier	Total Number Samples	Number of Results Qualified	Percent of Results Qualified	Percent of Data Acceptable
Aluminum	15-004(a,d)	J	15	9	60	100
	15-004(b,c)	J	9	7	77.8	100
Antimony	15-004(f)	R	50	23	46	54
	15-008(a)	R & J	8	4	50	62.5
Arsenic	15-004(b,c)	UJ & J	9	7	77.8	100
	15-004(a,d)	UJ & J	15	9	60	100
Barium	15-004(a,d)	J	15	1	6.7	100
	15-004(f)	J	50	23	46	100
	15-008(a)	J	8	3	37.5	100
Beryllium	15-004(b,c)	J	9	5	55.6	100
	15-004(a,d)	J	15	6	40	100
	15-004(f)	R	50	1	2	98
	15-009(e)	UJ	2	2	100	100
	15-009(j)	J	1	1	100	100
Cadmium	15-004(a,d)	R	15	1	6.7	93.7
	15-004(f)	J & R	50	23	46	66
	15-008(a)	J & R	8	4	50	75
Chromium	15-004(b,c)	J	9	7	77.8	100
	15-004(a,d)	J	15	15	100	100
	15-004(f)	J	50	25	50	100
	15-008(a)	J	8	3	37.5	100
	15-008(b)	J	14	1	7.1	100
Cobalt	15-004(f)	J	50	1	2	100
Copper	15-004(a,d)	J	15	1	6.7	100
	15-004(f)	J	50	23	46	100
	15-008(a)	J	8	3	37.5	100
Lead	15-004(b,c)	J	9	7	77.8	100
	15-004(a,d)	J	15	9	60	100
	15-004(f)	J	50	1	2	100
	15-009(e)	J	2	2	100	100

SUMMARY OF QUALIFIED DATA FOR TA-15 RFI REPORT
Continued

Analyte	PRS	Qualifier	Total Number Samples	Number of Results Qualified	Percent of Results Qualified	Percent of Data Acceptable
Magnesium	15-004(b,c)	J	9	7	77.8	100
	15-004(a,d)	J	15	11	73.3	100
Manganese	15-004(f)	J	50	23	46	100
	15-008(a)	J	8	3	37.5	100
Mercury	15-004(b,c)	UJ	9	2	22.2	100
	15-004(a,d)	UJ, J, & R	15	7	46.7	73.3
	15-004(f)	UJ, J, & R	57	43	75.4	87.7
	15-008(a)	UJ, J, & R	8	6	75	75
	15-009(e)	J	2	2	100	0
	15-007(b)	UJ & J	13	6	46.2	100
	15-008(b)	UJ, J, & R	14	13	92.9	64.3
Nickel	15-004(b,c)	UJ	9	7	77.8	100
Selenium	15-004(b,c)	R	9	7	77.8	22.2
	15-004(a,d)	UJ & R	15	10	66.7	40
	15-004(f)	UJ	50	23	46	100
	15-008(a)	UJ	8	3	37.5	100
Silver	15-004(f)	J	50	1	2	100
Thallium	15-004(b,c)	UJ	9	7	77.8	100
	15-004(a,d)	UJ	15	9	60	100
Uranium	15-004(b,c)	J	9	9	100	100
	15-004(a,d)	J	15	10	66.7	100
	15-004(f)	J	50	11	22	100
	15-007(b)	J	13	6	46.2	100
Vanadium	15-004(b,c)	J	9	7	77.8	100
	15-004(a,d)	J	15	11	73.3	100
	15-004(f)	J	50	14	28	100
	15-007(b)	J	13	7	53.8	100
	15-008(b)	J	14	1	7.1	100
Zinc	15-004(a,d)	J	15	1	6.7	100
	15-004(f)	J	50	23	46	100
	15-008(a)	J	8	3	37.5	100

SUMMARY OF QUALIFIED DATA FOR TA-15 RFI REPORT
Continued

Analyte	PRS	Qualifier	Total Number Samples	Number of Results Qualified	Percent of Results Qualified	Percent of Data Acceptable
2-Amino-4,6-dinitrotoluene	15-004(b,c)	R	1	1	100	0
	15-008(a)	UJ	8	1	12.5	100
	15-009(j)	UJ	1	1	100	100
4-Amino-2,6-dinitrotoluene	15-004(b,c)	R	1	1	100	0
	15-008(a)	UJ	8	1	12.5	100
	15-009(j)	UJ	1	1	100	100
2,4-Dinitrotoluene	15-004(b,c)	R	1	1	100	0
	15-008(a)	UJ	8	1	12.5	100
2,6-Dinitrotoluene	15-004(b,c)	R	1	1	100	0
	15-008(a)	UJ	8	1	12.5	100
m-Dinitrobenzene	15-004(b,c)	R	1	1	100	0
	15-008(a)	UJ	8	1	12.5	100
	15-009(j)	UJ	1	1	100	100
HMX	15-004(b,c)	R	1	1	100	0
	15-008(a)	UJ	8	1	12.5	100
Nitrobenzene	15-004(b,c)	R	1	1	100	0
	15-008(a)	UJ	8	3	37.5	100
	15-009(j)	UJ	1	1	100	100
m,o,p-Nitrotoluene	15-004(b,c)	R	1	1	100	0
	15-004(f)	UJ	11	7	63.6	100
	15-008(a)	UJ	8	3	37.5	100
	15-009(j)	UJ	1	1	100	100
RDX	15-004(b,c)	R	1	1	100	0
	15-008(a)	UJ	8	1	12.5	100
TETRYL	15-004(f)	R	11	7	63.6	36.4
	15-008(a)	UJ & R	8	3	37.5	75

SUMMARY OF QUALIFIED DATA FOR TA-15 RFI REPORT
Continued

Analyte	PRS	Qualifier	Total Number Samples	Number of Results Qualified	Percent of Results Qualified	Percent of Data Acceptable
sym-Trinitrobenzene	15-004(b,c)	R	1	1	100	0
	15-008(a)	UJ	8	1	12.5	100
2,4,6-Trinitrotoluene	15-004(b,c)	R	1	1	100	0
	15-008(a)	UJ	8	1	12.5	100
Benzo(a)pyrene	15-009(e)	UJ	2	1	50	100
Benzo(b)fluoranthene	15-009(e)	UJ	2	1	50	100
Benzo(g,h,i)perylene	15-009(e)	UJ	2	1	50	100
Benzo(k)fluoranthene	15-009(e)	UJ	2	1	50	100
Di-n-octyl phthalate	15-009(e)	UJ	2	1	50	100
Dibenzo(a,h)anthracene	15-009(e)	UJ	2	1	50	100
1,2-Dichlorobenzene	15-009(e)	UJ	2	2	100	100
	15-007(b)	UJ	6	1	16.7	100
1,3-Dichlorobenzene	15-009(e)	UJ	2	2	100	100
	15-007(b)	UJ	6	1	16.7	100
1,4-Dichlorobenzene	15-009(e)	UJ	2	2	100	100
	15-007(b)	UJ	6	1	16.7	100
Indeno(1,2,3-cd)pyrene	15-009(e)	UJ	2	1	50	100
Naphthalene	15-009(e)	UJ	2	2	100	100
1,2,4-Trichlorobenzene	15-009(e)	UJ	2	2	100	100
Acetone	15-007(b)	UJ	6	1	16.7	100
Benzene	15-007(b)	UJ	6	1	16.7	100
Bromobenzene	15-007(b)	UJ	6	1	16.7	100
Bromochloromethane	15-007(b)	UJ	6	1	16.7	100
Bromodichloromethane	15-007(b)	UJ	6	1	16.7	100
Bromoform	15-007(b)	UJ	6	1	16.7	100
Bromomethane	15-007(b)	UJ	6	1	16.7	100
2-Butanone	15-007(b)	UJ	6	1	16.7	100
n-Butylbenzene	15-007(b)	UJ	6	1	16.7	100
sec-Butylbenzene	15-007(b)	UJ	6	1	16.7	100
tert-Butylbenzene	15-007(b)	UJ	6	1	16.7	100

SUMMARY OF QUALIFIED DATA FOR TA-15 RFI REPORT
Continued

Analyte	PRS	Qualifier	Total Number Samples	Number of Results Qualified	Percent of Results Qualified	Percent of Data Acceptable
Carbon disulfide	15-007(b)	UJ	6	1	16.7	100
Carbon tetrachloride	15-007(b)	UJ	6	1	16.7	100
Chlorobenzene	15-007(b)	UJ	6	1	16.7	100
Chlorodibromomethane	15-007(b)	UJ	6	1	16.7	100
Chloroethane	15-007(b)	UJ	6	1	16.7	100
Chloroform	15-007(b)	UJ	6	1	16.7	100
Chloromethane	15-007(b)	UJ	6	1	16.7	100
o-Chlorotoluene	15-007(b)	UJ	6	1	16.7	100
p-Chlorotoluene	15-007(b)	UJ	6	1	16.7	100
1,2-Dibromo-3-chloropropane	15-007(b)	UJ	6	1	16.7	100
1,2-Dibromoethane	15-007(b)	UJ	6	1	16.7	100
Dibromomethane	15-007(b)	UJ	6	1	16.7	100
Dichlorofluoromethane	15-007(b)	UJ	6	1	16.7	100
1,1-Dichloroethane	15-007(b)	UJ	6	1	16.7	100
1,2-Dichloroethane	15-007(b)	UJ	6	1	16.7	100
1,1-Dichloroethene	15-007(b)	UJ	6	1	16.7	100
trans-1,2-Dichloroethene	15-007(b)	UJ	6	1	16.7	100
cis-1,2-Dichloroethylene	15-007(b)	UJ	6	1	16.7	100
1,2-Dichloropropane	15-007(b)	UJ	6	1	16.7	100
1,3-Dichloropropane	15-007(b)	UJ	6	1	16.7	100
2,2-Dichloropropane	15-007(b)	UJ	6	1	16.7	100
1,1-Dichloropropene	15-007(b)	UJ	6	1	16.7	100
cis-1,3-Dichloropropene	15-007(b)	UJ	6	1	16.7	100
trans-1,3-Dichloropropene	15-007(b)	UJ	6	1	16.7	100
Ethylbenzene	15-007(b)	UJ	6	1	16.7	100
2-Hexanone	15-007(b)	UJ	6	1	16.7	100
Isopropylbenzene	15-007(b)	UJ	6	1	16.7	100
4-Isopropyltoluene	15-007(b)	UJ	6	1	16.7	100

SUMMARY OF QUALIFIED DATA FOR TA-15 RFI REPORT
Continued

Analyte	PRS	Qualifier	Total Number Samples	Number of Results Qualified	Percent of Results Qualified	Percent of Data Acceptable
Methyl iodide	15-007(b)	UJ	6	1	16.7	100
4-Methyl-2-pentanone	15-007(b)	UJ	6	1	16.7	100
Methylene chloride	15-007(b)	UJ	6	1	16.7	100
Propylbenzene	15-007(b)	UJ	6	1	16.7	100
Styrene	15-007(b)	UJ	6	1	16.7	100
1,1,1,2-Tetrachloroethane	15-007(b)	UJ	6	1	16.7	100
1,1,2,2-Tetrachloroethane	15-007(b)	UJ	6	1	16.7	100
Tetrachloroethylene	15-007(b)	UJ	6	1	16.7	100
Toluene	15-007(b)	UJ	6	1	16.7	100
1,1,2-Trichloro-1,2,2-trifluoroethane	15-007(b)	UJ	6	1	16.7	100
1,1,1-Trichloroethane	15-007(b)	UJ	6	1	16.7	100
1,1,2- Trichloroethane	15-007(b)	UJ	6	1	16.7	100
Trichloroethene	15-007(b)	UJ	6	1	16.7	100
Trichlorofluoromethane	15-007(b)	UJ	6	1	16.7	100
1,2,3-Trichloropropane	15-007(b)	UJ	6	1	16.7	100
1,2,4-Trimethylbenzene	15-007(b)	UJ	6	1	16.7	100
1,3,5-Trimethylbenzene	15-007(b)	UJ	6	1	16.7	100
Vinyl chloride	15-007(b)	UJ	6	1	16.7	100
mixed Xylenes	15-007(b)	UJ	6	1	16.7	100
Benzoic acid	15-007(b)	R	13	3	23.1	76.9
o-Chlorophenol	15-007(b)	R	13	3	23.1	76.9
4-Chlorophenylphenyl ether	15-007(b)	R	13	3	23.1	76.9
2,4-Dichlorophenol	15-007(b)	R	13	3	23.1	76.9
2,4-Dimethylphenol	15-007(b)	R	13	3	23.1	76.9
2,4-Dinitrophenol	15-007(b)	R	13	3	23.1	76.9
2-Methylphenol	15-007(b)	R	13	3	23.1	76.9
4-Methylphenol	15-007(b)	R	13	3	23.1	76.9
2-Nitrophenol	15-007(b)	R	13	3	23.1	76.9
4-Nitrophenol	15-007(b)	R	13	3	23.1	76.9

SUMMARY OF QUALIFIED DATA FOR TA-15 RFI REPORT
Continued

Analyte	PRS	Qualifier	Total Number Samples	Number of Results Qualified	Percent of Results Qualified	Percent of Data Acceptable
Pentachlorophenol	15-007(b)	R	13	3	23.1	76.9
Phenol	15-007(b)	R	13	3	23.1	76.9
2,4,5-Trichlorophenol	15-007(b)	R	13	3	23.1	76.9
2,4,6-Trichlorophenol	15-007(b)	R	13	3	23.1	76.9
Actinium-228	15-004(f)	J	8	1	12.5	100
Americium-241	15-004(f)	J	8	1	12.5	100
Uranium-235	15-004(f)	J	8	1	12.5	100

NMED Comment:

7. *LANL must resample all samples with analytical results that are "R" qualified, as well as all samples with low bias which may be present in concentrations greater than background.*

LANL Response:

For those PRSs that have been recommended for a VCA, LANL will conduct additional sampling as part of the VCA activities. All of the analytes in question will be included in the respective VCA Plans as COPCs and have preliminary remediation goals (PRGs) provided. All confirmatory samples submitted to a fixed laboratory will be analyzed for these analytes and compared to their respective cleanup levels. For the two sites proposed for NFA in the RFI report [PRS 15-004(c) and PRSs 15-004(a,d)], see responses to Specific Comments 16, 17, 18, and 19.

NMED Comment:

8. *In the data evaluation sections of the report, LANL describes the contamination levels as being "of concern" to human health or not. It is inappropriate for LANL to dictate what levels of contamination are "of concern" to the citizens of New Mexico. LANL shall revise this language accordingly.*

LANL Response:

It was not LANL's intent to dictate anything regarding the citizens of New Mexico. A review of the RFI report indicated that this statement was made for only one PRS [PRS 15-004(a,d)] in the data interpretation section (Section 4.2.3.2, page 4-21). The next to last sentence of the paragraph is modified as follows:

The data show elevated levels of copper, lead, mercury, and uranium, but none at levels ~~of concern for human health.~~ *greater than SALs. In addition, the normalized sum for the MCE (0.17) indicates that there are no additive effects.* Therefore, *there* are no human health COPCs for this site.

NMED Comment:

9. *LANL must clarify which land use scenarios were used to generate SALs for each of the Multiple Chemical Evaluations (MCEs) performed in this report. LANL shall base its SALs on U.S. Environmental Protection Agency (USEPA) Region IX residential Preliminary Remediation Goals (PRGs). In addition, to performing the MCE based on residential risk, LANL may present an evaluation of risk based on a most likely exposure scenario. In response to this NOD comment LANL shall submit a table of revised SALs, SALs applied in the RFI report, and discuss any resulting differences which may effect the decisions made in the RFI report.*

LANL Response:

As stated in Section 3.2.2, page 3-15 of the RFI report, the SALs used in the screening assessment are EPA's Region 9 PRGs. However, the text fails to indicate the land use scenario on which the SALs are based. The SALs used in the screening assessment for the PRSs discussed in this RFI report are based on the EPA Region 9 residential PRGs from 1995 (EPA 1995, 1307). Hence, the MCEs are also based on residential land use. Because the SALs used in the RFI report are based on the 1995 EPA Region 9 residential PRGs, as required, there are no differences to present.

Reference:

EPA (US Environmental Protection Agency), September 1, 1995. "Region IX Preliminary Remediation Goals (PRGs) Second Half 1995," ER ID No. 53970, San Francisco, California. (EPA 1995, 1307)

NMED Comment:

10. *LANL shall not use field instrumentation or historical data to determine the areal extent of contamination. When field instrumentation is used for screening LANL shall provide assurances (such as detection limits and calibration records) that appropriate Quality Assurance/ Quality Control criteria were adhered to. LANL must also obtain confirmatory samples from fixed lab when using field screening.*

LANL Response:

It is entirely appropriate to utilize field screening and historical data to assist in a preliminary determination of the extent of contamination and to identify potential contaminants suspected of being present at a site as long as confirmatory samples are submitted to an offsite fixed analytical laboratory as was done for the PRSs in this RFI report. The field screening of the PRSs discussed in this RFI report was used as an economical and reliable approach to determine whether contamination existed over relatively large areas and to bias the samples submitted to the offsite laboratories. The field instrumentation was properly calibrated and operated by experienced and trained personnel. The field instruments were calibrated and recalibrated according to the SOPs and manuals provided in Attachment 1. The approach of initially collecting a large number of samples using field screening techniques and then, based on the results of the field screening, submit samples to be analyzed more rigorously (i.e., by a fixed laboratory) from those locations that showed the highest concentrations is the approach recommended by EPA in its "Guidance for Conducting Remedial Investigations and Feasibility Studies Under CERCLA" (EPA 1988, 0087). In no case were decisions pertaining to either an NFA or further action for a site in this RFI report based solely on the field screening results. All decisions as presented in the RFI report are based on the results of the fixed analytical data. In addition, the final determination of areal extent is only done following analyses of confirmatory samples by a fixed laboratory as part of either a Phase II investigation or in conjunction with a voluntary corrective action at a site.

Reference:

EPA (US Environmental Protection Agency), October 1988. "Guidance for Conducting Remedial Investigations and Feasibility Studies Under CERCLA," Interim Final, EPA/540/G-89/004, OSWER Directive 9355.3-01, Washington, DC. (EPA 1988, 0087)

NMED Comment:

11. *All tables which give sampling data must specify the source of that data (e.g., fixed lab, field lab, field instrumentation), and the level of QA/QC associated with each result.*

LANL Response:

All of the sampling data presented in the data comparison tables in the RFI report are from fixed analytical laboratories. As indicated in Section 3.0 of the RFI report, routine QA/QC samples were analyzed along with all of the samples collected in the field and submitted to a fixed laboratory. These QA/QC samples included laboratory blanks, field and laboratory duplicates, blind QC

samples, surrogates, matrix spikes, internal standards, and laboratory control samples. The results of the QA/QC sample analyses were used to assess and validate (if necessary) the associated analytical results. The baseline validation process is based on EPA's functional guidelines for inorganic and organic data review (EPA 1994, 1205; EPA 1994, 1206).

References:

EPA (US Environmental Protection Agency), February 1994. "USEPA Contract Laboratory Program National Functional Guidelines for Organic Data Review," EPA540/R-94/012, Washington, DC. (EPA 1994, 1205)

EPA (US Environmental Protection Agency), February 1994. "USEPA Contract Laboratory Program National Functional Guidelines for Inorganic Data Review," EPA540/R-94/013, Washington, DC. (EPA 1994, 1206)

NMED Comment:

12. *In the data evaluation sections of the report, LANL describes the contamination levels as being "of concern" to human health or not. It is inappropriate for LANL to dictate what levels of contamination are "of concern" to the citizens of New Mexico. LANL shall revise this language accordingly.*

LANL Response:

See response to General Comment 8.

NMED Comment:

SPECIFIC COMMENTS

Please note that text from the report is italicized, responses are in normal font.

CHAPTER 1: INTRODUCTION

1.2: RFI Overview

1.2.3: PRSs 15-004(f), 15-009(a), 15-009(e), and AOC-15-004: E-F Aggregate Page 1-8

"The conceptual model developed in the RFI Work Plan (LANL 1993, 1087) indicated that erosion by surface runoff and aerial resuspension were the principal migration pathway at these PRSs."

1. See Attachment A, Comment 3.

LANL Response:

See response to Attachment A, Comment 3.

NMED Comment:

2. See General Comment 4.

LANL Response:

See response to General Comment 4.

NMED Comment:

1.2.3: PRSs 15-004(f), 15-009(a), 15-009(e), and AOC-15-004: E-F Aggregate Page 1-8

"For the septic tank, the principal migration pathway would be release from the tank and migration through the soil vadose zone."

3. The soil under the septic tank and associated piping and outfall must be investigated.

LANL Response:

The intent of the voluntary corrective action (VCA) proposed for this PRS [15-009(e)] is to perform additional sampling as well as to empty the septic tank of its contents, pressure wash the interior of the tank, sample the concrete of the tank, and fill it with concrete. The soil below the septic tank, at the inlet and outlet as well as in the outfall area will be sampled as part of the VCA conducted during the summer of this year.

NMED Comment:

1.3: Field Activities, Page 1-16

"Use of a remote-controlled drill rig was required by Laboratory policy because of the potential presence of HE in the soil. This rig was not powerful enough to drill completely through the mounds to the soil/tuff interface. The deepest it was able to penetrate was 16.5 ft, approximately 4 ft above the soil/tuff interface."

4. Were any samples taken at the 16.5 ft depth that the remote drill rig was able to reach? This is not made clear in the report.

LANL Response:

One sample, sample ID AAC0326, from sample location 15-2290 on the west mound was collected from a depth of 16 ft to 16.5 ft. This sample was analyzed for TAL metals and uranium as well as by gamma spectroscopy. The deepest sample collected from the east mound (sample ID AAC0342) from sample location 15-2245 was obtained from 14-14.5 ft. The reason for not collecting a sample at similar depths as the west mound was because of refusal of the drill rig below 14.5 ft. It should be noted that a VCA is proposed for E-F Site that will involve the removal of the mounds down to the soil/tuff interface. Additional samples of the soil will be collected and analyzed for TAL metals, uranium, and HE as part of this remediation.

NMED Comment:

5. Since no positive HE sampling data was reported for this PRS, can the sampling specified in the Work Plan now be attempted by a drill rig capable of reaching the soil/tuff interface?

LANL Response:

The DX (Dynamic Experimentation) Division, which is the operating group at TA-15, will not permit any drilling on the mounds unless it is conducted remotely. Although no HE was detected at this PRS, the DX Division does not want to take any chances that all HE was expended in this area. In addition, LANL does not believe additional sampling of the mounds is necessary at this time, because the VCA to be conducted in FY 98 will remove the mounds. At that time, the soil in the area will be characterized for waste purposes and to determine if cleanup levels were achieved.

NMED Comment:

"The NOD to the RFI Work Plan (LANL 1993, 1087) called for three samples to be collected from each debris pile at PRS 15-008(a), with one sample at depth. The sampling team collected three samples at each debris pile, all to the soil/tuff interface."

6. Please clarify why all samples were collected to soil/tuff interface.

LANL Response:

The field team found that it was not possible to collect a sample at depth because the amount of soil at the site was minimal. Only the top 0-12 inches or less were available for sampling before encountering the soil/tuff interface. As a result, only surface samples could be collected at this site down to the soil/tuff interface.

NMED Comment:

"All fourteen surface samples were collected; however, refusal of the hand auger occurred at eight locations, so only six subsurface samples could be collected."

7. See General Comment 5.

LANL Response:

See response to General Comment 5.

NMED Comment:

"The fourth deviation was in reference to the NOD issued by the EPA for the RFI Work Plan (LANL 1993, 1087) for AOC C-15-004:..."

8. Please clarify what the deviation is here.

LANL Response:

The NOD issued by EPA for the RFI Work Plan for AOC C-15-004 is as follows:

"AOC C-15-004; Transformer Station, p. 7-21 - LANL shall include a detailed map showing the sample locations. LANL shall also include: the soil sampling method; the depth of the samples taken; and, what the samples will be field screened for?"

In response, the work plan indicated that two surface soil samples at 0 to 6 inches would be collected and that the samples would be field screened for radioactivity, uranium, beryllium, lead, and mercury. The deviations from this work plan response were that the surface soil samples were collected from 0 to 4 inches rather than 0 to 6 inches and that the samples were field screened only for radioactivity and not for the metals. These deviations from the work plan occured because only 4 inches of soil was present at the site before reaching the tuff and because metals were not suspected of being present due to the transformer station.

NMED Comment:

"The area just below the support structure that held the transformers is on a very steep slope towards the bottom of a drainage, so any contamination that may have been present in the past is unlikely to have remained there."

9. LANL shall explain why the surface migration pathway of the COPC has not been investigated to determine if PCBs have been released.

LANL Response:

Because there was no visual evidence that there had been any release of material from the transformers, no additional samples were collected to look at possible surface migration. However, LANL agrees that sampling of the drainage area should have been conducted and proposes to collect the appropriate samples in FY98.

NMED Comment:

1.3.1 through 1.3.6: Pages 1-18 and 1-19

10. No information is given on calibration, QA/QC or employee training. See General Comment 1.

LANL Response:

See response to General Comment 1 and Attachment 1 for the mobile chem and rad vans. See response to General Comment 3 for the HE spot test. The personal air monitoring, organic vapor screening, and dust monitoring were used exclusively for industrial hygiene protection of the field team members. The instrumentation and the results of sampling were not used in any way to characterize the sites being sampled or to bias sample locations. As indicated in the RFI report, there were no readings obtained that were above ambient levels during the Phase I investigation. The Site Safety Officer (SSO) is responsible for the calibration and operation of these instruments. Training with these instruments is primarily through on the job training by becoming familiar with the instruction manuals. In addition, all individuals are required to take the 40 hour HAZWOPER training, which provides information on individual instruments and their use, as well as the annual 8 hour HAZWOPER refresher. LANL has provided the operating instructions for each of these instruments for NMED's information in Attachment 3.

NMED Comment:

CHAPTER 2: ENVIRONMENTAL SETTING

2.2.1: General Geology, Page 2-1

"In the absence of additional structures, such as faults and fractures, the horizontal uniformity in rock type implies relative uniformity in surface hydrologic and geologic properties throughout the area."

11. The report does not demonstrate that there are no faults and/or fractures in the area. Further, this statement is contradictory to the Work Plan Section 3.4.2; "The fault planes (Rendija Canyon and Guaje Mountain) or, perhaps, more feathered fracture patterns may be reasonably thought to lie beneath TA-15." Hydrologic and geologic properties must be demonstrated, not implied. LANL shall explain this inconsistency, and present any updated geological information.

LANL Response:

This topic is beyond the scope of the RFI report. Although both statements quoted were taken from the RFI work plan for OU 1086 (LANL 1993, 1087), the statement in the RFI report is inconsistent with Section 3.4.2 of the RFI Work Plan as well as with geologic investigations conducted in the three plus years since the work plan was written.

A detailed study of fractures exposed in cliff faces on Pajarito Mesa in TA-67 and TA-15, spanning the east-west extent of TA-15, identified no zones of significantly higher fracture densities that could act as preferential hydrologic pathways (Vaniman and Chipera, 1995). This is consistent with examination of fractures exposed in 1300 meters of trenches on Pajarito Mesa (Kolbe et al., 1994; Reneau and Raymond 1995, 1372). These studies did identify evidence for faulting in several areas, particularly in TA-67 near the projected location of the Rendija Canyon fault. However, this dispersed, relatively small-scale faulting was not associated with recognizable increases in either fracture density or fracture aperture. In addition, the Hydrogeologic Workplan will investigate the groundwater in this area. See response to General Comment 3.

References:

Kolbe, T, J., Sawyer, A. Gorton, S. Olgi, D. Simpson, C. Fenton, S. Reneau, J. Carney, J. Bott, and I. Wong, 1994. "Evaluation of the Potential for Surface Faulting at the Proposed Mixed Waste Disposal Facility, TA-67," unpublished report, Woodward-Clyde Federal Services, Oakland, California, 3 volumes.

LANL (Los Alamos National Laboratory), July 1993. "RFI Work Plan for Operable Unit 1086," Los Alamos National Laboratory Report LA-UR-92-3968, Los Alamos, New Mexico. (LANL 1993, 1087)

Reneau, S., T. Kolbe, D. Simpson, JS Carney, JN Gardner, SS Olig, DT Vaniman, December 1995. "Surficial Materials and Structure at Pajarito Mesa", in SL Reneau and R. Raymond, Jr., eds., "Geological Site Characterization for the Proposed Mixed Waste Disposal Facility", Los Alamos National Laboratory Report LA-13089-MS, ER ID No. 54709, Los Alamos, New Mexico, p. 31-69. (Reneau and Raymond 1995, 1372)

Vaniman, D., and S. Chipera, 1995. "Mesa-penetrating Fractures, Fracture Mineralogy, and Projected Fault Traces at Pajarito Mesa," in S.L. Reneau and R. Raymond, Jr., eds., "Geological Site Characterization for the Proposed Mixed Waste Disposal Facility", Los Alamos National Laboratory Report LA-13089-MS, ER ID No. 54709, Los Alamos, New Mexico, p. 71-85. (Reneau and Raymond 1995, 1372)

NMED Comment:

<u>2.2.3: Sedimentation and Erosion, Page 2-3</u>

"Sediment accumulation in excess of three feet from a single event have been measured in the active channel in Potrillo Canyon east of OU 1086."

12. The possible impacts to Potrillo Canyon from these SWMUs have not been investigated. LANL must sample channel sediments and stormwater events to determine fate and transport of contaminants from TA-15. See General Comment 4.

LANL Response:

The canyons investigation team of the ER Project will address the possible impacts of sediment accumulation and stormwater events on the canyons. See response to General Comment 4.

NMED Comment:

2.3.1: Surface Water, Pages 2-3 and 2-4

"Four separate watersheds, each with an established stream-channel drainage network, are present within OU 1086... All surface water transport of contaminants at OU 1086 ultimately will flow into one of these four canyons."

13. Given this inevitability, the fate and transport of contaminants from OU 1086 to the canyons must be investigated. The investigation of these SWMUs cannot be considered complete until the possible impacts to the canyons is determined. See General Comment 4.

LANL Response:

The canyons investigation team of the ER Project will address the fate and transport of materials and the possible impacts to the canyons. See response to General Comment 4.

NMED Comment:

14. The hydraulic sink in Potrillo Canyon has not been addressed. Until the role of the hydraulic sink as a possible contaminant pathway to a perched intermediate zone, should it exist, or to the regional aquifer has been determined, the investigation of OU 1086 cannot be considered complete. See Attachment A, Comment 3.

LANL Response:

This topic is beyond the scope of the RFI report. LANL recognizes that the hydraulic sink needs to be further investigated. The hydraulic or discharge sink found in Potrillo canyon was extensively studied by Becker (Becker 1991, 0699) and the results presented in a paper entitled, "Influence of Hydraulic and Geomorphologic Components of a Semi-Arid Watershed on Depleted Uranium Transport." In addition, the Hydrogeologic Workplan proposes to install one alluvial well upgradient of the discharge sink and one regional well about I mile downgradient of the discharge sink (see response to Attachment A, Comment 3). The canyons investigation team of the ER Project will also be conducting an investigation of Potrillo Canyon.

Reference:

Becker, N. M., 1991. "Influence of Hydraulic and Geomorphologic Components of a Semi-Arid Watershed on Depleted Uranium Transport," a thesis submitted in partial fulfillment of the requirements for the degree of Doctor of Philosophy (Civil and Environmental Engineering) at the University of Wisconsin, Madison, Wisconsin. (Becker 1991, 0699)

NMED Comment:

2.3.2: Groundwater, Page 2-4

"Saturated groundwater occurs in three modes on the Pajarito Plateau: shallow, alluvial groundwater bodies in canyon bottoms; isolated perched horizons in conglomerates and basalts at depths between 120 and 200 ft; and the main aquifer underlying the entire plateau."

15. This generalization is not adequate to characterize the geohydrology of OU 1086. Without monitor wells, the hydrogeology of the area and the possible effects to shallow ground water, or pathways to the regional aquifer (identified as the "main aquifer" in this section of the report) cannot be known.

LANL Response:

A Hydrogeologic Workplan that will address this issue has been written and provided to NMED. See response to Attachment A, Comment 3.

NMED Comment:

CHAPTER 3: APPROACH TO DATA ASSESSMENT AND ANALYSIS

Table 3-1: PRS 15-004(a,d), Page 3-2

"Arsenic recoveries low by a factor of 5.6 relative to the nominal value for the QC sample. Low bias of arsenic indicates that arsenic may be at concentrations greater than background, and data are considered suspect."

16. LANL must resample this PRS for arsenic.

LANL Response:

The request for inorganic analysis of a soil sample results in the analysis and reporting of all target analyte list (TAL) metals regardless of whether those metals are suspected of being present at levels of concern. This was true for the inorganic analyses conducted at the firing sites because only beryllium, lead, and mercury were considered to be potential contaminants at these sites based on information from the site workers in the RFI work plan (LANL 1993, 1087). Site information obtained from the workers at the firing sites at TA-15 indicate that arsenic was not used in the explosives testing and would therefore not have caused an increase in arsenic concentrations above background (see memorandum from Roger Rasmussen, a retired DX Division scientist familiar with TA-15 activities, in Attachment 4). Although nine of the fifteen arsenic results from PRS 15-004(a,d) had a QA/QC problem with the blind QC sample, all other QC criteria associated with these samples (i.e., initial and continuing calibrations, matrix spike recovery, and laboratory control sample recovery) were acceptable. In addition, the qualified

sample results for arsenic are comparable to the unqualified data from PRS 15-004(a,d) as well as the arsenic data from PRS 15-004(f) (E-F Site), which is adjacent to PRS 15-004(a,d). For example, the qualified arsenic data from PRS 15-004(a,d) ranged from <2 mg/kg to 4.5 mg/kg, while the unqualified arsenic data from the other six samples collected at this PRS ranged from 2.7 mg/kg to 3.7 mg/kg. Similarly, the arsenic data collected from PRS 15-004(f) (all of which were unqualified) ranged from <1.4 mg/kg to 5.2 mg/kg, which were similar to the values observed at PRS 15-004(a,d). Therefore, the potentially low biased data are representative of the entire area in that they are similar to other data collected, are below the background UTL of 7.82 mg/kg. In conjunction with the rest of the analytical results for PRS 15-004(a,d), the arsenic data support the recommendation for NFA based on human health.

Reference:

LANL (Los Alamos National Laboratory), July 1993. "RFI Work Plan for Operable Unit 1086," Los Alamos National Laboratory Report LA-UR-92-3968, Los Alamos, New Mexico. (LANL 1993, 1087)

NMED Comment:

"Data qualified as R. Recommended holding time exceeded."

17. LANL must resample this PRS for mercury.

LANL Response:

Twenty-seven sample locations and 39 samples were field screened with XRF for mercury. None of these samples detected mercury above the 5 mg/kg detection limit. Fifteen samples from ten sample locations were submitted to the fixed laboratory for inorganic analysis. Although four of the fifteen samples had a holding time problem that resulted in the data being qualified as R, the remaining mercury data are of good quality, reasonable confidence and suitable for decision-making purposes. These data indicate that mercury was present in one sample at a concentration of 0.27 mg/kg, which is slightly above background and two orders of magnitude below its SAL. In addition, the mercury data from PRS 15-004(f) (E-F Firing Site), which conducted much larger, more frequent, and more recent explosives testing, were similar to that collected at PRS 15-004(a,d). For example, the valid mercury data from PRS 15-004(a,d) ranged from <0.1 to 0.27 mg/kg compared to PRS 15-004(f) mercury data that ranged from <0.05 to 0.28 mg/kg. Therefore, Firing Site C [PRS 15-004(a,d)] is believed to be adequately characterized for mercury and does not need additional sampling. In conjunction with the rest of the analytical results for PRS 15-004(a,d), the mercury data support the recommendation for NFA based on human health.

NMED Comment:

Table 3-3: PRS 15-004(b,c), Page 3-3

"Arsenic recoveries low by a factor of 5.6 relative to the nominal value for the QC sample. Low bias of arsenic indicates that arsenic may be at concentrations greater than background, and data are considered suspect."

18. LANL must resample this PRS for arsenic.

LANL Response:

See response to Specific Comment 16. Site information obtained from the workers at the firing sites at TA-15 indicate that arsenic was not used in the explosives testing and would therefore not have caused an increase in arsenic concentrations above background (see Attachment 4). Although seven of the nine arsenic results from PRS 15-004(b,c) had a QA/QC problem with the blind QC sample, all other QC criteria associated with these samples (i.e., initial and continuing calibrations, matrix spike recovery, and laboratory control sample recovery) were acceptable. In addition, the qualified sample results for arsenic are comparable to the unqualified data from PRS 15-004(b,c) as well as the arsenic data from other firing sites at TA-15 [PRSs 15-004(a,d) and 15-004(f)]. For example, the qualified arsenic data from PRS 15-004(b,c) ranged from<2.5 mg/kg to 4.6 mg/kg, while the unqualified arsenic data from the other two samples collected at this PRS ranged from 2.9 mg/kg to 4.4 mg/kg. Similarly, the arsenic data collected from PRS 15-004(f) (all of which were unqualified) ranged from <1.4 mg/kg to 5.2 mg/kg, while the arsenic data from PRS 15-004(a,d) (presented in Specific Comment 16) ranged from <2 mg/kg to 4.5 mg/kg. All of which were similar to the values observed at PRS 15-004(b,c). Therefore, the potentially low biased data are representative of the entire area in that they are similar to other data collected, are below the background UTL of 7.82 mg/kg. In conjunction with the rest of the analytical results, the arsenic data support the recommendation for NFA for Firing Site B [15-004(c)] based on human health.

Firing Site A [PRS 15-004(b)] has been remediated as recommended in the RFI report. The VCA for this PRS was conducted in the summer of 1996 and the VCA Completion Report submitted to the Department of Energy in September 1996. The results of the soil analyses from this VCA have shown that there are no elevated levels of arsenic or other inorganics present in the soil. Arsenic concentrations ranged from <1.2 mg/kg to 3.2 mg/kg, which are comparable to the arsenic data presented above.

NMED Comment:

"Data qualified as R. Recommended holding time exceeded."

19. LANL must resample this PRS for high explosives.

LANL Response:

Nineteen random samples were collected and screened with the HE spot test and none were found to be positive for HE. However, because only one high explosive sample was collected and submitted to a fixed laboratory and this sample grossly exceeded holding time, LANL will resample PRS 15-004(b,c) for HE and submit to a fixed laboratory. No other resampling of this firing site is proposed.

NMED Comment:

Table 3-3: PRS 15-004(f), Page 3-4

"Data qualified as R for antimony."

20. LANL must resample for antimony.

LANL Response:

This site has been recommended for a VCA based on the results of the RFI Phase I. Because additional action is warranted for this site, LANL proposes to add antimony to the list of COPCs identified during the Phase I investigation. The VCA Plan to be written for this site will include cleanup levels and confirmatory sampling for this inorganic in order to verify that elevated concentrations are not present at this site.

NMED Comment:

*"Low bias of cadmium indicates that cadmium may be at concentrations greater than SAL for two samples, and data for these samples (indicated by *) are considered suspect."*

21. LANL must resample this PRS for cadmium.

LANL Response:

LANL will include cadmium as a COPC during the VCA at this PRS. See response to Specific Comment 20.

NMED Comment:

"Data not qualified. Recommended holding time exceeded. Samples received at laboratory at temperature greater than recommended. Data are considered suspect and not usable."

22. LANL must explain why this data is not qualified as R. LANL must resample this PRS for mercury.

LANL Response:

The explanation for not qualifying the mercury data for missed holding time is stated as follows in the data package:

"The 28-day recommended analytical holding time for Hg in soil was exceeded for samples in this request by 20 to 22 days.... Since the recommended analytical holding time for Hg in soil was not grossly exceeded for the samples in this request, no Hg results were qualified based on missed holding times.

Technical requirements for sample holding times have only been established for water matrices. The holding times for soils (and other non-aqueous matrices such as sediments, oily wastes, and sludge) are currently under investigation. When results are available they will be incorporated into the data evaluation process...."

Gross exceedance of holding time is defined as more than twice the holding time by EPA's functional guidelines for inorganic and organic data review (EPA 1994, 1205; EPA 1994, 1206). The only sample in this request number that fit this definition was sample AAC0346, which exceeded holding time by 38 days, and the mercury datum for this sample was qualified as R. Because the holding times for the other samples were less than twice the holding time the validator decided not to qualify the data. However, functional guidelines recommends qualifying results as UJ or J (again based on water samples) if holding times are not grossly exceeded. Based on this criterion, these data probably should be qualified as UJ because they are all nondetects. In addition, a review of the data package indicates no reference to the laboratory

receiving the samples at a temperature other than 4°C. Therefore, qualification based on this issue is not warranted.

One hundred and twenty-three samples were collected and field screened with XRF for mercury. None of these samples detected mercury above the 5 mg/kg detection limit. Seven of 57 samples collected from E-F Site and submitted to the fixed laboratory for mercury analysis had data qualified as R due to missed holding times. The remaining 50 mercury results were either undetected or detected at concentrations (0.11 mg/kg to 1.8 mg/kg) of more than an order of magnitude below the SAL. Therefore, this site has been adequately characterized for mercury and has not found it to be a COPC.

References:

EPA (US Environmental Protection Agency), February 1994. "USEPA Contract Laboratory Program National Functional Guidelines for Organic Data Review," EPA540/R-94/012, Washington, DC. (EPA 1994, 1205)

EPA (US Environmental Protection Agency), February 1994. "USEPA Contract Laboratory Program National Functional Guidelines for Inorganic Data Review," EPA540/R-94/013, Washington, DC. (EPA 1994, 1206)

NMED Comment:

Table 3-3: PRS 15-004(f), Page 3-5

"Data qualified as R. Tetryl recovery below acceptable recovery for QC sample."

23. LANL must detail how low tetryl recovery effects sample results, and resample the appropriate constituents.

LANL Response:

The percent recovery of tetryl in the blind QC sample was below the acceptable level of 10%. As a result, it may not be possible to accurately quantify this analyte and the data are qualified as R. Because this site has been recommended for a VCA based on other COPCs being present, LANL will not resample until the cleanup at this site has been achieved. The VCA Plan for E-F Site will include testing the soil with the HE spot test as well as testing all confirmatory samples for HE by a fixed analytical laboratory.

NMED Comment:

Table 3-3: PRS 15-004(f), Page 3-6

"Data are qualified as R. Recommended holding time exceeded."

24. LANL must resample this PRS for mercury.

LANL Response:

See response to Specific Comment 22.

NMED Comment:

Table 3-4: PRS 15-007(b), Page 3-7

"Data qualified as R. Surrogate recoveries less than acceptable limits."

25. LANL must detail how low surrogate recovery effects sample results, and resample the appropriate constituents.

LANL Response:

The low surrogate recoveries make it difficult to accurately quantify the analytes associated with the surrogates because of possible matrix problems. Because this PRS has been recommended for a VCA based on other COPCs being present (including other SVOCs), LANL will not resample until the cleanup at this site has been achieved. The VCA Plan for PRS 15-007(b) will include testing the removed soil for SVOCs as well as testing all confirmatory samples for SVOCs by a fixed analytical laboratory.

NMED Comment:

Table 3-5: PRS 15-008(a), Page 3-8

"Data are qualified as R. Recommended holding time exceeded."

26. LANL must resample this PRS for mercury.

LANL Response:

Because this PRS has been recommended for a VCA based on other COPCs being present, LANL will not resample until the cleanup at this site has been achieved. The VCA Plan for PRS 15-008(a) will include testing the soil removed as well as all confirmatory samples for TAL metals including mercury by a fixed analytical laboratory.

NMED Comment:

"Data qualified as R for antimony."

27. LANL must resample for antimony.

LANL Response:

See response to Specific Comment 20.

NMED Comment:

"Low bias of cadmium indicates that cadmium may be at concentrations greater than SAL for two samples, and data for these samples are considered suspect."

28. LANL must resample this PRS for cadmium.

LANL Response:

See response to Specific Comment 21.

NMED Comment:

"Data qualified as R. Tetryl recovery below acceptable recovery for QC sample."

29. See Specific Comment 23.

LANL Response:

The percent recovery of tetryl in the blind QC sample was below the acceptable level of 10%. As a result, it may not be possible to accurately quantify this analyte and the data are qualified as R. Because this site has been recommended for a VCA based on other COPCs being present, LANL will not resample until the cleanup at this site has been achieved. The VCA Plan for PRS 15-008(a) will include testing the soil with the HE spot test as well as testing all confirmatory samples for HE by a fixed analytical laboratory.

NMED Comment:

Table 3-6: PRS 15-008(b), Page 3-9

"Data are qualified as R. Recommended holding time exceeded."

30. LANL must resample this PRS for mercury.

LANL Response:

See response to Specific Comment 26.

NMED Comment:

Table 3-7: PRS 15-009(e), Page 3-10

"Data are qualified as R. Recommended holding time exceeded."

31. LANL must resample this PRS for mercury.

LANL Response:

Although the data are qualified as unusable, mercury was detected in the septic tank liquid. The septic tank liquid is scheduled to be pumped out, the interior of the tank pressure washed, and the concrete sampled as part of the VCA for this PRS. The waste characterization will include TCLP analysis of the liquid. Resampling for mercury is therefore not necessary because the contents of the tank will be removed during the VCA.

NMED Comment:

"Data qualified as UJ or J. Recommended holding time exceeded by a few days. Data considered valid."

32. LANL must;

(a) specify by how many days the recommended holding time was missed; and
(b) provide the guidance detailing by how many days a holding time must be missed before data is qualified as R; or
(c) LANL must resample this PRS for beryllium and lead.

LANL Response:

The 180-day holding time for metals in water was exceeded by 21 days. As a result, the data are qualified as UJ or J.

EPA's functional guidelines for inorganic and organic data review (EPA 1994, 1205; EPA 1994, 1206) indicate that gross exceedance of holding time (i.e., more than twice the holding time) may be cause for data rejection. The inorganic guidelines (EPA 1994, 1206) also states,

> **"If holding times are exceeded, the reviewer must use professional judgment to determine the reliability of the data and the effects of additional storage on the sample results. The expected bias would be low and the reviewer may determine that results <IDL are unusable (R)."**

Because metals are extremely stable and the samples were preserved at pH 2, the holding time did not significantly effect the reliability of the metals data. In addition, the liquid in the septic tank has been scheduled to be removed as part of the VCA at this PRS.

References:

EPA (US Environmental Protection Agency), February 1994. "USEPA Contract Laboratory Program National Functional Guidelines for Organic Data Review," EPA540/R-94/012, Washington, DC. (EPA 1994, 1205)

EPA (US Environmental Protection Agency), February 1994. "USEPA Contract Laboratory Program National Functional Guidelines for Inorganic Data Review," EPA540/R-94/013, Washington, DC. (EPA 1994, 1206)

NMED Comment:

<u>3.1.1: Inorganic Analyses, Pages 3-12 and 3-13</u>

[for PRS 15-004(a,d], and [for PRS 15-004(b,c)]

"These data indicate that arsenic may be at concentrations greater than background, and the data are considered suspect. However, arsenic is not considered to be a present as a result of activities at this site."

33. Please clarify how the conclusion that arsenic is not present was reached.

LANL Response:

The statement quoted above was meant to indicate that arsenic was not a COPC at this site because this inorganic was not used in any of the explosives testing conducted at this PRS. The basis for this statement was the RFI work plan (LANL 1993, 1087), which indicated that uranium, beryllium, lead, and mercury were the potential contaminants at these sites. The primary source of the work plan information was from interviews with the workers at these PRSs. Site information obtained from the workers at the firing sites at TA-15 indicated that arsenic was not used in the explosives testing and would therefore not have caused an increase in arsenic concentrations above background (see Attachment 4). The data obtained from the firing sites also indicates that there was no input of arsenic as a result of site activities. See responses to Specific Comments 16 and 18 for data comparisons.

Reference:

LANL (Los Alamos National Laboratory), May 1993. "RFI Work Plan for Operable Unit 1086," Los Alamos National Laboratory Report LA-UR-92-3968, Los Alamos, New Mexico. (LANL 1993, 1087)

NMED Comment:

[for PRS 15-004(f)]

"...data usability was affected for some antimony samples as a result of low percent recovery in the blind QC sample. These data were unusable. Data usability was affected for two cadmium samples as a result of low percent recovery in the matrix spike. These data indicated that cadmium may be a concentrations greater than its SAL, and the data are considered suspect. Mercury data for twelve samples were also considered unusable because holding time was exceeded."

LANL Response:

Comment 34 was missing.

NMED Comment:

35. LANL must resample this PRS for antimony, cadmium, and mercury.

LANL Response:

See responses to Specific Comments 20, 21, and 22.

NMED Comment:

[for PRS 15-008(a)]

"...data usability was affected for two cadmium samples as a result of low percent recovery in the matrix spike. These data indicated that cadmium may be at concentrations greater than its SAL, and the data are considered suspect. Data usability was affected for two antimony samples as a result of low percent recovery in the blind QC ample. These data were unusable. Mercury data for two samples were also considered unusable because the holding time was exceeded."

36. LANL must resample this PRS for antimony, cadmium, and mercury.

LANL Response:

See responses to Specific Comments 20, 21, and 26.

NMED Comment:

[for PRS 15-008(b)]

"...mercury data for five samples were unusable because the holding time was exceeded."

37. LANL must resample this PRS for mercury.

LANL Response:

See response to Specific Comment 26.

NMED Comment:

[for PRS 15-009(e)]

"Two mercury samples were unusable as a result of exceeding holding times."

38. LANL must resample this PRS for mercury.

LANL Response:

See response to Specific Comment 31.

NMED Comment:

3.1.2: Organic Analyses, Page 3-13

"Some of the volatile and semivolatile organic data from PRS 15-007(b) were affected by QA/QC issues (Table 3-4). For the acid semivolatiles in three samples, data were unusable as a result of low surrogate recoveries."

39. See Specific Comment 25.

LANL Response:

See response to Specific Comment 25.

NMED Comment:

3.1.4: High Explosives Analyses, Page 3-14

"Holding times for approximately 90% of the high explosives (HE) samples in PRS 15-004(b,c) and PRS 15-004(f) were missed."

40. HRMB respectfully suggests that the submittal of reports such as this with gross QA/QC problems is in the interest of neither DOE/LANL nor the State of New Mexico. Limited resources would be better served by the submission of reports with quality data.

LANL Response:

LANL concurs with this observation. See response to General Comment 6 regarding changes to the process to eliminate this problem.

NMED Comment:

3.2: Screening Assessment Methodology

3.2.2: Screening Action Levels Comparison/other Standards Page 3-15

"The Laboratory has adopted the U.S. EPA's Region IX Preliminary Remediation Goals (PRGs) as soil SALs for comparative purposes"

41. See General Comment 9.

LANL Response:

See response to General Comment 9.

NMED Comment:

3.2.3: Ecological Screening Assessment Methodology

3.2.3.1: Ranking of Landscape Condition and Receptor Accessibility to COPCs, Page 3-21

"If the potential for access by receptors is highly unlikely, then the accessibility is scored as zero."

42. LANL must provide additional rationale for a score of zero for potential accessibility by biological receptors. Unless a PRS is totally enclosed, a "potential" accessibility would exist for receptors.

LANL Response:

The ecological screening assessment methodology presented as part of this RFI report is no longer appropriate. A new methodology has been developed with input from EPA Region 6 and NMED. As a result, all of the PRSs at the Laboratory, including the PRSs in this report, will be evaluated using this new methodology. Therefore, the results presented for all previous ecological screening assessments in RFI reports are no longer relevant.

NMED Comment:

3.3: Risk Assessment Methodology, 3-22

"No human health risk assessments are presented in this report."

43. LANL must explain why no human health risk assessments are presented in this report. This is especially confusing in light of the fact that the Work Plan requires a human health risk assessment prior to recommending the No Further Action (NFA) alternative, and NFA is proposed in the report without benefit of a risk assessment.

LANL Response:

All PRSs are initially evaluated for human health risk by the risk-based screening assessment process. The screening assessment uses the screening action levels (SALs) to identify chemicals of potential concern (COPCs) at a PRS. The SALs are obtained from the annual U.S. Environmental Protection Agency (EPA) Region 9 preliminary remediation goals (PRGs) tables (EPA 1995, 1307; EPA 1996, 1351). The SALs used in the screening assessment are the EPA Region 9 residential PRGs listed in these tables. The risk-based values are derived using the latest verified toxicity information from IRIS (EPA 1996, 1313), HEAST (EPA 1995, 1310), or EPA's National Center for Environmental Assessment (NCEA) for each chemical, default exposure factors obtained from EPA documents (Cowherd et al. 1985, ER ID No. XXXX; EPA 1989, 0305; EPA 1991, 0746; EPA 1991, 0302; EPA 1992, 1012; EPA 1996, ER ID No. XXXX) and the California EPA Guidance Manual (California EPA 1994, ER ID No. XXXX), and include the ingestion, inhalation, and dermal exposure pathways. The values presented in the tables represent a hazard quotient of one for noncarcinogens or are associated with a one in one million (10^{-6}) lifetime excess cancer risk for carcinogens. The hazard quotient of one represents the level of exposure to a chemical from all significant pathways in a given medium above which there may be a potential for health effects and below which it is unlikely for even sensitive populations to experience adverse health effects (EPA 1989, 0305; EPA 1991, 0302). The incremental cancer risk of 10^{-6} is at the lower end of EPA's target risk range of 10^{-4} to 10^{-6} (EPA 1990, 0559). If the cumulative carcinogenic risk is greater than 10^{-4} or the cumulative noncarcinogenic hazard index is greater than one, some sort of additional action at that site is warranted. If the cumulative cancer risk is within the range of 10^{-4} to 10^{-6}, the need for additional action is a site-specific decision. In general, if the cumulative cancer risk is less than 10^{-6} and the hazard index is less than one, no further action is warranted. Therefore, the NFA recommendations in this RFI report are based on a human health risk comparison which has found that there is no unacceptable risk to human health as a result of exposure to the chemicals present at these sites.

References:

California EPA, 1994. "Preliminary Endangerment Assessment Guidance Manual," Department of Toxic Substances Control, Sacramento, California. (California EPA 1994, ER ID No. XXXX)

Cowherd, C., Muleski, G., Engelhart, P., and Gillete, D., 1985. Rapid Assessment of Exposure to Particulate Emissions from Surface Contamination. EPA/600/8-85/002. Prepared for the EPA Office of Health and Environmental Assessment, Washington, D.C. (XXXX)

EPA (US Environmental Protection Agency), December 1989. "Risk Assessment Guidance for Superfund, Volume I, Human Health Evaluation Manual (Part A)," Interim Final, EPA 540/1-89/002, Office of Emergency and Remedial Response, Washington, DC. (EPA 1989, 0305)

EPA (US Environmental Protection Agency), March 8, 1990. "National Oil and Hazardous Substances Pollution Contingency Plan," Final Rule, 40 CFR Part 300, Federal Register, Vol. 55, No. 46, p. 8666. (EPA 1990, 0559)

EPA (US Environmental Protection Agency), March 25, 1991. 'Risk Assessment Guidance for Superfund, Volume I: Human Health Evaluation Manual, Supplemental Guidance "Standard Default Exposure Factors," Interim Final,' OSWER Directive 9285.6-03, Office of Emergency and Remedial Response, Toxics Integration Branch, Washington, DC. (EPA 1991, 0746)

EPA (US Environmental Protection Agency), December 1991. "Risk Assessment Guidance for Superfund, Volume I—Human Health Evaluation Manual (Part B, Development of Risk-Based Preliminary Remediation Goals)," Interim, EPA/540/R-92/003, Publication 9285.7-01B, Office of Research and Development, Washington, DC. (EPA 1991, 0302)

EPA (US Environmental Protection Agency), January 1992. "Dermal Exposure Assessment: Principles and Applications," Interim Report, EPA/600/8-91/011B, Office of Research and Development, Washington, DC. (EPA 1992, 1012)

EPA (U.S. Environmental Protection Agency), May 1995. "Human Health Effects Assessment Summary Tables (HEAST)." Office of Health and Environmental Assessment, Environmental Assessment and Criteria Offices, Cincinnati, OH. (EPA 1995, 1310)

EPA (US Environmental Protection Agency), September 1, 1995. "Region IX Preliminary Remediation Goals (PRGs) Second Half 1995," ER ID No. 53970, San Francisco, California. (EPA 1995, 1307)

EPA (US Environmental Protection Agency), August 1, 1996. "Region 9 Preliminary Remediation Goals (PRGs)," San Francisco, California. (EPA 1996, 1351)

EPA (US Environmental Protection Agency), 1996. "Integrated Risk Information System (IRIS)," Office of Science and Technology, National Technical Information Service, Springfield, Virginia. (EPA 1996, 1313)

EPA (Environmental Protection Agency) 1996. Soil Screening Guidance: Technical Background Document. EPA/540/R-95/128. Office of Remedial Response, Washington, D.C. (XXXX)

NMED Comment:

3.4: Development of Conclusions and Recommendations, Page 3-22

"Field screening was used to bias samples sent for fixed laboratory analysis, as well as to determine the areal distribution of the contamination."

44. See General Comment 10.

LANL Response:

See response to General Comment 10.

NMED Comment:

CHAPTER 4.0: SITE-SPECIFIC RESULTS, CONCLUSIONS, AND RECOMMENDATIONS

"The purpose of sampling at the locations covered by this report was to determine whether any chemical, radioactive, or HE contamination could be found at TA-15."

45. See General Comment 4.

LANL Response:

See response to General Comment 4.

NMED Comment:

4.1: PRS 15-004(b,c): Firing Site A-B

4.1.1: Previous Investigations, Page 4-4

"No SVOCs were detected, and Toxicity Characteristic Leaching Procedure (TCLP) test results for metals were below EPA guidelines."

46. TCLP analyses are not to be used for site characterization.

LANL Response:

LANL agrees with the above statement. As the heading for this section indicates, the information presented are the results of investigations at this site prior to the start of Phase I activities. These results were not used to characterize the site but rather to obtain information, if available, regarding the general level and type of contamination that might be encountered.

NMED Comment:

"VOCs and SVOCs were not expected at this PRS and were not included in analytical tests."

47. However, the fourth paragraph of page 4-3 begins; "Information regarding COPCs used at these firing sites is minimal,..." This seems contradictory with the above statement. LANL must explain why VOCs and SVOCs were not expected at this site.

LANL Response:

The nature of the PRS (i.e., a firing site) influences the type of materials used and, therefore, the contaminants that may be present. There is some information available from the individuals who worked at the site as well as information regarding the types of experiments conducted. The combination of the type of activity and the user knowledge forms the basis for suspected potential contaminants at the firing site. Based on this information, metals, HE, and uranium are the potential contaminants at this PRS, while VOCs and SVOCs, which were never used as part of the experiments at A-B Site, were not analyzed for. See response to Attachment 1, Comment 1.

NMED Comment:

4.1.3: Screening Assessment, Page 4-6

"The QA/QC assessment of the data associated with the collected samples indicates that the analytical results were acceptable, except for eight samples in which arsenic may be present at concentrations greater than background and HE data that exceeded holding times."

48. LANL must resample this PRS for arsenic and HE.

LANL Response:

See responses to Specific Comments 18 and 19.

NMED Comment:

"Arsenic is not considered to be present at the site as a result of site activities and is thus not considered in the screening assessment."

49. However paragraph 4 of page 4-3 begins; "Information regarding COPCs used at these firing sites is minimal,...". This seems contradictory with the above statement. LANL must provide evidence for not considering arsenic to be present.

LANL Response:

There is some information available from interviews with the individuals who worked at the site as well as general information regarding the types of experiments conducted. The combination of the type of activity and the user knowledge forms the basis for Section 8.3.1, Site Description, History, and Potential Source Terms, in the RFI work plan (LANL 1993, 1087), which indicates that uranium, beryllium, lead, and mercury were the potential contaminants at this site. The site information obtained from the workers at the firing sites at TA-15, which apparently is the only evidence available, was used to conclude that arsenic was not used in the explosives testing and would therefore not be present at concentrations above background. A memorandum from Roger Rasmussen, a retired DX Division scientist familiar with the activities at TA-15, to Gene Gould of Field Unit 2 regarding the possible use of arsenic at TA-15 is provided in Attachment 4. However, despite this assumption the samples collected from this PRS were analyzed for arsenic as well as other TAL metals. The results of the sampling indicated that arsenic was detected at concentrations that were representative of arsenic levels across TA-15 and not present at elevated concentrations (see response to Specific Comment 16 and 18). Therefore, arsenic was eliminated from further evaluation because it was not detected at concentrations of concern.

NMED Comment:

<u>4.1.3.2: Data Interpretation, Page 4-11</u>

"Extension of the XRF sampling northward has roughly bounded elevated lead concentrations. As shown in figure 4-1, the hot spots are geographically nearer PRS 15-004(b) than 15-004(c)."

50. See General Comment 10.

LANL Response:

This site was recommended for a voluntary corrective action (VCA) based on the results of the Phase I investigation. The XRF screening was conducted during the Phase I investigation to obtain an approximate picture of the area to be remediated once lead contamination had been found using the fixed analytical results. The subsequent VCA at this site utilized field screening and confirmatory samples submitted to a fixed analytical laboratory to definitively define the extent of lead contamination as well as confirm that the area had been remediated. The results of

the confirmatory sampling indicated that the lead levels at this PRS were below the PRG and that the extent of the contamination had been determined. See also response to General Comment 10.
NMED Comment:

"Lead concentrations of up to 651, 885, and 1593 ppm for successively northward hotspots are revealed by XRF data. The highest value of lead discovered so far approaches 4 times the SAL and confirms the extent of lead on site at concentrations of potential concern."

51. See General Comment 10.

LANL Response:

See responses to Specific Comment 50 and General Comment 10.

NMED Comment:

4.1.3.4: Ecotoxicological Screening Assessment, Page 4-12

"All inorganic COPCs detected in soil samples taken at Firing Site A-B..."

52. Arsenic has been inappropriately discarded as a COPC.

LANL Response:

See response to Specific Comment 42.

NMED Comment:

"Analyses for organic chemicals and HEs were not conducted on samples from Firing Site A-B."

53. HE analysis **was** conducted for this PRS, but the samples exceeded holding times. LANL must explain this statement.

LANL Response:

The quoted statement is not correct and is modified as follows:

Analysies for ~~organic chemicals and~~ HEs ~~were not~~ *was* conducted on *a* samples ~~from~~ Firing Site A-B. *Analyses for other organic chemicals were not conducted.*

However, the HE data are qualified as "R" and the area needs to be resampled for HE (see response to Specific Comment 19). Once valid HE data are obtained from a fixed analytical laboratory, the ecological risk assessment team will be informed if HE needs to be included in the ecological risk assessment conducted on this site using the new ecological risk assessment methodology.

NMED Comment:

4.1.4: Conclusions and Recommendations, Page 4-12

"Additional field XRF screening in the vicinity of the three lead hotspots north of PRS 15-004(b) during 1995 has defined the extent of soil contamination,..."

54. See General Comment 10.

LANL Response:

See responses to Specific Comment 50 and General Comment 10.

NMED Comment:

"Surface soils at Firing Site A-B contain barium, cadmium, copper, lead, mercury, and uranium levels that exceed screening criteria for reproductive and survival effects on vertebrates. Phytotoxicity criteria also were exceeded,... The significance that these COPCs hold for the long-term persistence of resident plan and animal populations cannot be adequately assessed in a screening assessment and must be addressed in a baseline ecological risk assessment."

55. These statements demonstrate that proposing NFA for this PRS is inappropriate. Also, the RFI Work Plan stipulates that a human health risk assessment will be performed prior to NFA proposal.

LANL Response:

The NFA proposed for PRS 15-004(c) (Firing Site B) was based only on human health. See responses to Specific Comments 42 and 43.

NMED Comment:

Table 4-4: Comparisons of ESALs with Data From Firing Site A,B, Page 4-13

56. See General Comment 10.

LANL Response:

The data used for comparisons are the results of the samples sent to the fixed analytical laboratories. The ESAL comparisons are not relevant and these PRSs will be re-evaluated using the new ecological risk assessment methodology.

NMED Comment:

4.2: PRS 15-004(a,d) Firing Site C

4.2.3: Screening Assessment Results for Firing Site C 15-004(a,d), Page 4-16

"The QA/QC assessment of the data associated with the collected samples indicates that the analytical results were acceptable, except for three mercury samples which were qualified as R, eight arsenic samples that may be present at concentrations greater than background and HE data that exceeded holding times."

57. LANL must resample this PRS for mercury, arsenic and HE.

LANL Response:

The above quote was incorrect in the RFI report in that HE was not analyzed by a fixed laboratory for PRS 15-004(a,d). This PRS will be resampled and the samples sent to a fixed laboratory for HE analysis. See responses to Specific Comments 16 and 17 for arsenic and mercury.

NMED Comment:

"Arsenic is not considered to be present at the site as a result of site activities and is thus not considered in the screening assessment."

58. LANL must provide evidence for not considering arsenic to be present.

LANL Response:

The only available evidence regarding the presence of arsenic as a result of site activities is apparently from the interviews with the individuals who worked at the site as well as general information regarding the types of experiments conducted. The combination of the type of activity and the user knowledge forms the basis for Sections 8.3.1 and 8.4.1, Site Description, History, and Potential Source Terms, in the RFI work plan (LANL 1993, 1087), which indicates that uranium, beryllium, lead, and mercury were the potential contaminants at this site. The site information obtained from the workers at the firing sites at TA-15 was used to conclude that arsenic was not used in the explosives testing and would therefore not be detected at concentrations above background. However, despite this assumption the samples collected from this PRS were analyzed for arsenic as well as other TAL metals. The results of the sampling indicated that arsenic was detected at concentrations that were representative of arsenic levels across TA-15 and not present at elevated concentrations (see response to Specific Comment 16 and 18). Therefore, arsenic was eliminated from further evaluation because it was not detected at concentrations of concern. See also memorandum referenced in Specific Comment 49 and provided in Attachment 4.

NMED Comment:

"Analyses for organics chemicals and HEs were not conducted on samples from Firing Site C."

59. See Specific Comment 53.

LANL Response:

This statement is correct. The samples collected at this site were not analyzed for HE by the fixed analytical laboratory due to an oversight. LANL will resample the site and submit these samples to the fixed laboratory for HE analysis.

NMED Comment:

Table 4-5: Firing Site C PRS 15-004(a,d), Pages 4-18 and 4-19

60. See General Comment 11.

LANL Response:

See response to General Comment 11.

NMED Comment:

4.2.3.2: Data Interpretation, Page 4-21

"The data show elevated levels of copper, lead, mercury, and uranium, but none at levels of concern for human health. There are no COPCs for this site."

61. Based on Ecotoxicological Screening Assessment, copper, lead and uranium are COPCs. LANL must clarify this statement.

LANL Response:

Section 4.2.3.2 Data Interpretation is related to the human health screening assessment only. The statement in question refers to human health concerns and makes no mention of ecological risk, which is addressed in Section 4.2.3.4. Based only on the human health screening assessment, there are no human health COPCs for this site. See also response to Specific Comment 42.

NMED Comment:

62. See Specific Comment 52 and General Comment 12.

LANL Response:

See responses to Specific Comment 52 and General Comment 12.

NMED Comment:

4.2.3.4: Ecotoxicological Screening Assessment, Page 4-21

"All inorganic COPCs detected in soil samples taken at Firing Site C and exceeding their natural background UTLs (Section 4.2.3.1) were compared to ecotoxicological screening criteria (Table 4-7)."

63. See Specific Comment 52.

LANL Response:

See response to Specific Comment 42.

NMED Comment:

"Analyses for organic chemicals and HEs were not conducted on samples from Firing Site C."

64. See Specific Comment 53.

LANL Response:

See response to Specific Comment 53.

NMED Comment:

4.2.4: Conclusions and Recommendations, Page 4-23

"15-004(a,d) is an inactive firing site with no COPCs based on human health concerns."

65. See Specific Comment 52.

LANL Response:

See responses to Specific Comments 16 and 42.

NMED Comment:

"No further action is proposed for this based on human health screening.

Surface soils at Firing Site C contain lead and uranium levels that exceed screening criteria for reproductive and survival effects on vertebrates. Phytotoxicity criteria also were exceeded to a lesser degree,... The significance that these COPCs hold for the long-term persistence of resident plan and animal populations cannot be adequately assessed in a screening assessment and must be addressed in a baseline ecological risk assessment."

66. See Specific Comment 55.

LANL Response:

As the first sentence states, the NFA proposed for PRS 15-004(a,d) (Firing Site C) was based only on human health. See responses to Specific Comments 42 and 43.

NMED Comment:

4.3: E-F Aggregate (15-004[f], 15-009[e], C-15-004)

4.3.2 Field Investigation, Page 4-24

"The objectives of the Phase I sampling were to determine the extent, concentration, and depth of any COPCs at this site."

67. See General Comment 4.

LANL Response:

See response to General Comment 4.

NMED Comment:

"Samples were obtained from the surface (0-6 in) and/or subsurface or refusal (18-24 in) using the spade and scoop technique and hand augering, respectively..."

68. See General Comment 5.

LANL Response:

See response to General Comment 5.

NMED Comment:

"The QA/QC assessment of the data associated with the collected samples indicates that the analytical results were acceptable, except for 27 antimony samples and ten mercury samples that were considered unusable, two cadmium samples that may be present at concentrations greater than its SAL, and HE data that exceeded holding times."

69. LANL must resample this PRS for antimony, mercury, cadmium and HE.

LANL Response:

See responses to Specific Comments 20, 21, 22, and 23.

NMED Comment:

4.3.3.1: Comparison to Background/SALs, Pages 4-26 to 4-28

"All inorganic COPCs detected in soil samples taken at E-F Aggregate were compared with their natural background UTLs."

70. Cadmium has been inappropriately discarded as a COPC.

LANL Response:

See response to Specific Comment 21.

NMED Comment:

"Because of the large size of this site, it is appropriate to follow the first-stage MCE by a second, more accurate representation of the worst-case scenario."

71. LANL must explain why the second MCE is more accurate.

LANL Response:

The MCE is used in the screening assessment to evaluate chemicals that were detected below their SALs and above background in order to address the possibility of adverse health effects from combined exposure. The MCE involves dividing the maximum detected concentration of each chemical by its respective SAL to obtain a "normalized" value, which is a fraction of the SAL.

The "normalized" values are then summed and compared to a target value of 1. If the sum of the maximum normalized values is greater than 1, the appropriateness of this sum-of-maximum approach is evaluated on a site-by-site basis using professional judgment. For example, if the PRS is larger than a predicted exposure unit, an additional evaluation may be done using the maximum sum of normalized values at a sample location to provide a more realistic potential for exposure. If the results of this latter analysis also suggests that the multiple chemical exposure may be of concern (i.e., sum is greater than 1), then the constituents with individual normalized values greater than or equal to 0.1 are retained as COPCs and evaluated further. The final decision to retain a constituent as a COPC for further evaluation will also depend on other site-specific considerations and the professional judgment of the risk assessor. Constituents with normalized values less than 0.1 are eliminated from further evaluation (Dorries 1996, 1297).

For the E-F Aggregate [PRSs 15-004(f), 15-009(e), 15-008(a), and C-15-004], the data were collected over a 60 acre area. The sum-of-maximum approach for calculating the MCE is a good first screen, but implies that a receptor could be subject to exposure to the contamination from all sample locations at one time. Although the SALs used by LANL in the screening assessment are based on conservative assumptions of exposure frequency and duration, i.e., time spent at a site, it is not possible for a receptor to be exposed to each sample location over a large area simultaneously. In fact, the worst case exposure would occur if the receptor was positioned at the worst sample location (i.e., the sample location with the highest normalized sum) and remained at this site for the duration of the exposure. Therefore, because of the size of the E-F Aggregate, the second approach to conducting the MCE described above was implemented. PRSs 15-004(f), 15-009(e), and 15-008(a) have been recommended for remediation based on the results of the screening assessments in the RFI report.

Reference:

Dorries, A. M. (Ed.), June 1, 1996. "Risk-Based Corrective Action Process," Revision 1, Los Alamos National Laboratory Report LA-UR-96-2811, ER ID No. 52290, Los Alamos, New Mexico. (Dorries 1996, 1297)

NMED Comment:

72. LANL must explain how a less conservative approach to the MCE can still be considered a "worst-case" scenario.

LANL Response:

See response to Specific Comment 71.

NMED Comment:

4.3.3.1: Organics, Page 4-27

73. Two samples taken below the former transformer location at AOC 15-004 were analyzed for PCBs. The report states that no PCBs were measured but the data are not reported. The PCB results should be reported in the appendices with the other data results. LANL shall state why two samples from the same location of this PRS are sufficient. Information on the sample depths of PCB soil samples should be provided.

LANL Response:

Two samples were considered sufficient because of the small area beneath the transformer station. However, as stated previously in response to Specific Comment 9, the drainage area should have been sampled. LANL will collect samples from this area.

The PCB results are provided in Appendix A of the RFI report along with the other analytical data on page A-109. The results presented in Appendix A of the report provide the depths at which the samples were taken, i.e., 0-4 inches. Figure 4-6 on page 4-45 of the report is incorrect because it does not indicate the sample locations at AOC 15-004. Two samples were collected from AOC 15-004 at two different sample locations (sample locations 15-2232 and 15-2233). The modified figure is provided in Attachment 5. See response to Specific Comment 9.

NMED Comment:

4.3.3.1: Multiple Chemical Evaluation (MCE), Page 4-28

74. Since the non-carcinogenic SAL has been exceeded in the E-F Aggregate for several inorganics (copper and manganese) and a normalized value would already exceed 1 for each of these inorganics, an MCE should consider the total contribution of all non-carcinogenic analytes and to what degree each analyte contributes to the total potential hazard.

LANL Response:

The screening assessment of the E-F Aggregate resulted in four analytes, beryllium, copper, manganese, and uranium, being retained as COPCs because detected concentrations were found to exceed their respective SALs. An MCE was conducted on those noncarcinogens that were detected below their respective SALs in order to determine if there was a potential risk of combined effects. The resulting normalized sum presented in Table 4-12 was found to be less than 1.0 (0.88) so these noncarcinogenic analytes were not evaluated further. The major contributors to the normalized sum were antimony, barium, cadmium, and lead, which had normalized values of approximately 0.1 to 0.3. These analytes were not considered to be COPCs because their contribution to the overall risk at concentrations one tenth to one third of their SALs was small compared to the potential risk of the analytes detected above SALs.

If a risk assessment were performed on this site, some or all of these analytes may be included in estimating the potential risk, especially if the chemicals share the same toxic endpoint or mechanism of action (EPA 1996, ER ID No. XXXX). However, this site has been recommended for cleanup based on the four COPCs mentioned above and would not have been influenced by the addition of analytes from the MCE. In addition, because this site is within the secured boundaries of TA-15 and will not be released to the public, the proposed cleanup will be performed based on an industrial land use scenario using industrial preliminary remediation goals (PRGs). The confirmatory samples submitted to the analytical laboratory following cleanup to determine if the soil has been remediated and COPCs are below the industrial PRGs, will be analyzed for target analyte list (TAL) metals. As a result, the concentrations of all metals in the soil will be determined and the potential overall risk can be properly evaluated following remediation of the site.

Reference:

EPA (Environmental Protection Agency), July 1996. Soil Screening Guidance: Fact Sheet. EPA/540/F-95/041. Office of Solid Waste and Emergency Response, Washington, D.C. (XXXX)

NMED Comment:

75. Each individual inorganic should be investigated for its percent contribution to a normalized value of 1 and the decision to continue to include an inorganic as a COPC be based on some percentage contribution to a normalized value of 1 that the risk manager agrees to.

LANL Response:

The comment suggests screening to a level that is less than SALs, or the incorporation of a safety factor into the screening process. LANL believes that the present approach is consistent with current scientific opinion on the evaluation of chemical mixtures. LANL has reviewed the current procedure and done a literature search to evaluate the current thinking of the toxicological community to ensure this approach is still considered protective of human health and the environment. As with all approaches used in the risk-based decision process, new information and professional opinions are reviewed by the risk team and used to revise procedures as necessary. At a recent symposium, the Toxicology Committee of the International Union of Pure and Applied Chemistry (IUPAC) concluded with the following statement on evaluation of chemical mixtures: "In setting exposure limits for individual chemicals, the use of an additional safety factor to compensate for potential increased risk due to simultaneous exposure to other chemicals, has no clear justification" (Henschler et al., 1996, ER ID No. XXXX). This conclusion is echoed in a recent review on evaluating risks from chemical mixtures that concludes, "The introduction of a special safety factor of 10 for the standard setting for mixtures in addition to those normally used for deriving acceptable daily intakes, reference doses or minimal risk levels is not supported by data." (Bolt 1996, ER ID No. XXXX). A recent search on toxicity of chemical mixtures indicated that when daily intakes of individual chemicals were below the health based criteria such as the EPA reference doses, the potential for additive and multiplicative effects was unlikely to result in toxicity when multiple contaminants were present. Therefore, the uncertainty factors and modifying factors incorporated in the health-based standards combined with the initially conservative exposure assumptions used in the residential screening scenario, professional toxicological judgment, and sampling biased to capture representative maximum contaminant concentrations should result in identifying those contaminants that present health risks at a site without a need for additional conservatism.

The current review indicates that the LANL procedure will be protective because the SAL comparisons are based on not exceeding a reference dose when a maximum detected concentration is assumed to be distributed through the exposure area and conservative generic exposure assumptions are used. Actual site activities are assumed to lead to lower exposures when site-specific criteria and more representative contaminant concentrations are evaluated. Current scientific opinion indicates that EPA reference doses are protective of human health even when exposures to multiple contaminants below the reference doses occur.

References:

Bolt, H. M. and M. M. Mumtaz, 1996. "Risk Assessment of Mixtures and Standard Settings: Working Towards Practical Compromises," Food Chem. Toxicol. 34(11-12): 1179-1181.

Henschler, D., H. M. Bolt, D. Jonkers, M. N. Pieters, and J. P. Groten, 1996. "Experimental Designs in Risk Assessment in Combination Toxicology: Panel Discussion," Food Chem. Toxicol., November - December 34(11-12), 1183-1185.

NMED Comment:

Table 4-8: Firing Site E-F PRS 15-004(f), Page 4-29.

Table 4-9: E-F Site PRS 15-008(a), Page 4-40.

Table 4-10: Septic System PRS 15-009(e), Page 4-42.

Figure 4-4: Locations of samples above background, Page 4-43.

Figure 4-5: Locations of samples above background, Page 4-44.

Figure 4-6: Locations of samples above background, Page 4-45.

76. See General Comment 11.

LANL Response:

See response to General Comment 11.

NMED Comment:

4.3.3.1: Multiple Chemical Evaluation (MCE), Page 4-46

77. Table 4-11 lists the normalized values of the MCE for the E-F Aggregate for the cumulative maximum normalized value for the entire site. Table 4-12 lists the normalized values of the MCE for the E-F Aggregate for the sample area within the entire site with the highest normalized value. Given this, the values in Table 4-12 should either be equal to or less than the values in Table 4-11. This is not the case for antimony. LANL shall verify the values and correct these tables where appropriate.

LANL Response:

In verifying all of the normalized values used in the MCE tables, it was found that the normalized value for antimony for sample AAB3516 in Table 4-12 was calculated using the detection limit of 3.8 mg/kg because antimony was undetected in this sample. The detection limit of 3.8 mg/kg used for the normalized value of antimony in Table 4-12 was greater than the highest detected value for antimony (1.77 mg/kg) used in the calculation of the normalized value in Table 4-11. As a result, the normalized value for antimony in Table 4-12 (0.1226) is correct and conservatively set at the limit of detection, but higher than the normalized value for antimony in Table 4-11 (0.0571).

NMED Comment:

4.3.3.2: Data Interpretation, Page 4-47

"The values on the map are from fixed lab analyses wherever a sample was sent in for analysis, from the historical data used by White et al. (1980, 0771), and from predicted values of total uranium based on the XRF values reported by the chemistry van (see Appendix C)."

78. See General Comment 10.

LANL Response:

See response to General Comment 10.

NMED Comment:

"... and AOC 15-004 has no COPCs."

79. See Specific Comment 9.

LANL Response:

See responses to Specific Comment 9 and General Comment 4.

NMED Comment:

80. Please clarify why Figure 4-6 shows locations of samples above background if AOC 15-004 has no COPCs.

LANL Response:

The sample location IDs presented on Figure 4-6 are for PRS 15-009(e), the septic system, and not for AOC 15-004. No sample locations are presented on the map for this site. The map has been corrected to include the sample locations for C-15-004 and provided to NMED in Attachment 5.

NMED Comment:

4.3.3.4: Ecotoxicological Screening Assessment, Page 4-47

81. LANL may need to reevaluate the ecotoxicological effects of this site once an eco-risk approach has been agreed to by all parties.

LANL Response:

See response to Specific Comment 42.

NMED Comment:

Table 4-14: Comparisons of ESALs... PRS 15-004(f), Page 4-49

82. Please explain why no sample depths are given for several samples.

LANL Response:

The omission of sample depths for some samples in this table was an error. However, because a new ecological risk assessment methodology is being developed, this table is no longer relevant and will not be amended. See response to Specific Comment 42.

NMED Comment:

83. See General Comment 10.

LANL Response:

All of the data presented in the table are from the samples submitted to the fixed analytical laboratories. See responses to General Comment 10 and Specific Comment 42.

NMED Comment:

4.3.3.4: Ecotoxicological Screening Assessment, Page 4-57

"No organics or HEs were detected in samples from the E-F Firing Site."

84. LANL shall not state that an analyte is not detected when that analyte has experienced QA/QC problems (HE in this instance).

LANL Response:

There were some HE samples that did not have holding time problems and no HE compounds were detected. In addition, all HE spot test results on the samples collected were negative. See also response to Specific Comment 42.

NMED Comment:

4.3.4: Conclusions and Recommendations, Page 4-57

"No further action is proposed for AOC 15-004. The only suspected contaminant from the transformer station was PCBs, and none were detected."

85. See Specific Comment 9. Also, the RFI Work Plan stipulates that a human health risk assessment will be performed prior to NFA proposal.

LANL Response:

See responses to Specific Comment 9 and 43. A human health screening assessment or risk assessment cannot be performed when all of the analytical results indicate that the analytes were below appropriate detection limits. Therefore, because no COPCs were detected, NFA for human health was recommended for this site.

NMED Comment:

"A VCA is recommended for Septic Tank 15-009(e) to remove the sludge and liquid, removing the opportunity for leakage from the tank."

86. LANL has not demonstrated that leakage has not already occurred. The proposed VCA will investigate the soil under the tank, related piping and outfall.

LANL Response:

See response to Specific Comment 3.

NMED Comment:

4.4.2: Field Investigation, Page 4-60

"Because most of the materials in the landfill came from PHERMEX, the major contaminants were known..."

87. LANL must include an explanation of process knowledge for wastes produced at PHERMEX.

LANL Response:

A site description and the potential source terms for PHERMEX are presented in Sections 6.2.1 and 6.2.2 of the RFI work plan for OU 1086. These sections are provided below. The area is a firing site and the potential contaminants for PHERMEX are depleted uranium, beryllium, mercury, lead, thorium, and residual HE contamination. However, the experiments at TA-15 were not intended to investigate explosives but rather, used explosives with well-established properties, making residual HE contamination unlikely.

6.2.1 Site Description

For the past two decades, PHERMEX Facility has been used to examine the performance of new Los Alamos nuclear weapon designs and all major changes to stockpile weapons through a process called dynamic radiography. In dynamic radiography, PHERMEX is used to produce extremely short-duration bursts of X-rays. After passing through the test object during the explosion, the X-rays are recorded on film as an image of the test device at a preselected time.

Although PHERMEX does have an interim status permit for disposal by detonation of waste HE scraps, the facility has never been used for this purpose. The SWMU associated with this activity is 15-003. SWMUs 15-006(a)and 15-003 are at the identical location at PHERMEX and should be included as a single SWMU.

6.2.2 Potential Source Terms

As a firing site, PHERMEX has the potential for depleted uranium (DU), beryllium, lead, mercury, thorium, and residual HE contamination. Because HE contamination has not been observed at firing sites such as these on TA-15 (DOE 1989, 0271), the likelihood of HE contamination being found here is small. Experiments at TA-15 were not intended to investigate explosives but, rather they used explosives with well-established properties, making residual HE contamination unlikely. Nevertheless, spot tests for HEs should be undertaken at D&D.

During the time period 1961 through 1971, a maximum of 4000 kg of depleted uranium was expended on the PHERMEX site (Venable 1990, 10-0010). During that same time period, about 150 kg of beryllium, 250 kg of lead, 40 kg of mercury, and 40 kg of thorium were expended. Since 1971, less that 1000 kg per year of uranium-238 has been expended on the PHERMEX firing site. Beryllium usage has decreased from about 10 kg per year in 1971 to about 3 kg per year in 1987.

The EG&G aerial survey results [Fritzsche 1989, 10-0033 (Appendix H)] show that in 1982 the PHERMEX site contained the second largest concentration of Pa-234m (and thus U-238) in the soil surface of all the firing sites on OU 1086. These results were used to estimate that PHERMEX contained one-seventh of the amount of radioactive material on Firing Site E-F. This is within a factor of 2 of the ratio estimate from maximum possible expended quantities of uranium from inventory lists (Venable 1990, 10-0010). This is reasonable confirmation of the quantity of uranium on these two firing sites. Of the two firing sites, only the PHERMEX site has been used since 1982.

In the radiological survey of TA-15 conducted in 1991 (Schlapper 1991, 10-0009), contact exposure rates from background to as high as 5 mR/h could be found at selected locations on steel blast shields or mats at the PHERMEX firing point. These rates are due to the presence of large chunks of depleted uranium (DU) that were scattered during the explosions.

NMED Comment:

87a. To be sure of the major contaminants by process knowledge, LANL should be able to explain from where all, not most of the contaminants are derived.

LANL Response:

As with most landfills, waste from other sources besides PHERMEX may have been disposed of at PRS 15-007(b). The quote from the RFI report was meant to indicate that because PHERMEX was the major source of the debris, the major contaminants present are known. In fact, the RFI work plan states that all materials came from PHERMEX. However, because there was uncertainty in what all of the sources of wastes were as well as what the potential contaminants were, Phase I sampling was conducted at this site to identify the COPCs.

NMED Comment:

"Samples were obtained from the surface (0-6 in) and deep (18-24 in or refusal) using the surface scoop technique and hand auguring, respectively..."

88. See General Comment 5.

LANL Response:

The above quoted statement is followed by references to the LANL Standard Operating Procedures (SOPs) that pertain to these sampling techniques. See response to General Comment 5.

NMED Comment:

4.4.3: Screening Assessment Results for Material Disposal Area Z (15-007[b]), Page 4-61

"The QA/QC assessment of the data associated with the collected samples indicates that the analytical results were acceptable except for three acid semivolatile samples that were qualified as R."

89. See Specific Comment 25.

LANL Response:

See response to Specific Comment 25.

NMED Comment:

Table 4-16: MDA Z PRS 15-007(b), Page 4-63

90. See General Comment 11.

LANL Response:

See response to General Comment 11.

NMED Comment:

4.4.3.2: Data Interpretation, Page 4-68

"These results, however, may not necessarily be representative of the entire landfill, as no samples were collected from the interior."

91. This is contradictory to Section 4.4.2 Field Investigation; "The objectives of the Phase I sampling were to determine whether COPCs were present at concentrations above SALs in surface and near-surface soils at the landfill, and to determine their extent." LANL must explain why no samples were collected from the interior.

LANL Response:

Attempts to hand auger into the interior of the landfill were met with resistance due to the number of concrete blocks that had been disposed of in the landfill. As a result, no samples could be collected at depth from the interior. This PRS is currently scheduled to be remediated as part of a VCA. The current approach is to remove and dispose of the landfill contents. At that time, sampling of the soil will be performed and the results presented in the VCA Completion Report.

NMED Comment:

4.4.4: Conclusions and Recommendations, Page 4-69

"The location of the site makes it likely that COPCs may be transported to other locations, making them more available to ecological receptors."

92. LANL must investigate possible fate and transport of contaminants.

LANL Response:

See response to General Comment 4.

NMED Comment:

93. LANL must explain why transport to other locations would not make contaminants available to human receptors also.

LANL Response:

LANL agrees that transport may make contaminants available to human receptors. See response to General Comment 4.

NMED Comment:

Table 4-19: Comparisons of ESALs With Data From MDA Z, PRS 15-007(b), Page 4-70

94. See General Comment 11.

LANL Response:

See response to General Comment 11.

NMED Comment:

4.5: PRS 15-008(b) Surface Disposal Area at R-44, Page 4-73

"Consequently, some debris from the explosions has been scattered through the air into the canyons on either side of the firing site.

In addition, some of the material in the debris pile was pushed over the edge of the canyon, as can be seen by visual inspection."

95. This constitutes refuse in a watercourse, and under regulations established by the New Mexico Water Quality Control Commission (NMWQCC) in the State of New Mexico Standards for Interstate and Intrastate Streams, 20 New Mexico Administrative Code (MNAC), 6.2 Section 2201: "No person shall dispose of any refuse in a natural watercourse or in a location and manner where there is a reasonable probability that the refuse will be moved into a natural watercourse by leaching or otherwise."

LANL Response:

LANL is aware of the regulations regarding refuse in a watercourse as cited above. In recognition of this issue, best management practices (BMPs) have been installed at this PRS. Sandbags and hay bales have been placed as run-on and runoff controls along with a silt fence at this site. These BMPs are checked and maintained on a weekly basis and a monthly report is submitted to ESH-18, the Laboratory Water Quality Group, regarding the status of the BMPs. In addition, a VCA will be conducted at this PRS as well as the adjacent firing site [PRS 15-006(c)] to remove the debris and other contamination from the edge of the canyon. Further sampling has also been proposed for the canyon walls and bottom in an effort to characterize the extent of contamination from this area.

NMED Comment:

95a. This section of the report should contain figures, maps, or some method of viewing which canyons are being impacted.

LANL Response:

Appropriate maps depicting the surface disposal area, the firing site, and the surrounding area affected have been provided in Attachment 6. One map is an overview of the firing site and the surrounding area. The other map is a modification of the map in the RFI report that includes sample locations, topographic contours, and more of the immediate area around the surface disposal area.

NMED Comment:

96. See General Comment 4.

LANL Response:

See response to General Comment 4.

NMED Comment:

"The major potential pathway to receptors would occur by direct contact..."

97. Transport to receptors by surface water can not be ignored. LANL must investigate the fate and transport of contaminants from this PRS.

LANL Response:

LANL agrees with this statement, see the response to General Comment 4.

NMED Comment:

4.5.2: Field Investigation, Page 4-74

"The objectives of the Phase I sampling were to determine whether COPCs were present at concentrations above SALs in surface and near-surface soils at the disposal area."

98. This purpose statement would appear to address the Contaminant Sources Objective in the RFI Work Plan Table 4.2.2; SUMMARY OF GENERAL DATA NEEDS FOR THE TA-15 OU RFI. However, the Objectives of Contaminant Migration, umber 1., "Identify any migration of contaminants at each PRS.", and Baseline Risk Assessment, number 2., "Determine contaminant fate and transport.", are not adequately addressed.

LANL Response:

LANL acknowledges that these objectives have not been addressed. The RFI report of Phase I sampling was designed to determine the presence or absence of contamination at the site. This entire area was recommended for remediation (surface disposal area and firing site) and will

involve additional field screening and sample collection for confirmatory fixed analytical. In addition, an investigation of the canyon adjacent to these PRSs will be conducted, which will entail additional, extensive sampling of the canyon walls and the canyon bottom, including the stream channel. See response to Specific Comment 4.

NMED Comment:

"Because of the previous INEL investigation (DOE 1989, 0271) the major constituents were known..."

99. LANL must provide analytical data, methodology, instrumentation and QA/QC information if historical data is to be used to identify contaminants.

LANL Response:

The RFI report format includes a section summarizing previous investigations conducted at the PRS. These investigations include any pre-RFI studies, e.g., the INEL investigation referenced in the report. The INEL report included sampling data for firing site R-44 [PRS 15-006(c)] for which PRS 15-008(b) is a surface disposal area. The results of the INEL investigation were used as a starting point for determining the potential contaminants at the site as a result of the sampling at R-44, which is in accordance with the Risk-Based Corrective Action Process (RBCAP) (Dorries 1996, 1297). The RBCAP states that historical process knowledge and screening samples can be sufficient to focus the analyses of samples to those chemicals that are plausible at a site, rather than performing a full-scan analysis of all samples. The INEL report indicated that the soil samples from the firing site contained barium, beryllium, chromium, copper, lead, and zinc and that high explosives were not detected in any of the samples collected. LANL used this information only as a guide for selecting the analytical suites for the samples collected during the RFI investigation in order to ensure that these potential contaminants were considered. Based on this information as well as knowledge of site activities, the soil samples collected from the surface disposal area were analyzed for TAL metals, HE, gamma spectroscopy, and uranium. However, no COPCs were identified at this PRS until the analytical data from the samples collected during the Phase I investigation were subjected to the risk-based screening assessment. The COPCs retained at PRS 15-008(b) by this process were antimony, arsenic, beryllium, copper, lead, and uranium. The subsequent action recommended for this PRS is also based solely on the Phase I RFI screening assessment results. Because the information in the INEL report were not used as the mechanism to ultimately identify potential contaminants, the data from the INEL report were not included in the RFI report.

The INEL report consists of four volumes of information and data that summarizes the sampling and analyses for a number of different TAs at LANL, including the site at TA-15. LANL could supply all or parts of this report if necessary.

Reference:

Dorries, A. M. (Ed.), June 1, 1996. "Risk-Based Corrective Action Process," Revision 1, Los Alamos National Laboratory Report LA-UR-96-2811, ER ID No. 52290, Los Alamos, New Mexico. (Dorries 1996, 1297)

NMED Comment:

"Samples were obtained from the surface (0-6 in) and subsurface (18-24 in or refusal) using the spade and scoop technique and hand auguring, respectively..."

100. See General Comment 5.

LANL Response:

The above quoted statement is followed by references to the LANL Standard Operating Procedures (SOPs) that pertain to these sampling techniques. See response to General Comment 5.

NMED Comment:

"The QA/QC assessment of the data associated with the collected samples indicates that the analytical results were acceptable, except for two antimony samples and seven mercury samples that were qualified as R, two cadmium samples that may be present at concentrations greater than its SAL, and HE data that exceeded holding times."

101. LANL must resample this PRS for antimony, cadmium and mercury.

LANL Response:

See responses to Specific Comments 20, 21, and 26.

NMED Comment:

"Analyses for organic chemicals and HEs were not conducted on samples from the R-44 surface disposal area."

102. See Specific Comment 53.

LANL Response:

The quoted statement in the RFI report is not correct and is modified as follows:

Analys*ies* for ~~organic chemicals and~~ HEs ~~were not~~ *was* conducted on *a* sample~~s~~ from PRS 15-008(b). *Analyses for other organic chemicals were not conducted.*

HEs were analyzed for one sample and the recommended 14-day extraction holding time was exceeded by 19 days. However, the HE data are unqualified and therefore are deemed to be acceptable, valid data. See response to Specific Comment 23.

NMED Comment:

Table 4-20: R-44 PRS 15-008(b), Page 4-77

103. See General Comment 11.

LANL Response:

See response to General Comment 11.

NMED Comment:

4.5.3.2: Data Interpretation, Page 4-81

"These results, however, are not considered fully representative of the disposal area, as very few samples were collected from lower sections of the canyon or laterally along the face of the disposal area."

104. HRMB agrees that the results are not fully representative of the disposal area. No response is necessary.

LANL Response:

None

NMED Comment:

"Accordingly, further evaluation of this site has been delayed until May 22, 1996, when the report for the entire R-44 firing site will be submitted."

105. HRMB has no record of the submission of this report. Please submit it within thirty (30) days of receipt of this letter.

LANL Response:

The report referred to by this statement is the second TA-15 RFI report, which was submitted on May 22, 1996. LANL's intent at the time of the first TA-15 RFI report was to present the data collected at R-44 [PRS 15-006(c)] along with a discussion of the results and the recommendation for further investigation and remediation. However, in the interim between one report and the next, a new format was agreed upon with EPA Region 6 and instituted that changed the content of the RFI reports submitted in 1996 and beyond. The RFI reports were subsequently considered to be NFA reports that presented only the data for PRSs proposed for NFA or for further sampling. The policy for PRSs recommended for some type of voluntary corrective action (VCA) and/or interim action (IA) was to use the VCA or IA plans as the RFI report. All of the data collected during the Phase I investigation at the PRS are to be presented in the appropriate plan along with the results of the screening assessment. The result of this change in policy and report content was that the RFI report submitted on May 22, 1996 did not present any of the R-44 data, but only briefly summarized the COPCs identified and the proposed remedial action. The VCA for R-44 and the surface disposal area are currently scheduled for FY99. The VCA report for this area, therefore, has not been written and is not scheduled to be written until this time. Once the VCA Plan has been written and approved by DOE, the VCA Plan for R-44 will be provided to NMED.

NMED Comment:

4.5.3.4: Ecotoxicological Screening Assessment, Page 4-82

"Analyses for organic chemicals and HEs were not conducted on samples from the R-44 surface disposal area."

106. See Specific Comment 53.

LANL Response:

The quoted statement in the RFI report is not correct and is modified as follows:

Analys*ies* for ~~organic chemicals and~~ HEs ~~were not~~ *was* conducted on *a* sample~~s~~ from PRS 15-008(b). *Analyses for other organic chemicals were not conducted.*

HEs were analyzed for in one sample and the recommended 14-day extraction holding time was exceeded by 19 days. However, the HE data are unqualified and therefore are deemed to be biased low but acceptable data. See also responses to Specific Comments 23 and 42.

NMED Comment:

4.5.4: Conclusions and Recommendations, Page 4-82

"The location of the site makes it likely that COPCs may be transported to other locations, making them more available to ecological receptors,..."

107. LANL must investigate possible fate and transport of contaminants.

LANL Response:

See responses to General Comment 4 and Specific Comment 42.

NMED Comment:

108. LANL must explain why transport to other locations would not make contaminants available to human receptors also.

LANL Response:

LANL agrees that transport may make contaminants available to human receptors. See response to General Comment 4.

NMED Comment:

Table 4-22: Comparisons of ESALs With Data From R-44 Disposal Area, PRS 15-008(b), Page 4-83

109. See General Comment 11.

LANL Response:

See response to General Comment 11.

NMED Comment:

4.6: PRS 15-012(b) Operational Release, Page 4-86

"In this area, the explosives groups at the Laboratory washed out vessels used for explosives testing."

110. The question of what was used to wash out the vessels is not answered. Although HRMB has received verbal notification that water was used to wash out the vessels, LANL shall include this information in the amended report.

LANL Response:

This sentence is modified as follows:

In this area, the explosives groups at the Laboratory *used water to* washed out vessels used for explosives testing.

This information is also incorporated in the VCA Plan for PRS 15-012(b), which has been submitted to DOE for review.

NMED Comment:

"Samples were obtained from the surface (0-6 in) and subsurface (18-24 in) using the spade and scoop technique and hand auguring, respectively..."

111. See General Comment 5.

LANL Response:

The above quoted statement is followed by references to the LANL Standard Operating Procedures (SOPs) that pertain to these sampling techniques. See response to General Comment 5.

NMED Comment:

Table 4-23: R-183 Operational Release PRS 15-012(b), Page 4-90

112. See General Comment 11.

LANL Response:

See response to General Comment 11.

NMED Comment:

Table 4-25: Comparisons of ESALs With Data R-183 Operational Release, PRS 15-012(b), Page 4-93

113. See General Comment 11.

LANL Response:

See response to General Comment 11.

NMED Comment:

4.6.4: Conclusions and Recommendations, Page 4-94

"Based on the results of the screening assessment, an EC is recommended for the soil at PRS 15-012(b)."

114. HRMB has received notification from LANL that a Voluntary Corrective Action (VCA) is now planned for this PRS. This information shall be included in the amended report.

LANL Response:

The sentence is modified as follows:

Based on the results of the screening assessment, ~~an EC~~ *a VCA ~~is recommended for~~ will be conducted on* the soil at PRS 15-012(b) *during the summer of 1997.*

NMED Comment:

4.7: PRS 15-009(j), Inactive Septic System

4.7.2: Field Investigation, Page 4-95

"The objectives of the Phase I sampling were to determine whether contamination was present."

115. LANL has failed to demonstrate that contamination is absent in the soil under the tank, associated piping and fittings, or the outfall. HRMB understands that LANL plans to sample these areas to determine the presence or absence of contamination as part of a Voluntary Corrective Action (VCA) for this PRS. Please state this in the amended report.

LANL Response:

The following information is added to Section 4.7.5, Further Investigations, of the RFI report:

A voluntary corrective action (VCA) is planned for 15-009(j) for the summer of 1997. This VCA will involve the removal of the tank contents, pressure washing the interior of the tank and ultimately the removal of the septic tank. This septic tank is being removed because the facility has indicated that there are plans for expansion into this area and have agreed to assist in the tank removal. In addition, samples will be collected from soil in the area where the septic tank had been located. The subsequent sampling will include samples at the inlet, the outlet, and from each side of the tank at the tank bottom. Boreholes will also be drilled adjacent to each of the seepage pits and samples collected at 3 ft (below the inlet to the seepage pits), at 20 ft, and at 60 ft, which is below the depth of the seepage pits.

NMED Comment:

Table 4-26: Septic System PRS 15-009(j), Page 4-97

116. See General Comment 11.

LANL Response:

See response to General Comment 11.

NMED Comment:

4.7.3.4: Ecotoxicological Screening Assessment, Page 4-99

"An ecotoxicological screening assessment was not conducted for the contents of the tank because there is no pathway for exposure."

117. See Specific Comment 107.

LANL Response:

Additional samples will be collected from this PRS as part of the VCA to be conducted this summer. Fate and transport of materials would be addressed in subsequent actions if the sample results indicate that contamination may be present at this site. See responses to General Comment 4 and Specific Comment 42.

NMED Comment:

4.7.4: Conclusions and Recommendations, Page 4-99

"The tank will be pumped of its 2 inches of sludge and liquid and backfilled."

118. HRMB has been informed that LANL now plans to remove the tank as part of the VCA. Please state this in the amended report.

LANL Response:

See response to Specific Comment 115.

NMED Comment:

Appendix A

119. Explanations are needed for the column headers (e.g., "Begin", "End", etc.)

LANL Response:

Appendix A presents the analytical results for the samples collected at each site discussed in the RFI Report for TA-15. Several of the column headings are self-explanatory, i.e., analyte, location ID, sample ID*, sample value, background value, SAL value, units, sample location, and suite, while others may not be as clear. Column heading descriptions for these columns are as follows:

- **BEGIN** **beginning depth from which the sample was collected;**
- **END** **ending depth from which the sample was collected;**
- **UNITS** **the units that accompany the sample depths, i.e., inches (I), feet (ft);**

- MAT environmental matrix of the sample; SS indicates soil and W indicates water. The symbols do not differentiate sludge and water from the septic tanks, or surface and subsurface soils.
- S symbol column; blank, indicates a detection, "less than" symbol (<), indicates that the analyte was undetected.
- FIELD CODE identifies QA/QC samples collected during the field investigation.
  FD = field duplicate;
  EB = equipment blank;
  FB = trip blank and;
- LAB CODE identifies laboratory QA/QC samples.
  D = laboratory duplicate
- EPA QUAL qualifier column for data qualifiers provided following data validation.
  U = undetected;
  UJ = undetected estimated;
  J = estimated;
  R = unusable and;
- TECH CODE presents the analytical technique used in the analysis.
  ICPES = inductively coupled plasma emission spectroscopy;
  ICPMS = inductively coupled plasma mass spectroscopy;
  GFAA = graphite furnace atomic absorption;
  CVAA = cold vapor atomic absorption;
  ETVAA = electrothermal vaporization atomic absorption;
  RAS = radiochemical alpha spectroscopy;
  G = gamma spectroscopy;
  KPA = kinetic phosphorescence analysis;
  GCMS = gas chromatography mass spectroscopy;
  HPLC = high pressure liquid chromatography;
  GCEC = gas chromatography electron capture;
- REQUEST NUMBER internal numerical catalogue of the requested analytical suites for a sample or group of samples;
- PREP BATCH the same as the request number for samples collected in 1995;
- REPORT NUMBER internal numerical reporting mechanism by which the results for a sample or group of samples are catalogued. Provides a reference if the hard copy data package needs to be examined.

*For samples collected and analyzed in 1995, a different sample ID code was utilized. This sample code, 0215-95-XXXX, indicates the field unit (02), the TA (15), the year sampled (95), and the sample number (XXXX). The data printouts for this data also has the letters "LB" in the sample ID column, which stands for laboratory blanks and presents the results of the method blank analysis, the laboratory control sample analysis (also called blank spikes), and the laboratory control sample duplicate analysis. The HE analysis also has "LB" for 1,2-dinitrobenzene which refers to a surrogate spike analysis.

ATTACHMENT 1

Site Screening of Soils for Beryllium Using LIBS

Method:

In the LIBS (laser-induced breakdown spectroscopy) method, powerful laser pulses are focused on the surface of a material (e.g. soil) to form a series of laser plasmas. Because of the high temperature of the laser plasma a small amount of the material is atomized and their resulting atoms are excited to emit light. The light is collected and spectrally analyzed to determine the elemental composition of the material. If the method is carried out under controlled conditions and calibrated, quantitative analysis is possible.

In the instrument used for the determination of beryllium contamination in soils, about 4 grams of soil were placed in a small aluminum dish (about 35 mm in diameter, 5 mm deep) and then placed into the LIBS instrument. During analysis the dish was rotated and a series of laser spark plasmas (25 per analysis) were formed along the surface of the soil sample. A typical analysis required about one minute. During this time the light from the plasmas was collected and analyzed an average beryllium emission signal computed. At the end of the analysis, the average beryllium signal was used along with a calibration curve to determine the beryllium concentration in the soil. The calibration curve was a linear plot of beryllium signal versus beryllium concentration.

The analytical capabilities of LIBS for beryllium in soil are typically as follows:

- detection limit of 2 ppm (w/w)
- precision: +/- 20%
- accuracy: +/- 20%

Development of the calibration standards:

The samples used for calibration were Los Alamos soil, collected locally, contaminated with a commercial AAS (atomic absorption standard) solution. The soil was uniformly contaminated with solutions of varying concentrations to generate a series of calibration samples having a range of beryllium concentrations. This series of calibration samples were then introduced into the LIBS instrument and analyzed as described above for a typical soil sample. At the end of a calibration run, the results of beryllium signal versus beryllium concentration were plotted to produce a calibration curve. For the work reported here beryllium samples having beryllium concentrations of 5, 10, 25, and 50 ppm (w/w) were prepared and analyzed to generate the calibration curve. The quality of the calibration samples was determined by sending selected calibration samples off to an analytical laboratory at LANL to determine the actual analyte mass in the prepared calibration samples. The results show that the actual masses were within +/-15% of the predicted analyte mass.

The instrument was calibrated at the start of every day's analysis run. A standard sample containing beryllium in soil at a concentration of 25 ppm (w/w) was run every 20 analyses to detect drift in the instrument. If a drift was noticed such that the predicted value of the standard beryllium samples was off by more than +/-20% a new calibration curve was prepared.

APPROVED

METALS IN SOIL (FIELD SCREENING)—ENERGY-DISPERSIVE X-RAY FLUORESCENCE SPECTROMETRY (EDXRF)

Analtyes: Metals (K, Ca, Ti, Cr, Mn, Fe, Ni, Cu, Zn, As, Se, Cd, Sb, Ba, Hg, Pb, U, Th)	**Method No.:** EI732
Matrix: Soil or geological samples	**Accuracy and Precision:** For >1000 ppm, Accuracy = 93-109%, precision (1-sigma) = 2-13% . For 20-1000 ppm, Accuracy = 70-109%, precision (1-sigma) = 8-35%.
Procedure: Energy-dispersive x-ray fluorescence spectrometry	**Minimum Detectable Concentration:** ~10 ppm
Effective Date: 09/01/93	**Author:** Steve Goldstein

SAFETY NOTE: Before beginning this procedure, read SOP-17 of the EM-9 Safety Manual, Operation of an Energy-Dispersive X-Ray Fluorescence Spectrometer. Read Sec. 4.3 of the EM-9 Safety Manual for information on personal protective clothing and equipment. Read Sec. 12 of this procedure and Source Material 13.5 for proper waste disposal practices.

1. Principle of Method

1.1. Soil samples are dried, powdered, and sieved.

1.2. Samples are analyzed for trace metals by energy-dispersive X-ray fluorescence spectrometry (EDXRF).

2. Sensitivity

2.1. Sensitivity is determined by the counter background, excitation, and detection efficiency.

2.2. For routine measurements with a 200-s live time for each excitation condition, the minimum detection limit (signal above 3 σ of the background) is approximately 10 ppm.

3. Accuracy and Precision

3.1. Concentration range, average accuracy, and replicate precision (1 σ) for four soil standards is summarized below:

APPROVED

K (1-5%)	=	93	±	2%
Ca (1-20%)	=	109	±	13%
Ti (0.1-1%)	=	98	±	3%
Cr (10-200 ppm)	=	83	±	8%
Mn (200-1000 ppm)	=	109	±	16%
Fe (1-10%)	=	105	±	3%
Cu (10-100 ppm)	=	93	±	28%
Zn (10-200 ppm)	=	70	±	35%
Ba (100-1000 ppm)	=	99	±	8%
Pb (10-100 ppm)	=	95	±	16%

4. Interferences

4.1. Spectral overlaps are automatically corrected by the data analysis program. Small amounts of As in the presence of large amounts of Pb, however, appear to be difficult to resolve.

5. Collection and Storage of Samples

5.1. Soil samples are collected in polybottles. A 10 g sample is required for analysis. There are no special storage requirements.

6. Apparatus

6.1. XRF Spectrometer: Spectrace 6000 EDXRF spectrometer, equipped with x-ray tube excitation, electrically cooled SiLi detector, and IBM-compatible 386 computer for system operation, spectral processing, analysis, and storage.

6.2. Microwave: Sears Kenmore Micro\Convection Oven, #89561.

6.3. Mixer/Mill: Spex 8000 Mixer Mill.

6.4. Grinding Vials: Spex #8005 Zirconia Ceramic Vial Set.

6.5. Sieves: 100- and 10-mesh. Nylon screen with plastic frame, 70-mm-diameter. Spex #3536.

6.6. XRF Sample Cups: Disposable, polyethylene, 31-mm-diam., Chemplex #1430.

6.7. X-Ray Film: prolene, 0.00016" gauge, Chemplex #416.

6.8. Petri dish: pyrex, 94-mm-diam.

6.9. Weighing paper: VWR #12578-165.

APPROVED

7. Reagents

7.1. No reagents are required.

8. Calibration and Standards

8.1. Calibration of the EDXRF spectrometer.

8.1.1. Energy calibration of the spectrometer is performed daily using the copper K-alpha line. Stability and resolution are checked on a monthly basis, with the following specifications for copper:

FWHM: <220 ev ± 5 ev max
Peak centroid: 8041 ± 3 ev max
Total counts: 2 million or more ± 0.5% max
Peak counts: 1 million or more ± 0.5% max
Elapsed time: 8 h

8.2. Pure-element standards.

8.2.1. Reference spectra are acquired for each analyte as well as major or minor components which have interfering X-ray lines. Pure element metals or compounds are used to acquire these spectra.

8.3. Soil standards.

8.3.1. Peak intensities are converted to concentrations using a fundamental parameters analysis method, with 5 soil standards used to determine pure element count rates. Standards and samples are analyzed under identical conditions.

8.3.2. The following standards are used for calibration: NIST 2704, NIST 1648, NIST 1646, CCRM SY-2, and CCRM BL-4.

8.3.3. For QC purposes, at least one standard per 10 samples should be analyzed as an unknown.

8.4. Open and blind QC standards.

8.4.1. One each of open and blind QC soil or geological standards should be analyzed per 10 samples. One uncontaminated background sample should also be analyzed per 10 samples.

APPROVED

9. Procedure

9.1. Sample preparation.

9.1.1. Shake the sample container and transfer approximately 20 g of sample into a petri dish.

9.1.2. Microwave on 50% power for 5 min, or until dry.

9.1.3. Pass the sample through a <10 mesh screen to remove large objects, and pass <10 mesh sample through a 100 mesh screen. Discard the >10 mesh fraction.

9.1.4. Transfer the >100 mesh fraction to a zirconia vial. Mill/mix the sample for 5 min.

9.1.5. Pass the milled sample through a 100 mesh screen.

9.1.6. Transfer the <100 mesh sample to an XRF sample cup. Fill the sample cup to the top with sample.

9.1.7. Cover the sample cup with prolene film, and label with the request and sample number.

9.1.8. Between samples, clean the equipment with a dry kimwipe. At the end of preparation, rinse the equipment with water.

9.2. Sample analyses.

9.2.1. Samples are analyzed under the following conditions:

Low Z (K-Fe lines):
- 0.127-mm Al filter
- tube voltage = 13 kV
- tube current = 0.35 mA
- livetime = 200 s.

Mid Z (Ni-Se K lines, Hg-U L lines):
- 0.127-mm Al + 0.127-mm Rh filter
- tube voltage = 30 kV
- tube current = 0.30 mA
- livetime = 200 s.

High Z (Cd-Ba K lines):
- 0.127-mm Al + 0.63-mm Cu filter
- tube voltage = 50 kV

- tube current = 0.35 mA
- livetime = 200 s.

9.2.2. Open and blind QC's, standards, and duplicate samples are analyzed at a frequency of 10%.

10. Operation of the X-Ray Fluorescence Spectrometer

10.1. Refer to the operating manual for the XRF spectrometer.

11. Calculations

11.1. Total peak and background counts are determined for each analyte. Net counts are converted to concentration by use of a fundamental parameters (FP) program, using 5 standards to determine pure element count rates for each analyte. The FP program corrects for any matrix enhancement or absorption effects.

11.2. Calculations are made using the following formulas.

11.2.1. Detection limit.

$$C_{LLD} = \frac{3 \times C_{Std} \times \sqrt{N_b}}{N_n} ,$$

where C_{LLd} = detection limit,
C_{Std} = concentration of analyte in the standard,
N_b = total background counts, and
N_n = net peak counts.

For a 200 s livetime, typical detection limits are approximately 10 ppm.

11.2.2. Precision due to counting statistics.

$$\%RSD = \frac{\sqrt{N_g + N_b}}{N_g - N_b} \times 100\% ,$$

where %RSD = percent relative standard deviation,
N_g = gross counts, and
N_b = background counts.

The precision calculation is due to counting statistics only and is only one source of variance in the measurement. Other contributors to variance include instrumental precision, sample preparation, and sampling. Analysis of replicates is a more reliable but tedious way to determine overall precision.

12. Proper Waste Disposal Practices

12.1. Soil samples are returned to the Sample Management Section for disposal.

13. Source Materials

13.1. W. Watson, J.P. Walsh, and B. Glynn, "On-Site X-Ray Fluorescence Spectrometry Mapping of Metal Contaminants in Soils at Superfund Sites," *American Laboratory*, July 1989. (1989).

13.2. D. E. Leyden, "Energy-Dispersive X-Ray Spectrometry," *Spectroscopy* 2, 28-36, (1987).

13.3. A. R. Harding, "Fundamental Parameter Method EDXRF Analysis of Contaminated Soils," *Spectrace Technical Review*.

13.4. Spectrace 6000 Operators, Technical, and Software Manuals.

13.5. "Hazardous and Mixed Waste," Administrative Requirement 10-3, in *Environment, Safety, and Health Manual*, Los Alamos National Laboratory, Chapter 1 (most recent edition).

13.6. "Handling and Disposal of Hazardous Materials," SOP3, in *Environmental Chemistry Group: Environment, Safety, and Health Manual*, Appendix III (most recent edition).

13.7. "Operation of an Energy-Dispersive X-Ray Fluorescence Spectrometer," SOP17, in *Environmental Chemistry Group: Environment, Safety, and Health Manual*, Appendix III (most recent edition).

EM-9 ANALYTICAL PROCEDURE REVIEW AND APPROVAL

Method: Metals in Soil (Field Screening)—Energy-Dispersive X-Ray Fluorescence Spectrometry (EDXRF)

Method No.: EI732 **Revision No.:** 0

Section Leader	C. D. P.	**Date:**	9/30/93
Group Leader	C. D. P.	**Date:**	9/30/93
QA Concurrence	Margaret A. Gautier	**Date:**	9-30-93

Mobile Radiological Analysis Laboratory (MRAL) General Information

Primary Contacts: George Brooks, CST-9, (505) 665-2583 (Cellular, 699-1652)
Don Dale, CST-9, (505) 665-3917 (Cellular, 699-1925)
Bret Lockhart, CST-9, (505) 665-3917 (Cellular, 699-1655)
Chris McConaha, CST-9, (505) 665-3917 (Cellular, 699-1925)

Vehicle Description: The MRAL is a specially modified, self-contained mobile radiological analysis laboratory designed to support the following operations: 1) Provide the customer with radiological field screening capabilities, 2) Assurance that the contract laboratories do not exceed their radiological building limits with possible "hot" samples, 3) Minimize analytical costs by providing fieldable/defensible radioanalytical capabilities, and 4) Assuring that DOT shipping regulations for N.O.S. radioactive material is not exceeded.

Analytical Capabilities:

1) Gross Alpha/Beta Analysis via gas flow proportional counting (Protean Instrument Company)

MDA's	Soils - (0.2 g, 5 min.)	Alpha - 180-220 pCi/g Beta - 75-95 pCi/g
	Waters - (5 ml, 5 min.)	Alpha - 4-8 pCi/ml Beta - 13-20 pCi/ml
	Filters & Swipes (1 fil, 5 min.)	Alpha - 3-8 pCi/(Fil or Swipe) Beta - 7-12 pCi/(Fil or Swipe)

2) Gross Alpha/Beta via Liquid Scintillation Analysis (Packard),

MDA's	Soils - (0.2 g, 5 min.)	Alpha - 4-10 pCi/g Beta - 4-10 pCi/g

3) Gross Gamma Analysis via Bicron 5" x 7" NaI(Tl) Well Counter,

MDA's	Soils - (100 g., 5 min.)	4 - 6 pCi/g

	Waters - (500 ml, 5 min.)	1-2 pCi/ml
	Filters/Swipes - (1 fil/swi, 5 min.)	220-250 pCi/Fil-Swi

4) Tritium Analysis with a Packard TR2550 TRAB LSC Counting System,

MDA's	Soils - (15 g, 5 min.)	1-3 pCi/g
	Waters - (5 ml, 5 min.)	3-5 pCi/ml
	Filters/Swipes - (1 fil/swi, 5 min.)	4-6 pCi/Fil

5) Gamma Isotopic Analysis for Silicates with HPGe and Portable Gamma Spectroscopy System,

MDA's	Soils - (100 g, 8.33 min.)	Gamma Emitters: Isotopic Specific (Typically, 2-10 pCi/g)
	Waters - (500 ml, 8.33 min.)	Gamma Emitters: Isotopic Specific (Typically, 100-3000 pCi/L)
	Filters/Swipes - (1 Fil/Swi, 8.33 min.)	Gamma Emitters: Isotopic Specific (Typically, 1-7 pCi/Fil-Swi)

6) Soil Moisture analyzer capable of data comparable to ASTM Technique 2216-92 (Standard Test Method for Laboratory Determination of Water (Moisture) Content of Soil and Rock) within 20-30 minute analysis time.

NOTE * All above mentioned MDA's are based on standard count times for each listed method; these detection limits can be enhanced by lengthening the count time to meet the specific customer needs ("MDA's vs. Count time" data for a variety of count times exists and is available upon request). The customer must realize that with the increase in the count time, the sample throughput will drop accordingly. The MRAL will provide whatever analytical requirements are needed by the customer, as long as the ramifications of the changes requested are understood.

Costs : Our current costs are based of either of two (2) customer based pathways for analytical

costs. The first scenario is based on the customer having extensive knowledge of the total number of samples that will be analyzed, the types of analysis requested, the time frame in which the samples must be processes, along with many other analytical protocols that will be known. Typically, this means of costing is cheaper because all of the information to process the samples is known, and as such, the resources can be managed to meet these radioanalytical needs. The second method of costing is based on previously utlized program of "Walk-In Forms". This method allows the customer to submit samples at any time interval, with little previous knowledge of what is required; ie, turn around time, required MDA's, etc. This scenario is usually more expensive due to the relative short time frame to process the samples, outside of CST-9's normal sample process flow.

A more extensive discussion of these processes can be found within the financial section of the Mobile Radiological Analysis Laboratory (MRAL) handbook, dated September, 1996.

Sample Throughput: Sample throughput varies with the analytical request of the field teams. If only gross alpha/beta/gamma is requested, 35-40 samples per day can be realized. If tritium, percent soil moisture, and gamma spectroscopy are requested, throughput drops to approximately 25-30 samples per analysis day. This again is based on the standard 5 minute count time; if extended count times are required, sample throughput will drop accordingly.

As has been discussed with several customers, in order to meet the analytical needs in a timely and cost effective fashion, the MRAL personnel will strictly adhere to the number of samples that will and can be accepted within the lab on a daily basis. The "***Right of Refusal***" will be strictly enforced when the number of samples delivered exceed the capacity of the mobile laboratory for that particular day. If you have any questions or concerns with the implementation of this policy, please contact George Brooks at either of the numbers listed above.

System Setup: The van requires two people approximately 1 day to setup the mechanical and electrical systems that support the equipment within the van. The nuclear instrumentation systems are calibrated against NIST standards while a series of quality control samples are analyzed before the standard sample analysis process begins. The van can be supported for a short time on its' own power source (ie. generator set). For longer term setup, an adequate external power source (either 208V, single phase, 60A service, or 208V, triple phase, 100A, depending upon the MRAL used) is requested. Other specific site features that must also be incorporated into the initial site plan include a level area for van placement, and adequate security to protect the MRAL and ancillary equipment from vandalism.

Because of the time and effort involved with the proper setup of the MRAL, the van cannot be moved on a daily basis. The van will stay at a particular site for a minimum c 2 weeks before the siting location is changed.

The MRAL was designed to support field operations involved with site remediation programs under the Environmental Restoration program. In order to make the MRAL's work as effectively as possible, the field task leaders need to schedule with the CST-9 staff and define the specific needs requirements of the MRAL(s) as soon as definite sampling protocols are arranged. The CST-9 personnel can then work with the ER Programs' field coordinator to determine how best to support their field work.

Future Additions: Future analytical capabilities include the development of a procedure for the quantitative analysis of alpha emitters within silicates, waters, and filters/swipes. This method is based on the utilization of microwave digestion technology (or suitable alternates), incorporated with new organic ligands, and the Gridded Ionization chamber. Other methodologies will also be examined for possible integration into the field radiological analysis support function of the MRAL(s) as they become available.

Comments: As with any mobile laboratory setting, certain limitations exist based on the design criteria with which the lab was designed. The following discuss some of the more common limitations:

1) The use of portable power versus dock power.

Portable power is adequate for a short time periods, but should not be as the standard field protocol. Down times are required for the scheduled maintenance of such power systems. When the power is shut down, systems requiring constant power (ie., the cryogenic cooler for gamma spectroscopy and liquid scintillation analysis) are affected. Once power is brought back up, the systems need to be cooled down and re-calibrated. With gamma spectroscopy, this will require at least 24 hours of continuous run time before sample analysis can resume. Another factor associated with the use of portable power is the cost of diesel to run for any extended length of time. This cost, versus the dollars spent for hard-wired electrical setup must be examined;

2) Secondary problems associated with portable power systems.

The portable generator produces noise levels and exhaust that can impact operations when in the vicinity of community neighborhoods. The noise also brings attention to the mobile labs when the operation prefers anonymity;

3) Proper assessment of the quality of the data.

This is especially important when examining the data from the "gross" analytical procedures. The final user(s) must understand that the large uncertainties associated with gross screening procedure are typical of the quality of data affixed with these quick field techniques. These methods are designed to give the customer an idea of whether or not contamination exists within the sample, not a +/- 5% number. The other procedures (gamma spectroscopy, tritium, and percent soil moisture) can be utilized in a fashion consistent with fixed based data, and

4) Mobile lab design.

The original design of the mobile labs was to support screening operations associated with areas of low level radioactive contamination. Within the past year, several sites have encountered high levels of activity within the sampling grids. Since the MRAL's were not designed to work with these levels of samples, the samples must go back to the customer for sample disposition. Until financial support is secured to enhance our analytical capability within this area, this will still be a problem for the field teams.

Any questions concerning the above information should be directed to the primary contacts as listed above.

MRAL Instrumentation Information.

The following pages list the instrumentation currently available within the Mobile Radiological Analysis Laboratory (MRAL) to support field radioanalytical work. All systems are commercially available and have been configured to operate within the mobile environment.

1) Gross Gamma Counting System. A cabinet, lined with a Pb/Cd/Cu graded shield to minimize ambient background levels, houses a 5" x 7" BICRON NaI(Tl) well counter. This system provides the first level of screening capability for probable gamma emitters within the sample matrix.

2) Electronics Rack. This assembly houses the high voltage supply, timer/counter, amplifier, single channel analyzer (SCA), thermal printer, NIM power supply, multichannel analyzer (MCA), cryogenic controller unit, and ambient temperature monitoring system. All of these components support the gross gamma system.

3) Cryogenic Cooling System. The cryogenic cooling unit supports the Hyperpure Germanium (HPGe) detector mechanical assembly. The unit resides within a cabinet that is specially modified with adequate electrical and cooling needs to support the normal system operations. The type of system is used in place of conventional liquid Nitrogen (LN) cooling of the gamma spectroscopy system.

4) Hyperpure Germanium (HPGe) Detector. The detectors housed within the various MRAL's range from 50-75% relative efficiency N-Type HPGe's that support high resolution gamma spectroscopy applications within the MRAL. These systems are currently calibrated for soils, waters, filters and swipes. Pending advance notice of the matrix type expected from the customer, most any matrix can be calibrated and analyzed for.

5) NOMAD System. The hardware was developed by EG&G ORTEC for portable gamma spectroscopy applications. The zero haliburton case houses all the necessary electronics that drive the HPGe, including the laptop computer. This computer not only provides software control of all of the HPGe functions, but also can support both qualitative and quantitative sample analysis.

6) 486-66 Computing System. All of instrumental information, data reduction, and data reporting functions are processed within this machine. Menu capabilities are provided for the user to choose from, including the creation of data files that can be loaded onto a diskette and transported back to the laboratory where the information can be uploaded into a customer database via an FTP protocol.

7) Liquid Scintillation Analyzer. This system (PACKARD 2550 TR/AB) provides liquid scintillation analytical capabilities. The system, in it's current configuration, is calibrated for tritium (H^3) analysis in soils, waters, filters and swipes. The system can also be configured to process samples for gross alpha and beta types of analysis. A procedure is currently within the developmental stages, and should be release soon.

8) Sample Hood. This hood provides space for sample preparation, while providing the user with some personal protection from possible exposure to a variety of radiological/organic compounds that might found within the sample matrix.

9) Gross Alpha/Beta Instrument. A gas-flow proportional counting system developed by the Protean Instrument Company (IPC-9025) is utilized to analyze samples for gross alpha and gross beta content. The system is automated, and can be configured to run in a windowless mode for greater sensitivity to low energy alpha emitters.

10) Percent Soil Moisture Analyzer. This instrument, from the Denver Instrument Company, provides data comparable to the ASTM Method Desig. D 2216-92, in a fraction of the time as compared to the ASTM technique. With the % soil moisture value, the H^3 data can be corrected back to the actual soil conditions, and a "true" tritium activity levels calculated.

11) Uninterrupted Power Supplies (UPS) and 5 kW Power Conditioners. Two UPS units per MRAL provide continuous, uninterrupted, clean power for all the radioanalytcial counting systems. This capability allows us to provide an orderly shutdown in the event of catastrophic failure of either the generator or dock power. This minimizes samples lost in analysis from electrical system failures. The 5 kW power conditioners are specifically for the Cryogenic cooling systems. The addition of this power conditioner minimizes any signal noise that might be carried through to the HPGe, thereby increasing the signal to noise ratio; providing better data.

12) Heating Systems. Two types of heating systems are available within the MRALs. A standard electrical powered heating system is used when the counting lab is tied to either a generator, or dock power. A propane based system is used when the unit is away from all power supplies. This maintains adequate temperatures within the MRAL, minimizing damage from temperature extremes.

The costs associated with the development of radioanalytical systems for an MRAL are listed below:

Costs:

1) Trailer outfitted with cabinets, hood, heating and cooling, and all electromechanical service

provided - $100K

2) Portable generator - $25K

3) Automated Gross Alpha/Beta counting system - $40K

4) Gross Gamma Counting system - $30K

5) High Purity Germanium (HPGe) with cryogenic cooling system and NOMAD portable spectroscopy counting system - $160K

6) Liquid Scintillation counting system - $55K

7) Soil Moisture Analyzer - $15K

8) Associated electronics (computer and monitor, printer, portable copier, NIM modules for instrument support, etc) to support the operations of the lab - $30K

9) Miscellaneous equipment (centrifuge, multichannel analyzer, electronic balance, other misc. equipment) - $35K

<u>Total Cost - $490K</u>

(Additional costs are incurred from FTE support (both TEC and TSM) for the installation, setup, and calibration of the above systems)

APPROVED

GROSS ALPHA/BETA SCREENING OF SOILS, WATERS, FILTERS AND SWIPES WITHIN A MOBILE RADIOLOGICAL ANALYSIS LABORATORY

Analyte: Alpha- and beta-emitting nuclides	**Method No.:** MLR100
Matrix: Silicates, water, filters, and swipes	**Minimum Detectable Activity:** Matrix and time specific.
Procedure: Gas flow proportional counting	**Accuracy and Precision:** Matrix and time specific.
Effective Date: 05/28/92	**Author:** George Brooks Don Dale

SAFETY NOTE: Before beginning this procedure, read all of the material safety data sheets for the chemicals listed in Sec. 7. Read Sec. 4.3 of the Environmental Chemistry Safety Manual for information on personal protective clothing and equipment. Read Sec. 12 of this procedure and Source Material 13.5 and 13.6 for proper waste disposal practices.

1. Principle of Method

1.1. Samples are dried and mounted directly on stainless steep planchets.

1.2. Samples are counted for 5 min on a low-background, gas-flow proportional counting system.

1.3. The sample size for silicates is 0.2 grams.

1.4. The samples size for waters is 1.0 mL.

1.5. The sample size for filters or swipes is per filter or per swipe.

2. Sensitivity

2.1. The sensitivity will vary greatly for alpha activity and to a lesser degree for beta activity. The variance associated with the alpha activity is more pronounced than that found with conventional wet chemistry techniques. For silicates, this is largely due to the problems of variant self-absorption and non-homogeneity within the sample itself.

2.2. Silicates.

2.2.1. The minimum detectable limit for alpha is 73.0 pCi/g and for beta 36.0 pCi/g, based on a 0.2 g sample and a 5-min count.

2.3. Waters.

2.3.1. The minimum detectable activity for alpha is 4.0 pCi/mL and for beta 14.0 pCi/mL, based on a 1.0 mL sample and 5-min. count.

2.4. Filters/Swipes.

2.4.1. The minimum detectable activity for alpha is 3.0 pCi/filter or swipe and for beta 7.0 pCi/filter or swipe. This is based upon a 5-min. count time.

3. Accuracy and Precision

3.1. In a gas flow proportional counter, the efficiency and crosstalk between the alpha and beta counts may vary greatly, depending upon both the energy of the alpha or beta emitter, the method in which the samples was prepared and counted, and the matrix being analyzed. ^{239}Pu and a $^{90}Sr/^{90}Y$ standard addition matrix sources are used for the determination of all crosstalk and relative efficiency examinations. The accuracies of a given measurement will depend on the actual energies of the unknown nuclides.

3.2. The following includes a summary of the performance of both open and system quality assurance materials (QC's) that provide an estimate of the accuracy and precision associated with this technique. The vast majority of samples (>98%) analyzed are silicates, so a significant amount of information exists concerning the performance of soils in this procedure. The number associated with the waters are based on early calibration studies using standard addition materials. There is no information concerning the accuracy and precision for any filter or swipe materials. All solutions used in the making of either standard types are traceable to NIST.

Silicates:
Alpha = 0.60 ± 0.46% (N = 110)
Beta = 0.86 ± 0.38% (N = 110)

Waters:
Alpha = 94.0 ± 16.0% (N = 15)
Beta = 111.0 ± 14.0% (N = 9)

4. Interferences

4.1. The crosstalk correction method may not adequately protect from incorrect identification of radiation from samples containing very low-energy alpha or high-energy beta activities.

4.2. Moderate to high levels of gamma radiation can be misinterpreted as alpha/beta counts by the gas-flow proportional counter.

4.3. Because of self-absorption within the sample (especially direct counted silicates), the assumption that ***the activity is evenly dispersed within the sample matrix, and that the counting process is adequately measuring the average activity within the sample is taken.*** In nonhomogenous samples with low levels of alpha activity, the sample activity may be underestimated.

4.4. The addition of a thin Mylar sheet covering the planchet, which minimizes the possibility of cross-contamination within the instrument, increases self-absorption in samples containing low-energy alpha and beta activities. This may result in an under estimation of the sample activity.

5. Collection and Storage of Samples

5.1. There are no special collection and storage requirements.

6. Apparatus

6.1. Low-level alpha/beta planchet counting instrument, Protean Instrument Corporation Model IPC 9025, run in a windowless mode. The system also integrates a 50-sample automatic sample changer within its mechanical structure.

6.2. P-10 (argon/methane) gas cylinder, size D tank.

6.3. Planchets: stainless steel, 2.0- × 0.25-in., Model No. 129-021, Atomic Products Corp., Shirley, New York.

6.4. Mylar sheet: 0.00025 in. thick.

6.5. Glue stick adhesive: Scotch brand, catalog no. 6094.

6.6. Plastic weight boats: 2- × 2-in. and 4- × 4-in.

6.7. Infrared heating lamps: dual lamp assembly, Fisher.

6.8. Plastic jig holder and ring for attachment of Mylar surface film to the sample planchet.

7. Reagents

7.1. No reagents are used in this technique.

8. Calibration and Standards

8.1. Determine the ionization plateau for both alpha and beta energies. This process should be completed during the initial system setup, or when the P-10 gas cylinder is changed. This step is critical for the proper and accurate operation of the instrument.

8.1.1. Use the plated sources (from Isotope Products Laboratory, Model LB-Pu-239 and LB-Sr-90) that are kept with the instrument. The alpha source is a plated ^{239}Pu stainless steel 1.75" diameter plate, while the beta source is a 1.75" diameter ^{90}Sr/^{90}Y plated source.

8.1.2. Place the alpha source in the samples holder. Start the calibration routine by depressing the **CAL** button on the console.

8.1.2.1. This will access the submenus under this function, Calibration Selection Determination. Use the arrow keys to mark the **DETECTOR VOLTAGE DETERMINATION** function.

8.1.2.2. Depress the **ENTER** key to start the process. Pick the **ACQUIRE PLATEAU DATA** function. This process is automatic, and will step the counter through a series of voltages (30-V increments from 500 to 1800 V). A printout will be generated that shows the counts versus the voltage applied, along with a value of percent counts per voltage step. A good rule of thumb for plateau determination is setting the voltage set point at 10% beyond the knee of the ionization plateau; the manufacturer suggests setting this point at the knee. The percent counts per voltage step provides the user with additional information for accurate determination of the ionization plateau. For more information, refer to the IPC instrument manual.

8.1.3. Using the beta source, repeat the above process for the beta plateau determination.

8.2. Generate detector efficiencies for the determination of alpha and beta activities in the silicate sample using standard addition of a NIST traceable ^{239}Pu and ^{90}Sr that is in equilibrium with it's ^{90}Y component. These solutions are used specifically because they replicate the isotopes of interest that may be found in the field.

8.2.1. Prepare a series of standards (triplicate sets of 3 activity levels, 100, 500, and 1000 dis/min on the 0.2 g soil matrix blanks) that will give a wide range of activity levels for both the alpha and beta components.

8.2.2. Place the samples within the instrument and analyze under the "STD COUNT" program. This will generate data that is transferred into an EXCEL spreadsheet, where the information is reduced to provide an efficiency for both the alpha and beta component, along with cross-talk values. The efficiencies are determined for each component by dividing the count rate (counts/min) by the known activity added to each standard. Examine the data sets for nonlinearity between the different levels. The generated efficiency values should not be significantly different between the sets. A printout will be generated for each matrix form each MRAL.

8.2.3. Enter these values into the instrument's calibration file. The menu will ask for the efficiency and crosstalk factors, along with the associated error for these data points. Most gross alpha/beta systems use mass-precipitation curves to derive the efficiency values; this type of analysis is different. Because the mass of the sample remains constant, only one efficiency point is needed due to the standardization and normalization of the standards to samples size. This information will be present on the hard copy output from the standard runs.

8.3. Determine and track the instrument performance assessment parameters using a ^{239}Pu and a $^{90}Sr/^{90}Y$ point source, a soil blank, and a blank planchet.

8.3.1. Load the samples into the sample holder tubes in the order described in Step 8.3.

8.3.2. Start the calibration by depressing the **CAL** button on the instrument panel.

8.3.2.1. This will bring up the submenu **CONTROL CHART ROUTINES**. Initiate this submenu to bring up the choices: Sr-90 STANDARD, SOIL BLANK 1, SOIL BLANK 2, AUTO SEQUENCE ALL. Pick the **AUTO SEQUENCE ALL** function. This will run all the samples for instrument performance assessment routine.

8.3.3. After counting is completed, the system will flag the user if the sample parameters are outside the pre-determined bounds. If other messages appear, notify the MRAL manager. The system should also provide a hard copy of the latest sample counts and a chart displaying the trend in the data.

8.3.4. For more information concerning any of the above procedures, consult the Protean IPC Instrument Manual, Section 7.

8.4. Determine and track the proper Single Channel Analyzer (SCA) setting of the Sr-90/Y-90 point source.

8.4.1. Place the $^{90}Sr/^{90}Y$ source on a planchet, pick any of analysis protocols, and initiate a count time of approximately 600 seconds. It is also required that significantly long purge time (>120 seconds) be utilized during this procedure to ensure that and adequate gas density is provided for the ionization process. When the SCA is set correctly, there should be approximately 3-4 alpha counts per 10,000 beta events. Should the observed counts vary significantly from these prescribed parameters, notify the MRAL Manager.

9. Procedure

9.1 Silicates.

9.1.1. Obtain the sample aliquot from the cooler holding the samples. Insure that the sample number coincides with that noted on the Chain-of-Custody (COC) form. Note the condition of the sample on the COC, including whether or not there was adequate sample in which to perform the analysis. Examine the COC to determine if the customer is requiring any special counting conditions for the samples.

9.1.2. Remove approximately 1.0 g of soil from the sample bag and place in a 4- × 4-in. plastic weigh boat.

9.1.3. Place the sample (in the weigh boat) under a heat lamp to remove any excess moisture that may remain. Dry until the soil is friable.

9.1.4 If the sample consists of large chunks of soil, aggregate, and miscellaneous "junk", remove the obvious. Pulverize the remainder until the soil particles are of uniform size.

9.1.5. Write the sample number on the bottom of the planchet.

9.1.6. Rub a light film of glue adhesive on the inside of the planchet for the soil to adhere to.

9.1.7. Weigh 0.20 g (±0.01g) of soil in the small (2- × 2-in.) weigh boat.

9.1.8. Transfer the 0.20 g of soil to the prepared planchet. Spread the soil around within the planchet to disperse it evenly in the sample container.

9.1.9. Let the adhesive dry for approximately 0.5 min before covering the sample.

9.1.10. Obtain a 3.0-in. circle of 0.00025-in. Mylar to adhere to the top of the sample planchet.

9.1.11. Place the prepared planchet on the plastic sample holder jig. Center the mylar circle on the sample planchet. There should be some adhesive remaining on the rim of the planchet for the Mylar to attach to. If not, apply some glue stick around the rim.

9.1.12. Move the plastic centering tool down over the planchet to affix the sides of the mylar sheet to the planchet. This should provide adequate adhesion of the mylar to the planchet. The sample is now ready to count.

9.2. Waters.

9.2.1. Obtain the sample aliquot from the cooler holding the samples. Insure that the sample number coincides with that noted on the COC form. Note the condition of the samples on the COC, including whether or not there was adequate sample in which to perform the analysis. Examine the COC to determine if the customer is requiring any special counting conditions for the samples.

9.2.2. Write the sample number on the bottom of the planchet.

9.2.3. Pipet 1.0 mL of the water sample into the prepared planchet.

9.2.4. Place the planchet under the heat lamp and dry the sample to completeness. These types of samples are not covered due to the limited possibility of resuspension of the sample within the counting system. The sample is not ready to count.

9.3. Filters and swipes.

9.3.1. Obtain the sample aliquot from the cooler holding the samples. Insure that the sample number coincides with that noted on the COC form. Note the condition of the samples on the COC, including whether or not there was adequate sample in which to perform the analysis. Examine the COC to determine if the customer is requiring any special counting conditions for the samples.

9.3.2. Write the sample number on the bottom of the planchet.

9.3.3. Coat the bottom of the planchet with a thin film of glue for the sample to adhere to. Place the filter or swipe in the bottom of the planchet and dry the sample to remove excess moisture.

10. Operation of the Instrument

10.1. Loading the proportional counter.

10.1.1. Load the samples in the sample holder assembly, using the sample loading tool provided by Protean. Place the sample tube on this loading tool and then place the sample holder assemblies in the tube. After all the samples have been loaded, carefully lift the sample holding tube off the loading tool.

10.1.2. Load the holding tube on the tube receiver closest to the operator. When loading the tube within this assembly, be careful not to jar the holding tube. Excess motion will cause the samples assemblies to fall out of the holding tube inside the instrument. If this occurs, the cover of the instrument will need to be taken off and the sample and holders removed and restacked in the sample tube holder.

10.2. Sample counting.

10.2.1. Sign onto the Protean instrument with the appropriate user password. This will bring up the initial software layout.

10.2.2. Depress the **COUNT** key.

10.2.2.1. This will bring up the **Acquisition Selection Menu**. Select the appropriate matrix from the menu. This selection is used for routine gross alpha/beta counting.

10.2.3. This selection will lead into the following sequence:

10.2.3.1. **Preparing Sample Changer**

10.2.3.2. **Load Magazine 1 and Press ENTER**

10.2.4. After loading the sample tube holder, depress the **ENTER** key. This will give a **Clearing Sample Buffer** message.

10.2.4.1. **Accessing Sample Number 01**

10.2.4.2. **Low Gas Flow** to **Good Gas Flow**

10.2.4.3. **Good Gas Flow, Purging Detector, Seconds Remaining XXX**

10.2.5. The system has begun to count the samples and will print out the first data after the sample count has completed.

11. Calculations

Once the samples have been counted and the data transferred to the main MRAL PC (personal computer), the appropriate information is extracted from the data files for the final activity calculations. Acceptable sample units associated with this process include per gram, per mL, or per unit (filter or swipe).

11.1 The alpha sample activity is calculated utilizing the following algorithm:

Alpha Activity:

$$A_A = \frac{(C_a - C_{ab})}{(t * e_a * x * 2.22)} ,$$

where A_A = Alpha activity of sample in pCi/x,
C_a = gross alpha sample counts,
C_{ab} = alpha background counts (instrumental or matrix derived),
t = count time (minutes),
e_a = alpha efficiency,
x = sample aliquot used for the analysis - g, mL, filter or swipe, and
2.22 = conversion factor to pCi.

11.2 The beta sample activity is calculated utilizing the following algorithm:

APPROVED

Beta Activity:

$$A_B = \frac{(C_{bc} - C_{bb})}{(t * e_b * x * 2.22)} \quad ,$$

where,

$$C_{bc} = C_b - (C_a * X_t) \quad ,$$

and A_B = beta activity of sample in pCi/x,
C_{bc} = gross beta sample counts corrected for crosstalk,
C_{bb} = beta background counts (instrumental or matrix derived),
C_b = gross beta samples counts uncorrected for crosstalk,
t = count time (minutes),
e_b = beta efficiency,
x = sample aliquot used for the analysis - g, mL, filter or swipe,
2.22 = conversion factor to pCi, and
X_t = alpha to beta crosstalk.

11.3 The alpha analytical uncertainty is calculated utilizing the following algorithm. This uncertainty is derived from the counting statistics and background errors only, and currently defaults at the 3 sigma (σ) confidence level.

Alpha Uncertainty:

$$U_A = \frac{3 * \sqrt{ABS\left(\frac{C_a}{t} + \frac{C_{ab}}{t}\right)}}{(e_a * x * 2.22)} \quad ,$$

where, U_A = Alpha uncertainty in pCi/unit,
3 = 3 sigma qualifier,
C_a = gross alpha counts,
C_{ab} = alpha background counts (instrumental or matrix derived),
t = count time (minutes),
e_a = alpha efficiency,
x = sample aliquot used for the analysis - g, mL, filter or swipe, and
2.22 = conversion factor to pCi.

11.5 The beta analytical uncertainty is calculated utilizing the following algorithm. This uncertainty is derived from the counting statistics and background errors only, and currently defaults at the 3 sigma (σ) confidence level.

Beta Uncertainty:

$$U_B = \frac{3 * \sqrt{ABS\left(\frac{C_{bc}}{t} + \frac{C_{bb}}{t}\right)}}{(e_b * x * 2.22)} ,$$

where, U_B = Beta uncertainty in pCi/unit,
3 = 3 sigma qualifier,
C_{bc} = gross beta counts corrected for crosstalk as defined within the Beta activity calculation within section 11.2 above,
C_{bb} = beta background counts (instrumental or matrix derived),
t = count time (minutes),
e_b = beta efficiency,
x = sample aliquot used for the analysis - g, mL, filter or swipe, and
2.22 = conversion factor to pCi.

11.4 Minimum detectable activity (MDA).

The minimum detectable activity is derived from the following algorithm,

$$MDA = \frac{(2.71 + 4.65 \sqrt{Z})}{(t * e_x * x * 2.22)} ,$$

where MDA = The minimum detectable activity (pCi/unit) of the samples based on a 3 sigma level of confidence,
Z = The alpha or beta (corrected) background counts. The final derived MDA will differ based upon whether the blank is instrumental or matrix derived,
t = count time (minutes),
e_x = efficiency, either alpha or beta,
x = sample aliquot used for the analysis - g, mL, filter, or swipe, and
2.22 = conversion factor to pCi.

APPROVED

12. Data Reduction, Handling, and Storage

12.1 The Protean Instrument generates a hard copy report (Fig. 2.) at the end of the counting cycle. The data from this sequence can be either entered into the data reduction program manually, or the file saved and transferred automatically for large sample sets.

12.2 The raw data generated from this analysis process is compiled with data sheets from any remaining analyses and placed within folders for future data storage.

12.3 This information is returned to the fixed based laboratories where the content of these data packages are examined, and the electronic data is transferred for storage into the users database (ie., FIMAD for the Environmental Restoration program).

12.4 Final disposition and long term storage of the these data packages are taken care of when the data packages are delivered to the users information storage facility (Field Sample Facility for the Environmental Restoration program).

12.5 For more specific details concerning the transfer within the MRAL's and the fixed base labs, please refer to procedure MLR600 for more details.

13. Proper Waste Disposal Practices

13.1. Solid waste.

13.1.1. Sample-contaminated waste.

13.1.1.1. Sample-contaminated waste includes plastic weigh boats, spatulas, used planchets, Mylar, syringes, centrifuge tubes, filter disks, glove, and the planchet containing the 0.2. g of the soil sample. The waste is accumulated in a plastic bag on a daily basis, sealed, and placed within a 1- x 2- x 2-ft cardboard box kept within the van.

13.1.1.2. The box is labeled as Radioactive waste as all waste associated with sample analysis is considered suspect radiological waste.

13.1.1.3. When the box is full, remove the plastic bag from the container and insure the bag is sealed with tape. Removed from the plastic bag from the mobile lab, and returned it to TA-59 in the basement for compaction. A new plastic bag is inserted in the box.

13.1.1.4. The waste is stored in the basement while the necessary waste removal are generated and cleared through Waste Services (CST-17).

13.1.1.5. The area waste coordinator should be notified to initiate the waste removal process. He/she will assist in completing the necessary forms.

13.1.1.6. The remaining sample should be returned to the customer in the original sample container, following chain-of-custody protocol.

13.2.1. Liquid waste.

13.2.1.1. Water samples should be treated under the same method of disposal as soil samples. Once all analysis have been completed, pour the water aliquot taken for analysis have been completed, pour the water aliquot taken for analysis back into the original sample container submitted by the customer. Return the sample to the customer following chain-of-custody procedures.

13.2.1.2. There is no creation of liquid waste through this analysis.

14. Source Materials

14.1. Instruction Manual for the IPC 9025 Low Level Alpha/Beta Counting Instrument, IPC-9025-1.1, Protean Instrument Corporation, P.O. Box 910, Oak Ridge, TN (1991).

14.2. Environmental Protection Agency, "Tentative Reference Method for the Measurement of Gross Alpha and Gross Beta Radioactivities in Environmental Waters," Quality Assurance Branch, Technical Support Laboratory, National Environmental Research Center, Las Vegas, NV, ROAP Number 22 ACW, EPA-680/4-75-005 (1975).

14.3. EML Procedures Manual, 26th ed., H. L. Volchock and G. de Planque, Eds., Environmental Measurements Laboratory, U.S. Department of Energy, New York, NY, HASL-300 (1986).

14.4. L. A. Currie, "Limits for Qualitative Detection and Quantitative Determination," *Anal. Chem.* Vol. 40 No. 3, 586-593 (1968).

APPROVED

14.5. "Low-Level Radioactive Solid Waste," Administrative Requirement 10-2, in *Environment, Safety, and Health Manual*, Los Alamos National Laboratory Manual, Chapter 1 (most recent edition).

14.6. "Chemical, Hazardous, and Mixed Waste," Administrative Requirement 10-3, in *Environment, Safety, and Health Manual*, Los Alamos National Laboratory Manual, Chapter 1 (most recent edition).

This procedure has been extensively revised and detailed changes are not redlined.

APPROVED

EM-9 Gross Alpha/Beta Sample Sheet

Date:_____ Analyst:_____

RN:_____

Pos	Samp Num	Analysis	Result	Unc.
		Alpha		
		Beta		
		Alpha		
		Beta		
		Alpha		
		Beta		
		Alpha		
		Beta		
		Alpha		
		Beta		
		Alpha		
		Beta		
		Alpha		
		Beta		

Figure 1. EM-9 Gross Alpah/Beta Sample Sheet

APPROVED

```
RADVAN:GROSS/A/B          MOBILE-RAD-VAN        B. LOCKHART   α 3124.2 ± 790.8
ID: 00000000    07-27-92    11:41:44            α QC 1-1      β LMDA
Net Wt mg:    1.00  sd:    0.00
  : 001  Repeat: 00    BG TIME (min):    5.00   SAMPLE TIME (min):    5.00
 lpha to Beta cpm:   60.05  sd:    5.28
---:- COUNTS -:--- CPM ---:-BG CPM-:- NET CPM -:- %EFF-:--- DPM ---:- LLD dpm-
 A :       561 :     112.20 :    1.00 :    111.20 : 1.60 :   6935.70 :    129.78
sd :     23.69 :       4.74 :    0.47 :      4.76 : 0.40 :   1755.64 :
 B :       215 :      43.00 :   14.60 :    -31.65 : 18.60 :   -170.15 :     42.75
sd :     14.66 :       2.93 :    2.48 :      6.53 : 2.50 :     41.91 :
```

```
RADVAN:GROSS/A/B          MOBILE-RAD-VAN        B. LOCKHART   α 123.6 ± 44.5
ID: 00000000    07-27-92    11:48:45            β std #6      β 2592.3 ± 350.3
Net Wt mg:    1.00  sd:    0.00
SN: 002  Repeat: 00    BG TIME (min):    5.00   SAMPLE TIME (min):    5.00
Alpha to Beta cpm:    2.38  sd:    0.64
---:- COUNTS -:--- CPM ---:-BG CPM-:- NET CPM -:- %EFF-:--- DPM ---:- LLD dpm-
 A :        27 :       5.40 :    1.00 :      4.40 : 1.60 :    274.43 :    129.78
sd :      5.20 :       1.04 :    0.47 :      1.14 : 0.40 :     98.76 :
 B :      5437 :    1087.40 :   14.60 :   1070.42 : 18.60 :   5754.97 :     42.75
sd :     73.74 :      14.75 :    2.48 :     14.97 : 2.50 :    777.69 :
```

```
RADVAN:GROSS/A/B          MOBILE-RAD-VAN        B. LOCKHART
ID: 00000000    07-27-92    12:12:13            1317          LMDA
Net Wt mg:    1.00  sd:    0.00
  : 001  Repeat: 00    BG TIME (min):    5.00   SAMPLE TIME (min):    5.00
 lpha to Beta cpm:    0.00  sd:    0.00
---:- COUNTS -:--- CPM ---:-BG CPM-:- NET CPM -:- %EFF-:--- DPM ---:- LLD dpm-
 A :         2 :       0.40 :    1.00 :     -0.60 : 1.60 :    -37.42 :    129.78
sd :      1.41 :       0.28 :    0.47 :      0.55 : 0.40 :     35.54 :
 B :        64 :      12.80 :   14.60 :     -1.80 : 18.60 :    -9.68 :     42.75
sd :      8.00 :       1.60 :    2.48 :      2.95 : 2.50 :     15.93 :
```

```
RADVAN:GROSS/A/B          MOBILE-RAD-VAN        B. LOCKHART
ID: 00000000    07-27-92    12:19:15            1318          LMDA
Net Wt mg:    1.00  sd:    0.00
SN: 002  Repeat: 00    BG TIME (min):    5.00   SAMPLE TIME (min):    5.00
Alpha to Beta cpm:    0.00  sd:    0.00
---:- COUNTS -:--- CPM ---:-BG CPM-:- NET CPM -:- %EFF-:--- DPM ---:- LLD dpm-
 A :         1 :       0.20 :    1.00 :     -0.80 : 1.60 :    -49.90 :    129.78
sd :      1.00 :       0.20 :    0.47 :      0.51 : 0.40 :     34.28 :
 B :        28 :       5.60 :   14.60 :     -9.00 : 18.60 :   -48.39 :     42.75
sd :      5.29 :       1.06 :    2.48 :      2.70 : 2.50 :     15.90 :
```

```
RADVAN:GROSS/A/B          MOBILE-RAD-VAN        B. LOCKHART
ID: 00000000    07-27-92    12:26:18            1319          LMDA
Net Wt mg:    1.00  sd:    0.00
SN: 003  Repeat: 00    BG TIME (min):    5.00   SAMPLE TIME (min):    5.00
Alpha to Beta cpm:    0.00  sd:    0.00
  -:- COUNTS -:--- CPM ---:-BG CPM-:- NET CPM -:- %EFF-:--- DPM ---:- LLD dpm-
 A :         2 :       0.40 :    1.00 :     -0.60 : 1.60 :    -37.42 :    129.78
sd :      1.41 :       0.28 :    0.47 :      0.55 : 0.40 :     35.54 :
 B :        [illegible] : [illegible] : [illegible] : [illegible] : [illegible] : [illegible] :
```

Figure 2. Example of Report from Protean Instrument

APPROVED

ANALYTICAL PROCEDURE REVIEW AND APPROVAL

Method: Gross Alpha/Beta Screening of Soils, Waters, Filters, and Swipes within a Mobile Radiological Analysis Laboratory

Method No.: MLR100 **Revision No.:** 1

Team Leader Edward R Gonzales **Date:** 1-29-96

Group Leader Lara G Lock **Date:** 1/30/96

QA Concurrence Margaret A. Gautier **Date:** 1/30/96

APPROVED

GROSS GAMMA SCREENING OF SOILS, WATERS, FILTERS, AND SWIPES IN A MOBILE RADIOLOGICAL ANALYSIS LABORATORY

Analyte: All gamma-emitting nuclides	**Method No.:** MLR200
Matrix: Silicates, waters, filters, and swipes.	**Minimum Detectable Activity:** Matrix and time specific.
Procedure: Instrumental gamma-ray (NaI) counting	**Accuracy and Precision:** Matrix and time specific.
Effective Date: 05/12/92	**Author:** George Brooks Don Dale

SAFETY NOTE: Before beginning this procedure, read all of the material safety data sheets for the chemicals listed in Sec. 7. Read Sec. 4.3 of the Environmental Chemistry Safety Manual for information on personal protective clothing and equipment. Read Sec. 13 of this procedure and Source Material 14.4 and 14.5 for proper waste disposal practices.

1. Principle of Method

1.1. Samples are packaged in 500-mL (16-oz) Nalgene HDPE plastic bottles and are counted in a NaI(Tl) well scintillation counting system for 5 min. This procedure is completed without chemical processing.

1.2. The sample size for silicates is 100 g.

1.3. The samples size for waters if 500 mL.

1.4. The samples size for filters or swipes is per filter or per swipe.

2. Sensitivity

2.1. The limits of detection for silicates within this system, based on the 662-keV ^{137}Cs energy and a 5-min count are 3.0 pCi/g.

2.2. The limits of detection for waters within this system, based on the 662-keV ^{137}Cs energy and a 5-min count are 0.8 pCi/mL.

2.3. The limits of detection of filters or swipes, based on the 662- KeV ^{137}Cs energy and 5-min count are 243.0 pCi/unit, where the "unit" equates to either per filter or swipe.

3. Accuracy and Precision

3.1. This method is intended as a qualitative assessment of gross gamma activity. The accuracy and precision have been assessed using a ^{137}Cs (NIST SRM 4233B) silicate quality assurance material. Since the system is used primarily for the determination of activity of silicates, there is not data concerning the other matrices that can be analyzed.

Silicate Samples	=	97.7 ± 3.0% (N=86)
Waters	=	N/A
Filters/Swipes	=	N/A

4. Interferences

4.1. Although the method is intended to measure the gamma-emitting isotopes in the sample, the wall thickness of the detector and the detector housing assembly is such that high-energy beta particles will also be counted.

5. Collection and Storage of Samples

5.1. There are no special collection and storage requirements for these types of samples.

6. Apparatus

6.1. Bicron Model No. 5MW7Q/5, 5- × 7-in. NaI(Tl) well-type scintillation detector. The well dimensions are 3.0 in. diameter by 5.5 in. depth. The system is set in the "NORMAL" window mode, with an active energy range of 0.2 to 2.5 MeV.

6.2. Photomultiplier tube base with preamplifier: EG&G Ortec Model 276.

6.3. Amplifier: EG&G Ortec Model No. 572 amplifier.

6.4. Single-channel analyzer (SCA): EG&G Ortec Model No. 550A.

6.5. Counter/timer: EG&G Ortec Model 776 counter/timer.

6.6. Printer: EG&G Ortec Model No. 777A line printer.

6.7. High voltage power supply: EG&G Ortec Model No. 556.

6.8. Standard NIM rack assembly with ± 12 and 24 V.

6.9. Bottles: 500-mL, HDPE polyethylene, Nalgene, catalog no. 20002-0116.

6.10. Analytical balance: 300-g minimum capacity.

6.11. Bags: clear, low-density, polyethylene bags (0.002 in. thick) sized to fit 500-mL bottles. The bags protect the detector from surface contamination on the bottles.

6.12. Spatula and permanent ink marker.

6.13 Funnel: polyethylene.

7. Reagents

7.1. No reagents are required for this procedure.

8. Calibration and Standards

8.1. Prepare all standards and quality assurance materials from a NBS SRM 4233-B (or similar) ^{137}Cs solution.

8.1.1. Standards - silicates.

8.1.1.1. Prepare the soil standard by overspiking a known aliquot of the stock standard solution on 100 g of blank soil in the sample bottle and taking to dryness under an infrared heat lamp. Minimize contact of the solution with the walls or bottom of the container when preparing the overspike.

8.1.1.2. Thoroughly blend the dry standard and cap the bottle. Additional mixing may be provided by gently shaking the sealed bottle.

8.1.1.3. Mark the bottle with the appropriate information: isotope, activity level, SRM used, date prepared, preparer, notebook number, etc. Mark the bottle with tape denoting that it is a radioactive material.

APPROVED

8.1.2. Standards - waters.

8.1.2.1. Prepare the water standard by overspiking a known aliquot of the stock standard solution into 500 mL of blank water in the sample bottle. The blank water must be acidified (0.5 M HCl) to minimize absorption of the standard onto the walls of the container.

8.1.2.2. Mark the bottle with the appropriate information: isotope, activity level, SRM used, date prepared, preparer, notebook number, etc. Mark the bottle with tape denoting that it is a radioactive material.

8.1.3. Standards -Filters

8.1.3.1. Prepare the filter standard by overspiking a known aliquot of the stock standard solution on a Whatman number 42 filter. The filter is then placed in the 500 mL sample bottle. Minimize contact of standard with the side wall of the bottle, thus insuring complete contact with the standard itself.

8.1.4. Quality Control Materials (open).

8.1.4.1. Prepare quality control (QC) materials in 2 activity levels for each of the matrices. Repeat steps outlined in section 8.1. to create 2 levels of activity. Adjust the amount of standard added to each matrix blank.

8.1.5. Blank - Soil.

8.1.5.1. Prepare a blank soil sample by treating 100 g of dried, "clean" soil, as outlined in Step 8.1.2.2.

8.1.6. Blank - Water.

8.1.6.1. Add 500 mL of de-ionized water to the standard 500 mL Nalgene wide mouth bottle. Mark as appropriate.

8.1.7. Blank - Filter.

8.1.7.1. A Whatman number 42 liter is placed in the bottom of a 500 mL Nalgene wide mouth bottle. Mark as appropriate.

APPROVED

8.1.8. Blank - Instrumental.

8.1.8.1. A clean 500 mL Nalgene wide mouth bottle is used.

9. Procedure

9.1. Silicates.

9.1.1. Weigh 100 g of a dried soil sample into the 500-mL polyethylene bottle.

9.1.2. Tightly cap the bottle and clean off any exterior contamination.

9.1.3. Place the poly bottle in a plastic bag.

9.1.4. Because the detector efficiency and background are calculated with each sample set, triplicate standards and blanks should be counted with each sample set.

9.1.5. Place the standard in a plastic bag and insert it into the well counter.

9.1.6. Count the standard three times for 5 min each count. Multiple counting of the sample provides adequate counting statistics. Record each count on the NaI(Tl) Counting Log Sheet (see Fig. 1).

9.1.7. Remove the standard and insert the soil blank into the well. Count the blank soil three times for 5 min each count. Record each count on the log sheet.

9.1.8. Place the sample in the well counter.

9.1.9. Count the sample for 5 min.

9.1.10. Record the counts, sample number, weight of sample, date counted, and any other distinguishing information on the NaI(Tl) counting log sheet.

9.2. Waters.

9.2.1. Load 500 mL of the sample into the 500-mL polyethylene bottle.

9.2.2. Follow steps 9.1.2. through 9.1.10. substituting the appropriate matrix.

9.3. Filters.

9.3.1. Place a Whatman number 42 filter in the bottom of the 500-mL polyethylene bottle.

9.3.2. Follow steps 9.1.2. through 9.1.10. substituting the appropriate matrix.

10. Operation of the Instrument

10.1. Turn ON the voltage to the NIM bin.

10.2. Turn on the high-voltage supply for the NaI(Tl) detector, 1000 volts, positive. The readout on the HV supply will read **1.0**.

10.3 Check that the timer/counter is set properly. The thumbwheel for the timer should read **5 0**; the time increment is already set at 1.0 min intervals by a jumper inside the unit. The dwell time knob should be off, the timer/counter switch should be at **Count (A)**, and the discriminator potentiometer should be at **0.2 V**.

10.4. The line printer should be switched on, and the cycle switch should be at **ONE CYCLE**.

10.5. To initiate the counter, proceed with the following:

10.5.1. Depress the **STOP** button to complete any counting cycle that may be in progress.

10.5.2. Depress the **RESET** button to reset the counter to the first part of the counting cycle.

10.5.3. Depress the **COUNT** button to start the counting sequence.

10.6. After the count has been completed, the line printer will print the time of the count and the total counts for that sample. The display on the timer/counter will also display this information.

10.7. Record this information on the NaI(Tl) counting log sheet.

10.8. If any of the operations above produce suspicious results, or none at all, contact the MRAL manager immediately.

APPROVED

11. Calculations

11.1. Since the efficiency factor is calculated with each sample set, the values obtained from counting the standard and blanks are used to determine the efficiency of the counting system for that sample set.

11.2. Determine the mean value of the triplicate counts of the standard and the matrix blank. Record these values on the bottom of the counting log sheet.

11.3. The following equations are embedded within the reduction program (see Appendix A). This program provides the user with the vehicle by which all the final data reduction processes are accomplished. A condensed version of the data reduction process is explained within Section 12, "Data Reduction, Handling and Storage" of this procedure.

11.4 Counting efficiency.

11.4.1. The mean counting efficiency for each sample set is determine utilizing the following equation:

$$\bar{E} = \frac{(\bar{C}_s - \bar{C}_b)}{(t * A_s)} \quad ,$$

where $\bar{E}$ = Mean gamma efficiency,
$\bar{C}_s$ = Mean (n=3) gross counts of the standard,
$\bar{C}_b$ = Mean (n=3) gross counts of the background,
t = Count time (minutes),
A_s = Activity of the standard (dis/min),

11.5 Sample Activity.

11.5.1 The sample activity is calculated using the following equation:

$$A_G = \frac{(C_g - \bar{C}_b)}{(t * \bar{E} * x * 2.22)} \quad ,$$

where A_G = Sample gamma activity in pCi/x,
C_g = Gross gamma counts,
$\bar{C}_b$ = Gross background counts (instrumental or matrix derived),

APPROVED

t	=	Count time (minutes),
$\bar{E}$	=	Mean gamma efficiency,
x	=	Sample aliquot used for the analysis - g, mL, filter or swipe, and
2.22	=	Conversion factor to pCi.

11.6 Sample Uncertainty

11.6.1 The uncertainty associated with the analysis of the sample is derived utilizing the following algorithm. This uncertainty is derived from the counting statistics and background errors only, and currently defaults at the 3 sigma (σ) confidence level.

$$U_G = \frac{3 * \sqrt{ABS\left(\frac{C_g}{t} + \frac{\overline{C_b}}{t}\right)}}{(\bar{E} * x * 2.22)} ,$$

where

U_G	=	Gamma uncertainty in pCi/unit,
3	=	3 sigma qualifier,
C_g	=	Gross gamma sample counts,
$\overline{C_b}$	=	Background counts (instrumental or matrix derived),
t	=	Count time (minutes),
$\bar{E}$	=	Mean gamma efficiency,
x	=	Sample aliquot used for the analysis - g, mL, filter or swipe, and
2.22	=	Conversion factor to pCi.

11.7 Minimum detectable activity (MDA).

11.7.1 The minimum detectable activity is derived from the following algorithm,

$$MDA = \frac{\left(2.71 + 4.65\sqrt{\overline{C_b}}\right)}{(t * \bar{E} * x * 2.22)} ,$$

APPROVED

where MDA = The minimum detectable activity (pCi/unit) of the samples based on a 3 sigma level of confidence,

$\bar{C}_b$ = mean of background counts. The final derived MDA will differ based upon whether an instrumental or matrix blank is used within this equation,

t = count time (minutes),

E = mean gamma efficiency,

x = sample aliquot used for the analysis - g, mL, filter, or swipe, and

2.22 = conversion factor to pCi.

12. Data Reduction, Handling and Storage

12.1 The raw data, as expressed on the NaI(Tl) counting log sheet, is now ready to be entered into the data reduction program (see Appendix A for specific details). The front end of the program is user friendly, and as such provides an easy path to reduce and compile the data.

12.2 A preliminary field report is generated, saved electronically as an .rpt file, and a copy delivered to the field teams.

12.3 The raw data generated from the analysis process is compiled with data sheets from any remaining analyses and placed within folders for future data storage.

12.4 This information is returned to the fixed based laboratories where the content of these data packages are examined, and the electronic data is transferred for storage into the users database (ie., FIMAD for the Environmental Restoration program).

12.5 Final disposition and long term storage of the these data packages are taken care of when the data packages are delivered to the users information storage facility (Field Sample Facility for the Environmental Restoration program).

12.6 For more specific details concerning the transfer within the MRAL's and the fixed base labs, please refer to procedure MLR600 for more details.

13. Proper Waste Disposal Practices

13.1. Solid waste.

13.1.1. Sample-contaminated waste.

13.1.1.1. Sample-contaminated waste includes plastic weigh boats, spatulas, used planchets, Mylar, syringes, centrifuge tubes, filter disks, and gloves.

13.1.1.2. The boxes, as well as the plastic bags, are labelled as radioactive waste and any material that come in contact with samples will be considered suspect radioactive.

13.1.1.3. When the boxes are full, the plastic bags are removed and sealed with tape. The plastic bags are transported to the basement at TA-59, OH-1 for further compaction.

13.1.1.4. The plastic bags are stored at TA-59 until the appropriate documentation is completed and approved by Waste Services (CST-17).

13.1.1.5. The area waste coordinator should be notified to initiate the waste removal process. He/she will assist in completing the necessary forms.

13.1.2. Sample waste.

13.1.2.1. Once analysis has been completed for all analysis requested by the customer, all aliquots taken for analysis should be placed back into the original sample container submitted by the customer. This includes the 100-g sample from the gross gamma instrument, the 15 g from the extraction for tritium analysis, and the 15 g sample for the soil moisture analysis.

13.1.2.2. The original sample container should be returned to the customer following chain-of-custody protocols.

13.2. Liquid waste.

13.2.1. No liquid waste is generated from this procedure.

13.3. Waste pickup.

13.3.1. The waste is stored at TA-59 OH-1 while the necessary waste removal forms are generated and cleared through CST-17.

13.3.2. The are waste coordinator should be notified to initiate the waste removal process. He/she will assist in completing the necessary forms.

APPROVED

14. Source Materials

14.1. Procedure no. ER150, "Gross Gamma in Environmental Matrices," *Health and Environmental Chemistry: Analytical Techniques, Data Management, and Quality Assurance*, M. A. Gautier, Ed., Los Alamos National Laboratory Manual LA-10300-M, Vol. I (1987).

14.2. EML Procedures Manual, 26th ed., H.L. Volchock and G. de Planque, Eds., Environmental Measurements Laboratory, U.S. Department of Energy, New York, HASL-300 (1986).

14.3. "Low-Level Radioactive Solid Waste," Administrative Requirement 10-2, in *Environment, Safety, and Health Manual*, Los Alamos National Laboratory Manual, Chapter 1 (most recent edition).

14.4. "Chemical, Hazardous, and Mixed Waste," Administrative Requirement 10-3, in *Environment, Safety, and Health Manual*, Los Alamos National Laboratory Manual, Chapter 1 (most recent edition).

This procedure has been extensively revised and detailed changes are not redlined.

APPROVED

NaI(TI) Counting Log Sheet

Sample Set: TA-21 (Rad Tech)
Count Time: 5 min
ROI's:
Sample Owner:
Date: 7/30/92

Sample	Vol/Wt	Counts	D/M	Comments
Soil Blk		35803		
"		35822	35723	
"		35551		
Std#2		155808		
		156094	155702	
		155203		
1399		34761		LMDA
1400		35154		"
1401		35115		"
1402		35113		"
1403		34957		"
1404		35260		"
1405		35519		"
1406		35310		"
1408		35481		"
1409		35434		"
1410		38493		LMDA 8.1 ± 0.5
1413		37785		3.8 ± 0.4
Soil Blk		38893		
		38743		
		37488		
1414		35604		LMDA
1415		36125		"
1416		36253		"
1417		35327		"
1418		35676		"
1419		35622		"
1420		35884		"

Figure 1. Gross gamma log sheet.

APPROVED

ANALYTICAL PROCEDURE REVIEW AND APPROVAL

Method: Gross Gamma Screening of Soils, Waters, Filters, and Wipes within a Mobile Radiological Analysis Laboratory

Method No.: MLR200 **Revision No.:** 1

Team Leader Edward R Gonzales **Date:** 1-27-96

Group Leader [illegible] **Date:** 1/30/96

QA Concurrence Margaret A. Gautier **Date:** 1/30/96

Mobile Radiological Analysis Laboratories Performance Trends Discussions for CY 1993, 1994, & 1995.

The data as expressed within the following pages, is based on 2 1/2 years of analysis data of open quality assurance materials (laboratory control samples - LCS's). The samples are overspikes of NIST traceable solutions on matrix specific size, weight, and density materials developed to mimic the sample types which are routinely measured. These materials, developed by the Quality Assurance section of group CST-3, are routinely made once a week, and delivered to the analyst's at the beginning of the week. These quality assurance materials are counted for the same counting intervals as the routine samples, 5 minutes for gross alpha/beta/gamma and tritium, 8.3 minutes for gamma spectroscopy.

As seen within the performance charts, the LCS's consist of Pu^{239} on 200 mg of soil (200 & 500 pCi total activity) for the gross alpha measurement, Sr^{90} in equilibrium with its' Y^{90} daughter on 200 mg of soil (200 & 500 pCi total activity) for the beta component, Cs^{137} and Am^{241} in 100 grams of soil (5-60 pCi/g) for the gamma spectroscopy portion, H^3 and a known amount of H_2O on 15 grams of soil (5-60 pCi/g & 2-5.5%) for the tritium and percent moisture determinations, and Cs^{137} on 100 grams of soil (5-35 pCi/g) for the gross gamma analysis.

The tables express the ratios (the measured value over the consensus value of the sample) on the y-axis, versus the occurrence number on the x-axis (the time of the year (CY) that the sample was analyzed). Occurrence number 1 indicates that this was the first sample run in the year, but does not necessarily reflect that the sample was analyzed in January. The ratio indicates how well the measured value of the sample compares to the consensus value; the closer to one (1.0), the greater level of confidence can be implied with that sample. Other parameters expressed include the average of the ratio's, the 1 sigma standard deviation of those ratio's, the maximum and minimum found within the data set, the number of measurements taken, and the percent relative standard deviation (%RSD), also known as the coefficient of variation, that expresses the normalized variance of the population, or the precision of the process.

Examination of the performance charts show good agreement (or as well as can be expected) with all of the analysis, except the gross alpha and beta measurements. As I have explained within the memo, illustration of the gross alpha/beta QC data show what is expected; expression of the true bias of the method. The large spread in the data for 1993 yielded a relatively good ratio, but a poor %RSD. Early in 1994, recalibration, longer purge times, and re-adjustment of the Pulse Height Analyzer (PHA) discriminator defined a much tighter, low %RSD, biased data set to develop.

Suggestions have been raised as to the validity of determining whether or not a constant could be defined and implemented within the gross alpha/beta data reduction algorithm, based on the historical evidence, that would correct for this bias. Would utilization of this constant provide a better estimate the "true" alpha and beta activity within the sample? This, I believe, may be a question better left to the guidance of the ER Chemistry Team.

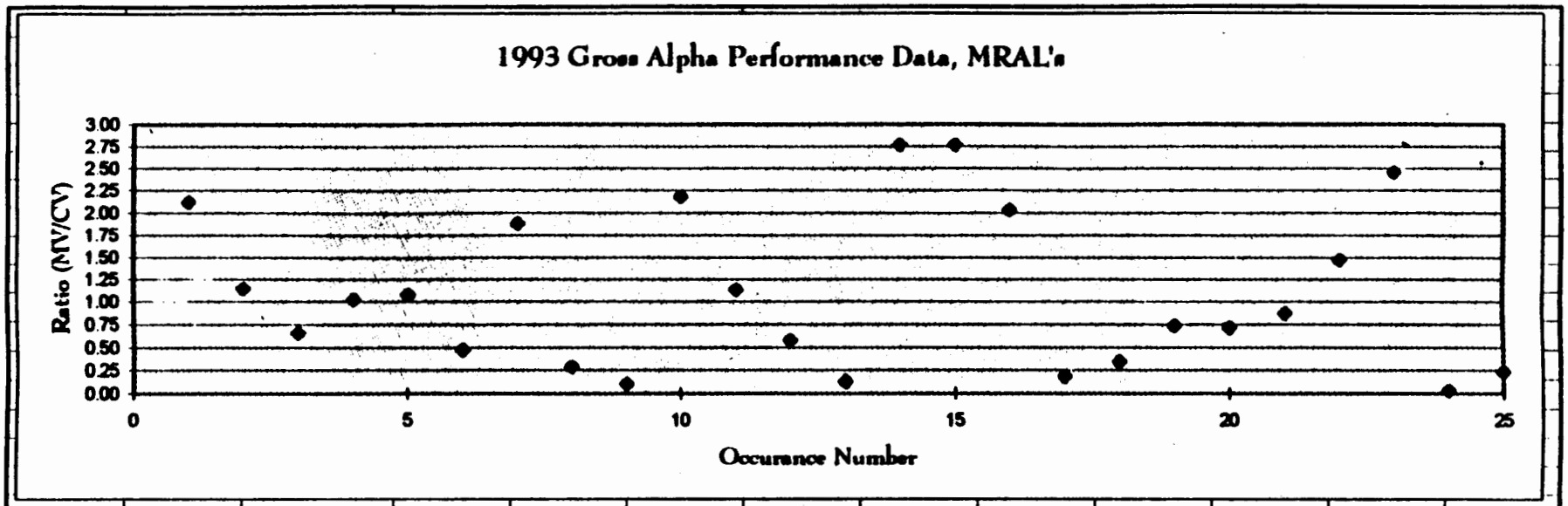

Mean of Ratio's -	1.10
SD of Ratio's	0.72
Max -	2.76
Min -	0.03
N =	25.00
%RSD =	65.67

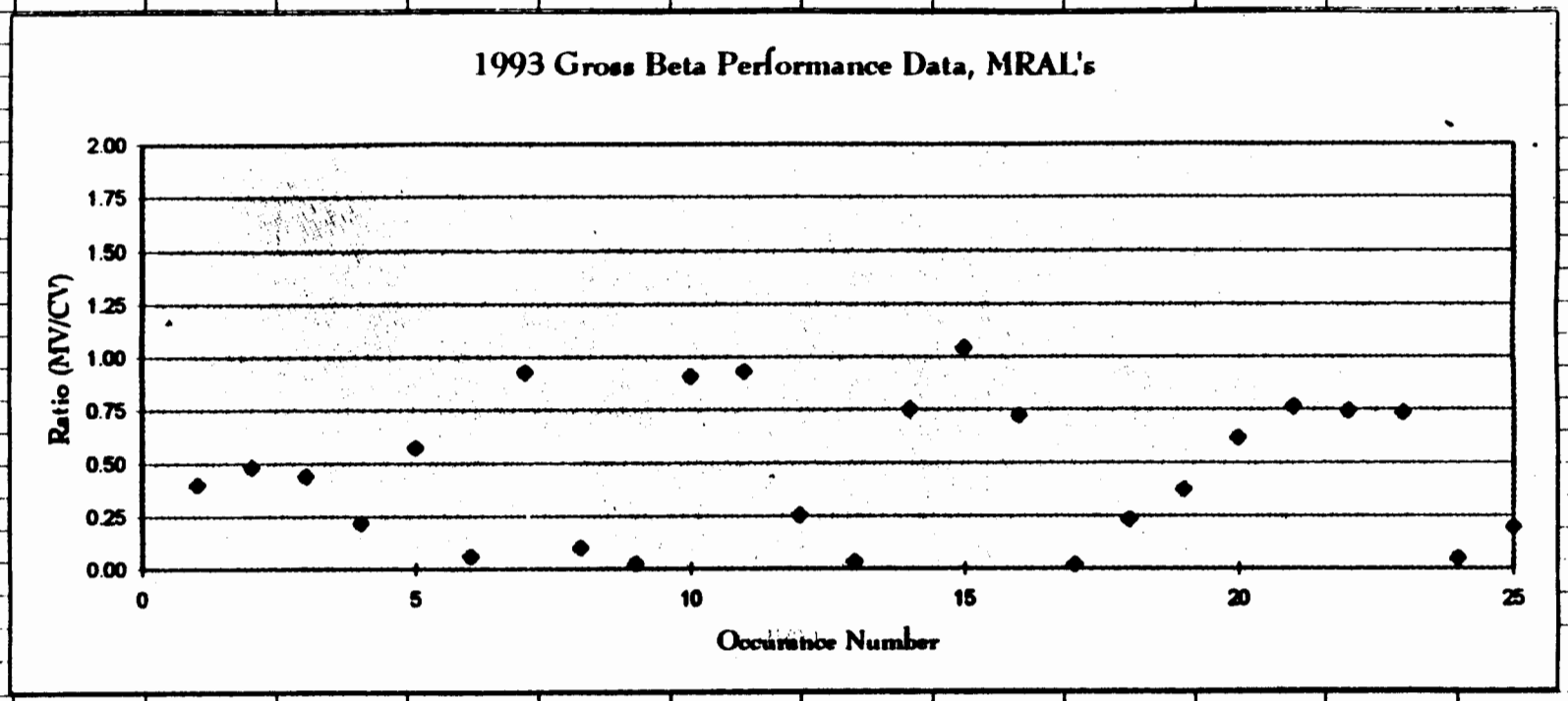

Mean of Ratio's -	0.46
SD of Ratio's	0.29
Max -	1.04
Min -	0.02
N =	25.00
%RSD =	62.78

H3RV93

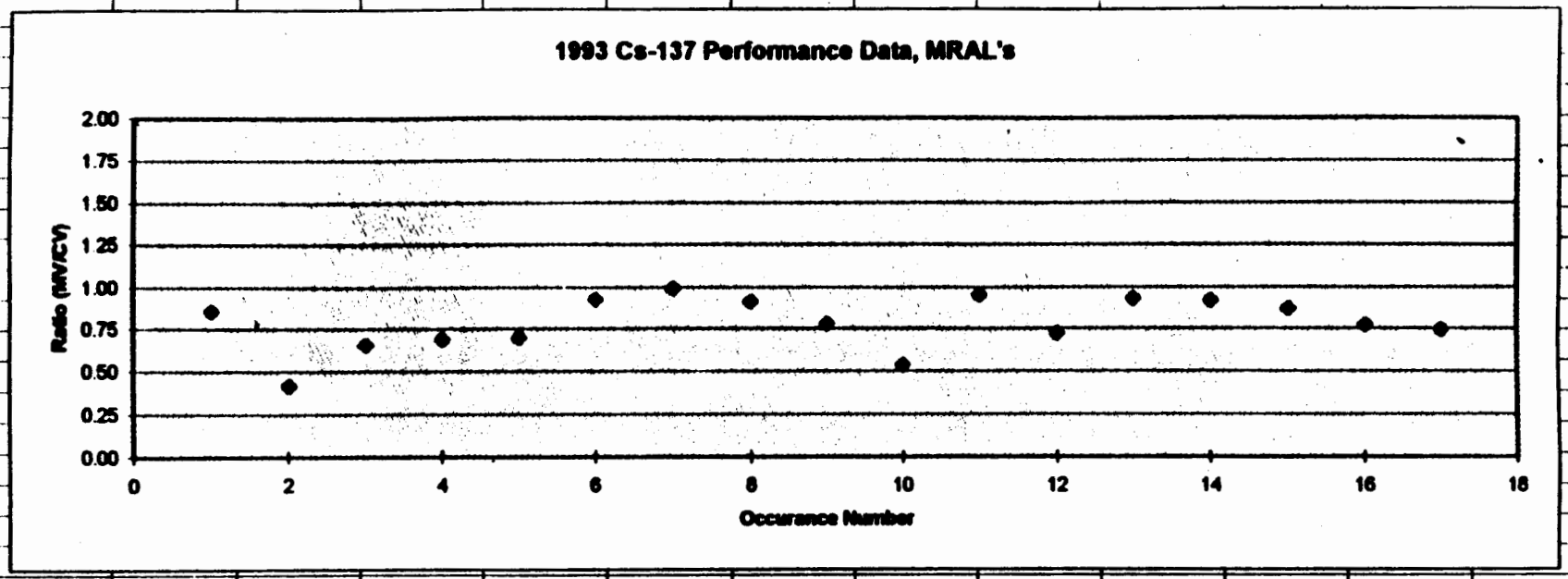

Mean of Ratio's -	0.79
SD of Ratio's	0.12
Max -	0.99
Min -	0.42
N =	17.00
%RSD =	15.85

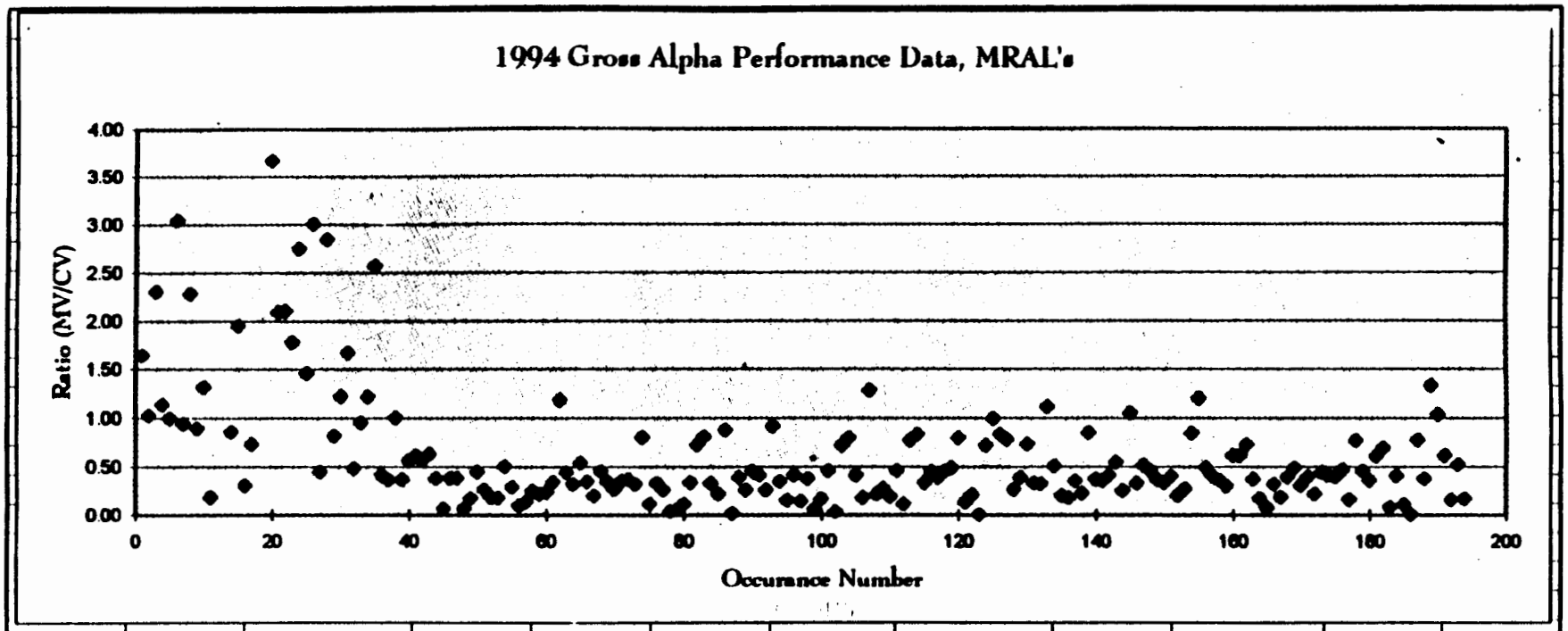

Mean of Ratio's -	0.75
SD of Ratio's -	0.60
Max -	12.29
Min -	0.01
N =	194.00
%RSD =	79.60

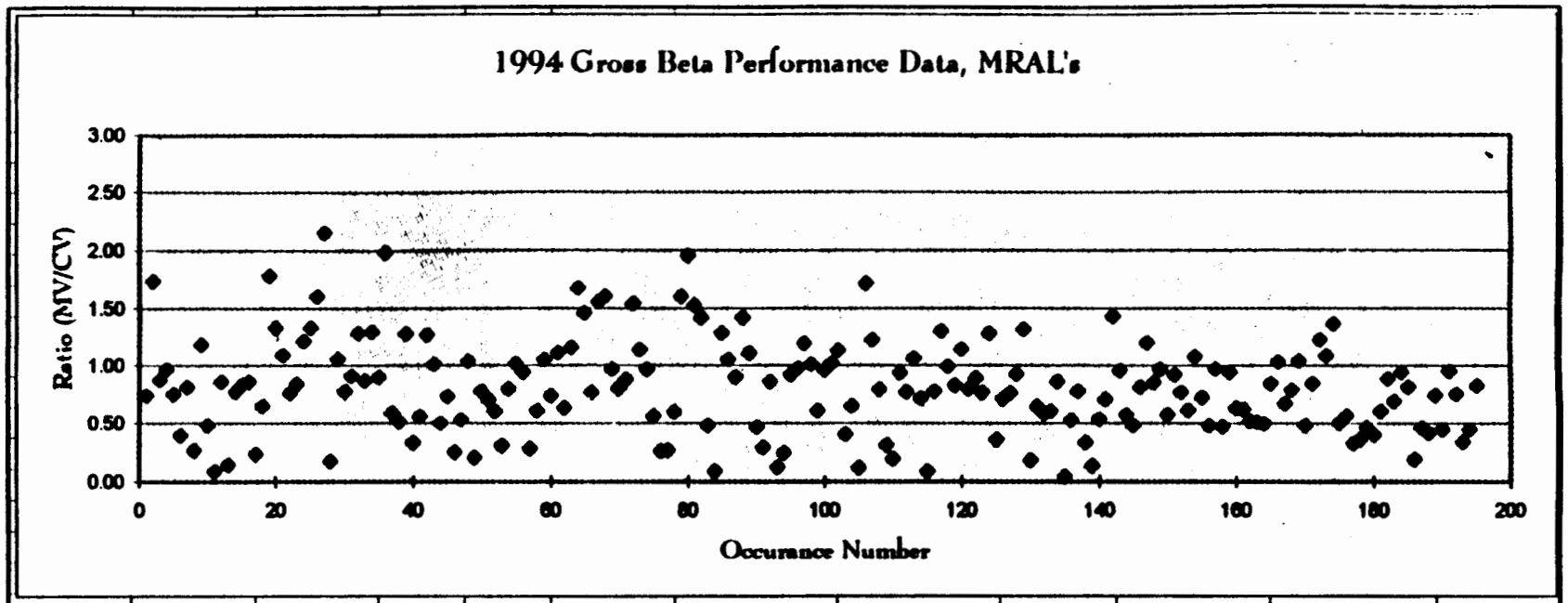

Mean of Ratio's -	0.81
SD of Ratio's -	0.32
Max -	2.15
Min -	0.04
N =	195.00
%RSD =	39.08

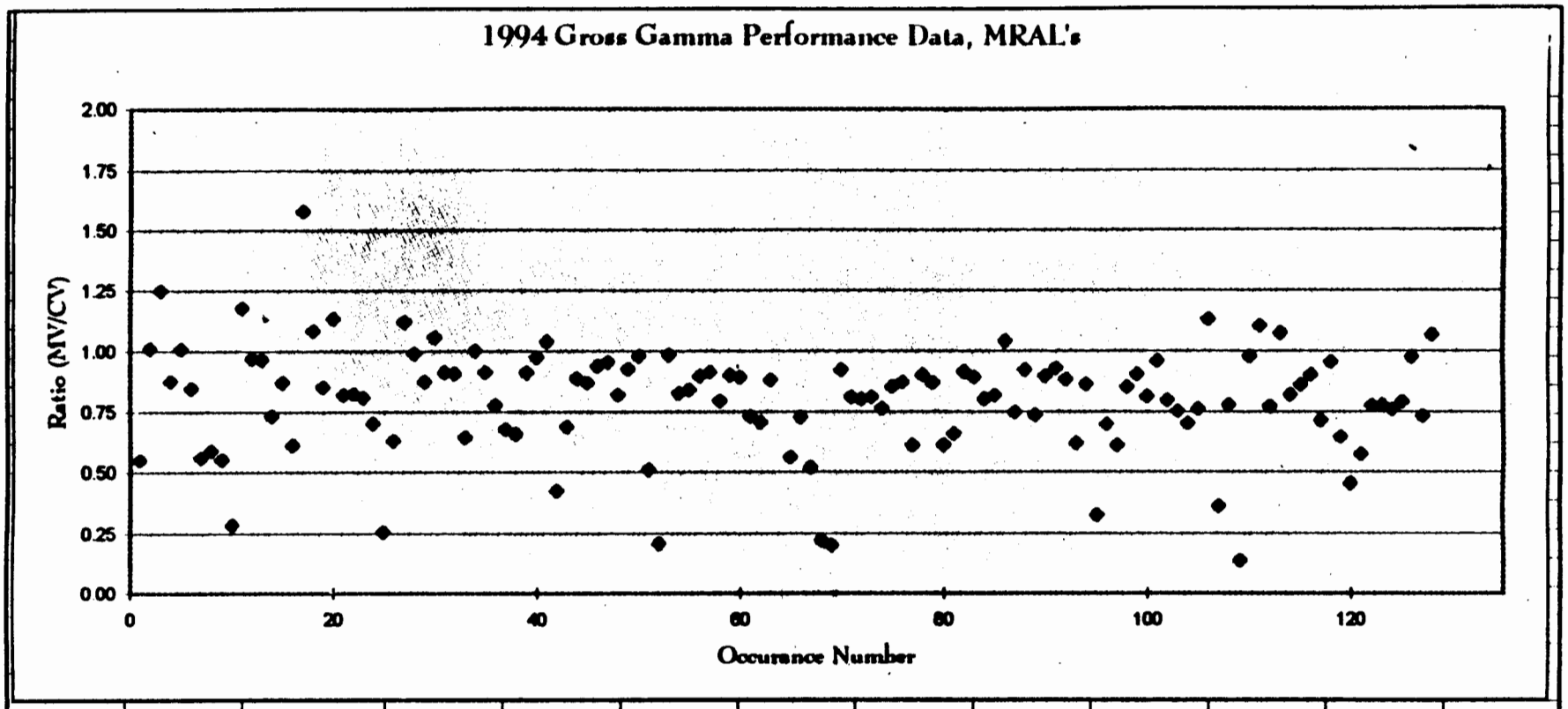

Mean of Ratio's -	0.83
SD of Ratio's -	0.19
Max -	4.70
Min -	0.14
N =	128.00
%RSD =	22.73

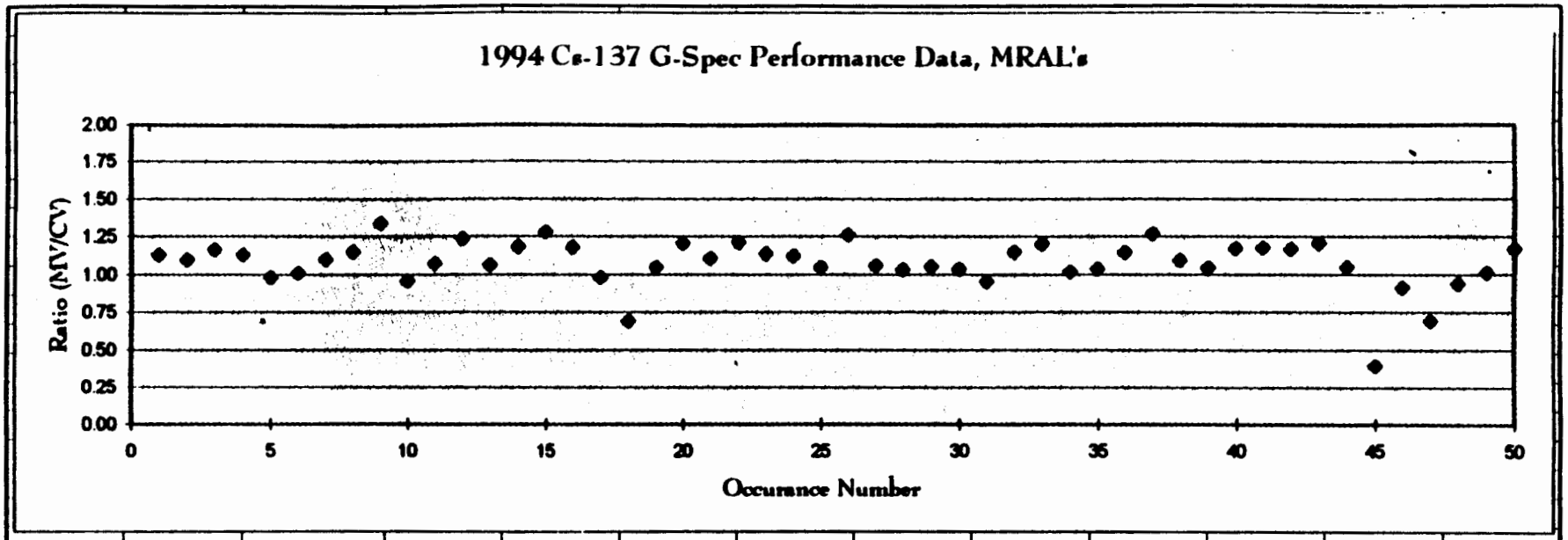

Mean of Ratio's -	1.08
SD of Ratio's	0.11
Max -	1.34
Min -	0.40
N =	50.00
%RSD =	9.94

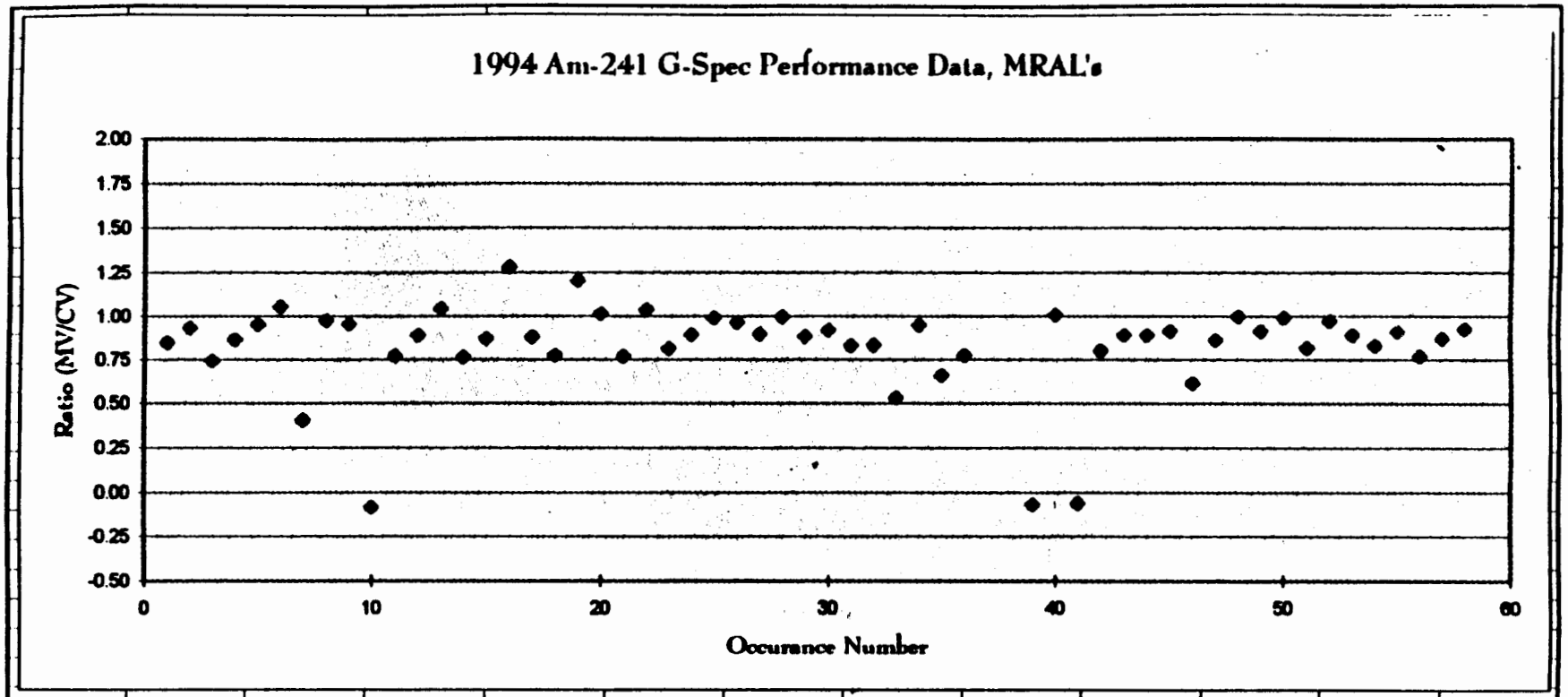

Mean of Ratio's -	0.83
SD of Ratio's -	0.16
Max -	1.28
Min -	-0.08
N =	58.00
%RSD =	18.68

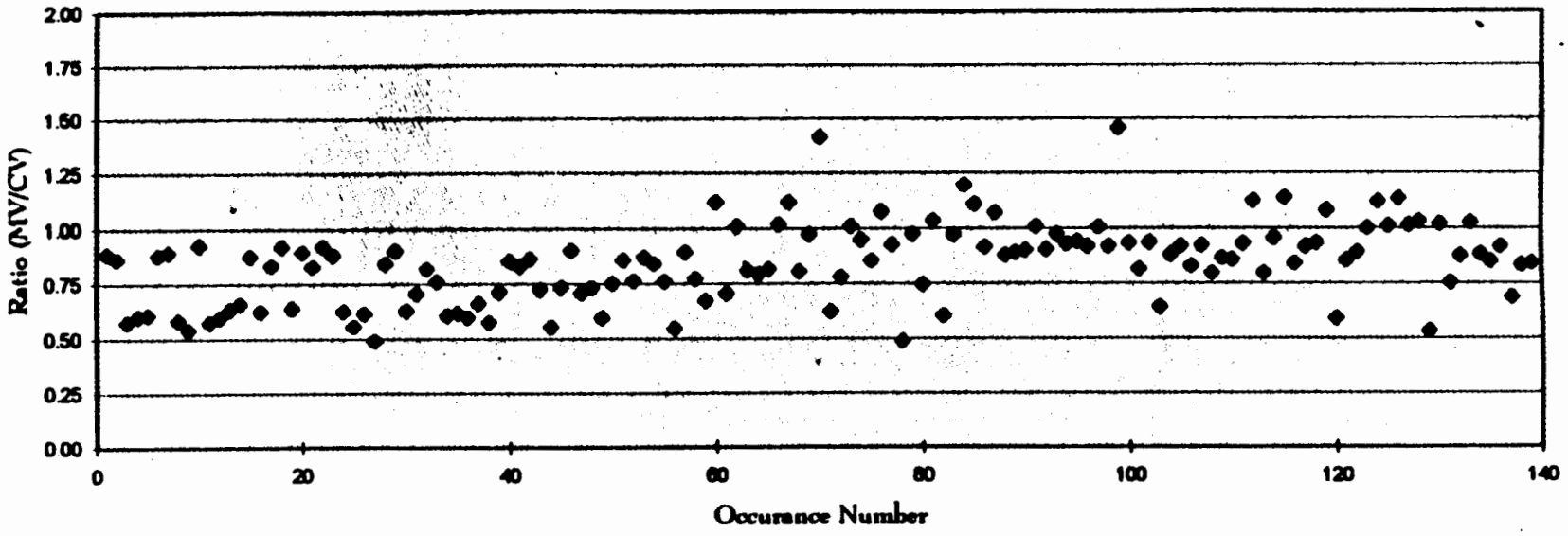

Mean of Ratio's	0.84
SD of Ratio's	0.14
Max -	1.46
Min -	0.49
N =	143.00
%RSD =	16.37

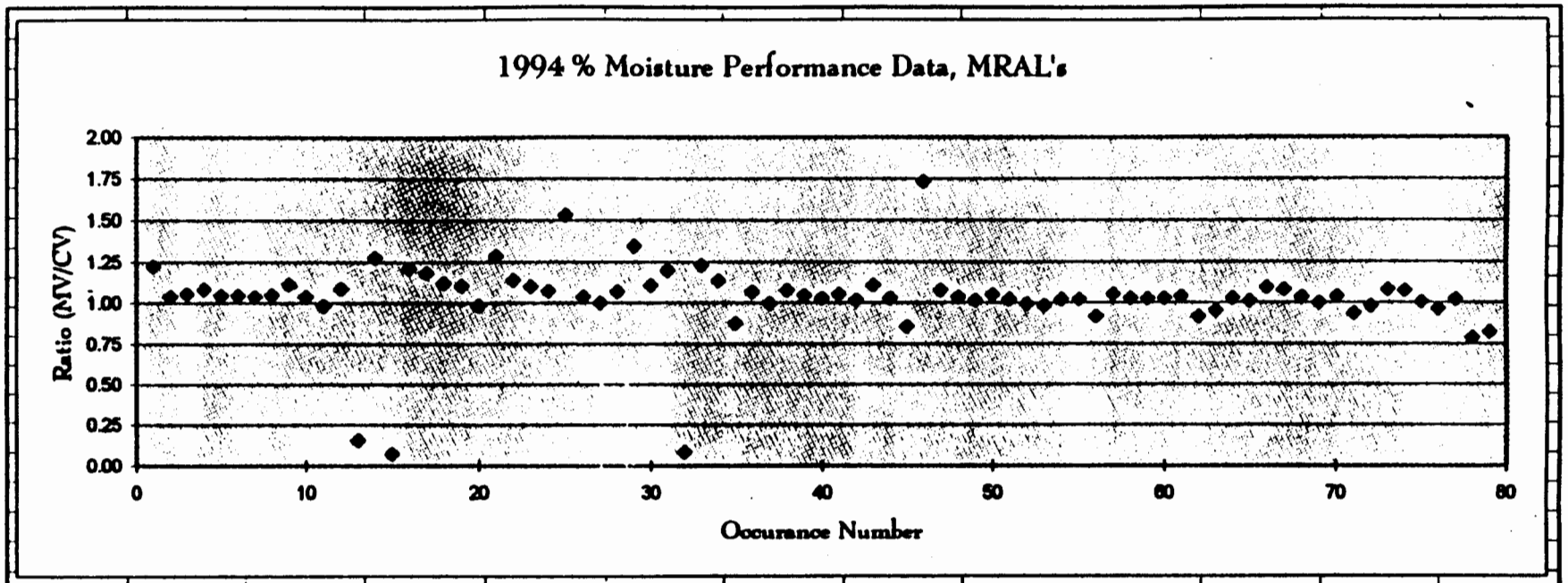

Mean of Ratio's -	1.03
SD of Ratio's -	0.11
Max -	1.73
Min -	0.07
N =	79.00
%RSD =	10.86

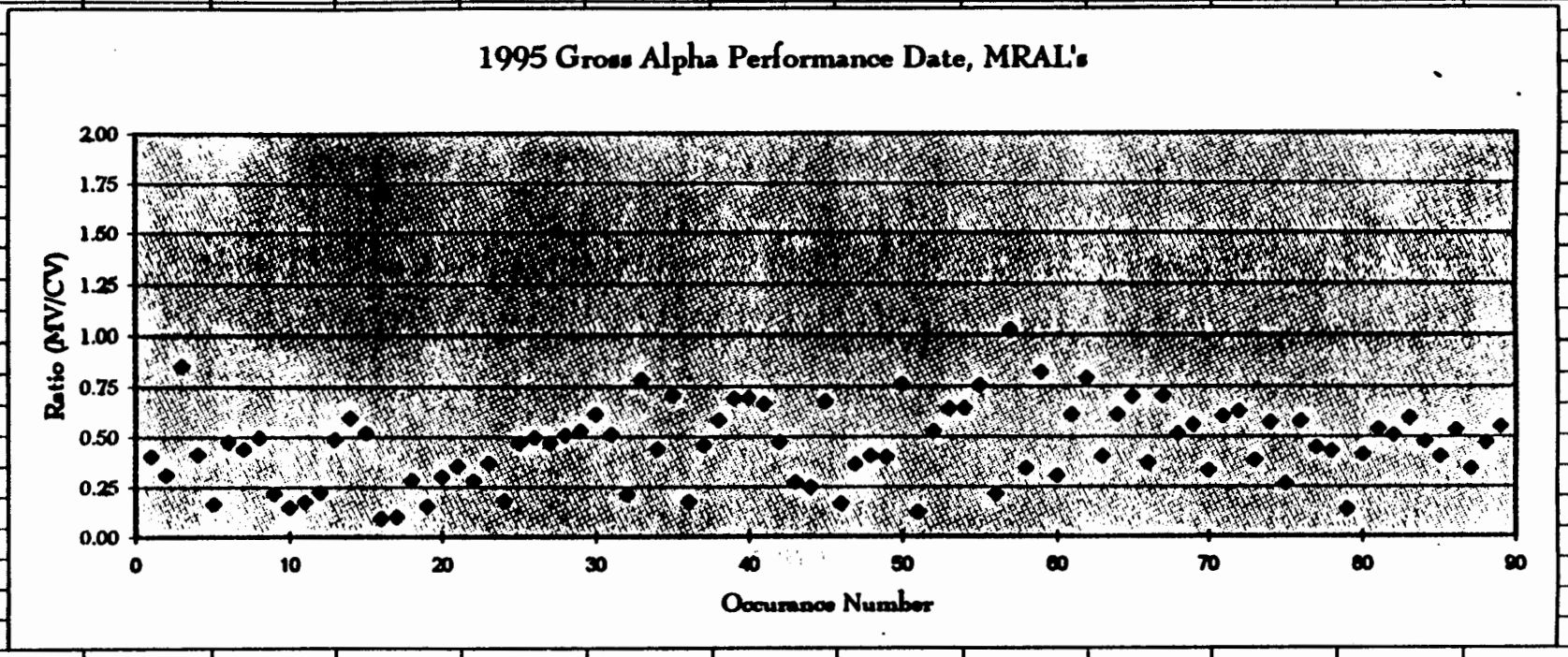

Mean of Ratio's	0.46
SD of Ratio's	0.16
Max -	1.02
Min -	0.09
N =	89.00
%RSD =	34.37

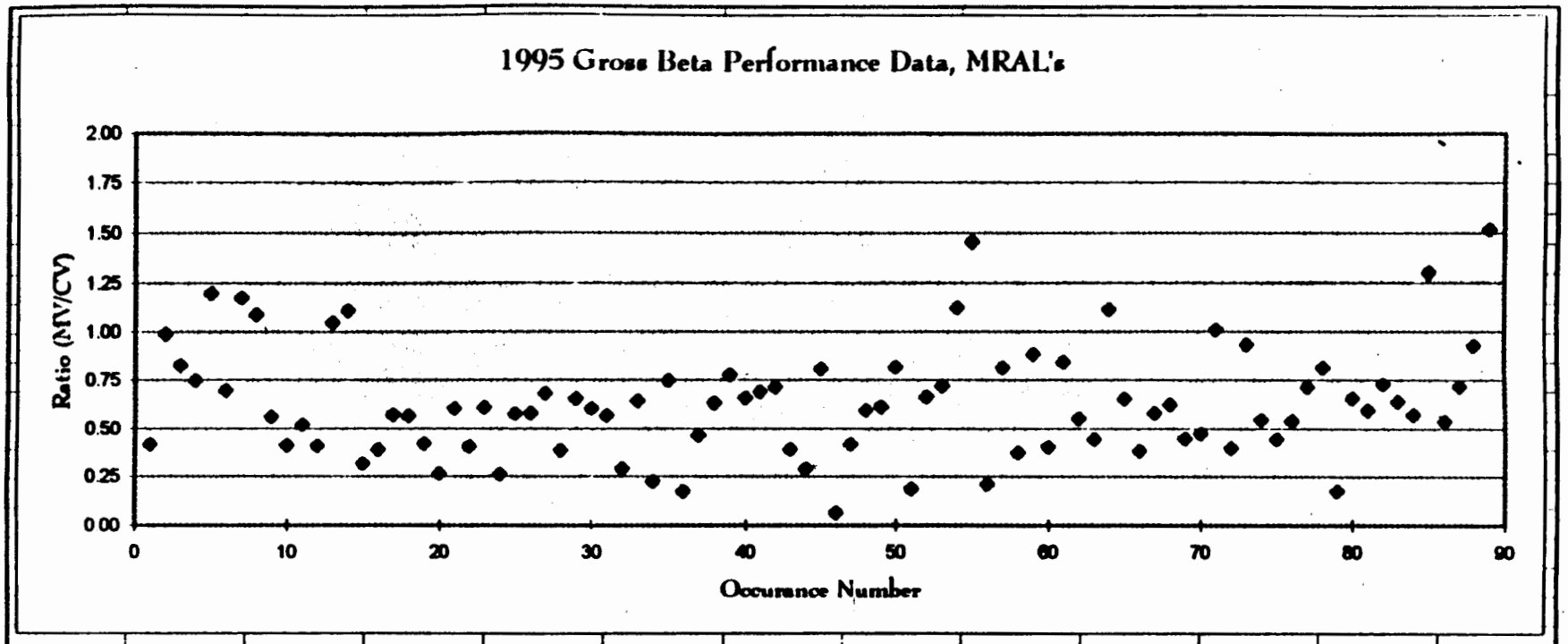

Mean of Ratio's -	0.63
SD of Ratio's -	0.22
Max -	1.52
Min -	0.06
N =	89.00
%RSD =	34.08

GGRV95

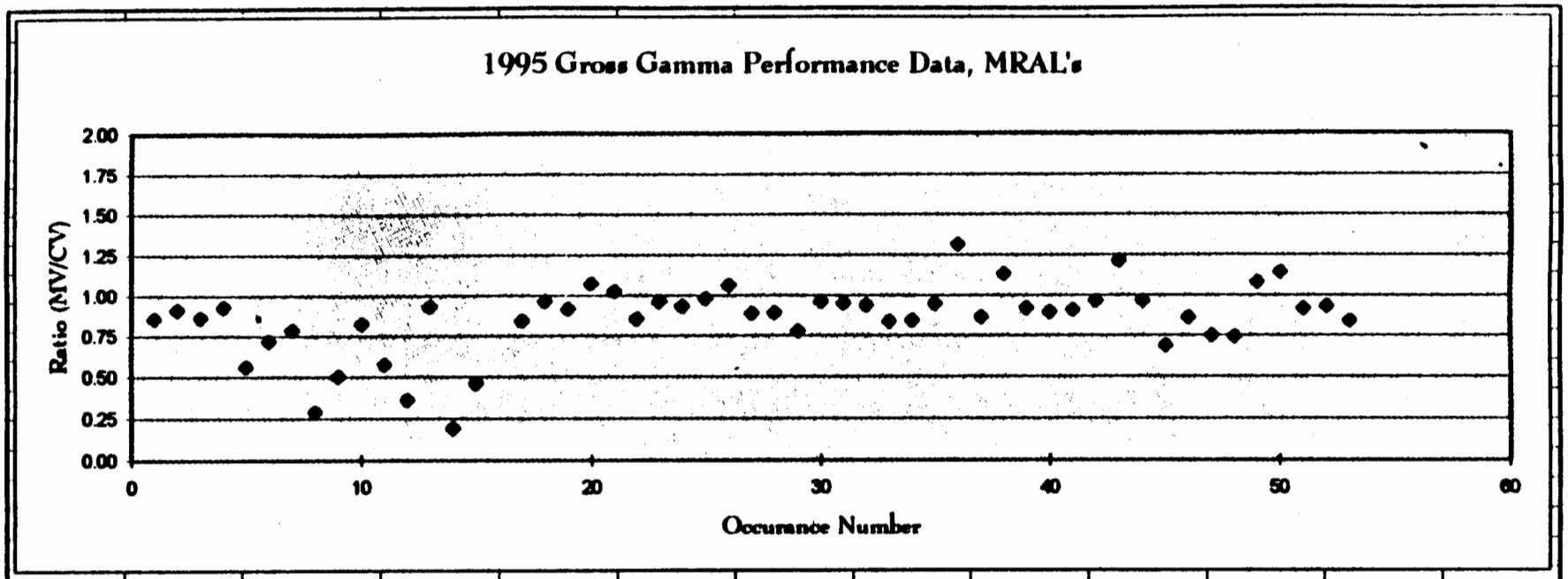

Mean of Ratio's -	0.86
SD of Ratio's -	0.15
Max -	1.31
Min -	0.19
N =	53.00
%RSD =	17.09

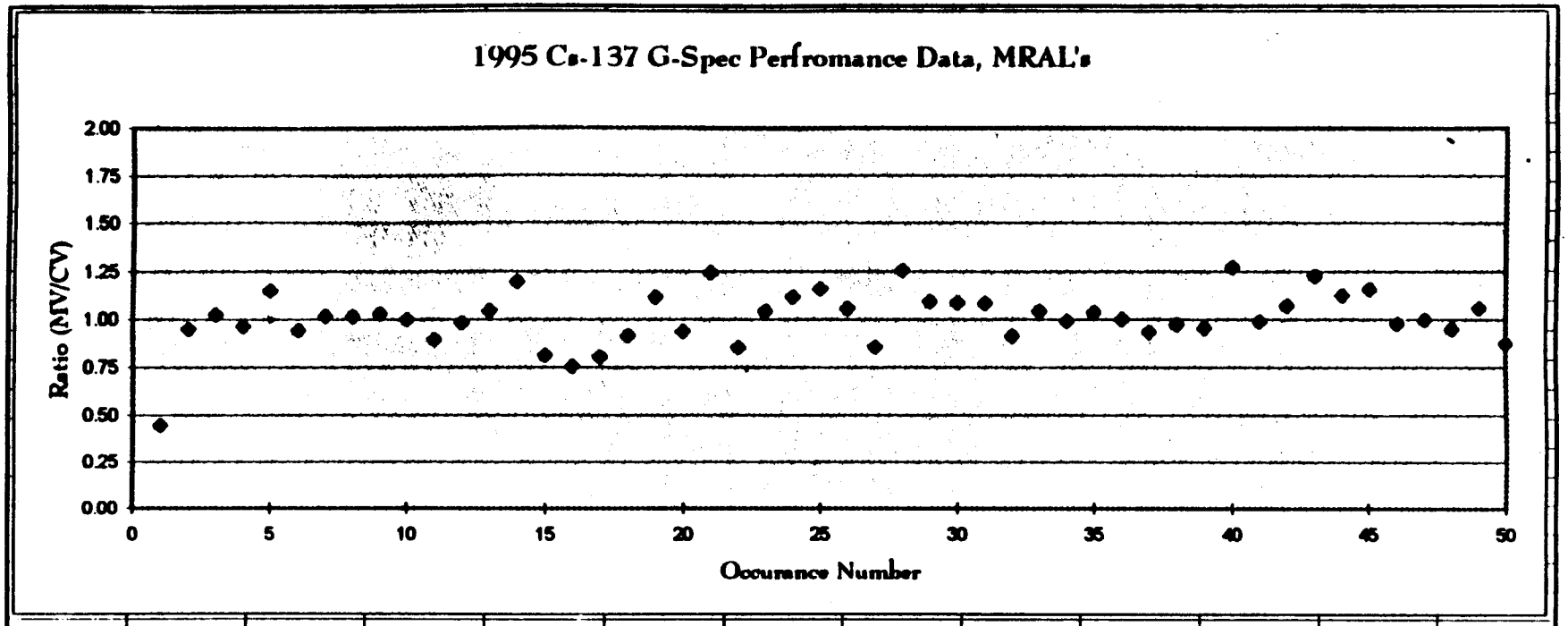

Mean of Ratio's -	1.01
SD of Ratio's -	0.10
Max -	1.27
Min -	0.45
N =	50.00
%RSD =	9.99

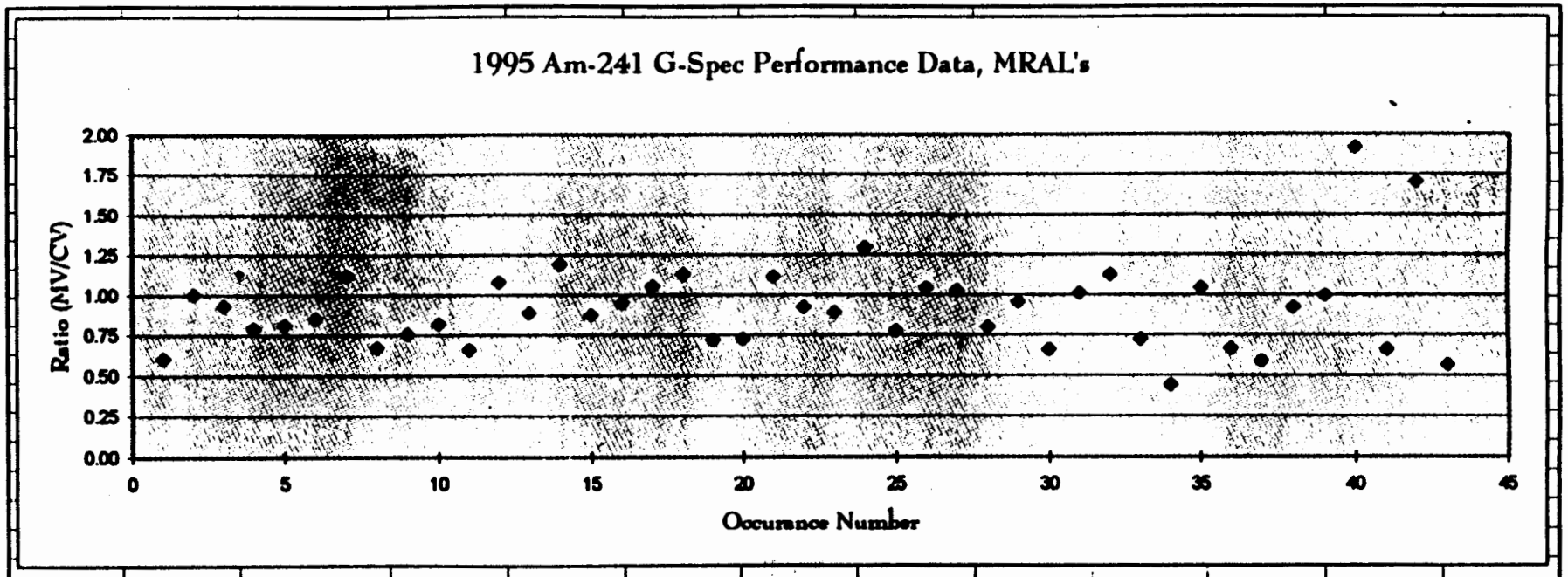

Mean of Ratio's -	0.92
SD of Ratio's -	0.20
Max -	1.92
Min -	0.44
N =	43.00
%RSD	21.56

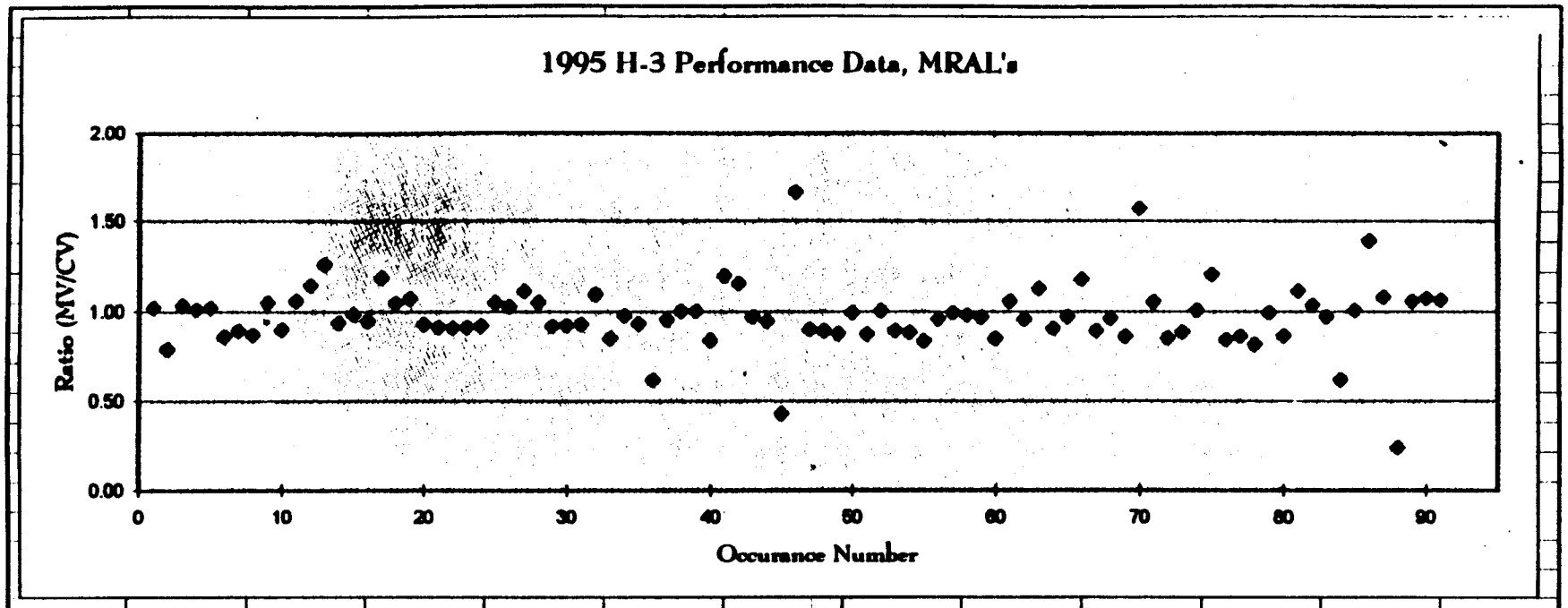

Mean of Ratio's -	0.97
SD of Ratio's -	0.12
Max -	1.66
Min -	0.24
N =	91.00
%RSD =	11.91

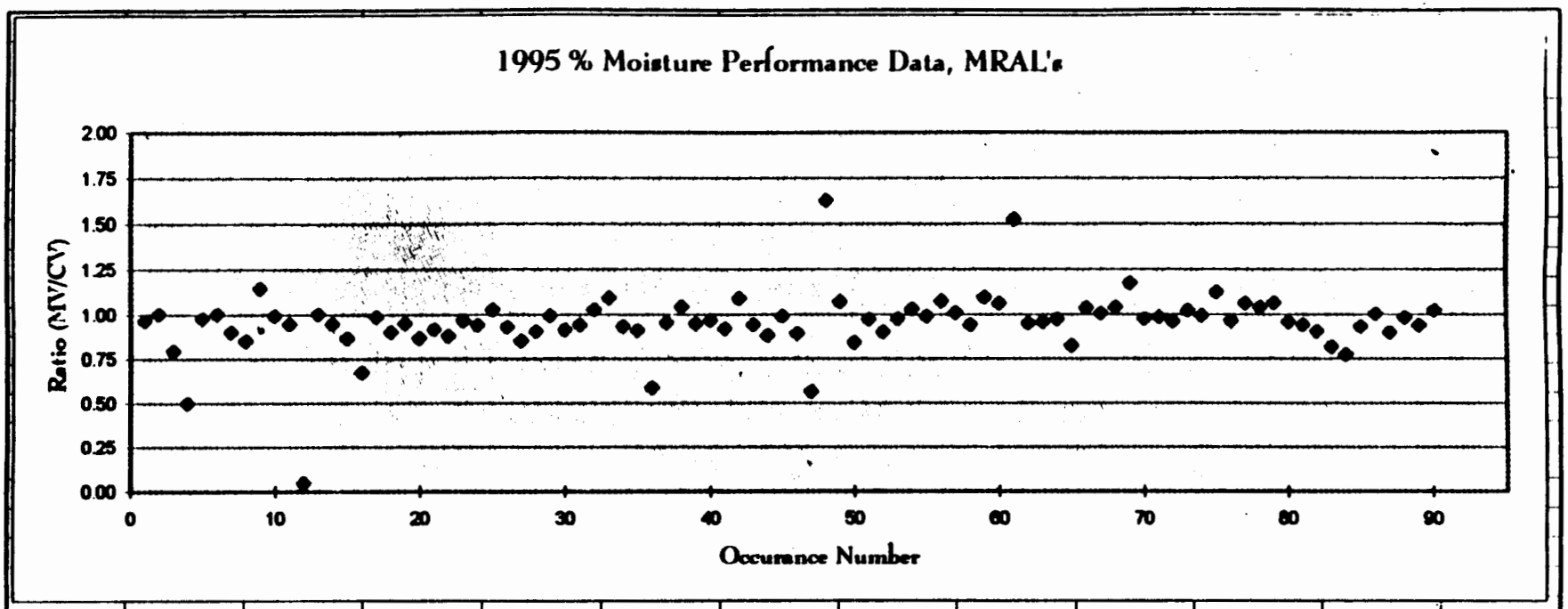

Mean of Ratio's -	0.95
SD of Ratio's -	0.10
Max -	1.63
Min -	0.05
N =	90.00
%RSD =	10.11

DOE-EML Gamma Spectrometry Data Validation Program - Synthetic Spectra

The following page contains the summation of the performance of both CST-9's MRAL, and the in-house laboratory. Three synthetic spectra were analyzed utilizing the analysis protocols of the MRAL's, and the in-house laboratory, along with a blank and calibration files as supplies from EML.

This was the first test of this program, and will become a regularly scheduled part of our performance check protocol:

Gamma Spectrometry Data Validation Program Results of the May, 1996 Distribution

(MRAL = Mobile Radiological Analysis Laboratory, IH = CST-9 In-House analytical laboratory)

	Sample #1			Sample #2			Sample #3		
Nuclide	Value (Bq)	MRAL	IH	Value (Bq)	MRAL	IH	Value (Bq)	MRAL	IH
Mn-54	17.00	17.88	17.90						
Co-57	12.00	12.80	12.10						
Cs-137	21.00	21.70	22.20				5.90	5.44	5.70
Ce-144	128.00	127.00	140.00	8.00	8.77	8.45	3.00	3.05	-
Be-7				5.10	5.31	5.08			
Nb-95				4.70	4.93	4.93	7.40	7.34	7.32
Zr-95				2.00	2.19	2.10	2.30	2.15	2.22
Ru-103				4.70	4.83	4.53	6.00	5.78	5.45
Pb-210				3.30	0.46	-			
Sb-125							2.00	1.63	1.82
Sb-126							3.10	2.65	2.92
I-131							16.20	15.99	15.80
Te-132							23.00	23.33	28.40
Xe-133							6.40	5.16	-
Cs-134							5.40	5.10	5.18
Cs-136							3.60	3.56	3.59
Ba-140							10.00	10.07	8.00
Ce-141							1.30	1.10	-
Dy-166							7.20	4.97	-

(** Note - The values listed in red were analyzed for and found, but not reported in the report to EML)

Los Alamos
National Laboratory

ESH-1 CONTROLLED DOCUMENT
(Uncontrolled document if not printed in red)

Users have the ultimate responsibility to ensure that they are working with the latest revision of the controlled document.

Copy Number
5

ESH-1 Procedure

Surveying for Alpha and/or Beta/Gamma Contamination

ESH-1-02-02.1

(DOCUMENT CONTROL NUMBER 002)

Effective Date: April 17, 199~~6~~5

1.0 INTRODUCTION

Alpha and beta/gamma contamination surveys are used to determine the presence of radioactive contamination on equipment and/or on surfaces of areas, buildings, and other Laboratory property. Identifying and quantifying contamination is essential to establish proper controls and protective clothing and posting requirements.

⇒ This procedure has been revised to incorporate parts in 10 CFR 835, Subpart E.

2.0 PURPOSE

This document describes the procedures that ESH-1 radiological control personnel must follow in conducting alpha and beta/gamma contamination surveys.

3.0 SCOPE

This procedure applies to all ESH-1 personnel who perform alpha and/or beta/gamma contamination surveys. The fixed contamination survey steps of this procedure may apply to the survey of volume contaminated materials. (For further guidance, refer to "Volume Contamination Surveying", LP 107-18.0 , and your ESH-1 team leader.) This document does not apply to tritium surveys.

4.0 DOCUMENT SPECIFIC DEFINITIONS

See ESH-1-01-05, "Master Glossary," for standardized definitions.

NuCon/DEFENSAP Smears - Typical smear media. NuCon is a trade name for a type of cloth smear of 1 3/4"-diameter. DEFENSAP is a trademark of Defense Apparel Corporation. In the context of this procedure, NuCon Smears refers to a 1 3/4"-diameter cloth smear with an adhesive backing in a folder.

5.0 RESPONSIBILITIES

RCTs and other appropriately trained and qualified personnel

- Perform alpha and/or beta/gamma contamination surveys in accordance with this procedure.
- Review RWPs or SCPs for survey requirements.

RCT supervision

- Ensure that contamination surveys are performed as required.
- Ensure that contamination surveys are performed by qualified personnel.
- Review survey documentation for completeness.

6.0 PRECAUTIONS AND LIMITATIONS

6.1 Personnel who perform contamination surveys must be aware of the consequences of not performing the surveys according to the requirements of this standard, including
- improper posting of contaminated areas,
- improper labeling of radioactive material,
- unauthorized exposure to personnel, and
- inadequate characterization of work place conditions.

6.2 Personnel who perform contamination surveys must be aware of sources and pathways for internal and external exposure and shall take appropriate precautions to minimize such exposure (such as wearing appropriate personal protective equipment {PPE} and dosimetry).

6.3 Documenting results, even if no contamination is detected, is critical. These documents become part of the Laboratory's permanent record of radiological conditions. The documentation must be carefully filled in with all requested information. Any pertinent special notes that would aid the reader to interpret the results or plan future actions should also be added.

6.4 Personnel who perform contamination surveys should be aware of other physical, chemical, biological and electrical hazards they may encounter.

7.0 PROCEDURE

7.1 General Requirements

⇒ 7.1.1 Alpha and/or beta/gamma contamination surveys shall be conducted to characterize work place conditions and to identify areas requiring posting as specified in "Radiological Posting", LS107-02.0. [10 CFR 835.401(b), 10 CFR 835.404(a)]

7.1.2 The RCT should review previous (latest available) area survey data before performing the contamination surveys.

NOTE: The surveys for fixed and removable contamination are often performed together. It is good practice to perform the direct frisk before the removable contamination survey.

7.2 Surveying for Fixed Contamination

7.2.1 Preparing for the survey
- Determine the area to be surveyed. Base this determination on guidelines from "Contamination Monitoring Standard," ESH-1-02-01.

- Select the proper type of instrument to be used for the type of radionuclide present. Refer to instrument-specific procedures for guidance.
- Prepare a survey map/form. If no standard survey map/form is available, have one prepared with sufficient detail to portray the location of survey points or any "hot spots" discovered during the survey.
- Conduct an operational check of the instruments in accordance with the applicable ESH-1 operational check procedures. ("Operational Checks of Beta/Gamma Survey Instruments", ESH-1-07-85; "Operational Checks of Alpha Survey Instruments", ESH-1-07-86)

7.2.2 Determining the area background

Using the appropriate alpha or beta/gamma count rate instrument, determine the area background as follows:

- The area background reading should be essentially zero with the alpha count rate instrument (scintillator-type alpha instruments with photomultiplier tubes are sensitive to gamma radiation.)
- For a beta/gamma count rate instrument, the area background reading should be <250 cpm.
- If the general alpha background is >50 cpm, or if the general beta/gamma background is >250 cpm, attempt to reduce the amount of radioactive material in the area or reduce the background radiation by turning off the source of radiation (if the background elevation is from a machine source), changing the probe, and/or using a shielded pancake probe.

7.2.3 Performing the alpha survey

- Hold the alpha probe within ~1/2 cm (1/4 inch) of the surface that is being monitored. To ensure that low-level fixed contamination will be detected, do not move the probe faster than 5 cm (2 inches) per second.
- When using an alpha instrument with a probe surface of <100 cm^2 and when the area of contamination is >100 cm^2, adjust the reading to correct for the actual probe surface when determining the dpm/100 cm^2. Most alpha probes have a detection surface of approximately 45 to 75 cm^2, and most count rate instruments are calibrated to display an efficiency of 50%.

Example: A direct reading on a Ludlum 139 (with an air proportional probe) of 1000 cpm would have an adjusted reading of ~3,300 dpm/100 cm^2:

$$\frac{1000 \text{ cpm}}{0.5 \text{ cpm/dpm}} \times \frac{100}{60 \text{ cm}^2} = 3{,}333 \text{ dpm/100 cm}^2$$

NOTE: Alpha probe surface areas depend on the specific model probe. Verify with ESH-1 supervision the actual probe surface area and correction factor to be used.

7.2.4 Performing the beta/gamma survey

- Hold the beta/gamma probe within ~1 cm (1/2 inch) of the surface that is being monitored.
- To ensure that low-level contamination will be detected, do not move the probe faster than 5 cm (2 inches) per second.
- When using a beta/gamma instrument with a probe surface of <100 cm^2 and when the area of contamination is >100 cm^2, adjust the reading to correct for the actual probe surface when determining the dpm/100 cm^2. Most pancake probes have a detection surface of 15.5 cm^2, or 15.5% of 100 cm^2, and most beta/gamma count rate instruments are calibrated to display an efficiency of 50%.

Example: A direct reading on an ESP/HP260 of 1000 cpm would have an adjusted reading of ~13,000 dpm/100 cm^2:

$$\frac{1000 \text{ cpm}}{0.5 \text{ cpm/dpm}} \times \frac{100}{15.5 \text{ cm}^2} = 12{,}903 \text{ dpm/100 cm}^2$$

NOTE: This formula applies to contamination uniformly distributed over a surface area that is >100 cm^2. For contamination that is not uniformly distributed or has a surface area of <100 cm^2, use the measured value corrected to dpm.

7.2.5 Recording Fixed Contamination Results

Record all fixed contamination levels or hot spots detected on the survey map/form, as well as the following information:

- names of personnel conducting the survey,
- date and time of survey,
- model, HSE number, and cal due date of the instrument(s), and
- any corrective action that was deemed necessary by the results of the survey.

NOTE: A formal inventory shall be maintained by ESH-1 of all areas of fixed contamination in accordance with Article 222 of the LANL Radiological Control Manual.

7.3 Surveying for Removable Contamination

7.3.1 Preparing for the survey

- Determine the number of smears/swipes to be taken.
- For routine surveys, obtain a survey map/form.
- Specify the number and location of the smears/swipes. If no standard survey map/form is available, have one prepared with enough detail to show the location of the survey points. Refer to "Contamination Monitoring Standard."

ESH-1-02-01, for information on determining the locations and number of survey points required.

- Determine which smear survey media you will use. **If you plan to use the *standard* NuCon smear survey media and only a few smears are required,** label the smear folder with the following information:
  - -smear/swipe number,
  - -date and time,
  - -location,
  - -name of technician, and
  - -type of radiation to be counted.
- Place the completed folders in numerical order in a small plastic bag.

NOTE: For larger surveys involving greater numbers of smears, the only requirements are to number the smear folder and complete an ESH-1 Smear Survey Form.

- **If you plan to use *nonstandard* smear survey media,** provide identification, all required information, and take proper precautions to avoid cross-contamination.

Suggested method: Place the smear/swipe media for each survey point in a separate small plastic bag and tape a completed NuCon folder on the outside of each bag.

- Collect the supplies you will need to conduct the survey.
  - -protective clothing (anti-Cs)
  - -gloves
  - -plastic bags
  - -any other necessary items.
- Prepared or Random Survey Points
  - -If you use a prepared survey map/form:
    - take the smears/swipes in an established sequence to minimize unnecessary movement
    - label each smear/swipe location with the corresponding smear/swipe number.
  - -If you take the survey points at random and do not use a prepared map/form:
    - write an exact description of each location when you smear/swipe it,
    - insert your written description in the appropriate NuCon folder.
    - Proceed to the area or facility where you will conduct the survey and put on the protective clothing required for entry. The kind of protective clothing that is required will be posted at the entrance to the area.

7.3.2 Performing Smear Surveys

CAUTION: Do not put used smears in the same bag with unused smears. Place the used smears in a separate bag to avoid accidental use of a smear in two locations and cross-contamination of unused smears.

Using NuCon media:

- open the folder, press the smear media against the surface to be surveyed, and, with moderate pressure, rub an area ~100 cm^2 (about the same area as a dollar bill),
- close the smear folder and place it in the small plastic bag that you have prepared.

NOTE: Do not allow the smears to become cross-contaminated. Closing the smear folder usually prevents cross-contamination. However, if you suspect that the area is highly contaminated in some places or the contamination is very loose or fine, use an individual plastic bag for each smear folder.

If you are taking the survey with nonstandard smear/swipe media;

- with moderate pressure, rub the media against the surface to be surveyed over an area of 100 cm^2 for a smear and >1000 cm^2 for a swipe,
- package each smear/swipe separately in a small plastic bag, and
- identify each smear/swipe in the same manner that the NuCon smears were identified.

7.3.4 Determining Surface Area

It may be necessary to further quantify contamination levels based on nonstandard surface areas.

If the surface of the area is <100 cm^2 for a smear or is <1000 cm^2 for a swipe, estimate the actual size of the area smeared/swiped and include this information with the other smear/swipe identification data. This value will be converted to a percentage and used along with the counting instrument's efficiency value to obtain final dpm/100 cm^2 or dpm/1000 cm^2.

Example: A 10-cm^2 smear reading 1000 cpm on a counting instrument with 40% efficiency would have an activity of 25,000 dpm/100 cm^2:

$$\frac{1000 \text{ cpm}}{0.4 \text{ cpm/dpm}} \times \frac{100 \text{ cm}^2}{10 \text{ cm}^2} = 25{,}000 \text{ dpm/100 cm}^2$$

7.3.5 Sample analysis

- Before sending the smears to HPAL for analysis, screen the samples using an alpha and/or beta/gamma survey instrument. Use 20,000 dpm alpha and 100,000 dpm beta/gamma as the decision criteria. The criteria for

alpha and beta/gamma apply independently. Notify HPAL before sending them samples that exceed these levels.

- Complete an HPAL Submittal Form for the batch of smear/swipe samples being sent to the count laboratory.
- Package and transport the smears and swipes in accordance with "Packaging, Transporting, Storing, Controlling, and Handling of Radioactive Material and Radioactive Waste", ESH-1-14-01.
- File the ESH-1 Smear Survey Form until smear results are returned from HPAL.
- Forward the samples to HPAL for counting.
- When the results are received from HPAL, staple the ESH-1 Smear Survey Form to the HPAL results with matching sample tracking numbers.
- Original results shall be filed as directed by the team leader.
- RCT supervision shall review the results for completeness.
- The RCT shall update the existing posting to reflect latest survey results and notify operating group personnel of survey results, especially smears with activity greater than the expected range, and any posting changes made.
- Special Smear Analysis
  - -The RCT supervision may direct local analysis for "special" smears, such as those for area or equipment release.
  - -Follow instrument-specific procedures for counting equipment.

NOTE: The analytical results data sheet returned from the count laboratory shall be traceable to the instrumentation used at the count laboratory and the personnel performing the analysis.

8.0 REQUIRED RECORDS

Required records are the

- ESH-1 Smear Survey Form
- HPAL Submittal Form

Copies of the complete survey shall be sent to the appropriate ESH-1 team leader and should be made available to the appropriate facility operating group personnel. Additional copies should be retained by the RCT and posted near entrances to the areas of concern.

9.0 REFERENCES

LANL Radiological Control Manual, LM107-01.1
10 CFR 835, "Occupational Radiation Protection"
"Master Glossary," ESH-1-01-05
"Contamination Monitoring Standard," ESH-1-02-01
"Packaging, Transporting, Storing, Controlling, and Handling of Radioactive Material and Radioactive Waste," ESH-1-14-01

10.0 ATTACHMENTS

NONE

7.5.11 Press "RESET" to start another background count or "ON/OFF" to turn off the instrument.

7.6 Battery Replacement

CAUTION: Do not open the instrument case in an area controlled for contamination.

7.6.1 If the batteries need to be replaced, perform the following steps.

NOTE: Routine battery replacement is normally performed by ESH-4. In those situations where an instrument has dead batteries and no other appropriate instrument is available, the RCT in the field may replace the batteries in accordance with this procedure.

7.6.2 Ensure the meter is "OFF."

7.6.3 Turn the instrument upside down and remove the large screw in the center of the bottom cover with a screw driver.

7.6.4 Remove the bottom cover.

7.6.5 Replace the six 'C' cell batteries with fresh batteries. The inside of the instrument case is marked with the correct battery polarity.

7.6.6 Replace the bottom cover and screw the large screw back in and go to section 7.1 Prerequisites

7.7 Instrument Maintenance

CAUTION: Instrument maintenance to be performed by the RCT is limited to the actions stated in this section. Do not adjust calibration or controls not specifically stated in this procedure.

⇒ 7.7.1 If the instrument is due for calibration or if the meter (not the detector or cable) has visible damage that would prevent it from operating acceptably, survey and tag it for return to RIP.[10 CFR 835.401(c)(1)]

NOTE: The HP260/HP360 probe holder should be surveyed as part of the instrument release survey because the potential exists for contamination of the probe handle and the probe holder.

7.7.2 If the detector cable is defective, perform the following steps.

7.5 Surveying with the ESP/HP260/HP360 in the Scaler Mode

7.5.1 Press "ON/OFF" to turn the instrument on.

7.5.2 Press "MODE." The display shows "SCALER MODE?"
"+ = USE/ - = NO"

7.5.3 Press "+." The display shows "UNITS = cnt"
"+ = USE/ - = NO"

7.5.4 Press "+." The display shows "UNITS = cnt"
"ALM AT x.xx + xx"

7.5.5 If you want to change the alarm set point for the scaler mode, then hold down "RESET" while pressing "+" to increase the alarm set point, or while pressing "-" to decrease the alarm set point.

NOTE: The rate of change of the alarm set point increases the longer the "+" or "-" switches are held down.

NOTE: The alarm set point is determined by the release criteria. Refer to "Releasing Materials and Equipment," LP107-04, for release criteria.

7.5.6 Press "+." The display shows "UNITS = cnt"
"CNT FOR x:xx:xx"

7.5.7 If you want to change the count time for the scaler mode, then hold down "RESET" while pressing "+" to increase the count time (which is in minutes) or while pressing "-" to decrease the count time.

7.5.8 Press "+." The display shows
"CNT FOR 0:01:00" (or the count time just set)
"RESET TO START"

7.5.9 Hold the probe directly over and within ½ inch of the surface to be surveyed while in the scaler mode.

7.5.10 Press "RESET." The display shows
"0:00:59 LEFT" (or the remaining count time)
"1.49 + 02 cnt" (display shows the actual total count).

NOTE: At the end of the count time the display shows
"CNT FOR 0:1:00" (or the actual total count time)
"1.50 + 02 cnt" (display shows the actual total count).
Divide the total count by the count time (in minutes) to obtain the background count rate in cpm.

ESH-1 CONTROLLED DOCUMENT APPROVAL SHEET

SURVEYING FOR ALPHA AND/OR BETA/GAMMA CONTAMINATION
ESH-1-02-02, REVISION 1

APPROVALS

Approved by: Sean Dawson for W.F. Eisele **Date:** 3-22-95
William F. Eisele
ESH-12, Policy and Documentation Team Leader

Approved by: _____ **Date:** 3-28-95
J. Lee McAtee
ESH-1 Group Leader

Approved by: _____ **Date:** 3/29/95
Joseph M. Graf
Radiological Control Manager

Effective Date: April 17, 1995

Note: Refer to ESH-1 procedure ESH-1-01-01, "Preparing, Reviewing, and Revising ESH-1 Documents."

Los Alamos
National Laboratory

ESH-1 CONTROLLED DOCUMENT
(Uncontrolled document if not printed in red)

Users have the ultimate responsibility to ensure that they are working with the latest revision of the controlled document.

Copy Number
5

ESH-1 Procedure

Operating the Eberline ESP/Pancake Probe

ESH-1-07-04.1

(DOCUMENT CONTROL NUMBER 016)

Effective Date: March 15, 1996

ESH-1 CONTROLLED DOCUMENT APPROVAL SHEET

OPERATING THE EBERLINE ESP/PANCAKE PROBE

ESH-1-07-04 REV 1

APPROVALS

Approved by: Jean Dawson **Date:** 2-28-96

Jean Dawson
ESH-12, RMDCC

Approved by: [illegible] **Date** 2-28-96

Roger Huchton
ESH-1 Acting Group Leader

Approved by: J. M. Graf **Date** 2/26/96

Joseph M. Graf
Radiation Protection Program Manager

Effective Date:
March 15, 1996

Note: Refer to ESH-1 procedure ESH-1-01-01, "Preparing, Reviewing, and Revising ESH-1 Documents."

1.0 INTRODUCTION

⇒ The Eberline ESP/pancake probe consists of a microcomputer-based portable radiation survey instrument (Eberline Smart Portable, ESP) and a "pancake" Geiger Mueller (GM) tube (Hand Probe, HP260/HP360) with a thin mica window. The thin mica window, which is protected by a sturdy wire screen, permits the useful detection of beta radiation of energies as low as 40 KeV. [10 CFR 835.401(c)(2)]

This procedure has been revised to incorporate applicable parts of 10 CFR 835, "Occupational Radiation Protection."

2.0 PURPOSE

This procedure provides guidance in the proper operation of the Eberline ESP/pancake Beta/Gamma survey meter.

3.0 SCOPE

This procedure applies to ESH-1 personnel who operate the Eberline ESP/pancake probe. The instrument may be used to perform a direct frisk of personnel, equipment or areas, or may be used to monitor swipes/smears.

4.0 DOCUMENT SPECIFIC DEFINITIONS

See "Master Glossary," ESH-1-01-05, for standardized definitions.

Count rate mode: In the context of this procedure, count rate mode refers to using the ESP/HP260/HP360 in a rapid response manner. The display indicates counts per minute in this mode and is the typical mode of operation.

Scaler mode: In the context of this procedure, scaler mode refers to using the ESP/HP260/HP360 in a timed count manner while holding the probe still. The count time is set by the user for ten minutes (as an example) and the counts are collected for that ten minutes. Dividing the counts by the time gives the cpm. The scaler mode is useful in determining lower levels of activity.

5.0 RESPONSIBILITIES

Radiological Control Technicians (RCTs) and other appropriately trained and qualified individuals

- Operate the Eberline ESP/HP260/HP360 in accordance with the requirements of this procedure.
- Report any abnormalities encountered during instrument performance testing and/or operation to RCT supervision.

- Ensure that instruments are returned to the ESH-4 Radiation Instrument Pool (RIP) for routine calibration, preventive maintenance and/or corrective maintenance.

RCT supervision

Ensure that RCTs follow this procedure.

6.0 PRECAUTIONS AND LIMITATIONS

6.1 The HP260/HP360 window is protected by a wire screen. Reasonable care should be taken to avoid poking the window with sharp objects.

6.2 A faulty detector cable may cause false readings when the cable is moved.

6.3 The HP260/HP360 probe will respond to alpha particles of energies above 3 MeV.

6.4 High voltages exist in the instrument whenever it is on. Always turn the instrument off before opening the case or removing or replacing detectors or cables.

6.5 The potential for contamination of the HP260/HP360 probe holder exists. The probe holder should be surveyed during the instrument release survey.

7.0 PROCEDURAL STEPS

7.1 Prerequisites

⇒ 7.1.1 Verify that the instrument is in calibration by inspecting the calibration sticker on the instrument.[10 CFR 835.401(c)(1)]

NOTE: If the instrument is due for calibration, remove it from service and go to section 7.7, Instrument Maintenance.

7.1.2 Inspect the instrument and detector for evidence of mechanical or electrical defects (such as broken detector mylar, loose electrical connections, or dents in the instrument case).

NOTE: If the instrument has visible defects that would prevent it from operating acceptably, remove it from service and go to section 7.7 Instrument Maintenance.

7.1.3 Turn the instrument on by pressing the "ON/OFF" switch.

7.1.4 If the first character of the display is blinking, or if the display does not come on, the batteries need to be replaced. If the display indicates anything other than "CNT/MIN" (counts per minute), remove the instrument from service and go to section 7.7, Instrument Maintenance.

7.1.5 Press "RESET"; the bar graph and the numerical indication of the count rate should be displayed. Perform the following steps:

1) Observe the count rate which should typically be between 150 and 250 cpm. (The display would show *1.50 ÷ 02* to *2.50 ÷ 02 cnt/min.*)

2) Move the probe around as you would in surveying. If the count rate changes greatly, it may be an indication of a faulty detector cable.

3) If the count rate is significantly lower or higher than in step 1 or if the count rate changes drastically to the extent that it would prevent you from conducting the survey, go to section 7.7, Instrument Maintenance.

7.1.6 Press "SPKR," and listen for an audible indication (clicking sounds) that the instrument is detecting "events."

⇒ 7.1.7 Refer to "Operational Checks of Beta/Gamma Survey Instruments." ESH-1-07-85, for the required instrument operational checks. [10 CFR 835.401(c)(4)]

7.1.8 Press "ON/OFF" to turn the instrument off.

7.2 Determining the Area Background with the Eberline ESP/HP260/HP360

7.2.1 Press "ON/OFF" to turn the instrument on.

7.2.2 Press "MODE." The display shows "SCALER MODE?"
"÷ = USE/ - = NO"

7.2.3 Press "÷." The display shows "UNITS = cnt"
"÷ = USE/ - = NO"

7.2.4 Press "÷." The display shows "UNITS = cnt"
"ALM AT x.xx ÷ xx"
(where x is a number)

7.2.5 Press "÷." The display shows "UNITS = cnt"
"CNT FOR x:xx:xx"

7.2.6 If you want to change the count time for the scaler mode, then hold down "RESET" while pressing "+" to increase the count time (which is in minutes) or while pressing "-" to decrease the count time.

NOTE: The rate of change of the count time increases the longer the "+" or "-" switches are held down.

7.2.7 Press "+." The display shows
"CNT FOR 0:01:00" (or the count time just set)
"RESET TO START."

7.2.8 Press "RESET." The display shows
"0:00:59 LEFT" (or the remaining count time)
"1.49 + 02 cnt" (display shows the actual total count).

NOTE: At the end of the count time the display shows
"CNT FOR 0:1:00" (or the actual total count time)
"1.50 + 02 cnt" (display shows the actual total count).
Divide the total count by the count time (in minutes) to obtain the background count rate in cpm.

7.2.9 If the area background count rate is greater than 500 cpm, the equipment or item to be surveyed should be moved to an area of lower background or the source of interfering radiation should be removed.

NOTE: If the equipment or item cannot be moved or if the background count rate cannot be lowered, consult with ESH-1 supervision.

7.2.10 Press "RESET" to start another background count or "ON/OFF" to turn off the instrument.

7.3 **Determining Minimum Detectable Count Rate (MDCR) and Minimum Detectable**
⇒ **Activity (MDA)**

7.3.1 Perform an area background count in accordance with section 7.2.

7.3.2 Record the background count rate in cpm on the survey form.

7.3.3 Calculate the minimum detectable count rate (MDCR) by using the following formula.

$$MDCR = R_b + 3.29\sqrt{R_b}$$

(MDCR equals background count rate plus 3.29 times the square root of the background count rate.)

NOTE: This calculation is for the 95 % confidence level.

7.3.4 Calculate the minimum detectable activity (MDA) in DPM by multiplying the MDCR by the calibration correction factor (typically 2 for this instrument). [10 CFR 335.404(a)]

7.4 Operating the ESP/HP260/HP360 in the Count Rate Mode

7.4.1 The Eberline ESP/HP260/HP360 may be used to perform a direct frisk of personnel, equipment or areas, or may be used to monitor swipes/smears.

7.4.2 Press "ON/OFF" to turn the ESP on.

NOTE: The "RESET" switch provides a rapid means of resetting the meter to zero after a reading has been taken and recorded.

7.4.3 Press "MODE." The display shows "SCALER MODE?"
"+ = USE/ - = NO"

7.4.4 Press "-." The display shows
"ALM AT x.xx +xx" (display shows the actual set point)
"1.51 + 02 cnt/min" (display shows the actual count rate).

7.4.5 If you want to change the alarm set point for the count rate mode, then hold down "RESET" while pressing "+" to increase the alarm set point or while pressing "-" to decrease the alarm set point.

NOTE: The rate of change of the alarm set point increases the longer the "+" or "-" switches are held down.

NOTE: The alarm set point is determined by the release criteria. Refer to "Releasing Materials and Equipment," LP107-04, for release criteria.

7.4.6 Press "MODE." The display shows the bar graph and the numerical indication of the count rate.

7.4.7 Press "SPKR" to turn the speaker on.

7.4.8 Listen to the speaker and observe the meter for an indication of the average background count rate.

⇒ 7.4.9 If performing a direct frisk, hold the detector within ½ inch of the surface to be surveyed and move the detector across the surface to be surveyed at less than or equal to 2 inches per second. If a positive response above background is noted (an increase in clicking rate or the numerical or bar graph display), stop the frisk and monitor the affected area for about 30 seconds or until meter response has stabilized.[10 CFR 835.404(a)]

NOTE: The HP260/HP360 will respond to alpha particles of energies above 3 MeV with an efficiency much lower than its efficiency for typical beta particles. If interference by alpha particles is suspected, a piece of paper held between the detector and the source of radiation will stop any alpha particles while having minimal effect on most beta particles.

NOTE: Pressing the "+" key temporarily places the meter into a slower response mode, which also allows a more precise count.

NOTE: Do not allow the probe to come into direct contact with the surface being surveyed to prevent contamination and damage to the probe.

7.4.10 If screening swipes/smears or filters prior to analysis, hold the detector within ½ inch of the sample media and wait for a meter response. Monitor for about 10 seconds; if no increase in count rate is noted, move to the next sample. If an increase in count rate is noted, monitor for about 30 seconds or until meter response has stabilized.

7.4.11 Compare the meter readings with the MDCR determined in section 7.3.

7.4.12 If the meter reading is less than the MDCR determined in section 7.3, record it as < MDA on the survey record, or NDA (no detectable activity).

7.4.13 If the meter reading is greater than the MDCR, then subtract the background from the meter reading. This is the net CPM (counts per minute) to be used in the calculation for DPM/100 cm^2 or DPM per probe area.

⇒ 7.4.14 The conduct of surveys, the conversion of survey data to dpm and the recording of survey results shall be performed in accordance with "Contamination Monitoring Standard," ESH-1-02-01, and "Surveying for Alpha and/or Beta/Gamma Contamination," ESH-1-02-02.[10 CFR 835.404(a)]

7.4.15 When instrument use is complete, press the "ON/OFF" switch to turn the instrument off.

7.5 Surveying with the ESP/HP260/HP360 in the Scaler Mode

7.5.1 Press "ON/OFF" to turn the instrument on.

7.5.2 Press "MODE." The display shows "SCALER MODE?"
"+ = USE/ - = NO"

7.5.3 Press "+." The display shows "UNITS = cnt"
"+ = USE/ - = NO"

7.5.4 Press "+." The display shows "UNITS = cnt"
"ALM AT x.xx + xx"

7.5.5 If you want to change the alarm set point for the scaler mode, then hold down "RESET" while pressing "+" to increase the alarm set point, or while pressing "-" to decrease the alarm set point.

NOTE: The rate of change of the alarm set point increases the longer the "+" or "-" switches are held down.

NOTE: The alarm set point is determined by the release criteria. Refer to "Releasing Materials and Equipment," LP107-04, for release criteria.

7.5.6 Press "+." The display shows "UNITS = cnt"
"CNT FOR x:xx:xx"

7.5.7 If you want to change the count time for the scaler mode, then hold down "RESET" while pressing "+" to increase the count time (which is in minutes) or while pressing "-" to decrease the count time.

7.5.8 Press "+." The display shows
"CNT FOR 0:01:00" (or the count time just set)
"RESET TO START"

7.5.9 Hold the probe directly over and within ½ inch of the surface to be surveyed while in the scaler mode.

7.5.10 Press "RESET." The display shows
"0:00:59 LEFT" (or the remaining count time)
"1.49 + 02 cnt" (display shows the actual total count).

NOTE: At the end of the count time the display shows
"CNT FOR 0:1:00" (or the actual total count time)
"1.50 + 02 cnt" (display shows the actual total count).
Divide the total count by the count time (in minutes) to obtain the background count rate in cpm.

7.5.11 Press "RESET" to start another background count or "ON/OFF" to turn off the instrument.

7.6 Battery Replacement

CAUTION: Do not open the instrument case in an area controlled for contamination.

7.6.1 If the batteries need to be replaced, perform the following steps.

NOTE: Routine battery replacement is normally performed by ESH-4. In those situations where an instrument has dead batteries and no other appropriate instrument is available, the RCT in the field may replace the batteries in accordance with this procedure.

7.6.2 Ensure the meter is "OFF."

7.6.3 Turn the instrument upside down and remove the large screw in the center of the bottom cover with a screw driver.

7.6.4 Remove the bottom cover.

7.6.5 Replace the six 'C' cell batteries with fresh batteries. The inside of the instrument case is marked with the correct battery polarity.

7.6.6 Replace the bottom cover and screw the large screw back in and go to section 7.1 Prerequisites

7.7 Instrument Maintenance

CAUTION: Instrument maintenance to be performed by the RCT is limited to the actions stated in this section. Do not adjust calibration or controls not specifically stated in this procedure.

⇒ 7.7.1 If the instrument is due for calibration or if the meter (not the detector or cable) has visible damage that would prevent it from operating acceptably, survey and tag it for return to RIP. [10 CFR 835.401(c)(1)]

NOTE: The HP260/HP360 probe holder should be surveyed as part of the instrument release survey because the potential exists for contamination of the probe handle and the probe holder.

7.7.2 If the detector cable is defective, perform the following steps.

1) Ensure the meter is "OFF."

2) Detach the cable from both the detector and meter ends.

CAUTION: The two connector ends on the cable are not identical. The connector end with the protruding longer white insulator connects to the ESP. Do not force the connectors to go together.

3) Replace the defective cable with a good cable of the same type and length and go to section 7.1, Prerequisites.

7.7.3 If the cable needs to be returned to RIP, survey and tag it for return.

8.0 REQUIRED RECORDS

None

9.0 REFERENCES

LANL Radiological Control Manual, LM107-01
"Releasing Materials and Equipment," LP107-04
"Contamination Monitoring Standard," ESH-1-02-01
"Surveying for Alpha and/or Beta/Gamma Contamination," ESH-1-02-02
"Operational Checks of Beta/Gamma Survey Instruments," ESH-1-07-85
Eberline Model ESP (Eberline Smart Portable) Technical Manual
"Eberline ESP-1 Survey Meter with the Model HP-260 GM Pancake Probe," ESH4-RIC-TED-003, RO

10.0 ATTACHMENTS

NONE

Measurement of Gamma-Ray Fields Using A Sodium Iodide Detector

1.0 PURPOSE

This procedure provides instructions for making count-rate measurements of gamma-ray fields with a sodium iodide (NaI) detector.

2.0 SCOPE

This procedure includes activities required to conduct a radiation survey to quantitatively measure low-level gamma emitters.

2.1 Applicability

This procedure applies to site workers who will be conducting the field radiation survey.

2.2 Training

Site workers conducting the radiation survey will be trained health physicists or health physics technicians (or have equivalent education or experience).

3.0 DEFINITIONS

A. Gamma rays: highly penetrating forms of radiation. As they penetrate the body, gamma rays can damage living cells, and are therefore, considered an external hazard.

B. Radioactivity: the physical property, or capability, of certain elements to release particles or waves of energy. As radioactive elements disintegrate, they exhibit radioactivity by emitting gamma rays and other particles and radiation.

4.0 BACKGROUND AND/OR CAUTIONS

This radiation survey is used to quantitatively measure gamma rays from radionuclides in the area. It may be used to indicate contamination by gamma emitters after the entire area is surveyed and mapped to define radioactive hot spots or plumes. The NaI detector is used primarily to measure increases in background radiation and to locate and measure sources of radiation that cause the background readings to change. Note that elevated count-rate data must be carefully interpreted because uncontaminated areas can demonstrate high readings if they are next to an area contaminated with gamma emitters.

5.0 EQUIPMENT

Equipment and supplies to be used are listed below.

Portable ratemeter/scaler and sodium iodide detector (1 inch by 1 inch)

D-cell batteries

Gamma check source

6.0 PROCEDURE

PRIOR TO MEASUREMENTS

A. Refer to the operator's manual for specific instructions on the operation of the NaI detector.

B. Inspect the equipment and connector cable (where appropriate) for obvious damage or a frayed or broken cable.

C. Check the battery condition and if the check indicates low battery power, replace the batteries.

D. Check the calibration sticker and ensure that the instrument has been calibrated within the NaI detector specific time frame (e.g., every 6 months for a Ludlum 12S NaI Detector).

E. Perform a source check and note the response of the detector .

GENERAL OPERATING PROCEDURE

A. To survey radiation levels in an area, walk slowly, listen for increases in audible response, and look for needle deflection indicating an increase in radiation levels. In general, the instrument should be held approximately 3 feet above the ground (waist level). To determine the maximum radiation levels, vary the height and direction of the detector. When an increase is noted, hold the instrument at that point for at least 15 seconds (or as long as indicated in the operations manual for specific models) to obtain an accurate count rate.

B. To obtain a contact reading of an object or surface, place the instrument directly on the object or surface and hold for at least 15 seconds (or as long as indicated in the operations manual for specific models) to obtain an accurate count rate. If the object or surface is known or suspected to have loose contamination, exercise good radioactive contamination safety practices, and do not allow the instrument to come in contact with the surface.

C. When scanning an object with the instrument , scan at 1-2 inches per second (or as quickly as indicated in the operations manual for specific models).

D. Give particular attention to drain lines, piping, ductwork, pits, sumps, or any other likely places where radioactivity may be present.

E. Record all field survey point readings and other relevant data.

F. If necessary, ensure that all survey and sample locations are properly staked with a visible location identification.

G. At the end of field activities, ensure that all equipment is accounted for, decontaminated, and ready for shipment.

7.0 REFERENCES

A. The Ludlum 12S Radiac Training Guide. Prepared by Afftrex, LTD. Pittsburgh, PA.

B. Instruction Manual for the Ludlum 12S Sodium Iodide Detector. Ludlum Measurements, Inc. Sweetwater, TX.

8.0 RECORDS

All records generated as a result of this procedure will be submitted to the Record Processing Facility. These records include but are not limited to:

Daily Activity Log which will include all daily activities and any deviations from this procedure.

9.0 ATTACHMENTS

N/A

Field Monitoring for Surface and Volume Radioactivity Levels

1.0 PURPOSE

This procedure describes the process of monitoring potentially contaminated equipment and materials, including waste, by use of both field counting of smear survey samples for removable contamination and direct field surveys for fixed (and/or total) contamination. Specifically, it allows waste management personnel to determine the levels of surface and bulk (volume) radioactive contamination for the potential release of non-radioactively contaminated material for public landfill disposal or beneficial use in accordance with Laboratory Procedure LP107-04.1, "Releasing Materials and Equipment" (LANL 1995). The main criteria for determining these levels are the decision amount (DA) and the minimum detectable activity (MDA) (see Section 4.1).

2.0 SCOPE

2.1 Applicability

This procedure applies to the use of field instruments for determining radioactive contamination in Environmental Restoration (ER) Project wastes at Los Alamos National Laboratory (Laboratory). It is applicable to the requirements of Sections 7.2.2 and 7.2.3 of LS105-05.0, 7-1-96 (LANL 1996). These wastes include those generated during Resource Conservation and Recovery Act (RCRA) Facility Investigations, RCRA closures, corrective actions, and decommissioning.

Field screening may not be appropriate for sites whose radioactive materials content has not been adequately characterized, or where the contaminant is a pure alpha or beta emitter. Laboratory analyses may not be feasible for characterizing certain items, such as the interior of liquid drum samplers or plastic tubing used to convey groundwater during the purging, sampling, or development of monitoring wells. These types of items may be characterized as non-radioactive by using site sample results or process knowledge. Documentation of these data used for "free or conditional" release shall be in accordance with LP107-04.1, "Releasing Materials and Equipment."

2.2 Training

The Field Project Leader (FPL) or equivalent is responsible for ensuring proper implementation of this procedure. The FPL also must ensure that he or she and all Radiological Control Technicians document that they read and understand this procedure, the other applicable procedures in Section 1.0, General Instructions, of the ER Standard Operating Procedures, and the associated LANL Radiation Protection Program Documents.

An RCT certified by the Laboratory and the Laboratory Health Physics Operations Group (ESH-1) must make the radioactivity determinations described in this procedure. The RCT must meet the qualification requirements specified in the LANL Radiological Control (RadCon) Manual, Chapter 6, Part 4, Paragraph 641 through 645 (LANL 1994b).

3.0 DEFINITIONS AND ACRONYMS

Background: Radiation from radioactive material other than that resulting from US Department of Energy (DOE) operations at the Laboratory. Background radiation includes radiation from cosmic rays and from naturally occurring radioactive materials in the earth and building materials, including radon (except as a decay product of source or special nuclear material) and global fallout as it exists in the environment from the testing of nuclear explosive devices (DOE/AL 1993). Background is determined using statistically sound methods of sampling and sample counting so as to duplicate the soil or material type of the suspected contaminated material but without including the actual suspected contaminated soil/material (see Section 6.1).

Decision amount (DA): The activity level above which the material being measured is considered "radioactive" at the 95% confidence level (Brodsky 1991).

Minimum detectable activity (MDA): The amount of activity that would be present in a sample to give a count less than the DA only 5% of the time, for a specific instrument (Brodsky 1991).

Surface contamination: Contamination found solely on the surface of, rather than throughout, the subject material.

- Fixed. Contamination that can only be removed from surfaces by destructive means (such as grinding or chipping).

- Removable. Radioactive material that can be removed from surfaces by nondestructive means, such as casual contact, wiping, brushing, or washing.

Volume contamination: Radioactive contamination dispersed throughout a matrix in excess of the appropriate release criteria. Examples of volume contamination are contaminated liquids and soils, materials activated by irradiation (for example, beams of charged particles), and smelted metals (where the smelting process incorporates radioactive material into the matrix of the metal).

4.0 BACKGROUND INFORMATION AND/OR CAUTIONS

4.1 Determining Radioactivity Level

DOE defines waste as nonradioactive if it contains no measurable increase in radioactivity above background (at a statistically defined confidence interval) in volume or bulk resulting from DOE operations at the Laboratory and contains no surface radioactivity above the limits specified in "Application of DOE 5400.5 Requirements for Release and Control of Property Containing Residual Radioactive Material," DOE Memorandum, 11-17-95 (DOE 1995) (see Attachment B). Therefore, bulk- or volume-contaminated wastes will be classified as radioactive if the wastes are statistically above applicable background levels. Surface-contaminated wastes will be classified as radioactive in accordance with LP107-04.1.

Deciding whether waste or other material is contaminated with radioactivity requires that radiation detection instruments be used to determine the background count in the vicinity of the waste or other material. This count must then be compared with the count of a sample of the material in question. The sample count must have a certain value above the background count in order to be called "radioactive" with an agreed-upon degree of certainty or confidence that the result is correct. This value is called the decision amount (DA) (Brodsky 1991). Likewise, if the sample count is less than this certain value, it is called "nonradioactive" (or "at background") with the same degree of confidence.

The DA is the smallest measure of radioactivity or the level closest to background with which a decision of contamination can be made at an acceptable confidence level of 95%. This means that the DA is the amount of activity that would give an average count *greater* than the DA value only 5% of the time (see Attachment A, Type I error).

The DA does not indicate how much activity would have to be in the sample to give a count *less* than the DA only 5% of the time (which is assuming something is not there when it is there). This leads to the use of the minimum detectable activity (MDA), which is an amount of activity in a sample that will be called *greater* than the DA 95% of the time. This leaves only a 5% chance that the activity would count *less* than the DA and would be called background (see Attachment A, Type II error).

4.1.1 Surface Contamination

DOE allows the release of material and equipment for unrestricted use if the items have surface contamination below specific levels listed in DOE Order 5400.5, Fig. IV-1, (DOE 1990) as modified by the US Atomic Energy Commission Regulatory Guide 1.86 (AEC 1974) and DOE Memorandum, Application of DOE 5400.5 Requirements for Release and Control of Property Containing Residual Radioactive Material, November 17, 1995 (DOE 1995) (see Attachment B). This approach will be applied to potentially surface-

contaminated ER Project wastes. The wastes will be classified as radioactive if the wastes are above the criteria as specified in LP107-04.1. The wastes will be classified as "uncontaminated" (and can be considered nonradioactive) if the wastes are below the DOE criteria.

The decision of whether a smear sample or a direct measurement of a surface is contaminated is based on a comparison of the relative counts obtained on the instrument with background and blank sample count rates (Attachment A). The level of radioactivity at which this decision is made must be below the contamination guidelines shown in Attachment B so that material may be released for unrestricted use with a high degree of confidence that it is not contaminated. If a smear sample or direct measurement indicates contamination, it will not be judged as uncontaminated with the same degree of confidence. This decision level is defined in this procedure as the MDA of each instrument used to measure the type of radiation emitted by the isotopes in question.

To determine if surface-contaminated wastes are radioactive, the MDA must be calculated and the counting times adjusted to ensure that the instrument is capable of detecting radioactivity at levels less than the amounts in Attachment B with a high degree of confidence. This determination is based upon measurements taken with a field instrument having a standard MDA at the 95% confidence interval below the levels required by the table in Attachment B.

4.1.2 Bulk or Volume Contamination

For potentially contaminated bulk waste, other than concrete or masonry, that can readily be sampled (such as soil), a known sample of uncontaminated material is counted with a geometry identical to that of the sample in question. The background must be determined in a noncontaminated location at the site or by using a noncontaminated soil or other waste sample taken from the site. (See Section 6.1.) The MDA must then be calculated and the counting times adjusted to ensure that the instrument is capable of detecting radioactivity at levels less than the amounts in Attachment B with a high degree of confidence. This determination is based upon measurements taken with a field instrument having a standard MDA at the 95% confidence interval below the levels required by the table in Attachment B. The radioactivity status is determined by calculating the MDA using the counts measured with a radiation survey meter. If the radioactivity levels are above the MDA, the wastes will be classified as radioactive.

For concrete and masonry block determinations, the background and the radioactivity status are determined as described in Sections 6.1.2 and 6.4. A background survey shall be performed to determine the concentrations of naturally occurring radioactive material in concrete and masonry block building debris generated by a particular demolition project. Because guidelines for residual radioactivity at decommissioned sites are presented in terms of activity levels above normal background, background

determinations are necessary. Background measurements shall be taken on concrete/masonry block debris taken from unaffected areas of a particular site that have no history of radioactive material use.

5.0 EQUIPMENT

5.1 Counting Equipment for α-β Surface Smear Samples for Determining Removable Surface Contamination Levels

- Ludlum Model 2929 α-β Sample Counter (with attached Model 43-10-1 α-β sample counter) or the equivalent.

5.2 Survey Equipment for Measuring Direct α-β Surface Contamination Levels

- Ludlum Model 12 Survey Meter w/ Model 43-5 or 43-90 Alpha Scintillator or equivalent (for α contamination) or Model 44-9 α-β pancake detector or equivalent (for β-γ contamination).

5.3 Survey Equipment for Soil or Other Material Suspected of Plutonium or Americium Contamination

- Ludlum Model 2221 Scaler/Ratemeter (or the equivalent) used with Teledyne Isotopes NaI(Tl) FIDLER detector (or equivalent)

5.4 Survey Equipment for Other Gamma-Ray Radionuclide Contaminants

- Ludlum Model 2221 Scaler/Ratemeter with Model 44-10 2x2 Gamma Scintillator.
- Ludlum Model 19 MicroR Meter

6.0 PROCEDURE

6.1 Determination of Background Radioactivity

6.1.1 Smear and Direct Surface Contamination

To be performed in accordance with Procedure LP107-04.1.

A. Prepare blank smear samples by smearing known noncontaminated items and counting in the smear counter for α or β or both, as appropriate. Count rates from these samples will be used for determining the natural background activity in the MDA calculation. Record these data as described in ESH-1-02-02.

B. For direct surface-contamination background measurements, measure the "direct" radiation levels on uncontaminated items similar to those being checked to get background count values suitable for use in the MDA calculation. Use the Ludlum Model 12 with either the α or β detectors or both, as appropriate.

6.1.2 Bulk or Volume Contamination

A. For concrete and masonry block debris, select a concrete slab and a masonry block from the concrete pile that will be used to determine background.

B. Take ten (10) direct measurements using the ESP-1 with a HP260 probe (or equivalent) on the concrete and masonry block. Based on the ten (10) direct measurements, record the average reading.

C. Take ten (10) direct measurements using the Ludlum 2221 with a ZnS 43-5 probe (or equivalent) on the concrete and masonry block. Based on the ten (10) direct measurements, record the average reading.

D. Take thirty (30) background γ measurements using a 2 in x 2 in NaI (T1) or equivalent detector connected to a portable rate meter instrument on contact with the concrete slab. Record the thirty (30) measurements on a suitable survey form.

E. Use the Upper Bound of background Excel® spreadsheet (LANL 1996a) and determine the gross γ upper bound background range for concrete gamma scanning operations.

F. Take thirty (30) background γ measurements using a 2 in x 2 in NaI (T1) or equivalent detector connected to a portable rate meter instrument on contact with the masonry block. Record the thirty (30) measurements on a suitable survey form.

G. Use the Upper Bound of background Excel® spreadsheet and determine the gross γ upper bound background range for masonry block gamma scanning operations.

H. Take three (3) random 300 gram or greater material samples of concrete and three (3) random 300 gram or greater material sample of masonry from the samples above used in the background determinations and analyze them by gamma and alpha spectroscopy. Based on the three (3) material sample analyses, background concrete radioactive isotope concentration shall be determined for the project.

I. For other materials readily sampled, such as soil, collect and count several representative samples of soil from outside the boundary of the known contaminated area but as close to the site as is reasonable, to approximate the type of soil to be analyzed. Use a sample container, such as a marinelli beaker or a stainless steel bowl, with at least 500 grams of soil or other similar material and a detector geometry identical to that used to calibrate the detector and to count the waste samples. The number of samples required depends upon the volume of soil to be measured for radioactivity. Count rates from these samples will be used for the background term in the MDA calculation (see also LANL 1996b). Record these data as described in ESH-1-02-02.

6.2 Calculation of Minimum Detectable Activity

$$MDA = \frac{2.71+4.65\sqrt{Bt}}{t \cdot E\left(\frac{A}{100}\right)}$$ (Brodsky 1991)

where:

MDA	=	Minimum detectable activity in dpm/100cm^2
B	=	Background (zero activity sample) count rate in cpm
t	=	Sample counting time in minutes
E	=	Detector efficiency
A	=	Detector active area in cm^2

A. Determine the count rate of a blank ("zero-activity" or background) smear or an uncontaminated object similar to the one to be surveyed. Record as described in ESH-1-02-02.

B. Calculate the MDA for each instrument/detector combination using the form in Attachment C. If the instrument MDA is determined to be above the Attachment B value for the activity being measured, then increase the counting time or the detector active area until the instrument MDA value is less than the value in Attachment B. Sample locations are to be entered on Attachment C and on the data sheet used per ESH-1-02-02.

6.3 Determination of Surface Radioactive Contamination

A. Remove any bulk or volume contamination (i.e., soil, mud) from waste equipment or items, if practical. Refer to ESH-1-02-02, "Surveying for Alpha and/or Beta/Gamma Contamination" (LANL 1994a), for details. Calculate the MDA of each survey instrument as described in Section 6.2. If the MDA is less than the values in Attachment B, use the "removable" or

"average" values in Attachment B as described below. If the instrument readings are less than the values in Attachment B, classify the wastes as nonradioactive.

B. Determine the removable contamination levels by smearing and following the technique described in Section 7.2 of LANL Procedure ESH-1-02-02 (LANL 1994a). If levels are above the "removable" levels in Attachment B, decontaminate before proceeding with direct measurements.

C. Once all measurements are completed, Procedure LP107-04.1 will be followed. Note that the contamination guidelines in Attachment 2 to LP107-04.1 are identical with the values in Attachment B to this procedure.

6.4 Determination of Bulk or Volume Radioactive Contamination

Procedure LP107-04.1 governs the radioactivity determination.

6.4.1 Concrete Masonry Block Debris

- Survey the concrete or masonry block with a 2 in x 2 in NaI(Tl) or equivalent detector connected to a portable rate meter instrument. If the survey does not find count rates that exceed 2 times the upper limit of background for the instrument, then the concrete should be considered below release criteria by the field survey.

- If the field survey indicates activity greater than 2 times the upper limit of background, concrete or masonry block samples need to be analyzed by gamma spectroscopy. The analytical sensitivity should be less than 10% of project release criteria for that isotope.

6.4.2 Other Waste Material

Use a sample container, such as a marinelli beaker or a stainless steel bowl, with at least 500 grams of soil or other similar material and a detector geometry identical to that used to calibrate the detector. The number of samples required depends upon the volume of soil to be measured for radioactivity.

- For γ emitters, the Ludlum Model 2221 with the Model 44-10 (2" x 2") scintillation detector is suitable for direct measurements on bulk samples as long as suitable calibrations for the type of emitter and the geometry are available. This does not apply to Pu/Am-contaminated bulk samples.

- For suspected Pu/Am contamination other than smear samples, only the FIDLER detector is appropriate for small or distributed samples. Large containers of soil or other material cannot be measured in the field for Pu/Am contamination.

- For tritium, pure alpha or beta-contaminated samples or material, routine field measurement techniques are not currently available. Samples must be analyzed with a laboratory-type counter.

6.4.3 Waste Classification

If the radioactivity levels are above the MDA of the instrument, classify the waste as radioactive. If the radioactivity levels are below the MDA, classify the waste as non-radioactive.

6.5 Quality Assurance

A. For bulk/volume measurements the instrument must be calibrated with a suitable radioactivity standard prepared with soil, or other material, in a marinelli beaker or other geometry to be used for the sample. This calibration is in addition to the one performed by ESH-4. The instrument settings are not changed by this process; only the field conversion equation is modified for this particular application.

B. Prior to use, check each field instrument with a standard source that is independent of the calibration source. The value found for this check source must agree with the source by ± 20%. All values measured for this check source (even those outside the 20% criteria) shall be entered on the check sheets per the appropriate ER and ESH procedures.

7.0 RECORDS

During implementation of this procedure, the form for the Determination of DA and MDA (Attachment C) will be completed. The FPL is responsible for submitting copies of the completed form to the ER Record Processing Facility, MS M707.

Each direct or smear sample measurement result and the disposition of the item shall be recorded on the appropriate form as required by LP107-04.1. Release of material for public use or disposal must be documented. The FPL is responsible for submitting copies of the completed form to the ER Record Processing Facility, MS M707.

Records for release of material, equipment and waste must be managed in accordance with ESH-1-01-12, "Management of Radiological Records" (April 18, 1996).

8.0 REFERENCES

AEC (US Atomic Energy Commission), June 1974. "Termination of Operating Licenses for Nuclear Reactors," Regulatory Guide 1.86, Oak Ridge, Tennessee (AEC 1974).

Brodsky, A. and R.G. Gallaghar, "Statistical Considerations in Practical Contamination Monitoring," Radiation Protection Management, Vol. 8, No. 4, 1991 (Brodsky 1991).

DOE (US Department of Energy), June 5, 1990. "Radiation Protection of the Public and the Environment," Order 5400.5, Washington, DC (DOE 1990).

DOE/AL (US Department of Energy/Albuquerque), 1993. "Performance Objective for the Waste Moratorium," US Department of Energy Albuquerque Operations Office (DOE/AL 1993).

DOE (US Department of Energy), 1994. "Radioactive Waste Management," Draft Order 5820.2B, Washington, DC (DOE 1994).

DOE (US Department of Energy), 1995. "Application of DOE 5400.5 Requirements for Release and Control of Property Containing Residual Radioactive Material," DOE Memorandum, 11-17-95 (DOE 1995).

LANL (Los Alamos National Laboratory), March 4, 1994. "Surveying for Alpha and/or Beta/Gamma Contamination," Environment, Safety and Health Procedure ESH-1-02-02, Los Alamos, New Mexico (LANL 1994a).

LANL (Los Alamos National Laboratory), December 23, 1994. "Radiological Control Manual," Los Alamos National Laboratory Manual LM107-01.1, Los Alamos, New Mexico (LANL 1994b).

LANL (Los Alamos National Laboratory), November 2, 1994. "Radiation Protection Program Documents" Laboratory Manual LM107-02.3, Los Alamos, New Mexico (LANL 1994c).

LANL (Los Alamos National Laboratory), September 29, 1995. "Releasing Materials and Equipment," Laboratory Procedure LP107-04.1, Los Alamos, New Mexico (LANL 1995).

LANL (Los Alamos National Laboratory), April 12, 1996. "Requirements for Verifying Demolition Concrete Debris Is Below Project Release Criteria and Suitable for Crushing and On-Site Fill," Environmental Restoration Project Method ER-HPM-11, Rev. 0 (LANL 1996).

9.0 ATTACHMENTS

A. Normal Distribution of Radioactivity Counts

B. Surface Contamination Levels

C. Determination of DA and MDA

Normal Distribution of Radioactivity Counts

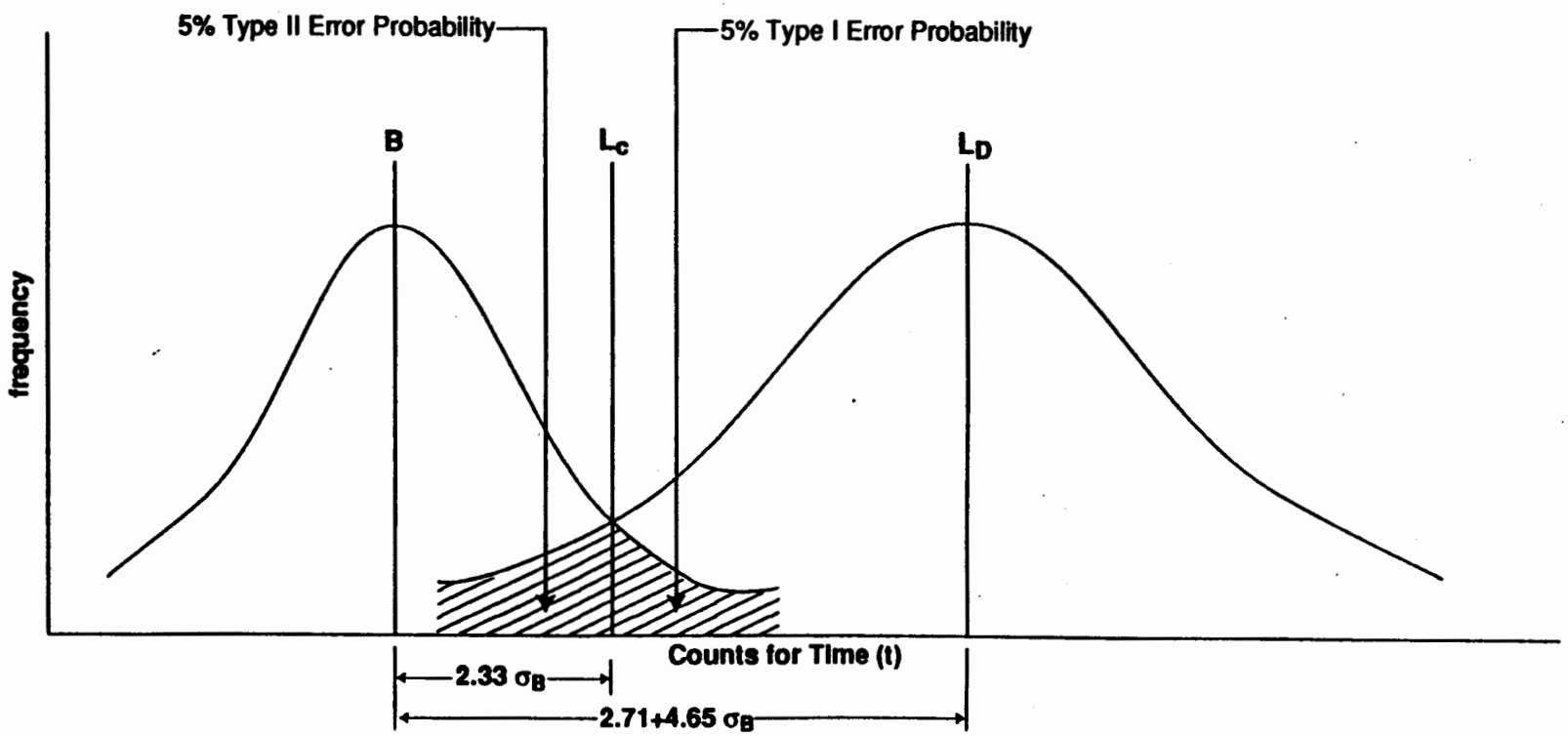

B = blank sample count rate
$\sigma_B = \sqrt{Bt}$
$L_C = 2.33\ \sigma_B$ (the counts used to calculate the DA)
$L_D = 2.71+4.65\ \sigma_B$ (the counts used to calculate the MDA)

Table 1. Surface Activity Guidelines

Allowable Total Residual Surface Activity (dpm/100cm^2)[4]

Radionuclides[5]	Average[6/7]	Maximum[7/8]	Removable[9/9]
Group 1 - Transuranics, I-125, I-129, Ac-227, Ra-226, Ra-228, Th-228, Th-230, Pa-231	100	300	20
Group 2 - Th-natural, Sr-90, I-131, I-133, Ra-223, Ra-224, U-232, Th-232	1000	3000	200
Group 3 - U-natural, U-235, U-238, and associated decay products, alpha emitters	5000	15000	1000
Group 4 - Beta-gamma emitters (radionuclides with decay modes other than alpha emission or spontaneous[10] fission) except Sr-90 and others noted above	5000	15000	1000
Tritium (applicable to surface and subsurface)[11]	N/A	N/A	10000

---

4 As used in this table, dpm (disintegrations per minute) means the rate of emission by radioactive materials as determined by counts per minute measured by an appropriate detector for background efficiency, and geometric factors associated with the instrumentation.

5 Where surface contamination by both alpha- and beta-gamma-emitting radionuclides exists, the limits established for alpha- and beta-gamma-emitting radionuclides should apply independently.

6 Measurements of average contamination should not be averaged over an area of more than 1 m2. For objects of smaller surface area, the average should be derived for each such object.

7 The average and maximum dose rates associated with surface contamination resulting from beta-gamma emitters should not exceed 0.2 mrad/h and 1.0 mrad/h, respectively, at 1 cm.

8 The maximum contamination level applies to an area of not more than 100 cm^2.

9 The amount of removable material per 100 cm^2 of surface area should be determined by wiping an area of that size with dry filter or soft absorbent paper, applying moderate pressure, and measuring the amount of radioactive material on the wiping with an appropriate instrument of known efficiency. When removable contamination on objects of surface area less than 100 cm^2 is determined, the activity per unit area should be based on the actual area and the entire surface should be wiped. It is not necessary to use wiping techniques to measure removable contamination levels if direct scan surveys indicate that the total residual surface contamination levels are within the limits for removable contamination.

10 This category of radionuclides includes mixed fission products, including the Sr-90 which is present in them. It does not apply to Sr-90 which has been separated from the other fission products or mixtures where the Sr-90 has been enriched.

11 Property recently exposed or decontaminated should have measurements (smears) at regular time intervals to ensure that there is not a build-up of contamination over time. Because tritium typically penetrates material it contacts the surface guidelines in group 4 are not applicable to tritium. The Department has reviewed the analysis conducted by the DOE Tritium Surface Contamination Limits Committee ("Recommended Tritium Surface Contamination Release Guides," February 1991), and has assessed potential doses associated with the release of property containing residual tritium. the Department recommends the use of the stated guidelines as an interim value for removable tritium. Measurements demonstrating compliance of the removable fraction of tritium on surfaces with this guideline are acceptable to ensure that non-removable fractions and residual tritium in mass will not cause exposures that exceed DOE dose limits and constraints.

Los Alamos National Laboratory Environmental Restoration
DETERMINATION OF DA AND MDA

Date:_____

Technical Area_____ Operable Unit_____

Calibration procedures must be approved by ESH-4. Calibration results must be within acceptable parameters prior to using a specific instrument to document unrestricted release of materials and equipment. Declaration of waste as "non-radioactive" must be documented with appropriate laboratory or enhanced field analyses.

Instrument Type_____ Model Number_____

Serial Number:_____Calibration Date_____

Surveyor_____ _____
(Signature) Date (Print Name) Group

Background Count Rate _____cpm (B)

Background (or sample) Counting Time _____min. (t)

Detector Efficiency _____(E)

Detector Active Area _____cm^2 (A)

Calculate Minimum Detectable Activity (MDA)

$$MDA = \frac{2.71+4.65\sqrt{Bt}}{t \cdot E\left(\frac{A}{100}\right)} = \_\_\_\_\_ \text{dpm/100 cm}^2$$

Calculate Decision Amount (DA)

$$DA = \frac{2.33\sqrt{Bt}}{t \cdot E\left(\frac{A}{100}\right)} = \_\_\_\_\_ \text{dpm/100 cm}^2$$

Calculations Checked by _____
(Print Name) Group

_____
(Signature) Date

LANL-ER-SOP-10.07, R1

Comments: LANL-ER-SOP-10.07, R1, "Field Monitoring for Surface and Volume Radioactivity Levels"
Pat LaFrate
February 13, 1997

No	Location (Page, Paragraph, line)	Reviewer's Comments/Suggestions [Mandatory (M) or Optional (O)]		Preparer's Proposed Revision/Resolution [Accept (A) or reject (R) Reviewer's comments/suggestions]	
6	p. 6, § 4.1.2, 1st para.	M	Don't reference this procedure. Incorporate the requirements of this procedure in this document.	A	The first ¶ will be rewritten to refer to the procedural steps incorporated in ¶ 6.1.2.
7	p. 7, § 6.0 Gen'l.	M	Remove all procedural steps for smearable and fixed contamination determinations in this procedure or leave in and reference LP107-4.1.	A	LP107-4.1 will be referenced.
8	p. 8, § 6.1.2, "A".	M	Don't reference this procedure. Incorporate the requirements of this procedure in this document.	A	The procedure steps for background determination will be incorporated.
9	p. 9, § 6.3.	M	Delete entire section or leave in and reference LP107-4.1.	A	LP107-4.1 will be referenced as the requirement for classifying items.
10	p. 9, § 6.4.	M	Under B: a. Figures may be appropriate here. You just don't "survey the soil." Also, reproducible geometry such as placing the soil in a marinelli beaker or a certain size bowl, etc. b. 3rd bullet - For tritium, pure alpha and beta emitters. Samples must be analyzed with a laboratory type counter. Not smears.	A A	The discussion will be expanded to include a reproducible geometry as suggested. The word "smear" will be deleted.
11	p. 10, § 7.0, 2nd para.	M	Referencing wrong procedure again. Please reference LP107-4.1.	A	Reference will be corrected.
12	p. 11, § 8.0.	M	Reference the LANL RPP Documents.	A	Reference will be added.
13	p. 14, Attachment B.	M	Replace this table with DOE Order 5400.5, Table 1 (Attached).	A	Attachment B will be replaced with 5400.5 Table I.
14	Gen'l.	M	This procedure needs to be approved by the RCA Waste Advisory Team in accordance with LS105-05 prior to official use in the field.	A	

Robert Murphy EM-SWO
665-2630
Chairman of RCA Waste Team.

Table 1. Surface Activity Guidelines
Allowable Total Residual Surface Activity (dpm/100 cm²)[4]

Radionuclides[5]	Average[6,7]	Maximum[8,9]	Removable[9]
Group 1 - Transuranics, I-125, I-129, Ac-227, Ra -226, Ra-228, Th-228, Th-230, Pa-231	100	300	20
Group 2 - Th-natural, Sr-90, I-126, I-131, I-133, Ra-223, Ra-224, U-232, Th-232	1000	3000	200
Group 3 - U-natural, U-235, U-238, and associated decay products, alpha emitters	5000	15000	1000
Group 4 - Beta-gamma emitters (radionuclides with decay modes other than alpha emission or spontaneous[10] fission) except Sr-90 and others noted above	5000	15000	1000
Tritium (applicable to surface and subsurface)[11]	N/A	N/A	10000

[4] As used in this table, dpm (disintegrations per minute) means the rate of emission by radioactive material as determined by counts per minute measured by an appropriate detector for background, efficiency, and geometric factors associated with the instrumentation.

[5] Where surface contamination by both alpha- and beta-gamma-emitting radionuclides exists, the limits established for alpha- and beta-gamma-emitting radionuclides should apply independently.

[6] Measurements of average contamination should not be averaged over an area of more than 1 m². For objects of smaller surface area, the average should be derived for each such object.

[7] The average and maximum dose rates associated with surface contamination resulting from beta-gamma emitters should not exceed 0.2 mrad/h and 1.0 mrad/h, respectively, at 1 cm.

[8] The maximum contamination level applies to an area of not more than 100 cm².

[9] The amount of removable material per 100 cm² of surface area should be determined by wiping an area of that size with dry filter or soft absorbent paper, applying moderate pressure, and measuring the amount of radioactive material on the wiping with an appropriate instrument of known efficiency. When removable contamination on objects of surface area less than 100 cm² is determined, the activity per unit area should be based on the actual area and the entire surface should be wiped. It is not necessary to use wiping techniques to measure removable contamination levels if direct scan surveys indicate that the total residual surface contamination levels are within the limits for removable contamination.

[10] This category of radionuclides includes mixed fission products, including the Sr-90 which is present in them. It does not apply to Sr-90 which has been separated from the other fission products or mixtures where the Sr-90 has been enriched.

[11] Property recently exposed or decontaminated, should have measurements (smears) at regular time intervals to ensure that there is not a build-up of contamination over time. Because tritium typically penetrates material it contacts, the surface guidelines in group 4 are not applicable to tritium. The Department has reviewed the analysis conducted by the DOE Tritium Surface Contamination Limits Committee ("Recommended Tritium Surface Contamination Release Guides," February 1991), and has assessed potential doses associated with the release of property containing residual tritium. The Department recommends the use of the stated guidelines as an interim value for removable tritium. Measurements demonstrating compliance of the removable fraction of tritium on surfaces with this guideline are acceptable to ensure that non-removable fractions and residual tritium in mass will not cause exposures that exceed DOE dose limits and constraints.

Comments: LANL-ER-SOP-10.07, R1, "Field Monitoring for Surface and Volume Radioactivity Levels"
Pat LaFrate
February 13, 1997

No	Location (Page, Paragraph, line)	Reviewer's Comments/Suggestions [Mandatory (M) or Optional (O)]		Preparer's Proposed Revision/Resolution [Accept (A) or reject (R) Reviewer's comments/suggestions]	
1	p. 3, § 1.0, 2nd sentence.	M	***Surface*** **contaminated material including waste shall be "free released" in accordance with "Releasing Materials and Equipment" LP107-04.1 only. 10.07 shall reference this procedure only and not take its place!!!** **NOTE: The LANL RPP requires the use of LP107-4.1 for the free release of equipment and items including waste. The lab told DOE during last years waste audit that this was the case for all of LANL including subcontractors and the ER Project.**	A	Reference will be corrected.
2	p. 3, § 2.0, 2nd para., last sentence.	M	Documenting survey data used for "free or conditional" release shall be in accordance with LP107-4.1 not ESH-1-02-02.	A	Reference will be corrected.
3	p. 3, § 2.2, 1st para., 2nd sentence.	M	a. "...and associated ***LANL Radiation Protection Program Documents.***" not LANL administrative requirements anymore. b. Instead of relying on a RCT to "read and understand" this procedure, I think formal on-the-job-training with a lesson plan documenting the training is warranted for this procedure.	A A	Sentence will be corrected as requested OJT on 1007 will be incorporated into RCT training programs
4	p. 5, § 4.1, 1st para., last sentence.	M	Surface contaminated wastes shall be classified as radioactive in accordance with LP107-4.1 ***only!*** Delete "....if the wastes are above the surface radioactivity limits specified in table in Attachment B, from DOE Order 5400.5..."	A	The sentence will be corrected.
5	p. 5 and 6, § 4.1.1, 1st, 2nd 3rd and 4th paragraphs.	M	This is all good background information on where the requirements originate but the bottom line is that surface contaminated wastes shall be classified as radioactive in accordance with LP107-4.1 ***only!*** You could leave this stuff in but need to reference LP107-4.1.	A	LP107-04.1 will be referenced.

Los Alamos National Laboratory Environmental Restoration Program Standard Operating Procedure	No: LANL-ER-SOP-10.07 Rev: 1

Field Monitoring for Surface and Volume Radioactivity Levels

	(Print Name)	(Signature)	(Date)
Prepared by	JOHN MANN	John Mann	7-23-96
Quality Review by			
Technical Review by	Pat LaFrate	Pat LaFrate	9-19-96
PM Approval			
QPPL Approval			

Effective Date: _____

1.0 INTRODUCTION

Operational checks assure the reliability of radiation detection instrumentation between routine calibrations in accordance with DOE and LANL policy. This procedure is designed to ensure that operational check of the Ludlum Model 12 portable survey meter is properly performed.

2.0 PURPOSE

To describe the procedure for operational checks of the Ludlum Model 12 survey meter.

3.0 SCOPE

This procedure applies to operational checks of the Ludlum Model 12 portable survey meter used with either the Ludlum Model 44-10 (or similar) Gamma Scintillation Detector or the Model 43-68 (or similar) Gas Proportional Detector.

4.0 DOCUMENT SPECIFIC DEFINITIONS

Operational Check - In the context of this procedure, an operational check refers to any check or test to determine that the instrument is operating properly.

Performance Check - In the context of this procedure, a performance test is an operational check of an instrument to compare its readings to established reference readings within ±20% on each applicable scale of the instrument.

Reference Reading - A reference reading is a reading obtained on an instrument when exposed to a check source in a constant and reproducible manner. The reading is performed after instrument calibration and establishes the "reference" point for later readings.

Response Check - A response check is an operational check of an instrument to compare a single reading to an "expected response," either an alarm set point or a meter response within ±20% of the reference reading.

5.0 RESPONSIBILITIES

RCTs and other appropriately trained and qualified individuals shall perform and document operational checks in accordance to this procedure.

6.0 PRECAUTIONS AND LIMITATIONS

6.1 Practice ALARA when handling radioactive sources.

6.2 Each instrument should have an associated reference source.

6.3 Personnel conducting operational checks of survey instruments must be aware of the consequences of not performing checks in accordance with this procedure including:

- inadequate monitoring of contamination
- inadequate documentation of the required instrument operational checks

7.0 PROCEDURAL STEPS

7.1 Equipment

7.1.1 Ludlum Model 3 survey meter

7.1.2 Ludlum Model 44-10 Gamma Scintillation detector
Ludlum Model 43-68 Gas proportional detector

7.1.3 Instrument check source

7.1.4 Record forms

7.2 Procedure for Performing Operational Checks

7.2.1 Visual Check - Verify that the meter calibration has not expired, check the condition of the meter for damage.

7.2.2 Battery Check (Perform each time the instrument is turned on) - Rotate the selector switch to the battery position (BAT). The indicator will come to

rest within the region marked BAT TEST when the batteries are good. If the battery test fails, follow the guidance in the specific instrument manual for battery changes, or contact your supervisor for instructions.

7.2.3 Detector Efficiency - Calculate the efficiency by first obtaining a source with a known activity. Measure the source using the meter. Use the following formula to determine efficiency:

$$Efficiency = \frac{measured\ activity\ of\ source}{known\ activity\ of\ the\ source}$$

7.2.4 Calculate the minimum detectable activity (MDA) by completing Attachment 2 and record result on the Operational Check Performance Log. (Note: MDA is only applicable to the Model 43-68.)

Compare this value to the release criteria from the project management plan for the site to determine adequate sensitivity of the instrumentation. An MDA that is less than 50% of applicable criteria is desirable but not required.

7.2.5 Reference Reading for Model 43-68 Gas Proportional Detector (Performed when the instrument is first received from the ESH-4 Radiation Instrument Pool following calibration and before the instrument is deployed for use.) The procedure should be performed as documented in Section 7.2 of ESH-1-07-85. The reference reading is performed for both the response check and the performance check.

7.2.6 Response Check for Model 43-68 Gas Proportional Detector (Perform prior to each use, during intermittent use conditions and several times a day during continuous use, in accordance with ANSI N323-1978, "Radiation Protection Instrumentation Test and Calibration."

Set the instrument's range selector switch to the appropriate range.

Check the background count rate or dose rate (background is typically less than 200 cpm for beta/gamma and 30 cpm for alpha). An unusually high background may indicate a problem. If you suspect a problem with the instrument, cable, or detector, return it to the Radiation Instrument Pool.

Place the check source in the same position in relation to the instrument detector as that used to establish the reference reading. The Model 43-68 allows either an alpha or beta source to be used.

Allow the meter to stabilize.

Subtract the background from the instrument meter reading and compare the net meter response to the acceptable range. The meter must indicate a net response within the acceptable range to pass the response check.

If the instrument fails, return in to the Radiation Instrument Pool. If the instrument passes the response check, then initial and date the response check tag. The first response of the day is the only one that needs to be recorded.

7.2.7 Performance Check for Model 43-68 Gas Proportional Detector (Perform as specified in the facility-specific RMIs and shall also be performed whenever instrument batteries or cables are changed, whenever the instrument fails a routine response check, or at any time the proper response of the instrument is in question.)

Take net readings for the instrument using the same source used in the reference reading.

Record the net readings, date, time and RCT's printed name and signature on the performance test log.

Compare these net readings for each range to the acceptable range on the test log. The instrument must indicate a response within the acceptable range to pass the performance test.

If the instrument fails the performance test, then indicate "FAIL" on the test log and return it to the Radiation Instrument Pool.

If the instrument passes the performance test, indicate "PASS" on the test log.

7.2.8 Reference Reading for Model 44-10 Gamma Scintillation Detector (Performed when the instrument is first received from the ESH-4 Radiation Instrument Pool following calibration and before the instrument

is deployed for use.)

Determine background reading for the area.

Set up a gamma source configuration that is applicable to the source strength and each scale of the survey meter. This will be the Reference Configuration for future response checks.

For each combination of scale and distance, record the net readings on the Operational Check Performance Log (Attachment 1). These are the Reference Readings.

7.2.9 Response Check for Model 44-10 Gamma Scintillation Detector (Perform prior to each use. during intermittent use conditions and several times a day during continuous use, in accordance with ANSI N323-1978, "Radiation Protection Instrumentation Test and Calibration.")

Set the instrument's range selector switch to the appropriate range.

Check the background reading (background is typically less than 200 cpm for beta/gamma). An unusually high background may indicate a problem. If you suspect a problem with the instrument, cable, or detector, return it to the Radiation Instrument Pool.

Place the check source in the Reference Configuration as used to establish the reference reading. For the Ludlum Model 44-10 Gamma Scintillation Detector, a gamma source is required.

Allow the meter to stabilize.

Subtract the background from the instrument meter reading. Compare the net reading for the applicable scales to the Reference Reading. The meter must indicate a net response within the acceptable range (±20% of the Reference Reading) to pass the response check.

If the instrument fails, return in to the Radiation Instrument Pool. If the instrument passes the response check, then initial and date the response check tag. The first response of the day is the only one that needs to be recorded.

8.0 REQUIRED RECORDS

Operational Check Performance Log
Gamma Operational Check Performance Log

9.0 REFERENCES

"Operational Checks of Beta/Gamma Survey Instruments" ESH-1-07-85
Users manual for the Ludlum Model 12 survey meter.

10.0 ATTACHMENTS

Attachment 1, Operational Check Performance Log
Attachment 2, MDA Calculation

ATTACHMENT 1

Operational Check Performance Log

Instrument Manufacturer: _____ Model: _____ HSE (P/N)# or Serial #: _____ Cal Due Date: _____

Detector Type: _____

Location: _____ Date Reference Readings Established: _____

RCT/HPT: _____ / _____

Printed Name / Signature

Check Source

Isotope: _____ Reference Reading: _____ cpm

Activity: _____ Source ID#: _____

Acceptance Range (±20%) _____ / _____ Efficiency _____

Date/Time	Background (cpm)	Instrument Reference Reading (cpm)	Reference Source Reading (cpm)	Results (pass/fail)	Printed Name/Signature	Comments (see reverse)

Reviewed by _____ Date_____

Signature

7/10/95, Revision 0

ATTACHMENT 2

MDA CALCULATION

Instrument/probe _____ / _____

Serial Numbers _____ / _____

Cal Due Date _____ Average Background _____ cpm

MDA CALCULATIONS:

$$MDA = \frac{\frac{2.71}{T_s} + 3.29\sqrt{\frac{R_b}{T_b} + \frac{R_b}{T_s}}}{efficiency}$$

Where: T_s = Sample count time in minutes
T_b = Background count time in minutes
R_b = Background count rate in cpm
eff. = detector efficiency

T_s = _____

T_b = _____

R_b = _____

eff.= _____

$$MDA = \frac{2.71 + 3.29(\_\_\_\_\_ + \_\_\_\_\_)^{1/2}}{(\quad)}$$

MDA = _____

This formula calculates the activity level in dpm/100 cm^2 which can be detected with 95% confidence of having neither a false positive nor a false negative result.

Technician: _____ Date: _____

Reviewed by: _____ Date: _____

Instruction Manual

LUDLUM MODEL 2221

PORTABLE SCALER RATEMETER

Revised December 1991
Serial No. 89651

LUDLUM MEASUREMENTS, INC.

501 OAK 915 - 235-5494 P. O. BOX 810

SWEETWATER, TEXAS, U.S.A., 79556

DESIGNER AND MANUFACTURER
OF
Scientific and Industrial
INSTRUMENTS

LUDLUM MODEL 2221

PORTABLE SCALER RATEMETER

Revised December 1991
Serial No. 89651

LUDLUM MEASUREMENTS, INC.
501 OAK ST., P.O. BOX 810
SWEETWATER, TX 79556
915/235-5494 FAX: 915/235-4672

QC

WARRANTY CERTIFICATE

Ludlum Measurements, Inc. warrants the products covered in this instruction manual to be free of defects due to workmanship, materials, and design for a period of twelve months from the date of delivery, with the exception of photomultiplier tubes and geiger tubes, which are warranted defect-free for 90 days. This warranty is voided in instances of improper installation, abuse, mishandling, misuse, freight damage, or repair by unqualified persons.

In the event of instrument failure, notify Ludlum Measurements, Inc. for repair or replacement. Liability of this warranty is limited to the purchase price of the instrument.

RECEIVING CONDITION EXAMINATION

Be sure to verify that the shipping carton is received in good condition with no visible damage. Should the instrument be received in a damaged condition, save the shipping container and the packing material and request an immediate inspection by the carrier.

RETURN OF GOODS TO MANUFACTURER

If equipment needs to be returned to Ludlum Measurements, Inc. for repair or calibration, please send to the address below. All shipments should include documentation containing return shipping address, customer name, telephone number, description of service requested, and all other necessary information. Your cooperation will expedite the return of your equipment.

LUDLUM MEASUREMENTS, INC.
ATTN: REPAIR DEPARTMENT
501 OAK STREET
SWEETWATER, TX 79556
915-235-5494
FAX 915-235-4672

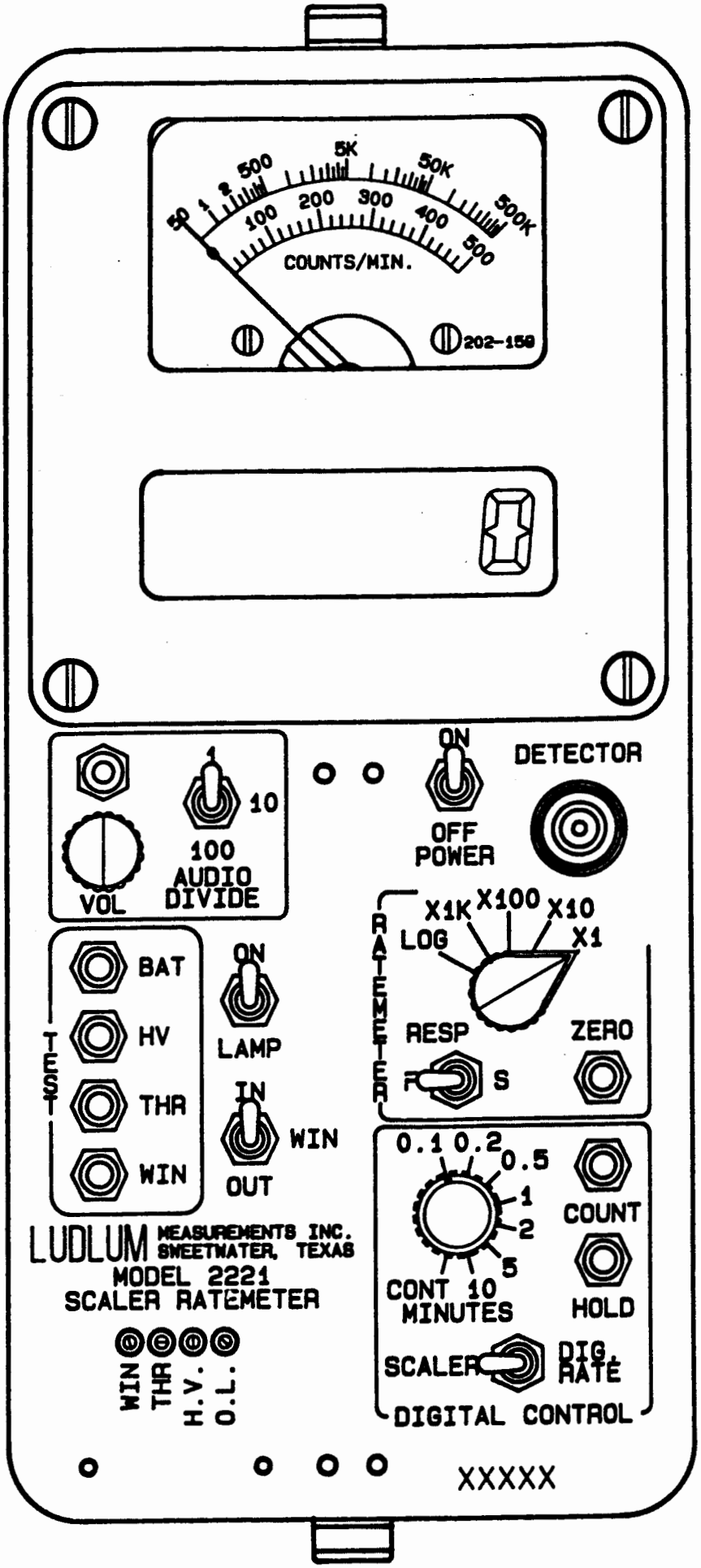

CHG	NO.				DWN
DWN PW	DATE 5/31/88	CHK	DATE	APP	DATE
TOL:			SCALE:		
TITLE MODEL 2221 PORTABLE SCALER					
LUDLUM MEASUREMENTS, INC. SWEETWATER, TEXAS			SERIES 281		SHEET 74

TABLE OF CONTENTS

1. GENERAL 1

2. SPECIFICATIONS 1

3. DESCRIPTION OF CONTROLS AND FUNCTIONS 2

4. OPERATING PROCEDURES 3

   4.1 Initial Preparation 3
   4.2 Operating Point 4
   4.3 Limitation of Controls 4

5. DETERMINING INSTRUMENT PLATEAU AND SELECTING OPERATING POINT 4

6. WINDOW OPERATION AND ENERGY CALIBRATION PROCEDURES 5

7. OVERLOAD DETECTION CALIBRATION 6

8. CALIBRATION 6

   8.1 Ratemeter Calibration 6
   8.2 TEST Pushbutton/Display Calibration 7
   8.3 High Voltage Calibration 7
   8.4 Threshold/Gain Calibration 7

9. OVERHAUL PROCEDURE 8

   9.1 Amplifier/Power Supply Board 8
   9.2 Processor Board Checkout 9
   9.3 Functional/Chassis Checkout 11

PARTS LIST 14

   Model 2221 Portable Scaler Ratemeter 14

      Amplifier/Power Supply Board, Drawing 261 X 56 14
      Processor Board, Drawing 261 X 91 18
      Calibration Board, Drawing 261 X 59 19
      LCD Display Board, Drawing 261 X 58 20
      Backplane Board, Drawing 261 X 60 20
      Chassis Wiring Diagram, Drawing 261 X 61 21

DRAWINGS AND DIAGRAMS 23

1. GENERAL

The Ludlum Model 2221 Portable Scaler Ratemeter is a self-contained counting instrument designed for operation with scintillation, proportional or G-M detectors. Power is derived from four flashlight batteries.

The unit is complete with a voltage-sensitive preamplifier, linear amplifier, electronic timer, detector high-voltage power supply and detector overload detection circuitry.

A single channel analyzer is also featured in this unit for use in gamma spectrum analysis. The analyzer may be switched on or off, allowing gross or window counting.

The unit has a combination four decade linear and log ratemeter and a six digit LCD readout for the scaler and digital ratemeter. Potentiometers are supplied for threshold, window and high-voltage controls.

2. SPECIFICATIONS

- **HIGH VOLTAGE**: 0 to 2400 volts with digital readout
- **BATTERY COMPLEMENT**: four each "D" cell flashlight batteries
- **BATTERY LIFE**: approximately 250 hours with Duracell batteries (MN1300, size D, alkaline batteries)
- **CALIBRATION STABILITY**: less than 15% variance to battery endpoint
- **SENSITIVITY**: voltage-sensitive and adjustable from 1.5 mV to 100 mV; factory calibrated at 10 mV
- **INPUT IMPEDANCE**: 22k
- **READOUT**: liquid crystal display with toggle ON/OFF back lighting
- **METER**: 2 1/2-inch scale, 1 mA, pivot and jewel suspension
- **SCALE**: log: four decade from 50 to 500k CPM
  linear: 0-500 CPM with multipliers of X1k, X100, X10, X1
- **RANGE**: 0 to 500,000 Counts per Minute
- **LINEARITY**: plus or minus 5% of full scale
- **RESPONSE**: 2 positions, fast 4.4 seconds, slow 22 seconds, for 90% of full deflection
- **CALIBRATION CONTROLS**: recessed screwdriver adjustments
- **AUDIO**: built-in unimorph speaker with click per event and switch selectable divide by 1, 10, and 100.
- **CONNECTOR**: Series "C"
- **SIZE**: 11 (4.25")W x 25 (10")L x 15 (6")H (9" high with handle)
- **WEIGHT**: 2.5 (5.5lbs.) including 4 each "D" cell batteries
- **FINISH**: computer beige polyurethane enamel with silk-screened nomenclature

3. DESCRIPTION OF CONTROLS AND FUNCTIONS

- **POWER**: Two-position switch to turn power to instrument on or off

- **DETECTOR**: series "C" connector for detector

  Input Impedance: 22k

  Ballast Resistor: 1M

- **RATEMETER**:

  - **F-S RESP Switch**: Two-position switch for selecting ratemeter response: F position 4.4 seconds to 90%; S position 22 seconds to 90%

  - **ZERO**: when pressed, resets the ratemeter

  - **RANGE SELECTOR**: Five-position switch to select analog ratemeter range:

    LOG: selects the upper scale of the meter to provide a four-decade logarithmic readout from 50 to 500k CPM
    X1k: 0-500k CPM
    X100: 0-50k CPM
    X10: 0-5k CPM
    X1: 0-500 CPM

- **DIGITAL CONTROL**:

  - **COUNT Pushbutton**: When pressed, resets and starts the counter. While the counter is counting, two colons on the display are turned on.

  - **HOLD Pushbutton**: When pressed, stops the counter and leaves the count in the display.

  - **SCALER/DIG RATE Toggle Switch**: Two-position toggle switch for selecting scaler or digital ratemeter

    SCALER Position: The display shows the counter contents.

    DIG. RATE Position: The display shows the ratemeter count rate.

    ✓ Note: The scaler and digital ratemeter are active even when not selected. This allows the user to start a timed count, switch to the Digital Ratemeter and then switch back to Scaler without having to restart the counter.

  - **MINUTES Selector Switch**: Eight-position switch used for selecting the count times

POSITION	COUNT TIME IN MINUTES
0.1	0.1
0.2	0.2
0.5	0.5
1	1
2	2
5	5
10	10
CONT	COUNTER COUNTS UNTIL HOLD IS PRESSED

- **CALIBRATION CONTROLS**:

  - **WIN**: 20 turn potentiometer used to adjust window width when the window toggle switch, WIN, is in the "IN" position

- **THR**: 20 turn potentiometer used to adjust the Threshold

- **HV**: 20 turn potentiometer used to adjust detector voltage

- **O.L.**: 20 turn potentiometer used to adjust detector overload current

- **TEST**:

- **BAT Pushbutton Switch**: When pressed, displays the battery voltage in the digital display.

- **HV Pushbutton Switch**: When pressed, displays the detector high voltage in the digital display.

- **THR Pushbutton Switch**: When pressed, displays the Threshold setting in the digital display.

- **WIN Pushbutton Switch**: When pressed, displays the window setting in the digital display.

- **LAMP Toggle Switch**: Two-position switch to turn on the display lights.

- **WIN Toggle Switch**: Two- position switch for switching the window IN or OUT

IN position: The SCA is set up as a window counter.

OUT position: The SCA is set up as a gross counter.

- **AUDIO**:

- **VOL Control**: One-turn potentiometer used to adjust the volume of the speaker or headset.

- **AUDIO DIVIDE**:

1 Position: provides 1 click per event
10 Position: provides 1 click per 10 events
100 Position: provides 1 click per 100 events

- **1/8" PHONE JACK**: Used for headset. When headset is plugged in, the unimorph on the can is disabled.

- **LIQUID CRYSTAL DISPLAY**: Six-1/2" high digits, displaying counter contents or digital count rate

- **STATUS INDICATORS**:

Counter Overflow: When in SCALER mode, the left digit alternates between the correct digit and an "H".

Detector Overload: The display flashes all dashes.

Battery: When the battery voltage is 4.4 volts or less, all decimal points are turned on.

Scaler Counting: The two colons are turned on when MINUTES selector switch is in CONT position.

4. OPERATING PROCEDURES

4.1 Initial Preparation

- Unscrew battery door latch.

- Install for "D" size batteries in the battery holder. The correct position of the batteries is indicated on the bottom of the battery door.

o Switch the POWER ON/OFF switch to the ON position. A random number will first be observed in the display, then 8.8:8.8:8.8. The third displayed number will be the program version. (At the time of this printing, program version is #261010.)

o Press COUNT pushbutton. The display should zero. Two colons should appear on the display.

o Press HOLD pushbutton. The colons should disappear.

o Switch LAMP toggle switch to the ON position. LCD display backlighting and two lamps at the bottom of the analog meter should be illuminated.

✓ NOTE: If the Lamp switch is left in the ON position for extended periods of time, battery life will decrease rapidly.

o Check TEST pushbutton functions for proper operation.

4.2 Operating Point

Instrument and detector operating point is established by setting the probe voltage (HV) and instrument sensitivity (THR). For a given detector system, efficiency, background and noise are fixed by the physical makeup of the detector and rarely vary from unit to unit. However, the selection of the operating point makes a marked difference in the apparent contribution of these three sources of count.

In the singular case of the G-M detector, a minimum operating voltage is required to establish the G-M operating region. (At lower voltages, the detector operates as a very insensitive proportional counter.) This detector is not capable of energy discrimination (pulse-height discrimination). The Threshold (THR) is typically adjusted to 550, with a THR reading of 100 = 10 mV input pulse, for G-M detectors.

For gain sensitive detectors (proportional or scintillation), the most straightforward method of selecting the operating point is to develop a graph, relating count rate to system gain. This relationship is commonly referred to as a plateau or instrument plateau curve. System gain may be changed by adjusting detector high voltage or THR control. The threshold is typically adjusted for 100 = 10 mV for scintillation detectors and 50 (5mV equivalent) on the THR readout for proportional detectors.

4.3 Limitation of Controls

HV Control provides a linear adjustment of the detector voltage supply. The range is approximately 0 to 2400 volts. Changing the detector voltage will cause the detector gain to change. It should be remembered that a linear change in voltage will cause an exponential change in detector gain.

THR Control sets the basic pulse discrimination point of the scaler.

WIN Control is calibrated with the THR control so that the reading of the WIN control is equivalent to the reading of the THR control. As an example, 100 on the THR is equal to 100 on the WIN.

5. DETERMINING INSTRUMENT PLATEAU AND SELECTING OPERATING POINT

☐ a. Set WIN ON/OFF to OFF.

☐ b. Set MINUTES switch to 0.1 minutes.

☐ c. Set THR control at 100.

☐ d. With detector shielded from source, turn up high voltage control and tak a plot of HV versus background count rate

until the detector maximum voltage rating is reached. (Maximum voltage on most scintillation detectors is 1500-1600 VDC; maximum voltage on proportional detectors is reached at the continuous discharge point. Return HV control to minimum.

☐ e. Expose the detector to a source and again make a plot of voltage versus count.

☐ f. Plot both sets of data and select the operating point to correspond with maximum source count and minimum background count. Avoid areas of very fast count rate changes with small changes in detector voltage. The optimum operating point for low background detectors is just above the inflection point (or break-over point) of the plateau curve. If background count is irrelevant, shift operating point to the plateau center for greater stability.

6. WINDOW OPERATION AND ENERGY CALIBRATION PROCEDURES

■ The following procedure calibrates threshold directly in keV.

☐ a. Place RATEMETER multiplier switch to LOG position.

☐ b. Unscrew and remove CAL cover.

☐ c. Press HV pushbutton. The HV should read out on the display directly in volts. While depressing the HV pushbutton, turn HV potentiometer maximum counterclockwise. The HV should be less than 50 volts.

☐ d. Depress the THR pushbutton. Turn the THR potentiometer clockwise until 652 displays.

☐ e. With WIN IN/OUT switch IN, depress the WIN pushbutton. Turn the WIN potentiometer until 20 appears on the display.

☐ f. Switch WIN IN/OUT to OUT.

☐ g. Connect the probe and expose to Cs137 source.

☐ h. Increase HV (if HV potentiometer is at minimum, it will take approximately 3 turns before any change is indicated). While increasing the HV, observe the log scale of the ratemeter. Increase HV until ratemeter indication occurs.

☐ i. Switch WIN IN/OUT switch to IN.

☐ j. Turn the HV control until maximum reading occurs on the log scale. Increase HV until reading starts to drop off, then decrease the HV for maximum reading.

☐ k. Turn RATEMETER selector switch to the X1K position.

☐ l. Press ZERO pushbutton and release. If meter does not read, switch to a lower range until a reading occurs.

☐ m. Carefully adjust HV potentiometer until maximum reading is achieved on the range scale. The instrument is now peaked for Cs137 on both the LOG and Linear scales.

✓ NOTE: When the THR control is adjusted, the effective window width remains constant. As an example, if the THR is set at 612, the WIN at 100, a 662 keV peak 612 + (100 divided by 2) will be centered in the window. Then the threshold point is equivalent to 612 keV with a 100 keV

window and calibrated for 100 keV per turn. Now if the threshold is reduced to 250, the threshold is equivalent to 250 keV, but the window (100) is still equal to 100 keV. Proportionally, this represents a broader window.

7. OVERLOAD DETECTION CALIBRATION.

■ Detector Count Saturation is detected in this instrument and is indicated by the LCD display flashing all dashes and the analog ratemeter deflecting full scale. The count saturation or "overload" point is calibrated by the O.L. front panel control.

☐ a. Adjust the O.L. control to fully clockwise position.

☐ b. Connect detector and set HV for correct detector operating voltage.

☐ c. Expose detector to radiation field and while observing ratemeter, increase field intensity until a decrease in count rate is noticed. For alpha scintillators, the detector photomultiplier tube (PMT) should be exposed to a small light leak through the probe face to establish the detector saturation point.

☐ d. With the detector in the count saturation field, adjust the O.L. control-counterclockwise until the overload alarm point is reached (flashing dashes in LCD display).

☐ e. Position detector in a lower field intensity just below the saturation point and confirm overload is defeated.

Example: Ludlum Model 44-9 GM pancake detector saturates at approximately 500 mR/hr.

☐ f. Full scale instrument analog meter reading= 200 mR/hr. Set the Model 2221 to overload at 500 mR/hr field, then position detector in a 300 mR/hr field and confirm that overload alarm is defeated. The O.L. control will have to be "fine adjusted" to perform the above procedure.

8. CALIBRATION

■ Refer to schematic and component layout for the following calibration.

8.1 Ratemeter Calibration

☐ a. Connect Frequency counter to pin 18 of U22 (80C51FA) on Processor board, #5261-073. Confirm crystal frequency is 6 Mhz ±0.1% (6,006 khz-5,994 khz).

☐ b. Set THR control to 100 and Window IN/OUT switch to the OUT position.

☐ c. Connect Ludlum Model 500 Pulser or equivalent and adjust count rate for 40,000 CPM.

☐ d. Switch Ratemeter Multiplier switch to the X100 position. Response to F.

☐ e. Adjust pulse amplitude above threshold until a steady count rate is observed on ratemeter.

☐ f. Adjust R40 Meter Cal (labeled MCAL) on Processor board, for 40,000 CPM on meter.

☐ g. Switch SCALER/DIG RATE switch to the SCALER position.

☐ h. Confirm counter time operation by taking 0.1 minute count. Colons should be observed during count cycle.

8.2 TEST Pushbutton/Display Calibration

☐ a. Adjust THR control to fully clockwise position.

☐ b. Connect positive voltmeter lead to pin 7 of U3 (TLC27M7IP) on the Amp./P.S. board. Connect negative lead to ground near U3.

☐ c. Press the THR test pushbutton and adjust R171 Volt Cal (labeled "V"), so that the front panel display reading corresponds to the voltmeter reading at pin 7 of U3.

8.3 High Voltage Calibration

☐ a. Connect HV meter (2500 Megohm input impedance or greater) to the junction of R32 (4.7 Meg) and R33 (1 Meg) on Amp/P.S. board.

☐ b. While pressing the HV Test pushbutton, adjust the HV front panel control until the display reads 1500.

☐ c. Adjust R175 HV Cal on Amp/P.S. board for 1500 ±5 volts on external HV meter.

☐ d. Confirm HV will adjust from 50 to 2400-2500 volts. Insure HV displayed reading tracks within 2% of HV output.

8.4 Threshold/Gain Calibration

☐ a. Set pulser pulse amplitude to 10mV.

☐ b. With THR set at 100, on display, fine adjust R174 Gain control (on P.S. board) until ratemeter reads 30,000 CPM with 40,000 CPM from pulser.

☐ c. Adjust THR control for readings of 200, 300, 400, and 500 to insure the pulser input is 20, 30, 40 and 50mV respectively. Use the 3/4 CPM input setting to discriminate turn on points as in procedure above.

☐ d. Adjust THR control back to 100.

☐ e. Switch Window IN/OUT switch to the IN position. Adjust WIN control for 100, 200, 300, 400 and 500 to confirm 20, 30, 40 and 50mV window cut off points.

☐ f. Set WIN back to 100 and OUT position.

☐ g. Check the rest of the front panel functions for proper operation.

9. OVERHAUL PROCEDURE

■ The checkout below can be performed with boards in instrument. An extender board (part no. 5261-098) is available if better access to board components is necessary.

9.1 Amplifier/Power Supply Board

☐ a. Connect L.V. power supply to Model 2221 and plug in Amp/P.S. board. (component side to back of instrument).

☐ b. Adjust the WIN, THR and O.L. front panel controls to maximum clockwise position. Turn HV control to maximum counterclockwise position. Switch the lamp switch to the OFF position. Window IN/OUT switch to the OUT position.

☐ c. Adjust input voltage for approximately +4 VDC and turn instrument to the ON position. Battery current should be approximately 30 mA or less.

☐ d. Confirm pin 8 of U7 (CA3290A) is equal to or greater than +6.4 VDC.

☐ e. Increase supply voltage to approximately +5 VDC and pin 8 of U7 should increase to +9 ±1 VDC.

☐ f. Check for +5 ±0.15 VDC at pin 8 of any of the TLC27M7IP's.

☐ g. Check for -6.5 ±0.5 VDC at pin 4 of any of the same TLC27M7IP's.

☐ h. Connect subminax wire from detector input to Amp/P.S. board.

☐ i. Connect HV meter to detector input and adjust front panel HV control to fully clockwise position.

☐ j. Adjust the HV front panel control to the fully clockwise position. Then adjust R175 HV CAL for approximately 2400-2450 VDC. Decrease front panel HV control to the fully counterclockwise position and confirm that HV output is 50 volts or less. Then set HV for approximately 1000 VDC.

☐ k. Connect voltmeter to pin 1 of U3 (TLC27M7IP).

☐ l. With HV output set at approximately 1000 volts adjust R176 Current Cal (labeled "O") for approximately 0.1 VDC at pin 1 of U3.

☐ m. Connect Overrange Simulator (needs to have a 1000 meg resistor) to detector input and confirm pin 1 of U3 increases to approximately 0.15 ±0.01 VDC.

OVERRANGE SIMULATOR

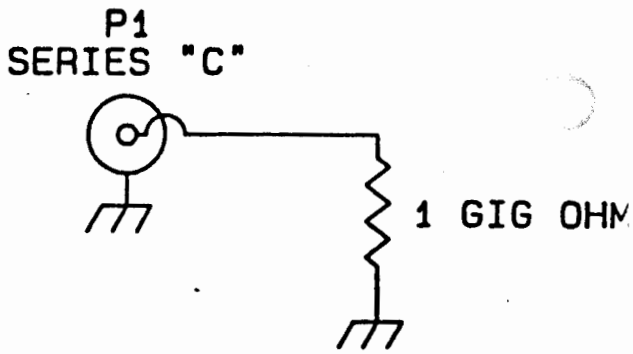

☐ n. Connect voltmeter to pin 1 of U2 (LM358) and with Overrange Simulator connected, adjust O.L. control on the front panel counterclockwise until the voltmeter reads approx +0.5 VDC. Disconnect Simulator and confirm pin 1 of U2 goes above +3 volts.

☐ o. Turn O.L. control to its maximum clockwise position.

☐ p. Connect positive voltmeter lead to pin 7 of U3 (TLC27M7IP) and connect negative lead to ground close to U3.

☐ q. Press the WIN test pushbutton and confirm pin 7 of U3 is approximately 2.7 to 3.8 volts.

☐ r. Press THR test and confirm pin 7 is 1.23 ±0.02 VDC.

☐ s. Press BAT test pushbutton and confirm pin 7 is approximately 0.5 with supply voltage at +5 VDC.

☐ t. With the HV still set at 1000 VDC, pin 7 of U3 should be approximately 1 ±0.1 VDC while pressing the HV test pushbutton.

☐ u. Connect oscilloscope to pin 3 of U5 (LM331) and adjust R171 Volt Cal (labeled "V") for approximately 2 khz (0.5 millisecond period) with the HV pushbutton pressed.

☐ v. Connect voltmeter to pin 7 of U3 and while pressing the THR test pushbutton, adjust THR control for approximately +0.1 VDC.

☐ w. Switch the Window IN/OUT switch to the IN position. While pressing the WIN test pushbutton, adjust the WIN control for approximately +0.1 VDC at pin 7 of U3 also. Then switch the Window to the OUT position.

☐ x. Connect oscilloscope to pin 2 of U8 (CA3096).

☐ y. Connect pulser and set pulse amplitude for approximately 10 millivolts. Set CPM to 40,000.

☐ z. Adjust R174 Gain (labeled "G") to maximum clockwise position and confirm positive pulses at pin 2 of U8 are approximately 1 ± 0.1 volt in amplitude.

☐ aa. Connect oscilloscope to pin 10 of U105 (CD4098).

☐ ab. Adjust R174 Gain until pulses just start to appear at pin 10 of U105. Then adjust pulser amplitude until pulses are clearly visible.

☐ ac. Adjust R173 T Pulse (labeled "T") for a 2.5 microsecond positive pulse width at pin 10 of U105.

☐ ad. Connect oscilloscope to pin 7 of U105 and adjust R172 Width (labeled "W") for a 3 microsecond negative pulse width.

☐ ae. Switch the Window IN/OUT switch to the IN position and verify that the pulses are present at pin 7 of U105 from 10 to 20 mV input pulse amplitude and off above approximately above 20 mV.

☐ af. Switch Window IN/OUT switch to the OUT position and verify the pulses appear above the window limit as in the above step.

☐ ag. Battery current should be less than 30 mA with +5 VDC supply input.

9.2 Processor Board Checkout

■ The procedure below is to be used without the Amp/P.S. board. If the Amp/P.S. board is used, delete the steps containing the signal generator use. Use the pulser for the standard count rate inputs. Window, Threshold, HV and Bat test will display the control setting.

☐ a. Plug in Amp/P.S. Simulator board and connect Signal Generator to jumper wires (black= probe ground).

☐ b. Plug in Processor board, component side toward back of instrument. Connect display ribbon cable.

☐ c. Set Signal Generator to square wave function.

Range= 10k and all other switches to the OUT position.

☐ d. Adjust the Freq. Symmetry, Amplitude and D.C. Offset controls to achieve a 5 volt negative pulse with a pulse width of approximately 50 microseconds and a period of approximately 1.2 milliseconds.

☐ e. With supply voltage set at +5 ±0.15 VDC, turn instrument ON and observe display= 8.8:8.8:8.8 for approximately 2 seconds, then 261010 indicating the program number.

☐ f. Connect Frequency Counter to pin 18 of U22 (80C51FA) and confirm crystal frequency is 6 Mhz ±0.1% (6,006 khz-5,994 khz).

☐ g. Switch the Scaler/Dig. Rate Switch to the Dig Rate position.

☐ h. Counts should start accumulating every 2 seconds until approximately 50,000 CPM is observed. (The symmetry control can be fine adjusted until 50,000 CPM is achieved). At this displayed count rate, the low BAT Test indication should be observed, indicated by 5 decimal points across the bottom of the display.

☐ i. Press BAT Test and display should be 4.1 ±0.2.

☐ j. Press HV and WINDOW= 410 ±20. Threshold pushbutton has no effect without Amp/P.S. plugged in.

☐ k. Switch Ratemeter Response time to F.

☐ l. Switch Ratemeter multiply to X100.

☐ m. Adjust R40 Meter Cal, (labeled MCAL), until Ratemeter matches displayed accumulated count (approximately 50,000 CPM).

☐ n. Decade the Multiplier range on the Signal Generator to correspond to each decade on Rate Multiplier to confirm range switch operation.

☐ o. Connect Voltmeter to recorder output and confirm R41 RCDR CAL, (labeled RCAL), will adjust from 0 to approximately 3.7 VDC, with full scale CPM on display and ratemeter. Then set for 1 VDC to equal full scale meter deflection.

☐ p. Connect Oscilloscope to pin 9 of U10 (ICM7556) and decade Sweep Generator down to the 1k range.

☐ q. Switch the Audio Divide switch between the 1, 10, and 100 positions to confirm Audio frequency divides or multiplies by 10, between each position.

☐ r. Connect Headset or unimorph and confirm volume control operation.

☐ s. With full scale meter deflection (500), check F/S response time (90% full scale) for 4.5 ±0.5 seconds and 22 ±2 seconds respectively.

☐ t. Check Count, Hold, and Zero pushbutton functions.

☐ u. Switch Scaler/Dig. Rate switch to the Scaler position and check the 0.1, 0.2 and 2 minute time multipliers for correct time operation.

☐ v. With +5 volts supply input, battery current should be less than approximately 15 mA, with full scale meter deflection.

9.3 Functional/Chassis Checkout

■ This procedure requires a checked out Amp/P.S. board and Processor board.

☐ a. Connect one lead of an ohmmeter to chassis ground.

☐ b. Connect other lead of ohmmeter to the Processor board cinch connector pins below to check count time switch operation. Boards are not plugged in yet.

1= open
0= shorted

COUNT TIME POSITION	PROCESSOR BOARD CINCH CONNECTOR PIN 8	30	31
0.1	0	0	0
0.2	0	0	1
0.5	1	0	0
1	1	0	1
2	0	1	0
5	0	1	1
10	1	1	0
CONT	1	1	1

☐ d. Connect external power supply and set input voltage for approximately +5 VDC.

☐ e. Turn Lamp switch to the OFF position. THR and O.L. controls to maximum clockwise position and HV to maximum counterclockwise position.

☐ f. Plug in Processor and Amp/P.S. boards and related cable connections.

☐ g. Turn instrument ON. Current draw should be less than 45 mA.

☐ h. Confirm display reads 8.8:8.8:8.8 for approximately 2 seconds, then 261010 indicating the program version.

☐ i. Connect positive voltmeter lead to pin 7 of U3 (TLC27M7IP) on the Amp./P.S. board. Connect negative lead to ground near U3.

☐ j. With the THR control full clockwise, press the THR test pushbutton and adjust R171 Volt Cal (labeled "V"), so that the front panel display reading corresponds to the voltmeter reading at pin 7 of U3.

☐ k. Connect HV meter (2500 Megohm input impedance or greater) to the junction of R32 (4.7 Meg) and R33 (1 Meg) on P.S. board.

☐ l. While pressing the HV Test pushbutton, adjust HV control until the display reads 1500. R176 Current Cal may have to be adjusted counterclockwise to defeat the Overrange function.

☐ m. Adjust R175 HV Cal on Amp/P.S. board for 1500 ±5 on external HV meter.

☐ n. Confirm HV will adjust from 50 to 2400-2500 volts. Insure HV displayed reading tracks within 2% of HV output.

☐ o. Adjust HV for approximately 1000 volts.

☐ p. Adjust R176 Current Cal (labeled "0") for approximately 0.1 volt at pin 1 of U3 (TLC27M7IP) on Amp/P.S. board.

☐ q. Connect Overrange Simulator (1000 megohm) to the detector input.

☐ r. Adjust the O.L. control counterclockwise until hyphens start flashing across display every other count interval. Disconnect Overrange Simulator and confirm overrange function is defeated. Then adjust to fully clockwise position.

☐ s. Set THR control to 100 and Window IN/OUT switch to the OUT position.

0

☐ t. Connect pulser and adjust count rate for 40,000 CPM.

☐ u. Switch Ratemeter Multiplier switch to the X100 position. Response switch to F.

☐ v. Adjust pulse amplitude above threshold until a steady count rate is observed on ratemeter.

☐ w. Adjust R40 Meter Cal (labeled MCAL) on Processor board, for 400 CPM on meter.

☐ x. Adjust pulser for 10,000 CPM and check meter for ±10% linearity of reading. Adjust pulser and rate Multiplier switch to confirm linear readings on all ranges.

☐ y. Switch SCALER/DIG. RATE switch to the SCALER position.

☐ z. Confirm count time switch operation by taking a 0.1 minute and 0.5 minute count. Colons should be observed during count cycle.

☐ aa. Check HOLD and ZERO pushbutton functions.

☐ ab. Switch SCALER/DIG. RATE switch to the DIG. RATE position and confirm update count display operation approximately every 2 seconds.

☐ ac. Connect unimorph and headset to the audio outputs and confirm audio divide and volume control functions. NOTE: Unimorph should shut off when headset is connected.

☐ ad. With the THR control adjusted for 100, adjust R174 Gain (labeled G) for 1.5 millivolt input sensitivity. Insure instrument functions at low input sensitivity without "noise". Instrument may have to be placed in can to permit "noise free" operation.

☐ ae. Set pulser pulse amplitude to 10mV.

☐ af. With THR still set at 100, fine adjust R174 Gain control until ratemeter reads 30,000 CPM with 40,000 CPM from pulser.

☐ ag. Adjust THR control for readings of 200, 300, 400, and 500 to insure the pulser input is 20, 30, 40 and 50mV respectively. Use the 3/4 CPM input setting to discriminate turn on points as in procedure above.

☐ ah. Adjust THR control back to 100.

☐ ai. Switch Window IN/OUT switch to the IN position. Adjust WIN control for 100, 200, 300, 400 and 500 to confirm 20, 30, 40 and 50mV window cut off points.

☐ aj. Set WIN back to 100 and OUT position for instrument shipment.

☐ ak. Input a full scale ratemeter count rate (500 CPM) and connect voltmeter to the recorder output. Adjust R41 (labeled RCAL) on Processor board for 1 volt.

☐ al. Check F/S ratemeter response time for 4.5 ±0.5 and 22 ±2 seconds at 90% of full scale.

☐ am. Decrease input supply voltage until periods are observed at bottom of display. Press BAT Test pushbutton and confirm low BAT Test is 4.4 ± 0.1 VDC. Adjust supply voltage back to 5 volts and confirm BAT test and actual supply input is 5 ±0.05 VDC.

☐ an. Switch SCALER/DIG. RATE switch to the SCALER position. Count Time Multiplier to CONT. Press count pushbutton and start with low enough count rate to observe each digit number count sequence from Least significant digit to MSD. Decade

pulser count rate to speed up digit segment display check.

☐ ao. Increase count rate enough to overflow counter. An "H" should be observed in the MSD flashing every count interval.

☐ ap. Turn Lamp switch to the ON position and confirm 2 lamps in the display and 2 lamps below the meter are illuminated.

☐ aq. Current draw with lamps on should be 210 ±20 mA.

☐ ar. Turn lamp OFF and current should be approximately 40 ±5 mA.

00PARTS LIST

Ref. No.	Description	Part No.
Model 2221 Portable Scaler Ratemeter		
UNIT	Completely Assembled Model 2221 Portable Scaler Ratemeter	48-2065
Amplifier/Power Supply Board, Drawing 261 X 56		
BOARD	Assembled Circuit Board	5261-072
• **CAPACITORS**		
C107	1μF, 35V, DT	04-5575
C108	2.2μF, 25V, DT	04-5559
C109	4.7μF, 10V, DT	04-5578
C110	4.7μF, 10V, DT	04-5578
C111	100μF, 10V, DT	04-5576
C112	4.7μF, 10V, DT	04-5578
C114	10pF, 100V, C	04-5573
C115	0.1μF, 100V, C	04-5521
C116	0.1μF, 100V, C	04-5521
C117	0.1μF, 100V, C	04-5521
C118	0.1μF, 100V, C	04-5521
C120	0.0022μF, 100V, P	04-5580
C121	0.001μF, 100V, C	04-5519
C122	0.1μF, 100V, C	04-5521
C123	100pF, 100V, C	04-5527
C124	0.1μF, 100V, C	04-5521
C125	0.01μF, 100V, C	04-5523
C126	47pF, 100V, C	04-5533
C127	0.1μF, 100V, C	04-5521
C128	47pF, 100V, C	04-5533
C129	100pF, 100V, C	04-5527
C130	10pF, 100V, C	04-5573
C131	0.1μF, 100V, C	04-5521
C132	10pF, 100V, C	04-5573
C133	0.0015μF, 3kV, C	04-5518
C135	0.0015μF, 3kV, C	04-5518
C136	0.0015μF, 3kV, C	04-5518
C137	100pF, 3kV, C	04-5532
C138	100pF, 3kV, C	04-5532
C139	0.0056μF, 3kV, C	04-5522

C140	0.0056μF, 3kV, C	04-5522
C141	0.0056μF, 3kV, C	04-5522
C145	1μF, 35V, DT	04-5575
C146	100μF, 10V, DT	04-5576
C147	100μF, 10V, DT	04-5576
C148	10μF, 20V, DT	04-5592
C154	0.0015μF, 3kV, C	04-5518
C164	0.1μF, 100V, C	04-5521
C165	0.1μF, 100V, C	04-5521

- **TRANSISTORS**

Q142	2N3904	05-5755
Q143	MPSU51	05-5765

- **INTEGRATED CIRCUITS**

U1	TLC27M7	06-6248
U2	LM358	06-6024
U3	TLC27M7	06-6248
U4	TLC27M7	06-6248
U5	LM331	06-6156
U6	LM2578	06-6223
U7	CA3290AE	06-6140
U8	CA3096	06-6023
U9	CA3096	06-6023
U105	CD4098	06-6066
U106	CA3096	06-6023
U144	CD4052	06-6141

- **DIODES**

CR10	IN5819	07-6306
CR12	MR-250-2	07-6266
CR13	MR-250-2	07-6266
CR14	MR-250-2	07-6266
CR15	MR-250-2	07-6266
CR16	1N4148	07-6272
CR17	1N4148	07-6272
CR18	1N4148	07-6272
CR19	1N4148	07-6272
CR20	1N4148	07-6272
CR21	1N4148	07-6272
CR22	1N4148	07-6272
CR24	1N5819	07-6306
CR25	1N5819	07-6306
CR151	MR-250-2	07-6266
CR177	1N5252	07-6265

- **RESISTORS**

R32	4.7M	10-7030
R33	1M	10-7028
R34	1M	10-7028
R35	1G	12-7686
R36	1G	12-7686
R37	0.1 OHM, 1%	12-7647
R38	10k	12-7748
R39	1M, 1%	12-7763
R40	10k	12-7748
R41	10k	12-7748
R42	10k	12-7748
R43	10k	12-7748
R44	47k	12-7758
R45	4.7k	12-7755
R46	10k	12-7748
R47	10k	12-7748
R48	10k	12-7748
R49	1k	12-7750
R50	220 OHM	12-7753
R51	220 OHM	12-7753
R52	470k	12-7757
R53	47k	12-7758
R54	1k	12-7750
R55	10k	12-7748
R56	4.7k	12-7755
R57	10k	12-7748
R58	10k	12-7748
R59	10k	12-7748
R60	1k	12-7750
R61	178k, 1%	12-7769
R62	4.7k	12-7755
R63	100k	12-7747
R64	10k	12-7748
R65	10k, 1%	12-7764
R66	220 OHM	12-7753
R68	10k	12-7748
R69	1.5k	12-7773
R70	100k, 1%	12-7765
R71	200k	12-7752
R72	200k	12-7752
R73	100k	12-7747
R74	100k	12-7747
R78	22k	12-7754
R79	10k	12-7748
R80	10k	12-7748
R81	100k	12-7557

R82	200k	12-7752
R83	22k	12-7754
R84	10k	12-7748
R85	1M	12-7763
R86	4.42k	12-7760
R87	47 OHM	12-7756
R88	100k, 1%	12-7765
R89	17.8k	12-7759
R90	10k,1%	12-7764
R91	1M, 1%	12-7763
R92	1M, 1%	12-7763
R93	40.2k, 1%	12-7761
R94	100 OHM	12-7746
R95	10k	12-7748
R96	1M, 1%	12-7763
R97	10M	12-7749
R98	1M	12-7751
R99	470k	12-7757
R100	470k	12-7757
R101	100k	12-7747
R102	1M, 1%	12-7763
R171	10k TRIMMER	09-6822
R172	100k TRIMMER	09-6823
R173	100k TRIMMER	09-6823
R174	10k TRIMMER	09-6822
R175	1M TRIMMER	09-6828
R176	1M TRIMMER	09-6828

- **TRANSFORMERS**

T103	M2300 HVPS	4275-037
T104	M2221 LVPS	4275-094

- **MISCELLANEOUS**

*	CLOVERLEAF RECEPTACLES 011-6809-00, (9EACH)	18-8771
*	SPACER #4003 #4 NYLON 3/16, (3 EACH)	18-8933
*	TRANSISTOR SPACER-423-125	18-8992
*	M2221 AMPLIFIER SHIELD	7261-100

Processor Board, Drawing 261 X 91

BOARD	Assembled Processor Board	5261-136

- **CAPACITORS**

C1	47pF, 100V, C	04-5533
C2	0.047μF, 100V, C	04-5565
C3	0.001μF, 100V, C	04-5519
C4	27pF, 100V, C	04-5614
C5	27pF, 100V, C	04-5614
C6	22μF, 15V, DT	04-5579
C7	10μF, 20V, DT	04-5592
C8	100μF, 10V, DT	04-5576
C9	100μF, 10V, DT	04-5576

- **TRANSISTOR**

Q36	2N3904	05-5755

- **INTEGRATED CIRCUITS**

U10	ICM7556	06-6244
U11	CD74HCO8	06-6222
U13	CD4054	06-6245
U14	CD4056	06-6095
U15	CD4056	06-6095
U16	CD4056	06-6095
U17	CD4056	06-6095
U18	CD4056	06-6095
U19	CD4056	06-6095
U20	CD74HC573	06-6093
U21	87C257	06-6278
U22	80C51FA	06-6236
U25	RDD104	06-6060
U26	LM358	06-6024
U43	CD74HC238	06-6246

- **DIODE**

CR45	1N4148	07-6272

- **RESISTORS**

R27	3.3k	10-7013
R28	220k	10-7066
R29	130k	10-7067

R30	470k	10-7026
R31	220k	10-7066
R32	2.2k	10-7012
R33	5.6k	10-7042
R40	1M TRIMMER	09-6828
R41	1M TRIMMER	09-6828

- **RESISTOR NETWORKS**

R34-R35	NETWORK-22k SIP 10 PIN	12-7566

- **TRANSFORMER**

T37	M300-9	4275-074

- **CRYSTAL**

Y39	6.000 MHZ	01-5209

- **CONNECTOR**

P3/1-50	RIBBON-1-102159-0	13-7834

- **MISCELLANEOUS**

*	IC-ICT-286-5-TG 28P SOCKET	06-6096
*	SPACER-816-045 16P, (7 EACH)	18-8990
*	SPACER-470-015	18-8991
*	RIBBON-102312-2 LATCH, (2 EACH)	13-7805

Calibration Board, Drawing 261 X 59

BOARD	Assembled Calibration Board	5261-075

- **VOLTAGE REFERENCES**

U1	LM385Z-1.2	05-5808
U2	LM385Z-1.2	05-5808
U3	LM385Z-1.2	05-5808

- **RESISTORS**

R4	22k	12-7754

R10	22k	12-7754
R11	100k TRIMMER	09-6813
R12	100k TRIMMER	09-6813
R13	100k TRIMMER	09-6813
R14	100k TRIMMER	09-6813

- **CONNECTOR**

P6/1-7	CONN-640457-7 MTA100	13-8183

LCD Display Board, Drawing 261 X 58

BOARD	Assembled LCD Display Board	5261-074

- **INTEGRATED CIRCUIT**

U7	3918	07-6252

- **RESISTORS**

R4	22 OHM	10-7072
R14	22 OHM	10-7072

- **CONNECTORS**

P4	RIBBON-RD6750BRN EDGE 50P	13-7816
P5	CONN-640456-2 MTA100	13-8073

- **MISCELLANEOUS**

DS10-DS13	BULB-#6833	22-9613

Backplane Board, Drawing 261 X 60

BOARD	Assembled Backplane Board	5261-076

- **DIODE**

CR6	1N5819	07-6306

- **CONNECTORS**

J1-J2	CONN-EZA22DRSN	13-8181
P7	CONN-640456-7 MTA100	13-8115

P8	CONN-1-640456-4 MTA100	13-8141
P9	CONN-640456-5 MTA100	13-8057
P10	CONN-640456-2 MTA100	13-8073
P11	CONN-1-640456-4 MTA100	13-8141

Chassis Wiring Diagram, Drawing 261 X 61

- **AUDIO**

DS1	UNIMORPH 60690	21-9251

- **CONNECTORS**

J1	CONN-640456-2 MTA100	13-8073
J2	UG706/U SERIES C	13-7751
J5	PHONE JACK TINI #42A	21-9333
J6-J7	INCLUDED ON CAL HARNESS	8261-088
J8	INCLUDED ON MAIN HARNESS	8261-087
J9	INCLUDED ON BATTERY HARNESS	8261-089
J10	NOT USED	
J11	INCLUDED ON MAIN HARNESS	8261-087

- **SWITCHES**

S1-S7	SWITCH-30-1-PB GRAYHILL	08-6517
S8-S12	SWITCH-7101-SYZ-QE TOGGLE	08-6511
SW1	SWITCH-513381	08-6656
SW2	SWITCH-513381	08-6656
SW3	MTA-206PA	08-6657

- **BATTERY**

B1-B4	1.5 VOLT "D" DURACELL	21-9313

- **RESISTORS**

R1	10k NON-LOCKING	09-6753

- **MISCELLANEOUS**

M1	M2221 METER ASSY.	4261-091

DRAWINGS AND DIAGRAMS

Amplifier/Power Supply Board Schem, Drawing 261 x 56
Amplifier/Power Supply Board Component Layout, Drawing BS261072
Processor Board Schem, Drawing 261 x 91
Processor Board Component Layout, Drawing 261 x 103
Calibration Board Schem, Drawing 261 x 59
Calibration Board Component Layout, Drawing BS261075
LED Display Board Schem, Drawing 261 x 58
LED Display Board Component Layout, Drawing BS261074
Backplane Board Schem, Drawing 261 x 60
Backplane Board Component Layout, Drawing BS261076
Wiring Diagram, Drawing 261 x 61

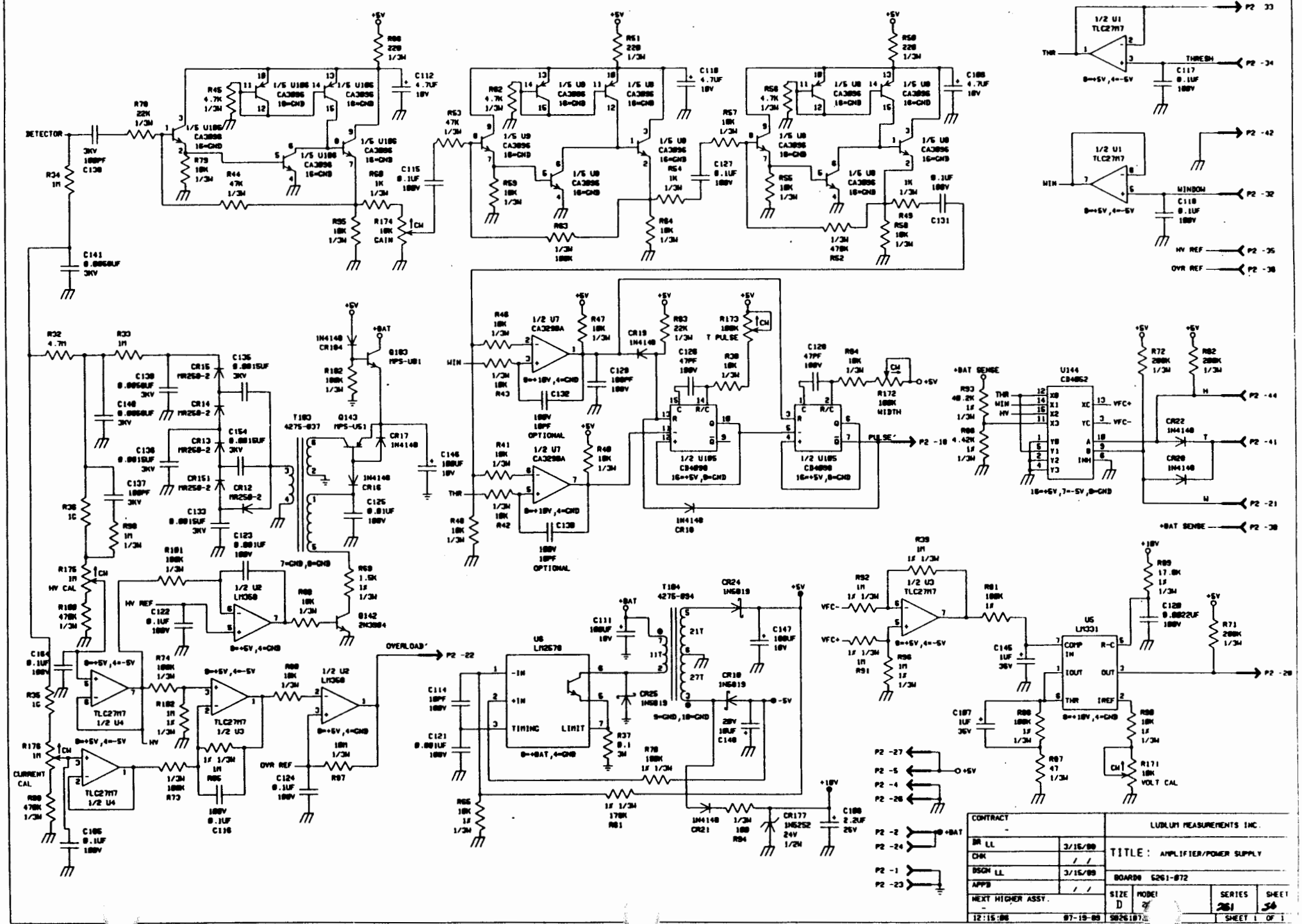
DETECTOR
R70 22K 1/3W
R34 1M
C141 0.0068UF 3KV
R45 4.7K 1/3W
R44 47K 1/3W
R79 10K 1/3W
R68 1K 1/3W
R55 10K 1/3W
R174 10K GAIN
C115 0.1UF 100V
C112 4.7UF 10V
R66 220 1/3W
R53 47K 1/3W
R62 4.7K 1/3W
R59 10K 1/3W
R63 1/3W 100K
R51 220 1/3W
C118 4.7UF 10V
R57 10K 1/3W
R54 1K 1/3W
R64 10K 1/3W
C127 0.1UF 100V
R56 4.7K 1/3W
R55 10K 1/3W
R52 1/3W 470K
R50 220 1/3W
C108 4.7UF 10V
R49 1K 1/3W
R58 10K 1/3W
C131 0.1UF 100V
1/2 U1 TLC27M7
THR
THRESH
C117 0.1UF 100V
P2 -33
P2 -34
WIN
WINDOW
C110 0.1UF 100V
P2 -42
P2 -32
HV REF
OVR REF
P2 -35
P2 -38
R32 4.7M
R33 1M
C136 0.0068UF 3KV
C140 0.0068UF 3KV
C138 0.0015UF 3KV
C137 100PF 3KV
R36 1G
R90 1M 1/3W
R175 1M HV CAL
R100 470K 1/3W
C164 0.1UF 100V
R35 1G
R176 1M CURRENT CAL
R99 470K 1/3W
C105 0.1UF 100V
CR15 MR250-2
CR14 MR250-2
CR13 MR250-2
CR151 MR250-2
CR12 MR250-2
C135 0.0015UF 3KV
C154 0.0015UF 3KV
C133 0.0015UF 3KV
C123 0.001UF 100V
T103 4275-037
7=GND,8=GND
R182 100K 1/3W
1N4148 CR104
+BAT
Q103 MPS-U01
Q143 MPS-U51
CR17 1N4148
1N4148 CR16
C125 0.01UF 100V
R69 1.5K 1/3W
Q142 2N3904
C146 100UF 10V
R101 100K 1/3W
1/2 U2 LM358
HV REF
C122 0.1UF 100V
R88 10K 1/3W
R74 100K 1/3W
R102 1M 1/3W
TLC27M7 1/2 U4
TLC27M7 1/2 U3
1/2 U2 LM358
R80 10K 1/3W
1M 1/3W
R97
OVR REF
C124 0.1UF 100V
R73 1/3W 100K
R95 1K 1/3W
C116 100V 0.1UF
OVERLOAD'
P2 -22
R46 10K 1/3W
R43 1/3W 10K
1/2 U7 CA3290A
C132 100V 10PF OPTIONAL
R47 10K 1/3W
C129 100PF 100V
R41 10K 1/3W
R42 1/3W 10K
C130 100V 10PF OPTIONAL
R48 10K 1/3W
CR19 1N4148
R83 22K 1/3W
R173 100K T PULSE
C128 47PF 100V
R38 10K 1/3W
1/2 U10B CD4098
CR18 1N4148
C120 47PF 100V
R84 10K 1/3W
R172 100K WIDTH
PULSE'
P2 -18
+BAT SENSE
R93 40.2K 1/3W
R86 4.42K 1/3W
U144 CD4052
VFC+
VFC-
R72 200K 1/3W
R82 200K 1/3W
CR22 1N4148
CR20 1N4148
P2 -44
P2 -41
P2 -21
P2 -38
R39 1M 1/3W
R92 1M 1/3W
1/2 U3 TLC27M7
R81 100K
R96 1M 1/3W
R91 1M
C146 1UF 35V
U5 LM331
COMP IN
IOUT
THR
R-C
OUT
IREF
R71 200K 1/3W
C128 0.0022UF 100V
R89 17.8K 1/3W
C107 1UF 35V
R98 100K 1/3W
R87 47 1/3W
R88 10K 1/3W
R171 10K VOLT CAL
P2 -20
T104 4275-034
CR24 1N5819
C147 100UF 10V
CR10 1N5819
C111 100UF 10V
U6 LM2576
-IN
+IN
TIMING
LIMIT
C114 10PF 100V
C121 0.001UF 100V
CR25 1N5819
R37 0.1 3W
R76 100K 1/3W
R65 10K 1/3W
R81 1/3W 170K
CR21 1N4148
R94 1/3W 100
CR177 1N5252 24V 1/2W
C109 2.2UF 25V
P2 -27
P2 -5
P2 -4
P2 -26
P2 -2
P2 -24
P2 -1
P2 -23
CONTRACT
LUDLUM MEASUREMENTS INC.
DR LL 3/16/89
CHK / /
DSGN LL 3/16/89
APPD / /
TITLE: AMPLIFIER/POWER SUPPLY
BOARD# 5261-072
NEXT HIGHER ASSY.
SIZE D
MODEL
SERIES 261
SHEET 56
12:15:06 07-19-89
SHEET 1 OF 1

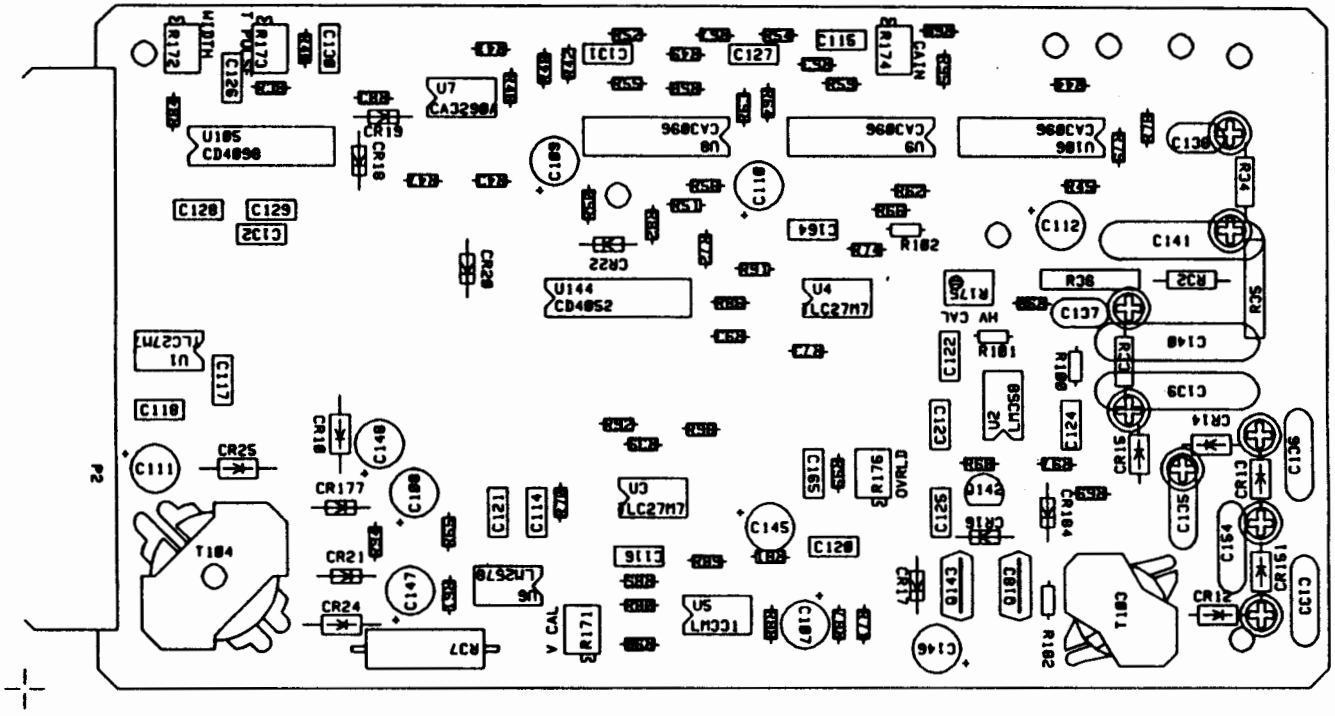

BOARD# 5261-072	
TITLE AMPLIFIER/POWER SUPPLY	
MODEL 2221	
COMPONENT OUTLINES	
DR RDS	4/7/89
CHK	/ /
DSGN LL	3/15/89
APPD	/ /
B:BS261072.DRW	
07-19-89	15:32:24

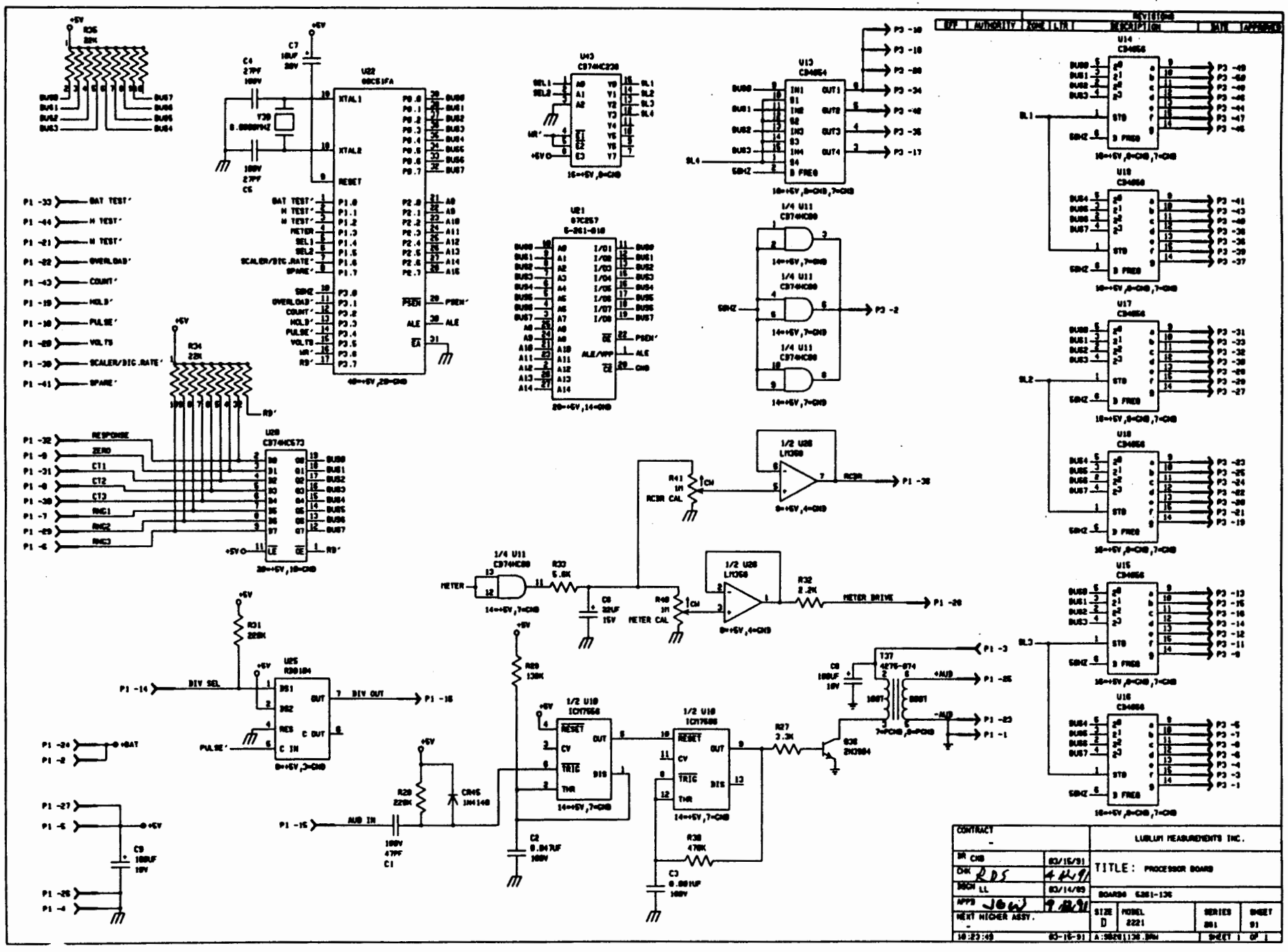
REVISIONS
REF | AUTHORITY | ZONE | LTR | DESCRIPTION | DATE | APPROVED
U22 68C51FA
XTAL1
XTAL2
RESET
U43 CD74HC238
U13 CD4054
U14 CD4056
U19 CD4056
U17 CD4056
U18 CD4056
U15 CD4056
U16 CD4056
U21 87C257
U20 CD74HC573
U25 MC14584
1/4 U11 CD74HC00
1/2 U26 LM358
1/2 U10 ICM7556
T37 4270-074
Q36 2N3904
R41 1M RCBR CAL
R40 1M METER CAL
R33 5.6K
R32 2.2K
METER DRIVE
R31 220K
R29 130K
R28 220K
CR45 1N4148
R27 3.3K
R38 470K
C2 0.047UF 100V
C3 0.001UF 100V
C8 100UF 10V
C9 100UF 10V
C1 100V 47PF
C4 27PF 100V
C5 100V 27PF
C7 10UF 20V
R36 20K
R34 22K
R9'
BAT TEST'
H TEST'
OVERLOAD'
COUNT'
HOLD'
PULSE'
VOLTS
SCALER/DIC.RATE'
SPARE'
RESPONSE
ZERO
CT1
CT2
CT3
RNG1
RNG2
RNG3
DIV SEL
DIV OUT
AUD IN
+AUD
-AUD
CONTRACT
LUBLIN MEASUREMENTS INC.
TITLE: PROCESSOR BOARD
DR CHB 03/15/91
CHK RDS
DSGN LL 03/14/89
APPD
NEXT HIGHER ASSY.
SIZE D
MODEL 2221
SERIES 881
SHEET 91
10:23:49 03-15-91
A:\8821130.DWG
SHEET 1 OF 1

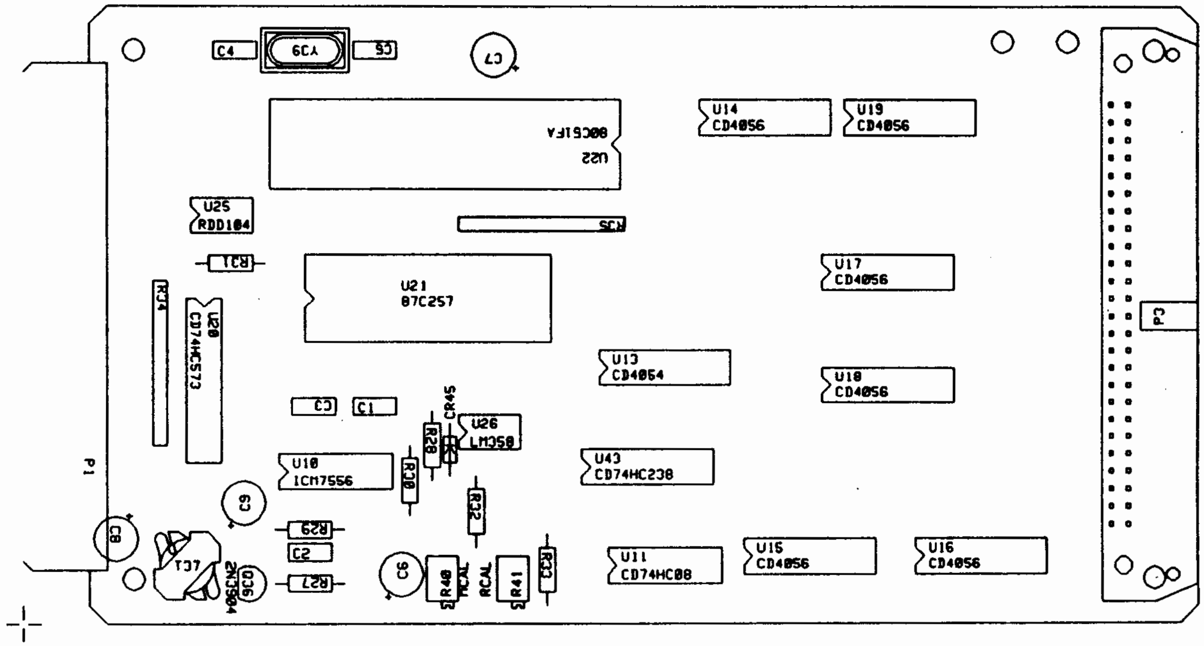

LUDLUM MEASUREMENTS INC. SWEETWATER, TX.				
DR CKB	03/15/91	TITLE: PROCESSOR BOARD		
CHK	/ /	BOARD# 5261-136		05261136
DSGN LL	03/14/91	MODEL 2221	SERIES 261	SHEET 103
APP		COMP ARTWORK ☐	SLDR ARTWORK ☐	
09:19:04	29-Mar-94	COMP OUTLINE ☒	SLDR OUTLINE ☐	
COMP PASTE ☐	COMP MASK ☐	SLDR PASTE ☐	SLDR MASK ☐	

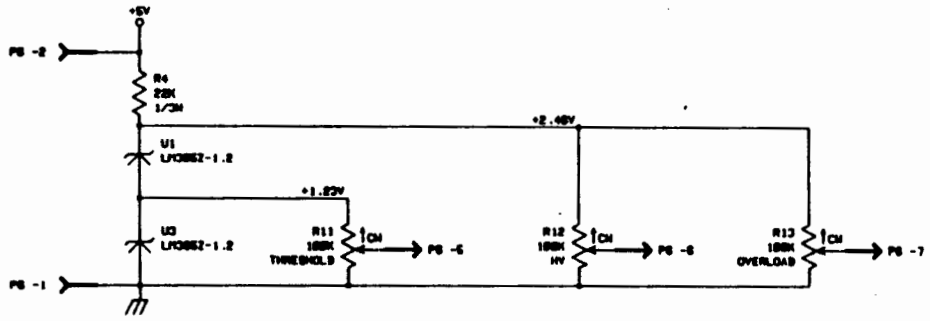

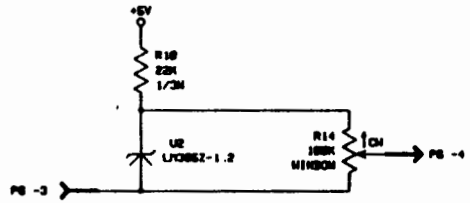

CONTRACT -		LUBLIN MEASUREMENTS INC.
DR LL	3/16/90	TITLE: CALIBRATION BOARD
CHK	/ /	
DSGN LL	3/16/90	BOARD# 5261-076
APPS	/ /	SIZE D · MODEL 2221 · SERIES 261 · SHEET 59
NEXT HIGHER ASSY. -		
16:50:36	07-19-90	6:\DOCS\07\ · SHEET 1 OF 1

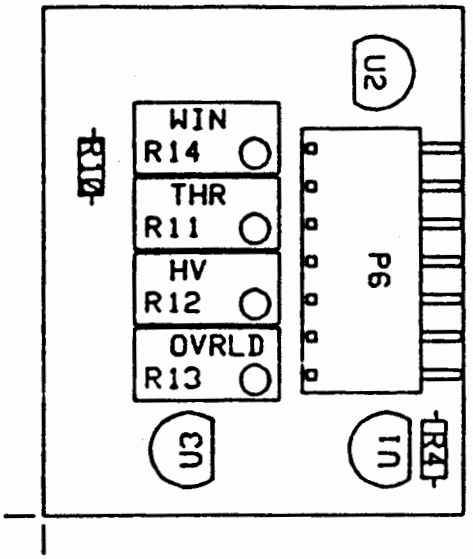

BOARD# 5261-Ø75	
TITLE CAL BOARD	
MODEL 2221	
COMPONENT OUTLINES	
DR RDS	3/28/89
CHK	/ /
DSGN LL	3/16/89
APPD	/ /
BS261Ø75.DRW	
Ø5-2Ø-89	Ø7:38:12

EFF	AUTHORITY	ZONE	LTR	DESCRIPTION	DATE	APPROVED

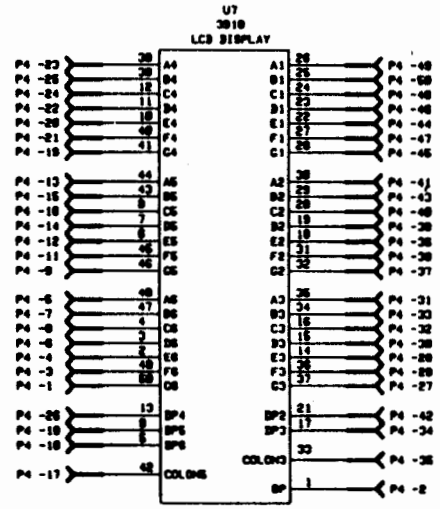

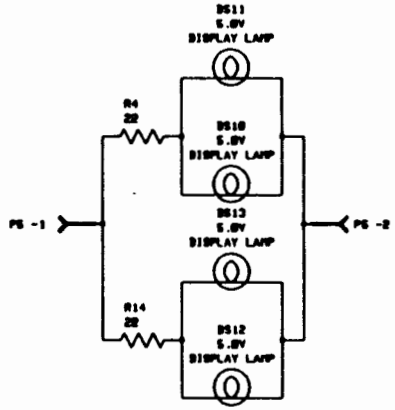

CONTRACT -		LUBLIN MEASUREMENTS INC.
DR LL	3/16/88	TITLE: LCD DISPLAY
CHK	/ /	
DSGN LL	3/16/88	BOARD 5261-074
APPD	/ /	
NEXT HIGHER ASSY. -		SIZE D · SERIES 261 · SHEET 50
15:14:38	06-12-88	SHEET 1 OF

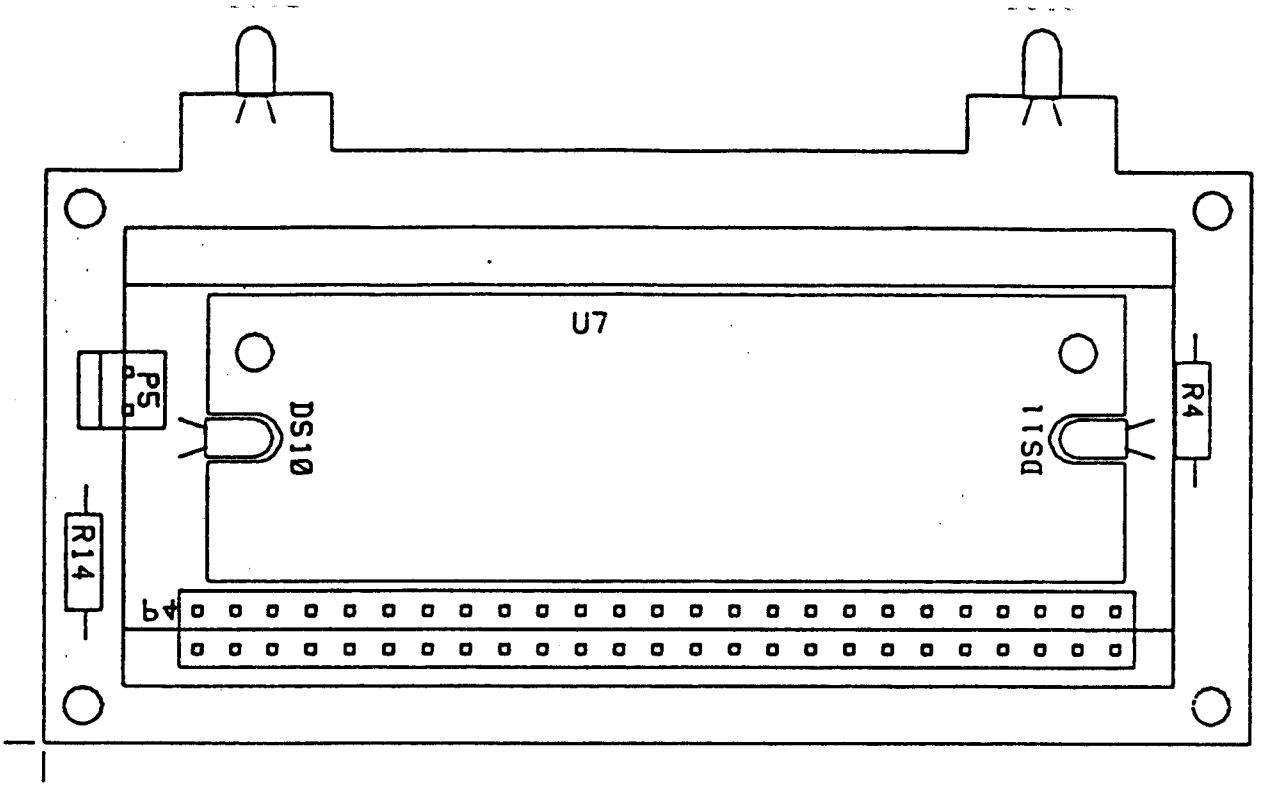

BOARD# 5261-074	
TITLE DISPLAY BOARD	
MODEL 2221	
COMPONENT OUTLINES	
DR -	3/27/89
CHK	/ /
DSGN LL	3/16/89
APPD	/ /
BS261074.DRW	
05-24-89	15:44:20

EFF	AUTHORITY	ZONE	LTR	REVISIONS DESCRIPTION	DATE	APPROVE

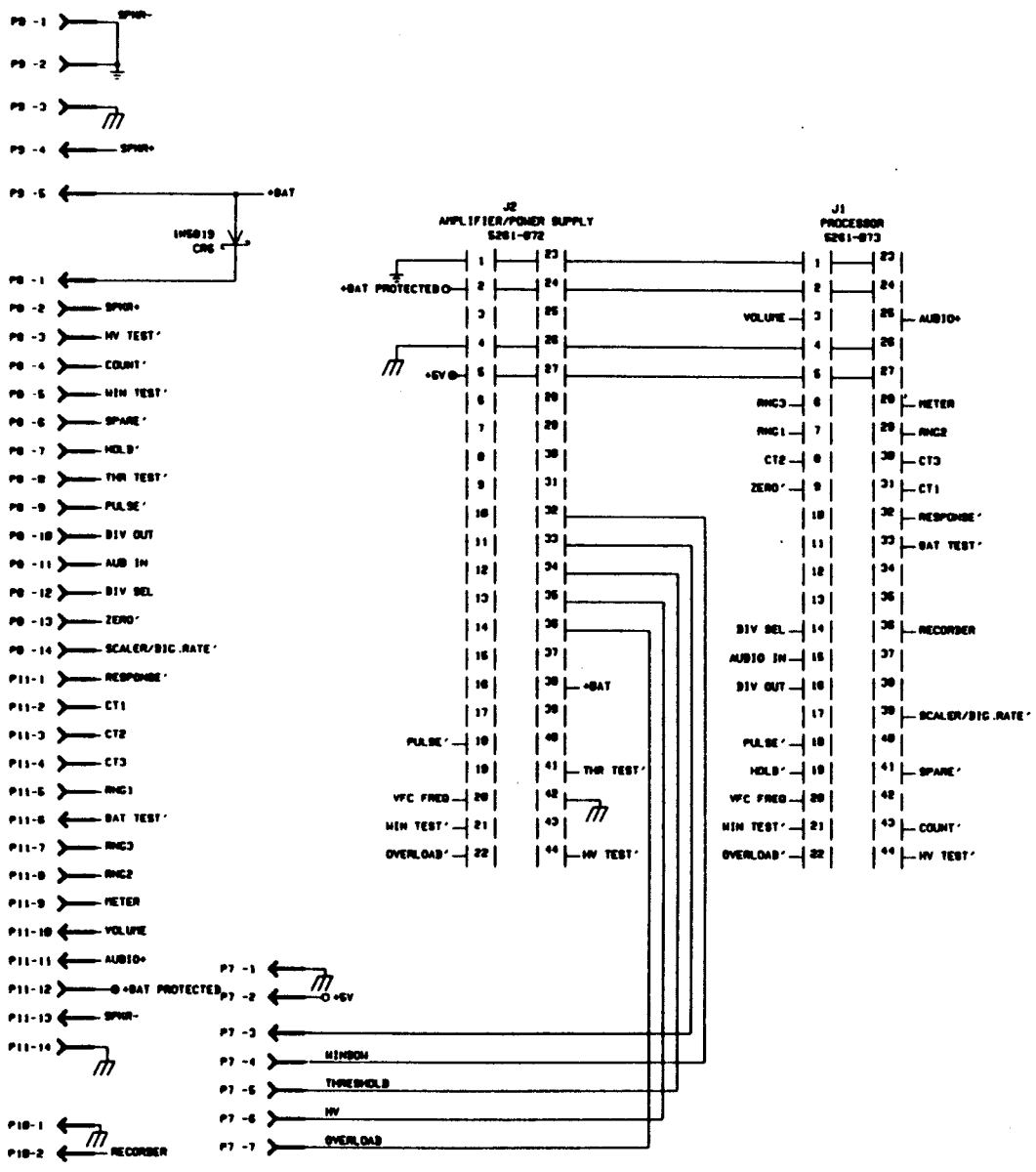

CONTRACT -		LUBLIN MEASUREMENTS INC.
DR LL	3/16/88	TITLE: BACKPLANE
CHK	/ /	
DSGN LL	3/16/88	BOARD -070
APPD	/ /	
NEXT HIGHER ASSY. -		SIZE D · SERIES 261 · SHEET 60
07:46:14	06-24-88	5261070 DWG · SHEET 1 OF 1

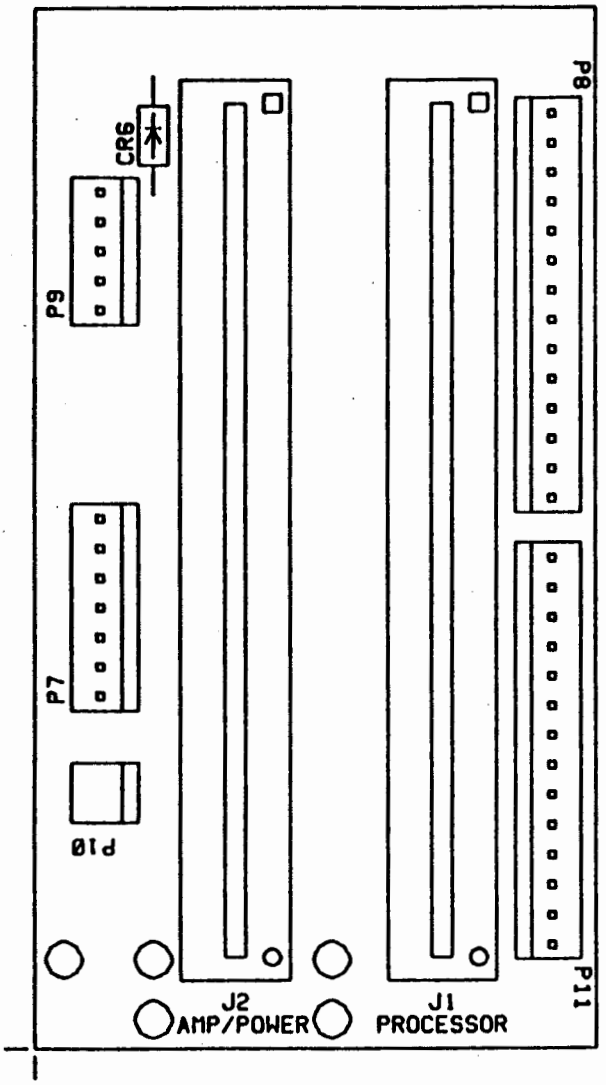

BOARD# 5261-076	
TITLE BACKPLANE	
MODEL 2221	
COMPONENT OUTLINES	
DR RDS	3/28/89
CHK	/ /
DSGN LL	3/16/89
APPD	/ /
BS261076.DRW	
05-24-89	15:15:37

REVISIONS						
EFF	AUTHORITY	ZONE	LTR	DESCRIPTION	DATE	APPROVED

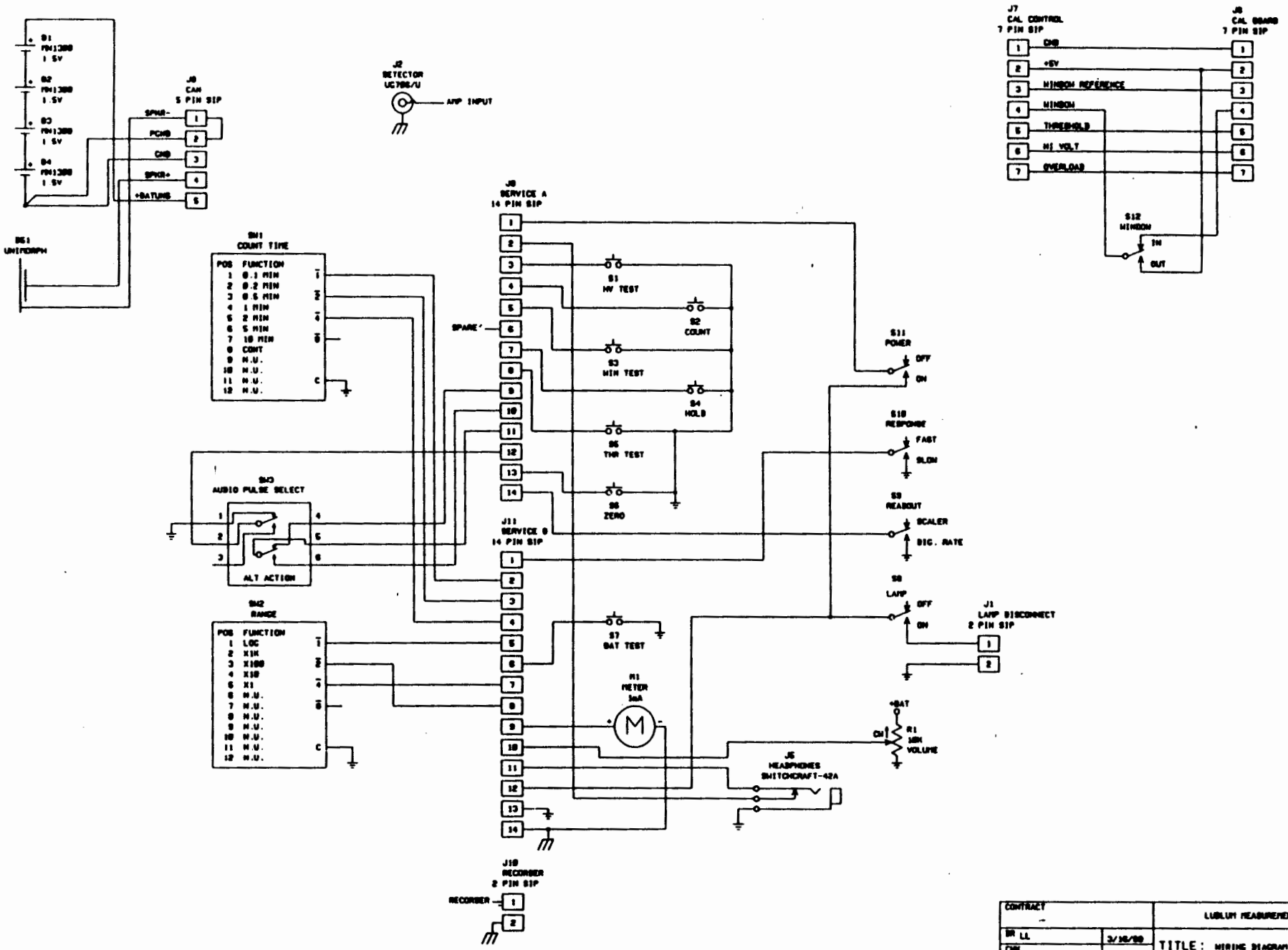

CONTRACT -		LUDLUM MEASUREMENTS INC.
DR LL	3/16/88	TITLE: WIRING DIAGRAM
CHK	/ /	
DSGN LL	3/16/88	BOARD 281-077
APPD	/ /	
NEXT HIGHER ASSY. -		SIZE D · MODEL 2221 · SERIES 281 · SHEET 01
10:41:06	06-20-88	SHEET 1 OF 1

INSTRUCTION MANUAL

LUDLUM MODEL 44-10

HIGH ENERGY GAMMA DETECTOR

Revised JANUARY 1995

LUDLUM MEASUREMENTS, INC.
P.O. Box 810 / 501 Oak Street
SWEETWATER, TEXAS 79556
Phone: 800-622-0828(USA), 915-235-5494 Fax: 915-235-4672

Serving The Nuclear Industry Since 1962

LUDLUM MODEL 44-10

HIGH ENERGY GAMMA DETECTOR

Revised JANUARY 1995

LUDLUM MEASUREMENTS, INC.
501 OAK ST., P.O. BOX 810
SWEETWATER, TX 79556
915/235-5494 FAX: 915/235-4672

WARRANTY CERTIFICATE

Ludlum Measurements, Inc. warrants the products covered in this instruction manual to be free of defects due to workmanship, materials, and design for a period of twelve months from the date of delivery. The calibration of a product is warranted to be within its specified accuracy limits at the time of shipment. In the event of instrument failure, notify Ludlum Measurements to determine if repair, recalibration, or replacement is required.

This warranty excludes the replacement of photomultiplier tubes, G-M and proportional tubes, and scintillation crystals which are broken due to excessive physical abuse or used for purposes other than those intended.

There are no warranties, expressed or implied, including without limitation any implied warranty of merchantability or fitness, which extend beyond the description of the face thereof. If the product does not perform as warranted herein, purchaser's sole remedy shall be repair or replacement, at the option of Ludlum Measurements. In no event will Ludlum Measurements be liable for damages, lost revenue, lost wages, or any other incidental or consequential damages arising from the purchase, use, or inability to use the product.

RECEIVING CONDITION EXAMINATION

Be sure to verify that the shipping carton is received in good condition with no visible damage. Should the instrument be received in a damaged condition, save the shipping container and the packing material and request an immediate inspection by the carrier.

RETURN OF GOODS TO MANUFACTURER

If equipment needs to be returned to Ludlum Measurements, Inc. for repair or calibration, please send to the address below. All shipments should include documentation containing return shipping address, customer name, telephone number, description of service requested, and all other necessary information. Your cooperation will expedite the return of your equipment.

LUDLUM MEASUREMENTS, INC.
ATTN: REPAIR DEPARTMENT
501 OAK STREET
SWEETWATER, TX 79556
915-235-5494
FAX 915-235-4672

M44-10 HIGH Energy Gamma Detector

1. GENERAL

The Ludlum Model 44-10 utilizes a 2 inch by 2 inch NaI (Tl) crystal for high energy gamma detection (approximately 60 keV to 2 MeV range). The detector also provides high sensitivity for surveying and pulse height discrimination for single channel or multichannel applications .

2. SPECIFICATIONS:

- **VOLTAGE:** 500 volts to 1200 volts maximum
- **HIGH VOLTAGE:** Variances in HV are due to instrument input sensitivity, cable length, photomultiplier tubes (PMT) and applications
- **SCINTILLATOR:** 2 inch (5.1cm) diameter by 2"(5.1cm) thick NaI(Tl) crystal
- **SENSITIVITY:** Typically 900 cpm/μR/hr(137Cs gamma)
- **CURRENT DRAIN:** 20 micro Amps at 1000 volts
- **PHOTOMULTIPLIER TUBE:** 2 inch (5.1cm) diameter, end window with 10 stage dynode chain at approximately 62.25 meghoms
- **CONNECTORS:** Standard series "C"; other types available upon request
- **SIZE:** 6.6cm (2.6cm) diameter by 27.9cm (11") long
- **CONSTRUCTION:** Aluminum housing with beige polyurethane enamel paint
- **WEIGHT:** 1.1kg (2.3lbs.)

3. MAINTENANCE

- Remove four screws securing the connector cap and remove from the main body.
- Carefully slide the PMT and crystal assembly out of the main housing.
- Separate the crystal from the PMT by sliding the crystal off to the side of the PMT.
- Clean the coupling grease off of the PMT and Crystal.

Apply 1/3 teaspoon coupling grease to the PMT.

- Place the crystal on the PMT and press firmly to evenly spread coupling grease out to the edge of the PMT.
- Replace the PMT and crystal assembly in the main housing. Secure the connector cap.

NOTE

Replacing the PMT requires the tube shield to be removed from the malfunctioning PMT and placed on the new PMT.

PARTS LIST

Ref.	Description	Part No.

MODEL 44-10 HIGH ENERGY GAMMA DETECTOR

UNIT	Completely Assembled Model 44-10 High Energy Gamma Detector	47-1540
*	Photomultiplier Tube	01-5042
*	2x2 inch Diameter Crystal	01-5128
*	O'Ring	16-8289
*	Tube Socket	5002-233
*	HV Wire (White Teflon)	21-9362
*	Ground Wire	21-9413
*	Foam Pads	7260-001-05
*	Connector Cap	7260-002-01
*	Connector Series "C"	13-7751
*	4-40 x 3/16 FH Screw	17-8811
*	Optical Coupling Grease	03-5374

TUBE SOCKET BOARD, DRAWING 2 X 179

BOARD	Assembled Tube Socket	5002-233
•	**CAPACITORS**	
C1	0.01μF, 2kV, C	04-5525
•	**RESISTORS**	
R1-R11	4.75 MEG, 1%	10-7100
R12	10 MEG, 1%	10-7102
•	**MISCELLANEOUS**	
13 EA.	CONTACT-003-1381-003	01-5245

DRAWINGS AND DIAGRAMS

Assembled Tube Socket Board, Drawing 2 x 179
Assembly View, Drawing 260 x 31

M44-10 HIGH Energy Gamma Detector

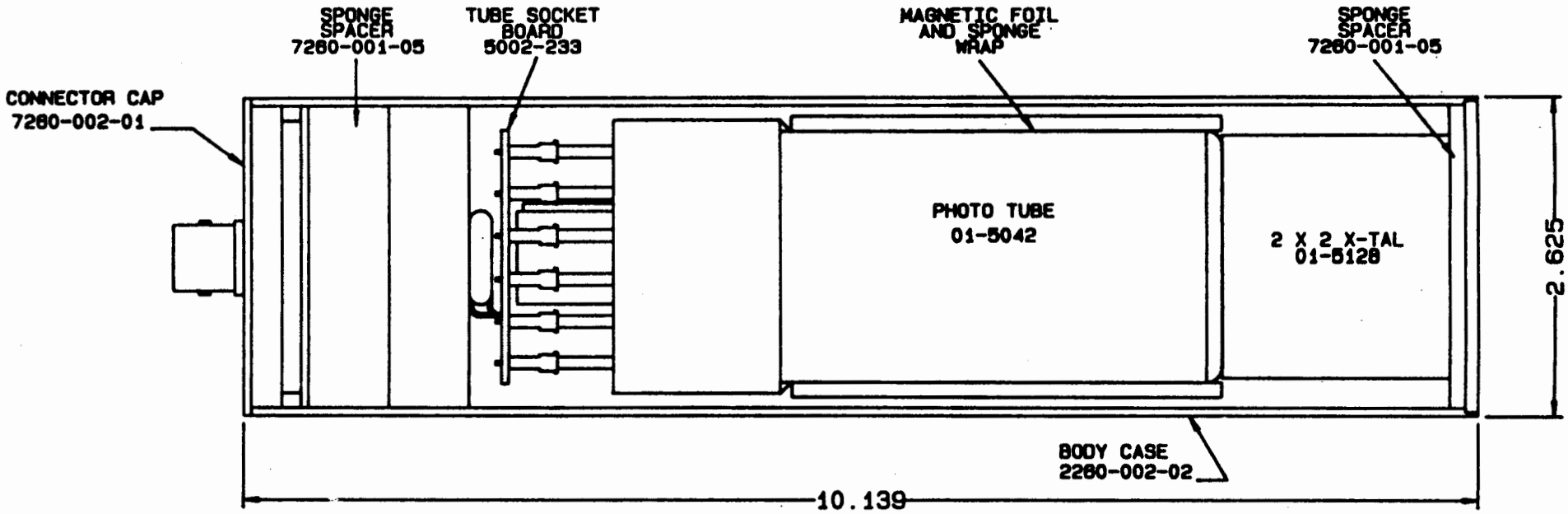

DESC: ASSEMBLY VIEW	
MODEL: 44-10	
PART #: 4260-066	
DWN: CKB	DATE: 02/01/95
DSGN:	DATE:

CKB 01/28/92			
TOL:		SCALE:	
TITLE MODEL 44-10 HI. ENERGY GAMMA DET.			
LUDLUM		200	31

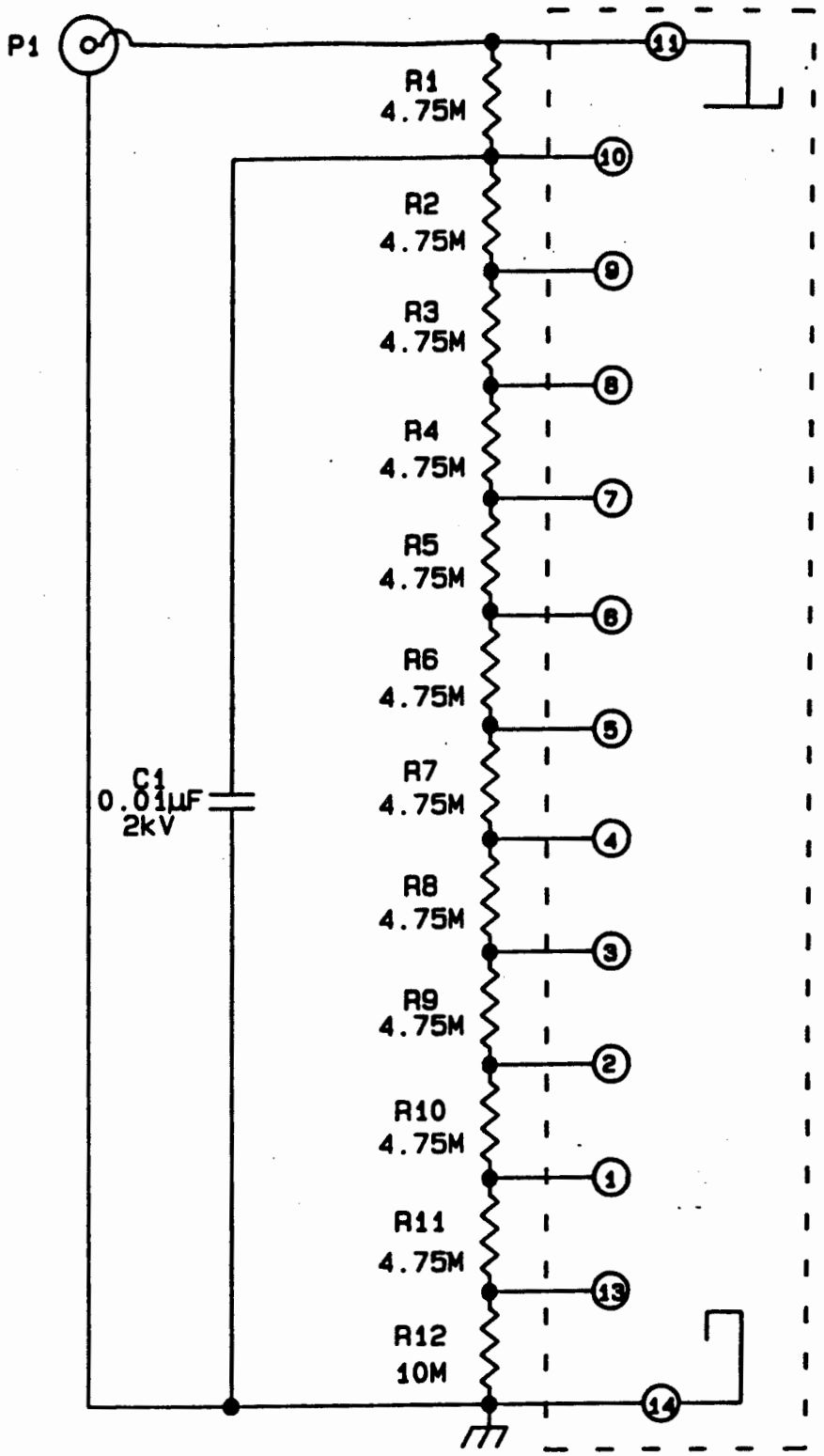

DESC: 2" TUBE SOCKET BD.	
MODEL: N/A	
PART #: 5002-233	
DWN: BK	DATE: 3-23-92
DSGN:	DATE:

CHG NO.				DWN	CHK	APP
DWN BK	DATE 3-23-92	CHK	DATE 2/1/95	APP	DATE
TOL:			SCALE:		
TITLE 2" TUBE SOCKET BOARD					
LUDLUM					

ATTACHMENT 2

BG Soil - Data list for EPA

Sample ID	SAMPLE DESCRIPTION	Horizon	Included	Location	Aluminium-3050	Aluminium-TOTAL	Antimony-3050	Antimony-TOTAL	Arsenic-3050	Arsenic-TOTAL	Barium-3050	Barium-TOTAL	Beryllium-3050	Beryllium-TOTAL	Cadmium-TOTAL	Cadmium-3050	Calcium-3050	Calcium-TOTAL	Chlorine-	Chromium-3050
FS2000	ULAC-08	A	Yes	ULAC	6500	69530	<5	<0.385	1.8	<3.977	160	314.2	0.69	2.1	<1	<0.4	4500	5988	17.6	4.6
FS2002	TA-49 CB-08	C	Yes	TA-49	13000	87080	<5	0.47	3.1	4.756	120	629	0.8	2.85	<1	<0.4	2800	14190	303	8
FS2004	TA-49 BW-02	B	Yes	TA-49	30000	88760	<5	0.283	5.7	2.236	290	553.2	1.7	2	<1	<0.4	4200	12430	30.4	16
FS2005	TA-49 Bwk-04	B	Yes	TA-49	23000	85100	<5	0.431	4.8	4.864	250	697.5	1.2	2.45	<1	<0.4	7500	18940	56.5	12
FS2010	EGG Btb-06	B	Yes	EGG	19000	75150	<5	0.268	5	2.06	140	258.6	1.3	2.7	<1	<0.4	3200	5410	12.8	11
FS2011	EGG Bw-03	B	Yes	EGG	15000	68240	<5	0.313	3.3	1.534	85	230.5	1.1	1	<1	<0.4	1900	3675	17.3	9
FS2012	EGG CB-04	C	Yes	EGG	16000	71800	<5	0.541	3.8	2.532	93	319.1	1.2	2.6	<1	<0.4	2700	4882	19.7	10
FS2013	EGG Bt-02	B	Yes	EGG	17000	73520	<5	0.451	3.9	2.514	110	387.1	1.2	2.4	<1	<0.4	2000	5598	14.6	11
FS2021	EGG A-01	A	Yes	EGG	6700	67700	<5	0.366	1.4	2.804	58	279.9	0.69	2.6	<1	<0.4	1300	4238	14	4.4
FS2022	EGG CBb-07	C	Yes	EGG	12000	71290	<5	0.707	3.8	4.995	140	542.5	1	2.7	<1	<0.4	2500	6782	44.7	8
FS2023	EGG C-05	C	Yes	EGG	14000	73390	<5	0.27	2.7	3.645	120	386.2	1	3.4	<1	<0.4	3700	7088	38.3	8.4
FS2027	TA-16-10 BW	B	Yes	TA-16	13000	58090	<5	0.967	4.7	7.561	100	587.8	0.68	1.6	<1	<0.4	1600	4454	17.1	11
FS2028	TA-69 Bt2	B	Yes	TA-69	39000	91170	<5	1.009	9.3	8.505	140	634.5	1.8	2.3	<1	<0.4	4100	5156	59.5	21
FS2031	TA-69 South 24 C1 Bt	C	Yes	TA-69	20000	68400	<5	1.108	5.4	7.642	220	764	1	1.7	<1	<0.4	1800	2010	16.7	13
FS2032	TA-39-36-A1	A	Yes	TA-39	14000	60890	<5	0.473	4.2	2.993	130	463.7	0.8	1.8	<1	<0.4	2000	6357	14.6	12
FS2034	TA-39-40 Bwkb	B	Yes	TA-39	20000	71260	<5	0.597	4.5	4.206	230	610.8	1.2	2	<1	<0.4	6400	10230	15.2	14
FS2038	TA-69 South Br	B	Yes	TA-69	37000	79110	<5	1.146	7.9	3.255	280	288	1.5	2.2	<1	<0.4	8500	12000	40.6	17
FS2039	TA-69 Crb	C	Yes	TA-69	12000	81180	<5	<0.428	2.4	<5.206	35	374.5	0.9	2.1	<1	<0.4	1700	<3002	20	8.7
FS2040	TA-69 BC	B	Yes	TA-69	25000	92220	<5	0.64	5.4	4.901	730 (X)	558.7	1	2.3	<1	<0.4	3200	5365	200	11
FS2043	TA-69-07N 2Bt3b	B	Yes	TA-69	33000	99700	<5	0.533	8.3	3.711	340	356.2	2.2	3.1	<1	<2	5300	5742	109	16
FS2044	TA-69S-23 2Bt2b	B	Yes	TA-69	25000	79360	<5	0.718	6.1	7.328	160	543.6	1.4	2.2	<1	<2	2700	5520	13.7	19
FS2045	TA-69S-19 A	A	Yes	TA-69	9200	54510	<5	0.884	5.4	5.349	100	614.9	0.75	1	<1	<2	1800	5468	14.8	11
FS2046	TA-39-S-41 Btkb	B	No	TA-39	61000	101800	<5	0.638	11.2	7.737	320	247.7	4	3.8	<1	2.7	14000	12860	53.4	37
FS2046D1	LAB REP	B	No	TA-39	62000	NA	<0.1	NA	5.7	NA	320	NA	3.9	NA	NA	2.5	14000	NA	NA	36
FS2046-AVE	Average of FS2046,FS2046D1	B	Yes	TA-39	61500	101800	<5	0.638	8.45	7.737	320	247.7	3.95	3.8	<1	2.6	14000	12860	53.4	36.5
FS2047	TA-39-S-41 Btkb, FS-2046 Duplicate	B	Yes	TA-39	NA	99140	NA	0.807	NA	8.812	NA	495.3	NA	4	1.2	NA	NA	13990	NA	NA
FS2052	TA-69 AE	A	Yes	TA-69	9500	52940	<5	0.606	5.3	5.111	100	548.8	0.77	1.4	<1	1.4	1300	3605	14.3	12
FS2053	TA-39-37-A2	A	Yes	TA-39	15000	59180	<5	<0.341	3.9	5.042	130	502.1	1	1.6	<1	<0.4	2200	6453	12.9	16
FS2054	TA-16-A-09	A	Yes	TA-16	23000	76830	<5	0.524	5.2	3.361	190	579.7	1.2	2	<1	<0.4	3000	9582	18.6	13
FS2056	TA-69-N-09-2Bt1b	B	Yes	TA-69	43000	85930	<5	1.033	7.3	9.799	130	511.2	2	2.1	<1	<0.4	4500	8274	27.3	26
FS2057	TA-39-39-Bwkb	B	No	TA-39	25000	69410	<5	0.768	4.9	5.757	370	742.2	1.3	2	<1	0.6	9700	12840	39.1	18
FS2058	TA-39-39-Bwkb, FS-2057 Duplicate	B	No	TA-39	NA	69080	NA	0.435	NA	4.482	NA	520.6	NA	1.9	<1	NA	NA	13460	NA	NA
FS2057-AVE	Average of FS2057,FS2058	B	Yes	TA-39	25000	69245	<5	0.6015	4.9	5.1195	370	631.4	1.3	1.95	<1	0.6	9700	13150	39.1	18
FS2059	TA-69Cr	C	Yes	TA-69	14000	80410	<5	<0.507	2.9	2.933	30	282.2	0.9	2.3	<1	<0.4	2000	4277	18.2	7.3
FS2060	TA-39-42-2Cr	C	Yes	TA-39	33000	74310	<5	0.656	6.7	4.918	410	624.1	1.5	2.8	<1	<0.4	87000 (X)	80380	168	16
FS2061	TA-39-38-Bt	B	Yes	TA-39	30000	69310	<5	<0.247	5.2	3.117	210	291.7	1.6	2.2	<1	<0.4	4000	6917	13.6	21
FS2065	TA-69 Bt3	B	Yes	TA-69	24000	111100	<5	0.836	6.9	6.783	140	335.7	1.4	1.95	<1	<0.4	5600	8155	168	9.5
FS2066	TA-69-S-20 Bw	B	Yes	TA-69	7000	57940	<5	0.75	3.9	5.141	84	651.1	0.54	1.6	<1	<0.4	1300	4063	12.3	6.6
FS2067	TA-69 Bt1	B	Yes	TA-69	33000	94440	<5	0.935	9.2	8.934	88	292.3	1.9	3	<1	<0.4	4000	5911	23.9	19
FS2068	TA-69-S-22 2Bt1b	B	No	TA-69	27000	84170	<5	0.718	7	8.97	160	526.6	1.2	2.1	<1	<0.4	2800	5924	14.8	17
FS2068D1	TA-69-S-22 2Bt1b, FS-2068 Duplicate	B	No	TA-69	NA	85230	<0.2	1.222	7.7	8.55	NA	665.8	NA	1.9	<1	NA	NA	4387	NA	NA
FS2068-AVE	Average of FS2068,FS2068D1	B	Yes	TA-69	27000	84700	<5	0.97	7.35	8.76	160	596.3	1.2	2	<1	<0.4	2800	5155.5	14.8	17
FS2077	BSS-TS-06-01 AC Tsankawi	A	Yes	TSK	3500	63930	<5	<0.338	0.8	<3.362	27	163.9	0.31	3.2	<1	<0.4	1100	4497	16.4	1.9
FS2078	BSS-TS-06-02 C1 Tsankawi	C	Yes	TSK	4400	67570	NA	<0.253	0.7	1.195	31	234.6	0.42	4.3	<1	<0.4	900	4988	58.9	2.1
FS2079	BSS-TS-06-03 C2 Tsankawi	C	Yes	TSK	3700	<1524	<5	<0.246	0.9	1.586	35	235.1	0.32	4.4	<1	<0.4	1500	<1114	15.7	2
FS2080	AC-1 A2	A	Yes	AC	2100	54000	<0.9	0.6	1	5	45	200	0.07	1.4	NA	NA	610	4600	24	2.5
FS2080D1	AC-1 A2	A	No	AC	2600	NA	<0.9	0.5	NA	NA	32	NA	0.14	NA	NA	NA	730	NA	NA	4.7
FS2080D2	AC-1 A2	A	No	AC	NA	NA	NA	NA	NA	NA	NA	NA	NA	NA	NA	NA	NA	NA	NA	NA
FS2080-AVE	Average of FS2080,FS2080D1,FS2080D2	A	Yes	AC	2350	54000	<0.9	0.55	1	5	38.5	200	0.105	1.4	NA	NA	670	4600	24	3.6
FS2081	AC-1 Btb	B	No	AC	6400	61000	<0.9	1	2	5	99	360	0.59	2.9	NA	NA	2100	5800	246	5.1
FS2081D1	AC-1 Btb	B	No	AC	NA	NA	NA	NA	NA	NA	NA	NA	NA	NA	NA	NA	NA	NA	NA	NA
FS2081-AVE	Average of FS2081,FS2081D1	B	Yes	AC	6400	61000	<0.9	1	2	5	99	360	0.59	2.9	NA	NA	2100	5800	246	5.1
FS2082	AC-1 Bw1	B	Yes	AC	7100	56000	<0.9	1.1	3	7	91	360	0.63	2.1	NA	NA	1700	5000	24.5	6.1
FS2083	AC-1 Bw2	B	No	AC	6300	56000	<0.9	1	2	4	81	390	0.56	1.8	NA	NA	1500	5300	24	9.2
FS2083D1	AC-1 Bw2	B	No	AC	NA	NA	NA	NA	4	4	NA	NA	NA	NA	NA	NA	NA	NA	NA	NA
FS2083-AVE	Average of FS2086,FS2086D1	C	Yes	AC	2500	55000	<0.9	0.5	4	13	28	240	<0.08	1	NA	NA	610	4900	31	3.7
FS2084	AC-1 Bw3	B	Yes	AC	4000	53000	<0.9	0.9	2	5	60	340	0.25	1.3	NA	NA	1100	5900	27	6.6
FS2085	AC-1 Bwb	B	Yes	AC	7500	61000	<0.9	1.1	3	13	92	300	0.6	2.8	NA	NA	1800	5400	235	6.2
FS2086	AC-1 C	C	No	AC	2500	55000	<0.9	0.5	1	13	28	240	<0.08	1	NA	NA	610	4900	31	3.7
FS2086D1	AC-1 C	C	No	AC	NA	NA	NA	NA	7	NA	NA	NA	NA	NA	NA	NA	NA	NA	NA	NA
FS2086-AVE	Average of FS2086,FS2086D1	C	Yes	AC	2500	55000	<0.9	0.5	4	13	28	240	<0.08	1	NA	NA	610	4900	31	3.7
FS2087	AC-1 C1	C	Yes	AC	1900	52000	<0.9	1.2	0.4	6	22	250	<0.08	1.2	NA	NA	500	4900	37	2.9
FS2088	AC-1 Ck9	C	No	AC	2900	58000	<0.9	0.5	1	10	74	260	0.09	1.5	NA	NA	720	6100	34	4.4
FS2088D1	AC-1 Ck9	C	No	AC	NA	NA	NA	NA	7	NA	NA	NA	NA	NA	NA	NA	NA	NA	NA	NA
FS2088-AVE	Average of FS2088,FS2088D1	C	Yes	AC	2900	58000	<0.9	0.5	4	10	74	260	0.09	1.5	NA	NA	720	6100	34	4.4
FS2089	LA-4 BCb	B	Yes	LA	11000	55000	<0.6	1.7	<0.3 (X)	16	110	590	0.7	1.5	NA	NA	1900	3800	25	10
FS2090	LA-4 Bt4b	B	Yes	LA	20000	76000	<0.9	2.6	9	18	210	620	1.4	2.4	NA	NA	3600	5600	31	16
FS2091	LA-4 Bt5b	B	Yes	LA	15000	64000	<0.9	2.1	5	1	140	540	1.3	2.2	NA	NA	3000	4400	33	12
FS2092	LA-4 Bt6b	B	Yes	LA	17000	67000	<0.9	2	8	7	120	580	1.2	2.1	NA	NA	2900	5100	37	13
FS2093	LA-4 Bt7b	B	Yes	LA	11000	64000	<0.9	1.8	8	12	120	590	0.97	1.9	NA	NA	2400	5300	27	10
FS2094	LA-4 Bt8b	B	Yes	LA	9100	63000	<0.9	1.5	5	8	140	680	0.81	1.7	NA	NA	2100	5700	25	8
FS2095	LA-4 Bt9b	B	No	LA	11000	60000	<0.9	1.7	5	18	120	580	0.91	1.8	NA	NA	2400	4200	11	9.2
FS2095D1	LA-4 Bt9b	B	No	LA	NA	NA	NA	NA	NA	NA	NA	NA	NA	NA	NA	NA	NA	NA	NA	NA
FS2095-AVE	Average of FS2095,FS2095D1	B	Yes	LA	11000	60000	<0.9	1.7	5	18	120	580	0.91	1.8	NA	NA	2400	4200	11	9.2
FS2096	TA-51 BA	B	Yes	TA-51	12000	60000	<0.9	1.1	8	9	220	690	0.71	1.9	NA	NA	5200	8700	16	12
FS2097	TA-51 BC	B	Yes	TA-51	9800	61000	<1.5	0.9	6	6	200	600	0.71	1.8	NA	NA	7200	9300	14	9.7
FS2098	TA-51 BW	B	No	TA-51	12000	62000	<1.5	1.2	6	18	220	610	0.79	1.9	NA	NA	5200	7600	14	12
FS2098D1	TA-51 BW	B	No	TA-51	NA	NA	NA	NA	NA	NA	NA	NA	NA	NA	NA	NA	NA	NA	NA	NA
FS2098-AVE	Average of FS2098,FS2098D1	B	Yes	TA-51	12000	62000	<1.5	1.2	6	18	220	610	0.79	1.9	NA	NA	5200	7600	14	12
FS2099	TA-63 Bwb	B	Yes	TA-63	11000	65000	<1.5	0.9	4	5	150	580	0.86	2	NA	NA	1700	5300	11	10
FS2100	TA-63-1A A1	A	No	TA-63	8400	53000	<1.5	0.9	4	9	150	650	0.65	1.7	NA	NA	2000	5300	13	9.8
FS2100D1	TA-63-1A A1	A	No	TA-63	NA	NA	NA	NA	NA	NA	NA	NA	NA	NA	NA	NA	NA	NA	NA	NA
FS2100-AVE	Average of FS2100,FS2100D1	A	Yes	TA-63	8400	53000	<1.5	0.9	4	9	150	650	0.65	1.7	NA	NA	2000	5300	13	9.8

BG Soil - Data list for EPA

Sample ID	SAMPLE DESCRIPTION	Horizon	Included	Location	Chromium-TOTAL	Cobalt-3050	Cobalt-TOTAL	Copper-3050	Copper-TOTAL	Iron-3050	Iron-TOTAL	Lead-3050	Lead-TOTAL	Magnesium-3050	Magnesium-TOTAL	Manganese-3050	Manganese-TOTAL	Mercury-3050	Nickel-3050	Nickel-TOTAL	Potassium-3050
FS2000	ULAC-08	A	Yes	ULAC	10.9	10	2.801	5.5	<402.9	9300	15320	12	26.5	1200	<3815	1100	1161	<0.1	5.6	NA	1300
FS2002	TA-49 CB-06	C	Yes	TA-49	19.42	22	5.927	3	<456.6	8400	21750	<4	26	1800	8239	100	480.1	<0.1	8	NA	2200
FS2004	TA-49 BW-02	B	Yes	TA-49	45.51	14	9.098	5.4	<238.3	19000	29820	20	24.5	3400	6648	310	503.5	<0.1	13	NA	3700
FS2005	TA-49 Bwk-04	B	Yes	TA-49	32.29	19	7.554	3.6	<400.1	14000	25320	10	26.6	2700	6870	210	513.1	<0.1	11	NA	2900
FS2010	EGG Btb-06	B	Yes	EGG	30.36	19	6.666	5.5	<258.3	15000	21730	13	32	2900	3237	380	473	<0.1	9	NA	2800
FS2011	EGG Bw-03	B	Yes	EGG	20	22	4.269	3	<228.7	12000	18300	10	<14	2100	4271	320	400.8	<0.1	6	NA	2000
FS2012	EGG CB-04	C	Yes	EGG	20.71	20	4.873	3.6	<335.1	14000	19730	11	26	2400	5753	330	478	<0.1	9	NA	2300
FS2013	EGG Bt-02	B	Yes	EGG	31.34	13	5.942	2.9	<245.2	15000	21830	10	25	2200	3032	370	483.4	<0.1	10	NA	2100
FS2021	EGG A-01	A	Yes	EGG	16.75	10	3.873	3.3	<344.5	5400	17870	7	21	1100	<3287	200	501.4	<0.1	4.8	NA	1200
FS2022	EGG CBb-07	C	Yes	EGG	39.25	12	6.779	4.3	<252	10000	20820	12	26	2200	3607	300	494.4	<0.1	8.2	NA	2200
FS2023	EGG C-05	C	Yes	EGG	24.6	13	5.287	3.7	<258.1	10000	19520	11	29	2200	4099	240	429.2	<0.1	8	NA	2300
FS2027	TA-16-10 BW	B	Yes	TA-16	39.03	18	10.91	3	<276.5	12000	17430	20	30	1800	<2693	350	530.1	<0.1	7	NA	2000
FS2028	TA-69 Bt2	B	Yes	TA-69	60.04	8.1	7.388	8.2	<186.4	25000	34390	20	33	4700	6441	190	251.8	<0.1	16	NA	3700
FS2031	TA-69 South 24 C1 Bt	C	Yes	TA-69	49.86	11	12.32	4.8	<216.5	16000	25580	16	25	2800	3490	350	703.3	<0.1	8	NA	2200
FS2032	TA-39-36-A1	A	Yes	TA-39	43.13	12	8.287	5.5	<209.1	13000	19590	20	25	2500	5029	420	557.4	<0.1	8.7	NA	2900
FS2034	TA-39-40 Bwkb	B	Yes	TA-39	50.29	9.3	9.754	5	<207.4	15000	23680	15	30	3700	5828	350	468	<0.1	11	NA	2800
FS2038	TA-69 South Br	B	Yes	TA-69	29.16	12	4.168	5	<180.5	20000	25110	16	21	5600	6404	110	189.3	0.1	14	NA	3900
FS2039	TA-69 Crb	C	Yes	TA-69	10.86	11	1.719	0.6	<384.2	12000	19170	4	26	1400	<3670	61	326.2	<0.1	3.3	NA	1900
FS2040	TA-69 BC	B	Yes	TA-69	26.74	6	4.278	4	<256.2	17000	27010	13	28	3200	5070	78	232.2	<0.1	9	NA	2600
FS2043	TA-69-07N 2Bt3b	B	Yes	TA-69	30.95	8	5.238	10	<220.4	22000	30920	20	34	5000	5652	93	227.2	<0.1	17	NA	3000
FS2044	TA-69S-23 2Bt2b	B	Yes	TA-69	46.85	8.8	8.193	11	<249.7	22000	29750	21	28	3700	6106	350	412.8	<0.1	13	NA	2200
FS2045	TA-69S-19 A	A	Yes	TA-69	52.12	21	8.217	5	<208.5	12000	18000	18	20	1700	<1597	550	586.6	<0.1	7.5	NA	1700
FS2046	TA-39-S-41 Btkb	B	No	TA-39	61.94	11	11.15	16	<185.1	36000	39380	30	33	10000	12310	290	377.6	<0.1	28	NA	6800
FS2046D1	LAB REP	B	No	TA-39	NA	12	NA	16	NA	36000	NA	26	NA	10000	NA	290	NA	NA	30	NA	6900
FS2046-AVE	Average of FS2046,FS2046D1	B	Yes	TA-39	61.94	11.5	11.15	16	<185.1	36000	39380	28	33	10000	12310	290	377.6	<0.1	29	NA	6850
FS2047	TA-39-S-41 Btkb, FS-2046 Duplicate	B	Yes	TA-39	52.64	NA	10.76	NA	<247.6	NA	41130	NA	37	NA	13230	NA	373.8	NA	NA	NA	NA
FS2052	TA-69 AE	A	Yes	TA-69	36.78	27	14.65	3	<199.2	13000	15490	18	25	1500	1787	590	688.8	<0.1	7	NA	1400
FS2053	TA-39-37-A2	A	Yes	TA-39	43.97	15	9.408	8	<271.1	16000	20850	16	23	2800	4123	500	615.5	<0.1	12	NA	2500
FS2054	TA-16-A-09	A	Yes	TA-16	35.99	12	6.583	6	<242.2	14000	23710	37 (X)	44	2600	3995	300	493	<0.1	9	NA	2700
FS2056	TA-69-N-09-2Bt1b	B	Yes	TA-69	45.5	10	7.002	9	<244.2	27000	32650	25	30	5500	6625	180	246.4	<0.1	19	NA	4000
FS2057	TA-39-39-Bwkb	B	No	TA-39	54.78	15	9.171	8	<211.6	18000	25060	17	25	4400	5690	490	547.2	<0.1	13	NA	3300
FS2058	TA-39-39-Bwkb, FS-2057 Duplicate	B	No	TA-39	43.88	NA	9.144	NA	<203.4	NA	22810	NA	29	NA	5326	NA	540.5	NA	NA	NA	NA
FS2057-AVE	Average of FS2057,FS2058	B	Yes	TA-39	49.33	15	9.1575	8	<211.6	18000	23935	17	27	4400	5508	490	543.85	<0.1	13	NA	3300
FS2059	TA-69Cr	C	Yes	TA-69	11.43	9	1.718	1.3	<363.3	13000	19940	<4	29	1800	<3490	76	345	<0.1	6.5	NA	1900
FS2060	TA-39-42-2Cr	C	Yes	TA-39	46.77	7.2	7.373	6.8	<202	17000	29220	12	23	7400	10670	160	298.8	0.1	15	NA	4200
FS2061	TA-39-38-Bt	B	Yes	TA-39	13.16	13	2.51	9.8	<209.4	22000	17360	16	24	5400	<1989	480	223.6	<0.1	17	NA	3800
FS2065	TA-69 Bt3	B	Yes	TA-69	40.08	5.5	6.581	3.8	<277.6	15000	37490	19	28.5	3700	7725	76	231	<0.1	9	NA	2000
FS2066	TA-69-S-20 Bw	B	Yes	TA-69	49.02	6.6	9.725	2.7	<203.8	9200	19060	15	25	1500	3624	350	536.9	<0.1	7	NA	970
FS2067	TA-69 Bt1	B	Yes	TA-69	57.51	10	16.56	7.9	<187.6	24000	35940	25	38	4200	6641	220	395.7	<0.1	13	NA	2700
FS2068	TA-69-S-22 2Bt1b	B	No	TA-69	50.3	12	9.635	7.9	<260	21000	32450	20	24	3800	6286	300	492.9	<0.1	10	NA	2400
FS2068D1	TA-69-S-22 2Bt1b, FS-2068 Duplicate	B	No	TA-69	61.83	NA	9.351	NA	<193.5	NA	33260	NA	27	NA	6180	NA	490.2	NA	NA	NA	NA
FS2068-AVE	Average of FS2068,FS2068D1	B	Yes	TA-69	56.065	12	9.493	7.9	<260	21000	32865	20	25.5	3800	6233	300	491.55	<0.1	10	NA	2400
FS2077	BSS-TS-06-01 AC Tsankawi	A	Yes	TSK	9.928	29	2.255	<0.5	<247.2	3300	13060	<4	34	880	<2288	140	403.9	<0.1	<2	NA	750
FS2078	BSS-TS-06-02 C1 Tsankawi	C	Yes	TSK	9.285	34	2.04	<0.5	<365	3300	12470	7	30	900	<3493	140	433.4	<0.1	<2	NA	1100
FS2079	BSS-TS-06-03 C2 Tsankawi	C	Yes	TSK	9.264	24	2.166	3.1	<291.4	3800	11370	24	56	910	<2167	150	474.5	<0.1	6	NA	1100
FS2080	AC-1 A2	A	Yes	AC	5.5	3.7	0.79	2.1	1.9	5400	13000	5	7.5	440	1200	310	370	NA	<2	4.4	410
FS2080D1	AC-1 A2	A	No	AC	NA	1.9	NA	2.1	NA	12000	NA	5	NA	530	NA	240	NA	NA	<2	NA	480
FS2080D2	AC-1 A2	A	No	AC	NA	NA	NA	NA	NA	NA	NA	NA	NA	NA	NA	NA	NA	NA	NA	NA	NA
FS2080-AVE	Average of FS2080,FS2080D1,FS2080D2	A	Yes	AC	5.5	2.8	0.79	2.1	1.9	8700	13000	5	7.5	485	1200	275	370	NA	<2	4.4	445
FS2081	AC-1 Btb	B	No	AC	15	2.7	2.9	4.3	6.6	8900	16000	7	15	NA	3300	270	430	NA	3	8	1300
FS2081D1	AC-1 Btb	B	No	AC	NA	NA	NA	NA	NA	NA	NA	NA	NA	1400	NA	NA	NA	NA	NA	NA	NA
FS2081-AVE	Average of FS2081,FS2081D1	B	Yes	AC	15	2.7	2.9	4.3	6.6	8900	16000	7	15	1400	3300	270	430	NA	3	8	1300
FS2082	AC-1 Bw1	B	Yes	AC	15	3	2.9	5.4	7.8	10000	16000	5	13	1400	3000	310	420	NA	4	8.9	1400
FS2083	AC-1 Bw2	B	No	AC	13	3.3	2.9	5.4	6.1	10000	16000	5	9.5	1200	2800	310	430	NA	4	8	1200
FS2083D1	AC-1 Bw2	B	No	AC	NA	NA	NA	NA	NA	NA	NA	NA	NA	NA	NA	NA	NA	NA	NA	NA	NA
FS2083-AVE	Average of FS2083,FS2083D1	C	Yes	AC	13	1.8	3.3	1.9	1.7	9000	17000	<4	4.4	470	1400	180	390	NA	<2	5.1	440
FS2084	AC-1 Bw3	B	Yes	AC	20	3.4	5	2.8	3.7	13000	36000	5	7.6	800	3000	290	820	NA	3	13	780
FS2085	AC-1 Bwb	B	Yes	AC	12	2.8	2.3	4.2	5.6	10000	15000	5	12	1500	3000	280	370	NA	3	7	1400
FS2086	AC-1 C	C	No	AC	13	1.8	3.3	1.9	1.7	9000	17000	<4	4.4	470	1400	180	390	NA	<2	5.1	440
FS2086D1	AC-1 C	C	No	AC	NA	NA	NA	NA	NA	NA	NA	NA	NA	NA	NA	NA	NA	NA	NA	NA	NA
FS2086-AVE	Average of FS2086,FS2086D1	C	Yes	AC	13	1.8	3.3	1.9	1.7	9000	17000	<4	4.4	470	1400	180	390	NA	<2	5.1	440
FS2087	AC-1 C1	C	Yes	AC	6.4	1.4	1.9	1.5	1.9	5200	12000	<4	6.9	420	1300	120	310	NA	<2	4.8	410
FS2088	AC-1 Ck9	C	No	AC	4.9	2.1	2	1.9	1.7	9700	9100	<4	7	570	1200	220	280	NA	<2	2.3	570
FS2088D1	AC-1 Ck9	C	No	AC	NA	NA	NA	NA	NA	NA	NA	NA	NA	NA	NA	NA	NA	NA	NA	NA	NA
FS2088-AVE	Average of FS2088,FS2088D1	C	Yes	AC	4.9	2.1	2	1.9	1.7	9700	9100	<4	7	570	1200	220	280	NA	<2	2.3	570
FS2089	LA-4 BCb	B	Yes	LA	25	8.1	7.4	7.1	12	12000	18000	18	14	1700	2900	510	590	NA	7.5	11	1500
FS2090	LA-4 Bt4b	B	Yes	LA	36	15	25	14	20	18000	29000	11	15	2800	5500	1000	1600	NA	24	43	1900
FS2091	LA-4 Bt5b	B	Yes	LA	32	9.5	7.7	11	17	16000	25000	10	12	2600	4800	560	520	NA	14	22	1800
FS2092	LA-4 Bt6b	B	Yes	LA	30	7.4	9.7	11	16	17000	25000	8	14	2700	4800	440	670	NA	14	24	2100
FS2093	LA-4 Bt7b	B	Yes	LA	28	6.1	6.7	8.3	13	14000	23000	9	14	2000	4200	390	530	NA	8	18	1700
FS2094	LA-4 Bt8b	B	Yes	LA	26	6.5	7	7.8	14	12000	22000	8	13	1600	3900	490	540	NA	9	17	1400
FS2095	LA-4 Bt9b	B	No	LA	24	7.4	6.5	8.9	15	14000	20000	12	15	2000	3500	NA	600	NA	7	15	1600
FS2095D1	LA-4 Bt9b	B	No	LA	NA	NA	NA	NA	NA	NA	NA	NA	NA	NA	NA	NA	630	NA	NA	NA	NA
FS2095-AVE	Average of FS2095,FS2095D1	B	Yes	LA	24	7.4	6.5	8.9	15	14000	20000	12	15	2000	3500	NA	615	NA	7	15	1600
FS2096	TA-51 BA	B	Yes	TA-51	29	6.8	6.9	13	19	15000	22000	25	32	2600	4900	530	630	NA	6	13	2200
FS2097	TA-51 BC	B	Yes	TA-51	29	6	7.4	8.1	13	13000	23000	9	15	2000	4500	420	670	NA	5	10	1500
FS2098	TA-51 BW	B	No	TA-51	28	8.5	7.3	7.9	13	16000	23000	15	15	2400	4500	590	610	NA	7	12	1900
FS2098D1	TA-51 BW	B	No	TA-51	NA	NA	NA	NA	NA	NA	NA	NA	NA	NA	NA	NA	NA	NA	NA	NA	NA
FS2098-AVE	Average of FS2098,FS2098D1	B	Yes	TA-51	28	8.5	7.3	7.9	13	16000	23000	15	15	2400	4500	590	610	NA	7	12	1900
FS2099	TA-63 Bwb	B	Yes	TA-63	27	6.3	6.9	6.9	12	13000	22000	11	16	1800	3800	410	510	NA	6	11	1300
FS2100	TA-63-1A A1	A	No	TA-63	23	7.3	7	9.8	17	13000	17000	18	20	1700	3200	600	650	NA	6	10	1600
FS2100D1	TA-63-1A A1	A	No	TA-63	NA	NA	NA	NA	NA	NA	NA	NA	NA	NA	NA	NA	NA	NA	NA	NA	NA
FS2100-AVE	Average of FS2100,FS2100D1	A	Yes	TA-63	23	7.3	7	9.8	17	13000	17000	18	20	1700	3200	600	650	NA	6	10	1600

BG Soil - Data list for EPA-

Sample ID	SAMPLE DESCRIPTION	Horizon	Included	Location	Potassium-TOTAL	Selenium-3050	Sodium-3050	Sodium-TOTAL	Sulfate-3050	Tantalum-3050	Tantalum-TOTAL	Thallium-3050	Thallium-TOTAL	Thorium-3050	Thorium-TOTAL	Uranium-3050	Uranium-TOTAL	Vanadium-3050	Vanadium-TOTAL	Zinc-3050
FS2000	ULAC-08	A	Yes	ULAC	32050	<0.3	200	27380	23	<0.2	3.128	<0.2	NA	5	14	0.6	3.613	10	18.94	58 (X)
FS2002	TA-49 CB-06	C	Yes	TA-49	31780	<0.3	1700	23530	446	<0.2	3.184	<0.2	NA	5	23.23	0.6	4.906	17	36.54	21
FS2004	TA-49 BW-02	B	Yes	TA-49	19860	0.8	520	15990	54	<0.2	2.727	0.2	NA	8	22.35	0.6	3.098	36	66.69	42
FS2005	TA-49 Bwk-04	B	Yes	TA-49	26770	0.5	1000	19270	143	<0.2	2.985	<0.2	NA	6	18.39	0.6	3.903	30	49.35	32
FS2010	EGG Btb-06	B	Yes	EGG	32330	0.3	430	20280	36	<0.2	3.17	0.2	NA	9	19.64	0.9	3.545	23	34.94	57
FS2011	EGG Bw-03	B	Yes	EGG	29660	<0.3	240	22750	32	<0.2	3.367	<0.2	NA	7	18.87	0.7	3.56	17	24.61	42
FS2012	EGG CB-04	C	Yes	EGG	31860	<0.3	310	22460	82	<0.2	3.132	<0.2	NA	8	16.46	0.7	3.508	18	31.73	43
FS2013	EGG Bt-02	B	Yes	EGG	31980	<0.3	250	23840	30	<0.2	3.124	<0.2	NA	7	17.64	0.7	3.489	22	34.25	45
FS2021	EGG A-01	A	Yes	EGG	31960	<0.2	140	24540	30	<0.2	3.019	<0.2	NA	5	15.06	0.5	3.66	9.3	21.09	26
FS2022	EGG CBb-07	C	Yes	EGG	28340	0.3	680	19420	116	<0.2	3.147	<0.2	NA	8	17.38	1	4.196	18	40.95	35
FS2023	EGG C-05	C	Yes	EGG	29480	<0.2	330	22950	403	<0.2	3.06	<0.2	NA	8	18.81	0.7	3.771	15	24.42	35
FS2027	TA-16-10 BW	B	Yes	TA-16	22260	0.4	320	13530	26	<0.2	1.694	0.2	NA	8	13.66	1	3.453	31	57.66	21
FS2028	TA-69 Bt2	B	Yes	TA-69	21030	1.2	600	12270	98	<0.2	2.056	0.7	NA	11	17.96	1.4	3.188	45	76.79	60
FS2031	TA-69 South 24 C1 Bt	C	Yes	TA-69	26180	0.6	360	15150	70	<0.2	1.865	<0.2	NA	9	14.62	0.8	2.965	32	60.41	31
FS2032	TA-39-36-A1	A	Yes	TA-39	21740	<0.2	270	15020	26	<0.2	1.504	0.2	NA	8	13.03	1.1	3.463	28	54.22	36
FS2034	TA-39-40 Bwkb	B	Yes	TA-39	20410	0.4	640	16040	53	<0.2	2.016	0.4	NA	11	15.56	0.9	3.094	30	55.46	35
FS2038	TA-69 South Br	B	Yes	TA-69	15090	0.8	1000	10300	217	<0.2	1.507	0.9	NA	9	12.4	1	3.473	30	48.36	47
FS2039	TA-69 Crb	C	Yes	TA-69	42000	<0.2	1200	26860	32	<0.2	2.534	<0.2	NA	3	13.14	0.5	2.921	12	18.87	28
FS2040	TA-69 BC	B	Yes	TA-69	26880	0.4	1100	22090	442	<0.2	2.841	0.4	NA	6	16.84	0.7	2.741	20	34.64	37
FS2043	TA-69-07N 2Bt3b	B	Yes	TA-69	24880	0.9	670	16880	212	<0.2	2.334	0.6	NA	7	18.1	0.6	2.356	24	47.35	44
FS2044	TA-69S-23 2Bt2b	B	Yes	TA-69	19350	0.5	280	10850	22	<0.2	2.059	0.5	NA	8	14.35	1	3.211	40	79.45	33
FS2045	TA-69S-19 A	A	Yes	TA-69	23090	<0.2	180	14740	30	<0.2	1.622	<0.2	NA	7	13.53	1	3.84	28	44.54	21
FS2046	TA-39-S-41 Btkb	B	No	TA-39	19990	1	1800	8500	199	<0.2	2.128	0.6	NA	11	20.88	1	2.55	56	82.16	75
FS2046D1	LAB REP	B	No	TA-39	NA	0.8	1800	NA	NA	<0.2	NA	0.7	NA	10	NA	1	NA	57	NA	78
FS2046-AVE	Average of FS2046,FS2046D1	B	Yes	TA-39	19990	0.9	1800	8500	199	<0.2	2.128	0.65	NA	10.5	20.88	1	2.55	56.5	82.16	75.5
FS2047	TA-39-S-41 Btkb, FS-2046 Duplicate	B	Yes	TA-39	17270	NA	NA	8072	NA	NA	2.384	NA	NA	NA	18.94	NA	2.499	NA	84.71	NA
FS2052	TA-69 AE	A	Yes	TA-69	23010	<0.2	260	15070	44	<0.2	1.579	0.2	NA	6	12.52	1	3.611	35	55.74	14
FS2053	TA-39-37-A2	A	Yes	TA-39	21950	<0.2	270	14190	30	<0.2	1.785	0.2	NA	7	12.8	1	3.673	35	56.66	33
FS2054	TA-16-A-09	A	Yes	TA-16	24770	<0.2	660	17740	44	<0.2	2.594	0.2	NA	7	17.2	2	3.962	29	45.16	40
FS2056	TA-69-N-09-2Bt1b	B	Yes	TA-69	21460	0.7	350	11990	35	<0.2	1.933	0.7	NA	9	14.82	1	2.89	55	76.79	55
FS2057	TA-39-39-Bwkb	B	No	TA-39	22330	<0.2	570	13760	74	<0.2	2.154	0.5	NA	8	15.58	0.9	3.146	40	61.55	39
FS2058	TA-39-39-Bwkb, FS-2057 Duplicate	B	No	TA-39	23540	NA	NA	13400	NA	NA	1.76	NA	NA	NA	14.99	NA	3.085	NA	62.65	NA
FS2057-AVE	Average of FS2057,FS2058	B	Yes	TA-39	22935	<0.2	570	13580	74	<0.2	1.957	0.5	NA	8	15.285	0.9	3.1155	40	62.1	39
FS2059	TA-69Cr	C	Yes	TA-69	36040	<0.2	1200	25140	25	<0.2	2.831	<0.2	NA	3	13.56	0.4	3.14	14	18.88	31
FS2060	TA-39-42-2Cr	C	Yes	TA-39	16270	1.7	1600	10800	1200	<0.2	1.881	0.6	NA	7	14.79	1.5	2.995	29	58.23	57
FS2061	TA-39-38-Bt	B	Yes	TA-39	26840	0.5	410	20090	30	<0.2	1.841	0.2	NA	9	11.79	0.9	2.182	47	22.94	53
FS2065	TA-69 Bt3	B	Yes	TA-69	20620	1.1	610	12860	324	<0.2	2.929	0.7	NA	10	17.91	0.9	2.278	21	59.91	28
FS2066	TA-69-S-20 Bw	B	Yes	TA-69	23150	0.3	58	14920	14	<0.2	1.747	<0.2	NA	6	13.31	0.9	3.576	22	52.69	14
FS2067	TA-69 Bt1	B	Yes	TA-69	20920	1.3	330	9185	29	<0.2	1.94	0.6	NA	9	18.29	1.5	3.409	45	87.81	41
FS2068	TA-69-S-22 2Bt1b	B	No	TA-69	19360	1.2	210	10470	24	<0.2	2.176	0.4	NA	9	14.86	1.5	3.236	41	84.82	33
FS2068D1	TA-69-S-22 2Bt1b, FS-2068 Duplicate	B	No	TA-69	18970	1	NA	11140	NA	<0.2	2.333	0.4	NA	8	16.18	1.5	3.336	NA	80.53	NA
FS2068-AVE	Average of FS2068,FS2068D1	B	Yes	TA-69	19165	1.1	210	10805	24	<0.2	2.2545	0.4	NA	8.5	15.52	1.5	3.286	41	82.675	33
FS2077	BSS-TS-06-01 AC Tsankawi	A	Yes	TSK	31070	<0.2	660	25950	20	<0.2	3.55	<0.2	NA	2	14.17	0.2	4.338	4.8	13.47	14
FS2078	BSS-TS-06-02 C1 Tsankawi	C	Yes	TSK	35570	<0.2	770	28160	16	<0.12	5.416	NA	NA	3.4	20.88	0.4	5.767	4.4	11.54	19
FS2079	BSS-TS-06-03 C2 Tsankawi	C	Yes	TSK	32930	<0.2	830	27170	19	<0.125	5.666	<0.125	NA	2.5	23.01	0.6	6.728	4	<6.407	21
FS2080	AC-1 A2	A	Yes	AC	26000	NA	71	21000	<12	<0.8	2.8	<0.2	0.5	3.5	15.1	0.6	3	7.4	15	24
FS2080D1	AC-1 A2	A	No	AC	NA	NA	64	NA	NA	<0.8	4.4	<0.2	0.2	3.7	8.5	0.5	NA	16	NA	47
FS2080D2	AC-1 A2	A	No	AC	NA	NA	NA	NA	NA	NA	NA	NA	NA	NA	NA	2	NA	NA	NA	NA
FS2080-AVE	Average of FS2080,FS2080D1,FS2080D2	A	Yes	AC	26000	NA	67.5	21000	NA	<0.8	3.6	<0.2	0.35	3.6	11.8	1.03	3	11.7	15	35.5
FS2081	AC-1 Btb	B	No	AC	31000	NA	270	20000	722	<0.8	5.9	<0.2	0.6	7.4	21.9	1	6.3	10	26	36
FS2081D1	AC-1 Btb	B	No	AC	NA	NA	NA	NA	NA	NA	NA	NA	NA	NA	NA	NA	NA	NA	NA	NA
FS2081-AVE	Average of FS2081,FS2081D1	B	Yes	AC	31000	NA	270	20000	722	<0.8	5.9	<0.2	0.6	7.4	21.9	1	6.3	10	26	36
FS2082	AC-1 Bw1	B	Yes	AC	28000	NA	100	17000	32	<0.8	4.7	<0.2	0.7	6.6	18.9	0.9	5	14	27	35
FS2083	AC-1 Bw2	B	No	AC	28000	NA	120	19000	33	<0.8	4.1	<0.2	0.6	6.2	16.7	0.7	4.4	16	28	38
FS2083D1	AC-1 Bw2	B	No	AC	NA	NA	NA	NA	NA	NA	NA	NA	NA	NA	NA	NA	NA	NA	NA	NA
FS2083-AVE	Average of FS2086,FS2086D1	C	Yes	AC	27000	NA	93	22000	32	<0.8	2.5	<0.2	0.4	2.1	7.9	0.2	1.7	14	29	33
FS2084	AC-1 Bw3	B	Yes	AC	28000	NA	110	20000	32	<0.8	4.2	<0.2	0.5	4.2	17.4	0.5	3.3	21	65	47
FS2085	AC-1 Bwb	B	Yes	AC	30000	NA	320	20000	446	<0.8	6.2	<0.2	0.6	7	20	1	5.5	13	23	39
FS2086	AC-1 C	C	No	AC	27000	NA	93	22000	32	<0.8	2.5	<0.2	0.4	2.1	7.9	0.2	1.7	14	29	33
FS2086D1	AC-1 C	C	No	AC	NA	NA	NA	NA	NA	NA	NA	NA	NA	NA	NA	NA	NA	NA	NA	NA
FS2086-AVE	Average of FS2086,FS2086D1	C	Yes	AC	27000	NA	93	22000	32	<0.8	2.5	<0.2	0.4	2.1	7.9	0.2	1.7	14	29	33
FS2087	AC-1 C1	C	Yes	AC	26000	NA	90	23000	68	<0.8	2.5	<0.2	0.4	2.1	7.8	0.2	2.1	6.3	16	20
FS2088	AC-1 Ck9	C	No	AC	31000	NA	100	26000	66	<0.8	3	<0.2	0.5	3	11.4	0.4	3	16	11	32
FS2088D1	AC-1 Ck9	C	No	AC	NA	NA	NA	NA	NA	NA	NA	NA	NA	NA	NA	NA	NA	NA	NA	NA
FS2088-AVE	Average of FS2088,FS2088D1	C	Yes	AC	31000	NA	100	26000	66	<0.8	3	<0.2	0.5	3	11.4	0.4	3	16	11	32
FS2089	LA-4 BCb	B	Yes	LA	21000	NA	200	11000	47	<0.2	2.7	0.7	0.7	7.2	16.3	0.6	3.7	24	51	24
FS2090	LA-4 Bt4b	B	Yes	LA	19000	NA	280	9800	43	<0.8	2.9	0.4	1.1	9	17.6	1.1	4.3	30	67	44
FS2091	LA-4 Bt5b	B	Yes	LA	15000	NA	210	10000	42	<0.8	2.6	0.2	0.6	8.7	14.9	1.1	3.9	27	60	41
FS2092	LA-4 Bt6b	B	Yes	LA	17000	NA	300	12000	42	<0.8	2.9	0.2	0.7	8.9	15.1	1.2	3.9	28	58	41
FS2093	LA-4 Bt7b	B	Yes	LA	22000	NA	230	14000	46	<0.8	3.2	0.2	0.6	7.8	14.2	0.7	3	23	50	34
FS2094	LA-4 Bt8b	B	Yes	LA	24000	NA	210	15000	53	<0.8	3.2	0.2	0.6	7.6	14.6	0.7	3.5	20	49	29
FS2095	LA-4 Bt9b	B	No	LA	22000	NA	210	11000	18	<0.8	3.2	<0.2	0.7	7.7	16.4	0.6	3.6	25	51	35
FS2095D1	LA-4 Bt9b	B	No	LA	NA	NA	NA	NA	NA	NA	NA	NA	NA	NA	NA	NA	NA	NA	NA	NA
FS2095-AVE	Average of FS2095,FS2095D1	B	Yes	LA	22000	NA	210	11000	18	<0.8	3.2	<0.2	0.7	7.7	16.4	0.6	3.6	25	51	35
FS2096	TA-51 BA	B	Yes	TA-51	21000	NA	99	11000	23	<0.8	2.1	0.2	0.7	8.7	12.8	5.8 (X)	6.9 (X)	27	57	47
FS2097	TA-51 BC	B	Yes	TA-51	22000	NA	97	13000	22	<0.2	2.5	1	0.8	7.7	13.7	0.9	3.7	25	61	32
FS2098	TA-51 BW	B	No	TA-51	24000	NA	99	13000	27	<0.2	2.4	<1	0.7	8.5	14.4	1.1	3.5	32	59	37
FS2098D1	TA-51 BW	B	No	TA-51	NA	NA	NA	NA	NA	NA	NA	NA	0.7	NA	NA	NA	NA	NA	NA	NA
FS2098-AVE	Average of FS2098,FS2098D1	B	Yes	TA-51	24000	NA	99	13000	27	<0.2	2.4	<1	0.7	8.5	14.4	1.1	3.5	32	59	37
FS2099	TA-63 Bwb	B	Yes	TA-63	22000	NA	110	14000	14	<0.2	2.6	<1	0.6	8.5	15.4	1.2	3.7	28	55	30
FS2100	TA-63-1A A1	A	No	TA-63	22000	NA	98	12000	18	<0.2	1.8	<1	0.6	6.4	12	6.5	12	26	47	38
FS2100D1	TA-63-1A A1	A	No	TA-63	NA	NA	NA	NA	NA	NA	NA	NA	NA	NA	12.5	NA	NA	NA	NA	NA
FS2100-AVE	Average of FS2100,FS2100D1	A	Yes	TA-63	22000	NA	98	12000	18	<0.2	1.8	<1	0.6	6.4	12.25	6.5 (X)	12 (X)	26	47	38

Sample ID	SAMPLE DESCRIPTION	Horizon	Included	Location	Zinc-TOTAL
FS2000	ULAC-06	A	Yes	ULAC	54.57
FS2002	TA-49 CB-06	C	Yes	TA-49	<13.48
FS2004	TA-49 BW-02	B	Yes	TA-49	58.92
FS2005	TA-49 Bwk-04	B	Yes	TA-49	<10.92
FS2010	EGG Btb-06	B	Yes	EGG	70.29
FS2011	EGG Bw-03	B	Yes	EGG	57.12
FS2012	EGG CB-04	C	Yes	EGG	<35.21
FS2013	EGG Bt-02	B	Yes	EGG	45.16
FS2021	EGG A-01	A	Yes	EGG	<32.04
FS2022	EGG CBb-07	C	Yes	EGG	<20.27
FS2023	EGG C-05	C	Yes	EGG	61.44
FS2027	TA-16-10 BW	B	Yes	TA-16	<8.088
FS2028	TA-69 Bt2	B	Yes	TA-69	<21.1
FS2031	TA-69 South 24 C1 Bt	C	Yes	TA-69	<16.69
FS2032	TA-39-36-A1	A	Yes	TA-39	49.72
FS2034	TA-39-40 Bwkb	B	Yes	TA-39	65.7
FS2038	TA-69 South Br	B	Yes	TA-69	66.97
FS2039	TA-69 Crb	C	Yes	TA-69	<34.34
FS2040	TA-69 BC	B	Yes	TA-69	<20.43
FS2043	TA-69-07N 2Bt3b	B	Yes	TA-69	76.3
FS2044	TA-69S-23 2Bt2b	B	Yes	TA-69	<23.06
FS2045	TA-69S-19 A	A	Yes	TA-69	<16.77
FS2046	TA-39-S-41 Btkb	B	No	TA-39	<11.79
FS2046D1	LAB REP	B	No	TA-39	NA
FS2046-AVE	Average of FS2046,FS2046D1	B	Yes	TA-39	<11.79
FS2047	TA-39-S-41 Btkb, FS-2046 Duplicate	B	Yes	TA-39	62.8
FS2052	TA-69 AE	A	Yes	TA-69	19.97
FS2053	TA-39-37-A2	A	Yes	TA-39	<21.93
FS2054	TA-16-A-09	A	Yes	TA-16	<20.14
FS2056	TA-69-N-09-2Bt1b	B	Yes	TA-69	<37.68
FS2057	TA-39-39-Bwkb	B	No	TA-39	<20.01
FS2058	TA-39-39-Bwkb, FS-2057 Duplicate	B	No	TA-39	<8.761
FS2057-AVE	Average of FS2057,FS2058	B	Yes	TA-39	<20.01
FS2059	TA-69Cr	C	Yes	TA-69	<42.04
FS2060	TA-39-42-2Cr	C	Yes	TA-39	<23.76
FS2061	TA-39-38-Bt	B	Yes	TA-39	60.87
FS2065	TA-69 Bt3	B	Yes	TA-69	52.16
FS2066	TA-69-S-20 Bw	B	Yes	TA-69	<16.57
FS2067	TA-69 Bt1	B	Yes	TA-69	68.53
FS2068	TA-69-S-22 2Bt1b	B	No	TA-69	<28.81
FS2068D1	TA-69-S-22 2Bt1b, FS-2068 Duplicate	B	No	TA-69	<20.29
FS2068-AVE	Average of FS2068,FS2068D1	B	Yes	TA-69	<28.81
FS2077	BSS-TS-06-01 AC Tsankawi	A	Yes	TSK	<42.39
FS2078	BSS-TS-06-02 C1 Tsankawi	C	Yes	TSK	47.08
FS2079	BSS-TS-06-03 C2 Tsankawi	C	Yes	TSK	79.4
FS2080	AC-1 A2	A	Yes	AC	58
FS2080D1	AC-1 A2	A	No	AC	NA
FS2080D2	AC-1 A2	A	No	AC	NA
FS2080-AVE	Average of FS2080,FS2080D1,FS2080D2	A	Yes	AC	58
FS2081	AC-1 Btb	B	No	AC	68
FS2081D1	AC-1 Btb	B	No	AC	NA
FS2081-AVE	Average of FS2081,FS2081D1	B	Yes	AC	68
FS2082	AC-1 Bw1	B	Yes	AC	60
FS2083	AC-1 Bw2	B	No	AC	54
FS2083D1	AC-1 Bw2	B	No	AC	NA
FS2083-AVE	Average of FS2086,FS2086D1	C	Yes	AC	63
FS2084	AC-1 Bw3	B	Yes	AC	130
FS2085	AC-1 Bwb	B	Yes	AC	59
FS2086	AC-1 C	C	No	AC	63
FS2086D1	AC-1 C	C	No	AC	NA
FS2086-AVE	Average of FS2086,FS2086D1	C	Yes	AC	63
FS2087	AC-1 C1	C	Yes	AC	49
FS2088	AC-1 Ck9	C	No	AC	33
FS2088D1	AC-1 Ck9	C	No	AC	NA
FS2088-AVE	Average of FS2088,FS2088D1	C	Yes	AC	33
FS2089	LA-4 BCb	B	Yes	LA	41
FS2090	LA-4 Bt4b	B	Yes	LA	80
FS2091	LA-4 Bt5b	B	Yes	LA	68
FS2092	LA-4 Bt6b	B	Yes	LA	65
FS2093	LA-4 Bt7b	B	Yes	LA	64
FS2094	LA-4 Bt8b	B	Yes	LA	61
FS2095	LA-4 Bt9b	B	No	LA	54
FS2095D1	LA-4 Bt9b	B	No	LA	NA
FS2095-AVE	Average of FS2095,FS2095D1	B	Yes	LA	54
FS2096	TA-51 BA	B	Yes	TA-51	69
FS2097	TA-51 BC	B	Yes	TA-51	65
FS2098	TA-51 BW	B	No	TA-51	61
FS2098D1	TA-51 BW	B	No	TA-51	NA
FS2098-AVE	Average of FS2098,FS2098D1	B	Yes	TA-51	61
FS2099	TA-63 Bwb	B	Yes	TA-63	54
FS2100	TA-63-1A A1	A	No	TA-63	54
FS2100D1	TA-63-1A A1	A	No	TA-63	NA
FS2100-AVE	Average of FS2100,FS2100D1	A	Yes	TA-63	54

Sample ID	SAMPLE DESCRIPTION	Horizon	Included	Location	Aluminium-3050	Aluminium-TOTAL	Antimony-3050	Antimony-TOTAL	Arsenic-3050	Arsenic-TOTAL	Barium-3050	Barium-TOTAL	Beryllium-3050	Beryllium-TOTAL	Cadmium-TOTAL	Cadmium-3050	Calcium-3050	Calcium-TOTAL	Chlorine-	Chromium-3050
FS2101	TA-63-1A A2	A	Yes	TA-63	8500	60000	<1.5	1	4	8	170	650	0.73	1.8	NA	NA	2100	5200	12	9.5
FS2102	TA-63-1A Btb	B	Yes	TA-63	14000	71000	<1.5	1.3	5	22	310	810	1.5	2.4	NA	NA	8400	8600	12	12
FS2103	TA-63-1A Bth	B	Yes	TA-63	14000	65000	<1.5	1	4	17	170	570	0.81	1.8	NA	NA	2900	6100	13	11
FS2104	TA-63-1A Bw	B	Yes	TA-63	10000	57000	<1.5	0.8	5	7	170	660	0.79	1.8	NA	NA	2300	5400	20	11
FS2105	TA-63-2 Btb1	B	Yes	TA-63	12000	60000	<1.5	1	6	10	310	710	1.2	2.3	NA	NA	2700	5000	14	11
FS2106	TA-63-2 Btb2	B	Yes	TA-63	9000	62000	<1.5	0.7	3	10	120	540	0.87	2.1	NA	NA	2300	4900	15	8.9
FS2107	TA-63-2 Bth	B	Yes	TA-63	14000	63000	<1.5	1.1	6	7	200	620	0.98	1.9	NA	NA	2700	6100	12	12
FS2108	TA-63-2 Bthk	B	Yes	TA-63	20000	73000	<1.5	1.4	5	8	180	590	0.92	2	NA	NA	3300	8000	26	13
FS2109	TA-63-2 Btk1	B	Yes	TA-63	15000	61000	<1.5	1.1	5	9	170	620	0.76	1.8	NA	NA	4100	7800	25	11
FS2110	TA-63-2 Btkb1	B	Yes	TA-63	18000	68000	<1.5	1.2	6	10	150	560	1.4	2.5	NA	NA	3800	5600	16	15
FS2111	TA-63-2 Btkb2	B	No	TA-63	11000	66000	<1.5	1.3	5	11	130	560	1.3	2.5	NA	NA	3100	5400	17	11
FS2111D1	TA-63-2 Btkb2	B	No	TA-63	NA	NA	NA	1.2	NA	NA	NA	NA	NA	NA	NA	NA	NA	NA	NA	NA
FS2111-AVE	Average of FS2111,FS2111D1	B	Yes	TA-63	11000	66000	<1.5	1.25	5	11	130	560	1.3	2.5	NA	NA	3100	5400	17	11
FS2112	WC-2 TA-16 C2b1a	C	Yes	TA-16	4700	NA	<1.5	NA	3	NA	76	NA	0.27	NA	NA	NA	990	NA	10	5.5
FS2113	TA-63-2 Bw	B	No	TA-63	9300	NA	<1.5	NA	4	NA	170	NA	0.76	NA	NA	NA	2000	NA	12	10
FS2113D1	TA-63-2 Bw	B	No	TA-63	9800	NA	<1.5	NA	4	NA	180	NA	0.69	NA	NA	NA	1900	NA	NA	9.9
FS2113-AVE	Average of FS2113,FS2113D1	B	Yes	TA-63	9550	NA	<1.5	NA	4	NA	175	NA	0.725	NA	NA	NA	1950	NA	12	9.95
FS2114	TA-63a A2	A	Yes	TA-63	9300	NA	<0.6	NA	0.3 (X)	NA	150	NA	0.7	NA	NA	NA	1600	NA	12	9.5
FS2115	TA-63a Bw1	B	Yes	TA-63	8300	66000	<0.6	0.8	<0.3 (X)	15	140	580	0.65	2.1	NA	NA	1600	4300	11	7.9
FS2116	TA-63a CB	C	No	TA-63	11000	74000	<0.6	0.5	0.3	14	92	290	0.69	2.7	NA	NA	1400	2200	11	6.5
FS2116D1	TA-63a CB	C	No	TA-63	NA	NA	NA	NA	<0.2	NA	NA	NA	NA	NA	NA	NA	NA	NA	NA	NA
FS2116-AVE	Average of FS2116,FS2116D1	C	Yes	TA-63	11000	74000	<0.6	0.5	0.3	14	92	290	0.69	2.7	NA	NA	1400	2200	11	6.5
FS2118	TA-63c A1	A	Yes	TA-63	8600	63000	<0.6	0.7	0.3 (X)	13	160	550	0.62	1.9	NA	NA	2900	4700	21	8.1
FS2119	TA-63c A2	A	No	TA-63	8700	63000	<0.6	0.7	3	18	130	580	0.62	2.1	NA	NA	1600	4700	11	8.4
FS2119D1	TA-63c A2	A	No	TA-63	NA	NA	NA	NA	NA	NA	NA	NA	NA	NA	NA	NA	NA	NA	NA	NA
FS2119-AVE	Average of FS2119,FS2119D1	A	Yes	TA-63	8700	63000	<0.6	0.7	3	18	130	580	0.62	2.1	NA	NA	1600	4700	11	8.4
FS2120	TA-63c Bw1	B	Yes	TA-63	7300	62000	<0.6	0.7	<0.3 (X)	12	130	600	0.49	1.9	NA	NA	1500	4400	14	7.9
FS2121	TA-63c Bw2	B	Yes	TA-63	5900	62000	<0.6	0.6	2	0.5	100	540	0.42	1.8	NA	NA	1100	3700	18	6.7
FS2122	TA-63c Bw3	B	Yes	TA-63	8300	67000	<0.6	0.5	3	13	140	490	0.57	1.9	NA	NA	1300	3500	24	7.6
FS2123	WC-1 Btb1c	B	Yes	TA-16	8600	71000	<0.6	0.5	<0.3 (X)	17	85	430	0.69	2.2	NA	NA	2000	3300	10	7.4
FS2124	WC-1 Btb2	B	Yes	TA-16	9400	73000	<0.6	0.5	2	17	91	360	0.9	2.5	NA	NA	2700	3200	19	7.4
FS2125	WC-1 Bt2	B	Yes	TA-16	18000	77000	<0.6	0.5	6	18	340	610	1.1	2.6	NA	NA	2100	4000	50	11
FS2126	WC-1 Bt2b2	B	Yes	TA-16	13000	76000	<0.6	0.7	4	15	120	370	1.3	2.6	NA	NA	3800	4100	20	9.5
FS2127	WC-1 Bt3b2	B	No	TA-16	NA	75000	<0.6	0.3	3	15	NA	320	NA	2.7	NA	NA	NA	4100	34	NA
FS2127D1	WC-1 Bt3b2	B	No	TA-16	7900	76000	NA	0.5	NA	NA	85	NA	0.92	NA	NA	NA	3000	NA	NA	5.9
FS2127-AVE	Average of FS2127,FS2127D1	B	Yes	TA-16	7900	75500	<0.6	0.4	3	15	85	320	0.92	2.7	NA	NA	3000	4100	34	5.9
FS2128	WC-1 Bt4b2	B	No	TA-16	6000	69000	<0.6	0.6	2	10	69	310	0.65	2.7	NA	NA	2300	4200	44	4.9
FS2128D1	WC-1 Bt4b2	B	No	TA-16	NA	NA	NA	NA	<0.3	NA	NA	NA	NA	NA	NA	NA	NA	NA	NA	NA
FS2128-AVE	Average of FS2128,FS2128D1	B	Yes	TA-16	6000	69000	<0.6	0.6	2	10	69	310	0.65	2.7	NA	NA	2300	4200	44	4.9
FS2129	WC-1 Bt5b2	B	No	TA-16	6400	69000	<0.6	0.4	2	11	58	270	0.54	2.8	NA	NA	1800	3500	24	5.1
FS2129D1	WC-1 Bt5b2	B	No	TA-16	6400	NA	<0.6	NA	2	NA	59	NA	0.51	NA	NA	NA	1800	NA	NA	4.4
FS2129-AVE	Average of FS2129,FS2129D1	B	Yes	TA-16	6400	69000	<0.6	0.4	2	11	58.5	270	0.525	2.8	NA	NA	1800	3500	24	4.75
FS2130	WC-2 Bt1b1b	B	No	TA-16	6400	63000	<1.2	0.8	0	16	84	480	0.46	2.2	NA	NA	1800	4100	10	5.6
FS2130D1	WC-2 Bt1b1b	B	No	TA-16	6900	NA	<1.2	NA	NA	NA	87	NA	0.49	NA	NA	NA	1900	NA	NA	6.3
FS2130-AVE	Average of FS2130,FS2130D1	B	Yes	TA-16	6650	63000	<1.2	0.8	0 (X)	16	85.5	480	0.475	2.2	NA	NA	1850	4100	10	5.9
FS2131	WC-2 Bt2b1b	B	Yes	TA-16	5900	61000	<1.2	0.7	NA	10	78	430	0.46	2.2	NA	NA	1700	3800	9	5.3
FS2132	WC-2 Bt2b1c	B	Yes	TA-16	5600	65000	<1.2	0.7	NA	14	62	390	0.45	2.3	NA	NA	1500	3400	9	5.6
FS2133	WC-2 Bt3b1c	B	No	TA-16	6900	65000	<1.2	0.6	NA	6	60	370	0.44	2.5	NA	NA	1400	3200	9	5.6
FS2133D1	WC-2 Bt3b1c	B	No	TA-16	NA	NA	NA	NA	NA	<0.3	NA	NA	NA	NA	NA	NA	NA	NA	NA	NA
FS2133-AVE	Average of FS2133,FS2133D1	B	Yes	TA-16	6900	65000	<1.2	0.6	NA	6	60	370	0.44	2.5	NA	NA	1400	3200	9	5.6
FS2134	WC-2 C3b1a	C	Yes	TA-16	3700	56000	<1.2	0.7	NA	13	67	480	0.16	1.8	NA	NA	1000	3500	9	4.3
FS2135	WC-2 C3bia	C	Yes	TA-16	3600	56000	<1.2	1.1	NA	11	55	430	0.14	2	NA	NA	890	3300	9	3.5
FS2136	WC-3 2c	C	Yes	TA-16	7800	67000	<1.2	0.6	NA	14	110	620	0.5	2.3	NA	NA	2000	9100	76	6.7
FS2137	WC-3 Ap	A	Yes	TA-16	5200	56000	<1.2	0.7	NA	14	100	520	0.32	1.8	NA	NA	970	5500	9	5.6
FS2138	WC-3 Bc	B	Yes	TA-16	15000	70000	<1.2	0.8	NA	17	210	590	1.1	2.7	NA	NA	2900	7800	148	8.4
FS2139	WC-3 Bt1	B	Yes	TA-16	16000	73000	<1.2	0.7	NA	12	80	430	1.1	2.6	NA	NA	1800	5300	14	8.6
FS2140	WC-3 Bt3	B	Yes	TA-16	13000	78000	<1.2	0.8	NA	17	270	740	1	2.9	NA	NA	2300	6600	98	9.3
FS2141	WC-3 Bt4	B	Yes	TA-16	12000	56000	<1.2	0.6	NA	19	250	580	0.96	2.1	NA	NA	2600	5600	149	7.7
FS2142	TA-63-2 Btb1	B	Yes	TA-63	12000	63000	<1.2	0.8	NA	19	220	640	1	2.5	NA	NA	2500	5200	12	10
FS2143	TA-63-2 Btb2	B	Yes	TA-63	8000	57000	<1.2	0.5	NA	16	86	440	0.5	1.8	NA	NA	2100	4100	12	8.8
FS2144	TA-63-2 Bth	B	No	TA-63	10000	63000	<1.2	0.7	NA	24	160	610	0.74	2.1	NA	NA	2500	6000	9	10
FS2144D1	TA-63-2 Bth	B	No	TA-63	NA	NA	NA	0.9	NA	NA	NA	NA	NA	NA	NA	NA	NA	NA	NA	NA
FS2144-AVE	Average of FS2144,FS2144D1	B	Yes	TA-63	10000	63000	<1.2	0.8	NA	24	160	610	0.74	2.1	NA	NA	2500	6000	9	10
FS2145	TA-63-2 BthK	B	Yes	TA-63	15000	68000	<1.2	1.4	NA	4	170	560	0.75	2.1	NA	NA	3100	7800	23	10
FS2146	TA-63-2 Btk1	B	Yes	TA-63	9000	59000	<1.2	1.4	NA	19	130	610	0.45	1.8	NA	NA	2000	5600	10	7.2
FS2147	TA-63-2 Btkb1	B	Yes	TA-63	10000	65000	<1.2	1.7	NA	18	140	530	1.1	2.5	NA	NA	3400	5900	13	9.6
FS2148	TA-63-2 Btkb2	B	Yes	TA-63	10000	61000	<1	1.5	4	1	130	550	1.2	2.5	NA	NA	3100	5500	14	10
FS2149	TA-63-2 Bw	B	Yes	TA-63	9200	55000	<1	1.4	4	25	150	620	0.64	1.9	NA	NA	1900	5200	9	9.9
FS2150	TA-63c A2	A	Yes	TA-63	8500	57000	<1	1.3	2	7	130	550	0.54	2	NA	NA	1500	5600	10	7.9
FS2151	TA-63c BW1	B	Yes	TA-63	11000	59000	<1	1.2	3	20	140	510	0.66	2	NA	NA	1700	5100	9	9.6
FS2152	TA-63c Bw2	B	Yes	TA-63	11000	59000	<1	1.6	3	6	140	530	0.64	2	NA	NA	1600	5300	8	9.6
FS2153	TA-63c CB	C	Yes	TA-63	7900	66000	<1	0.7	2	5	88	240	0.46	2.6	NA	NA	1300	2300	10	4.3
FS2154	TA-63c A1	A	Yes	TA-63	6900	55000	<1	1.1	2	5	110	420	0.4	2.2	NA	NA	2000	4600	18	6.4
FS2155	TA-63c Bw1	B	Yes	TA-63	7000	54000	<1	1	2	5	110	540	0.41	1.8	NA	NA	1400	5400	12	7.8
FS2156	TA-63c Bw3	B	Yes	TA-63	7900	59000	<1	1.1	3	3	110	510	0.44	2.1	NA	NA	1300	4800	19	7.6
FS2157	TA-67 E1 2BCb	B	Yes	TA-67	17000	69000	<1	1.1	4	5	190	580	0.91	2.6	NA	NA	2200	6900	9	10
FS2158	TA-67 E1 2Bwb	B	Yes	TA-67	20000	73000	<1	1.3	4	12	240	620	1.1	2.6	NA	NA	2400	8200	9	11
FS2159	TA-67 E1 A	A	Yes	TA-67	10000	61000	<1	1.2	4	5	160	610	0.64	2.2	NA	NA	1600	7700	9	8.2
FS2160	TA-67 E1 BA	B	Yes	TA-67	11000	61000	<1	1.2	4	5	170	580	0.66	2.2	NA	NA	1700	7400	9	9.1
FS2161	TA-67 E1 Bt1	B	Yes	TA-67	12000	64000	<1	1.2	4	<0.5	200	660	0.84	2.2	NA	NA	1800	6900	8	9.6
FS2162	TA-67 E1 Bt2	B	No	TA-67	21000	74000	<1	1.5	5	5	240	630	1.2	2.6	NA	NA	2500	7400	9	12
FS2162D1	TA-67 E1 Bt2	B	No	TA-67	NA	NA	NA	1.1	NA	NA	NA	NA	NA	NA	NA	NA	NA	NA	NA	NA
FS2162-AVE	Average of FS2162,FS2162D1	B	Yes	TA-67	21000	74000	<1	1.35	5	5	240	630	1.2	2.6	NA	NA	2500	7400	9	12

BG Soil - Data list for EPA

Sample ID	SAMPLE DESCRIPTION	Horizon	Included	Location	Chromium-TOTAL	Cobalt-3050	Cobalt-TOTAL	Copper-3050	Copper-TOTAL	Iron-3050	Iron-TOTAL	Lead-3050	Lead-TOTAL	Magnesium-3050	Magnesium-TOTAL	Manganese-3050	Manganese-TOTAL	Mercury-3050	Nickel-3050	Nickel-TOTAL	Potassium-3050
FS2101	TA-63-1A A2	A	Yes	TA-63	27	7.3	7.2	8.1	14	12000	20000	9	14	1700	3700	580	680	NA	5	11	1200
FS2102	TA-63-1A Btb	B	Yes	TA-63	36	6.1	5.8	12	19	16000	28000	13	13	3200	6300	430	400	NA	9	15	1600
FS2103	TA-63-1A Bth	B	Yes	TA-63	30	6.3	7.3	8.4	14	14000	24000	12	15	2400	5100	360	470	NA	4	11	1100
FS2104	TA-63-1A Bw	B	Yes	TA-63	27	8.2	7.9	6.2	12	14000	20000	11	15	2100	4000	630	660	NA	6	11	1100
FS2105	TA-63-2 Btb1	B	Yes	TA-63	26	7.4	6.7	11	17	15000	22000	13	16	2300	4100	640	670	NA	8	14	1700
FS2106	TA-63-2 Btb2	B	Yes	TA-63	22	5.3	5.6	9.4	14	12000	22000	9	15	1900	3300	400	510	NA	5	11	1500
FS2107	TA-63-2 Bth	B	Yes	TA-63	30	16	7.4	8.8	14	17000	22000	16	13	2600	4900	810	520	NA	6	12	1200
FS2108	TA-63-2 Bthk	B	Yes	TA-63	29	4	6.4	8	13	15000	23000	11	13	2600	5100	240	400	NA	5	13	1200
FS2109	TA-63-2 Btk1	B	Yes	TA-63	26	6.2	6.8	6.7	12	13000	20000	8	14	2200	4200	300	370	NA	5	11	1100
FS2110	TA-63-2 Btkb1	B	Yes	TA-63	33	5.7	6.9	11	18	18000	26000	12	15	3100	5300	330	490	NA	7	15	1900
FS2111	TA-63-2 Btkb2	B	No	TA-63	31	7	7.2	11	18	14000	24000	13	16	2400	4800	500	740	NA	10	19	1400
FS2111D1	TA-63-2 Btkb2	B	No	TA-63	NA	NA	NA	NA	NA	NA	NA	NA	NA	NA	NA	NA	NA	NA	NA	NA	NA
FS2111-AVE	Average of FS2111,FS2111D1	B	Yes	TA-63	31	7	7.2	11	18	14000	24000	13	16	2400	4800	500	740	NA	10	19	1400
FS2112	WC-2 TA-16 C2b1a	C	Yes	TA-16	NA	4.2	NA	6.1	NA	9300	NA	9	NA	1200	NA	330	NA	NA	4	NA	1200
FS2113	TA-63-2 Bw	B	No	TA-63	NA	7.7	NA	5.9	NA	14000	NA	13	NA	2000	NA	620	NA	NA	7	NA	1300
FS2113D1	TA-63-2 Bw	B	No	TA-63	NA	8.4	NA	6	NA	13000	NA	12	NA	1900	NA	700	NA	NA	8	NA	1300
FS2113-AVE	Average of FS2113,FS2113D1	B	Yes	TA-63	NA	8.05	NA	5.95	NA	13500	NA	12.5	NA	1950	NA	660	NA	NA	7.5	NA	1300
FS2114	TA-63a A2	A	Yes	TA-63	NA	6.3	NA	9.5	NA	11000	NA	19	NA	1700	NA	420	NA	NA	7.8	NA	1700
FS2115	TA-63a Bw1	B	Yes	TA-63	27	6	13	7.1	10	10000	20000	17	29	1600	3500	460	540	NA	6.2	12	1500
FS2116	TA-63a CB	C	No	TA-63	14	3.1	5.9	5.7	4.7	11000	16000	17	30	1500	2300	230	310	NA	5.7	7.3	1000
FS2116D1	TA-63a CB	C	No	TA-63	NA	NA	NA	NA	NA	NA	NA	NA	NA	NA	NA	NA	NA	NA	NA	NA	NA
FS2116-AVE	Average of FS2116,FS2116D1	C	Yes	TA-63	14	3.1	5.9	5.7	4.7	11000	16000	17	30	1500	2300	230	310	NA	5.7	7.3	1000
FS2118	TA-63c A1	A	Yes	TA-63	23	5.5	11	9.9	13	11000	17000	27	37	2000	3300	410	460	NA	8.3	10	1900
FS2119	TA-63c A2	A	No	TA-63	23	5.1	11	7.7	11	9600	17000	22	36	1700	3500	360	450	NA	5.8	10	1500
FS2119D1	TA-63c A2	A	No	TA-63	NA	NA	NA	NA	NA	NA	NA	NA	NA	NA	NA	NA	NA	NA	NA	NA	NA
FS2119-AVE	Average of FS2119,FS2119D1	A	Yes	TA-63	23	5.1	11	7.7	11	9600	17000	22	36	1700	3500	360	450	NA	5.8	10	1500
FS2120	TA-63c Bw1	B	Yes	TA-63	26	5.6	12	7.4	11	9800	17000	14	28	1400	3300	450	540	NA	7.2	11	1500
FS2121	TA-63c Bw2	B	Yes	TA-63	22	4.8	11	5.7	9.2	8500	15000	16	27	1200	2800	360	440	NA	5.9	9	1200
FS2122	TA-63c Bw3	B	Yes	TA-63	22	11	10	5.7	8.4	10000	17000	14	47	1400	2700	860	440	NA	8	10	1300
FS2123	WC-1 Btb1c	B	Yes	TA-16	20	4.3	8.4	7	8.4	11000	18000	14	27	2000	3300	250	360	NA	6.9	10	1700
FS2124	WC-1 Btb2	B	Yes	TA-16	21	3.9	8.8	6	6.9	11000	20000	14	28	2000	3700	180	290	NA	7.2	9	1700
FS2125	WC-1 Bt2	B	Yes	TA-16	26	7	11	7.9	9.5	14000	21000	19	31	2800	4700	470	410	NA	11	13	2600
FS2126	WC-1 Bt2b2	B	Yes	TA-16	28	4.8	10	7.2	8.3	14000	22000	18	29	2900	4900	250	350	NA	8.4	14	2000
FS2127	WC-1 Bt3b2	B	No	TA-16	19	NA	6.5	NA	4.6	NA	21000	NA	30	NA	4300	NA	370	NA	NA	12	NA
FS2127D1	WC-1 Bt3b2	B	No	TA-16	NA	2.6	NA	5.1	NA	9200	NA	13	NA	2000	NA	230	NA	NA	8.6	NA	1400
FS2127-AVE	Average of FS2127,FS2127D1	B	Yes	TA-16	19	2.6	6.5	5.1	4.6	9200	21000	13	30	2000	4300	230	370	NA	8.6	12	1400
FS2128	WC-1 Bt4b2	B	No	TA-16	15	2.6	6.4	5.6	4.1	8400	20000	11	20	1600	3500	230	430	NA	7	9.9	1100
FS2128D1	WC-1 Bt4b2	B	No	TA-16	NA	NA	NA	NA	NA	NA	NA	NA	NA	NA	NA	NA	NA	NA	NA	NA	NA
FS2128-AVE	Average of FS2128,FS2128D1	B	Yes	TA-16	15	2.6	6.4	5.6	4.1	8400	20000	11	20	1600	3500	230	430	NA	7	9.9	1100
FS2129	WC-1 Bt5b2	B	No	TA-16	11	1.6	4.8	5.2	3	10000	18000	12	25	1500	2600	250	400	NA	6.4	7.5	1100
FS2129D1	WC-1 Bt5b2	B	No	TA-16	NA	2	NA	5	NA	9500	NA	12	NA	1500	NA	260	NA	NA	5.3	NA	1100
FS2129-AVE	Average of FS2129,FS2129D1	B	Yes	TA-16	11	1.8	4.8	5.1	3	9750	18000	12	25	1500	2600	255	400	NA	5.85	7.5	1100
FS2130	WC-2 Bt1b1b	B	No	TA-16	22	4.5	9.8	6.9	9	8800	20000	9.2	21	1600	3900	260	420	NA	5.9	11	1400
FS2130D1	WC-2 Bt1b1b	B	No	TA-16	NA	4.8	NA	6.4	NA	9900	NA	9	NA	1700	NA	280	NA	NA	7.3	NA	1400
FS2130-AVE	Average of FS2130,FS2130D1	B	Yes	TA-16	22	4.65	9.8	6.65	9	9350	20000	9.1	21	1650	3900	270	420	NA	6.6	11	1400
FS2131	WC-2 Bt2b1b	B	Yes	TA-16	19	4.2	9.2	5.3	6.7	9000	18000	13	19	1500	3200	310	440	NA	6.2	9.8	1300
FS2132	WC-2 Bt2b1c	B	Yes	TA-16	17	3.3	7.2	4.9	5.7	8500	18000	9.9	23	1200	2800	170	290	NA	4.4	8.8	1200
FS2133	WC-2 Bt3b1c	B	No	TA-16	15	3.1	7.9	4	4.4	9400	17000	12	23	1200	2400	160	300	NA	3.2	5.7	1100
FS2133D1	WC-2 Bt3b1c	B	No	TA-16	NA	NA	NA	NA	NA	NA	NA	NA	NA	NA	NA	NA	NA	NA	NA	NA	NA
FS2133-AVE	Average of FS2133,FS2133D1	B	Yes	TA-16	15	3.1	7.9	4	4.4	9400	17000	12	23	1200	2400	160	300	NA	3.2	5.7	1100
FS2134	WC-2 C3b1a	C	Yes	TA-16	16	3.8	8.3	5.2	6.6	7000	15000	5.6	16	1100	2300	240	420	NA	3.6	6.5	960
FS2135	WC-2 C3b1a	C	Yes	TA-16	14	1.4	5.9	4.5	6.7	6900	13000	9	20	890	1900	82	200	NA	2.4	3.4	970
FS2136	WC-3 2c	C	Yes	TA-16	31	3.7	12	4.1	5.7	8100	22000	12	25	1600	5500	240	550	NA	9.2	17	970
FS2137	WC-3 Ap	A	Yes	TA-16	21	14	11	3.1	4.9	8400	16000	17	22	1000	2900	950	430	NA	4.2	7.6	1000
FS2138	WC-3 Bc	B	Yes	TA-16	27	4.9	12	6.9	9.1	12000	23000	15	26	2400	5500	300	500	NA	9.1	13	2000
FS2139	WC-3 Bt1	B	Yes	TA-16	28	4.6	11	5.6	7.4	13000	24000	11	26	2100	4900	280	440	NA	8.5	14	2100
FS2140	WC-3 Bt3	B	Yes	TA-16	28	5.1	12	6.3	9.3	13000	25000	13	32	2800	6000	360	580	NA	7.4	14	2300
FS2141	WC-3 Bt4	B	Yes	TA-16	24	5.3	11	7.4	9	12000	19000	15	23	2600	4900	310	480	NA	7.4	11	2100
FS2142	TA-63-2 Btb1	B	Yes	TA-63	29	6.8	14	9.6	14	13000	22000	17	31	2300	4200	620	670	NA	11	15	1800
FS2143	TA-63-2 Btb2	B	Yes	TA-63	23	3.1	7.6	7.4	9.2	8700	17000	12	21	1700	3200	200	300	NA	6.8	9	1300
FS2144	TA-63-2 Bth	B	No	TA-63	32	8.1	14	6.8	11	13000	23000	18	25	2200	5000	480	500	NA	7	12	1000
FS2144D1	TA-63-2 Bth	B	No	TA-63	NA	NA	NA	NA	NA	NA	NA	NA	NA	NA	NA	NA	NA	NA	NA	NA	NA
FS2144-AVE	Average of FS2144,FS2144D1	B	Yes	TA-63	32	8.1	14	6.8	11	13000	23000	18	25	2200	5000	480	500	NA	7	12	1000
FS2145	TA-63-2 BthK	B	Yes	TA-63	30	4.6	11	6.3	9.1	12000	22000	17	27	2200	5000	220	370	NA	6.6	12	990
FS2146	TA-63-2 Btk1	B	Yes	TA-63	26	8.3	14	4.2	8.4	9300	18000	12	29	1800	3800	340	480	NA	6.7	8.3	750
FS2147	TA-63-2 Btkb1	B	Yes	TA-63	35	6.4	13	8.6	13	13000	25000	14	26	2400	5200	350	460	NA	7.6	14	1400
FS2148	TA-63-2 Btkb2	B	Yes	TA-63	32	5.6	14	9.8	14	14000	24000	18	27	2400	4800	370	550	NA	9.4	15	1500
FS2149	TA-63-2 Bw	B	Yes	TA-63	28	7.1	15	5.2	9.7	13000	20000	14	28	1900	3800	560	690	NA	9.2	11	1200
FS2150	TA-63c A2	A	Yes	TA-63	25	5.9	12	6.6	10	11000	19000	19	26	1500	3400	410	560	NA	8.3	9.8	1500
FS2151	TA-63c BW1	B	Yes	TA-63	26	6.7	13	5.1	7.9	14000	20000	19	27	1700	3400	490	580	NA	7.6	9.6	1500
FS2152	TA-63c Bw2	B	Yes	TA-63	26	6	13	5	7.6	12000	20000	12	24	1700	3600	380	530	NA	8.8	10	1400
FS2153	TA-63c CB	C	Yes	TA-63	11	4.9	7	2.8	2.7	7900	15000	14	27	1100	2100	440	540	NA	5.1	6.7	710
FS2154	TA-63c A1	A	Yes	TA-63	17	4.9	9	5.9	7.8	9400	15000	15	29	1300	2500	390	500	NA	6.1	7.8	1400
FS2155	TA-63c Bw1	B	Yes	TA-63	23	5.5	12	4.2	8.2	10000	17000	11	25	1300	3000	430	550	NA	7.2	8.8	1200
FS2156	TA-63c Bw3	B	Yes	TA-63	25	5.4	12	4.5	7.9	10000	19000	8	25	1300	3000	390	560	NA	7.2	10	1200
FS2157	TA-67 E1 2BCb	B	Yes	TA-67	25	5	12	5	7.7	13000	22000	14	26	2100	5000	300	470	NA	8.6	12	1900
FS2158	TA-67 E1 2Bwb	B	Yes	TA-67	29	7.1	13	5.8	9.2	15000	24000	19	23	2500	5500	490	530	NA	11	13	2200
FS2159	TA-67 E1 A	A	Yes	TA-67	25	5.8	12	6.5	10	11000	19000	18	27	1600	4000	440	570	NA	8	10	1700
FS2160	TA-67 E1 BA	B	Yes	TA-67	25	6	12	6	8.6	11000	19000	20	27	1600	4000	420	560	NA	7.5	10	1700
FS2161	TA-67 E1 Bt1	B	Yes	TA-67	28	6.6	14	4.4	8.1	13000	22000	14	24	2200	4700	390	530	NA	9.7	11	1900
FS2162	TA-67 E1 Bt2	B	No	TA-67	31	6.7	14	7.1	9.6	16000	25000	21	28	2600	5800	370	540	NA	12	15	2300
FS2162D1	TA-67 E1 Bt2	B	No	TA-67	NA	NA	NA	NA	NA	NA	NA	NA	NA	NA	NA	NA	NA	NA	NA	NA	NA
FS2162-AVE	Average of FS2162,FS2162D1	B	Yes	TA-67	31	6.7	14	7.1	9.6	16000	25000	21	28	2600	5800	370	540	NA	12	15	2300

BG Soil - Data list for EPA

Sample ID	SAMPLE DESCRIPTION	Horizon	Included	Location	Potassium-TOTAL	Selenium-3050	Sodium-3050	Sodium-TOTAL	Sulfate-3050	Tantalum-3050	Tantalum-TOTAL	Thallium-3050	Thallium-TOTAL	Thorium-3050	Thorium-TOTAL	Uranium-3050	Uranium-TOTAL	Vanadium-3050	Vanadium-TOTAL	Zinc-3050
FS2101	TA-63-1A A2	A	Yes	TA-63	20000	NA	89	12000	15	<0.2	2.3	<1	0.7	7.5	14	1.9	4.2	26	57	29
FS2102	TA-63-1A Btb	B	Yes	TA-63	21000	NA	330	9200	52	<0.2	2.9	<1	1	11.3	18.1	1	3.5	28	69	37
FS2103	TA-63-1A Bth	B	Yes	TA-63	18000	NA	190	11000	18	<0.2	2.8	<1	0.8	9.7	17.6	0.9	3.3	27	62	27
FS2104	TA-63-1A Bw	B	Yes	TA-63	21000	NA	110	12000	14	<0.2	2.2	<1	0.6	8.4	14.9	1.4	4.1	30	60	30
FS2105	TA-63-2 Btb1	B	Yes	TA-63	24000	NA	240	13000	71	<0.2	2.9	<1	0.9	9.1	17.3	1.2	4.2	31	58	47
FS2106	TA-63-2 Btb2	B	Yes	TA-63	27000	NA	250	16000	50	<0.2	2.4	<1	0.7	7.5	14.9	0.9	3.9	17	51	43
FS2107	TA-63-2 Bth	B	Yes	TA-63	20000	NA	150	11000	17	<0.2	2.5	<1	0.7	9.1	16.8	1.1	3.8	31	60	35
FS2108	TA-63-2 Bthk	B	Yes	TA-63	19000	NA	240	12000	37	<0.2	2.9	0.4	0.7	10.3	17.9	0.9	3.2	28	58	32
FS2109	TA-63-2 Btk1	B	Yes	TA-63	20000	NA	210	13000	37	<0.2	2.5	<1	0.8	8.5	16.6	0.9	3.3	25	52	28
FS2110	TA-63-2 Btkb1	B	Yes	TA-63	21000	NA	280	10000	62	<0.2	2.8	<1	1	10.6	18.2	1.1	3.9	31	68	44
FS2111	TA-63-2 Btkb2	B	No	TA-63	22000	NA	250	11000	59	<0.2	3	<1	1	9.7	19.9	1	4	27	63	NA
FS2111D1	TA-63-2 Btkb2	B	No	TA-63	NA	NA	NA	NA	NA	NA	3	NA	1	NA	18.8	NA	4	NA	NA	NA
FS2111-AVE	Average of FS2111,FS2111D1	B	Yes	TA-63	22000	NA	250	11000	59	<0.2	3	<1	1	9.7	19.35	1	4	27	63	NA
FS2112	WC-2 TA-16 C2b1a	C	Yes	TA-16	NA	NA	98	NA	14	<0.2	NA	<1	NA	7.4	NA	0.9	NA	16	NA	28
FS2113	TA-63-2 Bw	B	No	TA-63	NA	NA	110	NA	20	<0.2	NA	<1	NA	8.5	NA	1.4	NA	27	NA	31
FS2113D1	TA-63-2 Bw	B	No	TA-63	NA	NA	110	NA	NA	<0.2	NA	<1	NA	8.6	NA	1.6	NA	26	NA	30
FS2113-AVE	Average of FS2113,FS2113D1	B	Yes	TA-63	NA	NA	110	NA	20	<0.2	NA	<1	NA	8.55	NA	1.5	NA	26.5	NA	30.5
FS2114	TA-63a A2	A	Yes	TA-63	NA	NA	75	NA	15	<0.2	NA	0.4	NA	7.5	NA	7.4 (X)	NA	23	NA	29
FS2115	TA-63a Bw1	B	Yes	TA-63	24000	NA	71	15000	14	<0.2	2.8	0.2	0.7	7.6	17.3	1	4.6	21	56	26
FS2116	TA-63a CB	C	No	TA-63	35000	NA	120	24000	13	<0.2	4.1	<0.2	0.6	7.8	16.7	0.9	4.7	14	30	36
FS2116D1	TA-63a CB	C	No	TA-63	NA	NA	NA	NA	NA	NA	NA	NA	NA	NA	NA	NA	NA	NA	NA	NA
FS2116-AVE	Average of FS2116,FS2116D1	C	Yes	TA-63	35000	NA	120	24000	13	<0.2	4.1	<0.2	0.6	7.8	16.7	0.9	4.7	14	30	36
FS2118	TA-63c A1	A	Yes	TA-63	24000	NA	300	15000	17	<0.2	2.3	0.2	0.7	6.5	15.1	6.3 (X)	12.4 (X)	21	47	36
FS2119	TA-63c A2	A	No	TA-63	24000	NA	100	15000	15	<0.2	2.4	0.2	0.8	5.8	15	2.8	9.4	18	48	30
FS2119D1	TA-63c A2	A	No	TA-63	NA	NA	NA	NA	NA	NA	2.4	NA	NA	NA	NA	NA	NA	NA	NA	NA
FS2119-AVE	Average of FS2119,FS2119D1	A	Yes	TA-63	24000	NA	100	15000	15	<0.2	2.4	0.2	0.8	5.8	15	2.8 (X)	9.4 (X)	18	48	30
FS2120	TA-63c Bw1	B	Yes	TA-63	23000	NA	76	15000	15	<0.2	2.3	0.2	0.7	6.5	15.8	1	4.6	20	51	25
FS2121	TA-63c Bw2	B	Yes	TA-63	23000	NA	99	16000	15	<0.2	2.2	<0.2	0.6	5.6	15	0.7	4.1	18	46	19
FS2122	TA-63c Bw3	B	Yes	TA-63	25000	NA	130	16000	17	<0.2	2.4	0.2	0.6	6.6	15.6	0.9	4.2	21	47	26
FS2123	WC-1 Btb1c	B	Yes	TA-16	30000	NA	160	21000	15	<0.2	2.6	<0.2	0.6	7.4	15.7	1	4.1	15	42	34
FS2124	WC-1 Btb2	B	Yes	TA-16	30000	NA	250	19000	30	<0.2	2.7	<0.2	0.7	8.5	17.2	0.7	3.7	17	44	37
FS2125	WC-1 Bt2	B	Yes	TA-16	24000	NA	460	15000	139	<0.2	2.7	0.2	0.8	9.2	18.5	1.1	4.3	23	56	37
FS2126	WC-1 Bt2b2	B	Yes	TA-16	25000	NA	340	15000	34	<0.2	2.3	0.2	0.7	9.2	18	0.7	4	20	53	40
FS2127	WC-1 Bt3b2	B	No	TA-16	32000	NA	NA	22000	29	<0.2	2.8	<0.2	0.5	7.2	15.3	0.6	3.5	NA	36	NA
FS2127D1	WC-1 Bt3b2	B	No	TA-16	NA	NA	290	NA	NA	NA	2.7	NA	0.5	NA	16	NA	3.3	12	NA	33
FS2127-AVE	Average of FS2127,FS2127D1	B	Yes	TA-16	32000	NA	290	22000	29	<0.2	2.75	<0.2	0.5	7.2	15.65	0.6	3.4	12	36	33
FS2128	WC-1 Bt4b2	B	No	TA-16	33000	NA	240	23000	23	<0.2	3.1	<0.2	0.5	6.4	14.9	0.5	3.5	9.5	30	31
FS2128D1	WC-1 Bt4b2	B	No	TA-16	NA	NA	NA	NA	NA	NA	NA	NA	NA	NA	NA	NA	NA	NA	NA	NA
FS2128-AVE	Average of FS2128,FS2128D1	B	Yes	TA-16	33000	NA	240	23000	23	<0.2	3.1	<0.2	0.5	6.4	14.9	0.5	3.5	9.5	30	31
FS2129	WC-1 Bt5b2	B	No	TA-16	36000	NA	250	26000	24	<0.2	3.5	<0.2	0.5	7.9	15.7	0.6	3.9	9.9	23	45
FS2129D1	WC-1 Bt5b2	B	No	TA-16	NA	NA	280	NA	NA	<0.2	NA	<0.2	NA	8	NA	0.6	NA	8.5	NA	43
FS2129-AVE	Average of FS2129,FS2129D1	B	Yes	TA-16	36000	NA	265	26000	24	<0.2	3.5	<0.2	0.5	7.95	15.7	0.6	3.9	9.2	23	44
FS2130	WC-2 Bt1b1b	B	No	TA-16	27000	NA	140	17000	23	<0.2	2.3	0.2	0.7	7.7	16.4	0.7	4.5	16	48	28
FS2130D1	WC-2 Bt1b1b	B	No	TA-16	NA	NA	130	NA	NA	<0.2	NA	0.2	NA	7.7	NA	0.7	NA	17	NA	31
FS2130-AVE	Average of FS2130,FS2130D1	B	Yes	TA-16	27000	NA	135	17000	23	<0.2	2.3	0.2	0.7	7.7	16.4	0.7	4.5	16.5	48	29.5
FS2131	WC-2 Bt2b1b	B	Yes	TA-16	29000	NA	140	18000	17	<0.2	2.4	<0.2	0.6	8.4	16	0.9	4.5	15	41	30
FS2132	WC-2 Bt2b1c	B	Yes	TA-16	31000	NA	140	21000	16	<0.2	2.9	<0.2	0.6	8.2	17.1	1	4.7	13	36	28
FS2133	WC-2 Bt3b1c	B	No	TA-16	32000	NA	170	22000	16	<0.2	3.3	<0.2	0.6	9	16.2	1	4.8	13	32	34
FS2133D1	WC-2 Bt3b1c	B	No	TA-16	NA	NA	NA	NA	NA	NA	NA	NA	NA	NA	NA	NA	NA	NA	NA	NA
FS2133-AVE	Average of FS2133,FS2133D1	B	Yes	TA-16	32000	NA	170	22000	16	<0.2	3.3	<0.2	0.6	9	16.2	1	4.8	13	32	34
FS2134	WC-2 C3b1a	C	Yes	TA-16	28000	NA	96	19000	15	<0.2	2.4	<0.2	0.6	7.6	16.7	0.7	4.5	14	37	23
FS2135	WC-2 C3b1a	C	Yes	TA-16	30000	NA	100	20000	21	<0.2	3.6	<0.2	0.6	7	13.8	0.6	3.8	10	28	26
FS2136	WC-3 2c	C	Yes	TA-16	27000	NA	370	22000	90	<0.2	3.1	<0.2	0.6	5.7	14	1	4.3	14	44	24
FS2137	WC-3 Ap	A	Yes	TA-16	24000	NA	87	17000	15	<0.2	2.4	0.2	0.7	7.2	13	1	4.2	20	42	18
FS2138	WC-3 Bc	B	Yes	TA-16	22000	NA	770	14000	198	<0.2	3	0.2	0.8	10.6	18.7	2.1	6.2	20	54	31
FS2139	WC-3 Bt1	B	Yes	TA-16	22000	NA	270	13000	19	<0.2	3.6	0.2	0.8	11	19.2	1.3	5	20	56	30
FS2140	WC-3 Bt3	B	Yes	TA-16	28000	NA	580	17000	20	<0.2	3.5	0.2	0.9	9.8	20	1.4	5.8	24	62	36
FS2141	WC-3 Bt4	B	Yes	TA-16	19000	NA	700	11000	265	<0.2	2.1	0.2	0.7	11	15.9	1.9	4.8	20	50	32
FS2142	TA-63-2 Btb1	B	Yes	TA-63	24000	NA	260	13000	66	<0.2	2.7	0.4	1	10.2	17.2	1.1	4.7	26	62	45
FS2143	TA-63-2 Btb2	B	Yes	TA-63	24000	NA	220	14000	43	<0.2	2.1	0.2	0.7	8.8	13.5	0.9	3.4	13	39	36
FS2144	TA-63-2 Bth	B	No	TA-63	20000	NA	150	11000	15	<0.2	2.4	0.2	0.8	9.9	17.1	1	4.4	28	67	27
FS2144D1	TA-63-2 Bth	B	No	TA-63	NA	NA	NA	NA	NA	NA	2.3	NA	0.8	NA	17.4	NA	4.6	NA	NA	NA
FS2144-AVE	Average of FS2144,FS2144D1	B	Yes	TA-63	20000	NA	150	11000	15	<0.2	2.35	0.2	0.8	9.9	17.25	1	4.5	28	67	27
FS2145	TA-63-2 BthK	B	Yes	TA-63	18000	NA	250	11000	31	<0.2	4	0.4	0.8	12	17.2	0.9	3.7	22	57	24
FS2146	TA-63-2 Btk1	B	Yes	TA-63	20000	NA	200	12000	39	<0.2	3.2	0.2	0.8	9.7	15.5	0.7	3.8	20	52	21
FS2147	TA-63-2 Btkb1	B	Yes	TA-63	20000	NA	280	9600	64	<0.2	3.3	0.4	1.1	12	17.9	1	4.3	26	68	31
FS2148	TA-63-2 Btkb2	B	Yes	TA-63	21000	NA	280	10000	9	<0.5	3.6	0.4	1.1	7.7	18	1.9	4.3	27	65	35
FS2149	TA-63-2 Bw	B	Yes	TA-63	19000	NA	97	11000	16	<0.5	3.2	0.2	0.8	6.5	17	2.8 (X)	6.4 (X)	29	61	28
FS2150	TA-63c A2	A	Yes	TA-63	21000	NA	66	13000	16	<0.5	3.3	0.2	0.8	7	17.7	5.5 (X)	8.4 (X)	21	50	28
FS2151	TA-63c BW1	B	Yes	TA-63	22000	NA	93	13000	14	<0.5	3.7	0.2	0.7	8.4	18.9	1.1	4.8	26	53	33
FS2152	TA-63c Bw2	B	Yes	TA-63	21000	NA	100	12000	14	<0.5	3.8	0.2	0.8	9.1	19.8	1.1	5	24	55	30
FS2153	TA-63c CB	C	Yes	TA-63	32000	NA	130	21000	15	<0.5	5.6	<0.2	0.6	5.2	17	0.5	3.3	10	23	37
FS2154	TA-63c A1	A	Yes	TA-63	26000	NA	110	16000	17	<0.5	4.4	0.2	0.7	5.9	17.9	4.7 (X)	12.1 (X)	17	34	33
FS2155	TA-63c Bw1	B	Yes	TA-63	22000	NA	78	14000	15	<0.5	2.9	0.2	0.6	6	16.4	0.7	4.4	21	46	24
FS2156	TA-63c Bw3	B	Yes	TA-63	24000	NA	130	15000	16	<0.5	3.7	0.2	0.7	6	19.3	0.7	4.5	20	49	26
FS2157	TA-67 E1 2BCb	B	Yes	TA-67	20000	NA	230	13000	27	<0.5	4.2	0.2	0.8	8.8	24.6	0.9	5	24	54	27
FS2158	TA-67 E1 2Bwb	B	Yes	TA-67	19000	NA	150	12000	23	<0.5	4.3	0.4	0.9	11	26	1	5	28	61	31
FS2159	TA-67 E1 A	A	Yes	TA-67	20000	NA	81	13000	15	<0.5	3.5	0.2	0.8	8	22.6	6.4 (X)	17.7 (X)	21	52	28
FS2160	TA-67 E1 BA	B	Yes	TA-67	20000	NA	74	13000	16	<0.5	3.9	0.2	0.8	9	21.8	6.4 (X)	11.9 (X)	24	51	26
FS2161	TA-67 E1 Bt1	B	Yes	TA-67	20000	NA	93	12000	17	<0.5	3.8	0.2	0.8	8.6	23.5	1	5.3	27	61	26
FS2162	TA-67 E1 Bt2	B	No	TA-67	19000	NA	130	11000	14	<0.5	4	0.4	0.9	10.5	27.6	0.9	5.1	29	65	33
FS2162D1	TA-67 E1 Bt2	B	No	TA-67	NA	NA	NA	NA	NA	NA	4.3	NA	0.8	NA	26.7	NA	3.1	NA	NA	NA
FS2162-AVE	Average of FS2162,FS2162D1	B	Yes	TA-67	19000	NA	130	11000	14	<0.5	4.15	0.4	0.85	10.5	27.15	0.9	4.1	29	65	33

BG Soil - Data list for EPA

Sample ID	SAMPLE DESCRIPTION	Horizon	Included	Location	Zinc-TOTAL
FS2101	TA-63-1A A2	A	Yes	TA-63	53
FS2102	TA-63-1A Btb	B	Yes	TA-63	76
FS2103	TA-63-1A Bth	B	Yes	TA-63	55
FS2104	TA-63-1A Bw	B	Yes	TA-63	48
FS2105	TA-63-2 Btb1	B	Yes	TA-63	71
FS2106	TA-63-2 Btb2	B	Yes	TA-63	69
FS2107	TA-63-2 Bth	B	Yes	TA-63	54
FS2108	TA-63-2 Bthk	B	Yes	TA-63	53
FS2109	TA-63-2 Btk1	B	Yes	TA-63	47
FS2110	TA-63-2 Btkb1	B	Yes	TA-63	70
FS2111	TA-63-2 Btkb2	B	No	TA-63	67
FS2111D1	TA-63-2 Btkb2	B	No	TA-63	70
FS2111-AVE	Average of FS2111,FS2111D1	B	Yes	TA-63	68.5
FS2112	WC-2 TA-16 C2b1a	C	Yes	TA-16	NA
FS2113	TA-63-2 Bw	B	No	TA-63	NA
FS2113D1	TA-63-2 Bw	B	No	TA-63	NA
FS2113-AVE	Average of FS2113,FS2113D1	B	Yes	TA-63	NA
FS2114	TA-63a A2	A	Yes	TA-63	NA
FS2115	TA-63a Bw1	B	Yes	TA-63	51
FS2116	TA-63a CB	C	No	TA-63	60
FS2116D1	TA-63a CB	C	No	TA-63	NA
FS2116-AVE	Average of FS2116,FS2116D1	C	Yes	TA-63	60
FS2118	TA-63c A1	A	Yes	TA-63	54
FS2119	TA-63c A2	A	No	TA-63	46
FS2119D1	TA-63c A2	A	No	TA-63	NA
FS2119-AVE	Average of FS2119,FS2119D1	A	Yes	TA-63	46
FS2120	TA-63c Bw1	B	Yes	TA-63	46
FS2121	TA-63c Bw2	B	Yes	TA-63	41
FS2122	TA-63c Bw3	B	Yes	TA-63	26
FS2123	WC-1 Btb1c	B	Yes	TA-16	62
FS2124	WC-1 Btb2	B	Yes	TA-16	71
FS2125	WC-1 Bt2	B	Yes	TA-16	57
FS2126	WC-1 Bt2b2	B	Yes	TA-16	70
FS2127	WC-1 Bt3b2	B	No	TA-16	74
FS2127D1	WC-1 Bt3b2	B	No	TA-16	NA
FS2127-AVE	Average of FS2127,FS2127D1	B	Yes	TA-16	74
FS2128	WC-1 Bt4b2	B	No	TA-16	72
FS2128D1	WC-1 Bt4b2	B	No	TA-16	NA
FS2128-AVE	Average of FS2128,FS2128D1	B	Yes	TA-16	72
FS2129	WC-1 Bt5b2	B	No	TA-16	74
FS2129D1	WC-1 Bt5b2	B	No	TA-16	NA
FS2129-AVE	Average of FS2129,FS2129D1	B	Yes	TA-16	74
FS2130	WC-2 Bt1b1b	B	No	TA-16	59
FS2130D1	WC-2 Bt1b1b	B	No	TA-16	NA
FS2130-AVE	Average of FS2130,FS2130D1	B	Yes	TA-16	59
FS2131	WC-2 Bt2b1b	B	Yes	TA-16	57
FS2132	WC-2 Bt2b1c	B	Yes	TA-16	61
FS2133	WC-2 Bt3b1c	B	No	TA-16	61
FS2133D1	WC-2 Bt3b1c	B	No	TA-16	NA
FS2133-AVE	Average of FS2133,FS2133D1	B	Yes	TA-16	61
FS2134	WC-2 C3b1a	C	Yes	TA-16	49
FS2135	WC-2 Cb1a	C	Yes	TA-16	44
FS2136	WC-3 2c	C	Yes	TA-16	63
FS2137	WC-3 Ap	A	Yes	TA-16	41
FS2138	WC-3 Bc	B	Yes	TA-16	60
FS2139	WC-3 Bt1	B	Yes	TA-16	58
FS2140	WC-3 Bt3	B	Yes	TA-16	70
FS2141	WC-3 Bt4	B	Yes	TA-16	52
FS2142	TA-63-2 Btb1	B	Yes	TA-63	71
FS2143	TA-63-2 Btb2	B	Yes	TA-63	67
FS2144	TA-63-2 Bth	B	No	TA-63	51
FS2144D1	TA-63-2 Bth	B	No	TA-63	NA
FS2144-AVE	Average of FS2144,FS2144D1	B	Yes	TA-63	51
FS2145	TA-63-2 BthK	B	Yes	TA-63	47
FS2146	TA-63-2 Btk1	B	Yes	TA-63	41
FS2147	TA-63-2 Btkb1	B	Yes	TA-63	66
FS2148	TA-63-2 Btkb2	B	Yes	TA-63	66
FS2149	TA-63-2 Bw	B	Yes	TA-63	46
FS2150	TA-63c A2	A	Yes	TA-63	49
FS2151	TA-63c BW1	B	Yes	TA-63	51
FS2152	TA-63c Bw2	B	Yes	TA-63	50
FS2153	TA-63c CB	C	Yes	TA-63	59
FS2154	TA-63c A1	A	Yes	TA-63	53
FS2155	TA-63c Bw1	B	Yes	TA-63	42
FS2156	TA-63c Bw3	B	Yes	TA-63	50
FS2157	TA-67 E1 2BCb	B	Yes	TA-67	48
FS2158	TA-67 E1 2Bwb	B	Yes	TA-67	52
FS2159	TA-67 E1 A	A	Yes	TA-67	45
FS2160	TA-67 E1 BA	B	Yes	TA-67	46
FS2161	TA-67 E1 Bt1	B	Yes	TA-67	47
FS2162	TA-67 E1 Bt2	B	No	TA-67	57
FS2162D1	TA-67 E1 Bt2	B	No	TA-67	NA
FS2162-AVE	Average of FS2162,FS2162D1	B	Yes	TA-67	57

BG Soil - Data list for EPA

Sample ID	SAMPLE DESCRIPTION	Horizon	Included	Location	Aluminium-3050	Aluminium-TOTAL	Antimony-3050	Antimony-TOTAL	Arsenic-3050	Arsenic-TOTAL	Barium-3050	Barium-TOTAL	Beryllium-3050	Beryllium-TOTAL	Cadmium-TOTAL	Cadmium-3050	Calcium-3050	Calcium-TOTAL	Chlorine-	Chromium-3050
FS2163	TA-67 E1 Bw	B	No	TA-67	14000	65000	<1	0.9	3	7	180	620	0.89	2.7	NA	NA	1800	7300	9	9.9
FS2163D1	TA-67 E1 Bw	B	No	TA-67	NA	66000	NA	1	NA	NA	NA	620	NA	2.4	NA	NA	NA	7500	NA	NA
FS2163-AVE	Average of FS2163,FS2163D1	B	Yes	TA-67	14000	65500	<1	0.95	3	7	180	620	0.89	2.55	NA	NA	1800	7400	9	9.9
FS2164	TA-67 E3 2BAb2	B	Yes	TA-67	22000	81000	<1	0.9	5	12	190	550	1.5	3	NA	NA	2500	6700	9	13
FS2165	TA-67 E3 2BC1b1	B	Yes	TA-67	15000	73000	<1	0.8	4	8	170	580	1.1	2.9	NA	NA	1900	7700	12	9.2
FS2166	TA-67 E3 2BC2b1	B	No	TA-67	16000	72000	<1	0.7	4	7	270	650	1.1	2.8	NA	NA	1900	8100	15	10
FS2166D1	TA-67 E3 2BC2b1	B	No	TA-67	NA	NA	<1	NA	4	NA	NA	NA	NA	NA	NA	NA	NA	NA	NA	NA
FS2166-AVE	Average of FS2166,FS2166D1	B	Yes	TA-67	16000	72000	<1	0.7	4	7	270	650	1.1	2.8	NA	NA	1900	8100	15	10
FS2167	TA-67 E3 2Bt1b1	B	No	TA-67	27000	81000	<1.3	0.8	9	7	220	560	1.6	3.1	NA	NA	2700	6700	9	14
FS2167D1	TA-67 E3 2Bt1b1	B	No	TA-67	22000	NA	<1.4	NA	NA	NA	210	NA	1.6	NA	NA	NA	2800	NA	NA	12
FS2167-AVE	Average of FS2167,FS2167D1	B	Yes	TA-67	24500	81000	<1.4	0.8	9	7	215	560	1.6	3.1	NA	NA	2750	6700	9	13
FS2168	TA-67 E3 2Bt2b1	B	Yes	TA-67	20000	77000	<1.4	0.9	4	5	180	550	1.3	3	NA	NA	2200	7400	10	10
FS2169	TA-67 E3 3Bt1b2	B	Yes	TA-67	12000	66000	<1.4	0.8	4	7	250	640	0.84	2.6	NA	NA	6300	12000	24	7.9
FS2170	TA-67 E3 3Bt2b2	B	Yes	TA-67	10000	53000	<1.4	0.9	4	5	290	680	0.76	1.9	NA	NA	7500	11000	24	46 (X)
FS2171	TA-67 E3 3Bt3b2	B	Yes	TA-67	11000	67000	<1.3	0.8	5	10	94	370	1.2	2.5	NA	NA	3600	5100	57	9.3
FS2172	TA-67 E3 A	A	Yes	TA-67	9800	56000	<1.4	0.7	3	7	140	610	0.58	2.1	NA	NA	1200	7700	9	9
FS2173	TA-67 E5 2BC15b1	B	Yes	TA-67	21000	74000	<1.4	0.6	4	7	270	610	1.1	3	NA	NA	5200	12000	10	11
FS2174	TA-67 E5 2BC25b1	B	Yes	TA-67	17000	68000	<1.4	0.7	3	6	210	580	0.98	3	NA	NA	6400	14000	10	9.2
FS2175	TA-67 E5 2Bt1b1	B	Yes	TA-67	17000	66000	<1.4	1.4	4	9	220	640	1.1	2.6	NA	NA	2300	7800	8	10
FS2176	TA-67 E5 2Bt2b1	B	Yes	TA-67	15000	63000	<1.4	0.7	4	8	250	620	1.1	2.6	NA	NA	2600	7700	9	11
FS2177	TA-67 E5 2Bt3b1	B	Yes	TA-67	16000	70000	<1.3	0.7	3	8	250	610	1	8700 (X)	NA	NA	3600	10000	10	8.8
FS2178	TA-67 E5 3BAb2	B	Yes	TA-67	6700	51000	<1.3	0.8	2	5	150	620	0.48	2	NA	NA	2700	7200	13	6.2
FS2179	TA-67 E5 3Bt1b2	B	Yes	TA-67	15000	65000	<1.4	0.7	2	6	130	410	1.5	3	NA	NA	3300	5700	16	8.5
FS2180	TA-67 E5 4C1b3	C	No	TA-67	15000	30000	<1.4	0.7	2	9	77	150	1.5	4.4	NA	NA	3600	3100	36	6.1
FS2180D1	TA-67 E5 4C1b3	C	No	TA-67	NA	NA	NA	0.5	NA	NA	NA	NA	NA	NA	NA	NA	NA	NA	NA	NA
FS2180-AVE	Average of FS2180,FS2180D1	C	Yes	TA-67	15000	30000	<1.4	0.6	2	9	77	150	1.5	4.4	NA	NA	3600	3100	36	6.1
FS2181	TA-67 E5 4CBt1b3	C	Yes	TA-67	12000	27000	<1.4	0.7	1	9	70	150	1	4.2	NA	NA	2600	2500	16	5.2
FS2182	TA-67 E5 4CBt2b3	C	Yes	TA-67	11000	44000	<1.3	0.6	1	5	69	170	0.97	3.8	NA	NA	2700	3300	26	5.1
FS2183	TA-67 E5 A	A	Yes	TA-67	7100	28000	<1.4	1.1	2	0.9	150	580	0.7	2.2	NA	NA	1900	4800	9.4	6.4
FS2184	TA-67 E5 BA	B	No	TA-67	13000	23000	<1.4	0.6	3	10	200	620	1	2.4	NA	NA	2200	4200	9	10
FS2184D1	TA-67 E5 BA	B	No	TA-67	NA	NA	NA	0.7	NA	NA	NA	NA	NA	NA	NA	NA	NA	NA	NA	NA
FS2184-AVE	Average of FS2184,FS2184D1	B	Yes	TA-67	13000	23000	<1.4	0.75	3	10	200	620	1	2.4	NA	NA	2200	4200	9	10
FS2185	TA-67 E5 4C2b3	C	No	TA-67	15000	26000	<1.4	0.5	2	3	65	170	1.9	4.4	NA	NA	4100	3300	35	6.9
FS2185D1	TA-67 E5 4C2b3	C	No	TA-67	NA	NA	NA	NA	NA	NA	NA	NA	NA	NA	NA	NA	NA	NA	NA	NA
FS2185-AVE	Average of FS2185,FS2185D1	C	Yes	TA-67	15000	26000	<1.4	0.5	2	3	65	170	1.9	4.4	NA	NA	4100	3300	35	6.9
FS2186	TA-67 TW1 A1	A	Yes	TA-67	2400	27000	0.2	0.7	3	9	160	580	0.79	2.2	NA	NA	1900	4600	8	6.1
FS2187	TA-67 TW1 Bkb	B	Yes	TA-67	2500	52000	0.2	0.5	2	3	110	390	0.86	2.4	NA	NA	4700	6300	8	5
FS2188	TA-67 TW1 BW1	B	Yes	TA-67	3400	31000	0.2	0.7	3	9	190	630	1.1	2.4	NA	NA	1600	4600	14	7.4
FS2189	TA-67 W1 A3	A	No	TA-67	3200	21000	0.4	0.8	5	4	180	610	1	2.4	NA	NA	1800	3900	8	7.5
FS2189D1	TA-67 W1 A3	A	No	TA-67	NA	NA	NA	NA	NA	NA	NA	NA	NA	NA	NA	NA	NA	NA	NA	NA
FS2189-AVE	Average of FS2189,FS2189D1	A	Yes	TA-67	3200	21000	0.4	0.8	5	4	180	610	1	2.4	NA	NA	1800	3900	8	7.5
FS2190	TA-67 W1 BA	B	Yes	TA-67	9300	20000	0.2	0.7	3	8	160	580	0.96	2.5	NA	NA	1800	4700	8	7.7
FS2191	TA-67 W1 Bt/CR	B	Yes	TA-67	2500	30000	0.2	0.4	1	13	64	310	1.1	2.5	NA	NA	1400	2300	8	4.9
FS2192	TA-67 W1 Bt1	B	Yes	TA-67	3900	32000	0.4	0.8	4	20	190	640	0.98	2.3	NA	NA	1800	4400	11	9.6
FS2193	TA-67 W1 Bt2	B	Yes	TA-67	3600	26000	0.8	1	3	13	190	570	1.1	2.5	NA	NA	1800	4900	10	6.9
FS2194	TA-67 W1 E1Bb	B	Yes	TA-67	3300	25000	0.4	0.7	2	12	150	510	0.95	2	NA	NA	1900	3100	8	7.3
FS2196	TE1 TA-67-2 Bt2b1	B	Yes	TA-67	2300	36000	0.4	0.9	3	11	85	470	0.93	2.1	NA	NA	1500	2400	11	6
FS2198	TE1 TA-67-2 Bt3b2	B	Yes	TA-67	2000	22000	0.2	0.5	1	15	53	220	1	2.8	NA	NA	2500	1600	26	4.6
FS2197	TE1 TA-67-2 BtK1b2	B	Yes	TA-67	2000	47000	0.4	0.9	3	13	99	390	1	2.3	NA	NA	2900	3600	32	6
FS2198	TE1 TA-67-2 BtK2b2	B	Yes	TA-67	2900	25000	0.4	0.8	3	9	94	400	1.2	2.5	NA	NA	2100	2600	18	6
FS2199	TE1 TA-67-2 BtKb1	B	Yes	TA-67	2000	29000	0.4	0.9	3	8	86	450	0.82	2.2	NA	NA	1600	2100	13	5.4
FS2200	TE1 TA-67-2 CR	C	No	TA-67	900	41000	<0.2	0.4	0.5	4	21	160	0.45	2.8	NA	NA	630	2000	17	1.9
FS2200D1	TE1 TA-67-2 CR	C	No	TA-67	NA	NA	NA	0.3	NA	NA	NA	NA	NA	NA	NA	NA	NA	NA	NA	NA
FS2200-AVE	Average of FS2200,FS2200D1	C	Yes	TA-67	900	41000	<0.2	0.35	0.5	4	21	160	0.45	2.8	NA	NA	630	2000	17	1.9
FS2201	TE1 TA-67-2 E1Bt2b1	B	Yes	TA-67	2400	24000	1	1	4	14	110	610	0.93	2	NA	NA	2200	2600	8	7.9
FS2202	TE1 TA-67-2 E1Btb1	B	Yes	TA-67	2100	35000	0.4	0.9	3	5	120	570	0.57	1.6	NA	NA	2100	3700	10	6.2
FS2203	TE1 TA-67-2 Bt1b1	B	No	TA-67	3600	54000	0.4	1.4	4	9	110	500	1.2	2.3	NA	NA	2200	3800	13	9.3
FS2203D1	TE1 TA-67-2 Bt1b1	B	No	TA-67	3600	NA	0.5	NA	4	NA	110	NA	1.2	NA	NA	NA	2200	NA	NA	9.3
FS2203-AVE	Average of FS22083,FS2203D1	B	Yes	TA-67	3600	54000	0.45	1.4	4	9	110	500	1.2	2.3	NA	NA	2200	3800	13	9.3
FS2208	WC-1 (TA-16) Bt1b1c	B	Yes	TA-16	2500	60000	<0.5	0.9	3	3	90	440	0.89	2.4	NA	NA	2000	3600	9	6.1
FS2209	WC-1 (TA-16) Bt1b2	B	Yes	TA-16	2400	43000	<0.5	0.7	4	2	72	330	0.82	2.6	NA	NA	2000	2800	14	5.4
FS2210	WC-1 (TA-16) Bt2b2	B	Yes	TA-16	3300	26000	<0.5	1.1	5	11	100	340	1.3	3	NA	NA	3600	3500	21	7.4
FS2211	WC-1 (TA-16) Bt3b2	B	Yes	TA-16	2400	20000	<0.5	0.8	4	2	79	280	1.1	2.8	NA	NA	2900	2100	33	5.1
FS2212	WC-1 (TA-16) Bt4b2	B	Yes	TA-16	2600	32000	<0.5	0.7	3	2	76	280	0.98	2.7	NA	NA	2500	2400	43	5.4
FS2213	WC-1 (TA-16) Bt5b2	B	Yes	TA-16	1400	29000	<0.5	0.7	2	2	46	270	0.56	2.7	NA	NA	1400	2300	20	2.8
FS2214	WC-1 (TA-16) Bt2	B	Yes	TA-16	3700	25000	<0.5	0.9	5	9	270	590	1.2	2.6	NA	NA	1900	3200	46	7.4
FS2215	WC-2 (Ta-16) Bt1b1b	B	Yes	TA-16	2900	22000	<0.5	1.4	6	11	110	460	0.99	2.2	NA	NA	2400	2300	8	7.3
FS2216	WC-2 (Ta-16) Bt2b1b	B	Yes	TA-16	1800	28000	<0.5	0.9	4	8	72	410	0.62	2.2	NA	NA	1400	2100	9	5.3
FS2217	WC-2 (Ta-16) Bt2b1c	B	Yes	TA-16	2100	32000	<0.6	1.2	4	6	66	360	0.75	2.4	NA	NA	1500	2000	10	5.1
FS2218	WC-2 (Ta-16) Bt3b1c	B	Yes	TA-16	1700	41000	<0.5	1.3	3	7	55	340	0.63	2.5	NA	NA	1300	2200	9	4.4
FS2219	TA-67 W1 A2	A	No	TA-67	2600	35000	0.5	1.4	5	10	170	580	0.9	2.3	NA	NA	1900	5900	12	5.9
FS2219D1	TA-67 W1 A2	A	No	TA-67	NA	NA	NA	1.3	NA	NA	NA	NA	NA	NA	NA	NA	NA	NA	NA	NA
FS2219-AVE	Average of FS2219,FS2219D1	A	Yes	TA-67	2600	35000	0.5	1.35	5	10	170	580	0.9	2.3	NA	NA	1900	5900	12	5.9
FS2000F	ULAC-08 Fine fraction	A	No	ULAC	NA	66160	NA	0.458	NA	1.626	NA	516.7	NA	2.1	<1	NA	NA	6475	NA	NA
FS2001	TA-16 base colluvium-14	Other	No	TA-16	12000	64430	<5	0.461	5.1	4.375	150	478.6	0.93	2	<1	<0.4	2100	4691	16.3	10
FS2003	TA-49 altered B-05 (Bandelier Tuff)	Tuff	No	TA-49	21000	68990	<5	1.055	5.9	7.015	220	745.1	1.5	2	<1	<0.4	2200	3434	17.6	17
FS2003D1	TA-49 altered B-05 (Bandelier Tuff)	Tuff	No	TA-49	NA	NA	<0.2	NA	6.4	NA	NA	NA	NA	NA	NA	NA	NA	NA	NA	NA
FS2006	TA-16 WTT1 CO3 Zone	CaCO3	No	TA-16	31000	87950	<5	0.717	5.9	5.649	340	791.3	1.6	2.5	<1	<0.4	3800	9736	13.3	15
FS2007	TA-16 CO3 Zone	CaCO3	No	TA-16	29000	88020	<5	<0.253	4.8	3.726	220	477.1	1.3	2.4	<1	<0.4	7800	14370	16.8	13
FS2008	TA-16 WTT1 oxd. CVZP-10	Other	No	TA-16	16000	69380	<5	0.534	7.7	7.359	200	587	1.2	2.1	<1	<0.4	1900	3278	12.1	11
FS2009	TA-16 WTT1 reduced CVZP-01	Other	No	TA-16	14000	67790	<5	0.516	0.5	1.425	120	635	0.9	2.7	<1	<0.4	1900	2914	12.2	12
FS2009D1	LAB REP	Other	No	TA-16	14000	NA	<5	NA	NA	NA	110	NA	0.92	NA	NA	<0.4	1800	NA	NA	12
FS2014	ULAC BAb-05 Fine Fraction	B	No	ULAC	9500	60350	<5	<0.303	2.5	<3.234	110	296.9	0.79	1.8	<1	<0.4	6500	13870	NA	6.7

Sample ID	SAMPLE DESCRIPTION	Horizon	Included	Location	Chromium-TOTAL	Cobalt-3050	Cobalt-TOTAL	Copper-3050	Copper-TOTAL	Iron-3050	Iron-TOTAL	Lead-3050	Lead-TOTAL	Magnesium-3050	Magnesium-TOTAL	Manganese-3050	Manganese-TOTAL	Mercury-3050	Nickel-3050	Nickel-TOTAL	Potassium-3050
FS2163	TA-67 E1 Bw	B	No	TA-67	28	5.6	8.2	5.5	11	13000	24000	12	20	1900	4400	400	560	NA	9.1	14	1900
FS2163D1	TA-67 E1 Bw	B	No	TA-67	29	NA	6.4	NA	11	NA	23000	NA	25	NA	4400	NA	560	NA	NA	5	NA
FS2163-AVE	Average of FS2163,FS2163D1	B	Yes	TA-67	28.5	5.6	7.3	5.5	11	13000	23500	12	24	1900	4400	400	570	NA	9.1	9.5	1900
FS2164	TA-67 E3 2BAb2	B	Yes	TA-67	23	6.5	4.9	10	16	18000	19000	14	20	2900	6200	330	260	NA	13	17	2500
FS2165	TA-67 E3 2BC1b1	B	Yes	TA-67	27	4.8	8	7.3	11	13000	25000	13	20	2400	5700	280	440	NA	9.7	<2	2100
FS2166	TA-67 E3 2BC2b1	B	No	TA-67	28	5.8	6.6	6.9	11	14000	26000	14	24	2500	5400	280	450	NA	10	13	2100
FS2166D1	TA-67 E3 2BC2b1	B	No	TA-67	NA	NA	NA	NA	NA	NA	NA	NA	NA	NA	NA	NA	NA	NA	NA	NA	NA
FS2166-AVE	Average of FS2166,FS2166D1	B	Yes	TA-67	28	5.8	6.8	6.9	11	14000	26000	14	24	2500	5400	280	450	NA	10	13	2100
FS2167	TA-67 E3 2Bt1b1	B	No	TA-67	36	6.4	8.4	8.1	14	18000	33000	17	25	3500	6400	290	490	NA	5.4	23	2900
FS2167D1	TA-67 E3 2Bt1b1	B	No	TA-67	NA	6.9	NA	7.9	NA	16000	NA	16	NA	3300	NA	330	NA	NA	5.4	NA	2700
FS2167-AVE	Average of FS2167,FS2167D1	B	Yes	TA-67	36	6.65	8.4	8	14	17000	33000	16.5	25	3400	6400	310	490	NA	5.4	23	2800
FS2168	TA-67 E3 2Bt2b1	B	Yes	TA-67	31	5.2	8.1	6.5	11	14000	28000	17	12	2800	5800	270	490	NA	4.8	9	2200
FS2169	TA-67 E3 3Bt1b2	B	Yes	TA-67	29	5.1	10	5.7	13	11000	23000	7.9	18	2400	4900	270	490	NA	2.3	13	1800
FS2170	TA-67 E3 3Bt2b2	B	Yes	TA-67	25	5.9	8	6	12	12000	20000	8.2	22	2300	3400	290	430	NA	<2	11	1800
FS2171	TA-67 E3 3Bt3b2	B	Yes	TA-67	28	6.8	6.3	6.3	11	14000	25000	14	30	2500	4100	240	350	NA	7.6	4	1900
FS2172	TA-67 E3 A	A	Yes	TA-67	31	7.6	11	4.3	11	11000	23000	14	28	1800	3600	360	620	NA	2.3	<2	1500
FS2173	TA-67 E5 2BC15b1	B	Yes	TA-67	26	4.5	6	5.1	9.3	13000	25000	13	30	2600	5100	230	440	NA	2.4	41	2100
FS2174	TA-67 E5 2BC25b1	B	Yes	TA-67	28	5.2	5.5	5.3	9	12000	24000	12	29	2300	5000	260	480	NA	<2	8	2000
FS2175	TA-67 E5 2Bt1b1	B	Yes	TA-67	34	7.1	9.8	7.3	14	14000	27000	16	29	2600	4900	420	780	NA	4.8	<2	2200
FS2176	TA-67 E5 2Bt2b1	B	Yes	TA-67	34	8.5	7.4	7	14	14000	27000	14	29	2800	5100	450	550	NA	3.2	16	2100
FS2177	TA-67 E5 2Bt3b1	B	Yes	TA-67	30	4.7	6.6	5.9	12	12000	27000	10	27	2600	5300	260	530	NA	2.7	14	2100
FS2178	TA-67 E5 3BAb2	B	Yes	TA-67	21	8.4	9.2	4.3	10	8400	18000	13	26	1600	2600	420	630	NA	<2	4	1300
FS2179	TA-67 E5 3Btb2	B	Yes	TA-67	30	6.4	10	5.5	13	12000	24000	12	31	3200	6000	330	430	NA	4.8	14	2400
FS2180	TA-67 E5 4C1b3	C	No	TA-67	18	2.3	4.6	6.6	7.7	8200	15000	9	27	2600	3700	160	310	NA	<2	12	2100
FS2180D1	TA-67 E5 4C1b3	C	No	TA-67	NA	NA	NA	NA	NA	NA	NA	NA	NA	NA	NA	NA	NA	NA	NA	NA	NA
FS2180-AVE	Average of FS2180,FS2180D1	C	Yes	TA-67	18	2.3	4.6	6.6	7.7	8200	15000	9	27	2600	3700	160	310	NA	<2	12	2100
FS2181	TA-67 E5 4CBt1b3	C	Yes	TA-67	16	1.8	4.5	4.7	5.5	6800	14000	<4	27	2000	2800	88	290	NA	<2	8.5	1600
FS2182	TA-67 E5 4CBt2b3	C	Yes	TA-67	13	2.7	4.2	4.5	4.6	6700	14000	6.2	26	1800	2900	110	330	NA	<2	8.6	1600
FS2183	TA-67 E5 A	A	Yes	TA-67	27	5.5	12	4.3	8	8400	17000	12	20	1500	3500	390	450	NA	<2	10	1400
FS2184	TA-67 E5 BA	B	No	TA-67	28	7.5	13	5.5	8.8	13000	19000	14	23	2100	3600	420	480	NA	3.7	12	2000
FS2184D1	TA-67 E5 BA	B	No	TA-67	NA	NA	NA	NA	NA	NA	NA	NA	NA	NA	NA	NA	NA	NA	NA	NA	NA
FS2184-AVE	Average of FS2184,FS2184D1	B	Yes	TA-67	28	7.5	13	5.5	8.8	13000	19000	14	23	2100	3600	420	480	NA	3.7	12	2000
FS2185	TA-67 E5 4C2b3	C	No	TA-67	18	2.2	4.8	7.3	8.8	8500	16000	8.9	24	3000	3700	160	280	NA	4.9	13	2500
FS2185D1	TA-67 E5 4C2b3	C	No	TA-67	NA	NA	NA	NA	NA	NA	NA	NA	NA	NA	NA	NA	NA	NA	NA	NA	NA
FS2185-AVE	Average of FS2185,FS2185D1	C	Yes	TA-67	18	2.2	4.8	7.3	8.8	8500	16000	8.9	24	3000	3700	160	280	NA	4.9	13	2500
FS2186	TA-67 TW1 A1	A	Yes	TA-67	24	5.1	12	12	11	7900	17000	20	25	1400	3700	380	530	NA	5	9.7	1400
FS2187	TA-67 TW1 Btkb	B	Yes	TA-67	15	2.8	6.7	3	3	7800	19000	5	25	1700	3200	180	380	NA	5	7.3	1400
FS2188	TA-67 TW1 BW1	B	Yes	TA-67	28	6.9	13	5	9.8	11000	19000	10	23	1600	3500	450	520	NA	7	12	1900
FS2189	TA-67 W1 A3	A	No	TA-67	27	6.8	13	4.4	8.4	10000	18000	11	23	1700	3600	390	510	NA	7	11	1800
FS2189D1	TA-67 W1 A3	A	No	TA-67	NA	NA	NA	NA	NA	NA	NA	NA	NA	NA	NA	NA	NA	NA	NA	NA	NA
FS2189-AVE	Average of FS2189,FS2189D1	A	Yes	TA-67	27	6.8	13	4.4	8.4	10000	18000	11	23	1700	3600	390	510	NA	7	11	1800
FS2190	TA-67 W1 BA	B	Yes	TA-67	26	6.2	12	3.5	7.8	9900	18000	13	25	1500	3400	400	470	NA	4.9	11	1700
FS2191	TA-67 W1 Bt/CR	B	Yes	TA-67	12	2.1	5.4	3.2	3.1	8000	16000	7	25	1800	2200	260	370	NA	6	8.5	1400
FS2192	TA-67 W1 Bt1	B	Yes	TA-67	29	6.6	14	5.9	9.1	13000	20000	17	24	2200	3800	360	480	NA	8	11	2000
FS2193	TA-67 W1 Bt2	B	Yes	TA-67	27	5.5	13	5	8.6	10000	18000	10	24	1900	3800	360	440	NA	7	12	1800
FS2194	TA-67 W1 E1Bb	B	Yes	TA-67	22	4.2	11	4.4	6.7	10000	16000	8	27	1800	2600	260	410	NA	6	9.7	1600
FS2195	TE1 TA-67-2 Bt2b1	B	Yes	TA-67	23	4.3	9.9	6.3	9.3	9200	18000	11	22	1500	2900	240	380	NA	4	11	1400
FS2196	TE1 TA-67-2 Bt3b2	B	Yes	TA-67	14	1.6	5	3.9	3.4	6800	14000	<4	19	1300	1900	150	330	NA	5	7.7	1100
FS2197	TE1 TA-67-2 BtK1b2	B	Yes	TA-67	20	4.5	8.5	6.5	8.4	9000	18000	9	25	1600	3200	330	400	NA	7	9.4	1500
FS2198	TE1 TA-67-2 BtK2b2	B	Yes	TA-67	19	3.4	7.7	5.4	7.3	10000	16000	10	23	2000	2600	300	400	NA	8	12	1600
FS2199	TE1 TA-67-2 BtKb1	B	Yes	TA-67	19	4.6	8.7	6.1	9.2	9000	16000	5	24	1400	2300	300	410	NA	6	9.6	1300
FS2200	TE1 TA-67-2 CR	C	No	TA-67	4.9	1	2.1	1.8	1	4700	10000	<4	21	480	930	120	320	NA	<2	3.7	440
FS2200D1	TE1 TA-67-2 CR	C	No	TA-67	NA	NA	NA	NA	NA	NA	NA	NA	NA	NA	NA	NA	NA	NA	NA	NA	NA
FS2200-AVE	Average of FS2200,FS2200D1	C	Yes	TA-67	4.9	1	2.1	1.8	1	4700	10000	<4	21	480	930	120	320	NA	<2	3.7	440
FS2201	TE1 TA-67-2 E1Bt2b1	B	Yes	TA-67	26	6.8	11	6.4	9.9	11000	17000	15	20	1800	2800	330	320	NA	6	10	1700
FS2202	TE1 TA-67-2 E1Btb1	B	Yes	TA-67	20	5.6	13	4.8	7.7	9500	15000	10	22	1400	2300	370	620	NA	5	9.8	1200
FS2203	TE1 TA-67-2 Bt1b1	B	No	TA-67	29	5.5	11	7.6	11	13000	22000	10	27	2300	4100	290	450	NA	8	14	2100
FS2203D1	TE1 TA-67-2 Bt1b1	B	No	TA-67	NA	5.6	NA	7.5	NA	13000	NA	12	NA	2200	NA	290	NA	NA	7	NA	2100
FS2203-AVE	Average of FS2203,FS2203D1	B	Yes	TA-67	29	5.55	11	7.55	11	13000	22000	11	27	2250	4100	290	450	NA	7.5	14	2100
FS2208	WC-1 (TA-16) Bt1b1c	B	Yes	TA-16	21	4.2	9.2	7.4	8.4	11000	20000	11	18	1800	3800	280	410	NA	6	12	1500
FS2209	WC-1 (TA-16) Bt1b2	B	Yes	TA-16	17	4.4	7.8	4.4	4.7	11000	19000	12	19	1500	2400	240	350	NA	5	8.8	1200
FS2210	WC-1 (TA-16) Bt2b2	B	Yes	TA-16	30	4.8	11	5.8	8.3	12000	23000	12	30	2400	3800	230	310	NA	8	14	1600
FS2211	WC-1 (TA-16) Bt3b2	B	Yes	TA-16	20	3.7	6.8	4.8	4.9	9000	18000	12	21	1900	2600	250	330	NA	7	38	1200
FS2212	WC-1 (TA-16) Bt4b2	B	Yes	TA-16	16	3	5.8	4.8	4.6	10000	18000	8	20	1900	2600	230	340	NA	8	12	1200
FS2213	WC-1 (TA-16) Bt5b2	B	Yes	TA-16	11	1.7	4.8	3.3	3.1	7000	17000	7	20	1000	1900	160	390	NA	4	6.7	680
FS2214	WC-1 (TA-16) Bt2	B	Yes	TA-16	27	6	14	6.5	9.6	12000	20000	15	29	2400	3800	520	750	NA	6	14	2100
FS2215	WC-2 (Ta-16) Bt1b1b	B	Yes	TA-16	27	6.9	13	9.2	11	12000	19000	10	24	2200	3600	390	440	NA	9	15	1900
FS2216	WC-2 (Ta-16) Bt2b1b	B	Yes	TA-16	17	4.2	7.5	5.6	6.4	9500	15000	9	18	1400	2100	260	340	NA	5	7.9	1200
FS2217	WC-2 (Ta-16) Bt2b1c	B	Yes	TA-16	16	3.9	7.7	5.8	6.3	9400	17000	10	20	1300	2000	220	320	NA	4	9.1	1200
FS2218	WC-2 (Ta-16) Bt3b1c	B	Yes	TA-16	14	3.7	6.8	4	4.9	8700	16000	7	24	1000	1900	160	270	NA	4	6.7	940
FS2219	TA-67 W1 A2	A	No	TA-67	25	5.7	13	6.7	9.6	8300	18000	14	28	1500	3700	400	540	NA	5	13	1600
FS2219D1	TA-67 W1 A2	A	No	TA-67	NA	NA	NA	NA	NA	NA	NA	NA	NA	NA	NA	NA	NA	NA	NA	NA	NA
FS2219-AVE	Average of FS2219,FS2219D1	A	Yes	TA-67	25	5.7	13	6.7	9.6	8300	18000	14	28	1500	3700	400	540	NA	5	13	1600
FS2000F	ULAC-06 Fine fraction	A	No	ULAC	22.54	NA	4.063	NA	<349	NA	16030	NA	26.5	NA	<2667	NA	1552	NA	NA	NA	NA
FS2001	TA-16 base colluvium-14	Other	No	TA-16	45.25	15	8.579	8.3	<204.3	14000	22280	13	25	2700	4949	400	507.3	<0.1	10	NA	2400
FS2003	TA-49 altered B-05 (Bandelier Tuff)	Tuff	No	TA-49	57.41	11	9.822	11	<215.3	19000	27230	15	27	3600	5543	460	647.7	<0.1	14	NA	3600
FS2003D1	TA-49 altered B-05 (Bandelier Tuff)	Tuff	No	TA-49	NA	NA	NA	NA	NA	NA	NA	NA	NA	NA	NA	NA	NA	NA	NA	NA	NA
FS2006	TA-16 WTT1 CO3 Zone	CaCO3	No	TA-16	47.94	11	9.384	6.4	<239.1	19000	28650	14	24.7	4000	7685	300	555.7	<0.1	12	NA	3300
FS2007	TA-16 CO3 Zone	CaCO3	No	TA-16	34.55	16	8.591	4.7	<262.5	16000	26470	10	28	3400	5634	220	486.9	<0.1	12	NA	3000
FS2008	TA-16 WTT1 oxd. CVZP-10	Other	No	TA-16	29.24	21	10.28	7.4	<387.2	16000	23830	13	22	2400	<3767	1100	1329	<0.1	12	NA	2700
FS2009	TA-16 WTT1 reduced CVZP-01	Other	No	TA-16	47.73	8.7	4.004	9.4	<210.3	10000	15900	13	32	2700	4434	110	185.7	<0.1	6.5	NA	2800
FS2009D1	LAB REP	Other	No	TA-16	NA	8.3	NA	8.8	NA	9600	NA	10	NA	2700	NA	100	NA	NA	6.5	NA	2800
FS2014	ULAC BAb-05 Fine Fraction	B	No	ULAC	14.72	4.1	4.119	6.1	<321.9	11000	14070	9	22	1800	<3027	660	772.8	<0.1	12	NA	1900

BG Soil - Data list for EPA

Sample ID	SAMPLE DESCRIPTION	Horizon	Included	Location	Potassium-TOTAL	Selenium-3050	Sodium-3050	Sodium-TOTAL	Sulfate-3050	Tantalum-3050	Tantalum-TOTAL	Thallium-3050	Thallium-TOTAL	Thorium-3050	Thorium-TOTAL	Uranium-3050	Uranium-TOTAL	Vanadium-3050	Vanadium-TOTAL	Zinc-3050
FS2163	TA-67 E1 Bw	B	No	TA-67	22000	NA	93	11000	14	<0.5	2.5	0.2	0.8	9	16.4	1.4	4.2	24	54	27
FS2163D1	TA-67 E1 Bw	B	No	TA-67	21000	NA	NA	12000	NA	NA	2.4	NA	0.7	NA	16.2	NA	4.5	NA	56	NA
FS2163-AVE	Average of FS2163,FS2163D1	B	Yes	TA-67	21500	NA	93	11500	14	<0.5	2.45	0.2	0.75	9	16.3	1.4	4.35	24	55	27
FS2164	TA-67 E3 2BAb2	B	Yes	TA-67	11000	NA	300	9900	19	<0.5	2.8	0.4	0.8	12.8	19.4	1.9	4.6	32	68	36
FS2165	TA-67 E3 2BC1b1	B	Yes	TA-67	21000	NA	490	13000	73	<0.5	2.6	0.2	0.8	10	18.2	0.7	3.8	24	56	34
FS2166	TA-67 E3 2BC2b1	B	No	TA-67	22000	NA	550	14000	153	<0.5	2.7	0.2	0.7	10	19.2	0.9	3.9	25	52	30
FS2166D1	TA-67 E3 2BC2b1	B	No	TA-67	NA	NA	NA	NA	NA	<0.5	NA	0.2	NA	10.2	NA	0.7	NA	NA	NA	NA
FS2166-AVE	Average of FS2166,FS2166D1	B	Yes	TA-67	22000	NA	550	14000	153	<0.5	2.7	0.2	0.7	10.1	19.2	0.8	3.9	25	52	30
FS2167	TA-67 E3 2Bt1b1	B	No	TA-67	22000	NA	480	10000	61	<0.9	2.7	0.9	0.8	20.5	19.3	2.6	4.1	27	63	37
FS2167D1	TA-67 E3 2Bt1b1	B	No	TA-67	NA	NA	470	NA	NA	<0.9	NA	0.6	NA	18.4	NA	2.2	NA	25	NA	34
FS2167-AVE	Average of FS2167,FS2167D1	B	Yes	TA-67	22000	NA	475	10000	61	<0.9	2.7	0.75	0.8	19.45	19.3	2.4	4.1	26	63	35.5
FS2168	TA-67 E3 2Bt2b1	B	Yes	TA-67	22000	NA	500	13000	71	<0.9	2.6	0.5	0.7	18.4	19.8	1.5	4	23	58	32
FS2169	TA-67 E3 3Bt1b2	B	Yes	TA-67	23000	NA	540	15000	129	<0.9	2.3	0.5	0.7	15.2	17.2	1.1	3.7	20	56	25
FS2170	TA-67 E3 3Bt2b2	B	Yes	TA-67	25000	NA	460	14000	144	<0.9	1.6	0.4	0.7	12.2	13.9	1.2	3.2	22	51	30
FS2171	TA-67 E3 3Bt3b2	B	Yes	TA-67	29000	NA	650	15000	184	<0.9	1.9	0.2	0.7	11	13.5	1.3	3.5	24	54	38
FS2172	TA-67 E3 A	A	Yes	TA-67	24000	NA	170	14000	13	<0.9	2	0.4	0.7	12.5	14.8	1.9	3.9	23	62	23
FS2173	TA-67 E5 2BC15b1	B	Yes	TA-67	23000	NA	270	15000	66	<0.9	3.1	0.4	0.7	13.5	20	0.9	4.1	25	53	26
FS2174	TA-67 E5 2BC25b1	B	Yes	TA-67	25000	NA	400	15000	52	<0.9	2.7	0.4	0.6	13.1	19.3	1	4.2	20	51	25
FS2175	TA-67 E5 2Bt1b1	B	Yes	TA-67	22000	NA	180	12000	31	<0.9	2.1	0.4	0.7	15.5	16	2	3.7	26	67	30
FS2176	TA-67 E5 2Bt2b1	B	Yes	TA-67	23000	NA	160	10000	61	<0.9	2.1	0.6	0.7	21.6	16	1.9	3.7	27	68	31
FS2177	TA-67 E5 2Bt3b1	B	Yes	TA-67	23000	NA	220	12000	68	<0.8	2.4	0.4	0.7	17.5	17.6	1.1	3.2	23	60	26
FS2178	TA-67 E5 3BAb2	B	Yes	TA-67	30000	NA	240	15000	50	<0.9	1.5	0.5	0.7	10.1	12.2	0.7	2.7	16	46	20
FS2179	TA-67 E5 3Bt1b2	B	Yes	TA-67	25000	NA	430	14000	46	<0.9	2.2	0.6	0.8	14.1	13	1.1	2.7	16	48	35
FS2180	TA-67 E5 4C1b3	C	No	TA-67	28000	NA	620	17000	57	<0.9	4.1	0.4	0.9	10.5	18	0.9	4.3	9.3	31	32
FS2180D1	TA-67 E5 4C1b3	C	No	TA-67	NA	NA	NA	NA	NA	NA	4	NA	0.9	NA	18.3	NA	4.3	NA	NA	NA
FS2180-AVE	Average of FS2180,FS2180D1	C	Yes	TA-67	28000	NA	620	17000	57	<0.9	4.05	0.4	0.9	10.5	18.15	0.9	4.3	9.3	31	32
FS2181	TA-67 E5 4CBt1b3	C	Yes	TA-67	29000	NA	390	20000	43	<0.9	4.3	<0.2	0.9	8.4	16.9	0.7	4.9	8.7	29	19
FS2182	TA-67 E5 4CBt2b3	C	Yes	TA-67	30000	NA	490	18000	47	<0.9	3.6	0.2	0.9	7.1	15.4	0.7	4.7	6.8	22	21
FS2183	TA-67 E5 A	A	Yes	TA-67	21000	NA	71	14000	17	<0.9	2.5	0.2	0.8	12.8	13.5	3.8	5.1	16	53	20
FS2184	TA-67 E5 BA	B	No	TA-67	20000	NA	110	13000	28	<0.9	2.8	0.2	0.9	11.1	21.6	1.6	3	24	60	27
FS2184D1	TA-67 E5 BA	B	No	TA-67	NA	NA	NA	NA	NA	NA	1.6	NA	0.9	NA	14.5	NA	3.7	NA	NA	NA
FS2184-AVE	Average of FS2184,FS2184D1	B	Yes	TA-67	20000	NA	110	13000	28	<0.9	2.2	0.2	0.9	11.1	18.05	1.6	3.35	24	60	27
FS2185	TA-67 E5 4C2b3	C	No	TA-67	26000	NA	740	17000	46	<0.9	3.9	0.4	1	10.8	19	1	4.5	9.7	33	30
FS2185D1	TA-67 E5 4C2b3	C	No	TA-67	NA	NA	NA	NA	NA	NA	3.9	NA	NA	NA	NA	NA	NA	NA	NA	NA
FS2185-AVE	Average of FS2185,FS2185D1	C	Yes	TA-67	26000	NA	740	17000	46	<0.9	3.9	0.4	1	10.8	19	1	4.5	9.7	33	30
FS2186	TA-67 TW1 A1	A	Yes	TA-67	20000	NA	69	13000	25	<0.2	2.4	0.4	0.7	10.6	13.7	9.9 (X)	12.6 (X)	15	50	24
FS2187	TA-67 TW1 Btkb	B	Yes	TA-67	33000	NA	140	24000	30	<0.2	3.3	0.2	1.1	7.9	11	0.7	2.3	9.8	30	28
FS2188	TA-67 TW1 BW1	B	Yes	TA-67	21000	NA	60	13000	12	<0.2	2.5	0.4	0.8	13.6	14.5	1.5	3.2	21	60	22
FS2189	TA-67 W1 A3	A	No	TA-67	20000	NA	64	13000	16	<0.2	2.9	0.4	0.8	12.2	14.9	1.9	4	NA	55	21
FS2189D1	TA-67 W1 A3	A	No	TA-67	NA	NA	NA	NA	NA	NA	NA	NA	NA	NA	NA	NA	NA	19	NA	NA
FS2189-AVE	Average of FS2189,FS2189D1	A	Yes	TA-67	20000	NA	64	13000	16	<0.2	2.9	0.4	0.8	12.2	14.9	1.9	4	19	55	21
FS2190	TA-67 W1 BA	B	Yes	TA-67	20000	NA	78	13000	12	<0.2	3.1	0.2	0.8	11.7	15.6	1.4	3.6	19	54	21
FS2191	TA-67 W1 Bt/CR	B	Yes	TA-67	33000	NA	140	26000	16	<0.2	3.5	<0.2	1	8.4	14	0.6	2.9	9.8	25	31
FS2192	TA-67 W1 Bt1	B	Yes	TA-67	20000	NA	96	12000	14	<0.2	2.6	0.4	0.8	14.3	15.5	1.4	3.2	25	63	28
FS2193	TA-67 W1 Bt2	B	Yes	TA-67	20000	NA	95	14000	17	<0.2	3.1	0.4	0.9	14.5	17	1.1	3.5	19	56	20
FS2194	TA-67 W1 E1Bb	B	Yes	TA-67	23000	NA	100	16000	20	<0.2	2.7	0.2	1	9.8	12.7	0.9	2.8	17	43	25
FS2195	TE1 TA-67-2 Bt2b1	B	Yes	TA-67	27000	NA	230	15000	45	<0.2	2.3	0.2	0.7	9.7	12.1	0.9	2.7	16	47	23
FS2196	TE1 TA-67-2 Bt3b2	B	Yes	TA-67	30000	NA	350	22000	33	<0.2	3.6	<0.2	0.5	8	13	0.9	3.1	8.7	26	20
FS2197	TE1 TA-67-2 BtK1b2	B	Yes	TA-67	28000	NA	350	18000	35	<0.2	3	0.2	0.7	9	12.1	0.7	2.8	14	40	24
FS2198	TE1 TA-67-2 BtK2b2	B	Yes	TA-67	29000	NA	390	20000	40	<0.2	2.9	0.2	0.9	9.4	11.7	1	3.3	13	37	29
FS2199	TE1 TA-67-2 BtKb1	B	Yes	TA-67	30000	NA	250	19000	44	<0.2	2.6	0.2	0.8	8.9	11	0.7	3.1	14	40	24
FS2200	TE1 TA-67-2 CR	C	No	TA-67	35000	NA	150	28000	12	<0.2	3.9	<0.2	0.4	7	10.1	0.6	3.3	4	9	14
FS2200D1	TE1 TA-67-2 CR	C	No	TA-67	NA	NA	NA	NA	NA	NA	4.3	NA	0.3	NA	10.5	NA	3.2	NA	NA	NA
FS2200-AVE	Average of FS2200,FS2200D1	C	Yes	TA-67	35000	NA	150	28000	12	<0.2	4.1	<0.2	0.35	7	10.3	0.6	3.25	4	9	14
FS2201	TE1 TA-67-2 E1Bt2b1	B	Yes	TA-67	24000	NA	190	14000	24	<0.2	2	0.4	0.9	10.6	12.4	0.9	3.4	20	52	26
FS2202	TE1 TA-67-2 E1Btb1	B	Yes	TA-67	24000	NA	150	15000	16	<0.2	2	0.4	1	10.8	11.5	0.9	3.2	16	42	21
FS2203	TE1 TA-67-2 Bt1b1	B	No	TA-67	25000	NA	240	14000	25	<0.2	2.4	0.4	0.9	11.2	11.7	1	3.2	22	57	33
FS2203D1	TE1 TA-67-2 Bt1b1	B	No	TA-67	NA	NA	240	NA	NA	<0.2	NA	0.4	NA	10	NA	0.9	NA	22	NA	33
FS2203-AVE	Average of FS22083,FS2203D1	B	Yes	TA-67	25000	NA	240	14000	25	<0.2	2.4	0.4	0.9	10.6	11.7	0.95	3.2	22	57	33
FS2208	WC-1 (TA-16) Bt1b1c	B	Yes	TA-16	29000	NA	160	19000	17	<0.2	2.6	<0.2	0.8	6.3	12.9	0.9	3.9	16	46	31
FS2209	WC-1 (TA-16) Bt1b2	B	Yes	TA-16	30000	NA	210	22000	25	<0.2	3.3	<0.2	0.7	7.1	15	0.6	3.7	14	35	35
FS2210	WC-1 (TA-16) Bt2b2	B	Yes	TA-16	23000	NA	300	15000	37	<0.2	2.9	<0.2	1	7.7	17.7	0.7	4	18	57	34
FS2211	WC-1 (TA-16) Bt3b2	B	Yes	TA-16	28000	NA	270	21000	30	<0.2	3.7	<0.2	0.7	6.9	16	0.6	3.6	12	38	30
FS2212	WC-1 (TA-16) Bt4b2	B	Yes	TA-16	30000	NA	260	22000	21	<0.2	3.6	<0.2	0.7	6.3	15	0.6	3.3	12	32	34
FS2213	WC-1 (TA-16) Bt5b2	B	Yes	TA-16	34000	NA	190	26000	24	<0.2	4	0.2	0.6	6	14.9	0.5	2.8	7.4	24	28
FS2214	WC-1 (TA-16) Bt2	B	Yes	TA-16	24000	NA	400	15000	14	<0.2	3.2	0.2	1.3	8.2	17.8	1.1	4.7	23	58	29
FS2215	WC-2 (Ta-16) Bt1b1b	B	Yes	TA-16	23000	NA	150	13000	13	<0.2	2.7	<0.2	0.8	7.3	10.9	1	2.8	21	57	32
FS2216	WC-2 (Ta-16) Bt2b1b	B	Yes	TA-16	30000	NA	110	21000	16	<0.2	3.4	<0.2	0.6	6.3	11	0.7	3	15	37	29
FS2217	WC-2 (Ta-16) Bt2b1c	B	Yes	TA-16	30000	NA	150	21000	20	<0.2	3.6	<0.2	0.7	6.7	11.3	0.9	3.2	15	34	29
FS2218	WC-2 (Ta-16) Bt3b1c	B	Yes	TA-16	32000	NA	150	22000	16	<0.2	4.2	<0.2	0.6	6.2	10	0.7	2.9	12	31	28
FS2219	TA-67 W1 A2	A	No	TA-67	20000	NA	71	13000	20	<0.2	3.4	0.2	0.5	8.2	12.4	4.6	6	17	52	21
FS2219D1	TA-67 W1 A2	A	No	TA-67	NA	NA	NA	NA	NA	NA	4	NA	0.7	NA	13.4	NA	6.6	NA	NA	NA
FS2219-AVE	Average of FS2219,FS2219D1	A	Yes	TA-67	20000	NA	71	13000	20	<0.2	3.7	0.2	0.75	8.2	12.9	4.6 (X)	6.3 (X)	17	52	21
FS2000F	ULAC-08 Fine fraction	A	No	ULAC	33890	NA	NA	25130	NA	NA	2.338	NA	NA	NA	13.3	NA	3.264	NA	20.61	NA
FS2001	TA-16 base colluvium-14	Other	No	TA-16	25280	<0.3	350	14770	32	<0.2	1.497	0.2	NA	8	15.08	0.8	3.327	26	59.4	48
FS2003	TA-49 altered B-05 (Bandelier Tuff)	Tuff	No	TA-49	23240	0.36	520	14600	52	<0.2	1.59	0.4	NA	8	13.68	1.6	3.916	36	60.5	48
FS2003D1	TA-49 altered B-05 (Bandelier Tuff)	Tuff	No	TA-49	NA	0.34	NA	NA	NA	<0.2	NA	0.4	NA	8	NA	1.6	NA	NA	NA	NA
FS2006	TA-16 WTT1 CO3 Zone	CaCO3	No	TA-16	22400	0.9	470	16440	79	<0.2	3.033	0.2	NA	9	19.48	1.4	3.923	34	60.24	42
FS2007	TA-16 CO3 Zone	CaCO3	No	TA-16	23140	0.4	990	19020	117	<0.2	2.867	<0.2	NA	6	22.21	1.3	4.358	31	56.57	36
FS2008	TA-16 WTT1 oxd CVZP-10	Other	No	TA-16	26430	<0.3	410	19310	23	<0.2	2.237	0.5	NA	9	16.23	0.9	3.448	33	51.85	45
FS2009	TA-16 WTT1 reduced CVZP-01	Other	No	TA-16	24040	<0.3	220	18180	16	<0.2	1.858	<0.2	NA	0.6	14.12	0.3	3.21	17	41.55	39
FS2009D1	LAB REP	Other	No	TA-16	NA	NA	220	NA	NA	NA	NA	NA	NA	NA	NA	NA	NA	17	NA	38
FS2014	ULAC BAb-05 Fine Fraction	B	No	ULAC	29610	<0.3	420	21320	NA	<0.2	2.26	<0.2	NA	4	13.17	0.8	2.944	14	25.17	60

BG Soil - Data list for EPA

Sample ID	SAMPLE DESCRIPTION	Horizon	Included	Location	Zinc-TOTAL
FS2163	TA-67 E1 Bw	B	No	TA-67	58
FS2163D1	TA-67 E1 Bw	B	No	TA-67	54
FS2163-AVE	Average of FS2163,FS2163D1	B	Yes	TA-67	56
FS2164	TA-67 E3 2BAb2	B	Yes	TA-67	40
FS2165	TA-67 E3 2BC1b1	B	Yes	TA-67	61
FS2166	TA-67 E3 2BC2b1	B	No	TA-67	60
FS2166D1	TA-67 E3 2BC2b1	B	No	TA-67	NA
FS2166-AVE	Average of FS2166,FS2166D1	B	Yes	TA-67	60
FS2167	TA-67 E3 2Bt1b1	B	No	TA-67	76
FS2167D1	TA-67 E3 2Bt1b1	B	No	TA-67	NA
FS2167-AVE	Average of FS2167,FS2167D1	B	Yes	TA-67	76
FS2168	TA-67 E3 2Bt2b1	B	Yes	TA-67	65
FS2169	TA-67 E3 3Bt1b2	B	Yes	TA-67	59
FS2170	TA-67 E3 3Bt2b2	B	Yes	TA-67	57
FS2171	TA-67 E3 3Bt3b2	B	Yes	TA-67	65
FS2172	TA-67 E3 A	A	Yes	TA-67	50
FS2173	TA-67 E5 2BC15b1	B	Yes	TA-67	57
FS2174	TA-67 E5 2BC25b1	B	Yes	TA-67	60
FS2175	TA-67 E5 2Bt1b1	B	Yes	TA-67	62
FS2176	TA-67 E5 2Bt2b1	B	Yes	TA-67	64
FS2177	TA-67 E5 2Bt3b1	B	Yes	TA-67	62
FS2178	TA-67 E5 3BAb2	B	Yes	TA-67	50
FS2179	TA-67 E5 3Btb2	B	Yes	TA-67	72
FS2180	TA-67 E5 4C1b3	C	No	TA-67	76
FS2180D1	TA-67 E5 4C1b3	C	No	TA-67	NA
FS2180-AVE	Average of FS2180,FS2180D1	C	Yes	TA-67	76
FS2181	TA-67 E5 4CBt1b3	C	Yes	TA-67	70
FS2182	TA-67 E5 4CBt2b3	C	Yes	TA-67	66
FS2183	TA-67 E5 A	A	Yes	TA-67	44
FS2184	TA-67 E5 BA	B	No	TA-67	47
FS2184D1	TA-67 E5 BA	B	No	TA-67	NA
FS2184-AVE	Average of FS2184,FS2184D1	B	Yes	TA-67	47
FS2185	TA-67 E5 4C2b3	C	No	TA-67	76
FS2185D1	TA-67 E5 4C2b3	C	No	TA-67	NA
FS2185-AVE	Average of FS2185,FS2185D1	C	Yes	TA-67	76
FS2186	TA-67 TW1 A1	A	Yes	TA-67	50
FS2187	TA-67 TW1 Btkb	B	Yes	TA-67	70
FS2188	TA-67 TW1 BW1	B	Yes	TA-67	46
FS2189	TA-67 W1 A3	A	No	TA-67	46
FS2189D1	TA-67 W1 A3	A	No	TA-67	NA
FS2189-AVE	Average of FS2189,FS2189D1	A	Yes	TA-67	46
FS2190	TA-67 W1 BA	B	Yes	TA-67	47
FS2191	TA-67 W1 Bt/CR	B	Yes	TA-67	67
FS2192	TA-67 W1 Bt1	B	Yes	TA-67	48
FS2193	TA-67 W1 Bt2	B	Yes	TA-67	48
FS2194	TA-67 W1 E1Bb	B	Yes	TA-67	48
FS2195	TE1 TA-67-2 Bt2b1	B	Yes	TA-67	57
FS2196	TE1 TA-67-2 Bt3b2	B	Yes	TA-67	61
FS2197	TE1 TA-67-2 BtK1b2	B	Yes	TA-67	62
FS2198	TE1 TA-67-2 BtK2b2	B	Yes	TA-67	64
FS2199	TE1 TA-67-2 BtKb1	B	Yes	TA-67	56
FS2200	TE1 TA-67-2 CR	C	No	TA-67	44
FS2200D1	TE1 TA-67-2 CR	C	No	TA-67	NA
FS2200-AVE	Average of FS2200,FS2200D1	C	Yes	TA-67	44
FS2201	TE1 TA-67-2 E1Bt2b1	B	Yes	TA-67	56
FS2202	TE1 TA-67-2 E1Btb1	B	Yes	TA-67	43
FS2203	TE1 TA-67-2 Bt1b1	B	No	TA-67	67
FS2203D1	TE1 TA-67-2 Bt1b1	B	No	TA-67	NA
FS2203-AVE	Average of FS22083,FS2203D1	B	Yes	TA-67	67
FS2208	WC-1 (TA-16) Bt1b1c	B	Yes	TA-16	63
FS2209	WC-1 (TA-16) Bt1b2	B	Yes	TA-16	68
FS2210	WC-1 (TA-16) Bt2b2	B	Yes	TA-16	75
FS2211	WC-1 (TA-16) Bt3b2	B	Yes	TA-16	76
FS2212	WC-1 (TA-16) Bt4b2	B	Yes	TA-16	73
FS2213	WC-1 (TA-16) Bt5b2	B	Yes	TA-16	79
FS2214	WC-1 (TA-16) Bt2	B	Yes	TA-16	63
FS2215	WC-2 (Ta-16) Bt1b1b	B	Yes	TA-16	59
FS2216	WC-2 (Ta-16) Bt2b1b	B	Yes	TA-16	59
FS2217	WC-2 (Ta-16) Bt2b1c	B	Yes	TA-16	64
FS2218	WC-2 (Ta-16) Bt3b1c	B	Yes	TA-16	61
FS2219	TA-67 W1 A2	A	No	TA-67	48
FS2219D1	TA-67 W1 A2	A	No	TA-67	NA
FS2219-AVE	Average of FS2219,FS2219D1	A	Yes	TA-67	48
FS2000F	ULAC-08 Fine fraction	A	No	ULAC	64.74
FS2001	TA-16 base colluvium-14	Other	No	TA-16	55.22
FS2003	TA-49 altered B-05 (Bandelier Tuff)	Tuff	No	TA-49	<19.2
FS2003D1	TA-49 altered B-05 (Bandelier Tuff)	Tuff	No	TA-49	NA
FS2006	TA-16 WTT1 CO3 Zone	CaCO3	No	TA-16	<20.21
FS2007	TA-16 CO3 Zone	CaCO3	No	TA-16	53.35
FS2008	TA-16 WTT1 oxd. CVZP-10	Other	No	TA-16	<28.15
FS2009	TA-16 WTT1 reduced CVZP-01	Other	No	TA-16	<20.36
FS2009D1	LAB REP	Other	No	TA-16	NA
FS2014	ULAC BAb-05 Fine Fraction	B	No	ULAC	64.31

BG Soil - Data list for EPA

Sample ID	SAMPLE DESCRIPTION	Horizon	Included	Location	Aluminium-3050	Aluminium-TOTAL	Antimony-3050	Antimony-TOTAL	Arsenic-3050	Arsenic-TOTAL	Barium-3050	Barium-TOTAL	Beryllium-3050	Beryllium-TOTAL	Cadmium-TOTAL	Cadmium-3050	Calcium-3050	Calcium-TOTAL	Chlorine-	Chromium-3050
FS2015	ULAC Bwb-06 Fine Fraction	B	No	ULAC	5900	66310	<5	<0.379	1.6	2.126	40	206.3	0.64	2.3	<1	<0.4	1500	3388	17.2	4
FS2016	ULAC C-07 Fine Fraction	C	No	ULAC	5100	67540	<5	<0.267	1.5	2.029	34	288.3	0.52	2.1	<1	<0.4	1300	1911	14.1	3.7
FS2017	ULAC A2-02 Fine Fraction	A	No	ULAC	8600	59970	<5	<0.266	2.4	<2.944	180	343.2	0.8	2.3	<1	<0.4	10000	18870	16.1	6
FS2018	ULAC A1-01 Fine Fraction	A	No	ULAC	8400	59710	<5	0.426	2.5	3.783	220	493	0.67	2.4	<1	<0.4	9900	13850	39.4	6.9
FS2018D1	ULAC A1-01 Fine Fraction	A	No	ULAC	NA	NA	<0.2	NA	2.5	NA	NA	NA	NA	NA	NA	NA	NA	NA	NA	NA
FS2019	ULAC BW-04 Fine Fraction	B	No	ULAC	5800	70850	<5	0.34	1.2	<2.579	57	416.9	0.55	1.9	<1	<0.4	2100	5836	16.7	3.7
FS2019D1	LAB REP	B	No	ULAC	7600	NA	<5	NA	NA	NA	61	NA	0.53	NA	NA	<0.4	2200	NA	NA	5
FS2020	ULAC BA-03 Fine Fraction	B	No	ULAC	4100	66940	<5	<0.23	1	<2.582	56	308.3	0.41	1.8	1.6	<0.4	2300	6229	15.9	3
FS2024	ULAC BA-03 Fine Fraction, FS-2020F Duplicate	B	No	ULAC	NA	67570	NA	<0.38	NA	<4.286	NA	371.4	NA	1.8	<1	NA	NA	7145	NA	NA
FS2025	TA-16 WTT1 CO3 Zone, FS-2006 Duplicate	CaCO3	No	TA-16	NA	90580	NA	0.527	NA	5.004	NA	745	NA	2.7	1.7	NA	NA	9483	NA	NA
FS2026	TA-69-25S weathered R	R	No	TA-69	37000	104900	<5	0.52	5.4	4.914	190	434.6	1.7	2.5	<1	<0.4	3300	5921	47.8	16
FS2029	TA-69-25S fracture fill	Other	No	TA-69	43000	113800	<5	1.273	6.2	10.3	150	183.8	2	3.3	<1	<0.4	4200	9127	103	23
FS2030	TA-16-10 CO3 rich	CaCO3	No	TA-16	24000	77800	<5	0.402	6.3	4.946	430	828.9	1.1	2.4	<1	<0.4	26000	37070	17.8	11
FS2033	TA-69-2N	Other	No	TA-69	52000	109200	<5	0.734	10.8	8.225	360	524.7	2.5	3	<1	<0.4	5700	8748	99.8	21
FS2035	TA-69NA-11	Other	No	TA-69	9400	51770	<5	0.63	5.3	6.022	100	464.1	0.67	1.6	<1	<0.4	1200	3980	16.8	10
FS2036	TA-69NA-11, FS-2035 Duplicate	Other	No	TA-69	NA	51590	NA	0.994	NA	9.135	NA	591.9	NA	1.5	<1	NA	NA	3933	NA	NA
FS2037	TA-69E	Other	No	TA-69	9700	55360	<5	0.754	4.1	5.254	73	690	0.68	1.5	<1	<0.4	1200	1932	17.7	9
FS2041	TA-16-08	Other	No	TA-16	24000	94120	<5	0.293	7.3	3.896	350	560	1.9	2.8	<1	3	2600	7821	12.5	12
FS2042	TA-69-A_(11)	Other	No	TA-69	7000	49660	<5	1.08	4.8	5.677	100	609.9	0.51	1.4	<1	1.2	1200	3543	14	8.3
FS2048	TA-16 WTT1-05	Other	No	TA-16	32000	89720	<5	0.472	4.7	4.453	300	723.7	2	2.95	<1	1	2900	8316	26.6	17
FS2049	TA-16 WTT1-07	Other	No	TA-16	32000	87870	<5	0.461	5.1	4.583	270	508.8	2	3	<1	3.6	2800	6299	12.6	17
FS2050	TA-16 Org. Mat.	Organic	No	TA-16	21000	69440	<5	1.004	6.5	7.263	180	493.9	1.3	1.9	<1	2	6000	8071	18.1	17
FS2051	TA-16-07	Other	No	TA-16	48000	99850	<5	0.592	3.6	5.358	300	648.1	2.6	3.2	<1	<2	3700	7357	22.1	23
FS2055	TA-69S Humic Layer (no. 18)	Organic	No	TA-69	11000	50260	<5	0.894	4.6	3.91	140	415.3	0.7	1.1	<1	0.5	3100	6587	18.9	10
FS2062	TA-69 NR	R	No	TA-69	8000	96630	<5	1.099	3.5	9.331	270	640.6	0.76	2.7	<1	<0.4	3200	9449	46.2	4.4
FS2063	TA-16 WTT1-04	Other	No	TA-16	19000	73740	<5	<0.269	4.8	1.995	180	618.5	1.1	3.3	<1	<0.4	2100	7837	15.8	8.7
FS2064	TA-16 WTTT1-8	Other	No	TA-16	10000	76010	<5	0.655	4.1	3.863	140	349.3	0.77	2.2	<1	<0.4	1900	6384	16.8	6.1
FS2070	TA-46-01-01 Bandelier Tuff	Tuff	No	TA-46	1100	67450	<5	<0.305	0.6	<2.576	8.7	124.8	0.18	2.4	<1	<0.4	540	<1978	15.5	0.6
FS2071	TA-46-01-02 Fracture Fill A	Other	No	TA-46	50000	101400	<5	1.59	10.6	10.81	300	398.3	3.2	2	<1	<0.4	11000	14180	13.7	27
FS2072	TA-46-01-03 Fracture Fill B	Other	No	TA-46	21000	108300	<5	1.441	5.4	9.73	180	377.2	1	4.3	<1	<0.4	2900	10770	13	10
FS2073	TA-46-01-04 soil	Other	No	TA-46	17000	76120	<5	0.321	5.1	3.054	100	254.3	0.85	2.3	<1	<0.4	1800	4116	11.4	10
FS2074	TA-46-02-05 Bandelier Tuff	Tuff	No	TA-46	1900	67110	<5	<0.484	1.5	3.494	4.8	126	0.29	2.2	<1	<0.4	200	<1848	31.7	<0.5
FS2075	TA-46-02-06 Coarse Fracture Fill (outer)	Other	No	TA-46	14000	81960	<5	<0.306	3.9	2.862	24	414.1	0.86	1.6	<1	<0.4	1700	3472	574	6
FS2076	TA-46-02-07 Fine Fracture Fill (Inner)	Other	No	TA-46	56000	105800	<5	0.645	13.6	10.12	69	139.8	3.4	3.9	<1	<0.4	6200	5094	724	24
FS2117	TA-63a fracture fill	Other	No	TA-63	32000	97000	0.6	1.1	<0.3	21	280	390	2	3.6	NA	NA	5400	5200	12	19
FS2204	Virgin Mesa BA	B	No	VM	3300	38000	<0.5	0.9	3	9	85	290	1.7	3.4	NA	NA	3700	4100	9	6.6
FS2204D1	Virgin Mesa BA	B	No	VM	NA	NA	<0.5	NA	3	NA	NA	NA	NA	NA	NA	NA	NA	NA	NA	NA
FS2205	Virgin Mesa Bt	B	No	VM	4500	34000	<0.5	1.2	4	10	240	380	2.6	4	NA	NA	20000	18000	13	6.9
FS2206	Virgin Mesa Bw or Pw	B	No	VM	6600	31000	<0.5	1.1	4	14	130	270	2.9	4.5	NA	NA	6500	6600	12	10
FS2207	Virgin Mesa CB	C	No	VM	3500	56000	<0.5	1.7	4	6	290	390	1.7	2.9	NA	NA	85000	66000	17	5.3

BG Soil - Data list for EPA

Sample ID	SAMPLE DESCRIPTION	Horizon	Included	Location	Chromium-TOTAL	Cobalt-3050	Cobalt-TOTAL	Copper-3050	Copper-TOTAL	Iron-3050	Iron-TOTAL	Lead-3050	Lead-TOTAL	Magnesium-3050	Magnesium-TOTAL	Manganese-3050	Manganese-TOTAL	Mercury-3050	Nickel-3050	Nickel-TOTAL	Potassium-3050
FS2015	ULAC Bwb-06 Fine Fraction	B	No	ULAC	9.079	26	1.951	1.6	<348.5	7900	11920	8	24	890	<3279	340	396	<0.1	3	NA	1100
FS2016	ULAC C-07 Fine Fraction	C	No	ULAC	18.51	24	3.043	1.2	<266.9	8500	14340	13	28	780	<1971	310	451.7	<0.1	5	NA	770
FS2017	ULAC A2-02 Fine Fraction	A	No	ULAC	20.12	14	4.834	8.6	<330.2	11000	16020	9	25	1600	3400	1000	1449	<0.1	8	NA	1800
FS2018	ULAC A1-01 Fine Fraction	A	No	ULAC	19.71	15	3.87	9.5	<453.7	10000	14940	38	56	1800	<4325	1100	1323	<0.1	6	NA	2000
FS2018D1	ULAC A1-01 Fine Fraction	A	No	ULAC	NA	NA	NA	NA	NA	NA	NA	NA	NA	NA	NA	NA	NA	NA	NA	NA	NA
FS2019	ULAC BW-04 Fine Fraction	B	No	ULAC	22.61	11	4.007	1.6	<284.3	7200	16150	6	28	1000	1807	400	574.7	<0.1	3.2	NA	1200
FS2019D1	LAB REP	B	No	ULAC	NA	11	NA	1	NA	8900	NA	<4	NA	1200	NA	430	NA	NA	4.7	NA	1500
FS2020	ULAC BA-03 Fine Fraction	B	No	ULAC	14.27	18	3.211	2	<253.6	6100	14980	10	27	680	<2363	360	481.5	<0.1	2	NA	930
FS2024	ULAC BA-03 Fine Fraction, FS-2020F Duplicate	B	No	ULAC	13.39	NA	2.856	NA	<360.1	NA	14750	NA	25	NA	<3449	NA	518.3	NA	NA	NA	NA
FS2025	TA-16 WTT1 CO3 Zone, FS-2006 Duplicate	CaCO3	No	TA-16	45.12	NA	6.855	NA	<237.4	NA	28440	NA	26	NA	5753	NA	535.9	NA	NA	NA	NA
FS2026	TA-69-25S weathered R	R	No	TA-69	32.4	12	9.309	3.9	<245.1	22000	29270	20	29	4000	6084	240	404.1	<0.1	13	NA	2800
FS2029	TA-69-25S fracture fill	Other	No	TA-69	58.35	8.5	6.824	8.5	<158.9	26000	43370	26	23	5000	13410	200	194.3	0.2	16	NA	4100
FS2030	TA-16-10 CO3 rich	CaCO3	No	TA-16	24.04	8.4	6.92	3.8	<367.5	13000	22390	12	28	3800	8150	200	472.6	<0.1	9	NA	3200
FS2033	TA-69-2N	Other	No	TA-69	43.94	8.7	7.116	8.8	<250.5	28000	40310	23	29	6300	10610	120	205.8	<0.1	20	NA	4600
FS2035	TA-69NA-11	Other	No	TA-69	40.86	24	12.21	<0.5	<224.1	14000	20390	18	27	1300	1785	770	966.1	<0.1	6	NA	1800
FS2036	TA-69NA-11, FS-2035 Duplicate	Other	No	TA-69	38.8	NA	15.24	NA	<322.5	NA	22340	NA	26	NA	<3081	NA	1141	NA	NA	NA	NA
FS2037	TA-69E	Other	No	TA-69	46.1	26	22.53	3.4	<207.8	10000	15680	19	25	1500	2347	410	454.6	<0.1	4.6	NA	1400
FS2041	TA-16-06	Other	No	TA-16	35.65	8	7.542	9	<231.4	17000	28090	14	25	3400	7443	270	438.3	<0.1	12	NA	2600
FS2042	TA-69-A (11)	Other	No	TA-69	37.61	15	7.201	3.2	<271.4	11000	15580	17	<14	1300	<2631	630	658.8	<0.1	8.3	NA	1300
FS2048	TA-16 WTT1-05	Other	No	TA-16	41.63	15	7.235	7.7	<229.3	20000	28090	19	25.5	4000	6956	260	393	<0.1	14	NA	3100
FS2049	TA-16 WTT1-07	Other	No	TA-16	41.57	9	7.747	9.4	<212	20000	26890	20	32	3800	5172	280	446.2	<0.1	16	NA	3000
FS2050	TA-16 Org. Mat.	Organic	No	TA-16	42.57	23	7.915	10	<261.3	18000	25620	16	26	3300	5470	430	440.6	<0.1	12	NA	2500
FS2051	TA-16-07	Other	No	TA-16	49.69	11	9.018	12	<208.7	26000	32120	22	30	5300	6732	300	483.5	<0.1	19	NA	4300
FS2055	TA-69S Humic Layer (no. 18)	Organic	No	TA-69	37.38	34	7.057	9.4	<212.3	11000	15110	26	33	1800	4405	450	531.8	<0.1	5.5	NA	1900
FS2062	TA-69 NR	R	No	TA-69	61.51	9.1	12.63	<0.5	<320.5	7100	38890	8	32	1600	9748	54	733.5	<0.1	4.4	NA	1100
FS2063	TA-16 WTT1-04	Other	No	TA-16	22.35	14	5.093	2	<229	12000	20960	13	29	2500	5101	120	301.7	<0.1	7.7	NA	2200
FS2064	TA-16 WTTT1-8	Other	No	TA-16	28.31	11	7.305	<0.5	<246.7	9300	21050	14	21.5	1600	<2349	260	539.6	<0.1	5	NA	1500
FS2070	TA-46-01-01 Bandelier Tuff	Tuff	No	TA-46	2.027	21	1.049	0.7	<274.8	4300	10860	<4	18	220	<2498	190	361.9	<0.1	<2	NA	300
FS2071	TA-46-01-02 Fracture Fill A	Other	No	TA-46	60.18	8.1	6.732	9	<232.3	31000	46230	22	20	12000	16790	130	203	0.2	22	NA	4300
FS2072	TA-46-01-03 Fracture Fill B	Other	No	TA-46	71.07	10	7.302	4.5	<171.8	13000	48640	35	41	2400	15190	280	208.6	0.1	7	NA	2300
FS2073	TA-46-01-04 soil	Other	No	TA-46	28.22	18	6.948	1.7	<227.2	12000	21690	14	26	2200	1331	170	322.9	<0.1	6	NA	1800
FS2074	TA-46-02-05 Bandelier Tuff	Tuff	No	TA-46	<1.599	46	0.443	<0.5	<392.4	5400	11240	3	19	180	<3672	180	376.9	<0.1	<2	NA	970
FS2075	TA-46-02-06 Coarse Fracture Fill (outer)	Other	No	TA-46	19.96	21	3.421	3.9	<288.3	11000	24190	13	27	2200	<3470	88	310.8	<0.1	7	NA	1200
FS2076	TA-46-02-07 Fine Fracture Fill (inner)	Other	No	TA-46	42.93	27	23.35	15	<288.6	30000	39310	31	42	7000	8993	520	624.9	0.1	25	NA	4600
FS2117	TA-63a fracture fill	Other	No	TA-63	45	3.8	7.9	11	12	22000	36000	20	40	5600	9100	170	230	NA	15	21	3300
FS2204	Virgin Mesa BA	B	No	VM	21	2.9	6.6	4.7	5.4	9600	19000	14	38	2200	3700	160	340	NA	6	11	2000
FS2204D1	Virgin Mesa BA	B	No	VM	NA	NA	NA	NA	NA	NA	NA	NA	NA	NA	NA	NA	NA	NA	NA	NA	NA
FS2205	Virgin Mesa Bt	B	No	VM	22	3.3	7	7.1	7.1	9900	20000	18	41	3000	5500	100	220	NA	9	16	2900
FS2206	Virgin Mesa Bw or Pw	B	No	VM	31	4.2	8.8	6.1	7.2	14000	24000	19	41	4200	6500	130	240	NA	12	18	4200
FS2207	Virgin Mesa CB	C	No	VM	13	3.1	4.6	8.4	7.2	7800	15000	11	37	4700	5800	87	200	NA	10	12	2300

BG Soil - Data list for EPA

Sample ID	SAMPLE DESCRIPTION	Horizon	Included	Location	Potassium-TOTAL	Selenium-3050	Sodium-3050	Sodium-TOTAL	Sulfate-3050	Tantalum-3050	Tantalum-TOTAL	Thallium-3050	Thallium-TOTAL	Thorium-3050	Thorium-TOTAL	Uranium-3050	Uranium-TOTAL	Vanadium-3050	Vanadium-TOTAL	Zinc-3050
FS2015	ULAC Bwb-06 Fine Fraction	B	No	ULAC	35760	<0.3	330	27580	23	<0.2	2.843	<0.2	NA	4	12.24	0.4	3.299	8.3	16.25	42
FS2016	ULAC C-07 Fine Fraction	C	No	ULAC	36210	<0.3	190	28530	16	<0.2	2.489	<0.2	NA	4	12.62	0.3	2.838	9	14.62	39
FS2017	ULAC A2-02 Fine Fraction	A	No	ULAC	21790	0.65	230	20140	32	<0.2	2.002	<0.2	NA	5	12.95	0.6	2.655	12	26.25	120
FS2018	ULAC A1-01 Fine Fraction	A	No	ULAC	27670	0.5	350	20490	52	<0.2	2.475	<0.2	NA	5	12.48	2.4	4.25	14	23.77	100
FS2018D1	ULAC A1-01 Fine Fraction	A	No	ULAC	NA	0.5	NA	NA	NA	<0.2	NA	<0.2	NA	5	NA	2.4	NA	NA	NA	NA
FS2019	ULAC BW-04 Fine Fraction	B	No	ULAC	34900	<0.2	240	26180	22	<0.2	2.462	<0.2	NA	4	13.85	0.4	3.051	9	22.62	32
FS2019D1	LAB REP	B	No	ULAC	NA	NA	310	NA	NA	NA	NA	NA	NA	NA	NA	NA	NA	12	NA	38
FS2020	ULAC BA-03 Fine Fraction	B	No	ULAC	28360	<0.2	240	26910	17	<0.2	2.294	<0.2	NA	4	13.17	0.4	2.612	7	13.21	29
FS2024	ULAC BA-03 Fine Fraction, FS-2020F Duplicate	B	No	ULAC	29940	NA	NA	27190	NA	NA	2.25	NA	NA	NA	11.24	NA	2.804	NA	17.26	NA
FS2025	TA-16 WTT1 CO3 Zone, FS-2006 Duplicate	CaCO3	No	TA-16	26140	NA	NA	16890	NA	NA	2.982	NA	NA	NA	19.36	NA	3.944	NA	58.88	NA
FS2026	TA-69-25S weathered R	R	No	TA-69	21460	1.2	710	16860	196	<0.2	2.46	0.7	NA	9	16.77	0.8	2.538	31	47.93	48
FS2029	TA-69-25S fracture fill	Other	No	TA-69	13040	1.1	510	3392	199	<0.2	1.907	0.7	NA	11	17.18	1.4	2.173	50	84.23	52
FS2030	TA-16-10 CO3 rich	CaCO3	No	TA-16	23010	0.6	1200	17090	130	<0.2	2.778	0.2	NA	8	16.34	2	4.791	28	46.73	26
FS2033	TA-69-2N	Other	No	TA-69	17160	1.5	590	10120	189	<0.2	2.657	0.9	NA	14	17.16	0.9	2.188	38	72.7	58
FS2035	TA-69NA-11	Other	No	TA-69	24300	<0.2	250	15100	63	<0.2	1.43	<0.2	NA	8	13.17	0.9	3.435	37	60.73	17
FS2036	TA-69NA-11, FS-2035 Duplicate	Other	No	TA-69	21960	NA	NA	14390	NA	NA	1.627	NA	NA	NA	12.32	NA	3.416	NA	62.11	NA
FS2037	TA-69E	Other	No	TA-69	20780	<0.2	230	15560	24	<0.2	1.705	0.2	NA	8	13.84	1	3.59	28	50.32	16
FS2041	TA-16-06	Other	No	TA-16	20640	0.6	250	14780	61	<0.2	2.739	0.4	NA	9	20.04	1	3.508	27	57.67	30
FS2042	TA-69-A (11)	Other	No	TA-69	22420	<0.2	170	13430	27	<0.2	1.528	<0.2	NA	5	11.05	1	3.574	27	45.34	16
FS2045	TA-16 WTT1-05	Other	No	TA-16	25760	0.6	630	16960	65	<0.2	2.941	0.4	NA	7	19.96	0.9	3.565	32	52.88	35
FS2049	TA-16 WTT1-07	Other	No	TA-16	23960	0.6	280	14720	45	<0.2	2.558	0.2	NA	8	19.27	1	3.641	34	62.17	37
FS2050	TA-16 Org. Mat.	Organic	No	TA-16	18800	0.3	280	10710	32	<0.2	1.864	0.4	NA	7	12.72	1	3.279	40	66.76	27
FS2051	TA-16-07	Other	No	TA-16	21480	0.3	330	13880	57	<0.2	2.893	<0.2	NA	4	19.93	0.7	3.482	42	62.38	50
FS2055	TA-69S Humic Layer (no. 18)	Organic	No	TA-69	18860	<0.2	200	13420	60	<0.2	1.266	0.2	NA	5	10.46	2	3.557	25	43.46	31
FS2062	TA-69 NR	R	No	TA-69	24990	<0.2	500	12560	95	<0.2	2.476	0.2	NA	4	18.01	0.4	3.724	9	96.99	17
FS2063	TA-16 WTT1-04	Other	No	TA-16	22210	0.8	830	17400	80	<0.2	2.505	<0.2	NA	7	17.56	0.7	3.073	20	36.64	23
FS2064	TA-16 WTTT1-8	Other	No	TA-16	20680	0.6	220	21300	31	<0.2	2.226	0.2	NA	8	15.76	1.5	3.696	17	35.84	21
FS2070	TA-46-01-01 Bandelier Tuff	Tuff	No	TA-46	41100	<0.2	270	32560	28	<0.2	3.231	<0.2	NA	5	15.22	0.7	3.468	<0.5	<6.398	27
FS2071	TA-46-01-02 Fracture Fill A	Other	No	TA-46	10390	0.9	870	2700	161	<0.2	1.92	0.5	NA	10	17.03	0.9	2.498	53	113.1	64
FS2072	TA-46-01-03 Fracture Fill B	Other	No	TA-46	11540	0.7	540	3271	304	<0.2	1.954	<0.2	NA	6	19.26	1.6	2.624	24	101.3	38
FS2073	TA-46-01-04 soil	Other	No	TA-46	30720	0.7	130	21090	27	<0.2	2.5	0.3	NA	8	17.99	1	3.851	23	42.37	25
FS2074	TA-46-02-05 Bandelier Tuff	Tuff	No	TA-46	37350	<0.2	810	31380	19	<0.2	3.413	<0.2	NA	5	14.58	0.9	3.512	2.8	<6.843	26
FS2075	TA-46-02-06 Coarse Fracture Fill (outer)	Other	No	TA-46	32120	0.3	670	30630	342	<0.2	1.547	<0.2	NA	5	10.09	0.6	1.545	14	23.56	43
FS2076	TA-46-02-07 Fine Fracture Fill (inner)	Other	No	TA-46	19120	2.4	2000	14540	462	<0.2	1.772	0.7	NA	15	27.3	2	3.208	47	75.41	66
FS2117	TA-63a fracture fill	Other	No	TA-63	21000	NA	220	9700	50	<0.2	3.4	0.4	1	12.5	24.8	0.8	4.2	28	83	63
FS2204	Virgin Mesa BA	B	No	VM	27000	NA	140	16000	17	<0.2	4	0.6	2	6.4	14.3	0.5	3.9	10	34	29
FS2204D1	Virgin Mesa BA	B	No	VM	NA	NA	NA	NA	NA	<0.2	NA	0.5	NA	6.1	NA	0.4	NA	NA	NA	NA
FS2205	Virgin Mesa Bt	B	No	VM	23000	NA	160	12000	23	<0.2	4.2	0.4	2.7	9.7	18.8	0.5	4.2	12	39	26
FS2206	Virgin Mesa Bw or Pw	B	No	VM	23000	NA	160	11000	20	<0.2	4.4	0.5	2.4	10.4	21.2	0.6	4.3	15	50	37
FS2207	Virgin Mesa CB	C	No	VM	25000	NA	360	15000	31	<0.2	3.5	0.2	2.4	6.1	13.6	0.6	4.5	13	28	23

BG Soil - Data list for EPA

Sample ID	SAMPLE DESCRIPTION	Horizon	Included	Location	Zinc-TOTAL
FS2015	ULAC Bwb-06 Fine Fraction	B	No	ULAC	<23.4
FS2016	ULAC C-07 Fine Fraction	C	No	ULAC	41.6
FS2017	ULAC A2-02 Fine Fraction	A	No	ULAC	146.2
FS2018	ULAC A1-01 Fine Fraction	A	No	ULAC	94.92
FS2018D1	ULAC A1-01 Fine Fraction	A	No	ULAC	NA
FS2019	ULAC BW-04 Fine Fraction	B	No	ULAC	45.38
FS2019D1	LAB REP	B	No	ULAC	NA
FS2020	ULAC BA-03 Fine Fraction	B	No	ULAC	60.89
FS2024	ULAC BA-03 Fine Fraction, FS-2020F Duplicate	B	No	ULAC	<41.97
FS2025	TA-16 WTT1 CO3 Zone, FS-2006 Duplicate	CaCO3	No	TA-16	<22.22
FS2026	TA-69-25S weathered R	R	No	TA-69	65.9
FS2029	TA-69-25S fracture fill	Other	No	TA-69	108.7
FS2030	TA-16-10 CO3 rich	CaCO3	No	TA-16	<15.23
FS2033	TA-69-2N	Other	No	TA-69	60.4
FS2035	TA-69NA-11	Other	No	TA-69	<6.952
FS2036	TA-69NA-11, FS-2035 Duplicate	Other	No	TA-69	<8.616
FS2037	TA-69E	Other	No	TA-69	<16.24
FS2041	TA-16-06	Other	No	TA-16	<10.28
FS2042	TA-69-A (11)	Other	No	TA-69	<10.22
FS2048	TA-16 WTT1-05	Other	No	TA-16	<21.55
FS2049	TA-16 WTT1-07	Other	No	TA-16	<8.994
FS2050	TA-16 Org. Mat.	Organic	No	TA-16	<13.52
FS2051	TA-16-07	Other	No	TA-16	<21.89
FS2055	TA-69S Humic Layer (no. 18)	Organic	No	TA-69	43.67
FS2062	TA-69 NR	R	No	TA-69	63.7
FS2063	TA-16 WTT1-04	Other	No	TA-16	<18.09
FS2064	TA-16 WTTT1-8	Other	No	TA-16	51.78
FS2070	TA-46-01-01 Bandelier Tuff	Tuff	No	TA-46	39.92
FS2071	TA-46-01-02 Fracture Fill A	Other	No	TA-46	<71.93
FS2072	TA-46-01-03 Fracture Fill B	Other	No	TA-46	<35.18
FS2073	TA-46-01-04 soil	Other	No	TA-46	43.97
FS2074	TA-46-02-05 Bandelier Tuff	Tuff	No	TA-46	<5.316
FS2075	TA-46-02-06 Coarse Fracture Fill (outer)	Other	No	TA-46	132.3
FS2076	TA-46-02-07 Fine Fracture Fill (inner)	Other	No	TA-46	92.97
FS2117	TA-63a fracture fill	Other	No	TA-63	110
FS2204	Virgin Mesa BA	B	No	VM	67
FS2204D1	Virgin Mesa BA	B	No	VM	NA
FS2205	Virgin Mesa Bt	B	No	VM	65
FS2206	Virgin Mesa Bw or Pw	B	No	VM	77
FS2207	Virgin Mesa CB	C	No	VM	49

ATTACHMENT 3

MINIRAM PERSONAL MONITOR
MODEL PDM-3
OPERATIONS MANUAL

March 1990

MIE, INC.
1 Federal Street, #2
Billerica, Massachusetts 01821
(508) 663-7900

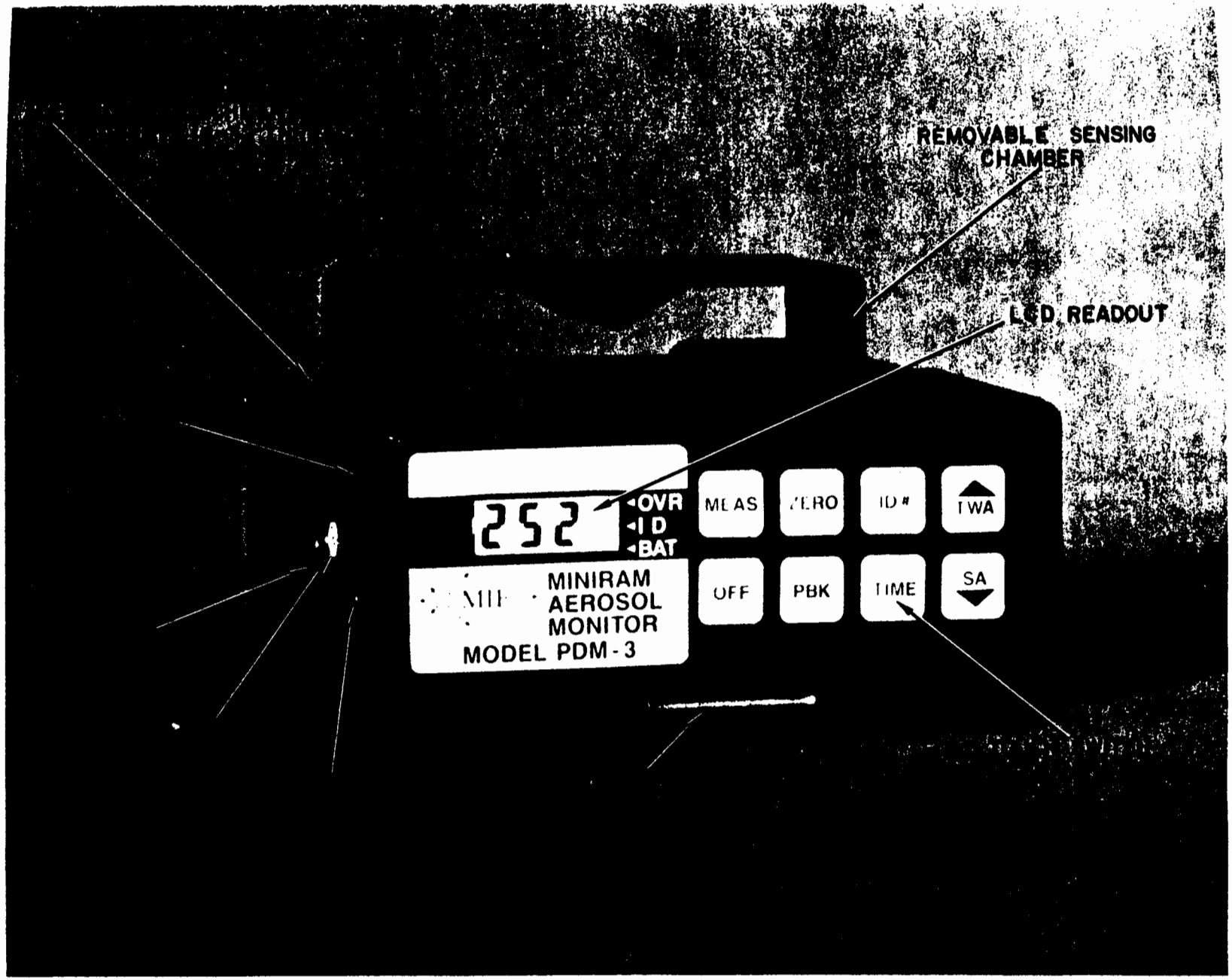

Figure 1. Main View of MINIRAM

TABLE OF CONTENTS

WARRANTY iii
1.0 DESCRIPTION 1
1.1 Sensing Method 1
1.2 Open Sensing Chamber Sampling Method 1
1.3 MINIRAM Electronics 2
1.4 Modes of Use and Application 2
2.0 WHEN YOUR RECEIVE THE MINIRAM 3
3.0 OPERATING INSTRUCTIONS 3
3.1 Initial Condition 3
3.2 To start Measurement Cycle 3
3.3 MEAS 4
3.4 MEAS and TIME 4
3.5 OFF 5
3.6 TIME 5
3.7 TWA 6
3.8 SA 6
3.9 PBK 6
3.10 ZERO 7
3.11 ID# 8
4.0 PROGRAMMABLE FUNCTIONS 8
4.1 ID# Selection 8
4.2 Programmable Selection Code 9
4.3 ID# Lock-out 10
4.4 Alarm Level Adjustment 10
5.0 OVERLOAD, ERROR CODES AND TROUBLESHOOTING 11
5.1 Bar Displays 11
5.2 Error Codes 11
5.3 Basic Troubleshooting 11
6.0 SENSING CHAMBER REMOVAL AND INSERTION 12
7.0 BATTERY PACK 13
7.1 Battery Pack Replacement 13
7.2 Battery Charging 13
8.0 CALIBRATION ADJUSTMENT 14
9.0 ANALOG RECORDER CONNECTION 15
10.0 USE OF OPTIONAL MIE DIGITAL PRINTER 15
10.1 Printer Connection 15
10.2 Printer Test 16
10.3 Printout of Stored Data 16
10.4 Printout of Zero or of Measurement Data 16
11.0 DIGITAL OUTPUT CONNECTIONS 16
12.0 ROUTINE MAINTENANCE 17
13.0 PRECAUTIONS AND OPERATING POSITIONS 17
14.0 INTRINSIC SAFETY 18
15.0 SPECIFICATIONS 18
16.0 STANDARD ACCESSORIES 19
16.1 Battery Charger 19
16.2 Sunshield (MIE model PDM-SNS) 19
16.3 Z-Bag™ Calibrator 20
16.4 Carrying Case (MIE model PDM-HC) 20
16.5 Other Standard Accessories 20
17.0 OPTIONAL ACCESSORIES 21

17.1 Flow Adapter (MIE model PDM-1F).....21
17.2 Zero Check Module (MIE model PDM-1FZ).....21
17.3 Personal Sampler Adapter (MIE model PDM-2FS).....22
17.4 Shoulder Strap (MIE model PDM-SS).....22
17.5 Table Stand (MIE model PDM-TS).....22
17.6 Dot Matrix Digital Printer (MIE model DP-2-80C).....23
17.7 Reference Scatterer (MIE model PDM-RS).....23
17.8 Cable (MIE model PDM-CB).....23
17.9 Portable Data Logger (MIE model PDL-10).....24
18.0 DOWNLOADING FROM PDM-3 OR PDL-10 TO IBM COMPATIBLE COMPUTER USING WINDOWS.....24

1.0 DESCRIPTION

1.1 Sensing Method

The MINIRAM (Miniature Real-time Aerosol Monitor) Model PDM-3 is an ultra-compact personal-size airborne particulate monitor whose operating principle is based on the detection of scattered electromagnetic radiation in the near infrared. The MINIRAM uses a pulsed GaAlAs light emitting source, which generates a narrow-band emission (half-power width of 80 nm) centered at 880 nm. This source is operated at an average output power of about 2 mW. The radiation scattered by airborne particles is sensed over an angular range of approximately 45° to 95° from the forward direction by means of a silicon-photovoltaic hybrid detector with internal low-noise preamplifier. An optical interference-type filter is incorporated to screen out any light whose wavelength differs from that of the pulsed source.

The MINIRAM is a light scattering aerosol monitor of the nephelometric type, i.e., the instrument continuously senses the combined scattering from the population of particles present within its sensing volume (approximately 1 cm^3) whose dimensions are large compared with the average separation between the individual airborne particles.

1.2 Open Sensing Chamber Sampling Method

Air surrounding the MINIRAM passes freely through the open aerosol sensing chamber as a result of air transport caused by convection, circulation, ventilation, and personnel movement. The MINIRAM requires no pump for its operation, and the scattering sensing parameters have been designed for preferential response to the particle size range of 0.1 to 10 micrometers, ensuring high correlation with standard gravimetric measurements of both the respirable and inhalable size fractions. Optional flow accessories are available for applications requiring specific inertial particle precollection, extractive sampling, concurrent filter collection, etc.

It should be noted that one of the advantages of direct light scattering aerosol sensing is that the rate at which air passes through the sensor does not influence the indicated concentration because the detection is performed directly on every parcel of air traversing the fixed sensing volume. Therefore, flow velocity through a real-time sensor such as the MINIRAM influences only the response time. So, it should not surprise the first-time user when, upon pressing the MEAS key of the MINIRAM, no pump noise is heard, and this silence will be accompanied by a readout message of "GO" on the liquid-crystal display indicating that the MINIRAM has, indeed, been activated.

1.3 MINIRAM Electronics

The MIE MINIRAM is a very advanced aerosol monitor which incorporates a custom-designed single-chip CMOS microprocessor whose functions are to: process the signal from the light scattering detection circuit, control the measurement sequence program, compute concentration averages, keep record of elapsed time, perform automatic zero correction, control auto-ranging, drive the liquid-crystal-display, store average concentration values as well as timing and identification information, sense battery and overload conditions, sequence playback of stored information, and provide alarm signals.

The MINIRAM derives its power from a set of internal rechargeable Ni-Cd batteries which can provide continuous monitoring operation for over 8 1/2 hours, or retain stored information for up to approximately 6 months. The battery set is packaged as a separable module which allows easy field replacement when recharging is not feasible. The MINIRAM can be run without time limit from an A.C. line using the charger provided with the instrument.

During the normal monitoring operation, the liquid-crystal-display indicates the aerosol concentration in the units of milligrams per cubic meter, and the displayed reading is updated every 10 seconds. When operating in the measurement or monitoring mode, other functions can be displayed momentarily, i.e., as long as a corresponding touch switch is pressed. All external controls are performed by pressing one or more of 8 sealed touch switches on the MINIRAM panel. Stored information playback can be accomplished either by means of the MINIRAM's own display or through the digital output jack. The MINIRAM has two output connectors. One provides a continuous, real-time analog signal output proportional to the aerosol concentration. This signal can be used for continuous recording (e.g., on a strip chart recorder), telemetry, or control purposes, etc. The other connector provides, during the measurement mode, either an ASCII digital output of the 10 second averages, or a switched output for alarm purposes (depending on the user-selected function).

1.4 Modes of Use and Application

The MINIRAM measures the concentration of any airborne particles, both solid and liquid, and the display indicates this level in the units of milligrams per cubic meter, based on its factory calibration, against a filter-gravimetric reference, using a standard test dust (Arizona road dust). The MINIRAM can be used to measure the concentration of all forms of aerosol: dusts, fumes, smokes, fogs, etc.

Its small size and weight, and concentration averaging features permit its use as a personal exposure monitor, attached to a belt, shoulder strap, hard hat, etc. Alternatively, it can be used as an area monitor for both indoor and ambient air situations. Test chamber monitoring, visibility measurements, cloud detection (e.g., radio/drop sonde), aerosol dispersion studies, etc. are additional applications of the MINIRAM.

2.0 WHEN YOUR RECEIVE THE MINIRAM ...

Follow these steps when first receiving your MINIRAM:

2.1. Remove the instrument from shipping case.

2.2. Observe display. It should be blank indicating that the MINIRAM is in the minimum power mode.

2.3. Plug charger into A.C. line (standard charger is for 120V, 60 Hz; optional version available for 220V, 50 Hz).

2.4. Connect charger plug into corresponding MINIRAM receptacle.

2.5. Leave charger connected to MINIRAM for a minimum of 8 hours before using instrument without the charger.

2.6. You can operate the MINIRAM immediately after the charger has been connected. Follow operating instructions described in the next section of this manual.

3.0 OPERATING INSTRUCTIONS

Refer to Figure 1 for the location of control switches, display, and connector jacks. Refer to Figure 2 for the display timing sequences.

3.1 Initial Condition

Assuming that the batteries of the MINIRAM have been recharged (see section 2.0), the display may indicate one of the following conditions:

- Blank display: Means the MINIRAM had not been in the measurement mode for 48 hours or more, and is in the minimum power off mode.
- "OFF" display: MINIRAM has been in the off mode for less than 48 hours.
- Concentration display that changes or "blinks" once every 10 seconds: the MINIRAM is in the measurement mode.

3.2 To start Measurement Cycle

- If the MINIRAM shows a blanked display (see above), press OFF and wait until the display reads "OFF" (approximately 5 seconds after pressing OFF), before pressing MEAS to initiate measurement cycle.
- If the MINIRAM shows "OFF" (see above), press MEAS directly to initiate measurement cycle (there is no need to press OFF first, in this case).

The functions performed by pressing each MINIRAM touch switch are as follows:

3.3 MEAS

To start the monitoring operation of the MINIRAM, Press MEAS (see automatic timing sequence of Figure 2). The first readout displayed is either "GO" (or "CGO" if TIME is also pressed, section 3.4), followed by the last concentration reading or ".00". Approximately 36 seconds after pressing MEAS the first new 10-second averaged concentration reading is displayed. All subsequent readings are concentration values in milligrams per cubic meter, updated every 10 seconds. Figure 3 shows a typical digital printout of a sequence of 10-second measurements (second data block).

The MINIRAM will now run in the measurement mode for 500 minutes (8 hours and 20 minutes), after which it will stop, displaying the OFF reading, retaining in storage the concentration average and elapsed time information. Once the MEAS mode has been entered this sequence can only be interrupted by pressing OFF; pressing ZERO, TWA, SA, TIME or ID# only affects the display during the time these keys are pressed, without affecting the measurement cycle. Pressing PBK during this cycle has no effect.

The instrument normally operates in the .00 to 9.99 mg/m^3 range. Whenever a 10-second concentration exceeds 9.99 mg/m^3 the MINIRAM display automatically switches to the .0 to 99.9 mg/m^3 range and remains in that range as long as the measured 10-second concentration exceeds 9.99 mg/m^3, otherwise the MINIRAM reverts to its lower range display.

3.4 MEAS and TIME

If both MEAS and TIME are pressed at the same time (press TIME first and while depressing it actuate MEAS) the MINIRAM will display "CGO" (for Continuous "GO"), and will then operate as above (i.e., pressing MEAS only), except that after the first 8.3 hour run it will restart automatically and continue to measure for an indefinite number of 8.3 hour runs, (with the battery charger) until the OFF key is pressed, or until the batteries are exhausted at which time the MINIRAM shuts off automatically, displaying the "OFF" reading. Concentration averages and timing information for the last seven 8.3 hour runs will remain in storage at any given time.

3.5 OFF

When this key is pressed the MINIRAM will discontinue whatever mode is underway displaying "GCA"* followed by the display segments check ("8.8.8=") and finally "OFF" (see timing diagram of Figure 2). The MINIRAM will then remain in this reduced power condition (displaying "OFF") for a minimum of 10 minutes or a maximum of 48 hours or until the MEAS key is pressed to resume the measurement cycle.

If OFF is pressed during a measurement run the display will read "OFF" for 48 hours (unless another key is pressed during that period), after which the display will be blanked. If OFF is pressed while the display is blank, the MINIRAM will display the "OFF" reading for only 10 minutes, after which the display will be blanked again unless another key is pressed during that period.

Every time the OFF key is pressed, during a measurement cycle, the MINIRAM will store the concentration average and elapsed monitoring time up to the time of that OFF command. The duration of the off period (up to 48 hours), i.e., between two consecutive measurement cycles, is also stored for each of up to 7 cycles.

If the MINIRAM is not reactivated (i.e., pressing MEAS) within 48 hours of the OFF Command, it automatically switches to a minimum power level, with blanked display; however, all data remains stored in memory for up to approximately 6 months without battery recharging (indefinitely, with charger).

<u>OFF must be keyed before any other operating mode can be entered</u>: setting ID#, zero referencing, playing back stored data, or changing the program code. Display functions, however, can be activated during the measurement mode.

3.6 TIME

During the measurement mode, if TIME is pressed the display will show the elapsed time, in minutes, to three significant figures, from the start of the last measurement run. The MINIRAM will automatically return to concentration display after the TIME key is released.

---

* "GCA" is displayed and printed out by the MINIRAM although the instrument is manufactured exclusively by MIE, Inc.

3.7 TWA

This key stands for Time-Weighted-Average. During the measurement mode, if TWA is pressed the display will indicate the average concentration in milligrams/m^3 up to that instant, from the start of the last run. This average is computed by the MINIRAM applying the equation:

$$TWA = \frac{1}{t}\int_0^t C\,dt$$

where t is the elapsed run time and C is the instantaneous concentration at time t. The value of TWA is updated every 10 seconds. After releasing the TWA key the MINIRAM display returns to the 10-second concentration display.

3.8 SA

This key stands for Shift-Average. During the measurement mode, pressing SA will provide a display of the aerosol concentration, up to that moment, averaged over an 8-hour shift period. This average is computed by the MINIRAM applying the equation:

$$SA = \frac{1}{480\ \text{min.}} \int_0^t C\,dt$$

The shift-average value corresponds to the exposure from the start of the measurement cycle. Thus, for example, if the MINIRAM has been measuring for 3 hours, and the time-weighted average over that period has been 6 mg/m^3
(TWA reading), the shift average value at that time, (SA reading) would be 2.25 mg/m^3, which is equivalent to an 8-hour exposure at an average concentration of 2.25 mg/m^3.

The value of SA is updated every 10 seconds. When releasing the SA key the MINIRAM display returns to the 10-second concentration display.

3.9 PBK

With the MINIRAM in the off mode (i.e., not in the measurement mode), the stored information can be played back by pressing PBK. If the PBK key is initially pressed the display will indicate "P" for one second. If PBK continues to be pressed for more than 1 second, then the stored data is automatically played back through the MINIRAM display: First, the identification number is displayed with the ID indicator bar on; next the shift or run number (7 through 1, i.e., starting with the last run) is shown (with the OVR indicator bar on as identification); followed by the sampling (i.e., measurement) time in minutes, for that run; followed by the off-time between the last and next run (in

tens of minutes); finally, the average in mg/m^3.* This sequence is repeated seven times. An average reading of 9.99 indicates that a significant overload condition occurred during that run. The total time required for the complete automatic playback on the MINIRAM display is approximately 70 seconds.

If PBK is pressed for less than one second "PA" will be displayed, and the stored data will be fed out through the digital output jack of the MINIRAM for printout, magnetic storage, telemetry, etc. A printout consists of 8 lines of data. Figure 3 shows a typical stored data printout (see data block labeled "Playback of Stored Data"). The first 7 lines show the data for the last 7 measurement periods, and the last line shows the identification number (I), the programmable selection code (F), and the zero value for that data block (Z). In addition a check sum is printed out on a 9th line for modem/computer data transfer purposes. The first 7 data lines are subdivided into 4 columns. The first column identifies the measurement period (starting with the last or 7th); the next column lists the corresponding duration of each measurement period, in minutes; the third column lists the off time between consecutive measurement periods, in minutes divided by 10; and the last column lists the average concentration values for each period in mg/m^3.*

Either time-weighted, or shift average values can be printed, depending on the selected programmable code (see section 4.2). The example shown on Figure 3 (F=0012) indicates that the TWA values are listed. Although the printout heading will indicate "PDM-2 LISTING" (as shown in Figure 3), this format applies equally to the MINIRAM model PDM-3.

The speed of the digital transfer to a printer or other digital device can be user selected through the programmable selection code (see section 4.2). For a 300 baud rate the transfer time for the stored data block is approximately 45 seconds. See sections 10.0 and 11.0 for instructions on how to connect the MINIRAM to a printer or other digital recording/processing device.

3.10 ZERO

The interior walls of the MINIRAM sampling chamber reflect a small amount of the light from the infrared source into the detector. This background level is referred to as the "zero value", and is automatically subtracted from all aerosol concentration readings during the measurement mode. The result is that the displayed readings depend only on the actual dust concentration present within the sensing chamber.

The zero value varies from instrument to instrument as well as with different sensing chambers. It will increase somewhat as the chamber inner walls and windows become contaminated with dust. A zero update should be performed after cleaning the sensing chamber (see section 12.0).

---

* Either the TWA or the SA values, depending on selected user-programmable code (see Section 4.2).

Pressing ZERO during a measurement period provides momentary display of the stored zero concentration value used by the MINIRAM to correct all digital concentration readings (the analog output signal is not zero-corrected). To update the ZERO value the MINIRAM must be in its off condition (press OFF in case of doubt). Then, press ZERO and wait until the display again indicates "OFF".

The average of 4 consecutive 10-second zero level measurements will then be stored by the MINIRAM as the new ZERO reference value. (See timing diagram in Figure 2 and digital printout obtained during a typical zero check on Figure 3). When operating the MINIRAM in high particle concentration environments (>5 mg/m^3) the zero value update should be performed approximately every 8 hours. At aerosol concentrations below approximately 1 mg/m^3 this update may only be required once a week, or even less frequently. The zero update should be performed either within a clean-air environment (ideally, a clean room or clean-bench) or using one of the accessories provided by MIE for that purpose: either the Z-Bag (standard accessory, see Section 16.3), or the Zero Check Module PDM-1FZ (optional accessory, see Section 17.2). The latter should be used for zeroing only when subsequent measurements are at concentrations greater than approximately 0.5 mg/m^3, or if the PDM-1FZ is left on the MINIRAM for active air sampling (see Section 17.2). Air conditioned offices (without smokers) usually have concentrations below approximately 0.05 mg/m^3 and can thus be used for zeroing purposes, if a Z-Bag is not available (see Section 16.3 for instructions on the use of the Z-Bag). When measurements are performed under essentially clean air conditions, e.g., in the same environment where the zero check was performed, the MINIRAM readings will indicate 0.00 mg/m^3 with small random fluctuations around that value. Positive values (e.g., 0.02) will thus be indicated on the LCD display. Negative values (e.g., -0.02) are suppressed and are also indicated as 0.00. The digital output, however, does include such negative values and these will be printed out by a digital printer (see sections 10.0 and 11.0).

3.11 ID#

Pressing ID# during a measurement period provides momentary display of the identification number stored within the MINIRAM memory.

The ID# key, in combination with other keys, is used for several additional programming functions described in the next section (4.0).

4.0 PROGRAMMABLE FUNCTIONS

4.1 ID# Selection

In order to change the instrument identification number the MINIRAM must first be in the off mode (i.e., press OFF). Then press the ID# key, and the presently stored number (between 1 and 999) will be displayed, as well as the ID indicator bar. To increment the identification number press the s key (same key as TWA), and to decrement the number press the t key (same key as SA). Any number between 1 and 999 can thus be selected and will remain in storage until the batteries are disconnected, or if the MINIRAM is not recharged over a 6-month period.

Pressing the OFF key after the above identification number selection will remove the MINIRAM from the ID# selection routine and lock-in that number until a new number is selected. A complete ID# lock-out (i.e., a routine to preclude panel-control change of that number) can be accomplished by a separate programmable code selection (see section 4.2).

4.2 Programmable Selection Code

The programmable code allows the user to panel-select several alternate functions and operating modes.

The program codes to select specific alternate operating modes are:

1	selects the alarm instead of ASCII digital output
2	selects the ID# lock-out
4	selects the TWA instead of the SA to be stored for playback
8	selects a 1-second pause after each printer carriage return (for slow printers)
32	selects 110 baud digital output rate instead of 300 baud
64	selects 600 baud digital output rate instead of 300 baud

These numbers are entered as a sum, e.g., to implement ID# lock out, TWA storage, and 1-second carriage return delay, the code number would be 14 (2+4+8).

To enter the desired code (e.g., 14) follow these steps:

- Press OFF key and wait until "OFF" is displayed.
- Press ID# key and set program code to desired number (e.g., 14) by means of the s and t keys.
- Press TIME key (this will show previously entered code).
- Press ID# key again to lock in the new program code which will then be displayed.
- The preceding steps will cause the ID# to become equal to the programmable selection code. To restore the desired ID# (without affecting the selected code number which is now locked in), use the s and t keys again to select the ID# for the instrument as described in section 4.1.
- Press OFF to exit the ID# selection routine.

- To look at the programmed code number, at any time, start from the off condition; press ID#, then press TIME ("F" will then be displayed momentarily), after which the code number will be displayed. Press OFF to exit the code number routine.

If no specific alternate code is entered the MINIRAM will operate in its standard mode (equivalent to code 12) consisting of the following:

- ASCII digital output
- Panel-selectable ID number (preset to 999)
- Time-Weighted Average (TWA) values in memory storage
- 7-bit ASCII resolution
- 300 baud digital output
- Printer carriage return followed by a 1 second delay

4.3 ID# Lock-out

If the ID# lock-out code has been selected (i.e., a 2 as part of the sum, as described in section 4.2) then both the ID# and the programmable code can only be displayed (and printed out), but neither of the two can then be changed by means of the panel keys. In this case, in order to change the ID# if the lock-out code has been selected, or too alter the programmable code, the battery must be unplugged momentarily. Disconnecting the battery, however, causes the MINIRAM to lose all stored data, and cancels all alternate program codes which may then be restored following the procedure described in section 4.2.

4.4 Alarm Level Adjustment

If the selected program code includes a 1, the MINIRAM will not provide an ASCII digital output but instead a switched output (at the digital output connector) which will close every time the measured 10-second concentration value exceeds a presettable threshold concentration level. If a 1 has been included in the code, then the ID# divided by 10 becomes the alarm level in milligrams/m^3. This level can be adjusted following the ID# selection procedure of section 4.1, that is using the s and t keys to increment or decrement the number. For example, if an alarm level of 12.5 mg/m^3 is desired (and starting from the off mode), press ID#, adjust displayed number to 125 with the s and t keys, and press OFF. This number (e.g., 125) then becomes the ID# as well. It is not possible to enter a separate alarm level and ID# number.

5.0 OVERLOAD, ERROR CODES AND TROUBLESHOOTING

5.1 Bar Displays

There are three bar indicators on the MINIRAM display, identified as OVR, ID, and BAT. If the OVR bar is displayed at any time during operation in the measurement mode the MINIRAM detection circuit has been overloaded. A momentary overload can be caused by the insertion of an object into the sensing chamber, sudden exposure to sunlight, etc. If the cause of overload is eliminated, the OVR bar will disappear during the next 10-second display period, unless the overload persists for more than a total of 1 1/2 minutes over an 8 1/3 hour measurement cycle.

The ID bar display is activated only for display identification purposes and not for error conditions.

The BAT bar is displayed when the battery voltage becomes insufficient, indicating that the charger should be plugged into the MINIRAM.

5.2 Error Codes

The MINIRAM will display and output (at the digital output jack) error code numbers along with the corresponding overload indicator bars on the LCD readout. These codes will appear only if the problem persists for more than about 30 seconds.

The error code numbers are as follows:

.0.1: low battery condition

.0.2: RAM (digital processing)

.0.3: A/D (signal) overload

If an overload condition persists for more than approximately 1 1/2 minutes the selected concentration average value (SA or TWA) automatically registers 9.99 and that number will be indicated (or digitally transmitted) upon data playback, signifying an invalid measurement cycle. The OVR bar will then remain on for the rest of that run.

5.3 Basic Troubleshooting

1. No response when OFF key is pressed, display remains blank

   a) Batteries exhausted, recharge battery pack. If after charging, unit still does not function, check the following:
   b) Measure output of battery charger. A volt meter should read about 24.5 Va.c.
   c) If charger is ok, remove battery pack and slightly separate 2 gray connectors. Attach voltmeter + lead to red wire and - lead to black wire. Voltmeter should read about 8.5 Vd.c. while plugged into the charger.
   d) If battery pack is ok check the fuse on the circuit board. Fuse is located 3/8 inch behind analog output jack and is designated F1 on the circuit board.

Leaving the - lead of the voltmeter connected to the battery pack use + lead to check voltage on both sides of fuse. Voltage should be the same as in C above. If not, fuse must be replaced. This is preferably done at the factory.

2. Unit constantly displays .0.3-

This indicates electronic component failure. Unit should be sent back to MIE for repair and recalibration.

3. Improper Display segments appear

Usually an indication that the circuit board and/or display board has been contaminated. This may be corrected by removing the battery pack and cleaning affected areas with a small brush. Do Not Use any cleaning fluids or solvents on circuit boards. If brushing does not correct problem unit should be sent to MIE for repair.

4. Pressing TWA, ID, TIME keys, etc. during MEAS mode causes unit to shut off

a) Keypad failure: Unit should be sent for repair
b) Display board contamination: clean board as in 3 above

6.0 SENSING CHAMBER REMOVAL AND INSERTION

During normal operation of the MINIRAM the removable sensing chamber (see Figure 1) must be properly inserted, i.e., pushed all the way into the MINIRAM towards the display/control panel end of the instrument. When this chamber is properly positioned the surface on the opposite end from the display/control panel will be approximately flush with the body of the MINIRAM.

To remove the sensing chamber, gently push it away from the display/control panel end, using both thumbs, sliding it out of its channel. This will expose the shouldered metal button with its small spring-loaded plunger, and the two lenses (illumination and detection lenses). Touching of these lenses should be avoided to prevent their soiling. Lens tissue should be used if cleaning of these lenses becomes necessary.

The removable sensing chamber has two small glass windows which should be kept clean (see section 12.0 on routine maintenance).

The sensing chamber is partially closed at one of its open ends. This end is inserted first when sliding the chamber back into the MINIRAM channel. A small shouldered slot is provided on the underside of the removable sensing chamber for the metal button that serves to retain the chamber.

To reinsert the sensing chamber simply slide it back into position making sure that the chamber is moved parallel to the MINIRAM body. Ensure complete insertion, as mentioned above.

7.0 BATTERY PACK

7.1 Battery Pack Replacement

The battery pack of the MINIRAM (MIE Part No. PDM-1-101-1) constitutes an intrinsically safe sealed module that can be removed and replaced. To do so, remove the four central screws from the back of the MINIRAM case (not the two corner screws), and gently lift the battery pack up and out, and gently pull apart the battery connector, freeing the battery pack. Reverse order of steps when installing another pack.

CAUTION: ALL STORED DATA WILL BE LOST WHEN DISCONNECTING BATTERY

After reconnecting battery pack, the ID resets to 999 and an automatic zero reference check is performed by the MINIRAM.

Separate battery packs can be used whenever a.c. line power is unavailable to recharge the pack within the MINIRAM. These spare parts can be recharged independently from the MINIRAM by plugging the charger into the charge receptacle which is an integral part of the battery pack (see figure 1).

7.2 Battery Charging

When the MINIRAM battery pack is discharged (see Section 5.0) the MINIRAM batteries should be recharged for a minimum of 14 hours, using only the charger provided with the MINIRAM (Model PDM-1-157-1). The charger can be left connected for an indefinite time to the MINIRAM without danger of overcharging. It is advisable to occasionally discharge the batteries completely (see Section 3.4) and then recharge them as described above, in order to maintain their full capacity.

8.0 CALIBRATION ADJUSTMENT

Although every MINIRAM has been factory-calibrated using a representative dust (see section 1.4), the user may wish to change the calibration constant of the instrument for a specific type of aerosol. Such a calibration should be performed by obtaining a concurrent filter collection (e.g., by means of a personal filter sampler), sampling from the same environment within which the MINIRAM is placed. The average concentration obtained by the MINIRAM (i.e. TWA reading) at the end of the test should be compared with the filter-gravimetric-determined concentration. The ratio of the two concentration values can then be used to correct the MINIRAM calibration. The comparison run should be replicated several times (to minimize errors) to obtain an average ratio.

To change the MINIRAM calibration proceed as follows:

8.1 Place MINIRAM in a clean environment (e.g. air conditioned office).

8.2 Remove battery pack (follow procedure of section 7.0).

8.3 Disconnect battery connector (remember that all stored data will thus be lost/erased from MINIRAM memory).

8.4 While leaving battery pack lying next to MINIRAM, re-connect the two units (i.e. plug in connector).

8.5 Immediately observe MINIRAM display. It will be performing a slow segment-by-segment display checkout. As soon as it displays ".00", press OFF, thus interrupting the initial automatic zero check (see section 7.0). Wait until the display indicates "OFF" and then press MEAS and wait approximately 36 seconds.

8.6 Observe 10-second readings (typically in the range of 1 to 3 mg/m^3) and record manually a few consecutive readings. Calculate the average of these values.

8.7 Identify small potentiometer screw (visible through an opening in the foil shield of the open MINIRAM) opposite the digital output jack. Adjust this potentiometer, using a fine screw driver, until the average MINIRAM reading is increased or decreased (with respect to the average obtained in 8.6) by the desired ratio (e.g. as determined by previous gravimetric comparison runs).

8.8 Shut off MINIRAM, reposition and secure battery pack, and re-zero instrument as usual. All subsequent concentration readings are now corrected by the desired ratio.

If an optional Reference Scatterer (MIE model PDM-RS) is available, insert it in the MINIRAM instead of the normal sensing chamber and follow the same procedure (i.e., follow steps 8.1 through 8.8).

9.0 ANALOG RECORDER CONNECTION

The analog output of the MINIRAM is a negative voltage of 0 to 1.5 V. A high input impedance recorder (100KΩ), or other signal processing device can be connected to that output. The 0 to -1.5V range corresponds approximately to 0 to 100 mg/m^3 as displayed by the MINIRAM.

This analog output (as opposed to the digital output and readings) is not zero-corrected, and thus a zero concentration results in a bias level of the order of several millivolts.

It is advisable to connect a capacitor in parallel with (i.e. across) the analog output (e.g. 100 microfarads or larger) in order to obtain a steady output signal. The internal time constant of the analog output of the MINIRAM is only 0.2 seconds which, in the absence of an external capacitor, results in excessive signal fluctuations.

Two miniature plugs are provided with the instrument to connect to the analog and/or digital output jacks (both can be used concurrently).

10.0 USE OF OPTIONAL MIE DIGITAL PRINTER

The MINIRAM can be connected to the MIE model DP-2-80C digital printer, an optional accessory designed for direct coupling to the MINIRAM. This printer can be used both to print out the continuous concentration data (updated every 10 seconds) in the normal measurement mode, and to print out the data stored in the MINIRAM memory as described in section 3.9.

An example of the printout formats when using the printer in combination with the MINIRAM is presented in figure 3. The DP-2-80C, a very compact impact dot matrix printer operates with the MINIRAM using the PDM-DI interconnecting cable connected to the output jack. When using the MINIRAM with this printer, the output data rate should be left at 300 baud (the normal MINIRAM default value), as described in section 4.2.

The following are specific operation procedures for use of the printer in combination with the MINIRAM. Other operating and maintenance information is contained in the instruction manual that accompanies the printer.

10.1 Printer Connection

Plug printer cable (MIE model PDM-CB) into the MINIRAM digital output receptacle and press OFF. Turn on the printer power switch (on its right side) and the two green lights on the front will be on if printing paper is in the unit. The ribbon cartridge should have been previously loaded. Refer to the printer User's Manual for details.

10.2 Printer Test

In order to test whether the DP-2-80C printer is operating correctly, hold down the LINE FEED button while turning the printer on. Once the printer is on, release the LINE FEED button and the printer will then print out all of its characters. To stop this operation press SELECT.

10.3 Printout of Stored Data

Plug printer connector into the MINIRAM digital output receptacle. Turn off printer power switch. Press OFF on MINIRAM and wait until it reads "OFF". Turn on printer power switch. Press PBK on MINIRAM for less than one second (see section 3.9) and the LCD display should then indicate "PA". The printer will then print out the stored data block.

10.4 Printout of Zero or of Measurement Data

Interconnect MINIRAM and printer as indicated before and switch on printer power. Press OFF on the MINIRAM. Press either ZERO or MEAS on MINIRAM (depending on which information should be printed out). Printer will print out zero data approximately 72 seconds after pressing ZERO on MINIRAM (see figure 2). The first line of measurement data will be printed out approximately 126 seconds after pressing MEAS, and thereafter every 100 seconds (each line contains ten 10-second measurements). The printer power can be turned off any time during the measurement cycle, and turned on again during a cycle to resume printing. The data line numbers (see figure 3) will then be the current ones as sequenced by the MINIRAM whose output is independent of the operations of the printer.

11.0 DIGITAL OUTPUT CONNECTIONS

A digital printer (other than MIE model DP-2-80C), data logger (MIE PDL-10), or modem may be coupled to the MINIRAM. The data output is in the form of 20 mA current loop, 300 baud (110 or 600 baud by alternate programming) asynchronous ASCII characters. The output load should be less than 50 ohms.

Figure 4 is a diagram showing the connections and components required for a 20 mA loop interconnection to a printer. A similar diagram is shown for standard RS232 interfacing with a printer (see Figure 5). These connections do not apply when using the DP-2-80C printer.

The MINIRAM does not send parity information, but does provide an ASCII check sum which is the sum of all ASCII characters, to insure data integrity.

To use the check sum the host computer must add the ASCII value of all digits, spaces, carriage returns, and line feeds except for the first two carriage returns and line feeds which are sent immediately after pressing the PBK switch. The last eight bits of this sum should then be expressed as a decimal number (0-255) and should agree with the decimal value of the MINIRAM check sum.

12.0 ROUTINE MAINTENANCE

When the MINIRAM is not being operated it should be placed in its carrying case which should then be closed. This will minimize the amount of particle contamination of the inner surfaces of the sensing chamber.

After prolonged operation within, and exposure to particulate-laden air, the interior walls and the two glass windows of the sensing chamber may have become contaminated with particles. Although repeated updating of the zero reference following the procedure of section 3.10 will correct errors resulting from such particle accumulations, eventually this contamination could affect the accuracy of the measurements as a result of excessive spurious scattering, and significant attenuation to the radiation passing through the glass windows of the sensing chamber.

An indication of excessive chamber contamination is provided by the zero level reading (section 3.10), which should not exceed 3 mg/m^3, approximately.

In order to clean a soiled sensing chamber remove that chamber as described in section 7.0 and wash it with soap and water, rinsing thoroughly to remove any residues from the glass windows and interior of the chamber. Do not use solvents of any type. Do not rub interior surfaces of the chamber (coated version). Allow the sensing chamber to dry completely and re-insert into the MINIRAM as indicated in section 6.0.

13.0 PRECAUTIONS AND OPERATING POSITIONS

The interior of the MINIRAM sensing chamber should not be exposed to fluctuations of intense light; flashes of sunlight or bright daylight especially, are to be avoided. Such excessive variable illumination of the scattering detector can result in significant measurement errors that may persist over several 10-second display cycles. In order to operate the MINIRAM under those conditions it is advisable to use the Sunshield accessory (MIE model PDM-SNS, see section 16.2).

Another potential source of error is the presence of reflecting surfaces in close proximity to the sensing chamber openings. Such objects should be kept at least 2 cm (3/4 inch) from the chamber openings.

The removable sensing chamber should not be used as a carrying handle, especially not while operating the MINIRAM; holding this chamber may affect the measurements.

When using the MINIRAM for personal monitoring it should be positioned vertically, i.e., with the display/control panel facing upwards, by either clipping the MINIRAM to the belt, shoulder strap, etc.

In general, an approximate vertical position is to be preferred for any long-term monitoring purposes, in that this position minimizes potential particle deposition within the removable sensing chamber.

Other monitoring positions are:

a) horizontal, resting on belt clip

b) hand held (while ensuring that hand and fingers are away from the openings of sensing chamber)

c) Using the optional MINIRAM table stand

d) Wall mounted using belt clip, or the four battery pack attachment screws on the back of the MINIRAM.

14.0 INTRINSIC SAFETY

The MINIRAM has been designed to satisfy the requirements for intrinsically safe operation in methane-air mixtures. The sealed battery pack incorporates a current-limiting resistor that limits the battery short circuit current to less than 14A. MSHA 2G-3532-0 approval has been granted to the PDM-3.

15.0 SPECIFICATIONS

- Measurement ranges: 0.01 to 10 mg/m^3 and 0.1 to 100 mg/m^3
- Precision and stability (for 10 sec. readings)* : $\pm$ 0.03 mg/m^3 (2-sigma)
- Precision and stability of time-averaged measurements*:
  $\pm$ 0.02 mg/m^3 (for 1 minute averaging)
  $\pm$ 0.006 mg/m^3 (for 10 minute averaging)
  $\pm$ 0.003 mg/m^3 (for 1 hour averaging)
  $\pm$ 0.001 mg/m^3 (for 8 hour averaging)
- Temperature coefficient: 0.005 mg/m^3 per °C (typical)
- Readout resolution: 0.02 mg/m^3 or 0.1 mg/m^3 depending on automatically selected range (3 digit LCD)
- Digital readout updating time: 10 seconds
- Analog output time constant: 0.2 seconds
- Total measurement period: 8 1/3 hours, or indefinite 8 1/3 hour cycles
- Particle size range of maximum response: 0.1 to 10 µm in diameter
- Measurement display: normally 10-second real time measurement; or momentarily: time-weighted average, or 8-hour equivalent shift average, or elapsed sample time (in minutes), or zero value, or identification number, or programmable code
- Data storage: seven concentration averages, sampling periods in minutes (3 significant figure resolution), off time (10 minute resolution), identification number, zero value, programmable code, and check sum
- Real time outputs: analog (0 to 1.5V full scale), and digital ASCII

---

* At constant temperature (typ. 25°C)

- Memory playback: either by own LCD display, or by 110, 300 or 600 baud, ASCII digital output (20 mA current loop, or RS232 terminals may be connected with appropriate interface)
- Nominal battery voltage: 7.5V
- Average battery current drain: 40 mA
- Continuous operating time with full battery charge: 10 hours, approximately
- Operating temperature: 0° to 50°C (32 to 120°F) Storage: -20 to 60°C
- Outside dimensions: main body: 10 x 10 x 4 cm (4 x 4 x 2 inches); sensing chamber cover: 7.7 x 3.8 x 1.5 cm (3 x 1.5 x 0.6 inches)
- Weight: 0.45 kg. (16 oz.)

16.0 STANDARD ACCESSORIES

Accessories provided with each MINIRAM are detailed in the following subsections.

16.1 Battery Charger

The battery charger (MIE model PDM-1-157-1) serves the following functions: recharge or maintain the charge of the nickel-cadmium batteries within the MINIRAM, permit continuous a.c. power line operation, and provide power for the operation of pump of the optional MIE model PDM-1FZ Zero Check Module (see section 17.2). The charger cannot be used to power the MINIRAM without its batteries, however, it can be used to charge a separate or spare battery pack (MIE model PDM-1-101-1, see section 7.0). The output of the MINIRAM battery charger is a low voltage a.c. which is converted to d.c. within the MINIRAM.

The standard battery charger is designed for a 120V/60 Hz input, however, it can be obtained for 220V/50 Hz if so specified.

16.2 Sunshield (MIE model PDM-SNS)

The sunshield accessory serves to protect the MINIRAM sensing elements from excessive ambient light fluctuations (see section 13.0). It should be used whenever the MINIRAM is to be operated outdoors or under fluctuating bright light illumination. It is also advisable to use the sunshield to prevent loose clothing or other objects from touching or entering the open sensing chamber. The use of the sunshield causes only a slight retardation of the air exchange rate between the outside and inside of the sensing chamber, an effect that is negligible except when using the analog output in order to follow rapid fluctuations of particle concentration. The sunshield attaches by its two support tabs to the body of the MINIRAM. The sunshield is included with units ordered after April 1987. It is advisable to use the MINIRAM with the sun shield attached at all times, if possible.

16.3 Z-Bag™ Calibrator

The Z-Bag™ is a convenient kit for zeroing the MINIRAM in the field. It provides a clean-air environment inside a plastic bag into which the MINIRAM is placed for zeroing. The Z-Bag kit consists of a one-way flow rubber bulb for manual air pumping, a filter cartridge, a zippered plastic container, and connecting hardware.

To use Z-Bag for zeroing MINIRAM proceed as follows:

1. Remove rubber bulb filter assembly from Z-Bag. Place Z-Bag on flat surface with red flow fitting facing up. Flatten bag. Remove small plastic cap from flow fitting on bag.
2. Insert ribbed elbow connector (attached to filter cartridge) into red flow fitting of plastic bag, until connector is flush with bottom of red flow fitting.
3. MINIRAM should be in its OFF condition (observe display). If display is blanked, or if MINIRAM is in the MEAS mode, key OFF.
4. Open Z-Bag and place MINIRAM inside, approximately at its center.
5. Key ZERO through the open end of the Z-Bag. Immediately zip closed the Z-Bag and begin to pump hand bulb.
6. Z-Bag should inflate as hand pumping continues, up to a height of about five inches (12 cm). Continue pumping gently to maintain bag interior pressure, until the MINIRAM displays OFF again.
7. Unzip Z-Bag and remove MINIRAM. MINIRAM is now ready for monitoring.
8. Place rubber bulb/filter assembly inside Z-Bag, and plug small plastic cap into flow fitting to close it. Zip close while flattening Z-Bag to store it to ensure cleanliness of the bag interior.

CAUTION: Do not expose Z-Bag to sub-zero freezing temperatures as the plastic zippered bag may crack.

16.4 Carrying Case (MIE model PDM-HC)

The PDM-HC is a convenient and compact hard shell carrying case designed to house a MINIRAM and a battery charger. The inside is foam padded for full protection. The outside dimensions of the PDM-HC-1 are: length - 9 1/2 inches, depth - 7 inches, and height - 3 1/2 inches.

16.5 Other Standard Accessories

Other accessories supplied with the MINIRAM are:

- Output connectors (can be used for the analog, and/or the digital output jacks)
- Hexagonal wrenches for flow accessories
- Instruction Manual

17.0 OPTIONAL ACCESSORIES

Several optional accessories are available from MIE for the MINIRAM, these are described in the following subsections.

17.1 Flow Adapter (MIE model PDM-1F)

The Flow Adapter when used in conjunction with the MINIRAM and any pump or external flow system, allows a sample to be drawn through the instrument sensing chamber. A personal monitoring pump at flow rates of 2 l/minute or less may be used.

To attach the Flow Adapter to the MINIRAM loosen the two thumbscrews and pull the front sealing plate forward. Slide the Adapter over the MINIRAM sensing chamber as illustrated above; secure the Adapter to the MINIRAM by tightening the two allen-head screws through the hold down tabs. Tighten the thumbscrews to seal the two end plates to the MINIRAM sensing chamber.

Typically, this accessory would be used when extracting samples from aerosol chambers, detecting leaks from pressurized ducting, or for isokinetic sampling using probes.

17.2 Zero Check Module (MIE model PDM-1FZ)

The Zero Check Module can be used to zero the MINIRAM when a clean air environment is not available. The Zero Check Module should be used when concentrations in the range above 0.5 mg/m^3 are to be measured (see section 3.10).

In addition, this accessory can be used to draw a sample stream through the MINIRAM sensing chamber (in lieu of a separate pump) by disconnecting the small tube at the sensing chamber inlet fitting.

This accessory consists of a pump, filter and the necessary tubing to circulate clean filtered air through the MINIRAM. The pump may be powered by the MINIRAM battery charger (or a 5-10 VDC power supply). The battery within the MINIRAM cannot be used to operate the Zero Check Module.

To zero the MINIRAM, first attach the Zero Check Module following the same procedure described for attaching the basic Flow Adapter (see section 17.1). Connect the battery charger to the Zero Check Module and to an A.C. source. Allow at least one minute of operation to purge the sample chamber with clean air. Press the ZERO button on the MINIRAM and continue operating the Zero Check Module until the final average zero reading is displayed (see section 3.10).

NOTES:
When using any of the optional accessories that are attached on and around the sensing chamber (models PDM-1F, -1FZ, and -SNS) to perform measurements at concentrations below 0.5 mg/m^3, it is advisable to zero check the MINIRAM with the accessory in place, making sure that its mounting and sealing screws are properly tightened.

Use an external pump or pressurized air source (well filtered) to drive clean air through the sensing chamber to zero the MINIRAM with any of those accessories (except in the case of the Zero Check Module). To zero check the MINIRAM when using the Sunshield place instrument with the attached sunshield in a clean air environment (see Section 3.10), or using the Z-Bag (see Section 16.3).

17.3 Personal Sampler Adapter (MIE model PDM-2FS)

This accessory, when used with the MINIRAM and a personal sampling pump, permits active sampling of respirable (cyclone preselected) particles through the instrument sensing chamber and collection on a filter. The aerosol sample is drawn through a 10 mm nylon cyclone (with a 50% cut point at 3.5 µm when operated at 2 l/minute), through the sensing chamber of the MINIRAM, and then collected on a filter located in the cassette/filter holder for subsequent gravimetric or other analysis.

The model PDM-2FS is compatible with a Millipore 37mm disk filter holder no. M000 037 AO.

To attach the Personal Sampler Adapter to the MINIRAM, follow the same procedure as described for attaching the basic Flow Adapter (see Section 17.1). Connect a length of tubing from the exhaust fitting on the filter holder to a personal sampling pump (not provided with the Adapter).

The use of the Personal Sampler Adapter permits concurrent MINIRAM readings and filter collection to facilitate calibration of the MINIRAM for a specific aerosol, or to determine both concentration and chemical composition of the aerosol.

17.4 Shoulder Strap (MIE model PDM-SS)

The PDM-SS is a leather strap, worn over the shoulder and across the chest, which attaches to the wearer's belt in front and back. The MINIRAM clipped to the mounting loop in the upper chest area allows exposure measurements close to the breathing zone while still permitting comfort and freedom of movement.

17.5 Table Stand (MIE model PDM-TS)

The table stand accessory provides a convenient mounting support for the MINIRAM when it is used for area monitoring. The MINIRAM is simply clipped onto the table stand which holds it in a convenient position.

17.6 Dot Matrix Digital Printer (MIE model DP-2-80C)

This printer is supplied with a special interconnecting cable which is plugged into the digital output jack of the MINIRAM. The DP-2-80C is normally provided for 120V/60 Hz operation. Operation with 220V/50 Hz line can be provided upon customer request.

The use of the DP-2-80C in combination with the MINIRAM is described in Section 10.0. A separate instruction manual for the printer is supplied with that unit.

17.7 Reference Scatterer (MIE model PDM-RS)

The PDM-RS is a specially modified sensing chamber that includes a diffusing optical filter mounted within the sensing region of the MINIRAM. It is designed to scatter a controlled amount of light from the infrared source to the detector, providing a stable and repeatable reading on the MINIRAM display. The reference scatterer is inserted into the MINIRAM instead of the normal sensing chamber, and the readings are obtained operating in the MEAS mode. If the PDM-RS is ordered from MIE concurrently with a MINIRAM the reference scatterer will be factory marked with the calibration reading to be obtained when inserted into that particular MINIRAM whose serial number will also be shown on the PDM-RS tag. The readings displayed by the MINIRAM when inserting the PDM-RS should be within approximately ±5% of the value marked on that reference scatterer.* The readings obtained with the reference scatterer may show a small warm-up drift (i.e. gradual change) during the initial 5 to 10 minutes after pressing MEAS.

If the reference scatterer is ordered separately from the MINIRAM, the user will then determine the calibration reading obtained on the MINIRAM and mark it (together with the MINIRAM serial number) on the PDM-RS tag.

Because of small differences in the optical configuration of each reference scatterer, the readings obtained with a given reference scatterer are unique to a given MINIRAM. The response to a given population of airborne particles, however, is the same for all factory calibrated MINIRAMs, within approximately ± 5%.

17.8 Cable (MIE model PDM-CB)

The PDM-CB cable is used to connect the digital output of the MINIRAM with the input of the 80 column digital printer MIE model DP-2-80C.

---

* Prior to the use of the reference scatterer the MINIRAM should be zeroed with a clean standard sensing chamber as described in Section 3.10.

17.9 Portable Data Logger (MIE model PDL-10)

This data logger can be used to record, average, peak detect, etc. concentration levels measured by the PDM-3. A separate instruction manual is provided for the PDL-10.

18.0 DOWNLOADING FROM MIE MODELS PDM-3 OR PDL-10 TO IBM COMPATIBLE COMPUTER USING WINDOWS

1. From PDM-3: Using cable PDM-CB plug the single end into the PDM-3, Digital output port. Plug the 25 pin connector into the serial port of your computer. If your serial port has a 9-pin input connector you will need a 25-pin adapter.

- At your computer, under PROGRAM MANAGER, open ACCESSORIES
- Open TERMINAL
- Under SETTINGS MENU, open COMMUNICATIONS

Communications Set up:

- Baud Rate: 300
- Data Bits: 7
- Stop Bits: 1
- Parity: none
- Flow control: Xon/Xoff
- Identify the Com port you are using (click ok)

- Under TRANSFERS menu, open RECEIVE TEXT FILE
- Give the file a name with a .txt extenstion (click ok)
- To play back the stored averages, press down PBK on the MINIRAM for a brief second. The data will begin to appear on the computer screen.
- To download the 10 second averages as they appear on the MINIRAM display, press MEAS on the MINIRAM and after about 30 seconds the 10 seconds averages will begin to appear on the computer screen.

1. From PDL-10: Insert the 5-pin connector of the cable PDL-CB into the receptacle of the datalogger, and, the 25-pin connector to the serial port of the computer. If you use the male side of the 25-pin connector, set switch on 1, if you use the female side, set the switch on 2. If your computer has a 9-pin serial input you will need a serial port adapter to go from 25-pin to 9-pin.

Under PROGRAM MANAGER:

- Open ACCESSORIES
- Open TERMINAL
- Under SETTINGS MENU, open COMMUNICATIONS

Communications Set up:

- Com port 1
- Baud rate - You can use any baud rate, just make sure the PDL-10 baud rate setting, and the Communications settings are the same. To change or check the baud rate in the Datalogger, go to PROGRAM, then DATA, and press NEXT until the baud rate settings menu appears.
- Data Bits: 8
- Stop Bits: 1
- Parity: none
- Flow control: Xon/Xoff

- Under TRANSFERS menu, open RECEIVE TEXT FILE. Give name with . txt extension

Go to the PDL-10 Datalogger and on the keypad press:

- output
- enter
- enter

The report will now transfer and come up on the computer screen.

TROUBLESHOOTING if data does not transfer to the screen:

1. Check the switch of the plug
2. Check the baud rate
3. Check the Com port

Average Zero Value

```
00.62  00.62  00.66  00.57  00.61
```

Zero Check

```
0000  02.05  02.05  02.04  02.05  02.04
 02.05  02.04  02.05  02.04  02.05
0001  02.04  02.05  02.05  02.05  02.04
 02.05  02.05  02.05  02.04  02.05
0002  02.05  02.04  02.05  02.05  02.04
 02.05  02.05  02.05  02.05  02.04
```

Line Number

Continuous 10-Second Printout of Concentration (in mg/m^3)

```
GCA TECHNOLOGY DIV.
BEDFORD MA USA
617-275-5444
PDM-2 LISTING
SHIFT   ON    OFF   CONC
  #    MINS MIN/10 MG/M3
0007  0004  0000  02.04
0006  0012  0000  01.61
0005  0006  0000  01.61
0004  0004  0000  00.01
0003  0006  0000  00.00
0002  0000  0000  00.02
0001  0000  0001  00.00
I= 0003 F= 0012 Z= 00.61
0057
```

ID Number

Playback of Stored Data

Check Sum

Programmable Selection Code

Zero Value

Figure 3. Typical MINIRAM Model PDM-3 Digital Printout Format

HNu Manual

MODEL PI-101
TRACE GAS ANALYZER

HNU Systems, Inc.
160 Charlemont Street
Newton, MA 02161 USA
Telephone: 617-964-6690
Telephone (outside USA): 617-558-0103
Telex: 6817153
Fax: 617-558-0056

© Copyright 1985
HNU Systems, Inc.
All Rights Reserved
Published in USA
Part Number: 81-MN104462

TABLE OF CONTENTS

SECTION		PAGE
1	GENERAL INFORMATION	1-1
	1.1 Introduction	1-1
	1.2 Equipment Description	1-1
2	OPERATION	2-1
	2.1 Introduction/Unpacking	2-1
	2.2 Controls and Indicators	2-1
	2.3 Operating Procedures	2-1
	2.4 Battery Charge	2-8
3	CALIBRATION	
	3.1 Introduction	3-1
	3.2 Analyzed Gas Cylinder	3-1
	3.3 Probe	3-3
	3.4 Procedure	3-3
	3.5 Calibration Checking	3-4
4	FUNCTIONAL DESCRIPTION	4-1
	4.1 Principle of Operation	4-1
	4.2 Ionization Potentials	4-1
	4.3 Ionization Sensitivity	4-1
	4.4 Calibrated Probes and Selectivity	4-3
	4.5 10.2 eV Probe	4-3
	4.6 9.5 eV Probe	4-9
	4.7 11.7 eV Probe	4-9
	4.8 Equipment Description	4-9
5	MAINTENANCE	5-1
	5.1 Introduction	5-1
	5.2 UV Lamp and Ion Chamber Cleaning	5-1
	5.3 Lamp Replacement	5-3
	5.4 Lamp Size Change	5-4
	5.5 Probe Disassembly/Assembly	5-4
	5.6 Readout Disassembly/Assembly	5-8

TABLE OF CONTENTS cont.

SECTION		PAGE
6	TROUBLESHOOTING	6-1
	6.1 Introduction	
7	PARTS LISTS	7-1
	7.1 Introduction	
8	APPENDIX	8-1
	8.1 Static Calibration	8-2
	8.2 Calibration Checking with Isobutylene	8-5
	8.3 Calibration with Alternate Gas	8-7
	8.4 Uncalibrated Operation	8-9
	8.5 Ionization Tables	8-12
	8.7 Warranty	8-26
	8.8 Publications List	8-27

LIST OF ILLUSTRATIONS

FIGURE No.	TITLE	PAGE
1-1	Trace Gas Analyzer, Operating Condition	1-2
1-2	Response for the Various Ultraviolet Lamps	1-4
1-3	Probe Storage, Instrument Cover	1-5
1-4	Trace Gas Analyzer, Stored Condition	1-6
2-1	Controls and Indicators	2-2
3-1	Calibration Test Set-up	3-5
3-2	Typical Calibration Curves	3-6
4-1	Detection Process	4-2
4-2	Probe Application Examples	4-6
4-3	Block Diagram Component Location	4-12
4-4	Block Diagram, Electrical Connections	4-13
4-5	Schematic, PI-101 Audible Alarm	4-14
4-6	Schematic Diagram, Model PI 101	4-15
5-1	Probe Assembly	5-6
5-2	Lamp Housing Assembly	5-7
5-3	Readout Assembly	5-9
6-1	Power Supply PCB	6-7
7-1	Parts Location, Probe Assembly	7-6
7-2	Parts Location, Readout Assembly	7-7
7-3	Parts Location, Other Items	7-8
8-1	Calibration Checking Set-up	8-6
8-2	Typical Output Curves, Analyzer with 10.2 eV Lamp, Calibrated for Benzene	8-10
8-10	Recorder Mounting	8-11

LIST OF TABLES

TABLE No.	TITLE	PAGE
1-1	Specification Data	1-7
1-2	Equipment Size and Weight	1-9
2-1	Controls	2-3
2-2	Indicators and Displays	2-5
4-1	Relative Photoionization Sensitivities for Gases	4-4
4-2	Typical Applications of Interchangeable Probes	4-5
4-3	Probe Application Examples	4-8
6-1	Troubleshooting Data	6-2
6-2	Pad Data, Power Supply PCB	6-6
6-3	Pin Data, Amplifier PCB P2/J2	6-8
6-4	Pin Data, Probe Cable, P3/J3	6-9
6-5	Pin Data, Alarm Cable, P6/J6	6-10
7-1	Replacement Parts List	7-2
7-2	Replacement Parts List	7-3
7-3	Replacement Parts List	7-4
7-4	Parts List Accessories	7-5
7-4	Parts List, Accessories	7-5
8-1 thru 8-13	Ionization Potentials	8-13
8-14	Relative Photoionization Sensitivities of Various Gases to a 10.2 eV Lamp	8-21
8-15	Relative Photoionization Sensitivities of Various Gases to a 11.7 eV Lamp	8-24
8-16	Relative Photoionization Sensitivities of Various Gases to a 9.5 eV Lamp	8-25

WARNINGS

The following warnings appear in this manual and are repeated here for emphasis.

Do not look at the light source from closer than 6 inches with unprotected eyes. Observe only briefly. Continued exposure to ultraviolet energy generated by the light source can be harmful to eyesight.

The instrument measures gases in the vicinity of the operator and a high reading when measuring toxic or explosive gases should be cause for immediate action for safety.

Extreme care must be taken in the handling of gas cylinders. Contents are under high pressure. In some cases, the contents may be hazardous. Many gas suppliers will provide data sheets for the mixtures upon request.

Never open the valve on a gas container without a regulator attached.

Turn the function switch on the control panel to the OFF position before disassembly. Otherwise, high voltages of 1200 V DC, will be present.

Use great care when operating the analyzer with the readout assembly outside its case due to the presence of 1200 V DC.

Be very careful to note the toxic levels and the Lower Explosive Limits for personal safety. The PI 101 is a nondestructive analyzer and must be used in a hood when calibrating with toxic or hazardous materials.

The PI 101 is suitable for uses in Class I Division II ABCD areas except when using charger or when using recorder.

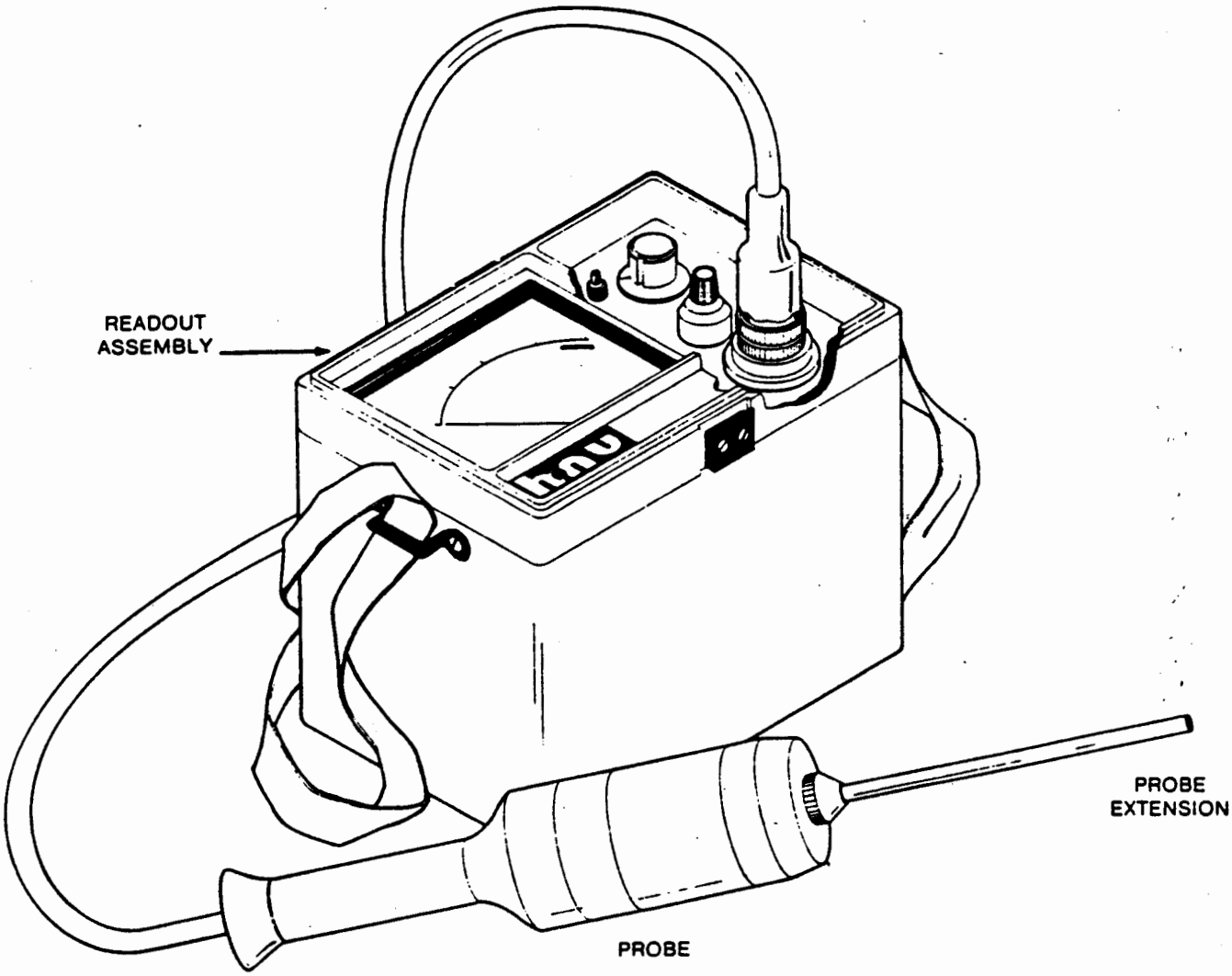

FIGURE 1-1
TRACE GAS ANALYZER
OPERATING CONDITION

SECTION 1

GENERAL INFORMATION

1.1 INTRODUCTION

This manual describes the operation, maintenance and parts list for the Trace Gas Analyzer, Model PI 101, HNU Systems Inc.

1.2 EQUIPMENT DESCRIPTION

The Trace Gas Analyzer (see Figure 1-1), is a portable instrument used to detect, measure, and provide a direct reading of the concentration of a variety of trace gases in many industrial or plant atmospheres. The analyzer employs the principle of photoionization. This process involves the absorption of ultra-violet light (a photon) by a gas molecule leading to ionization:

$$RH + hv \rightarrow RH^+ + e^-$$

in which

RH = Trace gas
hv = Photon with an energy level equal to or greater than the ionization potential of RH.

The sensor consists of a sealed ultraviolet (UV) light source that emits photons with an energy level high enough to ionize many trace species, particularly organics, but not high enough to ionize the major components of air, O_2, N_2, CO, CO_2 or H_2O.

A chamber exposed to the light source contains a pair of electrodes, one a bias electrode and the second a collector electrode. When a positive potential is applied to the bias electode a field is created in the chamber. Ions formed by the absorption of photons are driven to the collector electrode. The current produced is then measured and the corresponding concentration displayed on a meter directly in parts per million (ppm).

To minimize absorption or decomposition of sample gases, a rapid flow of sample gas is maintained thru the ion chamber, which is small, made of inert material and located at the sampling point.

The analyzer consists of a probe, a readout assembly, and a battery charger. The probe contains the sensing and amplifying circuitry; the readout assembly contains the meter, controls, power supply and rechargeable battery. The analyzer will operate from the battery for more than 10 hours or continuously when connected to the battery charger.

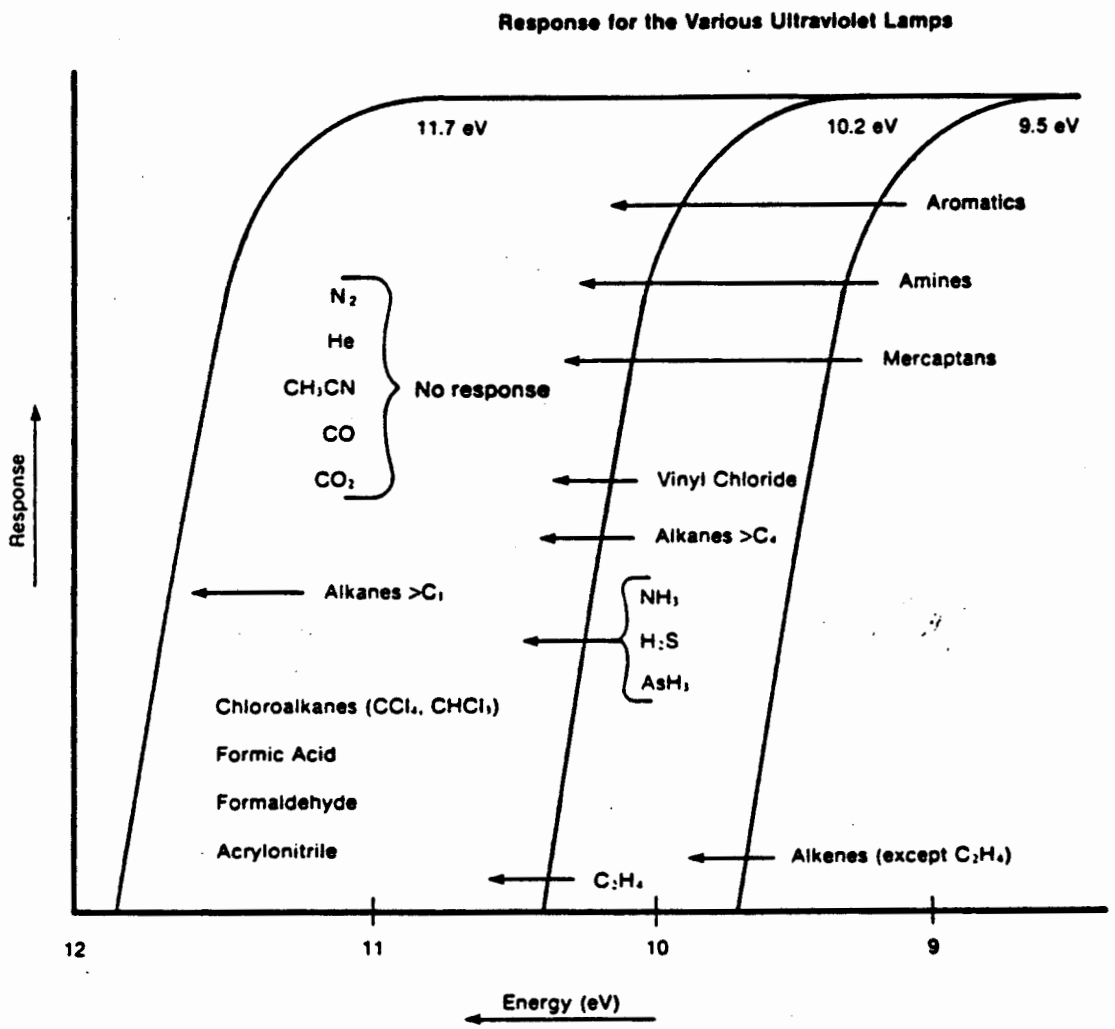

FIGURE 1-2
RESPONSE TO VARIOUS COMPOUNDS
FOR EACH ULTRAVIOLET LAMP

The PI 101 is designed for use with interchangeable probes with lamps of different energies. The analyzer is ready for use simply by connecting the probe to the readout assembly, setting the proper SPAN pot value, and then zeroing the unit. Specific data is given in the calibration memo accompanying each probe.

The standard probe uses a 10.2 eV lamp. Two optional probes use 9.5 and 11.7 eV lamps. Lamps of different eV ratings, ion chamber and amplifiers are not interchangeable between probes.

Many applications make use of the principle that some compounds respond to the more energetic lamps and not to others. Figure 1-2 shows the responses for the analyzer with each of the three lamps. Literature explaining several such applications is available from HNU Systems Inc.

An optional audible alarm is available giving an 85 decibel signal when a set concentration is exceeded. The alarm setting is variable and can be set from 0 to 100% of full scale of the meter reading. Power for the alarm is provided by the battery and does not significantly affect the rated use time of the analyzer. The alarm is non-latching and is set by a screw adjustment, preventing inadvertent changes.

When in the stored condition, the probe is contained in the instrument cover (see Figure 1-3) which attaches to the readout assembly to form a single unit (see Figure 1-4).

An optional recorder is available that can be directly attached to the readout assembly. It uses impact paper with a 2" wide chart and a speed of 2"/hour. The recorder is powered by the instrument battery and provides hard copy of the data. The analyzer will operate for approximately 4 hours with the recorder attached. Mounting information and illustration is given in Section 8.

Specification data on the analyzer is given in Table 1-1. Physical characteristics of the equipment are given in Table 1-2.

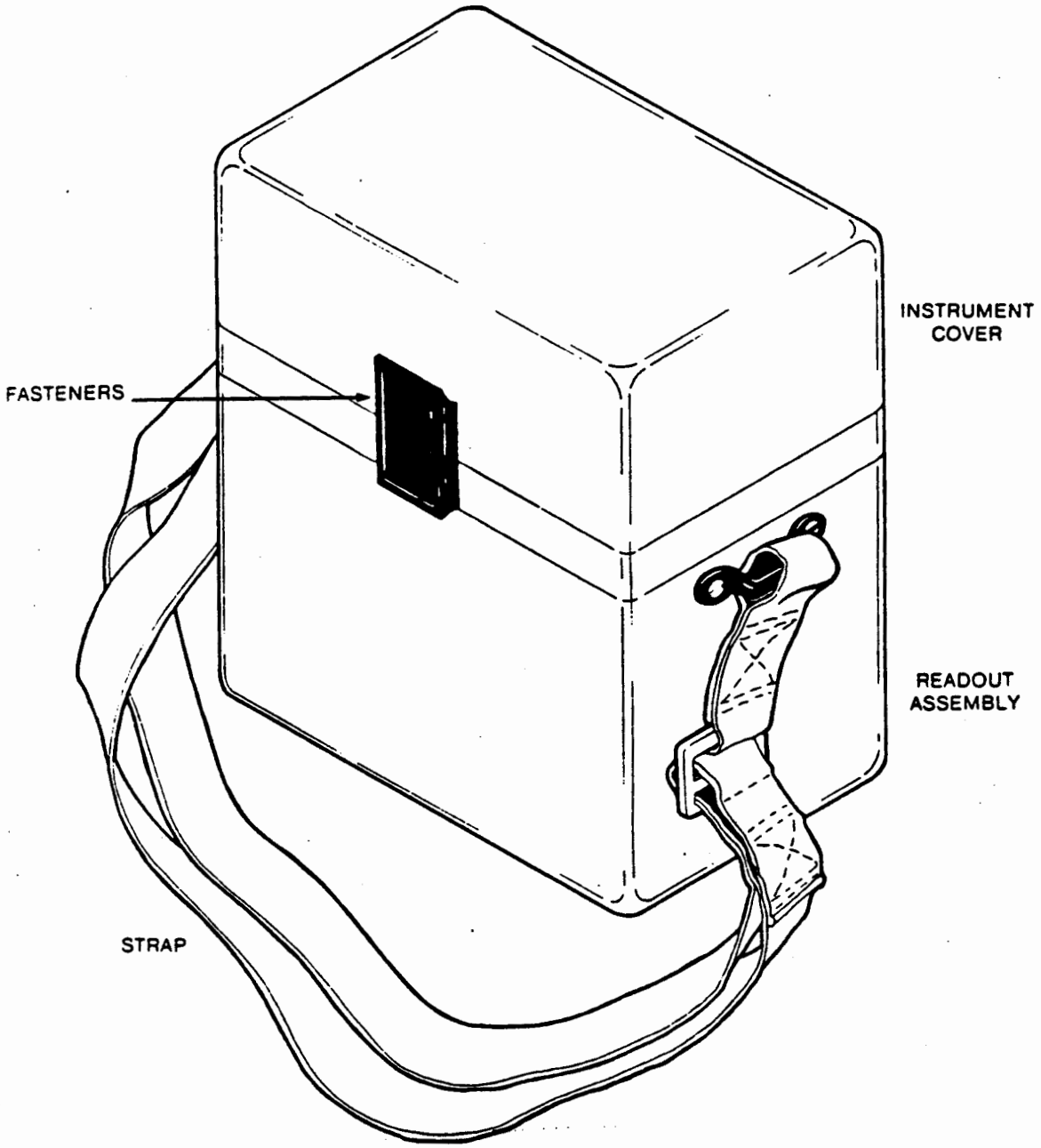

FIGURE 1-4
TRACE GAS ANALYZER
STORED CONDITION

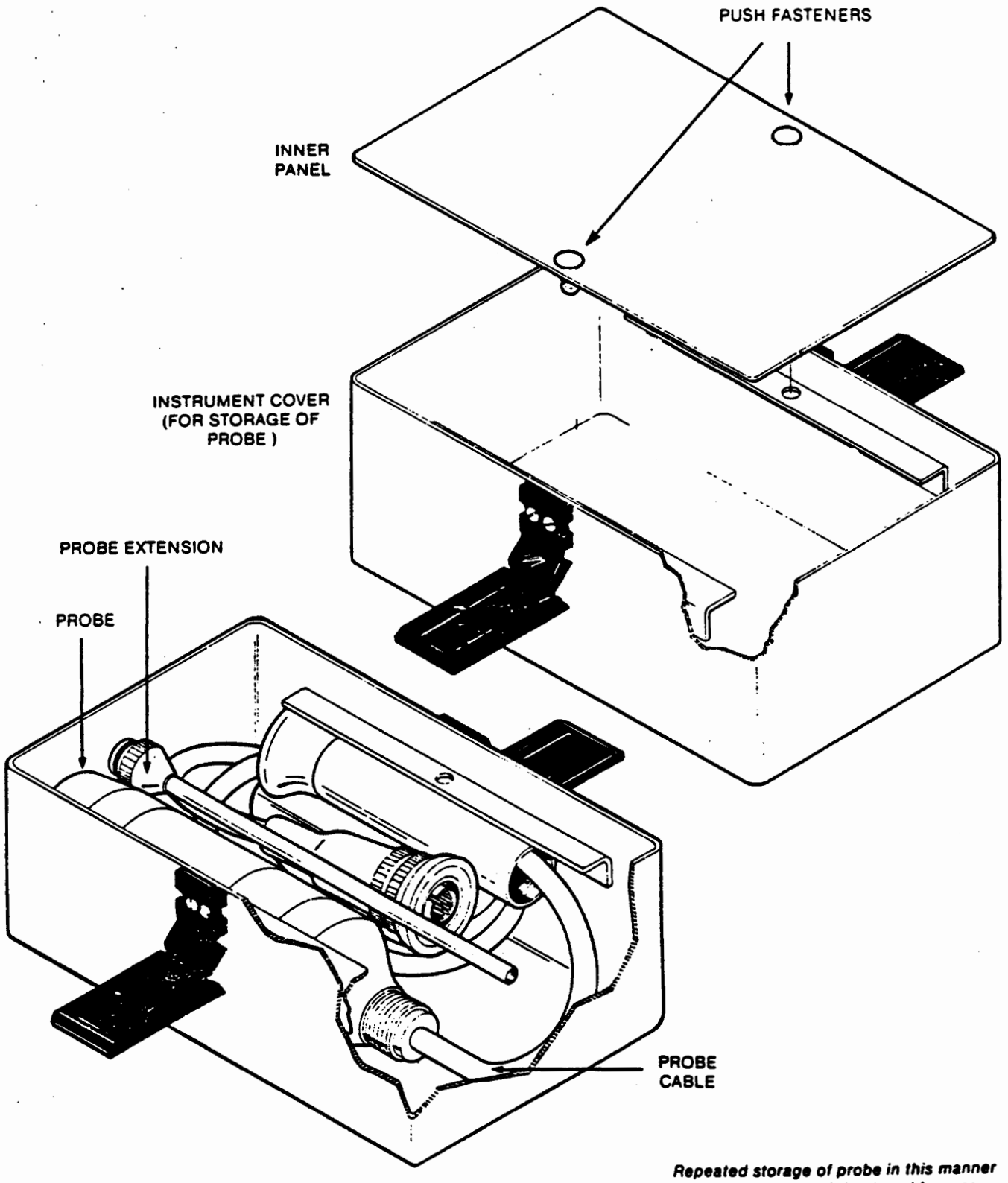

Repeated storage of probe in this manner is not recommended due to cable wear. Instrument cover may also be used for storing battery charger.

FIGURE 1-3
PROBE STORAGE
INSTRUMENT COVER

TABLE 1-1

SPECIFICATION DATA

a. DESIGN FEATURES

Range settings	0 to 20, 200, 2000 ppm (other ranges available on request)
Lamp rating	10.2 eV standard, 9.5 or 11.7 eV optional
Audible alarm, low or high limit (optional)	85 db at 3'

b. CHARACTERISTICS (see NOTE)

Detection Range *	0.1 to 2000 ppm (parts per million by volume)
Minimum Detection Level *	0.1 ppm
Maximum Sensitivity *	0 to 20 ppm FSD at SPAN = 9.8 (full scale deflection) 0 to 2 ppm FSD at SPAN = 0.0
Repeatability *	+/- 1% of FSD
Linear Range *	0.1 to 400 ppm
Useful Range *	0.1 to 2000 ppm
Response Time	Less than 5 seconds to 90% of FSD
Ambient Humidity	up to 90% RH (relative humidity)
Operating Temperature, Ambient	-10 to 40 degrees C.
Operating Time on Battery, continuous use, without HNU recorder	Approximately 10 hours; at lower temperatures time is reduced due to effect of cold temperature on battery.
with HNU recorder (optional)	Approximately one half of normal time

TABLE 1-1 cont.

Recharge time from full discharge	Full recharge - 12 to 14 hours
Recharge current	Max 0.4 amps at 15 V DC
Battery Charger Power	120 V AC, single phase, 50-60 cycle, 1.5 Amps

NOTE: * When equipped with 10.2 eV Probe with SPAN set at 9.8 and measuring benzene. Values will vary for other compounds and conditions.

TABLE 1-2

EQUIPMENT SIZE & WEIGHT

Quantity	Name	Overall dimensions cm (inches)	Weight, kg (lbs.)	Volume, cm3 (cu. ft.)
1	Trace Gas Analyzer (stored condition)	21W x 13D x 24H (8 1/4 x 5 3/16 x 9 1/2)	3.8 (8.2)	6552 (0.23)
	Probe Assembly	6.3 Diam x 28.5L (2 1/2 x 11 1/4)	0.55 (1.2)	564 (0.02)
	Readout Assembly	21W x 13D x 16.5H (8 1/4 x 5 3/16 x 6 1/2)	3.2 (7.0)	4504 (0.16)
1	Battery Charger with cord	10W x 12.7D x 9L (4 x 5 x 3 1/2)	0.4 (0.9)	1143 (0.04)

SECTION 2

OPERATION

2.1 INTRODUCTION/UNPACKING

Unpack the instrument carefully. The carton will contain the housing, straps, battery charger, additional probes, regulator and cylinder if ordered, spare parts, supplies and a manual. Be sure all items are removed before discarding the carton.

Attached to the instrument is a warranty card which should be filled out completely and returned to HNU Systems.

2.2 CONTROLS AND INDICATORS

The controls and indicators are located on the front panel of the readout assembly (see Figure 2-1) and are listed and described in Tables 2-1 and 2-2.

2.3 OPERATING PROCEDURES

The following procedures are to be used in operating the analyzer:

a. Unclamp the cover from the main readout assembly.

b. Remove the inner lid from the cover by pulling out the two fasteners.

c. Remove the probe, handle and cable from the cover. Attach the handle to the front part of the probe.

d. Connect the probe cable plug to the 12 pin keyed socket on the readout assembly panel. Carefully match the alignment slot in the plug to the key in the connector. Screw down the probe connector until a distinct snap and lock is felt.

e. Screw the probe extension into the probe end cap. The probe may be used without the extension if desired.

f. Set the SPAN control for the probe being used (10.2, 9.5, or 11.7 eV) as specified by the initial factory calibration or by subsequent calibrations.

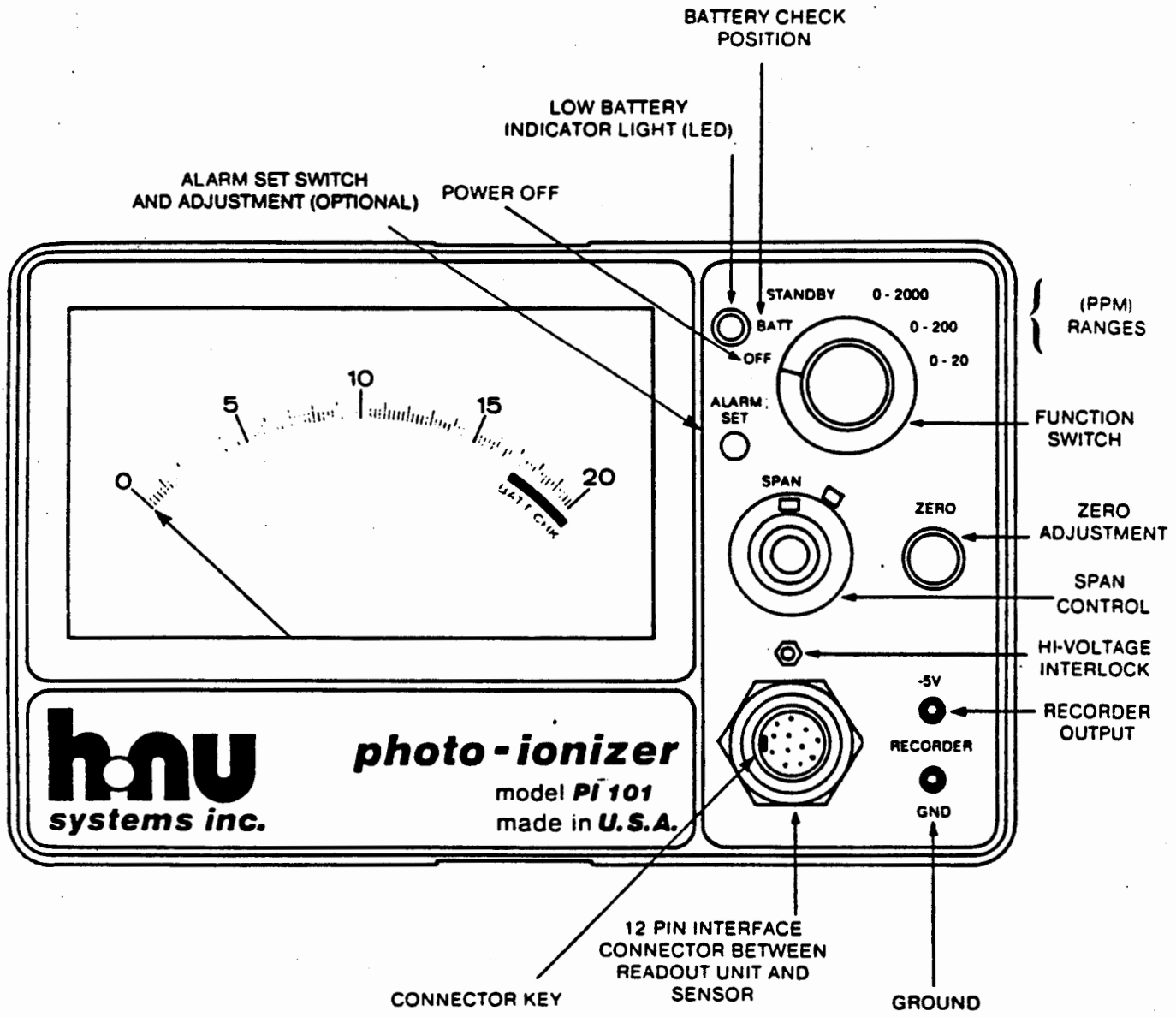

FIGURE 2-1
CONTROLS AND INDICATORS

TABLE 2-1

CONTROLS

Name	Position	Function
Function Switch	---	Controls the operation of the analyzer
	OFF	All operations OFF
	BATT (battery check)	Checks the condition of the battery. If the meter needle is in the green arc, the battery is charged. If not the battery should be recharged. Charging can be done in any position, best in OFF; see directions on charger.
	STANDBY	All electronics ON, ultraviolet (UV) light source OFF. This position conserves power and extends battery life. This position is used to set the analyzer zero position. (i.e. no UV light, no signal)
	0-2000	Sets range of meter at 0-2000 ppm.
	0-200	Sets range of meter at 0-200 ppm.
	0-20	Sets range of meter at 0-20 ppm.
ZERO	---	With the function switch in STANDBY position, this potentiometer is used to adjust the reading to zero.

NOTE: See Figure 2-1 for locations.

TABLE 2-1 cont.

SPAN	---	This vernier potentiometer is used to set the gain of the amplifier to give direct readings of the trace gas concentrations in ppm. The whole number of the setting appears in the window of the control, decimal appears on the dial. A lock secures it at a specific setting.
HI-VOLTAGE	---	This is a normally open microswitch.
	Open	Switch is open when cable not connected, disconnecting high voltage for the UV lamp from the 12 pin connector as a safety precaution.
	Closed	Switch is automatically closed when the cable is attached. This switch may also be closed manually during maintenance checks of the readout assembly without the probe cable attached.
ALARM SET (optional)	---	Potentiometer with screw-driver adjustment. Turns the audible alarm ON or OFF and sets the ppm level at which the alarm sounds. If alarm is low limit, it sounds when measured ppm falls below this value. If alarm is high limit it sounds when measured ppm exceeds this value.

NOTE: See Figure 2-1 for locations.

TABLE 2-2

INDICATORS AND DISPLAYS

Name	Function
Low Battery Indicator Light (red light) (see NOTE)	Illuminates when battery is discharged, indicates need for recharge. Do not use unit when this light is ON. Readings may be taken while battery is being recharged.
Meter (see NOTE)	Indicates concentration of measured gas.
Recorder (optional) (see Figures 2-1 And 8-3)	Provides a record of readings while analyzer operates unattended. Recorder inputs 0 to -5 V DC.

NOTE: See Figure 2-1 for locations.

g. Turn the function switch to the BATT (battery check) position. The needle on the meter will go to the green zone if the battery is fully charged. If the needle is below the green arc or if the Low Battery Indicator comes on, the battery must be recharged before the analyzer is used.

h. Set SPAN pot to the desired value based on the gas to be used.

i. Turn the function switch to the STANDBY position. Turn the zero adjustment until the meter needle is at zero.

j. Calibrate the instrument daily as described in Section 3. Calibration on the selected operating range is desirable.

k. If equipped with optional alarm, set or check the alarm setting at the level desired. Turn the function switch to the desired range, turn the zero adjustment control so the meter needle moves upscale thru the desired value. This simulates real conditions. Observe the reading when the alarm sounds. Adjust the ALARM SET, if required, with a screw driver. Turn the function switch to the STANDBY position and reset the zero position (para. h. above). If the range is to be changed, the alarm must be reset on that range.

l. To operate with optional recorder, add the recorder bracket (see Figure 8-3). Remove the plug in the analyzer case and insert power cord into the recorder. Then connect the signal leads to the appropriate jacks in the control module. The recorder is now operational.

   NOTE: Ranges must be marked on the chart as the recorder prints the meter display as % of Full Scale.

m. Turn the function switch to the appropriate operating position. Start with the 0-2000 position and then switch to the more sensitive ranges. The UV light source should be on, confirmed by briefly looking into the probe to observe a purple glow from the lamp.

WARNING

Do not look at the light source closer than 6 inches with unprotected eyes. Observe only if necessary, then only briefly. Continued exposure to ultraviolet energy generated by the light source can be harmful to eyesight.

n. The analyzer is now operational.

o. Hold the probe so that the extension is at the point where the measurement is to be made. The instrument measures the concentration by drawing the gas in at the end of the extension, through the ionization chamber, and out the handle end of the probe.

WARNING

The instrument measures gases in the vicinity of the operator and a high reading when measuring toxic or explosive gases should be cause for action for operator safety.

p. Take the reading or readings as desired taking into account that air currents or drafts in the vicinity of the probe tip may cause fluctuations in readings. Change the ranges as required.

q. Check battery condition as required. If the Low Battery Indicator comes on, turn analyzer off and recharge.

CAUTION

Use only in an emergency with a low battery when on battery charge.

r. After completion of use, check battery condition as described in para. g.

s. Turn function switch to OFF position.

t. When not operating, leave analyzer in assembled condition, and connected to battery charger.

u. When transporting, disassemble probe and extension from readout assembly and return equipment to its stored condition.

v. In case of emergency, turn function switch to OFF position.

2.4 BATTERY CHARGE

Check the battery charge as described in paragraph 2-3 g during each period of operation, at least once daily. If the battery is low as indicated by the meter reading or the warning indicator, it is necessary to recharge the battery.

To charge the battery, first insert the mini phone plug of the charger into the jack, J6, on the side of the bezel adjacent to the meter. Then insert the charger plug into a 120 or 230 V AC single phase, 50-60 cycle outlet. To ensure that the charger is functioning, turn the function switch, S1, to the battery check (BATT) position. The meter should deflect full scale if the charger is working and connections properly made. For normal battery charging, leave the function switch in the OFF position.

The analyzer can be operated, however, while recharging by turning the function switch to the desired position. Such usage will extend the time required to completely recharge the battery. The battery charger is not Div. II approved.

NOTE: On all Sira approved PI 101s it is necessary to connect the probe assembly before turning on the instrument and re-charging. Without following this procedure the instrument will not show battery check.

SECTION 3

CALIBRATION

3.1 INTRODUCTION

The PI 101 Analyzer is designed for trace gas analysis in ambient air and is calibrated at HNU with certified standards of benzene, vinyl chloride and isobutylene. Other optional calibrations are available (e.g., ammonia, ethylene oxide, H2S, etc.). Calibration data is given in the data sheet. If a special calibration has been done, the data is given in the Application Data Sheet, which notes the sample source, type of calibration (see Section 8, Appendix), and other pertinent information.

Good instrumentation practice calls for calibration on the species to be measured in the concentration range to be used. This procedure assures the operator that the analyzer is operating properly and will generate reliable data.

Some general points to consider when calibrating the PI 101 are that the analyzer is designed for operation at ambient conditions and therefore the gas standards used for calibration should be delivered to the analyzer at ambient temperatures and pressure and at the proper flow rates.

WARNING:

The PI 101 is a non-destructive analyzer; calibrations using toxic or hazardous gases must be done in a hood.

The frequency of calibration should be dictated by the usage of the analyzer and the toxicity of the species measured. If the analyzer has been serviced or repaired, calibration should be done to verify operation and performance. It is recommended that calibration be checked frequently at first (daily or every other day) and then regularly based on the confidence level developed.

The normal meter scaleplate is 0 to 20. If the scaleplate is different, refer to the Application Data Sheet. If there are questions, consult the HNU representative before proceeding with calibration check.

An accurate and reliable method of calibration check is to use an analyzed gas cylinder in a test setup as shown in Figure 3-1 and described below. Additional material on calibration is given in Section 8, Appendix.

3.2 ANALYZED GAS CYLINDER

a. Concentration - The calibration gas cylinder is to contain the species of interest made up in an air matrix at or near the concentration to be analyzed. If the component is unstable in air, another matrix is to be used. The final calibration mixture should be similar to the sample the PI 101 will analyze. If the expected concentration is not known then a concentration should be chosen that will cause a scale displacement of 50 to 80% on the X10 range. Calibration on X10 range will provide accurate values on the X1 range as well.

For use on the 0-2000 range, a two-standard calibration is preferred: one at 70 to 85% of the linear range and the other at 25 to 35% of the linear range. With the linear range of approximately 600 ppm for most compounds these points would lie between 420 to 510 ppm and 150 to 210 ppm, respectively.

b. Stability - The calibration gas must be stable within the cylinder during the period of use. If the calibration is required in the field, then use of a small cylinder is recommended. In addition, the choice of cylinder material in contact with the gas must be considered (steel, aluminum or teflon). If there are any questions, the operator should request stability and usage information from the gas supplier.

WARNING

Extreme care must be taken in the handling of gas cylinders. Contents are under high pressure. In some cases, the contents may be hazardous. Many gas suppliers will provide data sheets for the mixtures upon request.

c. Delivery - The cylinder containing the calibration mixture must be connected to a proper regulator.

WARNING

Never open the valve on a gas cylinder container without a regulator attached.

Leak test all tank/regulator connections as well as the main cylinder valve to prevent toxic or hazardous materials from leaking into the work area. Care must be taken that the materials of construction of the regulator will not interact with the calibration gas.

One method of sampling the calibration gas is illustrated in Figure 3-1. Connect the cylinder to one leg of the tee, a flow meter to the opposite leg, and the probe to the third leg. The flow meter does not require a valve. If there is a valve, it must be left wide open. the flowmeter is only to indicate excess flow. Adjust the flow from the regulator such that only a little excess flow is registered at the flowmeter.

This insures that the PI 101 sees the calibration gas at atmospheric pressure and ambient temperature.

d. Usage - Generally, a gas cylinder should not be used below 200-300 psi as pressure effects could cause concentration variations. The cylinder should not be used past the recommended age of the contents as indicated by the manufacturer. In case of difficulty, verify the contents and concentration of the gas cylinder.

e. Alternate means of calibration are possible. For more information, contact the HNU Service Department.

3.3 PROBE

a. Identify the probe by the lamp label. If a question exists, disassemble the probe and inspect the lamp. The energy of the lamp is etched into the glass envelope.

b. Connect the probe to the readout assembly, making sure the red interlock switch is depressed by the ring on the connector.

c. Set the SPAN pot to the proper value for the probe being calibrated. Refer to the calibration memo accompanying the probe.

d. Check the Ionization Potential (IP) of the calibration gas to be used. The IP of the calibration gas must be at or below the IP of the lamp.

e. Proceed with the calibration as described in Section 3.4. Check the calibration memo for specific data. If any questions develop, call the HNU representative.

f. NOTE: The 11.7eV lamp has a special cleaning compound. Do not use water or any other cleaning compound with the 11.7 eV lamp. Do not interchange ion chambers, amplifier boards or lamps between probes. (See Section 5.2).

3.4 PROCEDURE

a. Battery check - Turn the function switch to BATT. The needle should be in the green region. If not, recharge the battery.

b. Zero set - Turn the function switch to STANDBY. In this position the lamp is OFF and no signal is generated. Set the zero point with the ZERO set control. The zero can also be set with the function switch on the X1 position and using a "Hydrocarbon-free" air. In this case "negative" readings are possible if the analyzer measures a cleaner sample when in service.

c. 0-20 or 0-200 range - For calibrating on the 0-20 or 0-200 range only one gas standard is required. Turn the function switch to the range position and note the meter reading. Adjust the SPAN control setting as required to read the ppm concentration of the standard. Recheck the zero setting (step b.). If readjustment is needed, repeat step c. This gives a two-point calibration; zero and the gas standard point. Additional calibration points can be generated by dilution of the standard with zero air if desired (see Section 8).

d. 0-2000 range - For calibrating on the 0-2000 range, use of two standards is recommended as cited in Section 3.2a. First calibrate with the higher standard using the SPAN control for setting. Then calibrate with the lower standard using the ZERO adjustment. Repeat these several times to ensure that a good calibration is obtained. The analyzer will be appoximately linear to better than 600 ppm, (see Figure 3-2). If the analyzer is subsequently to be used on the 0-20 or 0-200 range, it must be recalibrated as described in steps b. and c. above.

e. Lamp cleaning - If the span setting resulting from calibration is 0.0 or if calibration cannot be achieved, then the lamp must be cleaned (see Section 5.2).

f. Lamp replacement - If the lamp output is too low or if the lamp has failed, it must be replaced (see Section 5.3).

3.5 CALIBRATION CHECKING

Rapid calibration checking in the field can be accomplished by use of a small disposable cylinder containing isobutylene. Immediately after a calibration has been completed, a reading is taken on a special isobutylene standard. This provides a reference concentration measurement for later checking in the field. This can be done at any time with a portable cylinder containing this same special standard, using this reference reading as a check, and making adjustments to the analyzer if necessary. In effect, this is an indirect method of calibration, one maintaining the calibration to give direct readings for the original gas mixture, but using the portable isobutylene cylinder. Details are given in Section 8.2 of the Appendix.

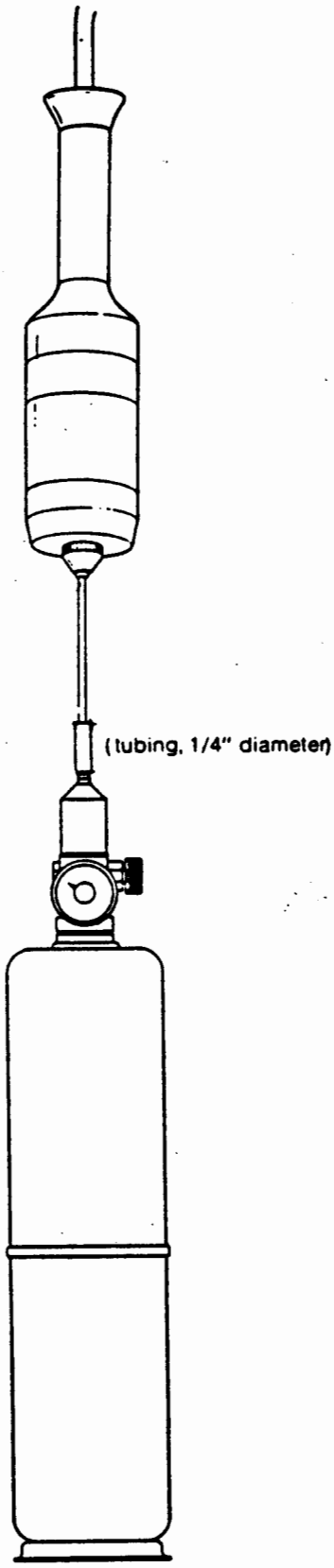

FIGURE 3-1
CALIBRATION TEST SET UP

SECTION 4

FUNCTIONAL DESCRIPTION

.1 PRINCIPLE OF OPERATION

The analyzer measures the concentration of trace gases present in the atmosphere by photoionization. Photoionization occurs when an atom or molecule absorbs a photon of sufficient energy to release an electron and become a positive ion. This will occur when the ionization potential of the molecule in electron volts (eV) is less than the energy of the photon. The source of photons is an ultraviolet lamp with an energy of either 9.5, 10.2 or 11.7 eV.

The detection process is shown in Figure 4-1. Sample gases enter through the inlet into the ion chamber and are exposed to photons emanating from the ultraviolet lamp. Ionization occurs for those molecules having ionization potentials near to or less than that of the lamp.

A positive-biased polarizing electrode causes these positive ions to travel to a collector electrode in the chamber. Thus the ions create an electrical current which is amplified and displayed on the meter.

This is proportional to the concentration of trace gas present in the ion chamber and to the sensitivity of that gas to photoionization.

In service, the analyzer is first calibrated with a gas of known composition equal, close to or representative of that to be measured.

.2 IONIZATION POTENTIALS

Gases with ionization potentials near to or less than that of the lamp will be ionized. These gases will thus be detected and measured by the analyzer.

Gases with ionization potentials higher than that of the lamp will not be detected.

Ionization potentials for various atoms, molecules and compounds are given in Tables 8-1 thru 8-13 in Section 8, Appendix.

The ionization potential of the major components of air, i.e., oxygen, nitrogen, and carbon dioxide, range from about 12.0 eV to about 15.6 eV and are not ionized by any of the three lamps.

Gases with ionization potentials near to or slightly higher than the lamp are partially ionized, with low sensitivity.

.3 IONIZATION SENSITIVITY

The amount of ionization of a species of gas exposed to photons, its sensitivity, is a characteristic of that particular species. This is illustrated in Table 4-1 for a number of chemical groupings and in Table 8-14 for a large number of individual species when exposed to photons from a 10.2 eV lamp.

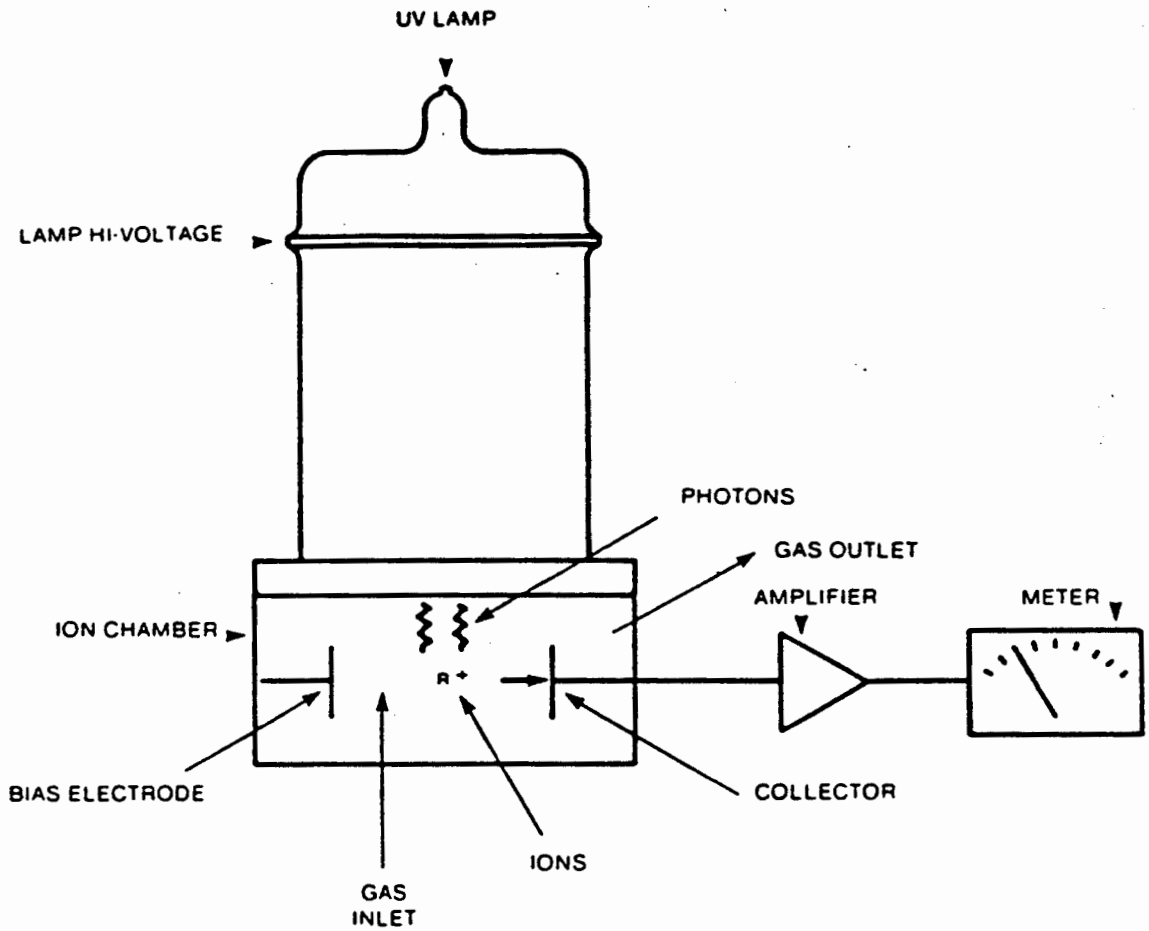

FIGURE 4-1
DETECTION PROCESS

The species with the higher values are more sensitive to the 10.2 eV photons than are those with lower values. For example, referring to data in Table 8-14, an analyzer calibrated for benzene, when measuring a sample containing 10 ppm of benzene, will read 10.0 and when measuring a sample containing 10 ppm of vinyl chloride will read 5.0. This shows the lower sensitivity of the vinyl chloride. Similar conditions are the case for the 9.5 and 11.7 eV lamps.

4.4 CALIBRATED PROBES AND SELECTIVITY

The standard probe provided with the analyzer contains a 10.2 eV lamp. Optional probes containing lamps of 9.5 and 11.7 eV permit selective determination or exclusion of species.

The probe with the 9.5 eV lamp permits measurement of species having IP values lower than 9.5 eV in the presence of interfering species with IP values above 9.5 eV.

The probe with the 11.7 eV lamp permits measurement of species with IP values above 10.2 up to aproximately 11.7 eV.

The probes with different lamps are interchangeable in use within individual readout assemblies for different applications. The amplifier and ion chamber in the probe are selected for the specific eV lamp. Lamps of different eV ratings cannot be interchanged between probes. Examples of selective application of these probes is given in Table 4-2. Additional applications of the use of the probes are described in the sections that follow and illustrated in Figure 4-2. Further examples are given (without discussion) in Table 4-3. Re-zeroing is performed after each probe interchange.

4.5 10.2 eV PROBE

The 10.2 eV probe is the standard probe used with the Trace Gas Analyzer. The approximate span settings for a 10.2 eV probe that would give direct readings of the amounts of trace gas of a particular species in a sample is given in Table 8-14. for example, when the span control is set at 4.3 the analyzer will read 10 ppm when measuring a sample containing 10 ppm of vinyl chloride. These span settings will vary with the condition of the lamp. Application of the 10.2 eV probe is illustrated in examples "a", "b", and "c" in Figure 4-2. In each case the trace gas (or gases) is contained in a standard atmosphere.

Example "a" shows the use of the 10.2 eV probe to measure Vinyl Chloride (IP=9.995) by itself.

Fxample "b" shows the use of the 10.2 eV probe to measure Vinyl Chloride (IP=9.995) in the presence of a second gas, Acetylene (IP=11.4). The acetylene is not ionized and the probe gives a direct reading of the Vinyl Chloride above.

Example "c" shows the use of the 10.2 eV probe to measure Isoprene (IP=9.08) by itself. A 9.5 eV probe may also be used but is less sensitive. the 10.2 eV probe is recommended.

TABLE 4-1

RELATIVE PHOTOIONIZATION SENSITIVITIES FOR GASES

Chemical Grouping	Relative Sensitivity (see NOTE)	Examples
Aromatic	10	Benzene, Toluene, Styrene
Aliphatic Amine	10	Diethylamine
Chlorinated Unsaturated	5-9	Vinyl Chloride, Vinylidene Chloride, Trichloroethylene
Carbonyl	7-9	MEK, MiBK, Acetone, Cyclohexanone
Unsaturated	3-5	Arolein, Propylene, Cyclohexanone,Allyl Alcohol
Sulfide	3-5	Hydrogen Sulfide, Methyl Mercaptan
Paraffin (C5-C7)	1-3	Pentane, Hexane, Heptane
Ammonia	0.3	
Paraffin (C1-C4)	0	Methane, Ethane

NOTE: Relative sensitivity = meter reading when measuring 10 ppm of the listed gas with instrument with 10.2 eV probe calibrated for 10 ppm of benzene, span pot setting = 9.8 for direct reading of benzene.

TABLE 4-2

TYPICAL APPLICATIONS OF INTERCHANGEABLE PROBES

Compound	Ionization potentials (eV)	Relative Sensitivity 9.5/10.2 eV	11.7/10.2 eV
p-Xylene	8.44	0.10	0.104
p-Chlorotoluene	8.70	0.09	0.112
Toluene	8.82	0.09	0.112
o-Chlorotoluene	8.83	0.075	0.112
Ethyl Acetate	9.19	0.075	0.112
Benzene	9.24	0.10	0.10
Methyl Mercaptan	9.24	0.10	0.072
Pyridine	9.32	0.075	0.122
Allyl Alcohol	9.67	0.10	0.112
Crotonaldehyde	9.88	0.075	0.104
Amyl Alcohol	9.80	0.09	0.116
Cyclohexane	9.88	0.075	0.104
Vinyl Chloride	9.95	0.085	0.112
Butanol	10.94	0.09	0.176
Ammonia	10.15	0.06	0.160
Acetic Acid	10.37	0.04	0.560
Ethylene	10.52	0.0	0.320
Ethylene Oxide	10.56	0.0	0.298

$$\text{Relative sensitivity} = \frac{\text{Response with 9.5 or 11.7 eV probe}}{\text{Response with 10.2 eV probe}}$$

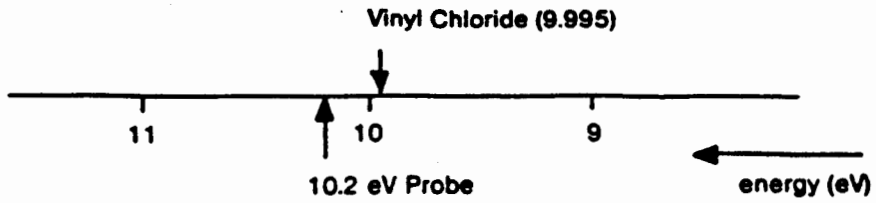

a. 10.2 eV probe measures Vinyl Chloride (IP = 9.995)

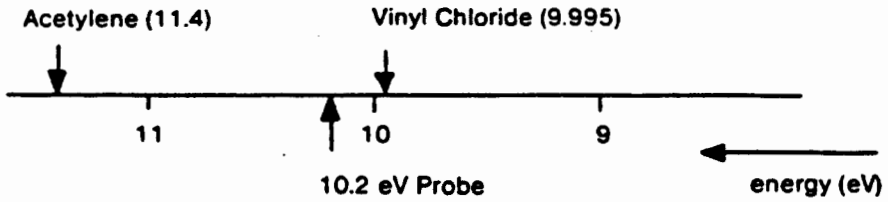

b. 10.2 eV probe measures Vinyl Chloride (IP = 9.995)
but not Acetylene (IP = 11.4)

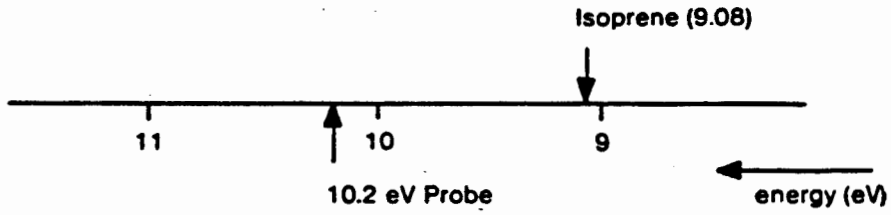

c. 10.2 eV probe measures Isoprene (IP = 9.08)

FIGURE 4-2
APPLICATION OF PROBES

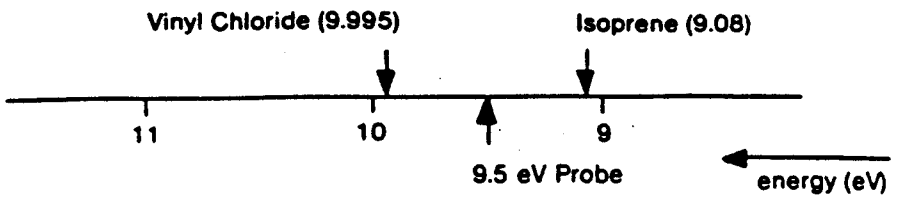

d. 9.5 eV probe measures Isoprene (IP = 9.08) but not Vinyl Chloride (IP = 9.995)

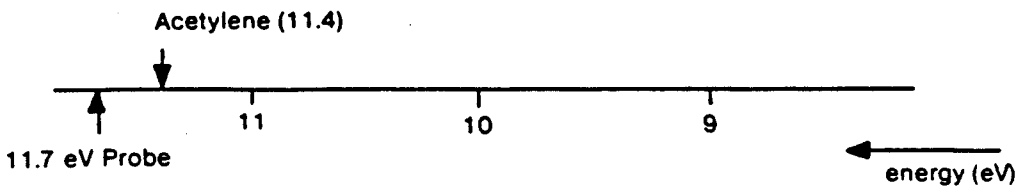

e. 11.7 eV probe measures Acetylene (IP = 11.4)

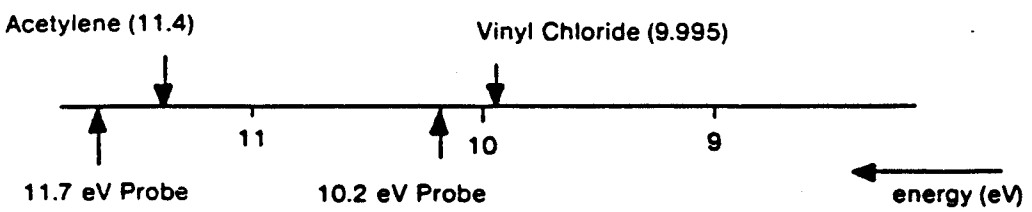

f. 11.7 eV probe measures both Acetylene (IP = 11.4) and Vinyl Chloride (IP = 9.995)

10.2 eV probe measures Vinyl Chloride but not Acetylene

Difference between the two readings is the measure of Acetylene

FIGURE 4-2
APPLICATION OF PROBES CONTINUED

TABLE 4-3

PROBE APPLICATION EXAMPLES

Application	Recommended Probe
Styrene (IP = 8.47) Alone	10.2
Hexane (IP = 10.48) Alone	10.2
Formaldehyde (IP = 10.87) Alone	11.7
Styrene/Hexane Together	10.2 and 9.5 Use 10.2 to measure total, 9.5 to measure Styrene, difference will be the concentration of Hexane.
Formaldehyde/Styrene Together	10.2 and 11.7 Use 11.7 to measure total, 10.2 to measure Styrene, difference will be the contentration of Formaldehyde

4.6 9.5 eV PROBE

The 9.5 eV probe is used to measure gases with IP<9.5 when it is necessary to exclude gases that may be present having IP>9.5 eV and <10.2 eV. This is illustrated by example "d" in Figure 4-2. Here a 9.5 eV probe is used to measure Isoprene (IP=9.08) in the presence of Vinyl Chloride (IP=9.995).

Gain settings for a 9.5 eV probe to give direct readings for various species are given in Table 8-15.

4.7 11.7 eV PROBE

The 11.7 eV Probe is used to measure trace gases with IP>10.2 eV but less than 11.7 eV. The use of this probe by itself is illustrated in example "e". Here the 11.7 eV probe is used to measure Acetylene (IP=11.4 eV). The use of this probe in conjunction with a 10.7 eV probe is illustrated in example "f". In this case, two gases are present, Acetylene (IP=11.4) and Vinyl Chloride (IP=9.995). The objective is to obtain a measurement of the Acetylene alone.

The 11.7 eV probe measures the total presence of both Acetylene and Vinyl Chloride together. The 10.2 eV probe measures just the Vinyl Chloride, excluding the Acetylene. The difference between the two readings is the measure of the Acetylene.

Gain settings for the 11.7 eV probe to give direct readings for various species are given in Table 8-15.

4.8 EQUIPMENT DESCRIPTION

The components of the analyzer are located in the probe and the readout assembly (see Figures 4-3 and 4-4). The ion chamber, UV light source, amplifier board, and fan are located in the probe assembly. The battery, the power supply board, and the meter are located in the readout assembly. The probe and the readout assembly are connected by an 800 cm (32") cable.

The fan draws gas in through the probe and ion chamber. The flow rate is approximately 100 cubic centimeters per minute. Small variations in the flow rate do not affect the measurement. A major obstruction to the flow, however, will prevent proper operation and lengthen response time. The fan cannot draw a sample from any distance or across a pressure drop.

The output from the ion chamber is amplified and read out on the meter.

Voltage for the light source, ion chamber, amplifier and fan is provided from a DC converter on the power supply board. The battery provides the source of power for the converter. The positive side of the battery is grounded.

The input signal from the ion chamber enters at connector P1/J1 (see schematic Figure 4-5), goes to transistor Q1 and amplifier A1. The zero adjustment setting on the control panel enters thru pins 3 and C on P2/J2, thence to the transistor Q1.

Power for the amplifier enters on pins D and F respectively. Span control adjustment from the control panel enters at pin B, signal output at pin E, and ground connector at pin J.

The output signal from the amplifier goes thru pin E in the cable connector P3/J3 to pad 11 on the power supply board, to the resistor network R39 thru R49, including the adjustable pot R48. From there it goes to the meter through the function switch on the control panel.

Connections from the resistor network through the function switch serve to set the operating range of the meter. Input to the span control potentiometer comes from this same network through the function switch. The output of the span control pot provides feedback control to the amplifier through pin H on the cable, pin B on the amplifier board, and feedback resistor R5 to the amplifier input.

Power for the UV lamp, D1, is provided by rectifier networks containing CR4-9 operating from the red and white terminals of transformer T1. Voltage for the lamp (pad 22 on the power supply board or J3 pin D, Figure 4-6) will be as follows for the several different conditions that may exist.

Condition	Voltage, V DC
Probe connected, lamp operating properly	-350 to -450
Probe connected, lamp not operating properly	-1100 to -1200
Probe not connected, high voltage switch not depressed	0 to -300
Probe not connected, high voltage switch depressed manually	-1100 to -1200

Power for the ion chamber is provided by rectifier network CR2 and 3 operating from terminals 6 and 7 of T1 and voltage regulator Z1. Power for the amplifier is provided by rectifier networks CR13-16 operating from terminals 4,5 and 8 of T1. Power for the fan motor is provided by rectifier network CR18-21 operating from terminals 1, 2 and 3 of transformer T1. Conversion of the DC from the battery for input power to T1 is accomplished by Z2. Power for a recorder is available at connector J7.

D3 provides indication if the battery voltage falls below the prescribed level of 11.23 V DC. J6 provides for connection of the battery charger. The six bank switch, S1, is the function switch. Microswitch S2 disables the high voltage power to the cable connector when disconnected.

The alarm board (optional) is connected to the power supply board by the cable containing connector P6/J6. The amplifier output signal, pin 9 on P6/J6 (see schematic Figure 4-6), goes to one input of amplifier U1 (see schematic Figure 4-5).

The output from the alarm set control on the front panel, pin 4 on P6/J6, goes to the second input of U1. The output from U1 operates the audible alarm through Q3 or Q2. Only one of these is connected at the factory to give low alarm or high alarm, respectively, as requested by the user. The alarm will operate when the signal falls or rises above this threshold. Reference power for the alarm setting enters the board at pin 2 and power for the amplifier and transistors Q1 thru Q3 enters at pin 5. The battery charger provides 15.0 V DC for recharging.

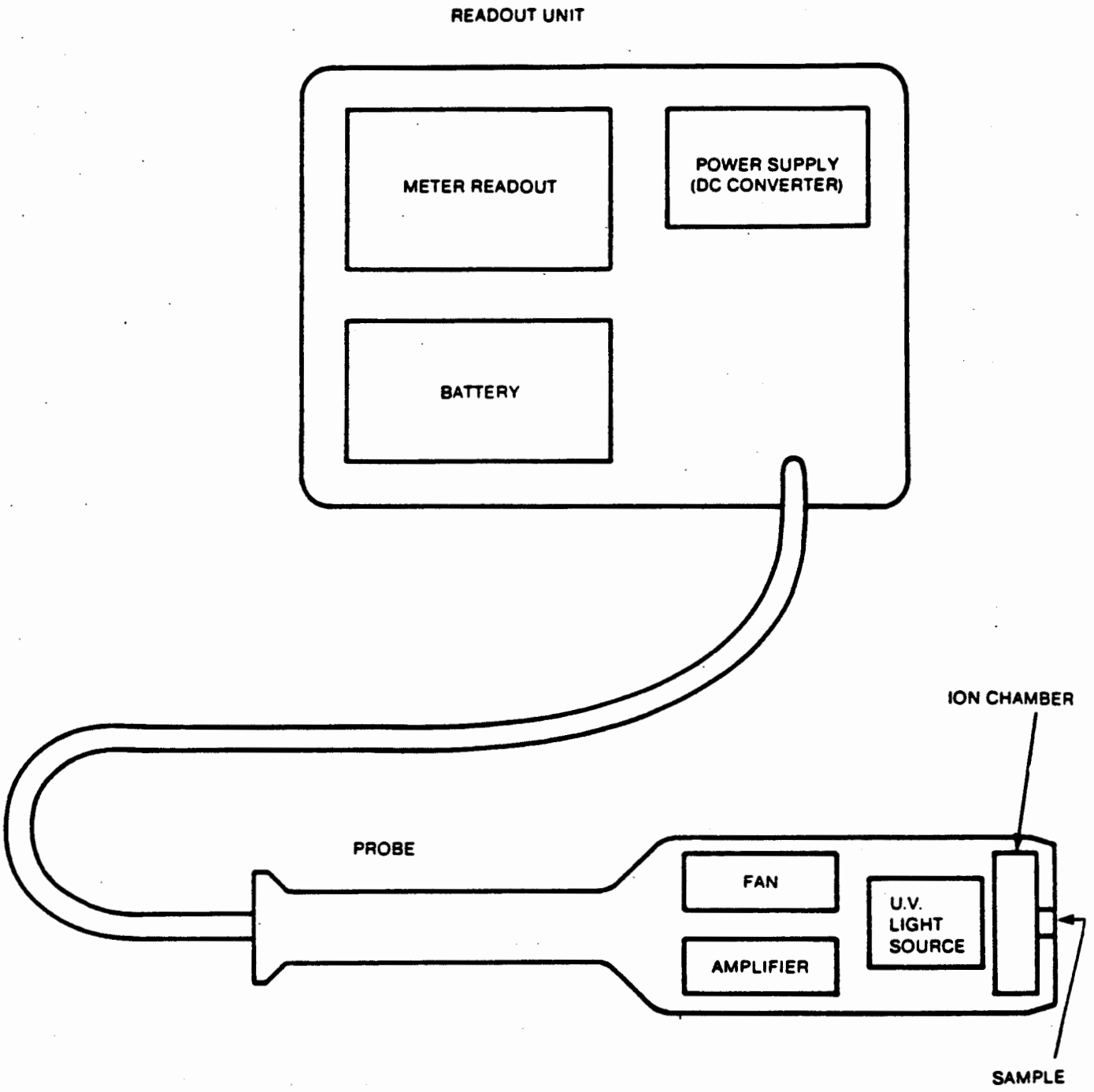

FIGURE 4-3
BLOCK DIAGRAM
COMPONENT LOCATION

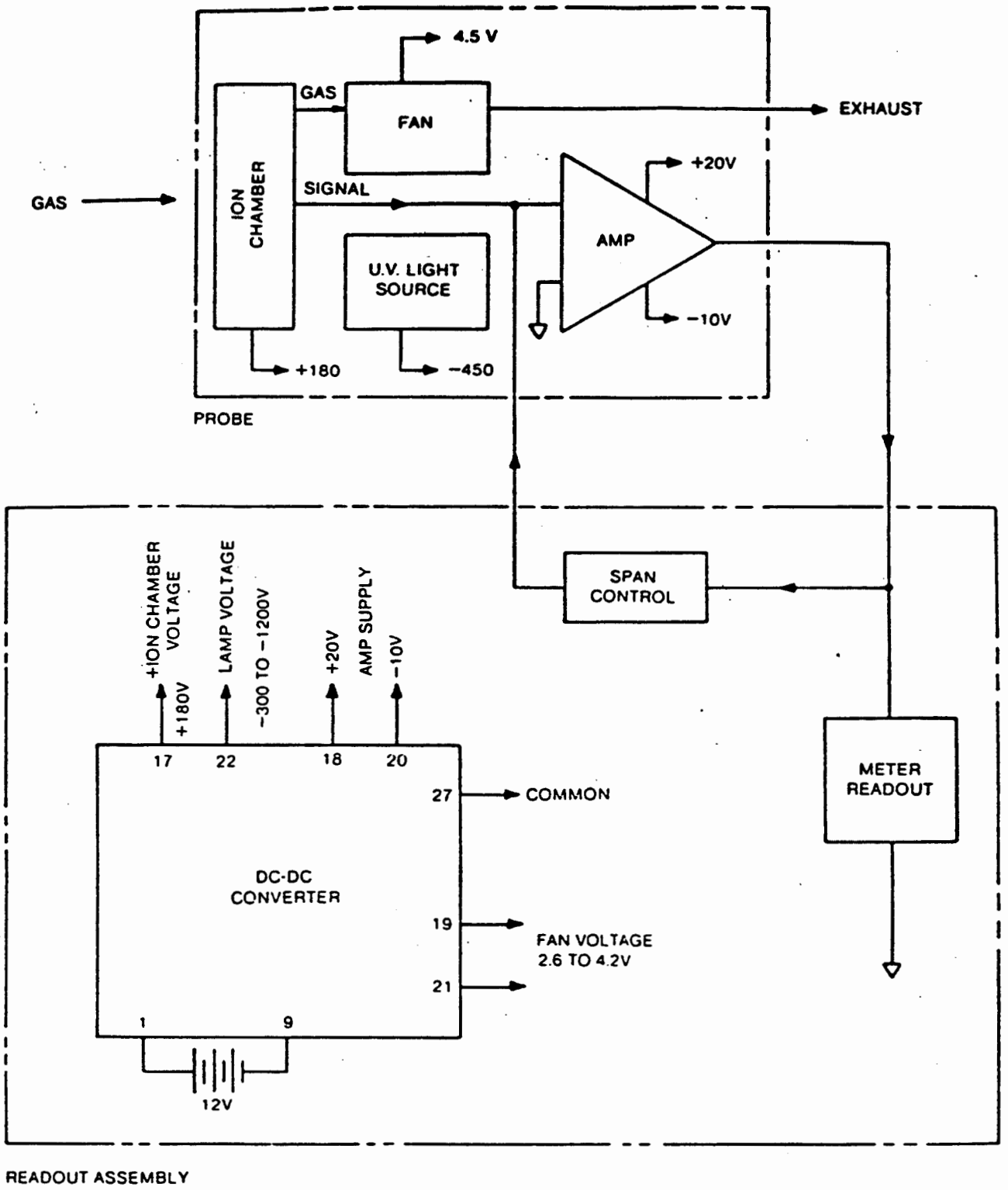

NOTE: ALL VOLTAGES SHOWN ARE NOMINAL VALUES.

FIGURE 4-4
BLOCK DIAGRAM
ELECTRICAL CONNECTIONS

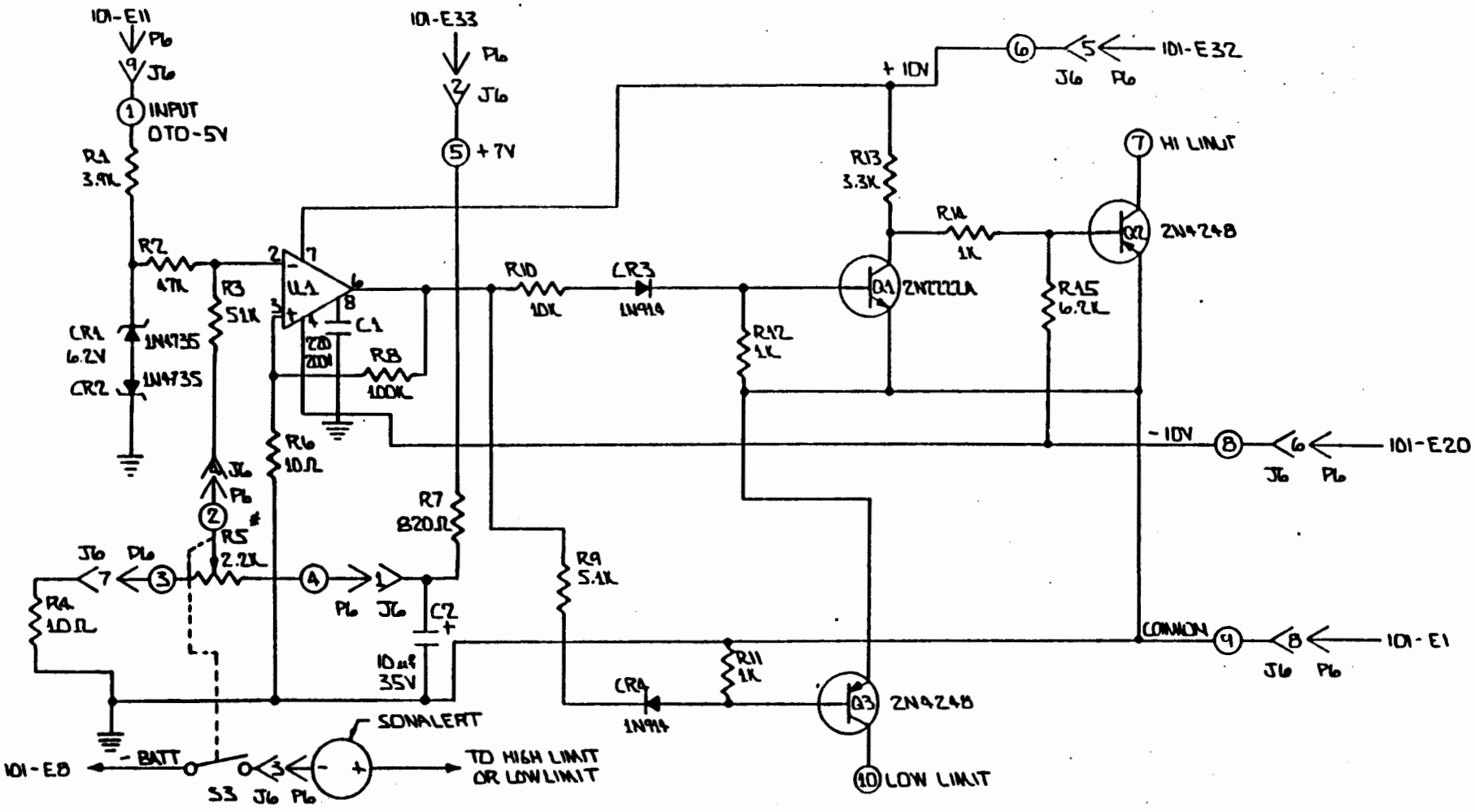

NOTE:

1) ALL RESISTORS ARE 1/4W C.C. OR C.F. ±5%.
2) FOR BOARDMASTER SEE HNU DWG. DB100584.
3) FOR P.C. MASTER SEE HNU DWG. MB100583.
4) FOR SILKSCREEN SEE HNU DWG. MB100585.
5) * R5, S1 MOUNTED ON FRONT PANEL.

FIGURE 4-5
SCHEMATIC DIAGRAM, ALARM BOARD

SECTION 5

MAINTENANCE

5.1 INTRODUCTION

Maintenance of the analyzer consists of cleaning the lamp and ion chamber, replacement of the lamp or other component parts or subassemblies.

WARNING: Turn the function switch on the control panel to the OFF position before any disassembly. Otherwise, high voltage of 1200 V DC will be present.

WARNING: Use great care when operating the analyzer with the readout assembly outside its case due to the presence of 1200 V DC.

WARNING: Do not look at the light source from any closer than 6 inches with unprotected eyes. Observe only briefly. Continued exposure to ultraviolet energy generated by the light source can be harmful to eyesight.

CAUTION: Do not interchange lamps of different eV ratings in a probe. Amplifier and components are selected for a specific eV lamp. A probe with the wrong lamp will not operate properly.

5.2 UV LAMP AND ION CHAMBER CLEANING

During periods of operation of the analyzer, dust or other foreign matter could be drawn into the probe forming deposits on the surface of the UV lamp or in the ion chamber. This condition is indicated by meter readings that are low, erratic, unstable, non-repeatable, or drifting, or show apparent moisture sensitivity. These deposits interfere with the ionization process and cause erroneous readings. Check for this condition monthly or as required. Cleaning can be accomplished as follows:

a. Disassemble the probe and remove the lamp and ion chamber (see Section 5.5). Exercise great care in doing so to prevent inadvertent damage to these components.

b. First check the lamp window for fouling by looking at the surface at an incident angle. Any deposits, films or discoloration may interfere with the ionization process. Clean the window as follows:

1) 9.5 and 10.2 eV lamps

a) First clean by rubbing gently with lens tissue dipped in a detergent solution.

b) If this does not remove deposit, apply a small amount of HNU cleaning compound (PA101534) directly onto the lens of the lamp and spread evenly over surface with a non-abrasive tissue (e.g. Kim-Wipe) or a lens tissue.

c) Wipe off compound with a new tissue.

d) Rinse with warm water (about 80 degrees F) or damp tissue to remove all traces of grit or oils and any static charge that may have built up on the lens. Dry with new tissue.

e) Reinstall lamp in detector and check analyzer operation.

f) If performance is still not satisfactory replace the lamp. See Section 5.3 and Section 6.

2) 11.7 eV lamp

a) Clean by putting a freon or chlorinated organic solvent on a tissue and rubbing gently.

b) DO NOT CLEAN THIS LAMP WITH WATER OR ANY WATER MISCIBLE SOLVENTS (methanol or acetone). It will damage the lamp.

c) DO NOT USE THE CLEANING COMPOUND used for the 9.5 and 10.2 eV lamps under any circumstances on the 11.7 eV lamp.

c. Then inspect the ion chamber for dust or particulate deposits. If such matter is present, the chamber can be cleaned by removing the outer Teflon ring, and the four screws holding the retaining ring. Carefully move the retaining ring aside (NOTE: this is soldered) and remove the screen. A tissue or cotton swab, dry or wetted with methanol, can be used to clean off any stubborn deposits. The assembly can also be gently swirled in methanol and dried gently at 50-60 degrees C for approximately a half hour. No liquid must be present at reassembly as this would affect the performance. Do not clean the ion chamber with the HNU cleaning compound cited above in para. b.1)b).

d. Reassemble the probe and check analyzer operation.

e. If performance is still not satisfactory replace the lamp. See Section 5.3.

5.3 LAMP REPLACEMENT

To replace the lamp, disassemble the probe, remove the old lamp, install a new one of the same eV rating and reassemble.

WARNING

Turn the function switch on the control panel to the OFF position before disassembly. Otherwise, high voltage of 1200 V DC will be present.

CAUTION

Do not exchange lamps of different eV ratings in a probe. Amplifier and components are selected for a specific eV lamp. A probe with the wrong lamp will not operate properly.

Set the SPAN pot to 9.8 for the 10.2 eV lamp. Remove the readout assembly case (see Section 5.6). Locate the gain control potentiometer, R48, on the power supply board as shown on Figure 6-1. Recalibrate the analyzer adjusting this potentiometer, R48, with a small screwdriver to obtain the specified ppm reading, leaving the SPAN pot set at 9.8.

For the 9.5 and 11.7 eV lamps see the Application Data Sheet or calibrations memo for the proper span pot settings and readings.

WARNING

Use great care when operating the analyzer with the readout assembly outside its case due to the presence of 1200 V DC.

When calibration is accomplished, turn the analyzer OFF and replace the readout assembly in its case.

Adjustment of R48 potentiometer is used only when a new lamp is installed. At all other times adjustment is accomplished using the SPAN control potentiometer.

If calibration cannot be achieved, see Section 6, Troubleshooting.

5.4 LAMP SIZE CHANGE

If different applications for the analyzer would require different size lamps, separate probes, each with its own eV lamp, must be used. A single readout assembly will serve for any of the probes. A change in probe will require resetting of the zero control and the span pot. Calibration should be checked to verify proper operation.

5.5 PROBE DISASSEMBLY/ASSEMBLY

WARNING

Turn the function switch on the control panel to the off position before disassembly. Otherwise high voltage of 1200 V DC will be present.

Disconnect the probe cable connector at the readout assembly. Disassemble the probe by first removing the exhaust screw at the base of the probe adjacent to the handle (see Figure 5-1). Grasp the end cap in one hand and the probe shell in the other, gently pull to separate the end cap and the lamp housing from the shell.

Hold the lamp housing with the black end cap upright. Loosen the screws on the top of the end cap, separate the end cap and ion chamber from the lamp and lamp housing.

CAUTION

Care must be taken so that the ion chamber does not fall out of the end cap or the light source does not fall out of the lamp housing.

Turn the end cap over in the hand. Tap lightly on the top. The ion chamber should fall out of the end cap into the hand.

Place one hand over the top of the lamp housing and tilt slightly. The light source will slide out of the housing.

The amplifier board can be removed from the lamp source housing assembly (see Figure 5-2) by unsnapping the coaxial connector, J1, and then removing the retaining screw. The amplifier board will then slide out of the housing assembly.

Reassemble the probe by first sliding the lamp back into the lamp housing. Place the ion chamber on top of the lamp housing, making sure that the contacts are properly aligned. The ion chamber fits only one way.

If the ion chamber is to be replaced always use one identical to the one being removed. Check the aperture (small: 3.0 mm; large: 6.0 mm) at the top of the ion chamber and materials of construction (gold-plated or Teflon) to ensure proper replacement. See Parts List, Section 7.

Place the end cap on top of the ion chamber and replace the two screws. Tighten the screws only enough to seal the O-ring.

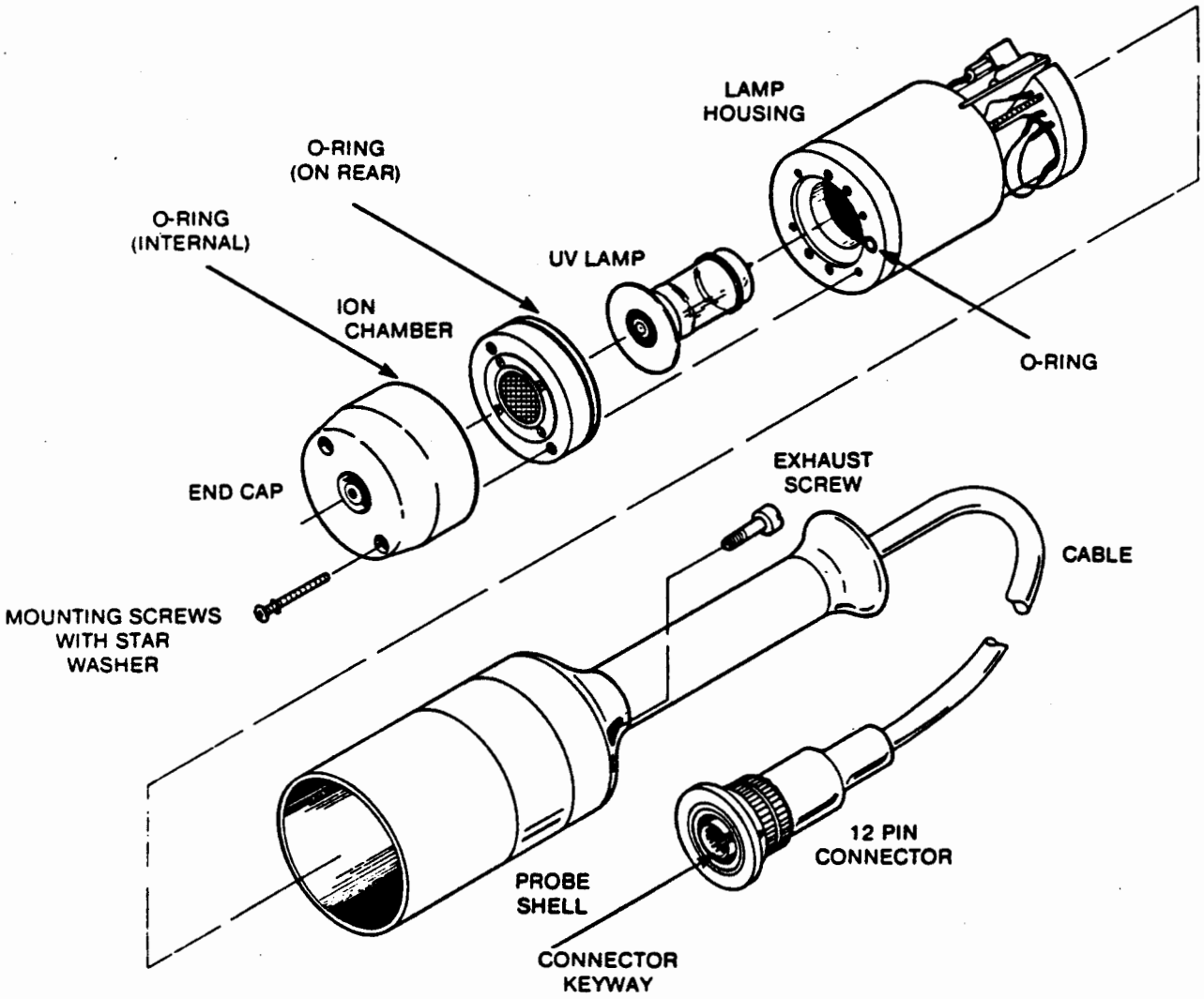

FIGURE 5-1
PROBE ASSEMBLY

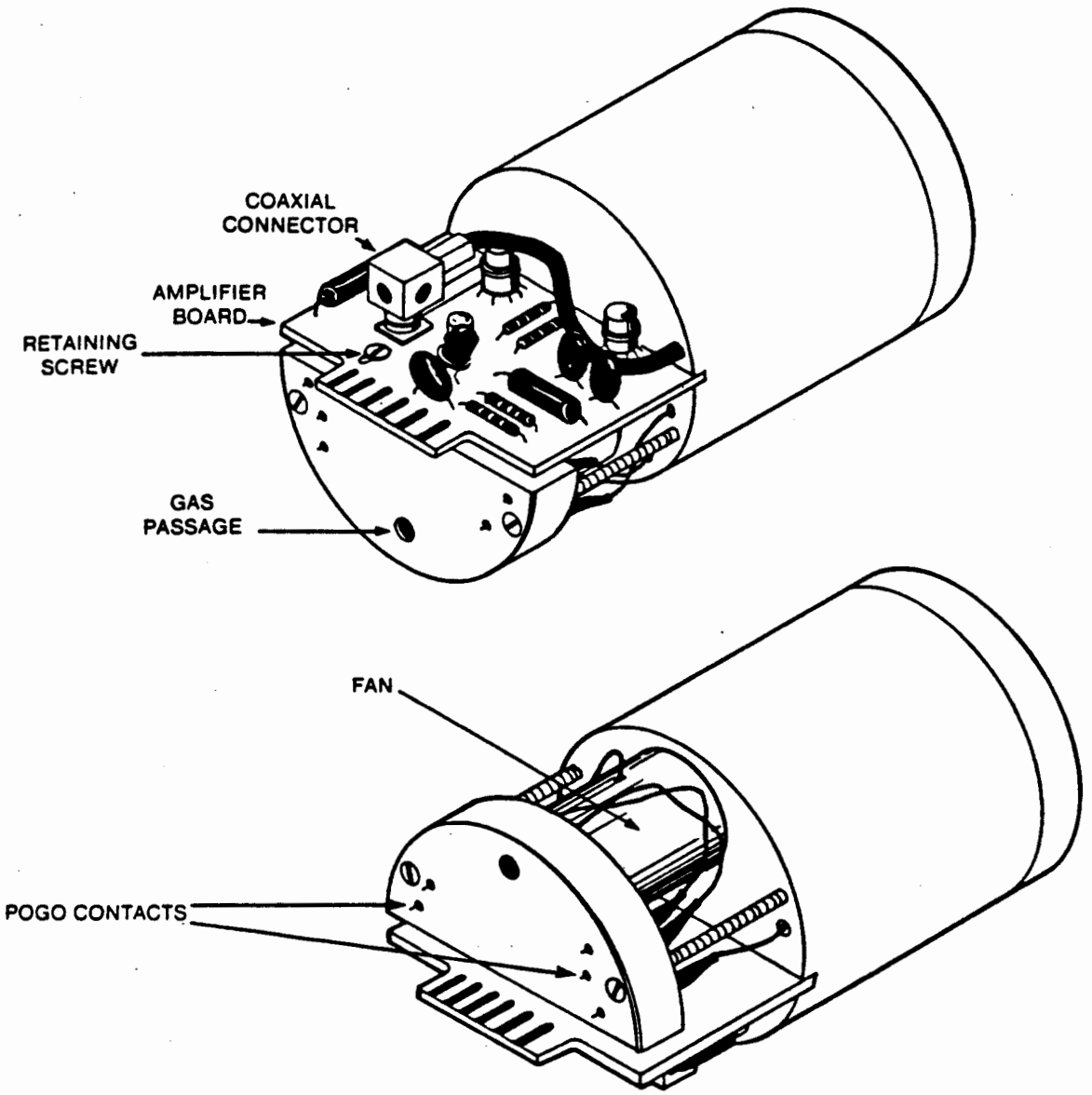

FIGURE 5-2
LAMP HOUSING ASSEMBLY

CAUTION

Do not over-tighten these screws.

Line up the pins (pogo contacts) on the base of the lamp housing with the pins inside the probe shell. Gently slide the housing assembly into the probe shell.

The end cap should meet the probe shell evenly after final assembly. If not, the ion chamber may be installed wrong.

CAUTION

DO NOT FORCE the assembly into the shell.
It fits only one way.

If it does not reassemble readily, remove and check pin alignment. Check to ensure pogo contacts are not bent. Refasten the exhaust screw at the base of the probe.

Align the 12 pin probe connector to the readout assembly and reconnect with a twisting motion until a click occurs. Check to ensure the high voltage microswitch is properly depressed. The lamp should light if the function switch is turned to any position except STANDBY.

5.6 READOUT DISASSEMBLY/ASSEMBLY

WARNING

Turn the function switch on the control panel to the OFF position before disassembly. Otherwise, high voltage of 1200 V DC will be present.

Disconnect the probe cable connection. Remove recorder jacks and cable or the plastic plug cap. Loosen the screw on the botton of the case and, holding the instrument by the bezel, remove the case (see Figure 5-3).

a. The control assembly consisting of the Printed Circuit Board (PCB) and control panel can be separated from the readout assembly by the following steps:

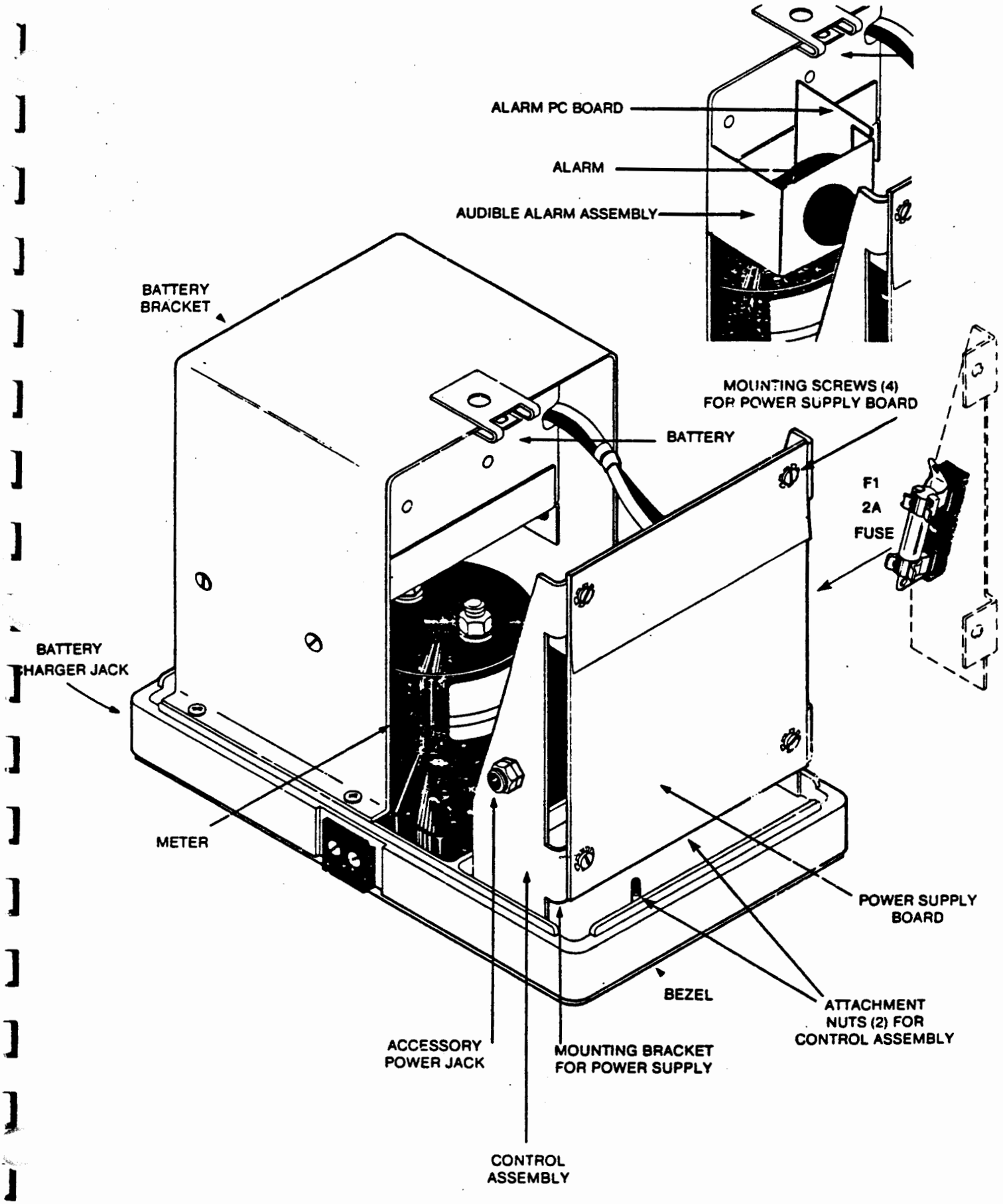

FIGURE 5-3
READOUT ASSEMBLY

1) Separate the Molex connectors in the cables to the control assembly.

2) Remove the two attachment nuts at the base of the assembly.

3) Remove the two screws at the top of the power supply board holding it to the assembly brackets.

4) Compress the brackets and slide the assembly thru the bezel. Remove a third screw at the lower corner of the board, if necessary.

b. The optional alarm assembly can be separated as follows

1) Disconnect the cable (P6/J6 of Figure 4-5)

2) Remove the two screws holding the alarm assembly to the battery bracket

Reassembly is accomplished by reversing the above procedure.

NOTE: Be sure the function switch on the control panel is in the OFF position before inserting the control module into the case. If not, the fuse can be blown or damage can result.

SECTION 6

TROUBLESHOOTING

6.1 INTRODUCTION

The initial step of any troubleshooting is a thorough visual inspection to look for possible loose or open connections, shorts, dust or other obvious conditions.

Detailed troubleshooting for fault location and correction is accomplished by steps outlined in the following:

Troubleshooting Data	Table 6-1
Pad Data, Power Supply PCB	Table 6-2
Pad Location, Power Supply PCB	Figure 6-1
Pin Data, Amplifier PCB, P2/J2	Table 6-3
Pin Data, Probe Cable, P3/J3	Table 6-4
Pin Data, Alarm Cable, P6/J6	Table 6-5

Disassembly and reassembly as may be required for checking the equipment or replacing parts are described in Chapter 6.

WARNING

Turn the function switch on the control panel to the OFF position before disassembly. Otherwise high voltage of 1200 V DC will be present.

WARNING

Do not observe the light source closer than 6 inches with unprotected eyes. When necessary, observe only briefly. Continued exposure to ultraviolet energy generated by the light source can be harmful to eyesight.

WARNING

Use great care when operating the analyzer with the readout assembly outside its case due to the presence of 1200 V DC.

If, after following the steps cited in this section, the analyzer is not functioning properly, contact the HNU Service Dept. for assistance. (Phone: (617) 964-6690).

TABLE 6-1

TROUBLESHOOTING DATA

Symptom	Probable Cause	Corrective Action
1. Meter indicates low battery	a. Blown fuse (Fuse F1, 2A, 5-3)	1) Check fuse. If blown, check for evidence of shorts in wiring, then replace fuse.
	b. Bad connections	1) Check wiring connections. Resolder poor or bad connections.
	c. Broken meter movement	1) Tip instrument rapidly from side to side. Meter needle should move freely, and return to zero. If faulty, replace with new meter.
	d. Battery dead	1) Disconnect battery and check with volt-ohmmeter. Replace if dead.
	e. Battery charge low	1) Recharge battery, check meter with function switch in BATT position to ensure the charger is operating properly (see Table 2-1, BATT)
2. Low battery	a. Power supply defective	1) Check power supply voltages (see Table 6-2 and Figure 6-1). If in error, replace power supply assembly.
3. UV lamp not ON	a. High Voltage interlock (Microswitch S2) at probe cable connector on readout assembly not operating	1) Check by applying pressure to switch plunger with cable in place. Adjust the screw on side of cable connector, if required, to increase throw of switch plunger.
	b. High voltage supply out or faulty	1) Check high voltage output on power supply board (pad 22). If voltage not correct, (see Table 6-2) replace power supply board.

TABLE 6-1 cont.

	c. Lamp not making proper connection with high voltage contacts.	1) Remove lamp, clean and tighten contacts, reinstall lamp.
	d. Lamp faulty	1) Replace lamp.
	e. Short in high voltage lines	1) Check wiring from power supply board to probe cable connector (J3 pin D) to UV lamp contacts (D1). Remove any shorts.
4. Fan not running	a. Fan stuck	1) Disassemble probe and clean passages and fan by blowing out dust. To remove larger particles use cotton swab, Q-tip or equal. Use care to not damage impellor rotor or blades. For disassembly see Section 5.5.
	b. Fan connections faulty	1) Check for wiring connections at fan motor and at probe cable connector (J3 pins A and C). Repair as required.
	c. Low or dead battery	1) Check battery output (power supply board, pad 9). Recharge or replace battery as required.
	d. Fan voltage not correct	1) Check fan voltage (power supply board pads 19 and 21, probe cable pins A and C). If not correct, replace power supply board.
		2) If fan voltages correct replace fan.
5. Meter does not respond	a. Dirty or open probe connection	1) Clean and tighten or resolder connections in probe.
	b. Broken meter	1) See 1-c-1 above.
	c. Dirty or open connections to meter	1) Clean and tighten connections at meter.
	d. Low or dead battery	1) See 4-c-1 above.
	e. Blown fuse	1) See 1-a-1 above.

TABLE 6-1 cont.

6. Meter does not return to zero in STANDBY	a. Broken meter movement	1) See 1-c-1 above.
	b. Dirty or open connections to meter	1) See 5-c-1 above.
	c. Dirty or open connections in probe	1) See 5-a-1 above.
	d. Zero adjust faulty	1) Rotate zero adjust pot (see Fig. 2-1) (R50, Fig. 4.6). Check pot output at meter probe connector (J3 pins B and L). If voltage does not vary, replace zerc adjust pot.
	e. Amplifier faulty	1) Rotate zero adjust pot. Check amplifier output at probe connector (J3 pin H) or observe meter. If voltage level on meter does not respond, replace amplifier board
	f. Ion chamber shorted	1) Clean ion chamber. (see Section 5.2). Recheck for return to zero in STANDBY.
		2) Replace ion chamber.
7. Meter readings, high or low	a. Incorrect calibration	1) Recalibrate (see Section 3).
	b. Lamp dirty	1) Clean lamp (see Section 5.2)
	c. Contamination in ion chamber.	1) Clean ion chamber. (see Section 5.2)
	d. Power supply board faulty	1) Check power supply board outputs (pads 17, 20 and 22 (Table 6-2). If voltages not correct, replace power supply board.
	e. Dirty or loose connections	1) Clean or tighten connections at amplifier board, probe cable, and meter.

TABLE 6-1 cont.

8. Meter erratic, unstable or non-repeatable	a. Loose cable connection	1) Check cable connection at control panel. Observe meter. Tighten cable as required.
	b. Dirty or loose meter connections	1) Check meter connections. Clean and tighten as required.
	c. Contamination in ion chamber	1) Clean ion chamber. (see Section 5.2).
	d. Power supply board faulty	1) See 7-d-1 above.
	e. Unstable or noisy lamp	1) Observe lamp. (Important-see WARNING in Section 6.1). If operation not steady, replace lamp.
	f. Function switch in high gain, most sensitive position	1) Unstable meter operation is common with function switch in most sensitive position. Turn switch to less sensitive position if desirable.
	g. Fan not operating properly	1) Replace fan.
	h. Gas flow slow or stopped	1) See 4-a-1 above.
	i. Meter contacts dirty or loose	1) Clean and tighten contacts.
9. Drifting meter or apparent moisture sensitivity	a. Ion chamber contaminated	1) Clean ion chamber, (see Section 5.2).

TABLE 6-2

PAD DATA, POWER SUPPLY PCB

Pad No.	Signal Name	Voltage (V DC)
1	Battery positive (+)	0
2	Ground	0
3	Battery charger (+)	0
4	Low Battery Indicator	
5	Low Battery Indicator	
6	Hi-Volt Relay Disconnect	-12
7	Battery Charger (-)	-11 to -15
8	Battery Negative (-)	-11 to -15
9	Battery Negative (-)	-11 to -15
10	Hi-volt Relay Disconnect	0 or -12
11	Amplifier Signal	0 to -5
12	Signal divider for span control	"
13	" " " " "	"
14	" " " " "	"
15	" " " " "	"
16	" " " " "	"
17	Ion Chamber accelerating voltage	+180
18	Zero adjust voltage power	+18 to +21
19	Fan Motor	-10.6 V nominal (see NOTE 2)
20	Amplifier Power	-9.5 to -10.5
21	Fan Motor	-14.5 nominal (see Section 4.8)
22	UV Lamp	up to -1200 (see Section 4.8)
23	Output Signal to Meter	0 to -5
24	Battery Check Voltage	-11 to -15
25	Not Used	---
26	Signal Feedback	0 to -5
27	Ground	0
28	Ground	0
29	Not Used	---
30	Ground	0
31	Ground	0
32	Alarm set power	+10
33	Alarm set power	+7

NOTES: 1. For Pad location, see Figure 6-1.

2. Differential potential for fan motor between pads 19 and 21 will be between 2.6 and 3.6 V DC.

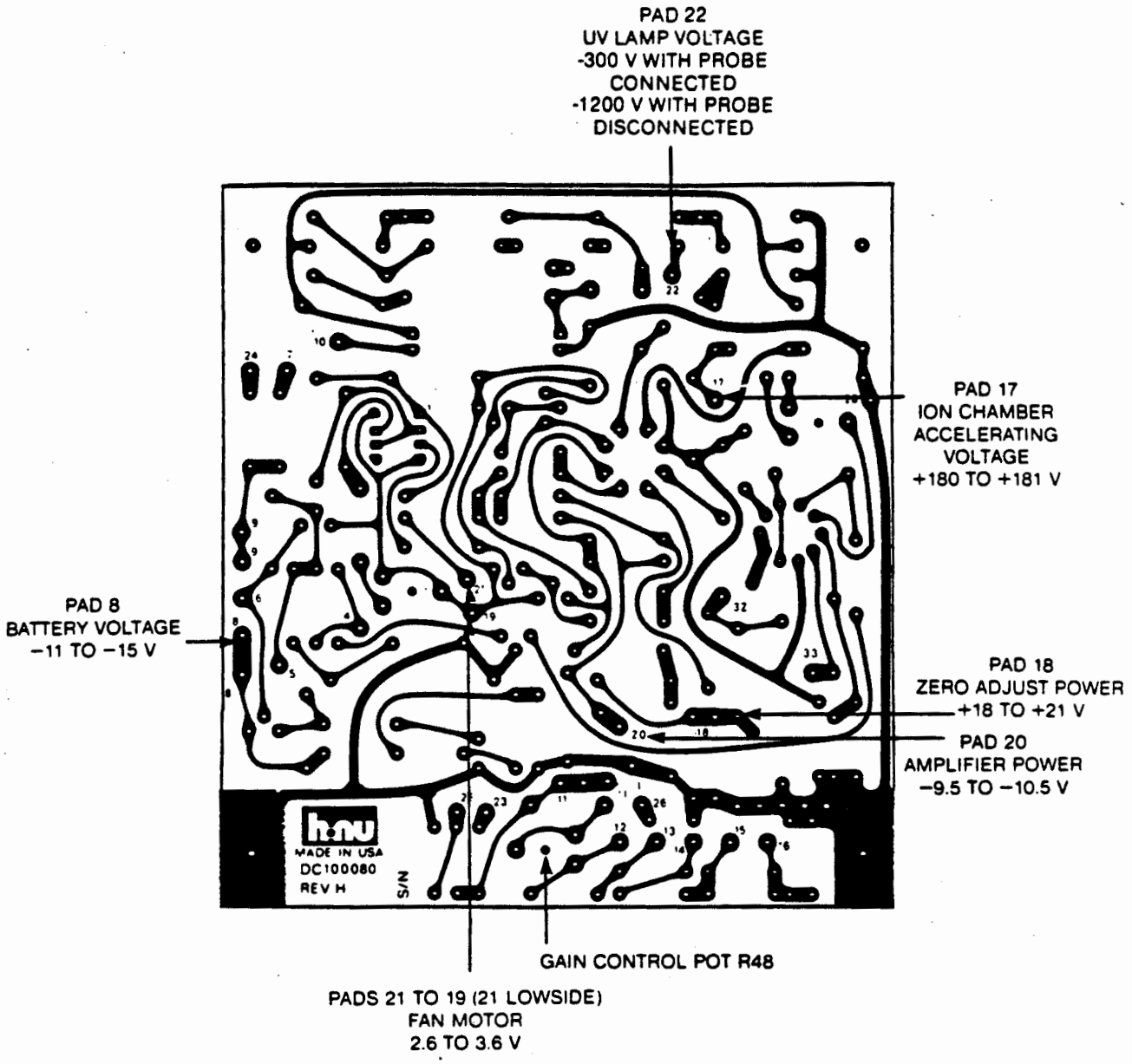

FIGURE 6–1
PAD LOCATION, POWER SUPPLY PCB

TABLE 6-3

PIN DATA, AMPLIFIER PCB, P2/J2

Pin #	Signal Name	Voltage (V DC)
A	Ground	0
B	Span Control Setting	varying
C	Zero Adjust	varying
D	Amplifier Power	-9.5 to -10.5
E	Amplifier Signal	0 to -5.0
F	Zero Adjust Voltage	+18 to +21
3	Zero Adjust Voltage	varying

TABLE 6-4

PIN DATA, PROBE CABLE, P3/J3

Pin #	Signal Name	Voltage (V DC)
A	Fan Motor	-14.5 nominal (see NOTE)
B	Zero Adjust	varying
C	Fan Motor	-10.6 nominal (see NOTE)
D	UV Lamp	up to -1200 (see Section 4.8)
E	Amplifier Signal	0 to -5.0
F	Ground	0
H	Span Control Setting	varying
J	Ground	0
K	Zero adjust Voltage	+18 to +21
L	Zero Adjust	varying
M	Ion Chamber accelerating voltage	+180
N	Amplifier Power	-9.5 to -10.5

NOTE: Differential potential for fan motor between pads 19 and 21 will be between 2.6 and 3.6 V DC.

TABLE 6-5

PIN DATA, ALARM CABLE P6/J6

Pin #	Signal Name	Voltage (V DC)
1	Alarm set pot, high end	+5.1
2	Alarm set power	+7
3	Alarm power	0 or -11 to -15
4	Alarm set	+0.02 to +5.1
5	Alarm board power	+10
6	Amplifier power	-9.5 to -10.5
7	Alarm set pot, low end	+0.023
8	Ground	0
9	Amplifier signal	0 to -5.0

SECTION 7

PARTS LISTS

7.1 INTRODUCTION

This section lists and shows the location of all parts of the Photoionization Analyzer subject to repair and replacement. When ordering parts, specify model and serial numbers as well as part number. Return all defective warranty parts to HNU Systems Inc. Obtain a Return Materials Authorization Number (RMA#) from Service Department.

TABLE 7-1

REPLACEMENT PARTS LIST

MODEL PI-101
(See Fig. 7-1)
1 2 3 4 5 6 7 8 9 10 11 12 13 14 15 16 17

Part No.	Refer to Fig. No.	Assembly
	1	Probe Handle
79-AC100004	2	Probe Shell Assembly
54-DA100049	3	Exhaust Screw
79-AC100107	4	Fan/Light Source Assembly
80-101-095	5	95 eV Replacement Lamp
80-101-102		10.2 eV Replacement Lamp
80-101-117		11.7 eV Replacement Lamp
80-101-111		10.2 eV Selected Lamp (Specify Appl.)
79-AB10008	6	fan exhaust assembly
79-AB100069	7	amplifier board
79-AC100005A1	8	ion chamber assembly, sm. aperture (3.0 mm)
79-AC100005A2		ion chamber assembly, sm. aperture gold
79-AC100005A3		ion chamber assembly, lg. aperture (6.0 mm)
79-AC100005A4		ion chamber assembly, lg. aperture gold
54-DA100053	9	End cap for probe
	10	End cap screw
79-AA10011	11	Probe extension
79-PA 10010	12, 13, 14, 15	"O" ring kit
13-67-06J-14-11P	16	12 pin connector
79-AB100187A1	17	Probe cable w/connector ($5/ft. over 3')

TABLE 7-2

REPLACEMENT PARTS LIST

MODEL PI-101
(See Fig. 7-2)
1 2 3 4 5 6 7 8 9 10 11

Part No.	Refer to Fig. No.	Assembly
25-680-402	1	Front Meter Glass
	2	
45-DA101316	3	Pot (span)
45-DA100029	4	Pot (zero)
79-AC100082	5	Power Supply Board
18-MDL-2	6	fuses, box of 12
79-AA100011	7	Battery
	8	
	9	
	10	
10-39-12	11	Grayhill switch

TABLE 7-3

REPLACEMENT PARTS LIST

MODEL PI101
(see Fig. 7-3)
1 2 3 4 5

Part No.	Refer to Fig. No.	Assembly
DB100017-1	1	Strap, neck
DB100018-1	2	Strap, waist
AC100013-A1	3	Charger, battery: 15.0 VDC, 120 V AC, 1 pH input
DC100044-1	4	Case, cover
DB100050	5	Case, readout assembly

TABLE 7-4

PARTS LIST
ACCESSORIES
(No figure is provided for this list.)

Part No.	Description
101-300	Portable Recorder Has a 2" chart width with 2"/hour chart speed. Operates on 12 v DC power from analyzer. Complete with multiconductor interface cable for battery power and signal and mounting bracket for attaching recorder to side of analyzer.
101-301	Chart Paper For portable recorder, 6 rolls.
AB100378	Multiconductor Interface Cable For recorder, contains leads for connecting recorder to analyzer.)Included in part 101-300 above)
101-350	Calibration Gas Cylinder Contains 23 liters of span gas in air (300 psi) sufficient for 40-50 calibrations. (4" diameter by 12" high).
101-351	Regulator For use with calibration cylinder, Model 101-350, complete with gauges for reading both cylinder pressure and flow.
101-500	Cleaning Compound For removing deposits from window of 9.5 or 10.2 eV lamp (not the 11.7 eV lamp.)

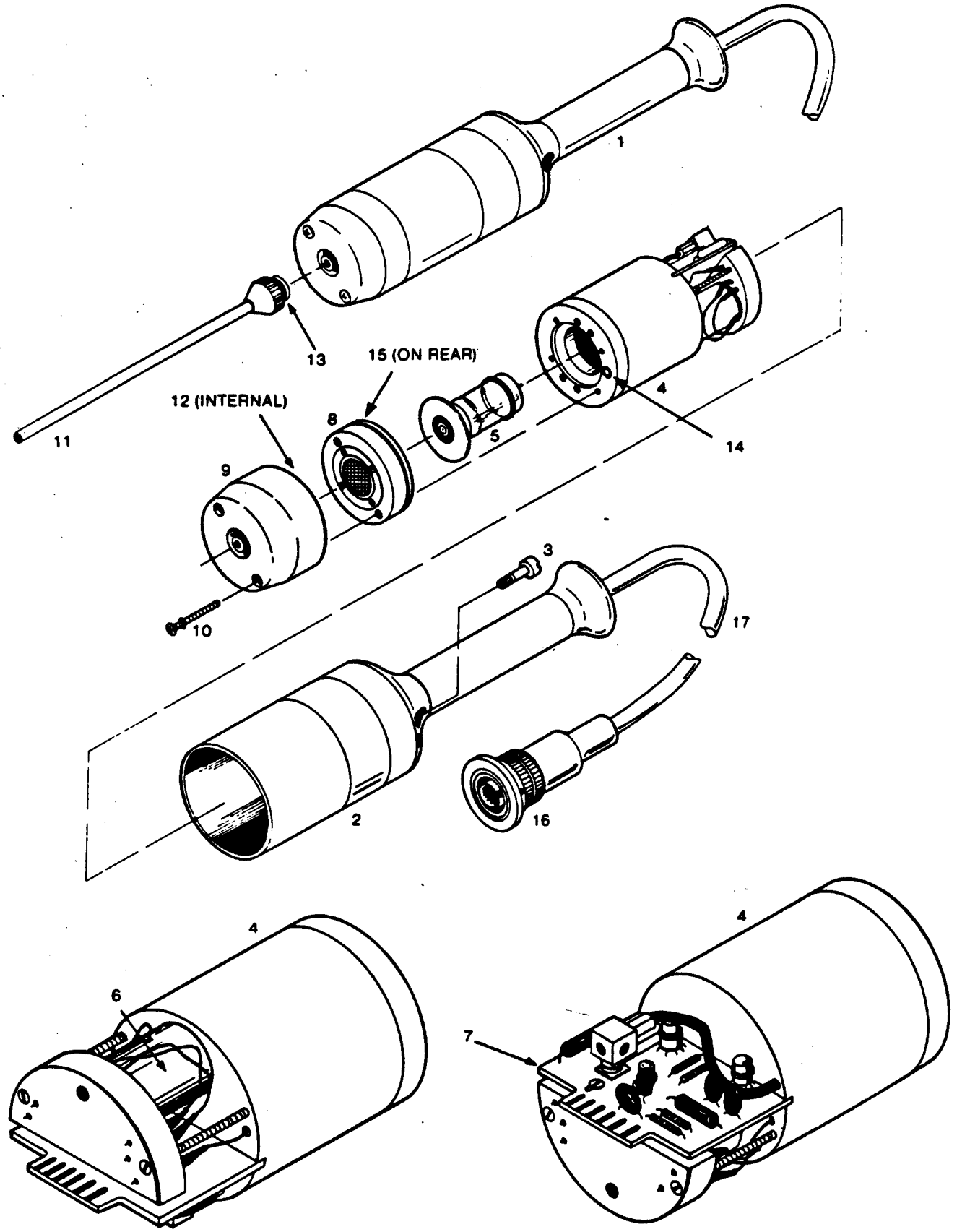

FIGURE 7-1

PARTS LOCATION, PROBE ASSEMBLY

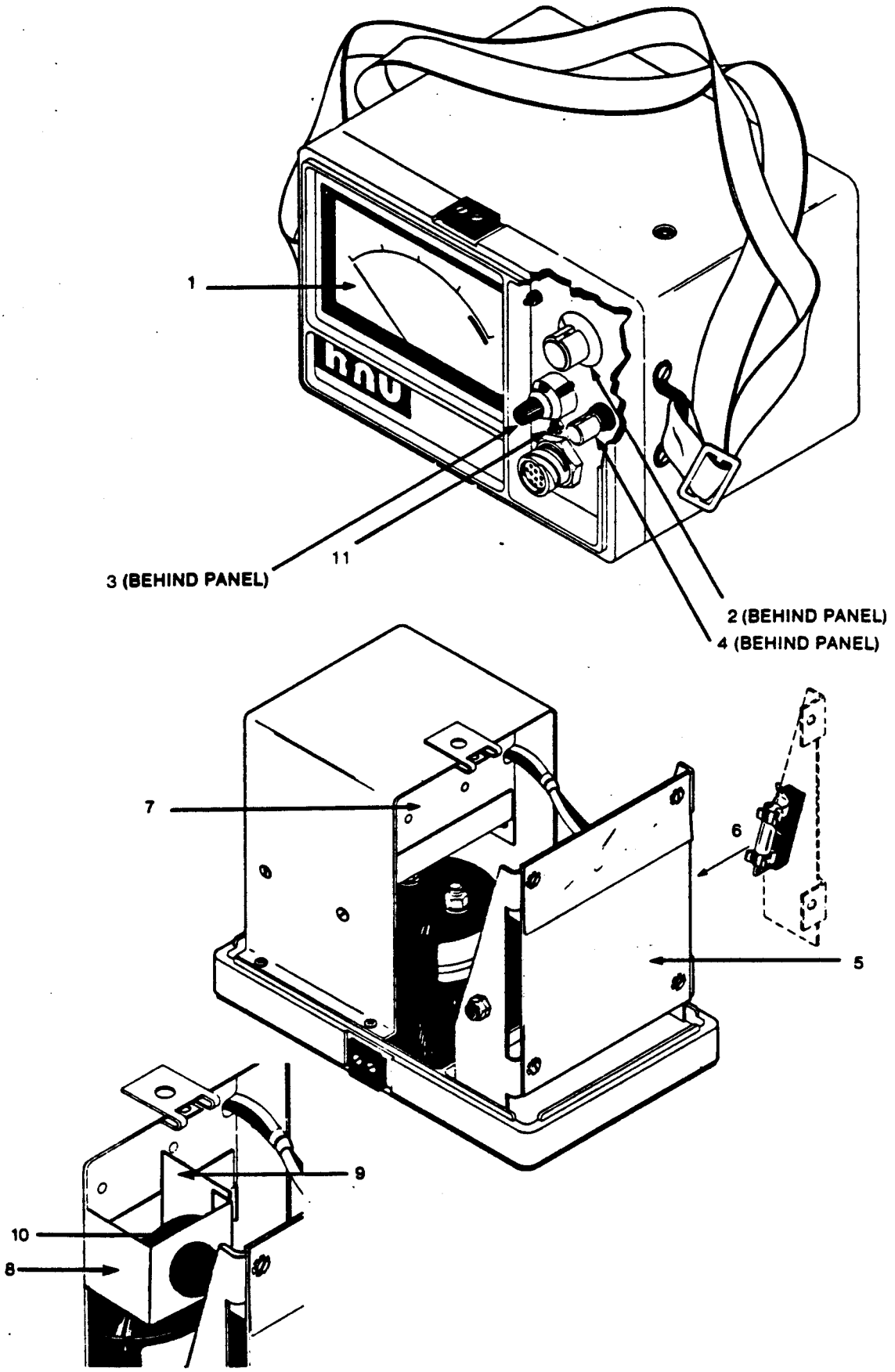

FIGURE 7-2
PARTS LOCATION, READOUT ASSEMBLY

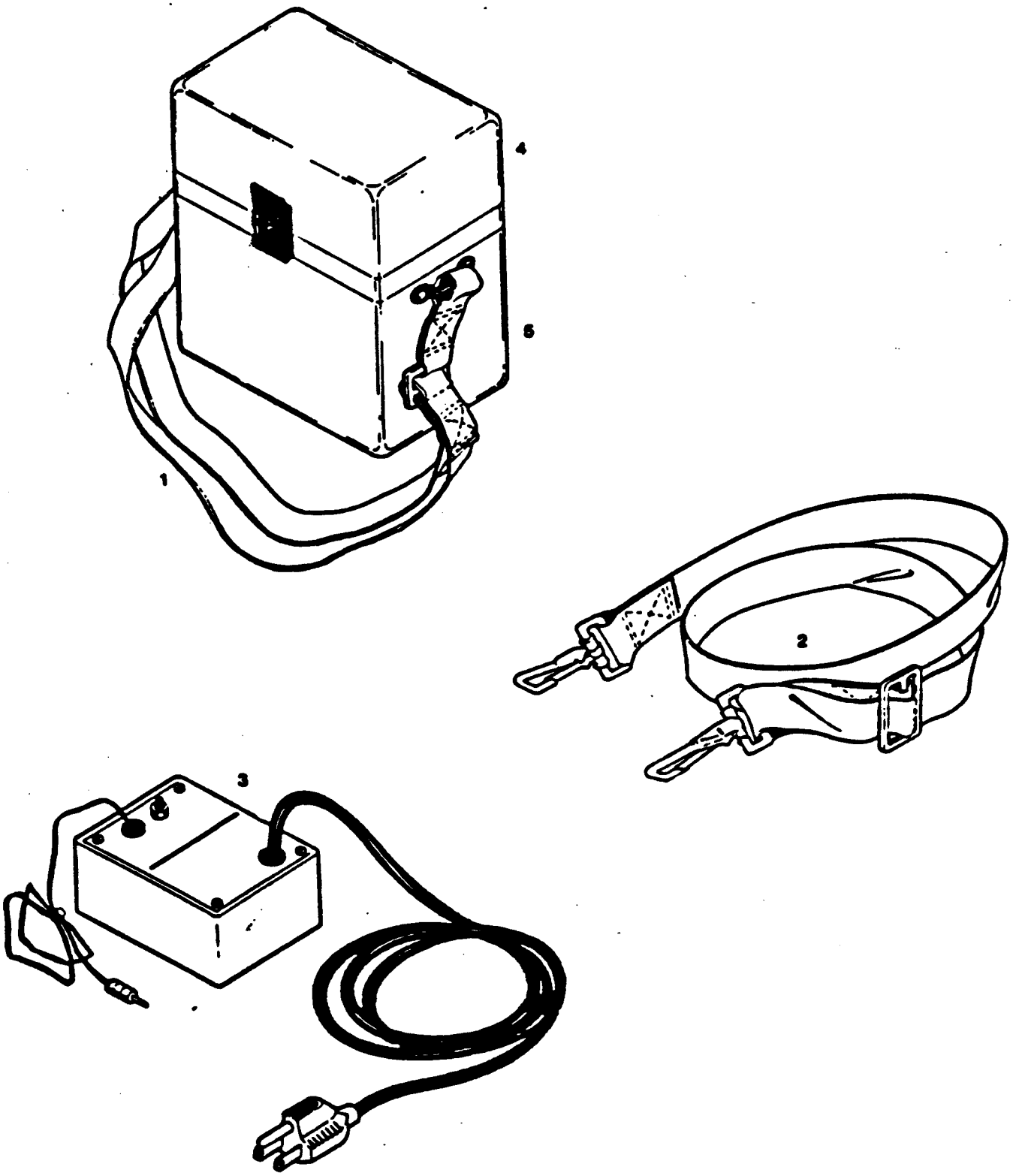

FIGURE 7-3
PARTS LOCATION, OTHER ITEMS

SECTION 8

APPENDIX

This section contains the following additional information pertinent to the PI 101 Analyzer.

Section	Subject
8.1	Static Calibration
8.2	Calibration Checking with Isobutylene
8.3	Calibration with Alternate Gas
8.4	Uncalibrated Operation
8.5	Ionization Tables
8.6	Warranty
8.7	Publications List

8.1 STATIC CALIBRATION

A technique known as static calibration is very useful when it is desired to calibrate with a particular special mixture rather than an available standard. The procedure is:

a. Select an inert container of known volume, e.g., a 4 liter Teflon bag, and clean by filling with hydrocarbon-free air and exhausting three or four times. The container and fittings should have minimal interaction with the gas to be used.

b. Fill the container with hydrocarbon-free air between samples and test with the analyzer. Repeat several times to determine the background level in the container. Correct instrument response by subtracting this background for accurate results.

c. Fill a small, inert gas-tight syringe (glass/Teflon) (e.g., 1 cc) with the desired gas and inject into the container. See the sample calculations. If the desired material is a liquid at room temperature, a smaller syringe (e.g., 1 ul or 10 ul) is used. Inject a known volume of the liquid into the container. Touch the syringe tip to the inside of the container to remove any residue droplets. A needle on the syringe is not necessary, but if one is used, it should be used throughout or delivery errors are possible.

d. Fill the container with a known volume of clean air and stopper the container. A large syringe, such as the Hamilton Model S1500 (1.5 liters) is recommended. Calibrated flowmeters may also be used. The accuracy of this calibration method is directly dependent on the accuracy used to measure the species involved.

e. Wait several minutes until the gas is well mixed or the liquid is evaporated and mixed. Check for liquid in the container before proceeding. If the liquid does not completely evaporate, the correct concentrations will not be seen in the gas phase. Warming the bag may be necessary to ensure complete evaporation.

f. Connect the probe inlet to the container making sure there are no leaks.
CAUTION: Work in a hood if hazardous gases are used.

WARNING

Be very careful to note the toxic levels and the Lower Explosive Limits for personal safety. The PI 101 is a nondestructive analyzer and must be used in a hood when calibrating with toxic or hazardous materials.

g. Allow the analyzer to sample from the container. Compression of the container by hand may be necessary since the analyzer will not sample across a pressure drop. The analyzer flow is about 100 - 200 cc/min and small changes will not effect the reading. However, the flow should be constant.

h. Observe the readings during calibration to ensure that the gas is well mixed and there are no concentration gradients within the container. This will be evident by uniform meter readings.

i. Record the reading after about 10 seconds. The reading should be stable for up to 2 minutes since the flow rate is 100 to 200 cc/min. Large fluctuations in flow could effect the readings.

j. Adjust the SPAN control to set the analyzer to be direct reading at a concentration level near the range to be used.

k. Prepare 5 or 6 different concentrations of the calibration gas and plot the instrument readings versus concentration in ppm (v/v) to obtain a calibration curve. Clean the container between each point. For spot checking the calibration, two levels close to the measured concentration which agree to within 10% are acceptable. Concentrations lower than 100 ppm of a gas can be prepared by diluting a 100 or 200 ppm level with clean air. However, do not dilute a mixture by more than a factor of 10. A bias in the calibration curve could indicate preparation/container effects, such as "hang-up" on the walls of the container at high levels resulting in lower readings. At low levels, the compound may diffuse out or evaporate off the walls resulting in higher readings. Gentle heating should alleviate this condition.

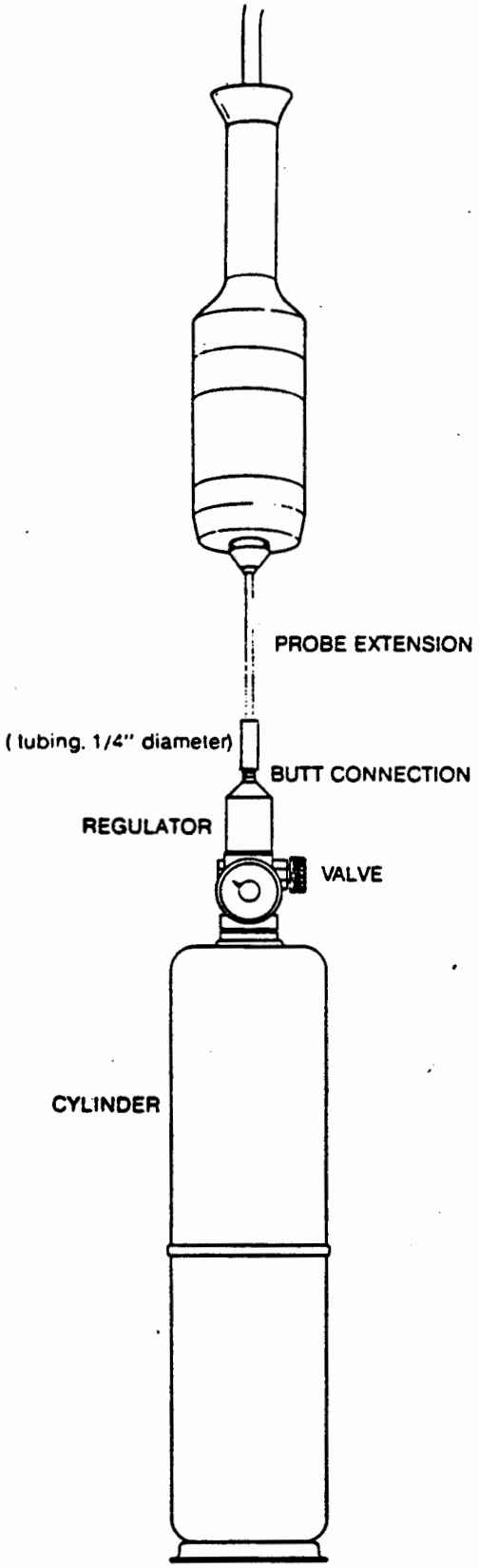

FIGURE 8-1
CALIBRATION CHECKING SET-UP

8.3 CALIBRATION WITH ALTERNATE GAS

If a calibration standard with the same trace gas as that to be measured is not available or is hazardous, it is possible to use an alternate calibration gas. (Note : This technique may not be as accurate as calibration with the species of interest.) In this case, the expected reading for calibration must be compensated for the difference between the two gases. In operation, the meter will then give a direct reading of the gas being measured.

This calibration is illustrated in the following examples: (PS = Photoionization Sensitivity. See Table 8-14)

a. Given a case in which:

1) The trace gas to be measured is Vinyl Chloride (PS = 5.0)

2) The calibration gas to be used is Isobutylene (PS = 7.0) at a 100 ppm level

What is the ppm reading to be when calibrating to give a direct reading when measuring Vinyl Chloride?

The required reading for calibration will be:

$$= \text{Isobutylene ppm} \times \frac{PS(\text{Isob})}{PS(\text{Vin Chlor})}$$

$$= 100 \times \frac{7.0}{5.0}$$

$$= 140 \text{ ppm}$$

In this example, using a calibration gas with 100 ppm of Isobutylene, adjust the SPAN control so the meter reads 140 ppm. In operation, the instrument will then give a direct reading of the ppm of Vinyl Chloride.

b. Given a case in which:

1) The trace gas to be measured is Benzene (PS = 10.0)

2) The calibration gas to be used is Isobutylene (PS = 7.0) at a level of 100 ppm

3) What is the ppm reading to be when calibrating to give a direct reading when measuring Benzene.

The required reading for calibration will be:

$$= \text{Isobutylene ppm} \times \frac{PS(Isob)}{PS(Benzene)}$$

$$= 100 \times \frac{7.0}{10.0}$$

$$= 70.0 \text{ ppm}$$

In this example, using a calibration gas with 100 ppm of Isobutylene, adjust the SPAN control so the meter reads 70 ppm. In operation, the instrument will then give a direct reading of the ppm of Benzene.

c. Given a case in which:

1) The trace gas to be measured is H2S (PS = 2.8)

2) The level of H2S for which it is to be calibrated is 60 ppm.

3) The calibration gas available is Isobutylene (PS = 7.0)

4) What ppm level of Isobutylene is required to permit direct reading of H2S, calibrating at its 60 ppm level.

The required Isobutylene level for calibration will be:

$$= \text{H2S ppm} \times \frac{PS(H2S)}{PS(Isob)}$$

$$= 60 \times \frac{2.8}{7.0}$$

$$= 24.0 \text{ ppm}$$

In this example, using a calibration gas with 24.0 ppm of Isobutylene, adjust the SPAN control so the meter reads 60 ppm. In operation, the instrument will then give a direct reading of the ppm of H2S.

Care is to be taken when working with flammable gas samples to stay below the Lower Explosive Limit (LEL) and with hazardous or toxic gases to stay below the Threshold Limit Value (TLV) safe working level.

If difficulties are encountered in calibration, the user should consult the local HNU representative.

8.4 UNCALIBRATED OPERATION

Best operation of the analyzer is accomplished by its calibration for the gas to be measured. In cases where it becomes necessary to operate with a gas for which it has not been calibrated and recalibration is not possible, correction can be made to the meter reading.

One method is by use of a chart. Figure 8-2 is such a chart. It shows performance curves for various gases being measured by an instrument with a 10.2 eV lamp and calibrated for benzene. This illustrates the effect of the different sensitivities of gases. These curves can be used directly for correcting a meter reading if the instrument is calibrated for benzene and is measuring one of the gases shown. For example, if the gas being measured is Propylene and the reading is 8 ppm, then the actual concentration is about 20 ppm.

A second method is to multiply the meter reading by a correction factor as follows:

$$\text{Actual ppm} = \text{ppm reading} \times \frac{\text{PS (Cal gas)}}{\text{PS (Trace gas)}}$$

in which

PS is the photoionization sensitivity of each of the two gases. Table 8-14 gives a list of the relative photoionization sensitivities of a number of specific gases with which the analyzer might be used. Use of this method is illustrated by the following examples:

a. Instrument calibrated for Benzene (PS = 10.0) and measuring Acetone (PS = 6.3)

$$\text{Actual ppm} = \text{ppm reading} \times \frac{10.0}{6.3}$$

$$= \text{ppm reading} \times 1.6$$

b. Instrument calibrated for Vinyl Chloride (PS = 5.0) and measuring Carbon Disulfide (PS = 7.1)

$$\text{Actual ppm} = \text{ppm reading} \times \frac{5.0}{7.1}$$

$$\doteq \text{ppm reading} \times 0.7$$

These values are valid only for an analyzer with a 10.2 eV lamp. Different sensitivities occur with 9.5 and 11.7 eV lamps.

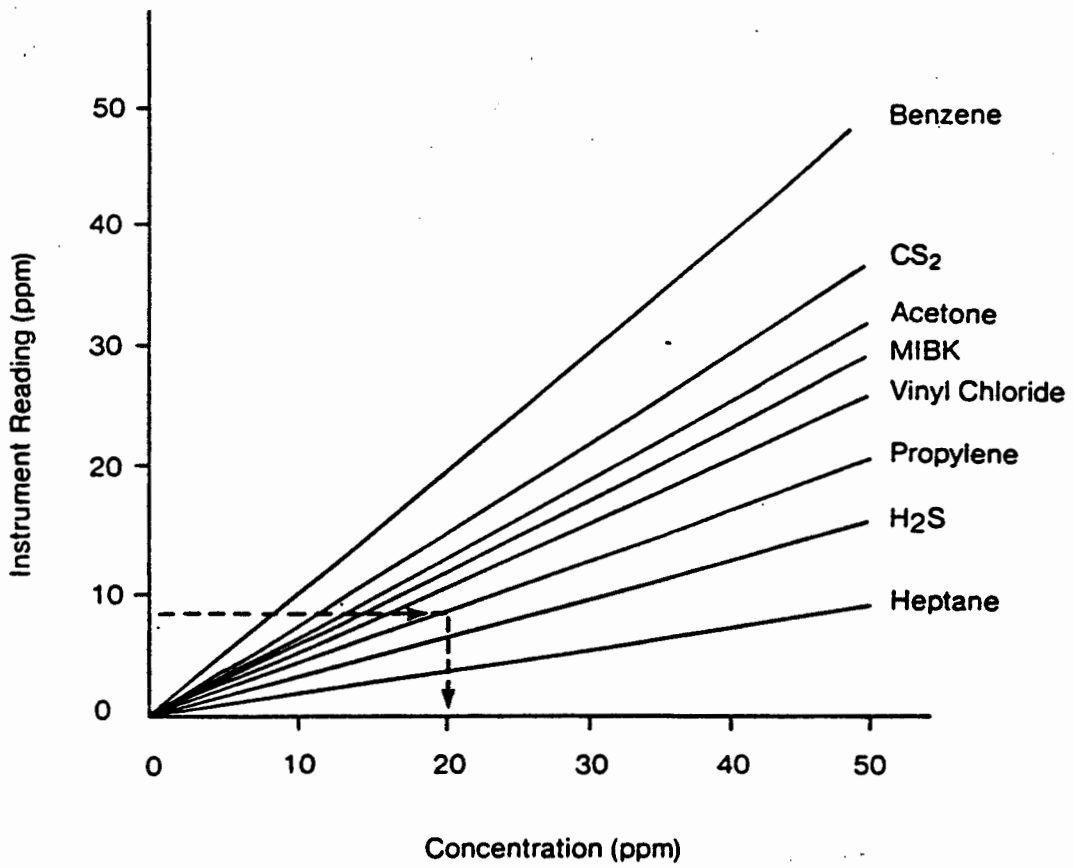

FIGURE 8-2
TYPICAL OUTPUT CURVES–
ANALYZER WITH 10.2 eV LAMP
CALIBRATED FOR BENZENE

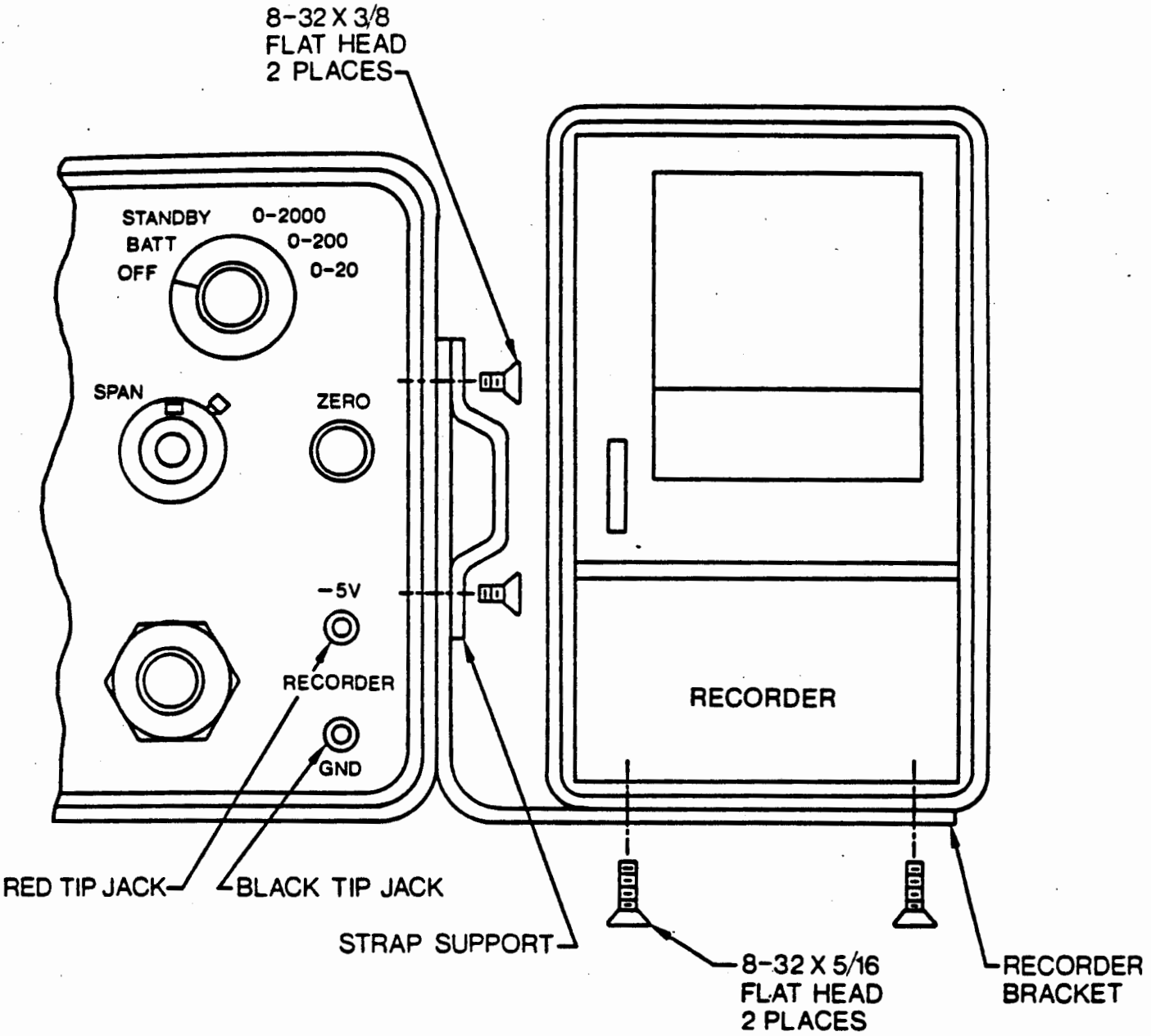

FIGURE 8-3
RECORDER MOUNTING

8.5 Ionization Tables

Ionization potentials for various atoms, molecules, and compounds are given in Tables 8-1 thru 8-13. Ionization sensitivities and approximate span settings for 10.2 eV, 11.7 eV, and 9.5 eV lamps are given in Tables 8-14, 8-15, and 8-16 respectively.

TABLE 8.1

SOME ATOMS AND SIMPLE MOLECULES

	IP (eV)		IP (eV)
H	13.595	I_2	9.28
C	11.264	HF	15.77
N	14.54	HCl	12.74
O	13.614	HBr	11.62
Si	8.149	HI	10.38
S	10.357	SO_2	12.34
F	17.42	CO_2	13.79
Cl	13.01	COS	11.18
Br	11.84	CS_2	10.08
I	10.48	N_2O	12.90
H_2	15.426	NO_2	9.78
N_2	15.580	O_3	12.80
O_2	12.075	H_2O	12.59
CO	14.01	H_2S	10.46
CN	15.13	H_2Se	9.88
NO	9.25	H_2Te	9.14
CH	11.1	HCN	13.91
OH	13.18	C_2N_2	13.8
F_2	15.7	NH_3	10.15
Cl_2	11.48	CH_3	9.840
Br_2	10.55	CH_4	12.98

TABLE 8.2

PARAFFINS AND CYCLOPARAFFINS

Molecule	IP (eV)
methane	12.98
ethane	11.65
propane	11.07
n-butane	10.63
i-butane	10.57
n-pentane	10.35
i-pentane	10.32
2, 2-dimethylpropane	10.35
n-hexane	10.18
2-methylpentane	10.12
3-methylpentane	10.08
2, 2-dimethylbutane	10.06
2, 3-dimethylbutane	10.02
n-heptane	10.08
2,2,4-trimethylpentane	9.86
cyclopropane	10.06
cyclopentane	10.53
cyclohexane	9.88
methylcyclohexane	9.85

TABLE 8.3

ALKYL HALIDES

Molecule	IP (eV)
HCl	12.74
Cl_2	11.48
CH_4	12.98
methyl chloride	11.28
dichloromethane	11.35
trichloromethane	11.42
tetrachloromethane	11.47
ethyl chloride	10.98
1,2-dichloroethane	11.12
1-chloropropane	10.82
2-chloropropane	10.78
1,2-dichloropropane	10.87
1,3-dichloropropane	10.85
1-chlorobutane	10.67
2-chlorobutane	10.65
1-chloro-2-methylpropane	10.66
2-chloro-2-methylpropane	10.61
HBr	11.62
Br_2	10.55
methyl bromide	10.53
dibromomethane	10.49
tribomomethane	10.51
CH_2BrCl	10.77
$CHBr_2Cl$	10.59
ethyl bromide	10.29
1,1-dibromoethane	10.19
1-bromo-2-chloroethane	10.63

TABLE 8.3 (continued)

Molecule	IP (eV)
1-bromopropane	10.18
2-bromopropane	10.075
1,3-dibromopropane	10.07
1-bromobutane	10.13
2-bromobutane	9.98
1-bromo-2-methylpropane	10.09
2-bromo-2-methylpropane	9.89
1-bromopentane	10.10
HI	10.38
I_2	9.28
methyl iodide	9.54
diiodomethane	9.34
ethyl iodide	9.33
1-iodopropane	9.26
2-iodopropane	9.17
1-iodobutane	9.21
2-iodobutane	9.09
1-iodo-2-methylpropane	9.18
2-iodo-2-methylpropane	9.02
1-iodopentane	9.19
F_2	15.7
HF	15.77
$CFCl_3$ (Freon 11)	11.77
CF_2Cl_2(Freon 12)	12.31
CF_3Cl (Freon 13)	12.91
$CHClF_2$ (Freon 22)	12.45
$CFBr_3$	10.67

TABLE 8.3 (continued)

Molecule	IP (eV)
CF_2Br_2	11.07
CH_3CF_2Cl (Genetron 101)	11.98
$CFCl_2CF_2Cl$	11.99
CF_3CCl_3 (Freon 113)	11.78
$CFHBrCH_2Br$	10.75
CF_2BrCH_2Br	10.83
CF_3CH_2I	10.00
n-C_3F_7I	10.36
n-$C_3F_7CH_2Cl$	11.84
n-$C_3F_7CH_2I$	9.96

TABLE 8.4

ALIPHATIC ALCOHOL, ETHER, THIOL, AND SULFIDES

Molecule	IP (eV)
H_2O	12.59
methyl alcohol	10.85
ethyl alcohol	10.48
n-propyl alcohol	10.20
i-propyl alcohol	10.16
n-butyl alcohol	10.04
dimethyl ether	10.00
diethyl ether	9.53
n-propyl ether	9.27
i-propyl ether	9.20
H_2S	10.46
methanethiol	9.440
ethanethiol	9.285
1-propanethiol	9.195
1-butanethiol	9.14
dimethyl sulfide	8.685
ethyl methyl sulfide	8.55
diethyl sulfide	8.430
di-n-propyl sulfide	8.30

TABLE 8.5

ALIPHATIC ALDEHYDES AND KETONES

Molecule	IP (eV)
CO_2	13.79
formaldehyde	10.87
acetaldehyde	10.21
propionaldehyde	9.98
n-butyraldehyde	9.86
isobutyraldehyde	9.74
n-valeraldehyde	9.82
isovaleraldehyde	9.71
acrolein	10.10
crotonaldehyde	9.73
benzaldehyde	9.53
acetone	9.69
methyl ethyl ketone	9.53
methyl n-propyl ketone	9.39
methyl i-propyl ketone	9.32
diethyl ketone	9.32
methyl n-butyl ketone	9.34
methyl i-butyl ketone	9.30
3, 3-dimethyl butanone	9.17
2-heptanone	9.33
cyclopentanone	9.26
cyclohexanone	9.14
2, 3-butanedione	9.23
2, 4-pentanedione	8.87

TABLE 8.6

ALIPHATIC ACIDS AND ESTERS

Molecule	IP (eV)
CO_2	13.79
formic acid	11.05
acetic acid	10.37
propionic acid	10.24
n-butyric acid	10.16
isobutyric acid	10.02
n-valeric acid	10.12
methyl formate	10.815
ethyl formate	10.61
n-propyl formate	10.54
n-butyl formate	10.50
isobutyl formate	10.46
methyl acetate	10.27
ethyl acetate	10.11
n-propyl acetate	10.04
isopropyl acetate	9.99
n-butyl acetate	10.01
isobutyl acetate	9.97
sec-butyl acetate	9.91
methyl propionate	10.15
ethyl propionate	10.00
methyl n-butyrate	10.07
methyl isobutyrate	9.98

TABLE 8.7

ALIPHATIC AMINES AND AMIDES

Molecule	IP (eV)
NH_3	10.15
methyl amine	8.97
ethyl amine	8.86
n-propyl amine	8.78
i-propyl amine	8.72
n-butyl amine	8.71
i-butyl amine	8.70
s-butyl amine	8.70
t-butyl amine	8.64
dimethyl amine	8.24
diethyl amine	8.01
di-n-propyl amine	7.84
di-i-propyl amine	7.73
di-n-butyl amine	7.69
trimethyl amine	7.82
triethyl amine	7.50
tri-n-propyl amine	7.23
formamide	10.25
acetamide	9.77
N-methyl acetamide	8.90
N,N-dimethyl formamide	9.12
N,N-dimethyl acetamide	8.81
N,N-diethyl formamide	8.89
N,N-diethyl acetamide	8.60

TABLE 8.8

OTHER ALIPHATIC MOLECULES WITH N ATOM

Molecule	IP (eV)
nitromethane	11.08
nitroethane	10.88
1-nitropropane	10.81
2-nitropropane	10.71
HCN	13.91
acetonitrile	12.22
propionitrile	11.84
n-butyronitrile	11.67
acrylonitrile	10.91
3-butene-nitrile	10.39
ethyl nitrate	11.22
n-propyl nitrate	
methyl thiocyanate	10.065
ethyl thiocyanate	9.89
methyl isothiocyanate	9.25
ethyl isothiocyanate	9.14

TABLE 8.9

OLEFINS, CYCLO-OLEFINS, ACETYLENES

Molecule	IP (eV)
ethylene	10.515
propylene	9.73
1-butene	9.58
2-methylpropene	9.23
trans-2-butene	9.13
cis-2-butene	9.13
1-pentene	9.50
2-methyl-1-butene	9.12
3-methyl-1-butene	9.51
3-methyl-2-butene	8.67
1-hexene	9.46
1,3-butadiene	9.07
isoprene	8.845
cyclopentene	9.01
cyclohexene	8.945
4-methylcyclohexene	8.91
4-cinylcylohexene	8.93
cyclo-octatetraene	7.99
acetylene	11.41
propyne	10.36
1-butyne	10.18

TABLE 8.10

SOME DERIVATIVES OF OLEFINS

Molecule	IP (eV)
vinyl chloride	9.995
cis-dichloroethylene	9.65
trans-dichloroethylene	9.66
trichloroethylene	9.45
tetrachloroethylene	9.32
vinyl bromide	9.80
1,2-dibromoethylene	9.45
tribromoethylene	9.27
3-chloropropene	10.04
2,3-dichloropropene	9.82
1-bromopropene	9.30
3-bromopropene	9.7
$CF_3CCl{=}CClCF_3$	10.36
$n\text{-}C_5F_{11}CF{=}CF_2$	10.48
acrolein	10.10
crotonaldehyde	9.73
mesityl oxide	9.08
vinyl methyl ether	8.93
allyl alcohol	9.67
vinyl acetate	9.19

TABLE 8.11

HETEROCYCLIC MOLECULES

Molecule	IP (eV)
furan	8.89
2-methyl furan	8.39
2-furaldehyde	9.21
tetrahydrofuran	9.54
dihydropyran	8.34
tetrahydropyran	9.26
thiophene	8.860
2-chlorothiophene	8.68
2-bromothiophene	8.63
pyrrole	8.20
pyridine	9.32
2-picoline	9.02
3-picoline	9.04
4-picoline	9.04
2,3-lutidine	8.85
2,4-lutidine	8.85
2,6-lutidine	8.85

TABLE 8.12

AROMATIC COMPOUNDS

Molecule	IP (eV)
benzene	9.245
toluene	8.82
ethyl benzene	8.76
n-propyl benzene	8.72
i-propyl benzene	8.69
n-butyl benzene	8.69
s-butyl benzene	8.68
t-butyl benzene	8.68
o-xylene	8.56
m-xylene	8.56
p-xylene	8.445
mesitylene	8.40
durene	8.025
styrene	8.47
α-methyl styrene	8.35
ethynylbenzene	8.815
napthalene	8.12
1-methylnapthalene	7.69
2-methylnapthalene	7.955
biphenyl	8.27
phenol	8.50
anisole	8.22
phenetole	8.13
benzaldehyde	9.53
acetophenone	9.27
benzenethiol	8.33
phenyl isocyanate	8.77

TABLE 8.12 (continued)

Molecule	IP (eV)
phenyl isothiocyanate	8.520
benzonitrile	9.705
nitrobenzene	9.92
aniline	7.70
fluoro-benzene	9.195
chloro-benzene	9.07
bromo-benzene	8.98
iodo-benzene	8.73
o-dichlorobenzene	9.07
m-dichlorobenzene	9.12
p-dichlorobenzene	8.94
1-chloro-2-fluorobenzene	9.155
1-chloro-3-fluorobenzene	9.21
1-bromo-4-fluorobenzene	8.99
o-fluorotoluene	8.915
m-fluorotoluene	8.915
p-fluorotoluene	8.785
o-chlorotoluene	8.83
m-chlorotoluene	8.83
p-chlorotoluene	8.70
o-bromotoluene	8.79
m-bromotoluene	8.81
p-bromotoluene	8.67
o-iodotoluene	8.62
m-iodotoluene	8.61
p-iodotoluene	8.50
benzotrifluoride	9.68
o-fluorophenol	8.66

TABLE 8.13

MISCELLANEOUS MOLECULES

Molecule	IP (eV)
ethylene oxide	10.565
propylene oxide	10.22
p-dioxane	9.13
dimethoxymethane	10.00
diethoxymethane	9.70
1,1-dimethoxyethane	9.65
propiolactone	9.70
methyl disulfide	8.46
ethyl disulfide	8.27
diethyl sulfite	9.68
thiolacetic acid	10.00
acetyl chloride	11.02
acetyl bromide	10.55
cyclo-$C_6H_{11}CF_3$	10.46
(n-C_3F_7)(CH_3)C=O	10.58
trichlorovinylsilane	10.79
$(C_2F_5)_3N$	11.7
isoprene	9.08
phosgene	11.77

TABLE 8-14

RELATIVE PHOTOIONIZATION SENSITIVITIES OF VARIOUS GASES TO A 10.2 eV LAMP

Gas	Photoionization Sensitivity (see Note 1)	Span Control Setting for Direct reading (approximate)
p-xylene	11.4	
m-xylene	11.2	
benzene	10.0 (reference standard)	9.8
toluene	10.0	
diethyl sulfide	10.0	
diethyl amine	9.9	
styrene	9.7	
trichloroethylene	8.9	8.2
carbon disulfide	7.1	
isobutylene	7.0	
acetone	6.3	
tetrahydrofuran	6.0	5.5
methyl ethyl ketone	5.7	
methyl isobutyl ketone	5.7	
cyclohexanone	5.1	
naptha (85% aromatics)	5.0	
vinyl chloride	5.0	4.3
methyl isocyanate	4.5	
iodine	4.5	
methyl mercaptan	4.3	

TABLE 8-14 cont.

dimethyl sulfide	4.3	
allyl alcohol	4.2	
propylene	4.0	3.5
mineral spirits	4.0	
2, 3-dichloropropene	4.0	
cycloexene	3.4	
crotonaldehyde	3.1	
acrolein	3.1	
methyl methacrylate	3.0	2.4
pyridine	3.0	
hydrogen sulfide	2.8	
ethylene dibromide	2.7	1.9
n-octane	2.5	
acetaldehyde oxime	2.3	
hexane	2.2	
phosphine	2.0	
heptane	1.7	
allyl chloride (3-chloropropene)	1.5	
ethylene	1.0	
isopropanol	1.0	0.1
ethylene oxide	1.0	
acetic anhydride	1.0	
alpha pinene	0.7	
dibromochloropropane	0.7	

TABLE S-14 cont.

epichlorohydrin	0.7
nitric oxide	0.6
beta pinene	0.5
citral	0.5
ammonia	0.3
acetic acid	0.1
nitrogen dioxide	0.02
methane	0.0
acetylene	0.0

NOTE 1: PPM reading when measuring 10.0 ppm of particular gas with monitor calibrated for benzene.

TABLE 8-15

RELATIVE PHOTOIONIZATION SENSITIVITIES OF VARIOUS GASES TO A 11.7 eV LAMP

Direct Gas (Approx.)	Photoionization Sensitivity (See Note 1)	Span Control Setting for Direct Reading (Approx.)
Carbon Disulfide	33.8	
Heptane	22.1	
Hexane	18.9	
Pentane	14.1	
1,2 Dichloroethane	12.9	
Benzene	12.2	5.0
MIBK	10.6	
Isobutylene	10.0 (Reference Std.)	
Toluene	10.0	
Methyl Chloride	9.8	
Methylene Chloride	9.4	
111 Trichloroethane	9.0	
Carbon Tetrachloride	9.0	
Ethylene Dichloride	9.0	
Butane	8.7	
THF	7.9	
Acrylonitrile	7.1	2.0
MEK	6.3	
Chloroform	6.0	
1,1,2,2 Tetrachloroethane	6.0	
Acetone	5.7	
Propane	5.5	
Isoproponol	4.5	
Acrolein	3.4	1.0
Ethane	3.0	
Ethanol	3.0	
Methanol	1.0	
1,1,2 Trifluoroethane	0.3	
Acetonitrile	0.1	

NOTE 1: PPM reading when measuring 10.0 ppm of particular gas with monitor calibrated for benzene.

TABLE 8-16

RELATIVE PHOTOIONIZATION SENSITIVITIES

OF VARIOUS GASES TO A 9.5 eV LAMP

Direct Gas (Approx.)	Photoionization Sensitivity (See Note 1)	Span Control Setting for Direct Reading (Approx.)
Xylene	11.2	
Benzene	10.0 (Reference Std.)	1.0
Styrene	10.0	
Toluene	10.0	
Phenol	7.7	
Aniline	3.9	
MEK	2.9	
Pyridine	2.2	
Acetone	0.65	
Methyl Methacrylate	<0.6*	
Heptane	<0.2*	
Hexane	0	
Ammonia	0	
Pentane	0	

* Commercial products containing impurities; response for pure materials is probably less.

NOTE 1: PPM reading when measuring 10.0 ppm of particular gas with monitor calibrated for benzene.

8.7 WARRANTY

HNU Systems, Incorporated, warrants all items to be free from defects in material and workmanship when used under normal operating conditions. HNU's liability hereunder shall be limited to the repair or replacement of the articles ascertained to be defective within one (1) year after date of shipment (except that the light source warranty is limited to three (3) months and does not include breakage, and battery warranty is limited to three (3) months), provided, however that the Buyer shall give notice to HNU within thirty (30) days after discovery of such defective material and provided further that all defective material be shipped prepaid to the HNU plant within a reasonable time from the date of discovery of the defect and during such warranty period. After the repair or replacement, HNU will ship the said item to Buyer, transportation charges prepaid, to any point in the United States that Buyer may designate.

THE FOREGOING IS THE SOLE EXTENT OF HNU'S WARRANTY AND NO OTHER STATEMENTS OR WARRANTIES, EXPRESSED OR IMPLIED, SHALL BE HONORED. UNDER NO CIRCUMSTANCES SHALL HNU BE SUBJECT TO ANY LIABILITY FOR SPECIAL, INCIDENTAL OR CONSEQUENTIAL DAMAGES.

8.8 Publications on Photoionization Available from HNU Systems, Inc.

101-10 Industrial Hygiene Monitoring With A Variable Selectivity Photoionization Analyzer.
J.N. Driscoll and J.H. Becker,
American Laboratory, November 1979.

101-12 Instrumentation for "On Site" Survey and Identification of Hazardous Waste.
J.N. Driscoll and G.F. Hewitt,
Industrial Hygiene News, May 1982

101-17 Instrument Calibration with Toxic and Hazardous Materials.
J.H. Becker, J.N. Driscoll, D. Renaud, P. Tiffany, C. Sylvia,
Industrial Hygiene News, July 1983.

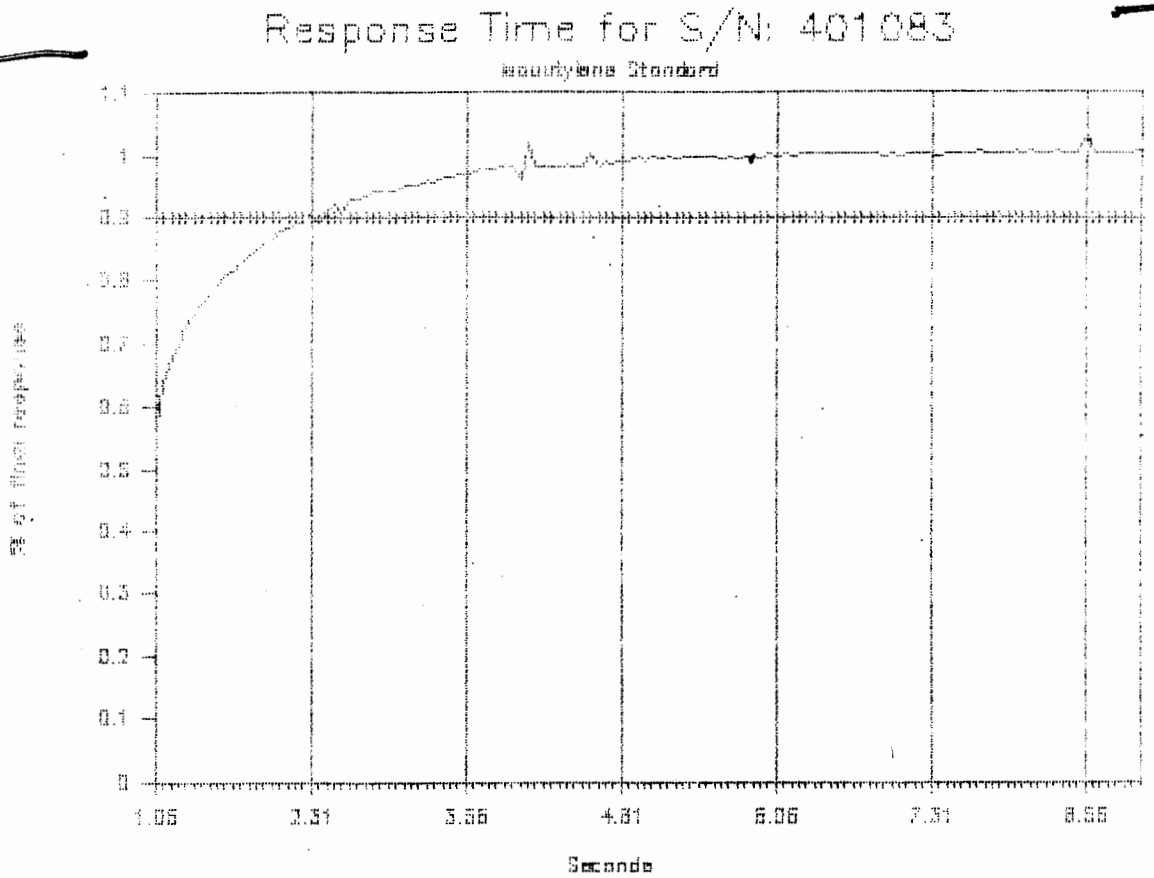

********** TECHNICAL SPECIFICATIONS REPORT **********

PI-101 TEST RESULTS

S/N: 401083

LAMP VOLTAGE	-384.45	VOLTS	LAMP TYPE:	10.2ev	
BIAS VOLTAGE	180.69	VOLTS	LAMP S/N:	7997B	
FAN VOLTAGE 1	-14.43	VOLTS	POWER SUPPLY S/N:	9094	
FAN VOLTAGE 2	-10.98	VOLTS	CHARGER S/N:	D674	
FAN VOLTAGE	3.46	VOLTS	AMP BOARD S/N:	D696	
BATTERY CHARGER	-14.44	VOLTS	BATTERY S/N:	401083	
RECORDER OUTPUT	-1.40	VOLTS	GAIN RESISTOR:	3.3meg	OHMS
POT	-0.73	VOLTS	POT VALUE	4560.84	OHMS
BATTERY	-12.33	VOLTS			
+20 VOLTS	19.38	VOLTS	TEST DATE	03/09/94	
-10 VOLTS	-10.06	VOLTS	TEST TIME	20:58:39	
RESPONSE TIME	2.25	seconds			
ISOBUTYLENE	56	ppm	DATE OF QC INSPECTION:	3-9-94	
FLOW RATE cc/min	191.71		DATE TO STOCK:		
			DATE SHIPPED:	3-6-94	

REPORT GENERATED BY HNU SYSTEMS:LOTUS/101

Gilian®

GilAir / GilAir-5
Air Sampling Systems

Instruction Manual

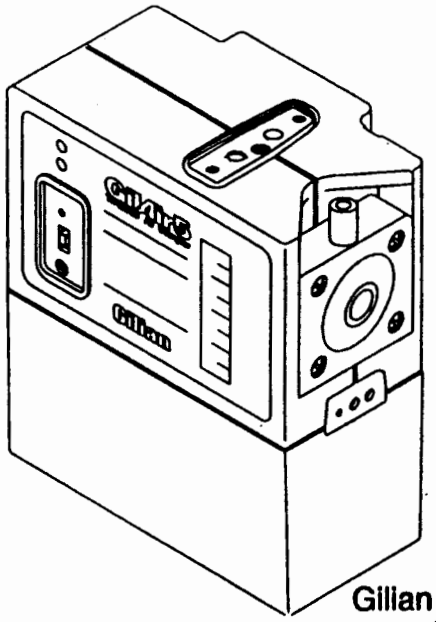

Gilian Instrument Corp.
35 Fairfield Place
W. Caldwell, NJ 07006
PH: 201-808-3355
FX: 201-808-6680

Publication FPRO-2315, Rev A

TABLE OF CONTENTS

Title	Page
Cautions/ Warranty Information--	2
Introduction--	3
Operating Specifications, GilAir/ GilAir-5--	4-5
Operating Instructions, Basic Model--	6
Getting Started	
Setting Flow	
Typical Calibration Trains, (fig. 1)--	7
Operating Instructions, Clock Timer Model--	8
Getting Started	
Typical Side Clock Timer Display, (fig. 2)--	
"Waking the Pump Up"	
Setting Flow	9
Hold/ Pause Function	
Log Sample Run Time	
Operating Instructions, Programmable Timer Model--	10
Typical Side Programmable Timer Display, (fig. 3)--	
Getting Started	
"Waking the Pump Up"	11
Setting Flow	
Hold/ Pause Function	12
Log Sample Run Time	
Programming the Pump	
Terms, Icons and User Information	13
Operating Instructions, Low Flow--	14
Description	
Constant Low Flow Module	
Constant Low Flow Module Operation	
Bag Sampling	15
Multi-Flow Module	
Multi-Flow Module Operation	
Bag Sampling	16
GilAir/ GilAir-5, General Description--	17-18
Battery and Battery Maintenance--	19-20
Charging the Battery	
Approvals/ Certification/ Quality Assurance	21

CAUTION

- Read the instruction manual prior to operating your sampling pump.
- Not following the guidelines provided in this manual may render the warranty null and void.
- Do not operate in excessive chemical or water vapor atmospheres. Failure to follow instructions may cause permanent damage to equipment.
- The GilAir and GilAir-5 Samplers employ rechargeable NiCad batteries. Prior to the initial pump operation, fully charge the battery.

LEADING CAUSES OF PUMP FAILURE OR FAULTING

- Improperly maintained batteries.
  See battery maintenance instructions.
- Dirty or blocked inlet filter.
- Unusually rough handling.
  Dropping, crushing and submerging in water.
- Running pump beyond its recommended specifications.
  Refer to the appropriate pages in this manual for flow ranges and operating instructions.

WARRANTY

- Gilian sampling pumps have a warranty for one year against any defects in parts or workmanship.
- This warranty does not include damage caused by unusually rough treatment or tampering with internal electronics.
- The warranty card must be returned to Gilian in a timely fashion.

INTRODUCTION

Congratulations! You have just purchased the finest Air Sampling Equipment in the world.

This manual contains basic operating information for the GilAir and GilAir-5 Sampling Systems. A technical manual is available upon request, that provides more detailed repair and maintenance information on these samplers.

GilAir and GilAir-5 Samplers offer high and low flow sampling capability ranging from 1cc to 3,000cc and 1cc to 5,000cc respectively. The GilAir Sampler Series includes the following Samplers and Low Flow Modules.

PRODUCT	DESCRIPTION	PART #
GilAir R	750-3000cc/min., Basic, RFI	800485-111
GilAir RC	750-3000cc/min., Clock, RFI	800508-111
GilAir RP	750-3000cc/min., Programmable, RFI	800510-111
GilAir SC	750-3000cc/min., Clock CENELEC	800508-121
GilAir RC	750-3000cc/min., clock, RFI, Australian	800508-151
GilAir-5 R	750-5000cc/min., Basic, RFI	800883-111
GilAir-5 RC	750-5000cc/min., Clock RFI	800885-111
GilAir-5 RP	750-5000cc/min., Programmable, RFI	800884-111
Module	Constant Flow, Blue	800518
Module	Multi-Flow, Blue	800519
Module	Constant Flow, Black	800518-1
Module	Multi-Flow, Black	800519-1

GilAir

OPERATING SPECIFICATIONS

Constant high flow range:	750-3,000cc/min.
Flow Control:	External flow adjust, + 5% of set-point.

Pressure Range:

Flow (LPM)	Max. "H_2O	8hr Run "H_2O
0.75	20-25	20
1	25-35	25
2.5	15-20	15
3	8-10	8

LOW FLOW OPTIONS:

Constant flow:	5-500cc/min. to 25" (64cm)H_2O
Multi-flow:	1-750cc/min., 18±3 (46+8cm)H_2O

POWER SUPPLY

Battery Pack:	4.8 volt rechargeable NiCad battery pack
Battery Pack Capacity:	1.8 Ampere Hour
Typical Recharge Time:	14-18 Hours
Battery Pack Life:	300 or more charging cycles

Size:	3-9/16" x 3-15/16" x 2" (9 cm x 10 cm x 5.1 cm)
Weight:	21 oz. (596 g)

GilAir-5

OPERATING SPECIFICATIONS

Constant high flow range:	750-5,000cc/min.
Flow Control:	External flow adjust, ± 5% of set-point.

Pressure Range:

Flow (LPM)	Max. "H_2O	8hr Run "H_2O
0.75	30-35	20
1	30-45	25
2	30-45	26
3	25-40	23
4	15-29	15
5	10-15	10

LOW FLOW OPTIONS:

Constant flow:	5-500cc/min. to 25" (64cm)H_2O
Multi-flow:	1-750cc/min., 18±3 (46+8cm)H_2O

POWER SUPPLY

Battery Pack:	6 volt rechargeable NiCad battery pack
Battery Pack Capacity:	1.8 Ampere Hour
Typical Recharge Time:	14-18 Hours
Battery Pack Life:	300 or more charging cycles

Size:	4-1/16" x 3-5/16" x 2" (10.3 cm x 10 cm x 5 cm)
Weight:	22.5 oz. (640 g)

OPERATING INSTRUCTIONS

GILAIR AND GILAIR-5
Both the GilAir and GilAir-5 are available in three (3) models.
Basic, Clock Timer, and Programmable Timer

THE BASIC MODEL

GETTING STARTED

1. Charge battery according to Battery Maintenance Instructions provided in this Manual.
2. Using a small phillips-head screwdriver, back out the holding screw of the anti-tamper cover plate to expose the on/off switch and the flow adjust screw. (On the front of the pump)
3. Switch the on/off switch to the "ON" position.

SETTING FLOW

4. Set flow by turning the flow adjust screw. (clockwise for increased flow and counter clockwise for decreased flow).
5. Use the built-in rotameter as a flow indicator only. Actual flow should be set using a Gilibrator or another flow calibrating device.
6. When calibrating your sampler for flow the sample collection device (cyclone, impinger, filter cassette or sorbent tube) should be in-line. See next page.
7. When you are satisfied that the proper flow rate has been set replace the cover plate to prevent tampering.
8. You are now ready to sample.

TYPICAL CALIBRATION TRAINS

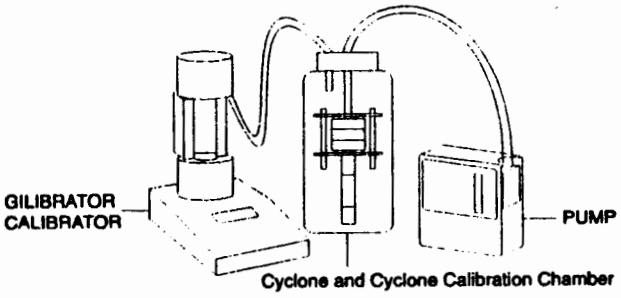

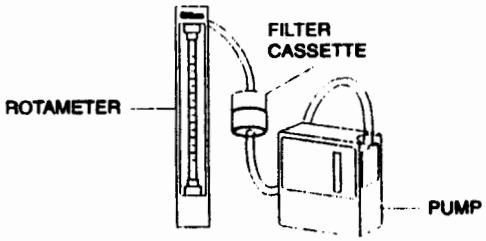

Standard Filter Cassette Sampling with Rotameter

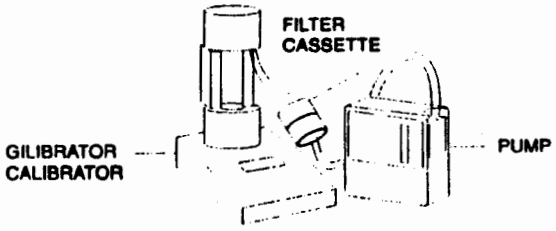

Standard Filter Cassette Sampling with Gilibrator Calibrator

CLOCK TIMER MODEL

GETTING STARTED
NOTE:
RUN/HOLD button should be pressed with a Ball Point Pen.

1. Charge battery according to Battery Maintenance Instructions provided in this Manual.

2. Using a small phillips-head screwdriver, back out the holding screws of the anti-tamper cover plates on the front and left side of the pump.
   Front cover: Exposes the on/off switch and the flow adjust screw.
   Left side cover: Exposes the clock display and the Run/Hold button.

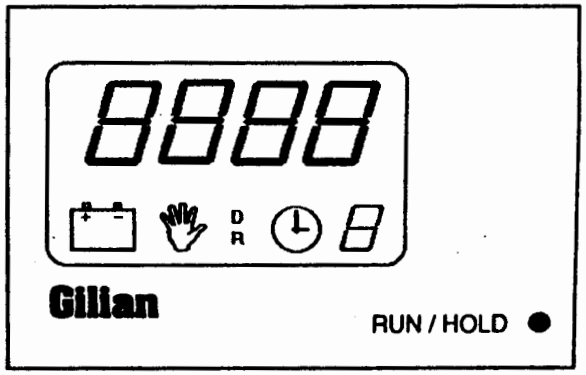

TYPICAL SIDE CLOCK TIMER DISPLAY

NOTE: The pump electronics automatically converts to the "SLEEP MODE" after five minutes of inactivity to conserve battery capacity.

WAKING THE PUMP UP
3. Using a ball point pen, press the Run/Hold button to wake the pump up.

4. "LAST" will flash on the display, followed by the last run time in minutes. The number in the bottom right corner of the display represents the percentage of the run time that the operated in a "fault" condition.

5. Make note of the last run time if necessary. It will flash for 5 minutes.

6. Pressing the Run/Hold button a second time will erase the last run time and enter the pump into a delay start mode, designated by the small "D" in the display window.

7. Switch the on/off switch to the "ON" position.

SETTING FLOW

8. Set flow by turning the flow adjust screw. (clockwise for increased flow and counter clockwise for decreased flow).

9. Use the built-in rotameter as a flow indicator only. Actual flow should be set using a Gilibrator or another flow calibrating device.

10. When calibrating your sampler for flow the sample collection device (cyclone, impinger, filter cassette or sorbent tube) should be in-line. See previous page.

11. When you are satisfied that the proper flow rate has been set turn the on/off switch to the "OFF" position. This will erase the run time accumulated while calibrating the pump for flow rate.

12. Switch the pump to the "ON" position when you are ready to sample and replace the tamper resistant covers.

THE "HOLD" OR "PAUSE" FEATURE

1. The sampling operation can be interrupted for breaks or lunch by pressing the RUN/HOLD button while the on/off switch is in the "ON" position. A flashing hand icon will appear in the display window.

2. Press the RUN/HOLD button again to resume the sampling operation.

LOG SAMPLE RUN TIME

a. Always make note of the sample run time prior to switching the pump to the "OFF" position.

b. If the pump is switched "OFF" and then back "ON" the run time will be lost.

c. When sampling in a remote location use the pause function to hold the run time until it can be properly documented.

d. If the pump is switched to the "OFF" position for longer than five minutes without being switched back on, the last run time will be stored and can be recovered by pressing the RUN/HOLD button.

THE PROGRAMMABLE TIMER MODEL

NOTE:
Programming buttons should be pressed with a Ball Point Pen.

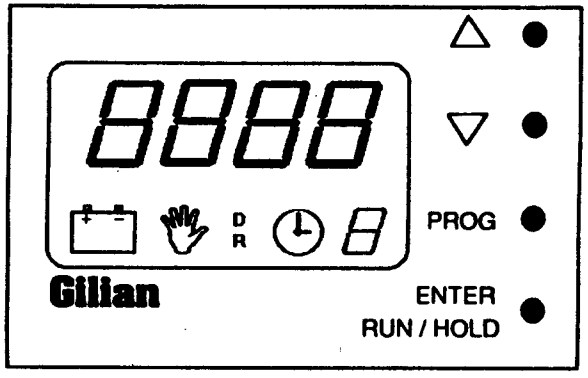

TYPICAL SIDE PROGRAMMABLE TIMER DISPLAY

BUTTON CONFIGURATION

Δ	•	"Incremental Increase"
∇	•	"Incremental Decrease"
PROG	•	"Program Select"
ENTER		"Enter Program Numbers and Pump Wake-Up"
RUN/HOLD	•	"Run/Hold and Pause"

GETTING STARTED

1. Charge battery according to Battery Maintenance Instructions provided in this Manual.

2. Using a small phillips-head screwdriver, back out the holding screws of the anti-tamper cover plates on the front and left side of the pump.
   Front cover: Exposes the on/off switch and the flow adjust screw.
   Left side cover: Exposes the clock display and the Run/Hold button.

NOTE: The pump electronics automatically converts to the "SLEEP MODE" after five minutes of inactivity to conserve battery capacity.

WAKING THE PUMP UP

3. Using a ball point pen, press the Enter Run/Hold button to wake the pump up.

4. "LAST" will flash on the display, followed by the last run time in minutes. **The number in the bottom right corner of the display represents the percentage of the run time that the operated in a "fault" condition.**

5. Make note of the last run time if necessary. It will flash for 5 minutes.

6. Pressing the Enter Run/Hold button a second time will erase the last run time and enter the pump into a delay start mode, designated by the small "D" in the display window.

7. Press the "PROG" button to verify your program selection.

8. The letters "PT" should appear in the display window. If not scroll to find the "PT" program, using the Δ or ∇ button.

9. "PT" is the basic program. If it is the desired program press the Enter Run/Hold button to accept "PT".

10. This will bring you back to the delay start mode. At this time move the on/off switch to the "ON" position.

SETTING FLOW

11. Set flow by turning the flow adjust screw. (clockwise for increased flow and counter clockwise for decreased flow).

12. Use the built-in rotameter as a flow indicator only. Actual flow should be set using a Gilibrator or another flow calibrating device.

13. When calibrating your sampler for flow the sample collection device (cyclone, impinger, filter cassette or sorbent tube) should be in-line. See previous calibration page.

14. When you are satisfied that the proper flow rate has been set turn the on/off switch to the "OFF" position. This will erase the run time accumulated while calibrating the pump for flow rate.

15. Switch the pump to the "ON" position when you are ready to sample and replace the tamper resistant covers.

THE "HOLD" OR "PAUSE" FEATURE

1. The sampling operation can be interrupted for breaks or lunch by pressing the RUN/HOLD button while the on/off switch is in the "ON" position. A flashing hand icon will appear in the display window.

2. Press the RUN/HOLD button again to resume the sampling operation.

LOG SAMPLE RUN TIME

a. Always make note of the sample run time prior to switching the pump to the "OFF" position.

b. If the pump is switched "OFF" and then back "ON" the run time will be lost.

c. When sampling in a remote location use the pause function to hold the run time until it can be properly documented.

d. If the pump is switched to the "OFF" position for longer than five minutes without being switched back on, the last run time will be stored and can be recovered by pressing the RUN/HOLD button.

PROGRAMMING THE PUMP

1. Choose one of the programs "P1"-"P7" by scrolling with the Δ ∇ buttons.

2. After selecting a program press the PROG button.

3. Set the delay start time (in minutes) with the Δ ∇ buttons, then press the PROG button.

4. Set the run time with the Δ ∇ buttons, then press the PROG button again.

5. You can preset a delay or pause at this time with the Δ ∇ buttons, then press the PROG button again.

6. Set the number of times that you would like to repeat the previous run cycle at this time. If you don't require the cycle to repeat enter 1 or 0. Press PROG.

7. This brings you back to the program selection number. Press Enter Run/Hold to accept the program information.

8. Resume at step number 10 in to set flow. You may set up to seven separate programs.

TERMS, ICONS AND USER INFORMATION:

FLASHING BATTERY
The On/Off switch is in the "OFF" position. Or, the battery requires charging.

FLASHING CLOCK
You are in the "Programming Mode" and the on/off switch is in the "OFF" position.

NON-FLASHING CLOCK
You are in the "Run Mode" with the switch turned "ON".

"D"	Initial delay prior to starting the sample.
"R"	Run Time.
"DR"	Pause between run cycles.
"C"	Cycles (the number of times you wish to repeat the run time and pause).
"PT"	Basic program for simple on/off pump operation.
"P1-P7"	Seven user defined programs.

THE SMALL NUMBER IN THE BOTTOM RIGHT CORNER OF THE DISPLAY
The percentage of time that the pump ran while it was outside of the 5% fault envelop during the sample period.

LOW FLOW OPERATION

LOW FLOW DESCRIPTION

The GilAir/GilAir-5 Sampling System offers two modes of low-flow sampling: Constant Flow and Multi-flow. In each case the appropriate module is fitted to the top of the sampler and communicates with the pump through the opening beneath the top insert plate (2-0). Both the Constant Flow and Multi-flow modules are equipped with an ON/OFF switch control (2-6) allowing these units to be functionally engaged or disengaged without physical removal from the sampler. The modules incorporate a luer taper port which is used for bag sampling.

CONSTANT LOW FLOW

The Constant Low Flow Module is suitable for sampling between 5 and 500cc/min., and will maintain a constant low flow through the sampling head (i.e. tube holder) despite changes in load--the maximum load being 25"H_2O. The device utilizes an internal pressure regulator to maintain a constant pressure drop, and hence a constant flow, through an externally adjustable flow control valve discharging to atmosphere. Since the discharge flow is maintained constant and the sampling system is otherwise closed, the inlet flow must remain constant as well. However, the flow constant in this mode is termed flow stabilized and will not activate the flow fault function should the flow deviate beyond +5%.

CONSTANT LOW FLOW MODULE OPERATION

Note: Installation or removal of any low flow module must be done in a clean environment while the sampler is turned OFF. Contamination of the air passages between the pump and the low flow module may result in a failure of the system.

Make sure the o-ring seals (2-12) of the low flow module are properly seated into the top of the pump assembly and that the mating boss (2-2) clears the case opening (2-15) prior to securing the mounting screws (2-4). Use a flat screwdriver to engage the notch in the module's ON/OFF control (2-6) as shown. With the Module in the OFF position, turn the sampler ON and adjust the flow to between 1.0 and 1.5 LPM using the flow adjust pot (2-3). Switch the Module ON and use a fine screwdriver engage the flow control valve (2-5) through the access hole. Note that the sampler's built-in rotameter will not be useful at flows below 500cc/min; an external flow measuring device, such as a Gilibrator or calibrator rotameter, must be used. The system's performance should be checked by applying a load of 20-25"H_2O and verifying that the flow recovers to within +5%. Note that at very low flow rates it may take several minutes for the flow to recover. This is perfectly normal.

BAG SAMPLING

The module is provided with an internal luer taper for bag sampling. Bag sampling is accomplished by attaching a piece of tubing from the sampling bag to the boss opposite the luer taper end (luer taper to 1/8" ID tubing). Install the luer taper fitting into the luer taper receptacle (2-7) on the top of the module. Flow is adjusted by means of the same screw valve used to set low flow. Flow measurements can be taken via the inlet boss of the pump. The unique feature of this system is that is will automatically shut the flow off when the bag has been filled. The maximum pressure within the bag is approximately 8" of water.

THE MULTI-FLOW MODULE

The Multi-flow module is suitable for multiple tube sampling between 1 and 750 cc/min and can be used in conjunction with the Gilian Universal Tube Holder System to perform multiple tube sampling. The Module's internal regulator maintains a constant pressure of approximately 18" H_2O at the sampler's inlet while allowing changes in total flow through the system. With a constant pressure in the tube holder manifold, the flow through each tube can be set independently without affecting the flow(s) through the adjacent tube(s). Total sampling tube combined flows cannot exceed 750 cc/min.

MULTI-FLOW OPERATION

The Multi-flow module is installed in the same manner as the Constant Flow Module. Once installed, set the module's ON/OFF switch (2-6) to the OFF position and adjust the sampler's flow to between 1 and 1.5 LPM. Set the module ON/OFF control to the ON position. Performance should be checked in conjunction with the test set-up. With the load valve closed, the pressure should be 18" ±3" H_2O. Open the load valve until the flow is approximately 750cc/min. The pressure should not vary more than +3" H_2O.

Once the system's performance has been checked, the Tube Holder System can be connected. Fit each sorbent tube to an appropriately sized tube Holder and connect the outlet of the Manifold to the inlet of the sample. Set the flow through each tube by adjusting the corresponding flow control valve in the Manifold. The flow through each tube should be measured with a calibrated device connected to the inlet of that tube holder. A Gilibrator or conventional bubble flow meter is preferable since the pressure drop through this type of device is negligible.

BAG SAMPLING

A unique multi-flow bag sampling capability is available in the latest version of the multi-flow module. Access to the pressure port is by means of an internal luer taper on top of the module. One or more bags may be filled by installing the luer fitting into the luer taper receptacle (2-8) located on top of the module and connecting a 1/4" tubing from the opposite end of the luer fitting (luer taper from 1/8" ID tubing) to the flow manifold.

Flow is adjusted by means of the flow control valve in the manifold. Connection to the bag is made by screwing the end fittings to the tubing housing such that the o-rings located on the shoulder of the fitting seals against the tube housing. An additional piece of 1/8" ID tubing is secured to the special fitting on the manifold which is then directed to the bag. Flow can be set via a Gilibrator or flow meter by adjusting the screw within the specific tube housing associated with the flow control valve so as to obtain the flow required. Remove the calibration equipment and connect the tubing to the bag to be filled.

GENERAL DESCRIPTION

GilAir and GilAir-5 samplers consist of a pneumatic system, an electronic control system and a rechargeable battery pack.

PNEUMATIC SYSTEM

Description	GilAir	GilAir-5
DC motor driven, single piston pump	x	
DC motor driven, dual piston pump		x
Patented pre-loaded valving system	x	x
Integral damper assembly	x	x
See-through filter housing assembly	x	x
Rotameter / flow indicator (Accuracy ± 20%)	x	x
Optional low flow capability:		
Constant Flow	x	x
Multi-Flow	x	x

INTERNAL / EXTERNAL VENT
The internal/external vent control is located on the top of your sampling pump. You may select the venting control as desired, using a screwdriver, provided with your pump. Selecting the open circle position will vent the pump's discharge external to the sampler's case (recommended for moist or corrosive sampling environments), selecting the closed circle will vent the pump's discharge internally (recommended for dust laden environments).

ELECTRONIC CONTROL SYSTEM
The GilAir and GilAir-5 share the same electronic control system. Both samplers are available in a basic model or with two optional timing functions.

FLOW CONTROL AND COMPENSATION CIRCUITRY
The GilAir and GilAir-5 are designed to maintain flow within + 5% of the initial set point while the pump is subjected to changes in load. Sensing pump load via the motor current, the system compensates for any changes by applying a proportional voltage to the motor, thereby adjusting pump speed to maintain flow.

BASIC CONTROL BOARD
GilAir and GilAir-5 samplers are equipped with a basic control board. The control board includes the flow control and compensation circuitry, and provides the following external features: On/Off switch, flow control pot, flow fault indicator, and battery charge indicator.

FLOW FAULT INDICATOR
The GilAir and GilAir-5 Flow Fault Indicator will illuminate if the pump is unable to maintain the set flow within ±5%. This can occur if the pump is operated outside its specified performance ranges, or when the battery pack has insufficient charge. After 30 to 60 seconds of continuous operation under fault conditions, the pump will stop. This delay is provided so that a momentary obstruction of flow will not result in an unnecessary shutdown of the system. For units equipped with the optional timer board, shutdown under fault will preserve the run time in the display. This allows the user to salvage the sample.

BATTERY CHARGE INDICATOR
The battery charge indicator will illuminate when the sampler is turned on and the battery pack is fully charged. Since the circuit is activated by the slight over-voltage condition common in a fully-charged battery, the indicator will normally turn off after the sampler runs for a short period of time.

OPTIONAL CLOCK TIMER
The Clock Timer model offers an elapsed time clock that includes a run-hold function to pause and resume sampling. The Clock Timer Board includes a liquid crystal display (LCD) and the run-hold set controls.

OPTIONAL PROGRAMMABLE TIMER
The Programmable model offers run-hold and delayed start functions with the capability of programming up to 7 unique sampling programs. The programmable timer board includes an LCD and set controls.

BATTERY AND BATTERY MAINTENANCE

Battery packs for Gilian Instrument personal sampling pumps are rechargeable Nickel Cadmium (NiCad) batteries. They must be fully charged and maintained properly to achieve maximum pump run time. It is incumbent upon the pump user to ensure that the battery has enough charge to complete the intended run time.

GilAir	Rechargeable NiCad Battery	4.8 Volt, 1.8 Ampere Hour
GilAir-5	Rechargeable NiCad Battery	6 Volt, 1.8 Ampere Hour

CHARGING THE BATTERY

The battery packs for the GilAir and GilAir-5 are charged through a built-in jack, on the side of the battery pack. The batteries may be charged while in place or while removed from the sampler. Note that the charging plug is polarized to prevent improper insertion. Do not short the battery terminals or the charging jack. Shorting will result in irreversible damage to the battery pack.

Gilian offers three convenient charging systems:

- SINGLE-STATION CHARGER
  A dual rate charger that can be switched from constant-rate charge to trickle charge.
- UNIVERSAL MULTI-STATION CHARGER
  A dual rate charger offering five-station timed constant-rate charging that automatically defaults to trickle charge.
- BMS MULTI-STATION CHARGER
  A five-station charger offering timed charging that defaults to trickle charge in either a constant-rate charging mode or two diagnostic modes.

NOTE:
The BMS Multi-Station Charger has a single and double discharge mode (Single Evaluation and Double Evaluation). Excessive use of these discharge/charge features will needlessly shorten battery life. We recommend use of the Double Evaluation mode for maintenance only (maximum once monthly).

CONSTANT CHARGING RATE

This is the charging system normally used for charging NiCad batteries. The charger supplies a fixed constant current to the battery. Overcharging in this mode can cause overheating, which shortens battery life.

TRICKLE CHARGE

This charging feature is used to temporarily maintain full capacity of the battery.

BATTERY LIFE

This is usually measured in charge/discharge cycles. Gilian battery packs are capable of providing between 300 and 500 charging cycles. Since this is very difficult to track over the life of the battery, the following guide will help you to anticipate how long your battery should last.

PUMP USAGE	# HRS. OF SAMPLING WEEKLY	EST. BATTERY LIFE
High	40-60	1-1.5 yrs.
Medium	20-39	1.5-2.5 yrs.
Low*	<20	>2.5 yrs.

*Inactivity, for extended periods, may shorten the life of a NiCad battery.

The estimated battery life is based on proper battery maintenance. The best way to ensure maximum battery life is to track daily pump usage and only charge the battery pack when necessary.

MEMORY EFFECT

NiCad Batteries will develop reduced capacity when the user does not maintain the practice of discharging or charging fully during the sampling process. Memory Effect takes time to develop and usually can be eliminated with two discharge/charge cycles (Double Evaluation mode on the BMS Charger).

LEAKAGE CURRENT

NiCad Batteries always have a small internal leakage current. If the battery pack has been removed from the charger for more than two days without use, it will require additional charging to restore it to full capacity. This process can be repeated two or three times without causing signs of memory effect.

APPROVALS AND CERTIFICATIONS:

UL Listing (Underwriters Laboratory Inc., USA)
UL listed for intrinsically safe for use in hazardous locations: Class I Groups A, B, C, D, Class II E, F, G and Class III.

MSHA (Mine Safety and Health Administration, USA)
MSHA tested and certified for intrinsic safety in Methane - air mixtures only.

QUALITY ASSURANCE:

ISO 9002 (International Standards Organization) This internationally recognized quality standard specifies management and production procedures to assure satisfaction in all Gilian Products and services. Gilian Instrument Corp. has been thoroughly inspected by an independent registrar and awarded the ISO 9002 Certification.

CHAPTER 1
PERSONAL SAMPLING FOR AIR CONTAMINANTS

A. GENERAL

1. Unnecessary air sampling can tie up laboratory resources and produce delays in reporting results of necessary sampling. Evaluate the potential for employee overexposure through observation and screening samples before any partial or full-shi air sampling is conducted. Do not overexpose the employee to gather a sample.

2. Screening with portable monitors, gravimetric sampling, or detector tubes can be used to evaluate the following:

   a. Processes, such as electronic soldering.

   b. Exposures to substances with exceptionally high PELs (Permissible Exposure Limits) in relatively dust-free atmospheres, e.g., ferric oxide and aluminum oxide.

   c. Intermittent processes with substances without STELs (Short Term Exposure Limits)

   d. Engineering controls, work practices, or isolation of process.

   e. The need for CSHO protection

3. Take a sufficient number of samples to obtain a representative estimate of exposure. Contaminant concentrations vary seasonally, with weather, with production levels, and in a single location or job class.

4. The number of samples taken depends on the error of measurement and differences in results. Consult the NIOSH Occupational Exposure Sampling Strategy Manual for further information.

5. If the employer has conducted air sampling and monitoring in the past, review the records.

6. Bulk Samples are often required to assist the Salt Lake City Lab in the proper analysis of field samples. (See the Sample Shipping and Handling Chapter.) Some contaminants which fall into these categories include:

   - silica,
   - portland cement,
   - asbestos

- mineral oil and oil mist,
- chlorodiphenyl,
- hydrogenated terphenyls,
- chlorinated camphene
- fugitive grain dust
- explosibility testing.

B. GENERAL SAMPLING PROCEDURES

1. Screen the sampling area using detector tubes, if appropriate. Determine the appropriate sampling technique (see Section C and the Chemical Information Manual). Prepare and calibrate the equipment and prepare the filter media (Section F).

2. Select the employee to be sampled and discuss the purpose of the sampling. Inform the employee when and where the equipment will be removed. Stress the importance of not removing or tampering with the sampling equipment. Turn off or remove sampling pumps before an employee leaves a potentially contaminated area (such as when he/she goes to lunch or on a break).

3. Instruct the employee to notify the supervisor or the CSHO if the sampler requires temporary removal.

4. Place the sampling equipment on the employee so that it does not interfere with work performance.

5. Attach the collection device (filter cassette, charcoal tube, etc.) to the shirt collar or as close as practical to the nose and mouth of the employee, i.e., in a hemisphere forward of the shoulders with a radius of approximately 6 to 9 inches. The inlet should always be in a downward vertical position to avoid gross contamination. Position the excess tubing so as not to interfere with the work of the employee.

6. Turn on the pump and record the starting time.

7. Observe the pump operation for a short time after starting to make sure it is operating correctly.

8. Record the information required by the Air Sampling Data Form (OSHA 91A).

9. Check pump status every two hours. More frequent checks may be necessary with heavy filter loading. Ensure that the sampler is still assembled properly and that the hose has not become pinched or detached from the cassette or the pump. For filters, observe for symmetrical deposition, finger prints, or large particles, etc. Record the flow rate.

10. Periodically monitor the employee throughout the work day to ensure that sample integrity is maintained and cyclical activiti and work practices are identified.

11. Take photographs, as appropriate, and detailed notes concerning visible airborne contaminants, work practices, potential interferences, movements, and other conditions to assist in determining appropriate engineering controls.

12. Prepare a blank(s) during the sample period for each type of sample collected. See the Sample Shipping and Handling Chapter. For any given analysis, one blank will suffice for up to 20 samples collected, except for asbestos which requires a minimum of two field blanks.. These blanks may include opened but unused charcoal tubes, and so forth.

13. Before removing the pump at the end of the sample period, check the flow rate to ensure that the rotameter ball is still at the calibrated mark (if there is a pump rotameter). If the ball is no longer at the mark, record the pump rotameter reading.

14. Turn off the pump and record the ending time.

15. Remove the collection device from the pump and seal it with an OSHA-21 as soon as possible. The seal should be attached across sample inlet and outlet so that tampering is not possible. (See <Figures 1-1a> and <Figure 1-1b>.)

16. Prepare the samples for mailing to the Salt Lake City Analytical Laboratory (SLCAL) for analysis. (See Chapter 9.)

17. Recalibrate pumps after each day of sampling (before charging).

18. For unusual sampling conditions, such as wide temperature and pressure differences from the calibration conditions, call the regional technical support section.

C. SAMPLING TECHNIQUES

1. Detector Tubes

   a. Each pump should be leak-tested before use.

   b. Calibrate the detector tube pump for proper volume at least quarterly or after 100 tubes. (See Appendix 1-A.)

2. Total Dust and Metal Fume

   a. Collect total dust on a pre-weighed, low-ash polyvinyl chloride filter at a flow rate of about 2 liters per minute (lpm), depending on the rate required to prevent overloading.

   b. Collect metal fumes on a 0.8 micron mixed cellulose ester filter at a flow rate of approximately 1.5 lpm, not to exceed 2.0 lpm. When the gravimetric weight needs to be determined for welding fumes, collect these fumes on a low ash polyvinyl chloride filter.

c. Take care to avoid any overloading of the filter, as evidenced by any loose particulate.

d. Calibrate personal sampling pumps before and after each day of sampling, using a bubble meter method (electronic or mechanical) or the precision rotameter method (that has been calibrated against a bubble meter), as described in Section E.

e. Weigh PVC filters before and after taking the sample. See Section F.

3. Respirable Dust

a. Collect respirable dust using a clean cyclone equipped with a pre-weighed low-ash polyvinyl chloride filter at a flow rate of 1.7 +/- 0.2 Lpm.

b. Collect silica only as a respirable dust. A bulk sample should be submitted to the Salt Lake City Analytical Laboratory.

c. All filters used shall be pre-weighed and post-weighed.

d. Calibration Procedures

1) Do the calibration at the pressure and temperature where sampling is to be conducted.

2) For respirable dust sampling using a cyclone or for total dust sampling using an open face filter cassette, set up calibration apparatus as shown in <Figure 1-10>.

3) Place the open face filter cassette or cyclone assembly i a 1 liter jar. The jar is provided with a special cover

4) Connect the tubing from the electronic bubble meter to th inlet of the jar.

5) Connect the tubing from the outlet of the cyclone holder assembly or from the filter cassette to the outlet of the jar and then to the sampling pump.

6) Calibrate the pump. The calibration readings must be within 5% of each other.

e. Cyclone cleaning

1) Unscrew the grit pot from the cyclone. Empty the grit po by turning it upside down and tapping it gently on a soli surface.

2) Clean the cyclone thoroughly and gently after each use in

warm soapy water or, preferably, wash in an ultrasonic ba Rinse thoroughly in clean water, shake off excess water, set aside to dry before reassembly. Never insert anythin into the cyclone during cleaning. See <Figure 1-2>.

3) Inspect the cyclone parts for signs of wear or damage, su as scoring, rifling, or a loose coupler. Replace the uni or parts if they appear damaged.

4) Leak test the cyclone at least once a month with regular usage.

5) Detailed instructions on leak testing are available from the Directorate of Technical Support.

4. Organic Vapors and Gases

a. Organic vapors and gases may be collected on activated charcoal, silica gel, or other adsorption tubes using low flow pumps.

b. Immediately before sampling, break off the ends of the charcoal tube so as to provide an opening approximately one half the internal diameter of the tube. Wear eye protection when breaking ends. Use tube holders, if available, to minimize the hazards of broken glass. Do not use the charging inlet or the exhaust outlet of the pump to break the ends of the charcoal tubes. See <Figure 1-3>, charcoal tube.

c. Use the smaller section of the charcoal tube as a back-up and position it near the sampling pump. The charcoal tube shall be held or attached in an approximately vertical position with the inlet either up or down during sampling.

d. Draw the air to be sampled directly into the inlet of the charcoal tube. This air is not to be passed through any hose or tubing before entering the charcoal tube.

e. Cap the charcoal tube with the supplied plastic caps immediately after sampling and seal with an OSHA-21 as soon as possible. (See <Figure 1-4a> and <Figure 1-4b>, C-tube seal.) Do not ship with bulk material.

f. For other adsorption tubes, follow the same procedures as those for the charcoal tube, with the following exceptions:

1) Tubes may be furnished by SLCAL with either caps or flame sealed glass ends. If using the capped version, simply uncap during the sampling period and recap at the end of the sampling period.

2) The ends of the flame-sealed glass tubes are broken at th beginning of the sampling period and capped at the end of

the sampling period.

g. For organic vapors and gases, low flow pumps are required. Refer to the Chemical Information Manual to determine the appropriate flow rates recommended for specific chemicals.

h. With sorbent tubes, flow rates may have to be lowered or smaller air volumes (1/2 the maximum) used when there is high humidity (above 90%) in the sampling area or relatively high concentrations of other organic vapors.

i. Calibration Procedures

1) Set up the calibration apparatus as shown in <Figure 1-9> replacing the cassette with the solid sorbent tube to be used in the sampling (e.g., charcoal, silica gel, etc.). If a sampling protocol requires the use of two charcoal tubes, then the calibration train must include two charco tubes. The air flow must be in the direction of the arro on the tube.

2) Calibrate the pump.

5. Midget Impingers/Bubblers

a. Method

1) Take care in preparing bubblers and impingers to see that frits or tips are not damaged and that joints can be securely tightened.

2) Rinse the impinger/bubbler, <Figure 1-5>, with the appropriate reagent (see the Chemical Information Manual and Appendix 1-D). Then, add the specified amount of this reagent to the impinger flask either in the office or at the sampling location. If flasks containing the reagent are transported, caps must be placed on the impinger stem and side arm. To prevent overflowing, do not add over 10 milliliters of liquid to the midget impingers.

3) Collect contaminants in an impinger at a maximum flow rat of 1.0 lpm. Contact the SLCAL prior to collecting sample for dust counting.

4) The impinger may either be hand held by the industrial hygienist or attached to the employee's clothing using an impinger holster. In either case, it is very important t the impinger does not tilt, causing the reagent to flow d the side arm to the hose and into the pump.

NOTE: Attach a trap in line to the pump, if possible.

5) In some instances, it will be necessary to add additional reagent during the sampling period to prevent the amount

reagent from dropping below one-half of the original amou

6) After sampling, remove the glass stopper and stem from th impinger flask.

7) Rinse the absorbing solution adhering to the outside and inside of the stem directly into the impinger flask with small amount (1 or 2 ml.) of the sampling reagent. Stopp the flask tightly with the plastic cap provided or pour t contents of the flask into a 20 cc. glass bottle. Rinse flask with a small amount (1 or 2 ml.) of the reagent and pour the rinse solution into the bottle. Tape the cap sh to prevent it from coming loose due to vibration. If electrical tape is used, do not stretch tape since it wil contract and loosen cap.

b. Calibration Procedure

1) Set up the calibration apparatus as shown in <Figure 1-9> replacing the cassette with the impinger/bubbler filled w the amount of liquid reagent specified in the sampling method. (Refer to Chemical Information Manual.)

2) Connect the tubing from the electronic bubble meter to th inlet of the impinger/bubbler.

3) Connect the outlet of the impinger/bubbler to the tubing the pump.

4) Calibrate the pump at a maximum flow rate of 1.0 lpm.

6. Mailing

Mail bulks and air samples separately to avoid cross contamination. Pack the samples securely to avoid any rattle or shock damage (do not use expanded polystyree packing. Use bubble sheeting as packing. Put identifying paperwork in every package. Do not send samples in plastic bags or in envelopes. Use OSHA Form 91A. PRINT LEGIBLY ON ALL FORMS. See Chapter 9.

7. Vapor Badges

a. Passive diffusion sorbent badges, <Figure 1-6>, are useful for screening and monitoring certain chemical exposures, especially vapors and gases. Few badges have been validated for use in compliance.

b. Badges are available from the SLCAL to detect mercury, nitrous oxides, ethylene oxide, formaldehyde, etc.

c. Interfering substances should be noted.

D. SPECIAL SAMPLING PROCEDURES

1. Asbestos

   a. Collect asbestos on a special 0.8 micrometer pore size, 25 mm diameter mixed cellulose ester filter, using a back up pad.

   b. Use fully conductive cassette with conductive extension cowl, <Figure 1-7>.

   c. Sample open face in worker's breathing zone.

   d. Assure that the bottom joint (between the extension and the conical black piece) of the cassette is sealed tightly with a shrink band or electrical tape. Point the open end of the cassette down to minimize contamination.

   e. Use a flow rate in the range of 0.5 to 2.5 liters per minute. One liter per minute is suggested for general sampling. Office environments allow flow rates of up to 2.5 lpm. Calibrate pump before and after sampling. Calibration may be done either as in <Figure 1-9> or <Figure 1-10>. Do not use nylon or stainless steel adaptors if in-line (Figure 1-9) calibration is done.

   f. Sample for as long a time as possible without overloading (obscuring) the filter.

   g. Submit 10% blanks, with a minimum in all cases of 2 blanks.

   h. Where possible, collect and submit to the SLCAL a bulk sample of the material suspected to be in the air.

   i. Mail bulks and air samples separately to avoid cross contamination. Pack the samples securely to avoid any rattle or shock damage (do not use expanded polystyrene packing). Use bubble sheeting as packing. Put identifying paperwork in every package. Do not send samples in plastic bags or in envelopes. Use OSHA Form 91A. PRINT LEGIBLY ON ALL FORMS.

   j. Instruct the employee to avoid knocking the cassette and to avoid using a compressed air source that might dislodge the sample.

   k. This procedure has been revised as of May, 1989. For exceptional sampling conditions or high flow rates, contact the SLCAL. More detailed instructions can be obtained from SLCAL.

2. Sampling for welding fumes

   a. When sampling for welding fumes, the filter cassette must be placed inside the welding helmet to achieve an accurate

characterization of the employee"s exposure.

b. Welding fume samples are normally taken using 37-mm filters and cassettes; however, if these cassettes will not fit inside the helmet, 25-mm filters and cassettes can be used. Care must be taken not to overload the 25-mm. cassette when sampling.

c. The Assistant Regional Administrator for Technical Support should be consulted in the case of any technical difficulties.

E. EQUIPMENT PREPARATION AND CALIBRATION

1. Replace alkaline batteries frequently (once a month). Also carry fresh replacement batteries with the equipment.

2. Check the rechargeable Ni Cad batteries in older pumps under load (e.g., turn pump on and check voltage at charging jack) before use.

3. Calibrate personal sampling pumps before and after each day of sampling, using either the electronic bubble meter method or the precision rotameter method (that has been calibrated against a bubble meter).

4. Electronic Flow Calibrators

   a. These units are high accuracy electronic bubble flowmeters that provide instantaneous air flow readings and a cumulative averaging of multiple samples. These calibrators measure the flow rate of gases and present the results as volume per unit of time.

   b. These calibrators should be used to calibrate all air sampling pumps.

   c. See Appendix 1-A for more details on this piece of equipment.

5. When a sampling train requires an unusual combination of sampling media (e.g., glass fiber filter preceding impinger), the same media/devices should be in line during calibration.

   a. Electronic Bubble Meter Method

      1) Allow the pump to run 5 minutes prior to voltage check an calibration.

      2) Assemble the polystyrene cassette filter holder, using th appropriate filter for the sampling method. Compress cassette by using a mechanical press or other means of applying pressure. Use shrink tape around cassette to co joints and prevent leakage. If a cassette adaptor is use

care should be taken to ensure that it does not come in contact with the back-up pad.

NOTE: When calibrating with a bubble meter, the use of casset adaptors can cause moderate to severe pressure drop at flow rates in the sampling train, which will affect the calibration result. If adaptors are used for sampling, then they should be used when calibrating.

CAUTION: Nylon adapters can restrict air flow due to plugging over time. Stainless steel adapters are preferred.

3) Connect the collection device, tubing, pump and calibrati apparatus as shown in <Figure 1-9> and <Figure 1-10>, cassette and cyclone samplers, respectively.

4) A visual inspection should be made of all Tygon tubing connections.

5) Wet the inside of the electronic flow cell with the suppl soap solution by pushing on the button several times.

6) Turn on the pump and adjust the pump rotameter, if available, to the appropriate flow rate setting.

7) Press the button on the electronic bubble meter. Visuall capture a single bubble and electronically time the bubbl The accompanying printer will automatically record the calibration reading in liters per minute.

8) Repeat step 7 until two readings are within 5%.

9) While the pump is still running, adjust the pump, if necessary.

10) Repeat the procedures described above for all pumps to be used for sampling. The same cassette and filter may be used for calibrations involving the same sampling method.

b. Precision Rotameter Method. The precision rotameter, <Figure 1-11> is a secondary calibration device. If it is t be used in place of a primary device such as a bubble meter, care must be taken to ensure that any introduced error will be minimal and noted.

1) Replacing the Bubble Meter. The precision rotameter may used for calibrating the personal sampling pump in lieu o a bubble meter provided it is:

a) Calibrated with an electronic bubble meter or a bubble meter, as described in Appendix 1-C, on a regular basi (at least monthly).

b) Disassembled, cleaned as necessary, and recalibrated.

should be used with care to avoid dirt and dust contamination which may affect the flow.

c) Not used at substantially different temperature and/or pressure from those conditions present when the rotame was calibrated against the primary source.

d) Used such that pressure drop across it is minimal.

2) Unusual conditions. If altitude or temperature at the sampling site are substantially different from the calibration site, it is necessary to calibrate the precis rotameter at the sampling site where the same conditions are present.

c. Manual Buret Bubble meter method. See Appendix 1-C.

F. FILTER WEIGHING PROCEDURE

The step-by-step procedure for weighing filters depends on the make and model of the balance. Consult the manufacturer's instruction book for directions. In addition, follow these guidelines:

1. There shall be no smoking or eating in the weighing area. All filters will be handled with tongs or tweezers. Do not handle the filters with bare hands.

2. Desiccate all filters at least 24 hours before weighing and sampling. Change desiccant before it completely changes color (e.g., before blue desiccant turns all pink). Evacuate desiccator with a sampling or vacuum pump.

3. Zero the balance prior to use.

4. Calibrate the balance prior to use and after every 10 samples.

5. Immediately prior to placement on the balance, pass all filters over an ionization unit to remove static charges. (Return the unit after 12 months of use to the distributor for disposal.)

6. Weigh all filters at least twice.

   a. If there is more than 0.005 milligram difference in the two weighings, repeat the zero and calibration and reweigh the filter.

   b. If there is less than 0.005 milligram difference in the two weighings, average the weights for the final weight.

7. Record all the appropriate weighing information (in ink) in the Weighing Log (OSHA 96).

8. In reassembling the cassette assembly, remember to add the unweighed backup pad <Figure 1-12>.

9. When weighing the filter after sampling, dessicate first and include any loose material from an overloaded filter and cassette.

NOTE: At all times take care not to exert downward pressure on the weighing pan(s). Such action may damage the weighing mechanism.

BIBLIOGRAPHY

American Industrial Hygiene Association (AIHA). 1987. Fundamentals of Analytical Procedures in Industrial Hygiene. AIHA: Akron, OH.

Hesketh, H.E. 1986. Fine Particles in Gaseous Media. Lewis Publishers, Inc.:Chelsea, MA.

Lioy, P.J. 1989. Air Sampling Instruments for Evaluation of Atmospheric Contaminants. American Conference of Governmental Industrial Hygienists: Cincinnati.

Lodge, J.P. Jr., Ed. 1988. Methods of Air Sampling and Analysis. Lewis Publishers, Inc.: Chelsea, MA.

Occupational Safety and Health Administration, U.S. Dept. of Labor. Chemical Information Manual. 1987. U.S. Government Printing Office: Washington, D.C.

APPENDIX 1-A

DETECTOR TUBES/PUMPS

Principle/Description

1. Detector tube pumps are portable equipment which, when used with a variety of commercially available detector tubes, are capable of measuring the concentrations of a wide variety of compounds in industrial atmospheres.

2. Operation consists of using the pump to draw a known volume of air through a detector tube designed to measure the concentration of the substance of interest. The concentration is determined by a colorimetric change of an indicator which is present in the tube contents.

3. Some of the more frequently used detector tubes are available from the OSHA Cincinnati Lab (OCL). Most tubes can be obtained locally.

Applications/Limitations

1. Detector tubes/pumps are screening instruments which may be used

to measure over 200 organic and inorganic gases and vapors or for leak detection. Some aerosols can also be determined.

2. Detector tubes of a given brand are to be used only with a pump of the same brand. The tubes are calibrated specifically for the same brand of pump and may give erroneous results if used with a pump of another brand.

3. A limitation of many detector tubes is the lack of specificity. Many indicators are not highly selective and can cross-react with other compounds. Manufacturer's' manuals describe the effects of interfering contaminants.

4. Another important consideration is sampling time. Detector tubes give only an instantaneous interpretation of environmental hazards. This may be beneficial in potentially dangerous situations or when ceiling exposure determinations are sufficient. When long-term assessment of occupational environments is necessary, short-term detector tube measurements may not reflect time-weighted average levels of the hazardous substances present.

5. Detector tubes normally have a shelf-life at 25 oC of 1 to 2 years. Refrigeration during storage lengthens the shelf-life. Outdated detector tubes (i.e., beyond the printed expiration date) should never be used. The OSHA Training Institute can sometimes use these outdated tubes for training purposes.

Performance Data

1. Specific manufacturers' models of detector tubes are listed in the Chemical Information Manual. The specific tubes listed are designed to cover a concentration range that is near the PEL. Concentration ranges are tube-dependent and can be anywhere from one-hundredth to to several thousand ppm. The limits of detection depend on the particular detector tube.

2. Accuracy ranges vary with each detector tube.

3. The pump may be handheld during operation (weighing from 8 to 11 ounces), or it may be an automatic type (weighing about 4 pounds) which collects a sample using a preset number of pump strokes. A full pump stroke for either type of short-term pump has a volume of about 100 cc.

4. In most cases where only one pump stroke is required, sampling time is about one minute. Determinations for which more pump strokes are required take proportionately longer.

Maintenance

Contact the OSHA Calibration Laboratory in Cincinnati, Ohio for long-term maintenance.

Leakage Test

1. Each day prior to use, perform a pump leakage test by inserting an unopened detector tube into the pump and attempt to draw in 100 ml of air. After a few minutes, check for pump leakage by examining pump compression for bellows-type pumps or return to resting position for piston-type pumps. Automatic pumps should be tested according to the manufacturer's instructions.

2. In the event of leakage which cannot be repaired in the field, send the pump to the OSHA Cincinnati Laboratory for repair.

3. Record that the leakage test was made on the Direct-Reading Data Form (OSHA-93).

Calibration Test

1. Calibrate the detector tube pump for proper volume measurement at least quarterly.

2. Simply connect the pump directly to the bubble meter with a detector tube in-line. Use a detector tube and pump from the same manufacturer.

3. Wet the inside of the 100 cc bubble meter with soap solution.

4. For volume calibration, experiment to get the soap bubble even with the zero ml mark of the buret.

   a. For piston-type pumps, pull the pump handle all the way out (full pump stroke) and note where the soap bubble stops; for bellows-type pumps, compress the bellows fully; for automatic pumps, program the pump to take a full pump stroke. For either type pump, the bubble should stop between the 95 cc and 105 cc marks. Allow 4 minutes for the pump to draw the full amount of air (This time interval varies with the type of detector tube being used in-line with the calibration setup).

   b. Also check the volume for 50 cc (1/2 pump stroke) and 25 cc (1/4 pump stroke) if pertinent. As in Section 1 above, a +/- 5 percent error is permissible. If error is greater than +/- 5 percent, send the pump to OCL for repair and recalibration.

5. Record the calibration information required on the Calibration Log (OSHA-93).

6. It may be necessary to clean or replace the rubber bung or tube holder if a large number of tubes have been taken with the pump.

Additional Information.

1. Draeger, Model 31 (bellows)

When checking the pump for leaks with an unopened tube, the bellows should not be completely expanded after 10 minutes.

2. Draeger, Quantimeter 1000, Model 1 (automatic)
   A battery pack is an integral part of this pump. The pack must be charged prior to initial use. One charge is good for 1000 pump strokes. During heavy use, it should be recharged daily. If a "U" (undervoltage) message is continuously displayed in the readout window of this pump, the battery pack should be immediately recharged.

3. Matheson-Kitagawa, Model 8014-400A (piston)
   When checking the pump for leaks with an unopened tube, the pump handle should be pulled back to the 100-ml mark and locked. After 2 minutes, the handle should be released carefully. It should return to a point <6mm from zero or resting position. After taking 100 to 200 samples, the pump should be cleaned and relubricated. This involves removing the piston from the cylinder, removing the inlet and pressure-relief valve from the front end of the pump, cleaning, and relubricating.

4. Mine Safety Appliances, Samplair Pump, Model A, Part No. 46399 (
   The pump contains a flow-rate control orifice protected by a plastic filter which periodically needs to be cleaned or replaced. To check the flow rate, the pump is connected to a buret and the piston is withdrawn to the 100-ml position with no tube in the tube holder. After 24-26 seconds, 80 ml of air should be admitted to the pump. Every 6 months the piston should be relubricated with the oil provided.

5. Sensidyne-Gastec, Model 800, Part No. 7010657-1 (piston)
   This pump can be checked for leaks as mentioned for the Kitagawa pump; however, the handle should be released after 1 minute. Periodic relubrication of the pump head, the piston gasket, and the piston check valve is needed and is use-dependent.

Special considerations

1. Detector tubes should be refrigerated when not in use to prolong shelf life.

2. Detector tubes should not be used when cold. They should be kept at room temperature or in a shirt pocket for one hour prior to use.

3. Lubrication of the piston pump may be required if volume error is greater than 5 percent.

APPENDIX 1-B

ELECTRONIC FLOW CALIBRATORS

Description

1. These units are high accuracy electronic bubble flowmeters that provide instantaneous air flow readings and a cumulative averaging of multiple samples. These calibrators measure the flow rate of gases and report volume per unit of time.

2. The timer is capable of detecting a soap film at 80 microsecond intervals. This speed allows under steady flow conditions an accuracy of +/- 0.5% of any display reading. Repeatability is +/- 0.5% of any display.

3. The range with different cells is from 1 cc/min to 30 Lpm.

4. Battery power will last 8 hours with continuous use. Charge for 16 hours. Can be operated from A/C charger.

Maintenance of Calibrator

1. Cleaning before use:
   Remove the flow cell and gently flush with tap water. The acrylic flow cell can be easily scratched. Wipe with cloth only. Do not allow center tube, where sensors detect soap film to be scratched or get dirty. NEVER clean with ACETONE. Use only soap and warm water. When cleaning prior to storage, allow flow cell to air dry. If stubborn residue persists, it is possible to remove the bottom plate. Squirt a few drops of soap into the slot between base and flow cell to ease removal.

2. Leak Testing:
   The system should be leak checked at 6" H2O by connecting a manometer to the outlet boss and evacuate the inlet to 6" H2O. No leakage should be observed.

3. Verification of Calibration:
   The calibrator is factory calibrated using a standard traceable to National Institute of Standards and Technology, formerly called the National Bureau of Standards, (NBS). Attempts to verify calibrator against a glass one liter burette should be conducted at 1000 cc/min. for maximum accuracy. The calibrator is linear throughout the entire range.

Shipping/Handling

1. When transporting, especially by air, it is important that one side of the seal tube which connects the inlet and outlet boss, be removed for equalizing internal pressure within the calibrator.

2. Do not transport unit with soap solution or storage tubing in place.

Precautions/Warnings

1. Avoid the use of chemical solvents on flow cell, calibrator case and faceplate. Generally, soap and water will remove any dirt.

2. Never pressurize the flow cell at any time with more than 25 inches of water pressure.

3. Do not charge batteries for longer than 16 hours.

4. Do not leave A/C adapter plugged into calibrator when not in use as this could damage the battery supply.

5. Black close fitting covers help to reduce evaporation of soap in the flow cell when not is use.

6. Do not store flow cell for a period of one week or longer with soap. Clean and store dry.

7. The Calibrator Soap is a precisely concentrated and sterilized solution formulated to provide a clean, frictionless soap film bubble over the wide, dynamic range of the calibrator. The sterile nature of the soap is important in the prevention of residue build-up in the flow cell center tube, which could cause inaccurate readings. The use of any other soap is not recommended.

APPENDIX 1-C

MANUAL BURET BUBBLE METER TECHNIQUE

When a sampling train requires an unusual combination of sampling media (e.g., glass fiber filter preceeding impinger), the same media/devices should be in line during calibration. Calibrate personal sampling pumps before and after each day of sampling.

Bubble Meter Method

1. Allow the pump to run 5 minutes prior to voltage check an calibration.

2. Assemble the polystyrene cassette filter holder using the appropriate filter for the sampling method. If a cassett adaptor is used, care should be taken to ensure that it d not come in contact with the back-up pad.

NOTE: When calibrating with a bubble meter, the use of cassette adaptors can cause moderate to severe pressure drop in th sampling train, which will affect the calibration result. If adaptors are used for sampling, then they should be us when calibrating.

3. Connect the collection device, tubing, pump and calibrati apparatus as shown in Figures 1-13 and 1-14.

4. A visual inspection should be made of all Tygon tubing connections.

5. Wet the inside of a 1-liter buret with a soap solution.

6. Turn on the pump and adjust the pump rotameter to the appropriate flow rate setting.

7. Momentarily submerge the opening of the buret in order to capture a film of soap.

8. Draw two or three bubbles up the buret in order to ensure that the bubbles will complete their run.

9. Visually capture a single bubble and time the bubble from to 1000 ml for high flow pumps or 0 to 100 ml for low flo pumps.

10. The timing accuracy must be within +1 second of the time corresponding to the desired flow rate.

11. If the time is not within the range of accuracy, adjust t flow rate and repeat steps 9 and 10 until the correct flo rate is achieved. Perform steps 9 and 10 at least twice, any event.

12. While the pump is still running, mark the pump or record the OSHA-91 the position of the center of the float in th pump rotameter as a reference.

13. Repeat the procedures described above for all pumps to be used for sampling. The same cassette and filter may be u for all calibrations involving the same sampling method. <Figure 1-13> <Figure 1-14>

APPENDIX 1-D

SHELF-LIFE OF SAMPLING MEDIA PROVIDED BY SLCAL

Sampling Medium	Shelf-Life	Comments
Sodium hydroxide (all normalities)	6 months	
Hydrochloric acid Sulfuric acid Methanol in water	one year	Same for all concentrations of all solutions.
All organic solvents in pure state	4 years	
Bis-chloromethyl ether (BCME) and Chloromethyl methyl ether (CMME) collecting solution	2 months	Must be stored in a dark bottle in a refrigerator.
Hydroxylammonium chloride solutions (for acetic anhydride, ketene)	2 weeks	Should be stored in a refrigerator in a light-protect

		container.
Hydroxylammonium chloride-Sodium hydroxide mixed solutions (for acetic anhydride, ketene collection)	Stable only 2 hour	Must be prepared fresh just prior to use.
Hydrogen peroxide (0.3N) for sulfur dioxide collection	6 months	Stable if it is protected from light and refrigerated.
Girard T Reagent	2 weeks	Store in glassware in the dark.
Folin's Reagent	5 days	Must be stored in a refrigerator.
Passive Monitors	Must be used before the expirat date (if given) printed on the monitor package.	
Nitrogen oxides collection tubes		Should be stored in a refrigerator.

APPENDIX 1-E

SAMPLING FOR SPECIAL ANALYSES

Silica Samples Analyzed by X-Ray Diffraction (XRD).

1. Air Samples. Respirable dust samples are analyzed for quartz and cristobalite by X-ray diffraction (XRD). XRD is the preferred analytical method due to its sensitivity, minimum requirements for sample preparation and ability to identify polymorphs (different crystalline forms) of free silica.

   a. The analysis of free silica by XRD requires that the particle size distribution of the samples be matched as closely as possible to the standards. This is best accomplished by collecting a respirable sample.

      1) Respirable dust samples are collected on a tared low ash PVC filter using a 10mm nylon cyclone at a flow rate of 1.7 lpm.

      2) A sample not collected in this manner is considered a total dust (or nonrespirable) sample. CSHOs are discouraged from submitting total dust samples since an accurate analysis cannot be provided by XRD for such samples.

      3) If the sample collected is nonrespirable, the laboratory must be advised in Item 37 on the OSHA-91 Form.

b. Quartz and cristobalite are the only two polymorphs of free silica which are presently being analyzed by the laboratory. Tridymite is not currently being analyzed. Samples are analyzed for cristobalite only upon request.

c. Quartz (or cristobalite) is identified by its major (primary) X-ray diffraction peak. Because other substances also have peaks at the same position, it is necessary to confirm quartz (or cristobalite) principally by the presence of secondary and/or tertiary peaks.

d. If they are considered to be present in the work environment the following major chemicals which can interfere with an analysis should be noted:

Aluminum phosphate
Feldspars (microcline, orthoclase,plagioclase)
Graphite
Iron carbide
Lead sulfate
Micas (biotite,muscovite)
Montmorillonite
Potash
Sillimanite
Silver chloride
Talc
Zircon (Zirconium silicate)

NOTE: Specific additional chemicals should be listed in Item 37 of OSHA-91 Form only if they are suspected to be present.

e. A sample weight and total air volume shall accompany all filter samples. Sample weights of 0.5 to 3.0 milligrams are preferred.

1) Do not submit a sample(s) unless its weight or the combined weights of all filters representing an individual exposure exceed 0.05 milligram.

2) If heavy sample loading is noted during the sampling period, it is recommended that the filter cassette be changed to avoid collecting a sample with a weight greater than 5.0 milligrams.

3) If a sample weight exceeds 5.0 mg, another sample of a smaller air volume, whenever possible, should be collected to obtain a sample weight of less than 5.0 mg.

f. Laboratory results for air samples are usually reported under one of four categories:

1) Percent Quartz (or Cristobalite). Applicable for a respirable sample in which the amount of quartz (or

cristobalite) in the sample was confirmed.

2) Less Than or Equal To Value in Units of Percent. Less or equal to values are used when the adjusted 8-hour exposure is found to be less than the PEL, based on the sample's primary diffraction peak. The value reported represents the maximum amount of quartz (or cristobalite) which could be present. However, the presence of quartz (or cristobalite) was not confirmed using secondary and/or tertiary peaks in the sample since the sample could not be in violation of the PEL.

3) Approximate Values in Units of Percent. The particle size distribution in a total dust sample is unknown and error in the XRD analysis may be greater than for respirable samples. Therefore, for total dust samples, an approximate result is given.

4) Nondetected. A sample reported as nondetected indicates that the quantity of quartz (or cristobalite) present in the sample is not greater than the detection limit of the instrument. The detection limit is usually 10 micrograms for quartz and 30 micrograms for cristobalite.

* If less than a full-shift sample was collected, th CSHO should evaluate a nondetected result to determine whether adequate sampling was performed.

* If the presence of quartz (or cristobalite) is suspected in this case, the Industrial Hygienist may want to sample for a longer period of time to increase the sample weights.

2. Bulk Samples. Bulk samples must be submitted for all silica analyses.

a. They have two purposes:

1) For laboratory use only, to confirm the presence of quartz or cristoblite in respirable samples, or to assess the presence of other substances that may interfere in th analysis of respirable samples.

2) To determine the approximate percentage of quartz (or cristobalite) in the bulk sample.

b. A bulk sample submitted "for laboratory use only" must be representative of the airborne free silica content of the work environment sampled; otherwise, it will be of no value.

c. The laboratory's order of preference for bulk samples for an evaluation of personal exposure is:

1) A high volume respirable area sample.

2) A high volume area sample.
3) A representative settled dust (rafter) sample.
4) A bulk sample of the raw material used in the manufacturing process.

* This is the last choice and the least desirable.
* It should be submitted "for laboratory use only" there is a possibility of contamination by other materials during the manufacturing process.

d. The type of bulk sample submitted to the laboratory should be stated on the OSHA-91 Form and cross-referenced to the appropriate air samples.

e. A bulk sample analysis for percent quartz (or cristobalite) will be reported only upon specific request by the CSHO in Item 36 of the OSHA-91 Form.

f. A reported bulk sample analysis for quartz (or cristobalite) will be semi-quantitative in nature because:

1) The XRD analysis procedure requires a thin layer deposition for an accurate analysis.

2) The error for bulk samples analyzed by XRD is unknown because the particle size of nonrespirable bulk samples varies from sample to sample.

Samples Analyzed by Inductively Coupled Plasma (ICP).

1. Metals. Where two or more of the following analytes are requested on the same filter, an ICP analysis may be conducted. However, the Industrial Hygienist should specify the metals of interest in the event samples cannot be analyzed by the ICP method. A computer print-out of the following 13 analytes may be reported:

Antimony
Beryllium
Cadmium
Chromium
Cobalt
Copper
Iron
Lead
Manganese
Molybdenum
Nickel
Vanadium
Zinc

2. Arsenic. Samples analyzed for the 13 analytes mentioned above can also be analyzed for arsenic by request. The arsenic

analysis is performed by a different technique and results are reported separate from ICP results.

3. If requested, the laboratory can analyze for "solder-type" elements, such as:

Antimony
Beryllium
Cadmium
Copper
Lead
Silver
Tin
Zinc

Samples Analyzed by X-Ray Fluorescence (XRF).

1. Filter, wipe and bulk samples can be qualitatively analyzed by XRF.

2. Requests for XRF analyses should be preceded by a phone call to SLCAL to determine the extent and value of the analysis.

3. Packaging and shipping of such samples should be done in a manner consistent with directions previously given in this chapter.

APPENDIX 1-F

SAMPLING AND ANALYTICAL ERRORS (SAE'S)

1. Definition of SAE's. When an employee is sampled and the results analyzed, the measured exposure will rarely be the same as the true exposure. This variation is due to sampling and analytical errors (SAE's). The total error is dependent upon the combined effects of the contributing errors inherent in sampling, analysis, and pump flow.

2. Definition of Confidence Limits. Error factors determined by statistical methods shall be incorporated into the sample results to obtain the lowest value that the true exposure could be (with a given degree of confidence) and also the highest value the true exposure could be (also with some degree of confidence).

   a. The lower value is termed the lower confidence limit (LCL) and the upper value is termed the upper confidence limit (UCL).

   b. These confidence limits are termed one-sided since the only concern is with being confident that the true exposure is on one side of the PEL.

3. Determining SAE's. SAE's which provide a 95 percent confidence

limit have been developed and are listed on each OSHA-91B report form (most current SAEs) and are also presented in the Chemical Information Manual. If there is no SAE listed in the manual for a specific substance, apply the manufacturer's recommended error.

4. Environmental Variables. Environmental variables generally far exceed sampling and analytical errors. Samples taken on a given day are used by OSHA to determine compliance with PEL's. However, where samples are taken over a period of time (as is the practice of some employers) the CSHO should review the long term pattern and compare it with the results he/she obtains. Where OSHA's samples fit the long term pattern this helps to support the compliance determination. Where OSHA's results differ substantially from the historical pattern, the CSHO should investigate the cause of this difference and perhaps conduct additional sampling.

5. Confidence Limits. One-sided confidence limits can be used to classify the measured exposure into one of three categories.

   a. If the measured results do not exceed the standard and the UCL also does not exceed the standard, we can be 95 percent confident that the employer is in compliance. (See equation 1F-6.)

   b. If the measured exposure exceeds the PEL and the LCL of that exposure also exceeds the PEL, we can be 95 percent confident that the employer is in noncompliance, and a violation is established. (See equation 1F-7.)

   c. If the measured exposure does not exceed the PEL, but the UCL of that exposure does exceed the PEL, we cannot be 95 percent confident that the employer is in compliance. (See equation 1F-6.) Likewise, if the measured exposure exceeds the PEL, but the LCL of that exposure is below the PEL, we cannot be 95 percent confident that the employer is in noncompliance. (See equation 1F-7.) In both of these cases, our measured exposure falls into a region which is termed "possible over-exposure."

      1) A violation is not established if the measured exposure falls into the "possible overexposure" region. It should be noted that the closer the LCL comes to exceeding the PEL, the more probable it becomes that the employer is in noncompliance.

      2) If measured results are in this region, the CSHO should consider further sampling, taking into consideration the seriousness of the hazard, pending citations, and how close the LCL is to exceeding the PEL.

      3) If further sampling is not conducted, or if additional measured exposures still fall into the "possible

overexposure" region, the CSHO should carefully explain to the employer and employee representative in the closing conference that the exposed employee(s) may be overexposed but that there was insufficient data to document noncompliance. The employer should be encourage to voluntarily reduce the exposure and/or to conduct further sampling to assure that exposures are not in exce of the standard.

6. Sampling Methods. The LCL and UCL are calculated differently depending upon the type of sampling method used. Sampling methods can be classified into one of three categories:

   a. Full-period, Continuous Single Sampling. Full-period, continuous single sampling is defined as sampling over the entire sample period with only one sample. The sampling may be for a full-shift sample or for a short period ceiling determination.

   b. Full-period, Consecutive Sampling. Full-period, consecutive sampling is defined as sampling using multiple consecutive samples of equal or unequal time duration which, if combined, equal the total duration of the sample period. An example would be taking four 2-hour charcoal tube samples There are several advantages to this type of sampling.

      1) If a single sample is lost during the sampling period due to pump failure, gross contamination, etc., at least some data will have been collected to evaluate the exposure.

      2) The use of multiple samples will result in slightly lower sampling and analytical errors.

      3) Collection of several samples allows conclusions to be reached concerning the manner in which differing segments of the workday affect overall exposure.

   c. Grab Sampling. Grab sampling is defined as collecting a number of short-term samples at various times during the sample period which, when combined, provide an estimate of exposure over the total period. Common examples include the use of detector tubes or direct-reading instrumentation (with intermittent readings).

7. Calculations.

   a. If the initial and final calibration flow rates are different, a volume calculated using the highest flow rate should be reported to the laboratory. If compliance is not established using the lowest flow rate, further sampling should be considered.

   b. Generally, sampling is conducted at approximately the same temperature and pressure as calibration, in which case no

correction for temperature and pressure is required and the sample volume reported to the laboratory is the volume actually measured. Where sampling is conducted at a substantially different temperature or pressure than calibration, an adjustment to the measured air volume may be required depending on sampling pump used, in order to obtain the actual air volume sampled.

c. The actual volume of air sampled at the sampling site is reported, and used in all calculations.

1) For particulates, the laboratory reports mg/m(3) of contaminant using the actual volume of air collected at the sampling site. The value in mg/m(3) can be compared directly to OSHA Toxic and Hazardous Substances Standards (e.g. 29 CFR 1910.1000).

2) The laboratory normally does not measure concentrations of gases and vapors directly in parts per million (ppm). Rather, most analytical techniques determine the total weight of contaminant in collection medium. Using the air volume provided by the CSHO, the lab calculates concentration in mg/m(3) and converts this to ppm at 25 degrees C and 760mm Hg using Equation 1F-1. This result is to be compared with the PEL without adjustment for temperature and pressure at the sampling site.

ppm(NTP) = mg/m(3) (24.45)/(Mwt) Equation 1F-1

where: 24.45 = molar volume at 25 degrees C (298 K) and 760mm Hg

Mwt = molecular weight

NTP = Normal Temperature and Pressure, 25 degrees C and 760mm Hg.

3) If an occasion arises where it is necessary to know the actual concentration in ppm at the sampling site, it can derived from the laboratory results reported in ppm at NT by using the following equation:

ppm(PT) = ppm(NTP) (760/P) (T/298) Equation 1F-2

where: P = sampling site pressure (mm of Hg)

T = sampling site temperature (Degrees K)

298 = temperature in degrees Kelvin (273 degrees K + 25 degrees)

since ppm(NTP) = mg/m(3) (24.45)/(Mwt)

ppm(PT) = mg/m(3) X 24.45/Mwt X 760/P X T/298 Equation 1F

NOTE: When a laboratory result is reported as mg/m(3) contaminant, concentrations expressed as ppm(PT) cannot be compared directly to t standards table without converting to NTP.

NOTE: Barometric pressure can be obtained by calling the local weath station or airport, request the unadjusted barometric pressure. If these sources are not available then a rule of thumb is For every 1000 feet of elevation, the barometric pressure decreases by 1 inch of Hg.

8. Calculation Method for a Full-period, Continuous Single Sample.

   a. Obtain the full-period sampling result (value X), the PEL and the SAE. The SAE can be obtained from the Chemical Information Manual.

   b. Divide X by the PEL to determine Y, the standardized concentration. That is:

      Y = X/PEL (Equation 1F-5)

   c. Compute the UCL (95%) as follows:

      UCL (95%) = Y + SAE (Equation 1F-6)

   d. Compute the LCL (95%) as follows:

      LCL (95%) = Y - SAE (Equation 1F-7)

   e. Classify the exposure according to the following classification system:

      1) If the UCL </= 1, a violation does not exist.

      2) If LCL </= 1 and the UCL > 1, classify as possible overexposure.

      3) If LCL > 1, a violation exists.

9. Calculation Method for Full-period Consecutive Sampling. The use of multiple consecutive samples will result in slightly lower sampling and analytical errors than the use of one continuous sample since the inherent errors tend to partially cancel each other. The mathematical calculations, however, are somewhat more complicated. If preferred, the CSHO may first determine if compliance or noncompliance can be established using the calculation method noted for a full-period, continuous, single sample measurement. If results fall into the "possible overexposure" region using this method, a more exact calculation should be performed using equation 1F-4.

   a. Obtain X1, X2 ..., Xn, the n consecutive concentrations on one workshift and their time durations, T1, T2, ..., Tn.

Also obtain the SAE in Appendix A, Chemical Information Table.

b. Compute the TWA exposure.

c. Divide the TWA exposure by the PEL to find Y, the standardized average (TWA/PEL).

d. Compute the UCL (95%) as follows:

$$UCL(95\%) = Y + SAE \quad \text{(Equation 1F-6)}$$

e. Compute the LCL (95%) as follows:

$$LCL(95\%) = Y - SAE \quad \text{(Equation 1F-7)}$$

f. Classify the exposure according to the following classification system:

1) If UCL <= 1, a violation does not exist.

2) If LCL <= 1, and the UCL > 1, classify as possible overexposure.

3) If LCL > 1, a violation exists.

g. When the LCL <= 1.0 and UCL > 1.0, the results are in the "possible overexposure" region, and the CSHO must analyze the data using the more exact calculation for full-period consecutive sampling as follows:

$$LCL = \frac{Y - \overline{SAE / T(12)\ X(12) + T(22)\ X(22)} \ldots T(n2)\ X(n2)}{PEL\ (T(1) + T(2) + \ldots T(n))} \quad \text{Equation 1F}$$

10. Grab Sampling. If a series of grab samples (e.g., detector tubes) are used to determine compliance with either an 8-hour TWA limit or a ceiling limit, consult with the ARA for Technical Support regarding sampling strategy and the necessary statistical treatment of the results obtained.

11. SAEs for Exposure to Chemical Mixtures. Often an employee is simultaneously exposed to a variety of chemical substances in the workplace. Synergistic toxic effects on a target organ is common for such exposures in many construction and manufacturing processes. This type of exposure can also occur when impurities are present in single chemical operations. New permissible exposure limits for mixtures, such as the recent welding fume standard (5 mg/m(3)), address the complex problem of synergistic exposures and their health effects. In addition, 29 CFR 1910.1000 contains a computational approach to assess exposure to a mixture. This calculation should be used when components in the mixture pose a synergistic threat to worker health.

Whether using a single standard or the mixture calculation,

analytical results:

TWA = (6.26 mg/m(3)) 240 min + (5.85 mg/m(3)) 210 mi

450 min = 6.07 mg/m(3)

Y = 6.07 mg/m(3)/PEL = 6.07/5.0 = 1.21

Assuming a continuous sample:

LCL = 1.21 - 0.23 = 0.98

UCL = 1.21 + 0.23 = 1.44

Step 2. Since the LCL < 1.0 and UCL > 1.0, the results are in the possible overexposure region, and the CSHO must analyze the data using the more exact calculation for full-period consecutive sampling as follows:

$$LCL = 1.21 - \frac{0.23/(240\ min)(2)(6.26 mg/m(3))(2) + (210 min)(2)(5.85 mg/m(3}{5.0\ mg/m(3)\ (240 + 210\ min)}$$

= 1.21 - 0.20

= 1.01

Since the LCL > 1.0, a violation is established.

the sampling and analytical error (SAE) of the individual constituents must be considered before arriving at a final compliance decision. These SAEs can be pooled and weighted to give a control limit for the synergistic mixture. To illustrate this control limit, the following example using the mixture calculation is shown:

The mixture calculation is expressed as:

$$E(m) = (C(1)/L(1) + C(2)/L(2)) + ...C(n)/L(n) \quad \text{Equation 1F-9}$$

Where: Em = equivalent exposure for a mixture
(E(m) should be </= 1 for compliance)
C = concentration of a particular substance
L = PEL

As an example, an exposure to three different but synergistic substances:

Material	8-hr Exposure (ppm)	8-hr TWA PEL (ppm)	SAE
Substance 1	500	1000	0.089
Substance 2	80	200	0.11
Substance 3	70	200	0.18

Using Equation 1F9: E(m) = 500/1000 + 80/200 + 70/200 = 1.25
Since E(m) > 1, an overexposure appears to have occurred; however, the SAE for each substance also needs to be considered:
Exposure ratio (for each substance) Y(n) = C(n)/L(n)
Ratio to total exposure R(1) = Y(1)/E(m),...R(n) = Y(n)/E(m)
The SAEs (95% confidence) of the substance comprising the mixture can be pooled by:

$$RS(t) = [((R(1))(2) \text{ X } (SAE(1))(2))+(R(2))(2) \text{ X } (SAE(2))(2))+ ....(R(n))(2) \text{ X } (SAE(n))(20))](1/2)$$

The mixture Control Limit (CL) is equivalent to: 1 + RS(t)
If E(m) </= CL, then an overexposure has not been established at the 95% confidence level; further sampling may be necessary.

If E(m) > 1 and E(m) > CL, then an overexposure has occurred (9 confidence).

Using the mixture data above:

Y(1) = 500/1000 Y(2) = 80/200 Y(3) = 70/200
Y(1) = .5 Y(2) = .4 Y(3) = .35
R(1) = Y(1)/E(m) = 0.4 R(2) = 0.32 R(3) = 0.28

RS(t2) = (0.4)(2)(0.089)(2) + (0.32)(2)(0.11)(2) + (0.28)(2)(0.18)

RS(t) = (RS(t2))1/2 = 0.071

CL = 1 + RS(t) = 1.071

E(m) = 1.25

Therefore E(m) > CL and an overexposure has occurred within 95% confidence limits.

This calculation is also used when considering a standard such as the one for total welding fumes. A computer program is available for personal computers which will calculate a control limit for any synergistic mixture. The program will run on any IBM compatible computer.

Sample Calculation for Full-period, Continuous Single Sample

A single fiberglass filter and personal pump were used to sample for carbaryl for a 7-hour period. The CSHO was able to document that the exposure during the remaining unsampled one-half hour of the 8-hour shift would equal the exposure measured during the 7-hour period. The laboratory reported 6.07 mg/m3. The SAE for this method is 0.23. The PEL is 5.0 mg/m3. (See Chemical Information Manual)

Step 1. Calculate the standardized concentration.

Y = 6.07/5.0 = 1.21

Step 2. Calculate confidence limits.

LCL = 1.21 - 0.23 = 0.98

Since the LCL does not exceed 1.0 noncompliance is not established. The UCL is calculated:

UCL = 1.21 + 0.23 = 1.44

Step 3. Classify the exposure.

Since the LCL </= 1.0 and the UCL > 1.0, classify as possible overexposure.

Sample Calculation for Full-period Consecutive Sampling

If two consecutive samples had been taken for carbaryl instead of one continuous sample, and the following results were obtained:

Sample	A	B
Sampling Rate (lpm)	2.0	2.0
Time (Min)	240	210
Volume (L)	480	420
Weight (mg)	3.005	2.457
Concentration (mg/m(3))	6.26	5.85

The SAE for carbaryl is 0.23.

Step 1. Calculate the UCL and the LCL from the sampling and

ATTACHMENT 4

To/MS: T. E. Gould, EES-15, MS J495
From/MS: Roger L. Rasmussen, DX-DO
Phone/FAX: 662-3111
Date: August 12, 1997

SUBJECT: POSSIBLE USE OF ARSENIC AT TA-15, FIRING SITES A, B, AND C

Regarding your inquiry of any knowledge I might have on the subject above, I present the following:

During the period of August 4 -12, 1997 I researched the archival files of LANL with the help of staff, for any mention of the use of arsenic in the explosives field testing at these sites. These sites had a limited period of use and facilities thereon which could bracket their purpose(s) and function. Essentially this defined their usefulness to the basic work of the Manhattan-Era Laboratory and into the post-war work shortly thereafter until they were decommissioned in 1952 or earlier. Their use was weapons related as defined by the designs of the times. This basically establishes the elemental materials/metals involved. Nowhere is arsenic even mentioned.

In lieu of this lack of mention of arsenic in old reports/data books, I resorted to extensive telephone interviews (and personal inquiry of an archival researcher) of several persons of technical knowledge and experience who were either at Los Alamos during and shortly thereafter the times in question. These are people representing expertise and credibility in such fields as physical/organic chemistry, physics, metallurgy and explosives. Their answer to my inquiry was a unanimous one: They never heard of the use of arsenic at the Laboratory during the times in question - nor could they even imagine its use (or need) relating to the work of the time, or its presence in the materials of use/testing. No radioactive decay of these materials could result in the presence of arsenic. It was not a component of the explosives used. No connection to arsenic in any of the field work could be made.

The result of my search/survey in this matter is: arsenic is a non-issue.

RLR/nar

Cy: Doug Pippin, EES-15, MS J495
Tracy McFarland, ICF Kaiser, MS J495
RPF, MS M707
OU 1086 File
EES-15 Files

ATTACHMENT 5

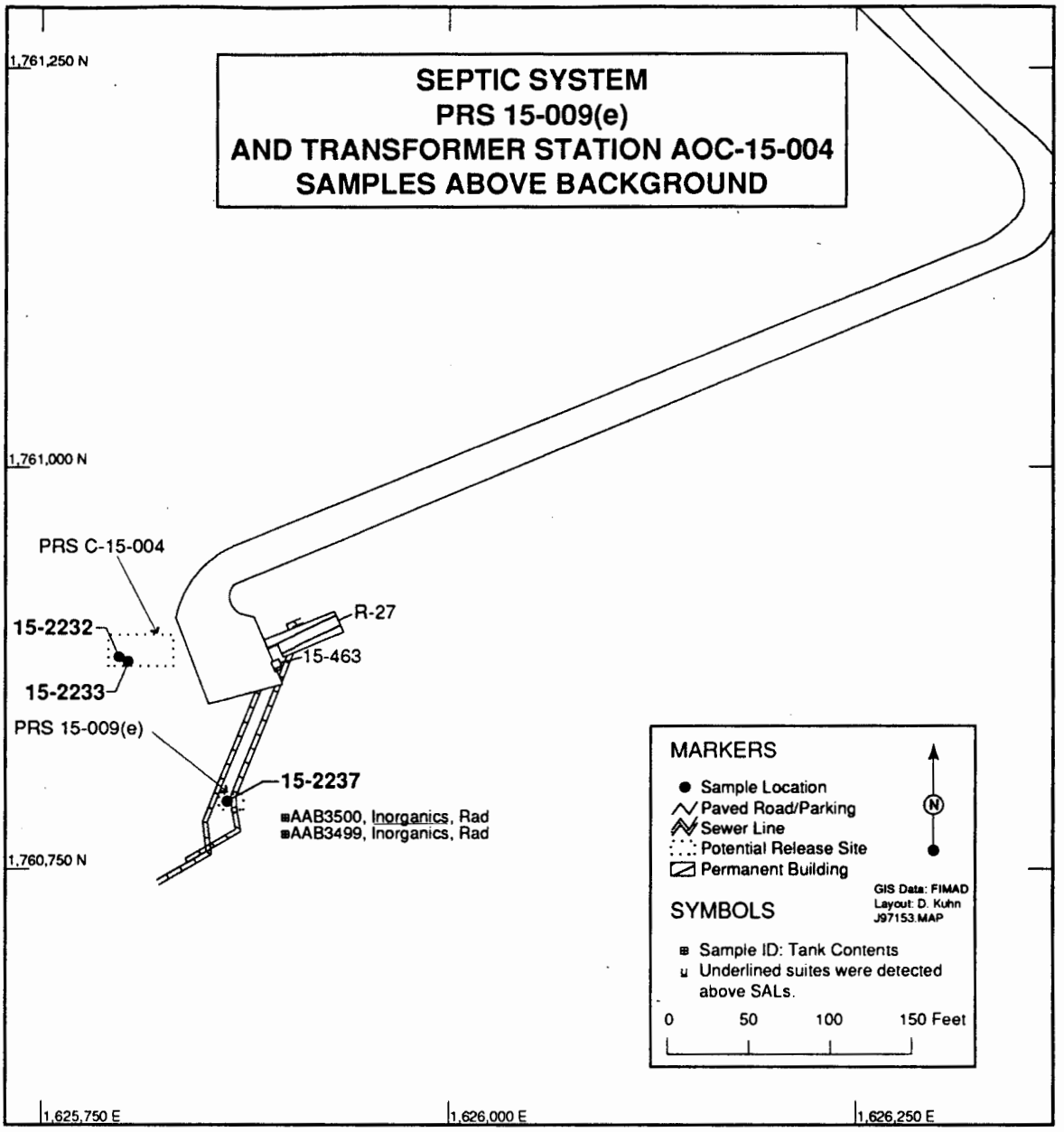

Figure 4-6. Locations of samples above background

ATTACHMENT 6

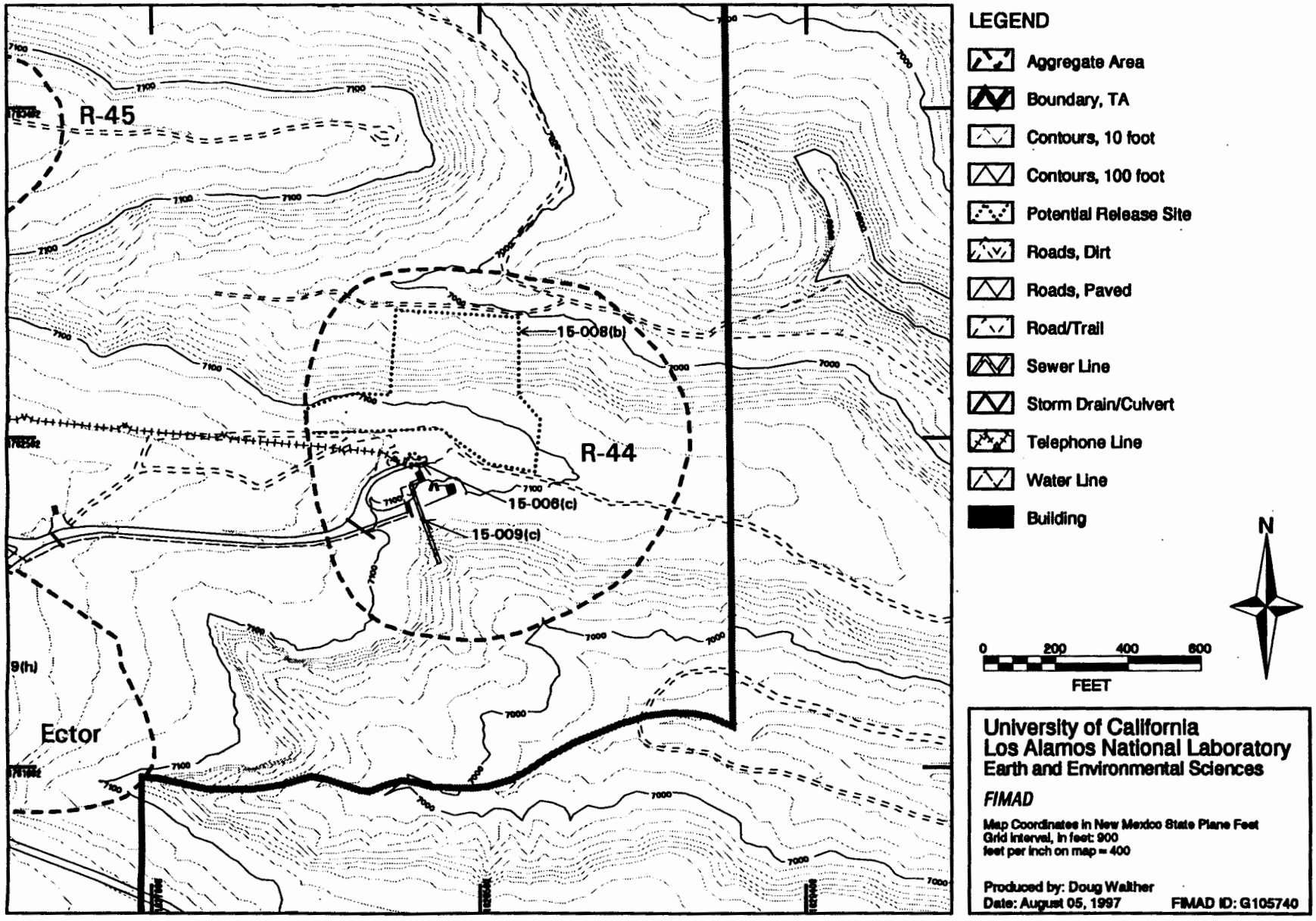

TA-15, R-44 Site PRSs

R-44
PRS 15-008(b)
Samples Above Background

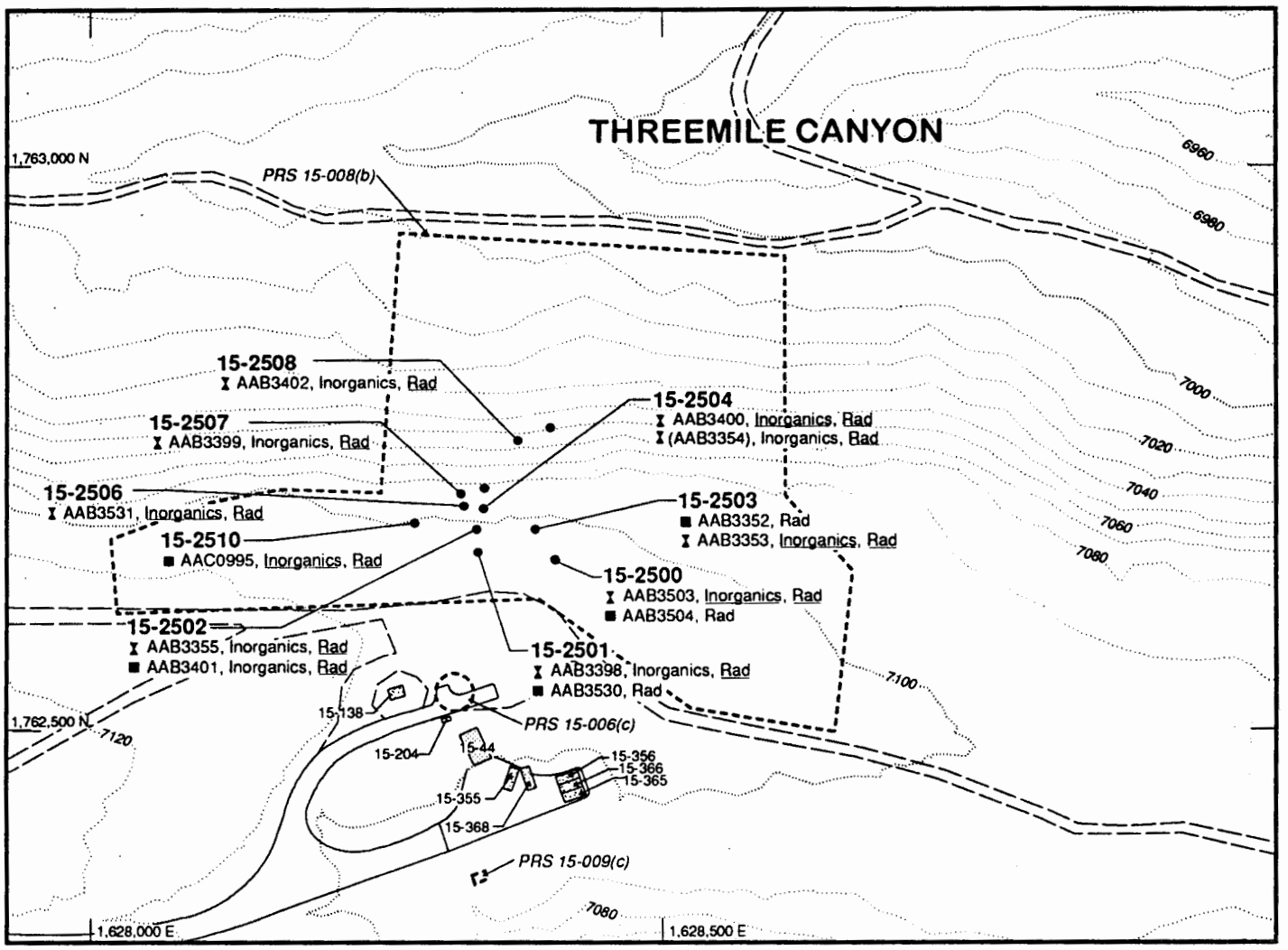

- Sample Location—analytes listed are above background; underlined analytes were detected above SALs; duplicate samples are shown in parentheses

Permanent buildings
Temporary buildings
Paved roads/parking
Dirt roads/parking
PRS boundary
Contour interval = 10 ft

N

Sample type:
Surface sample
Subsurface sample

GIS Data: FIMAD
Layout: J.Sansom
J97151.MAP

0 250 500 Feet

Figure 4-10a. Locations of samples above background