TA16

Los Alamos
NATIONAL LABORATORY
EST. 1943

Environmental Programs
P.O. Box 1663, MS M991
Los Alamos, New Mexico 87545
(505) 606-2337/FAX (505) 665-1812

ENTERED

National Nuclear Security Administration
Los Alamos Site Office, MS A316
Environmental Restoration Program
Los Alamos, New Mexico 87544
(505) 667-4255/FAX (505) 606-2132

Date: October 30, 2009
Refer To: EP2009-0553

James Bearzi, Bureau Chief
Hazardous Waste Bureau
New Mexico Environment Department
2905 Rodeo Park Drive East, Building 1
Santa Fe, NM 87505-6303

RECEIVED
NOV 2009
Hazardous Waste Bureau

Subject: Submittal of the Grouting Plan for the Corrective Measures Implementation for Consolidated Unit 16-021(c)-99

Dear Mr. Bearzi:

Enclosed please find two hard copies with electronic files of the Grouting Plan for the Corrective Measures Implementation for Consolidated Unit 16-021(c)-99.

If you have any questions, please contact John McCann at (505) 665-1091 (jmccann@lanl.gov) or Woody Woodworth at (505) 665-5820 (lwoodworth@doeal.gov).

Sincerely,

Michael J. Graham, Associate Director
Environmental Programs
Los Alamos National Laboratory

Sincerely,

David R. Gregory, Project Director
Environmental Operations
Los Alamos Site Office

32126

MG/DG/DM/JM/RJ:sm

Enclosures: Two hard copies with electronic files – Grouting Plan for the Corrective Measures Implementation Plan for Consolidated Unit 16-021(c)-99) (LA-UR-09-6807)

Cy: (w/enc.)
Neil Weber, San Ildefonso Pueblo
John McCann, EP-CAP, MS M992
Woody Woodworth, DOE-LASO, MS A316
RPF, MS M707 (with two CDs)
Public Reading Room, MS M992

Cy: (Letter and CD and/or DVD only)
Laurie King, EPA Region 6, Dallas, TX
Steve Yanicak, NMED-DOE-OB, MS M894
Kristine Smeltz, EP-WES, MS M992

Cy: (w/o enc.)
Tom Skibitski, NMED-OB, Santa Fe, NM
Annette Russell, DOE-LASO (date-stamped letter emailed)
Michael J. Graham, ADEP, MS M991
Alison M. Dorries, EP-WES, MS M996
Dave McInroy, EP-CAP, MS M992
IRM-RMMSO, MS A150 (date-stamped letter emailed)

LA-UR-09-6807
October 2009
EP2009-0553

Grouting Plan for the Corrective Measures Implementation for Consolidated Unit 16-021(c)-99

Los Alamos
NATIONAL LABORATORY
EST. 1943

Prepared by the Environmental Programs Directorate

Los Alamos National Laboratory (LANL), operated by Los Alamos National Security (LANS), LLC, for the U.S. Department of Energy under Contract No. DE-AC52-06NA25396, has prepared this document to support the investigation and cleanup, including corrective action, of contamination at LANL, as required by the Compliance Order on Consent, signed March 1, 2005. The public may copy and use this document without charge, provided that this notice and any statement of authorship are reproduced on all copies.

CONTENTS

1.0 INTRODUCTION 1

2.0 BACKGROUND 1
- 2.1 Site Description and Operational History 1
- 2.2 Previous 260 Outfall Surge Bed Investigations 2
- 2.3 TA-16 and the 260 Outfall Conceptual Model 3
  - 2.3.1 TA-16 Conceptual Model 3
  - 2.3.2 Outfall 260 Conceptual Model 3
- 2.4 Injection Grouting Design 4

3.0 SCOPE OF WORK 5
- 3.1 Staging and Lay Down Areas 5
- 3.2 Best Management Practices Controls 6
- 3.3 Grout Mix Design 6
  - 3.3.1 Grout Development 6
- 3.4 Spacing and Layout of Injection Boreholes 7
- 3.5 Grout Pump Pressure Capacity, Model, and Manufacturer 7
- 3.6 Refusal Criteria 7
- 3.7 Grouting Operation Details and Duration of Field Effort 7
- 3.8 Air-Permeability Testing 7

4.0 FIELD QUALITY CONTROL PROGRAM 8
- 4.1 Preliminary Requirements 8

5.0 REFERENCES 8

Figures

Figure 1.0-1 Location of TA-16 and Consolidated Unit 16-021(c)-99 with respect to Laboratory TAs and surrounding land holdings 11

Figure 2.2-1 Location of former settling pond, previous boreholes, and proposed injection borehole locations 12

Appendixes

Appendix A Daily Report Form for Drilling, Grouting, and Testing

Appendix B Equipment

1.0 INTRODUCTION

This grouting plan provides details to complete surge bed injection grouting for partial completion of the Technical Area 16 (TA-16) corrective measures implementation (CMI) at Consolidated Unit 16-021(c)-99 at Los Alamos National Laboratory (LANL or the Laboratory) (Figure 1.0-1). Injection grouting is a technique where a low-viscosity grout is injected in a formation filling pores and thereby decreasing formation permeability. The surge beds in the TA-16-260 Outfall (the 260 Outfall) area are granular tuff with a sandlike texture and have increased porosity and higher hydraulic conductivity than the surrounding tuff.

Surge bed injection grouting is one of many remedial actions identified by the corrective measures study (CMS) conducted in 2003 (LANL 2003, 085531) and approved by the New Mexico Environment Department (NMED) in 2006 (NMED 2006, 095631). Work will be conducted in accordance with the Compliance Order on Consent (hereafter, the Consent Order), signed on March 1, 2005. The Consent Order was issued pursuant to the New Mexico Hazardous Waste Act, New Mexico Statutes Annotated (NMSA) 1978, §74-4-10, and the New Mexico Solid Waste Act, NMSA 1978, §74-9-36(D). All activities will be conducted under the Environmental Program (EP) Directorate Corrective Actions Projects (EP-CAP).

The surge bed injection grouting activities consist of the following: establishing staging and lay down areas, installing best management practices (BMP) controls, determining a grout mix designed to meet the permeability performance criteria, designing spacing and layout of injection boreholes, determining appropriate grout pump manufacturer, determining the model number and the pressure capacity for injection equipment, determining refusal criteria for injection, detailing grouting operation, estimating duration of field effort, and performing permeability testing in two grouted locations. Sections 1 and 2 present the introduction and background information. Section 3 describes the scope of work for surge bed injection grouting. Section 4 details the field quality control program. Appendix A provides daily report form for drilling, grouting, and testing. Appendix B provides details of the proposed equipment to be used.

The remedial objective of surge bed injection grouting is to prevent groundwater from making contact with the contaminated upper surge bed within the settling pond area. More specifically, isolation of the contaminated horizon is needed to prevent contaminants from leaching into groundwater, migrating off-site, and threatening drinking water supplies or the environment. The decision to treat in situ was based on the areal extent, depth, and volume of contamination, type and concentration of contaminants present, soil characteristics, site hydrogeology, and other site characteristics (LANL 2003, 085531; LANL 2007, 098192).

2.0 BACKGROUND

TA-16 was established to develop explosive formulations, cast and machine explosive charges, and assemble and test explosive components for the U.S. nuclear weapons program. The majority of work has been conducted in support of the development, testing, and production of explosive charges for the implosion method. Present-day use of this TA is essentially the same, although facilities have been upgraded and expanded as explosive and manufacturing technologies have advanced.

2.1 Site Description and Operational History

Building 16-260, located on the north side of TA-16, has been used for processing and machining high explosives (HE) since 1951. Water is used to machine HE (which is slightly water-soluble); so wastewater

from machining operations contains dissolved HE and may contain entrained HE cuttings. At building 16-260, wastewater treatment consists of routing the water to 13 settling sumps to recover any entrained HE cuttings. From 1951 to 1996, the water from these sumps was discharged to the 260 Outfall that drained into Cañon de Valle. In 1994, outfall discharge volumes were measured at several million gallons per year. The discharge volumes were probably higher during the 1950s when HE production output from building 16-260 was substantially greater than it was in the 1990s (LANL 1994, 076858). In the past, barium had been a constituent of certain HE formulations, and so barium was also present in the outfall wastewater from building 16-260.

During the late 1970s, the 260 Outfall was permitted by the U.S. Environmental Protection Agency (EPA) to operate as EPA Outfall No. 05A056 under the Laboratory's National Pollutant Discharge Elimination System (NPDES) permit (EPA 1990, 012454). The last NPDES permitting effort for the 260 Outfall occurred in 1994. The NPDES-permitted 260 Outfall was deactivated in November 1996. EPA officially removed it from the Laboratory's NPDES permit in January 1998. This waste stream is currently managed by pumping the sumps (and treating the water) at the TA-16 HE wastewater treatment plant.

As a result of the discharge, soils in the 260 Outfall drainage channel are contaminated primarily with HE and barium. The sumps and drainlines of this facility are designated as Solid Waste Management Unit (SWMU) 16-003(k), and the 260 Outfall and drainage are designated as SWMU 16-021(c), according to Module VIII of the Laboratory's Hazardous Waste Facility Permit (EPA 1990, 001585). Because of the Laboratory's consolidation of SWMUs, the two SWMUs are now collectively referred to as Consolidated Unit 16-021(c)-99.

Contaminants associated with Consolidated Unit 16-021(c)-99 are present in shallow soils, springs, and shallow groundwater at several locations at TA-16. These contaminants include barium, hexahydro-1,3,5-trinitro-1,3,5-triazine (RDX); 2,4,6-trinitrotoluene (TNT); and 1,3,5,7-tetranitro-1,3,5,7-tetrazocine (HMX).

SWMU 16-021(c) consists of three portions: an upper drainage channel fed directly by the 260 Outfall, a former settling pond, and a lower drainage channel leading to Cañon de Valle (LANL 2007, 098192, Figure 3.1-1, p. 42). The former settling pond, which was removed during a 2000–2001 interim measure (IM) cleanup (LANL 2002, 073706), was approximately 50 ft long, 20 ft wide, and located within the upper drainage channel, approximately 45 ft below the 260 Outfall. The drainage channel runs approximately 600 ft northeast from the 260 Outfall to the bottom of Cañon de Valle. A 15-ft near-vertical cliff is located approximately 400 ft from the 260 Outfall and marks the break between the upper and lower drainage channels. The IM cleanup removed more than 1300 yd^3 of contaminated soil from the settling pond and channel. Approximately 90% of the HE in the Consolidated Unit 16-021(c)-99 source area was removed (LANL 2002, 073706).

2.2 Previous 260 Outfall Surge Bed Investigations

To determine the vertical extent of HE, several boreholes next to the former settling pond were advanced into tuff as part of the Phase II Resource Conservation and Recovery Act (RCRA) facility investigation (RFI) (LANL 1998, 059891). Several, but not all, of these boreholes indicated the presence of surge beds. Surge beds are typically highly discontinuous features on the Pajarito Plateau. If they are present, they can vary in thickness and permeability over short distances (WoldeGabriel et al. 2001, 092523). Samples from the upper surge bed at approximately 17 ft bgs from borehole 16-02700 contained RDX (4500 mg/kg), HMX (1700 mg/kg), and TNT (3500 mg/kg). In several other boreholes in this area, the presence of the upper surge bed can possibly be inferred by the lack of recovery from coring. The extent of the surge bed and related contamination is therefore uncertain. In borehole16-02705, located 50 ft east of borehole16-02700, a tuff sample collected in tuff above the surge bed horizon contained RDX

(477 mg/kg) and TNT (143 mg/kg); however, because of a lack of core recovery, no sample was collected from the surge bed. These results and others indicate that the upper surge bed is discontinuous and variably contaminated with the highest levels of contamination detected at borehole 16-2700. Figure 2.2-1 shows the settling pond area and these borings. All borings, except 16-27665 and 16-27666, have been abandoned.

To help determine the lateral extent of the upper surge bed and associated HE contamination, NMED requested in 2006 that the Laboratory install three additional boreholes near the former settling pond (NMED 2006, 093551). These boreholes were completed in March 2007. The locations of these borings are shown in Figure 2.2-1. The boreholes were geologically, geophysically, and videographically logged with special emphasis on identifying surge beds. RDX field screening was conducted on 10 screening samples for each 30-ft borehole. Based on field-screening and geological results, two samples were collected from each borehole and submitted for off-site fixed lab analysis. No evidence of surge beds was observed in core samples, downhole video logs, or downhole gamma logs. HE-screening results and fixed analytical results both reported RDX concentrations of less than 3 mg/kg. The surge bed deposits and associated HE contamination do not extend continuously more than 80 ft to the northwest, southeast, or east from borehole 16-02700.

2.3 TA-16 and the 260 Outfall Conceptual Model

The site conceptual model has been explained in detail in the CMS report for 16-021(c)-99 (LANL 2003, 085531) and the RFI Phase III report for Consolidated Unit 16-021(c)-99 (LANL 2003, 077965). The following sections summarize information from both reports.

2.3.1 TA-16 Conceptual Model

At TA-16, the combination of relatively wet mesa and canyons, heterogeneous geologic units, multiple flow paths, different types of flow behavior, and multiple contaminant sources results in a hydrogeologic conceptual model that must incorporate multiple pathways and processes. Because of the site's complexity, the TA-16 conceptual model continues to show uncertainties associated with the distribution of contaminants, particularly within the mesa and Cañon de Valle vadose zones.

The site conceptual model applies to a roughly triangular area bounded on the north by Cañon de Valle, on the south by Water Canyon, on the west by the Pajarito fault zone, and on the east by the confluence of Water Canyon and Cañon de Valle (an area of roughly 3 mi^2). This area encompasses other historical contaminant sources, in addition to the 260 Outfall. Thus, the site conceptual model is applicable to all historical contaminant sources at TA-16, particularly those affecting waters.

Within the site conceptual model, contaminant transport pathways are associated with groundwater flow in tuff, sediment, and waters. Groundwater flow systems occur in many different forms, including fracture and surge bed systems in tuff, alluvial groundwater, spring water, and surface water. The duration and flow rate of groundwater differ in these systems, ranging from perennial flow in the Cañon de Valle alluvial system to episodic stormwater flow in mesa vadose zone fractures.

2.3.2 Outfall 260 Conceptual Model

The 260 Outfall source area and underlying surge bed include three primary contaminant transport pathways from the TA-16-260 source area: (1) transport via surface runoff to Cañon de Valle;
(2) transport via lateral shallow subsurface flow (interflow) surge beds to Cañon de Valle; and
(3) infiltration to the mesa vadose zone hydrologic system through preferred pathways, such as fractures,

in the Bandelier Tuff. The 260 Outfall discharges during the past 50 yr at Consolidated Unit 16-021(c)-99 served as a source for HE and inorganic contamination found throughout the site (LANL 1998, 059891). The principal contaminants in 260 Outfall sediment were barium (up to 20,000 ppm) and HE (greater than 200,000 ppm). Historically, discharge from the sumps at Building 16-260 to the 260 outfall was reportedly as high as several million gal./yr (LANL 1994, 076858). The source area consists of a well-defined upper drainage channel that was fed directly by the building sumps, a former settling pond, and a drainage channel that leads to Cañon de Valle. HE contamination in the 260 Outfall and drainage area has been recognized since at least 1960 when the first soil samples from the 260 Outfall were analyzed.

Borings installed in the former settling pond area revealed the presence of surge beds underlying the area at depths of approximately 17 and 45 ft. Other surge beds containing low-level concentrations of HE were encountered during the Phase II RFI drilling in the area around the 260 Outfall (LANL 1998, 059891). These surge beds (granular tuff with a sand-like texture) possess increased porosity and hydraulic conductivity, and they contain elevated concentrations of HE. The surge beds represent contaminant transport pathways leading away from the source area. The number, lateral extent, and continuity of the surge beds are unknown.

During the IM, a large quantity of contaminated soil was removed from the 260 Outfall and pond area during the IM (LANL 2002, 073706). More than 1300 yd^3 of contaminated material containing approximately 8500 kg of HE was removed from this area. The surge beds were not excavated during the IM. Results from surge bed borings installed during the IM (LANL 2002, 073706) and the Phase III RFI indicate substantial contamination resides within surge beds beneath the former source area. It is likely other similarly contaminated surge beds exist within the mesa vadose zone. Low-level concentrations of HE in fractured and welded tuff, other than surge beds, were also detected during Phase II RFI drilling (LANL 1998, 059891).

Contaminant transport from the 260 Outfall and surge bed area is a direct result of discharges from the outfall of contaminated water to Cañon de Valle and the infiltration of contaminated water into underlying tuff along the 260 Outfall drainage. Once they infiltrated, 260 Outfall water and its contaminants probably migrated from the source area through the nonfractured and fractured underlying tuff as well as the surge beds, with the latter two pathways dominating because of their relatively higher permeability.

The potential for infiltration was likely highest within the 260 Outfall former settling pond, where HE sediment contamination was high and where the ponding of water resulted in a hydraulic driving force for enhanced vertical infiltration. The presence of elevated levels of HE compounds detected within the underlying surge bed confirms this enhanced contaminant migration from the former settling pond. The IM removed all soil from the former settling pond, allowing inspection of previously buried soil/tuff contact. Small fractures in the tuff are apparent, although their characteristics, such as density and precise aperture, were not formally investigated. The IM substantially reduced the quantities of HE and barium throughout the source area and drainage channel. Residual HE contamination remains in pockets of soil distributed along the drainage channel. Sampling of these pockets indicated the presence of HMX, RDX, TNT, and barium. HMX was found at concentrations as high as 2000 mg/kg, barium at concentrations as high as 8200 mg/kg, and RDX at concentrations as high as 1200 mg/kg. Although it contains elevated concentrations, the total volume of residual contaminated soil is estimated to be less than 100 yd^3. Nevertheless, this residual soil represents a continuing source for Cañon de Valle contamination.

2.4 Injection Grouting Design

Based on previous results, the area for grouting appears to be limited to the area of the former settling pond, which covers approximately 1250 ft^2. Because of the probable variability in surge bed thickness and

permeability (WoldeGabriel et al. 2001, 092523), it is not known whether this entire area will be transmissive to grout. Permeability tests on the upper surge bed have not been conducted; however, laboratory results of core samples collected from surge beds in two nearby borings (Newman et al. 2007, 095632) show hydraulic conductivities of 3.8×10^{-3} and 5.0×10^{-4} cm/s.

Because of the general capabilities of grouting and the anticipated surge bed permeability, a performance goal of 5.0×10^{-5} cm/s, representing 1 to 2 orders of magnitude reduction in permeability, is set as the performance standard for grouting. It is anticipated that a low-viscosity grout (Dwyer 1994, 097397) will be needed to meet this performance standard.

Groundwater will probably not be encountered during grouting operations. Groundwater was encountered during installation of borings during the Phase II RFI (LANL 1998, 059891) but was probably related to operation of the former settling pond.

The surface cover of the former settling pond currently consists of an approximately 20-in.-thick clay cap. The cap was disturbed by equipment during excavation of contaminated soil and will be repaired after grouting operations are cpmpleted. At the location of former borehole 16-02700, the upper surge bed is expected to lie approximately 14 ft below ground surface (bgs). This depth is based on current site conditions. The surge bed was first logged as part of the 260 Outfall characterization at a depth of 17 ft bgs (LANL 1998, 059891). In 2001, approximately 3 ft of soil was removed from the former settling pond area as part of the IM (LANL 2002, 073706). The current depth to the surge bed is estimated to be 14 ft.

3.0 SCOPE OF WORK

The surge bed injection grouting activities consist of the following: establishing staging and lay down areas, installing BMP controls, determining a grout mix designed to meet the permeability performance criteria, designing spacing and layout of injection boreholes, determining appropriate grout pump manufacturer, determining the model number and the pressure capacity for injection equipment, determining refusal criteria for injection, detailing grouting operation, estimating duration of field effort, and performing permeability testing in two grouted locations.

3.1 Staging and Lay Down Areas

The main staging and lay down area will be within the HE exclusion area at the TA-16 field trailers (approximately 0.5 m southwest of the field site behind building 16-260. This will permit the crew access during all hours. A secondary staging and lay-down area will be behind building 16-260.

The choice of grout material is determined by the grain size, porosity, and density of the formation. These characteristics of the surge bed material and tuff are determined from borehole logs and archived core from the former settling pond. The grain size of the surge bed material is similar to a fine grained soil ranging in particle size diameter from .001 to 2 mm. The porosity and bulk density of the surge material has not been measured; however, laboratory results of core samples collected from surge beds in two nearby borings (Newman et al. 2007, 095632) show porosities of 47% and 51%, and bulk densities of 1.30 and 1.42 g/cm^3.

To achieve grout infiltration into a formation with these characteristics a low viscosity grout consisting of microfine cement, Type III cement, and/or plasticizer additives would be required. The addition of plasticizers and the specific grout mixture will be determined based on the characteristics of each injection borehole. The addition of plasticizers and the grout mixture will be determined based on field conditions and initial injection attempts.

To confirm this information, a pretest will be conducted at each injection borehole. The pretest will consist of placing a packer in the borehole at the target horizon then conducting a constant head hydraulic conductivity test. This will consist of injecting water at a constant rate and recording the response. It is anticipated that this test will use less than 20 gal. of water. The water source is municipal supply water and is the same water used for mixing grout. This will provide the operator additional information for development and refinement of the grout mixture on an individual borehole basis.

3.2 Best Management Practices Controls

The BMP controls are established by the stormwater pollution prevention plan (SWPPP) and include wattles and erosion blankets. BMP controls will be emplaced at areas disturbed by the grouting operation.

3.3 Grout Mix Design

The grout material and injection technique are dictated by the site conditions. The surge bed site is relatively small in areal extent, estimated to be approximately 1250 ft^2 (LANL 2007, 098192). The contaminant levels are moderate and are primarily HE contamination with RDX concentrations up to 4600 mg/kg (LANL 2007, 098192). HE is an energetic contaminant. The contamination is believed to reside within the surge bed material only at a depth of approximately 14 ft bgs. The overburden consists of very densely welded unsaturated tuff that cannot be easily excavated. Normally, such a small volume of contaminated soil would be treated by excavation; however, because the depth to the surge bed is approximately 14 ft bgs, the volume of contaminated soil versus the overburden volume is relatively small, and the contaminants are energetic. Treatment by grout injection is a logical choice.

The CMI plan specifies pressure injection of a Type I/II cement grout. The performance goals are to achieve a hydraulic conductivity of 5.0×10^{-5} cm/s. This level will reduce the permeability by 1 to 2 orders of magnitude. Additionally, no hydraulic fracturing of formation can occur during grout emplacement. To avoid potential hydraulic fracturing of the subsurface formation in and around the surge bed, low pressure grouting will be used. Low-pressure grouting, otherwise known as permeation or area grouting, is a technique where a low-viscosity grout is injected in a formation filling pores and fissures, thereby decreasing formation permeability.

3.3.1 Grout Development

The choice of grout material is determined by the grain size, porosity, and density of the formation. These characteristics of the surge bed material and tuff are determined from borehole logs and archived core from the former settling pond. The grain size of the surge bed material is similar to a fine-grained soil ranging in particle-size diameter from .001 to 2 mm. The porosity and bulk density of the surge material has not been measured; however, laboratory results of core samples collected from surge beds in two nearby borings (Newman et al. 2007, 095632) show porosities of 47% and 51% and bulk densities of 1.30 and 1.42 g/cm^3. Particle-size distribution also affects grout selection.

The percentage of soil fines may impact the effectiveness of the grout. Soil fine are not groutable with cementitious grouts if fines exceed 8% to 12%. The percentage of particle size from borehole cuttings associated with the surge bed will be checked using sieves in the field.

To achieve grout infiltration into a formation with these characteristics, a low-viscosity grout consisting of microfine cement, Type III cement, and/or plasticizer additives would be required. The addition of plasticizers and the specific grout mixture will be determined based on the characteristics of each

injection borehole. The addition of plasticizers and the grout mixture will be determined based on field conditions and initial injection attempts.

To confirm this information, a pretest will be conducted at each injection borehole. The pretest will consist of placing a packer in the borehole at the target horizon then conducting a constant head hydraulic conductivity test. This will consist of injecting water at a constant rate and recording the response. It is anticipated that this test will use less than 20 gal. of water. The water source is municipal supply water and is the same water used for mixing grout. This will provide the operator additional information for development and refinement of the grout mixture on an individual borehole basis.

3.4 Spacing and Layout of Injection Boreholes

The injection grouting will be initiated at the eastern end of the former settling pond. Injection boreholes will be set at approximately 10-ft centers working upgradient to the west. A second pass may be necessary to infill the 10-ft grid with additional injection boreholes. The drainage walls will constrain the spacing, but every effort will be made to maintain a consistent grid. Grouting will proceed to the west and will include the area to the former outfall and the adjacent tributary drainage. The intent of this approach is to seal the downgradient locations first and then proceed upgradient, effectively creating a wall downgradient.

3.5 Grout Pump Pressure Capacity, Model, and Manufacturer

The equipment used for grout injection includes (1) a drill rig for making the injection boreholes using either air rotary or rotary-percussion drilling methods with air flush (and mist option for dust suppression), as directed by the CMI plan (LANL 2007, 098192); (2) a Marsh funnel for measuring grout viscosity; (3) mud balance for determining the density of drilling fluid; (4) a grout mixer and pump plant for mixing and injecting grout; and (5) a permeation grout monitor for measuring pressures and rates of injection. Details and specifications of each piece of equipment are provided in Appendix B.

3.6 Refusal Criteria

The refusal criteria will be determined by depth and pressures. Grout injection pressure will be limited to 20 pounds per square inch (psi) to avoid potential hydrofracture of the subsurface. Refusal will be considered very low, or no grout flow, at 20 psi. The low flow rate will be determined in the field while optimizing the injection parameters. Additionally, if grout is continuously injected (i.e., no decline in grout injection volume occurs over time), then volume limits will be placed on the total volume of grout injected per unit of time. These limits will be determined by field conditions.

3.7 Grouting Operation Details and Duration of Field Effort

Grouting is scheduled to begin in mid to late October 2009. Field activities will be conducted after normal working hours to accommodate the operations at building 16-260. It is anticipated that field activities will last 2 or 3 wk, depending on site conditions.

3.8 Air-Permeability Testing

The purpose of air-permeability testing is to determine the efficacy of grouting operations. The objective of air-permeability testing is to extract air at one location while monitoring the transient subsurface pressure distribution. Testing will be performed by advancing two boreholes. These boreholes will completely penetrate, and terminate just below, the surge bed. Borehole locations will be determined

following field implementation. Packers will be placed down each borehole and inflated just above the surge bed to isolate the bed. Air will be extracted from one of the two boreholes using a vacuum pump. Pressure transducers will be placed just below the packers in each borehole to measure and record the pressure response caused by the extraction of air. A total of two tests will be performed by drawing vacuum on each of the two boreholes.

This air-permeability testing is similar to the type of testing commonly used at sites where soil vapor extraction is considered.

4.0 FIELD QUALITY CONTROL PROGRAM

A field quality control program will be required as part of the injection grouting plan to ensure that the same grout approved of during the design phase is exactly what is injected. This may be evaluated with simple production-level tests such as Marsh funnel (ASTM D-6910) and mud balance. Additionally, an in situ air-permeability test will be conducted to verify the reduction in the surge bed permeability from grouting operations.

The injection grouting scope of work includes three definable work elements: (1) the grouting plan: preparation, submittal, and approval of grouting plan; (2) drilling: drilling of injection grouting holes; and (3) grouting: injection grouting of surge bed.

4.1 Preliminary Requirements

Documentation of the definable work elements is covered separately by the Construction Quality Control Plan. The daily drilling, grouting, and testing results will be documented in the form supplied in Appendix A.

5.0 REFERENCES

The following list includes all documents cited in this report. Parenthetical information following each reference provides the author(s), publication date, and ER ID. This information is also included in text citations. ER IDs are assigned by the Environmental Programs Directorate's Records Processing Facility (RPF) and are used to locate the document at the RPF and, where applicable, in the master reference set.

Copies of the master reference set are maintained at the NMED Hazardous Waste Bureau and the Directorate. The set was developed to ensure that the administrative authority has all material needed to review this document, and it is updated with every document submitted to the administrative authority. Documents previously submitted to the administrative authority are not included.

Dwyer, B.P., April 1994. "Feasibility of Permeation Grouting for Constructing Subsurface Barriers," report no. SAND94-0786, Sandia National Laboratories, Albuquerque, New Mexico. (Dwyer 1994, 097397)

EPA (U.S. Environmental Protection Agency), 1990. "NPDES Authorization to Discharge Waters of the United States," Water Management Division, EPA Region 6, Dallas, Texas. (EPA 1990, 012454)

EPA (U.S. Environmental Protection Agency), April 10, 1990. "Module VIII of RCRA Permit No. NM0890010515, issued to Los Alamos National Laboratory, Los Alamos, New Mexico," EPA Region VI, Hazardous Waste Management Division, Dallas, Texas. (EPA 1990, 001585)

LANL (Los Alamos National Laboratory), May 9, 1994. "Process Flow Reductions from Waste Minimization for Value Engineering Study," Los Alamos National Laboratory, Los Alamos, New Mexico. (LANL 1994, 076858)

LANL (Los Alamos National Laboratory), September 1998. "RFI Report for Potential Release Site 16-021(c)," Los Alamos National Laboratory document LA-UR-98-4101, Los Alamos, New Mexico. (LANL 1998, 059891)

LANL (Los Alamos National Laboratory), July 2002. "Interim Measure Report for Potential Release Site 16-021(c)-99," Los Alamos National Laboratory document LA-UR-02-4229, Los Alamos, New Mexico. (LANL 2002, 073706)

LANL (Los Alamos National Laboratory), September 2003. "Phase III RFI Report for Solid Waste Management Unit 16-021(c)-99," Los Alamos National Laboratory document LA-UR-03-5248, Los Alamos, New Mexico. (LANL 2003, 077965)

LANL (Los Alamos National Laboratory), November 2003. "Corrective Measures Study Report for Solid Waste Management Unit 16-021(c)-99," Los Alamos National Laboratory document LA-UR-03-7627, Los Alamos, New Mexico. (LANL 2003, 085531)

LANL (Los Alamos National Laboratory), July 2007. "Corrective Measures Implementation Plan for Consolidated Unit 16-021(c)-99, Revision 1," Los Alamos National Laboratory document LA-UR-07-4715, Los Alamos, New Mexico. (LANL 2007, 098192)

Newman, B.D., D.D. Hickmott, and P. Gram, 2007. "Flow and High Explosives Transport in a Semiarid Mesa in New Mexico, USA," unpublished manuscript. (Newman et al. 2007, 095632)

NMED (New Mexico Environment Department), August 17, 2006. "Notice of Approval, Proposal to Drill Boreholes to Support the Corrective Measures Study and Remedy Selection at Solid Waste Management Unit (SWMU) 16-021(c)," New Mexico Environment Department letter to D. Gregory (DOE LASO) and D. McInroy (LANL) from J.P. Bearzi (NMED-HWB), Santa Fe, New Mexico. (NMED 2006, 093551)

NMED (New Mexico Environment Department), October 13, 2006. "Final Decision, Remedy Selection for Solid Waste Management Unit 16-021(c)," New Mexico Environment Department letter to D. Gregory (DOE LASO) and D. McInroy (LANL) from R. Curry (NMED), Santa Fe, New Mexico. (NMED 2006, 095631)

WoldeGabriel, G., R.G. Warren, D. Broxton, D. Vaniman, M.T. Heizler, E.C. Kluk, and L. Peters, 2001. "Episodic Volcanism, Petrology, and Lithostratigraphy of the Pajarito Plateau and Adjacent Areas of the Española Basin and the Jemez Mountains," *Volcanology in the New Mexico, NM Natural History and Science Bulletin,* Vol. 18, pp. 97-129. (WoldeGabriel et al. 2001, 092523)

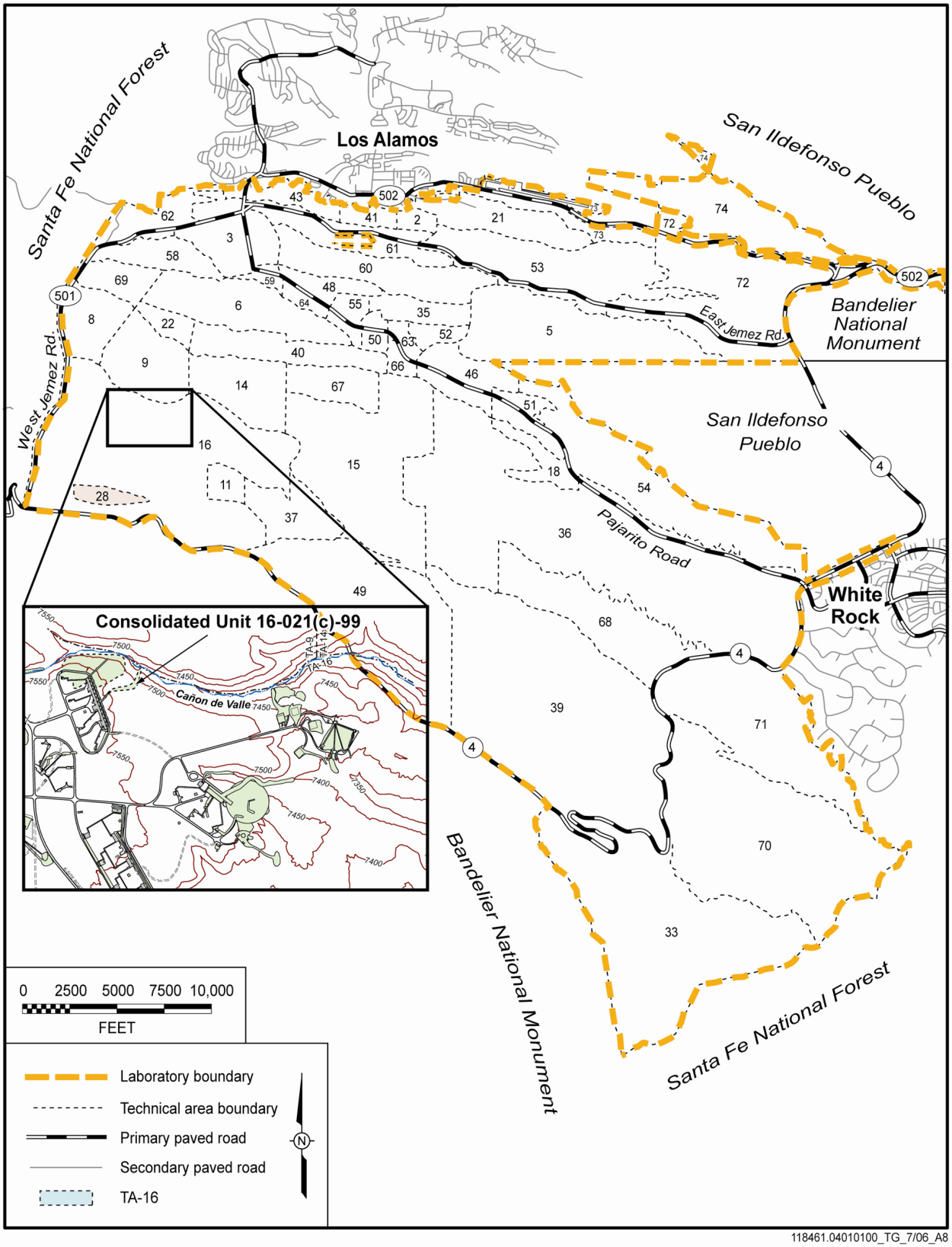

Figure 1.0-1 Location of TA-16 and Consolidated Unit 16-021(c)-99 with respect to Laboratory TAs and surrounding land holdings

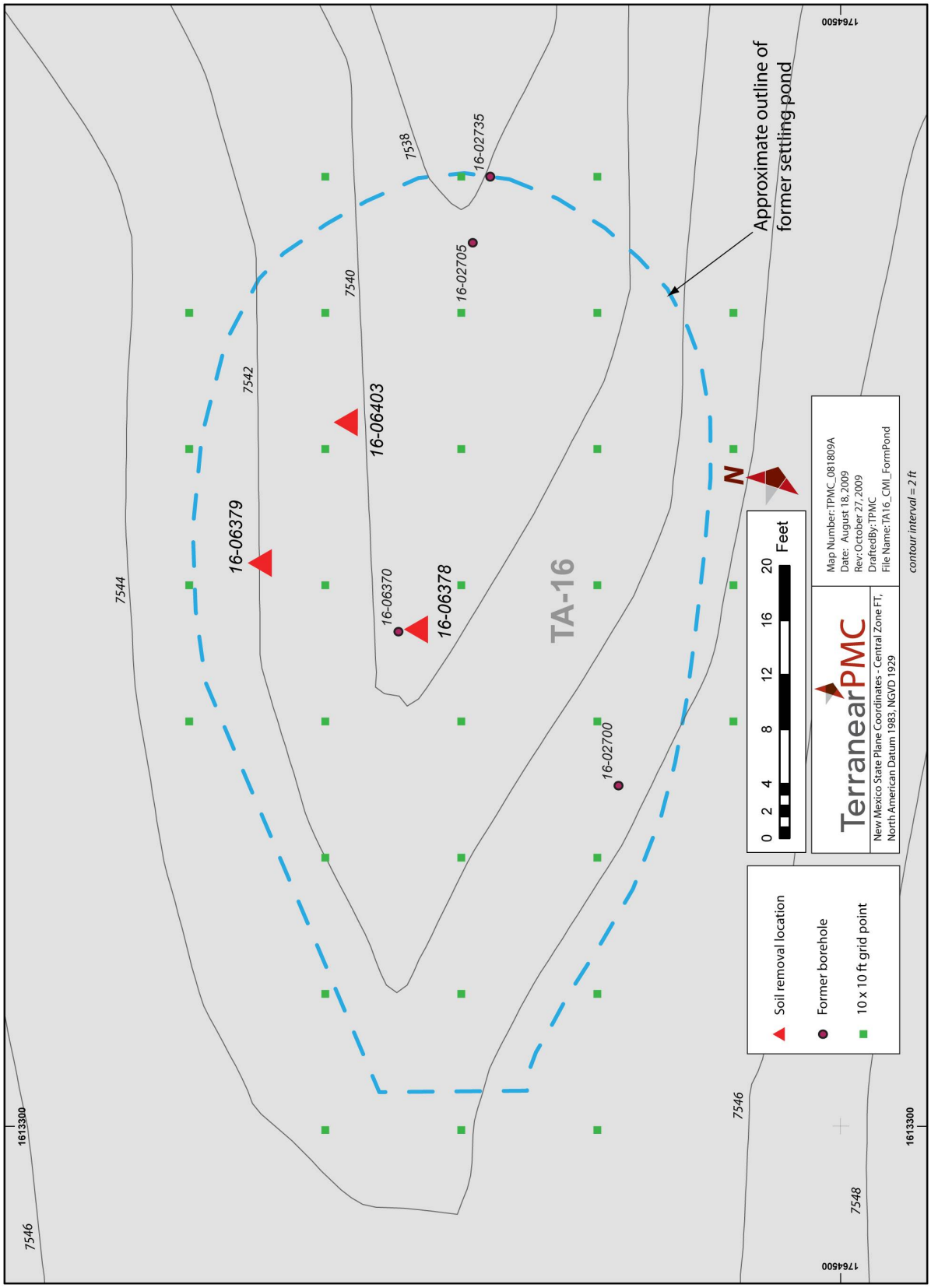

Figure 2.2-1 Location of former settling pond, previous boreholes, and proposed injection borehole locations

Appendix A

Daily Report Form for Drilling, Grouting, and Testing

Drilling, Grouting, and Testing	
Definable Work Feature:	
Date:	Time:
Report Completed By:	
TPMC Personnel Onsite (type and number):	
Subcontractor Personnel Onsite (type and number):	
Drilling: Provide Summary of Drilling Activities	
Type of Rig Used/ Method	
Driller	
Location(s)	
Quantify Footage Drilled	
Problems Encountered	
Other	
Grouting: Provide Summary of Grout Mixing and Injection	
Injection Hole Number	
Batch Number	
Water/cement ratio (w/c)	
Type of Cement	
Plasticizers Used	
Sampled for Testing	
Total Volume of Grout Mixed	
Total Volume	
Pressure	
Rate	
Other:	
Testing: Provide Summary of Grout Testing	
Injection Hole Number	
Batch Number	
Type of Test	
Results	
Accept/Reject	
Other:	

Appendix B

Equipment

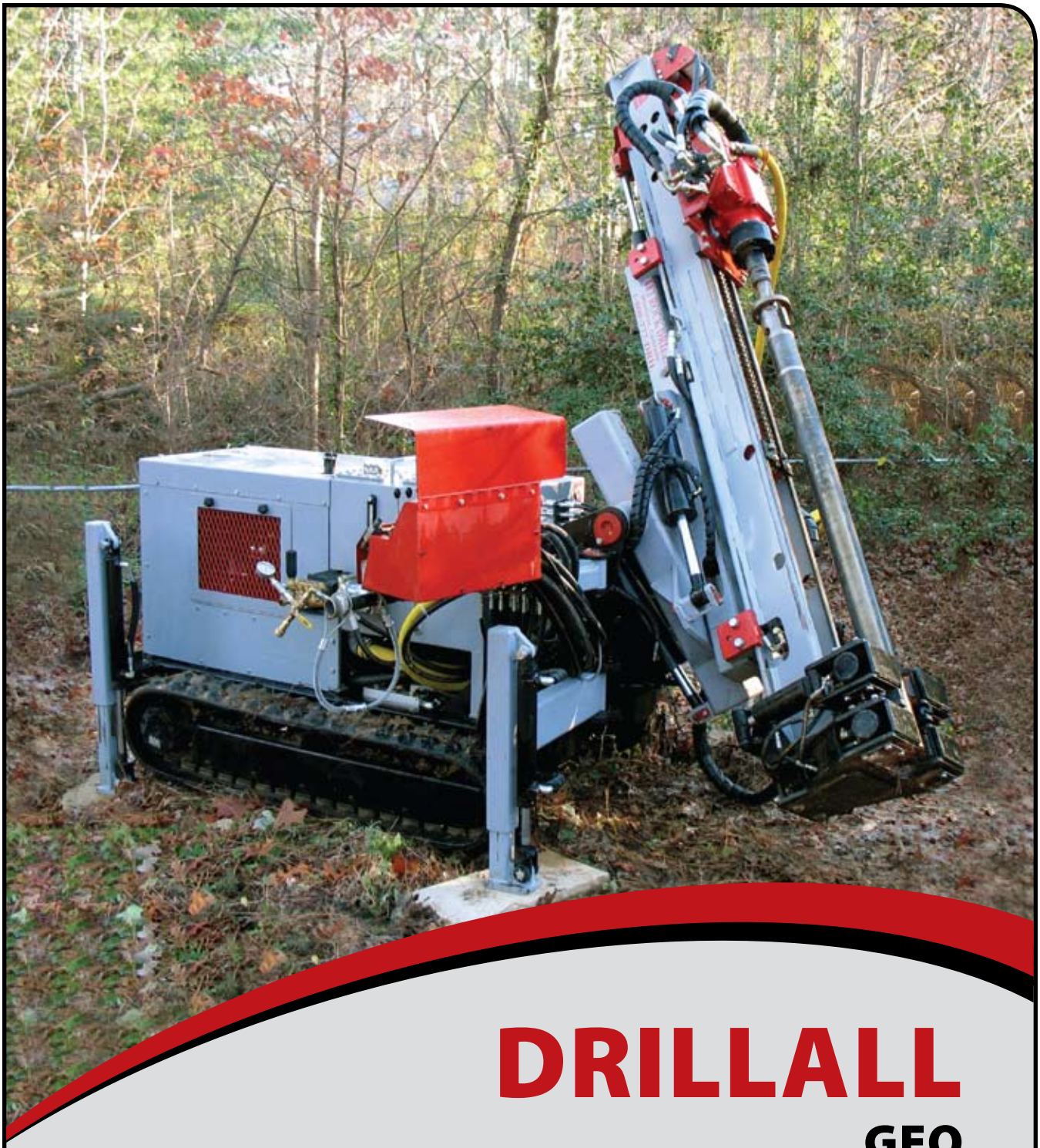

DRILLALL

GEO

TEI ROCK DRILLS

PO BOX 1309, MONTROSE, CO 81402

(800) 777-3745 • (970) 249-1515 • www.teirockdrills.com

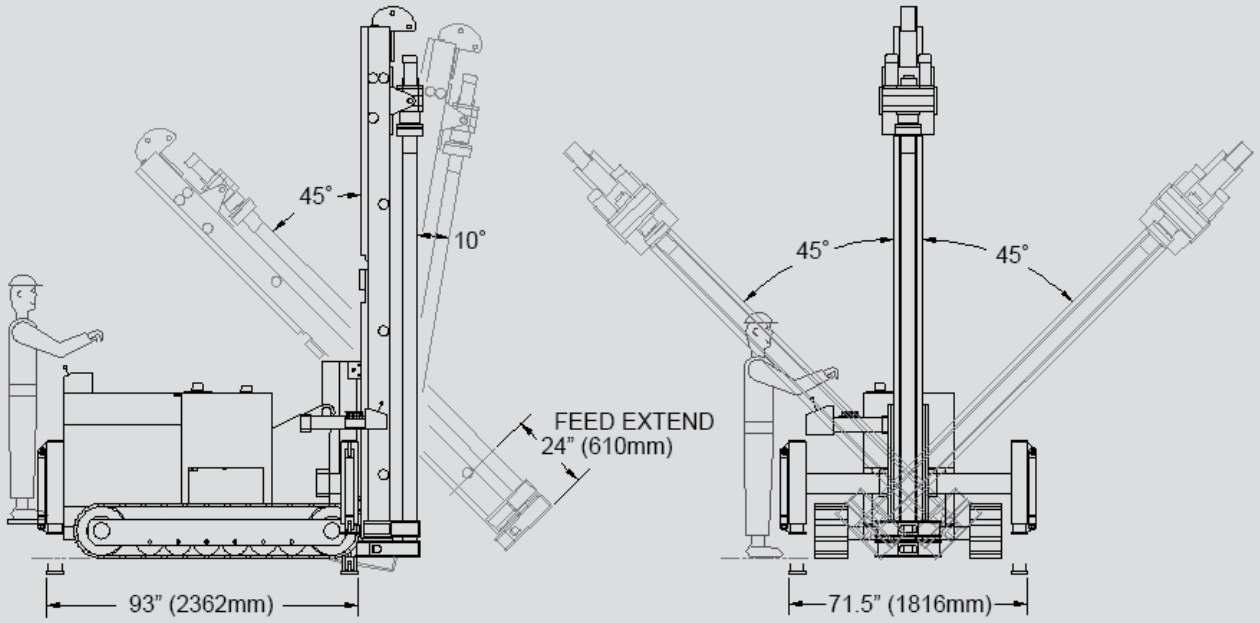

DRILL SPECIFICATIONS

- Machine Weight 6,450 lbs.
- Rotary Torque 5,000 ft/lbs.
- Mast Pullback 8,000 lbs.
- Drill Head Travel 6.5'

Standard Equipment

- Cummins 57 HP Diesel Engine
- Double Hydraulic Clamps
- Misting Pump
- Steel Frame with Rubber Tracks
- Load Sensing Hydraulic System

DRILLALL GEO DX WITH COMP

DRILLALL GEO CONTROL PANEL

SPECIFICATIONS SUBJECT TO CHANGE WITHOUT NOTICE.

fann®

Model 140
Mud Balance
Instruction Card

DESCRIPTION:

The Fann Four Scale Mud Balance is an accurate, self-contained measuring device used to determine the density of drilling fluid. It has a range of 7 to 24 pounds per gallon or Specific Gravity of 0.84 to 2.88. The Mud Balance consists of a constant-volume sample cup and lid connected to a balance arm that has four graduated scales. On one side are scales for measuring density in pounds per gallon (LB/GAL) and specific gravity (SP GR-g/cm^3). On the other side are scales for measuring pounds per cubic feet (LBS/CU.FT) and pounds per square inch per 1000 feet of depth (LBS/SQ.IN./1000 FT).

A rider is moved along the balance arm to indicate the scale readings. There is a knife edge attached to the arm near the balance cup, and a bubble level built into the knife edge to level the arm. A fulcrum is mounted on a base stand, if used, or in the plastic carrying case, if it is used.

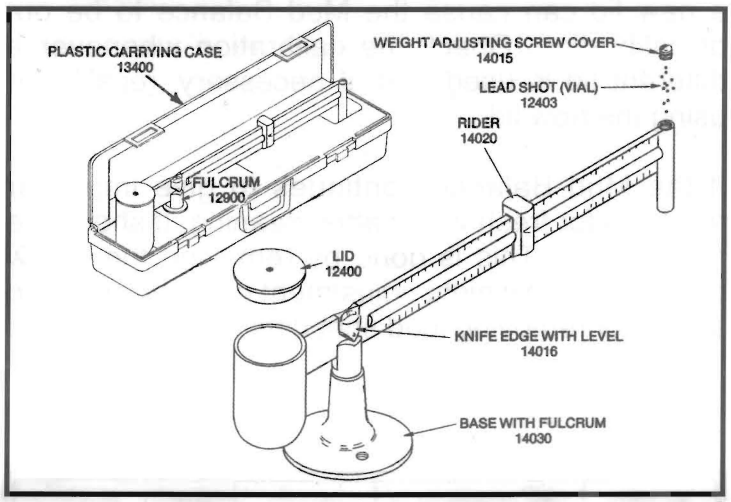

PROCEDURE:

1 The balance cup should be clean and dry before it is filled with the drilling fluid sample.

2. Drilling Fluid samples containing large amounts of gas should be deaerated using the Fann Deaerator before a density measurement is attempted.

3. Place the base stand or the carrying case on a surface that is approximately level.

4. Fill the balance cup with the sample to be tested. Tap the side of the balance cup several times

fann®

Product Information

MARSH FUNNEL VISCOMETER

The Marsh Funnel is a simple device for indicating viscosity on a routine basis. When used with a measuring cup the funnel gives an empirical value for the consistency of a fluid. The number obtained depends partly on the effective viscosity at the rate of shear prevailing in the orifice, and partly on the rate of gelation.

The **FANN No. 201 Marsh Funnel Viscometer** and **No. 202 Measuring Cup** are made of rugged, break-resistant plastic that resists temperature change deformation. The Measuring Cup, graduated in cubic centimeters and fluid ounces, is designed specifically for use with the Marsh Funnel. This easy to operate equipment is used for making rapid, on the spot measurements of fluids viscosity. The Marsh Funnel readings are only general measurements, but the frequent reporting of the Marsh Funnel Viscosity will indicate changes in the fluid viscosity that could require corrective action.

Funnel Viscosity is the ratio of the speed of the sample fluid as it passes through the outlet tube (the Shear Rate) to the amount of force (the weight of the fluid) that is causing the fluid to flow (the Shear Stress). Marsh Funnel Viscosity is reported as the number of seconds required for one quart of sample fluid to flow out of a full Marsh Funnel.

ORDERING INFORMATION

In addition to the Marsh Funnel, the viscosity measurement procedure requires a a graduated container (Measuring Cup) to receive the fluid as it flows out of the funnel, a means to measure elapsed time (Stopwatch), and a thermometer for measuring the temperature of the sample.

PART NO.	DESCRIPTION
206884	**Marsh Funnel Viscometer, Plastic No. 201**
206889	**Measuring Cup, Plastic No. 202**
206893	**Measuring Cup, Stainless Steel**
206898	**Digital Stopwatch**
206037	**Metal Dial Thermometer 0-220º F**
206044	**Digital Thermometer (Fahrenheit and Centigrade)**

Contact Fann Instrument Company for more information on our complete line of Drilling Fluids Testing Equipment

Fann Instrument Company
P O Box 4350
Houston, Texas USA 77210

Phone: 281-871-4482
Fax: 281-871-4358
Email: Fannmail@fann.com

©Copyright 2004 Fann Instrument Company All rights reserved.

COLSHEAR

PARTS
AND
OPERATING MANUAL

COLSHEAR AD1010H Colloidal Grout Plant
Hydraulic Powered

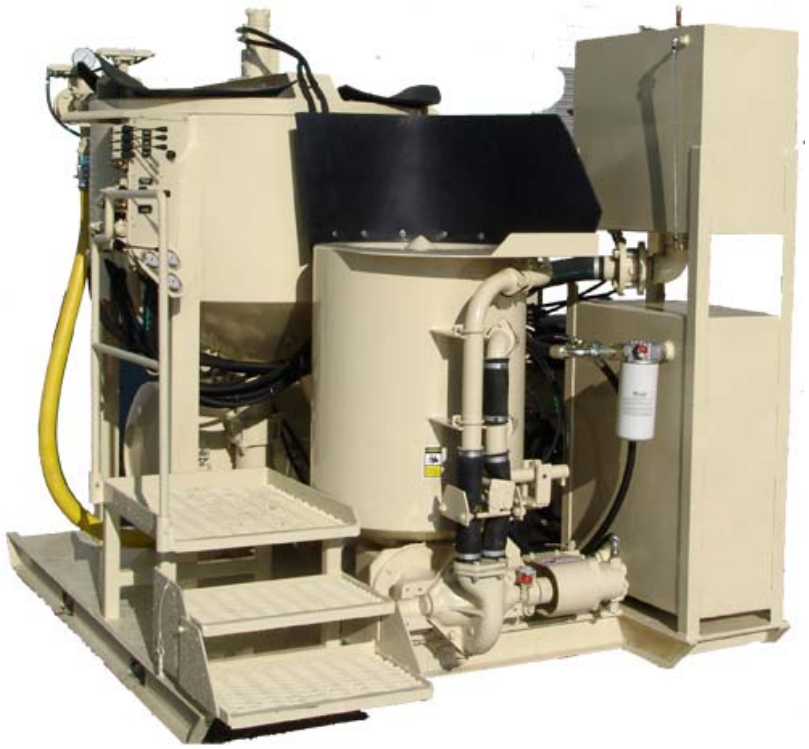

SERIAL NO.: AD1010H0020

These Operating Instructions must be carefully **READ** and **UNDERSTOOD**, prior to any attempt to work with the equipment.

Remember:

You are the one, who is responsible for your own personal safety.

GROUT PLANT

AD1010H - Colshear

From manufacture to product release, the AD1010H, a colloidal grout plant, is designed with quality, productivity, and ease of operation in mind. Each grout plant is inspected and tested for the highest level of quality assurance.

The Colcrete mixer produces a superior colloidal mix and is the industry leader. The vertical pump on the holding tank has been proven to be very durable, greatly reducing downtime. The use of the latest technology in hydraulics permits the operator to control all functions of the plant individually from one position. Pump output and all grout valves are controlled with ease.

SPECIFICATIONS

- **Engine:** 65 hp
- **Mixer Capacity:** 74 gal
- **Holding Tank Capacity:** 198 gal
- **Pump Output Flow:** 38 gpm
- **Pump Output Pressure:** 240 psi
- **Overall Dimensions:** 101 in x 85 in x 94 in

COLCRETE EURODRILL
Leaders In Ground Engineering Equipment

Atlantic Drill & Equipment Company, Inc.
P.O. Box 488 - 273 Lakeview Drive, Woodstock, Virginia 22664
Toll Free: 866-459-5309/ Tel: 540-459-5309/ Fax: 540-459-3071

www.AtlanticDrill.com

TABLE OF CONTENTS

		Page
Specification Page		2
Table of Contents		3
Introduction		5
1	**Description**	6
1.1	Equipment Applications	
1.2	Components	7
1.2.1	Parts Listing	8-25
2	**Safety**	26
2.1	General Safety Requirements	26
2.2	Equipment Safety	26
2.3	Major Hazards	26
2.4	Personal Protection	26
3	**Technical Specifications**	27
3.1	Dimensions	27
4	**Controls**	28
5	**Start Up and Shut Down**	29
5.1	Start Up	29
5.1.1	Initial Start Up	29
5.1.2	Visual Inspection before Starting	29
5.2	Starting the Equipment	29
5.3	Shut Down	30
6	**Operation**	31
7	**Transport**	32
7.1	Safety Guidelines for transport	32
7.2	Transport Data	32
8	**Maintenance**	33
8.1	Safety Guidelines for Maintenance	33
8.2	Maintenance Intervals	34
8.3	Hydraulic System	34
8.3.1	Hose Assemblies	34
8.3.2	Hydraulic Cylinders	34
8.3.3	Checking and Changing Hydraulic oil	35
8.3.4	Filter Replacement	36
9	**Cleaning the COLSHEAR AD1010H**	37
10	**Typical Mixes**	37
11	Hydraulic Schematic	38-40

INTRODUCTION

This manual has been made for the operators and the maintenance personnel.

In the Instruction Manual you will find a detailed description of the equipment, guidelines for transporting and operation of the equipment. Comprehensive instructions for operating and troubleshooting the equipment, and a detailed maintenance schedule. Technical Data, dimensions and weights are provided within this manual.

Identifying symbols

"Info" is used to highlight an operation, assembly or maintenance procedure. In general, observance of the information here will facilitate the work.

"Caution" is used to identify a hazard that can result in moderate injury and/or damage to the equipment if the instructions given in this manual are ignored or not correctly followed.

8 DESCRIPTION

1.1. EQUIPMENT APPLICATIONS

The equipment is designed and intended for the following applications only:

The COLSHEAR AD1010H is a combined Grout Mixing and Pump Plant.

Grout Mixing: Up to a sand/cement ratio of 4:1 and neat cement grouts with water/cement ratios as low as 0.36:1 without additives, or lower with plasticisers or superplasticisers providing flexibility required on site. The mixers are also very efficient at mixing bentonite and other clay products.

Observance of the instruction manual and all the documents supplied with the equipment is also considered part of the intended application.

Using the equipment in another or a further application than those stated here is not permitted and will be considered misuse.

The manufacturer does not assume any responsibility for damages resulting from misuse of the equipment.

1.2. COMPONENTS

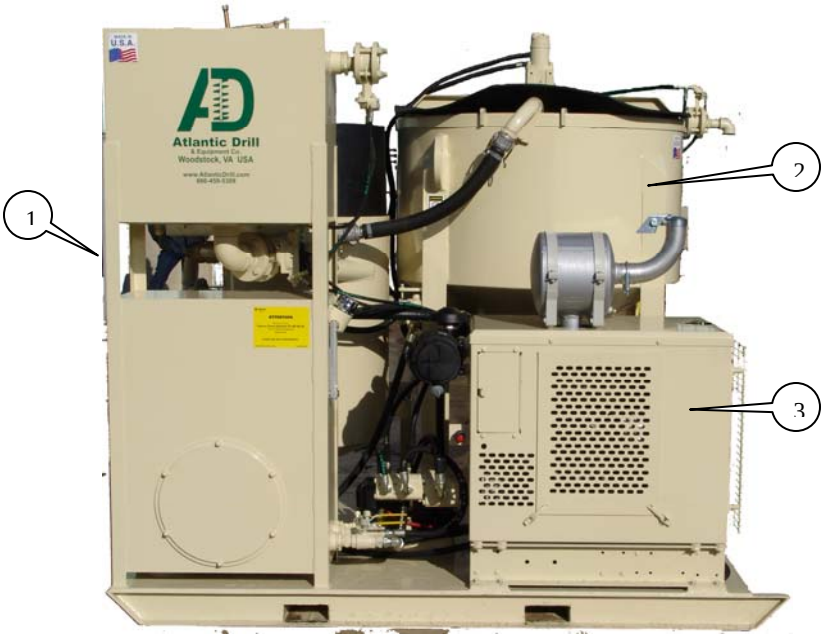

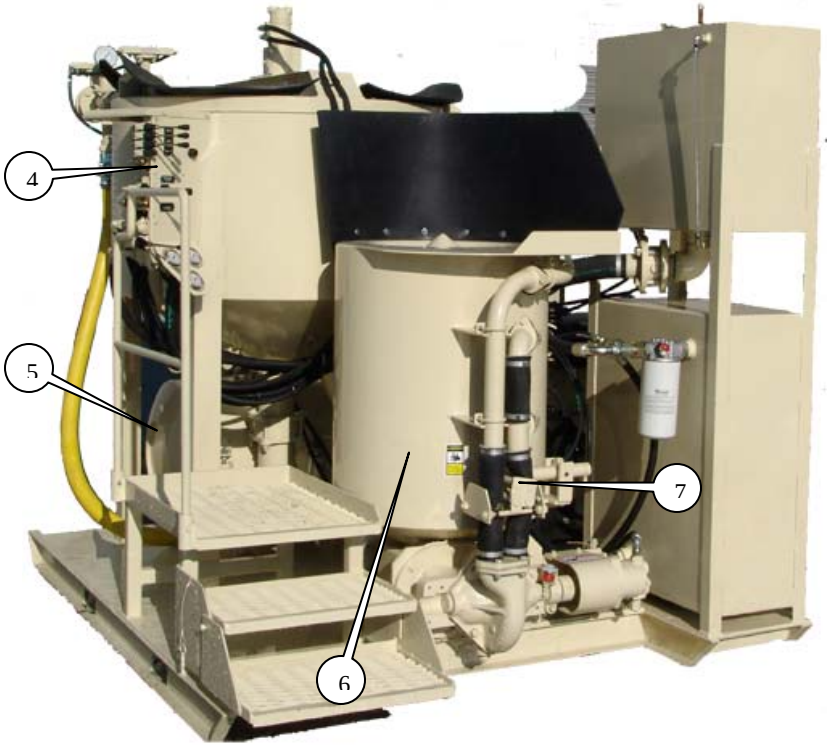

1.2.1. Parts Listing

		Page
1.	Water Tank and Hydraulic Tank assembly	8
	1a. Water Tank Assembly	9
	1b. Water transfer valve assembly	10
	1c. Hydraulic tank assembly	11
	1d. Hydraulic filter assembly	12
2.	Grout Holding Tank	13
	2a. Mono Pump assembly	14-15
	2b. Discharge and Recirculation Assembly	16
	2c. Mono Pump drive assembly	17
3.	Diesel Engine	18
	3a. Engine Oil Filter	19
	3b. Ignition Panel	20
4.	Hydraulic Controls	21
5.	Fuel Tank	22
6.	Mixer Tank	23
	6a. Mixer Assembly	24
7.	Pinch Valve Assembly	25
11.	Hydraulic Schematic	38
12.	Hydraulic List	39-40

9 Water and Hydraulic Tank assembly

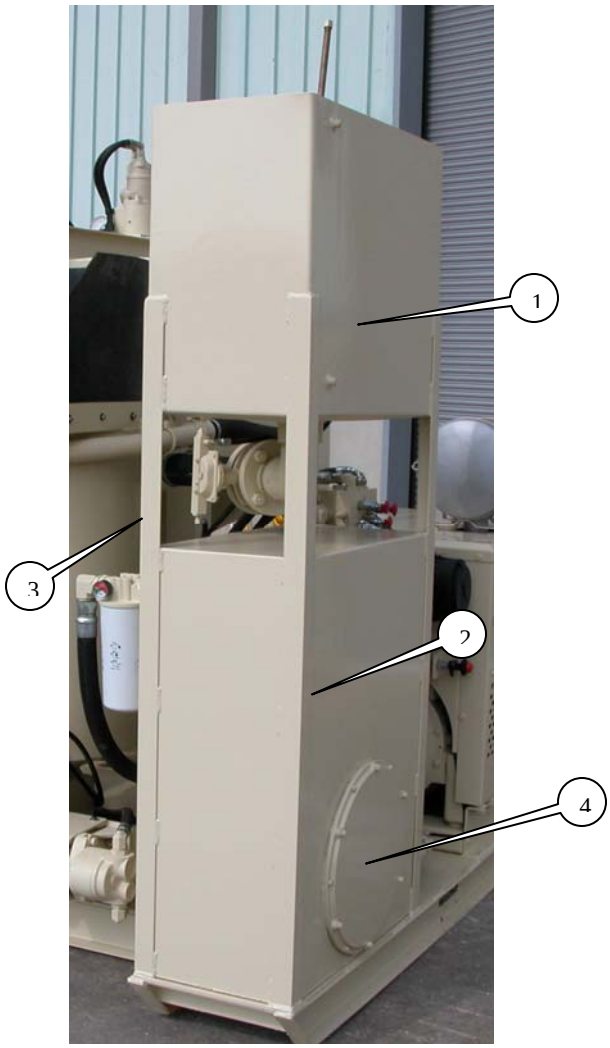

ITEM	PART NO.	DESCRIPTION	QTY.
1	HB2400006	WATER TANK	1
2	HB2400005	HYDRAULIC TANK	1
3	W2404948	WATER & HYDRAULIC TANK WELDMENT	1
4	HB2190230	CLEAN OUT DOOR	1

1a. Water Tank assembly

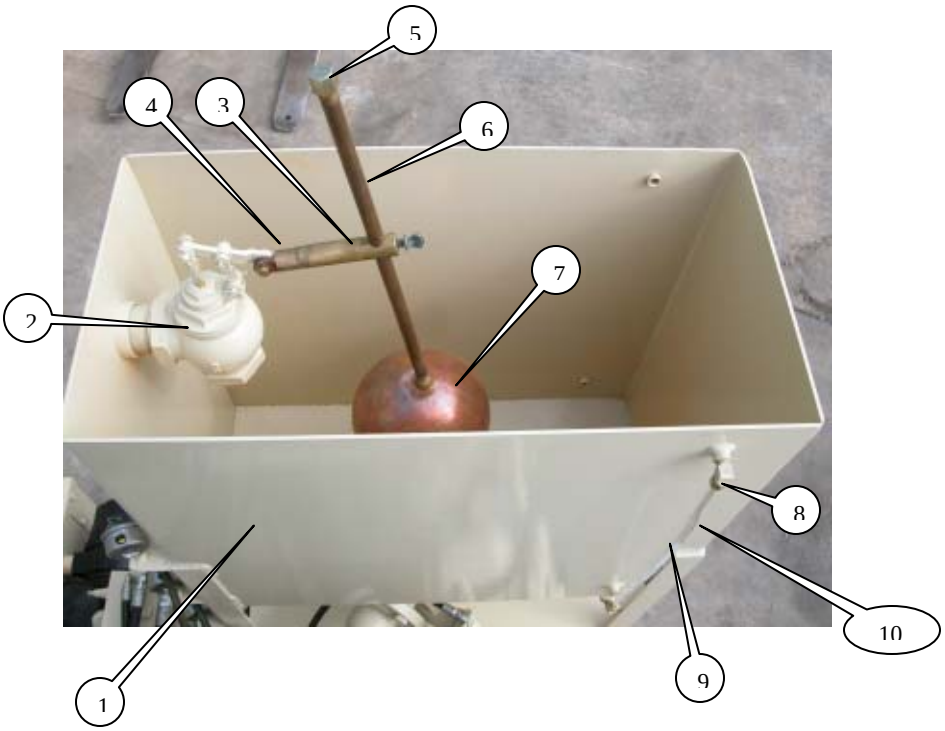

ITEM	PART NO.	DESCRIPTION	QTY.
1	HB2400006	WATER TANK	1
2	HB2190261	INLET VALVE ASSEMBLY	1
3	W5066236	ADJUSTING STEM	1
4	W2995917	BRACKET ASSY, FLOAT ARM EXT.	1
5	HB2230010	TUBE CAP	1
6	W2198214	FLOAT VALVE ROD	1
7	W2198209	FLOAT BALL	1
8	W2235333	¼’’ PVC ADAPTER	2
9	W2235331	SIGHT TUBE	1
10	W2996000	DECAL WATER LEVEL INDICATOR	1

.

1b. Water transfer valve assembly

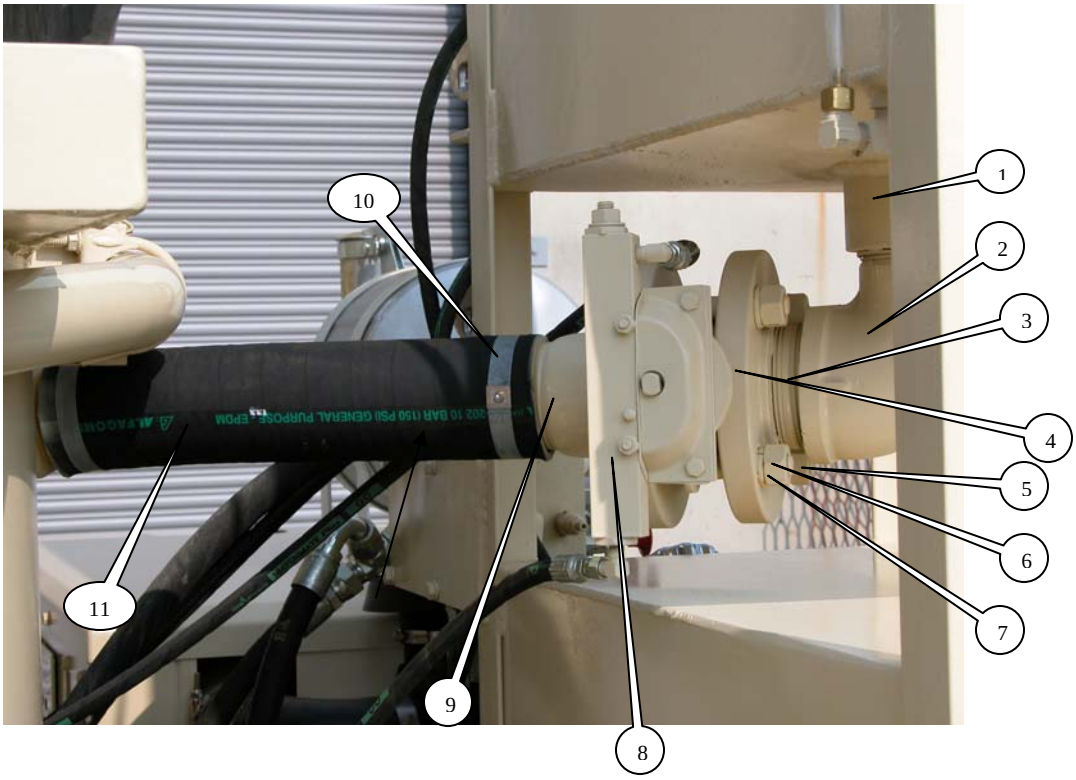

ITEM	PART NO.	DESCRIPTION	QTY.
1	W2235691	HALF COUPLING	1
2	W2230339	3” STREET EL	1
3	HB2230005	3” NIPPLE	1
4	HB2230003	3” PIPE FLANGE	2
5	W7010140	HEX BOLT 5/8” x 4 ½”	4
6	W7180007	HEX NUT 5/8”	4
7	W7260008	LOCK WASHER 5/8”	4
8	HB2230016	BUTTERFLY VALVE	1
9	HB2190199	3” NPT HOSE BARBED NIPPLE	1
10	W2192276	3” HOSE CLAMP	2
11	R1200111	3” HOSE	1

1c. Hydraulic Tank

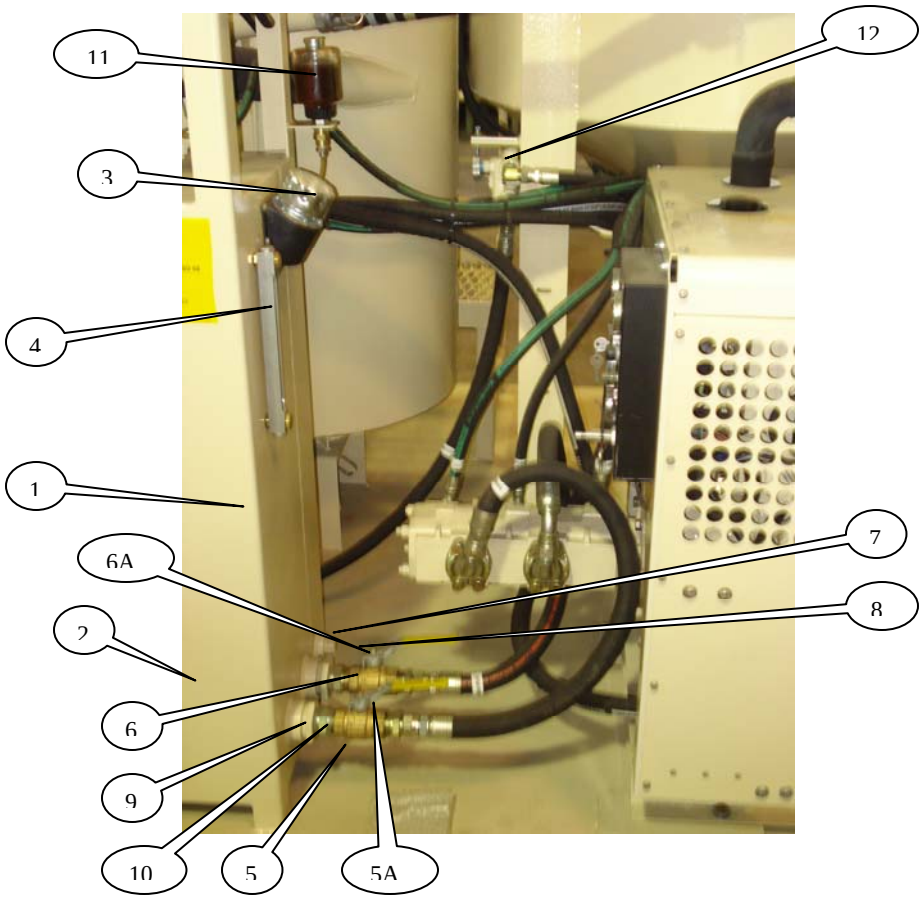

ITEM	PART NO.	DESCRIPTION	QTY.
1	HB2400005	HYDRAULIC TANK	1
2	HB2190230	CLEAN OUT	1
3	HB2190232	FILLER CAP	1
4	HB2190231	SIGHT GLASS	1
5	HB2190208	LOCKING SUCTION VALVE	2
5A	HB2190209	LOCKING KIT	2
6	HB2190210	LOCKING SUCTION VALVE	1
6A	HB2190211	LOCKING KIT	1
7	HB2190206	SUCTION STRAINER	1
8	W2230393	NPT NIPPLE	2
9	HB2190207	SUCTION STRAINER	2
10	W2230396	NPT HEX NIPPLE	2
11	W5534989	IV BOTTLE OILER ASSEMBLY	1
12	W2193000	COMPENSATED CONTROL VALVE	1

1d. Hydraulic Oil filter

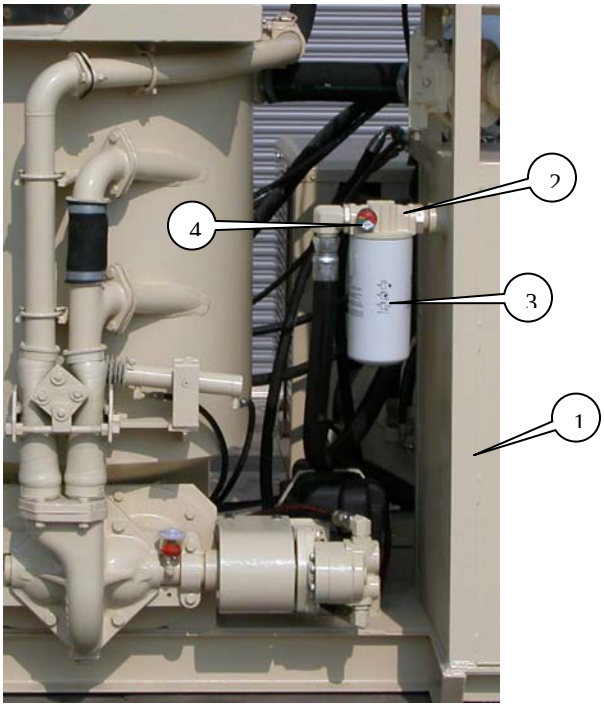

ITEM	PART NO.	DESCRIPTION	QTY.
1	HB2400005	HYDRAULIC TANK	1
2	HB2190218	HYDRAULIC FILTER HOUSING	1
3	HB2190219	HYDRAULIC FILTER ELIMENT	1
4	HB2190220	DIRT INDICATOR	1

2. Grout Holding Tank Capacity 198 gallons

2a. Mono Pump Assembly

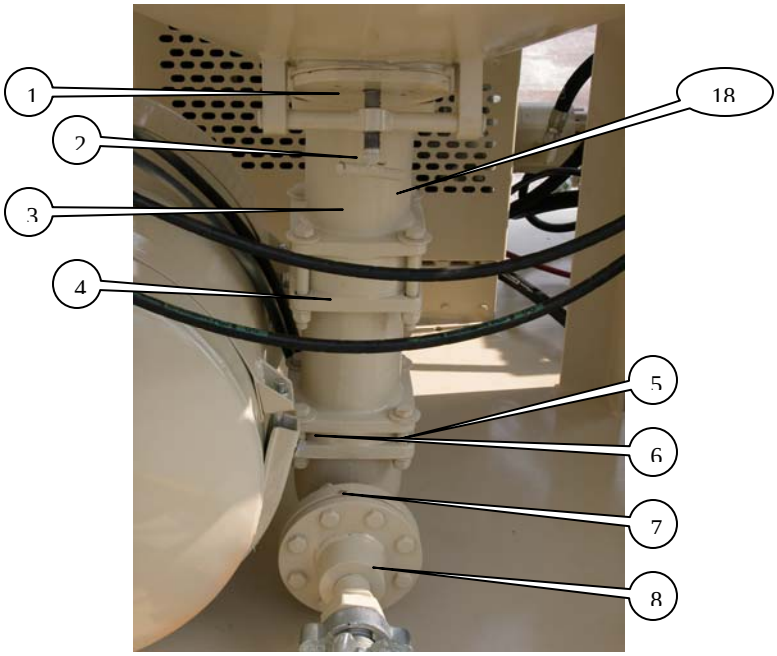

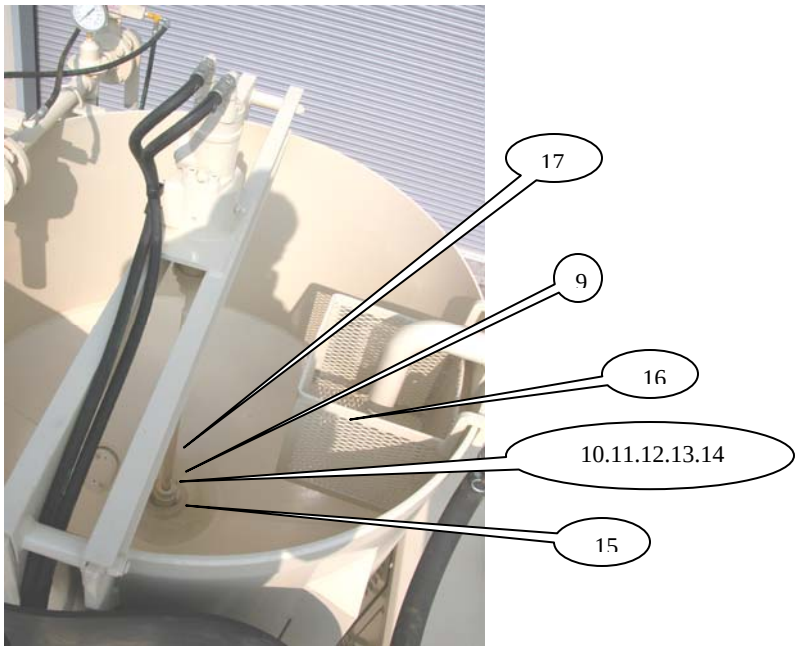

ITEM	PART NO.	DESCRIPTION	QTY.
1	HB1010-00085	COVER PLATE	1
2	HB000039	T-BOLT	1
3	CC301072	BARREL	2
4	CC301073	SPACER	1
5	CC301071	END COVER	1
6	CC301049	GASKET	1
7	W5616147	GASKET	1
8	CC301074	FLANGE	1
9	CC301067-36	CONNECTING ROD	1
10	CC301019	SEAL	2
11	CC301018	WASHER	4
12	CC301017	PIN CAP	4
13	CC301016	PIN	2
14	CC301008	STATOR	1
15	CC301010	ROTOR	1
16	HB000048	GROUT BASKET	1
17	W5995874	AGITATOR	1
18	NSTW5995861	INSTALLATION COLMONO PUMP	1

2d. Discharge and Recirculation Assembly

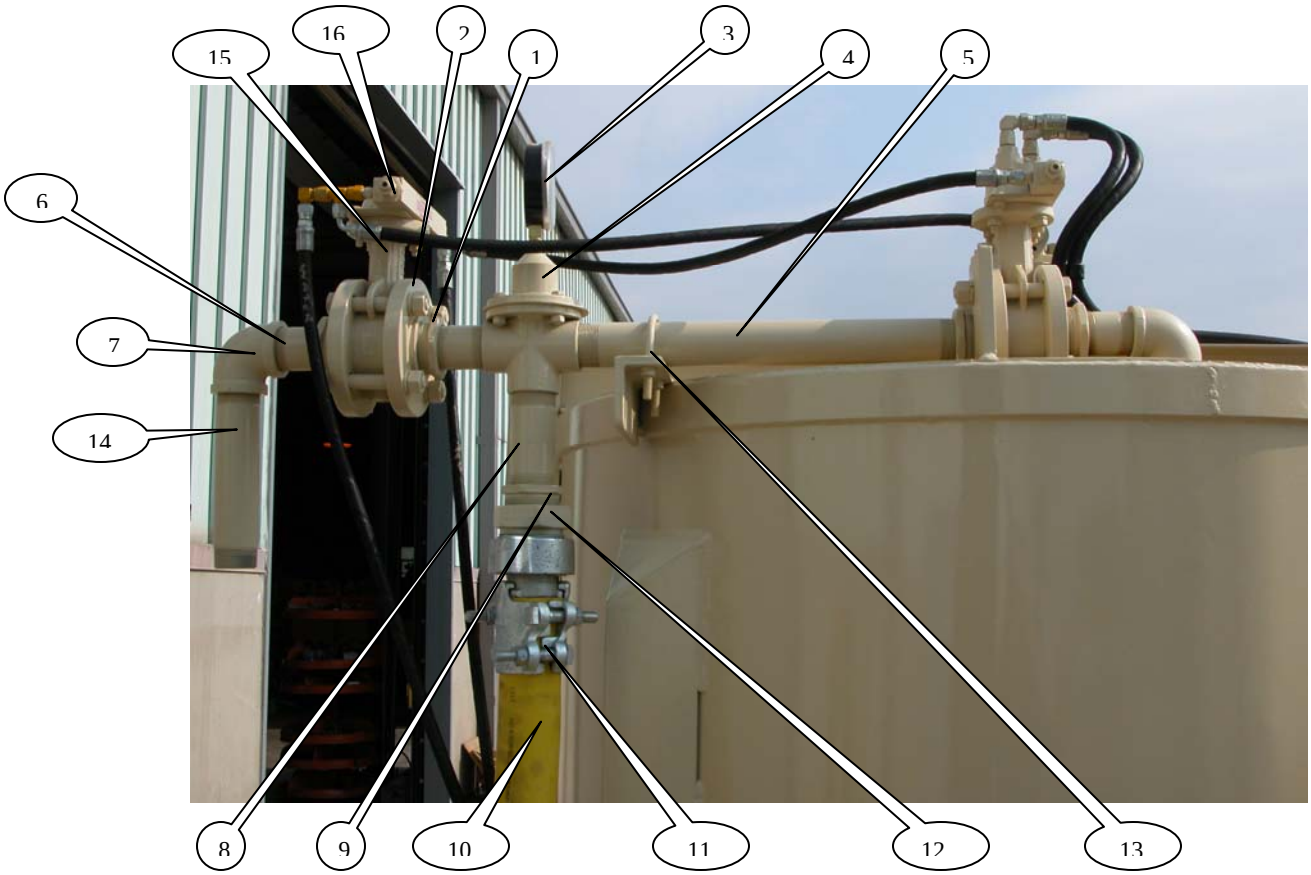

ITEM	PART NO.	DESCRIPTION	QTY.
1	HB2230004	PIPE FLANGE	1
2	HB2230015	BUTTERFLY VALVE	2
3	HB2190242	PRESSURE GAUGE	2
4	CC301030	GAUGE SAVER	1
5	HB2230018	PIPE	1
6	HB2230014	PIPE	3
7	W2230287	ELBOW	2
8	W2230527	PIPE	1
9	HB2230017	BUSHING	1
10	R1120612	HOSE	2
11	HB2190270	HOSE END ASSEMBLY, CLAMP	2
11A	HB2190269	BARBED HOSE END W/NUT	2
12	HB2230017	BUSHING	4
13	W2060000	U-BOLT	1
14	W2230531	PIPE	2
15			
16			

2c. Mono Pump drive assembly

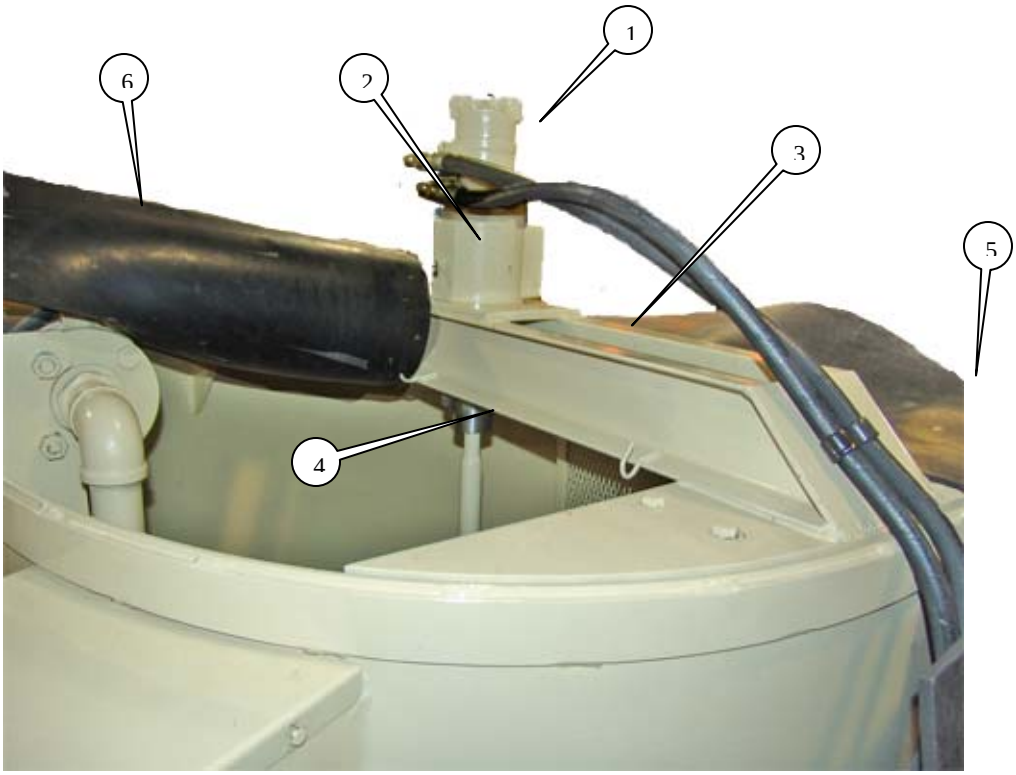

ITEM	PART NO.	DESCRIPTION	QTY.
1	HB2190216	GROUT HOLDING TANK MOTOR	1
2	HB2190233	LOAD ADAPTER	1
3	W5066240	MOTOR MOUNT	1
4	W5995907	ADAPTOR SHAFT	1
5	W2160001	RUBBER SPLASH GUARD W/0 NOTCH	1
6	W2160002	RUBBER SPLASH GUARD W/NOTCH	1

10 John Deere Diesel Engine

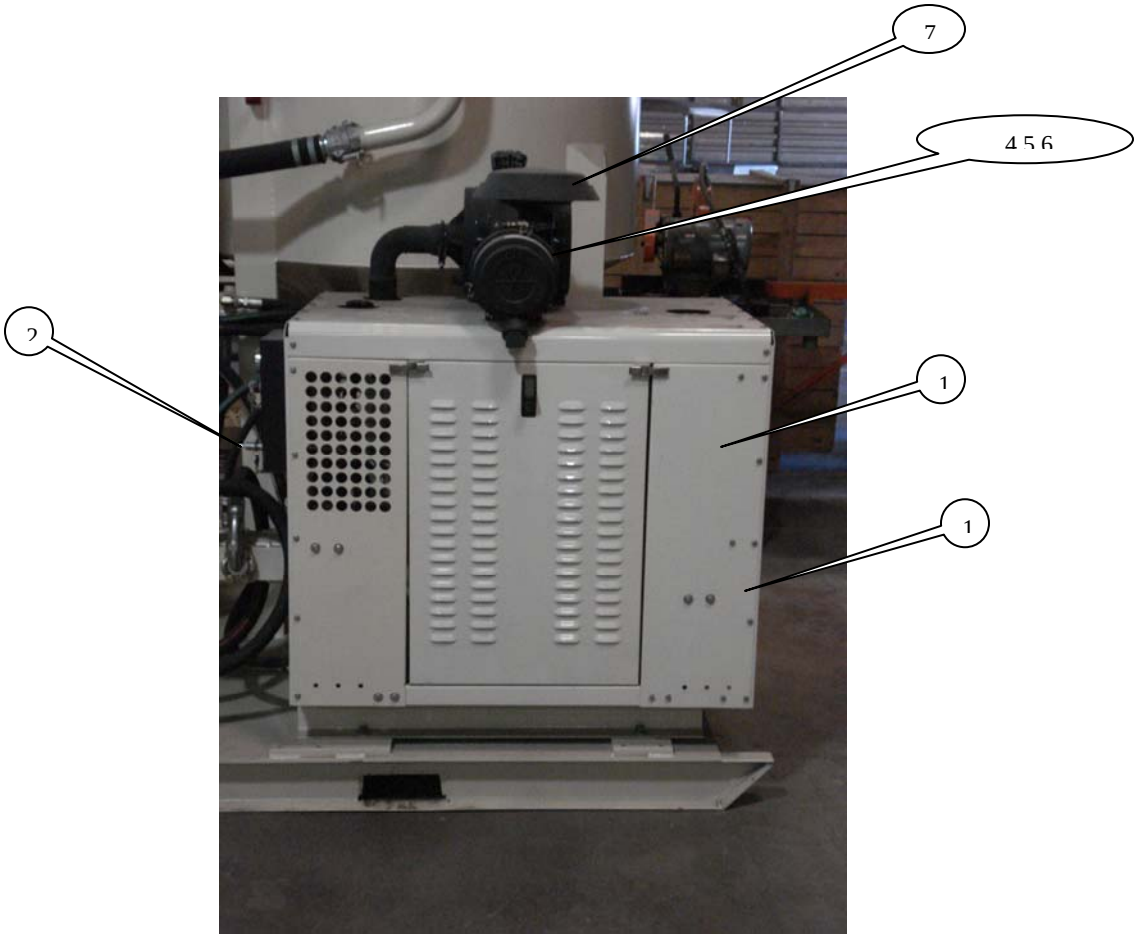

ITEM	PART NO.	DESCRIPTION	QTY.
1	HB2240002	ENGINE	1
2	W2125070	THROTTLE JOHN DEERE	1
3	HB2190217	HYDRAULIC OIL COOLER	1
4	W2245327-F	AIR FILTER HOUSING	1
5	W2240002-F	PRIMARY AIR FILTER	1
6	W2240001-F	AIR FILTER	1
7			
		SEE ENGINE MANUAL FOR DETAILS	

3a, Engine Fuel/Oil

ITEM	PART NO.	DESCRIPTION	QTY.
1	W2240003-F	OIL FILTER	1
2		ENGINE ENGINE DIP STICK	1
3	W2996062-F	WATER SEPERATOR /FUEL FILTER	1
4		SEE ENGINE MANUAL FOR DETAILS	

3b. Ignition Panel

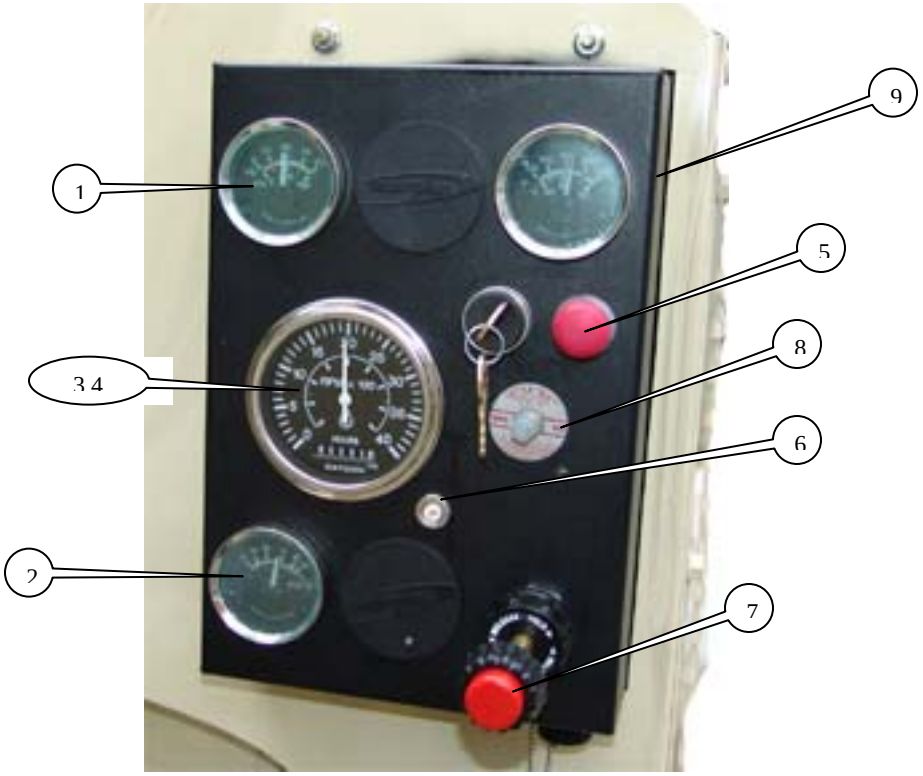

ITEM	PART NO.	DESCRIPTION	QTY.
1	W2245353	WATER TEMPERATURE GAUGE	1
2	W2245351	VOLT METER	1
3	HB2410109	TACHOMETER AND HOUR METER	1
4	W2996223-F	MAGNETIC PICK UP FOR TACHOMETER	1
5	W2996191	INGNITION SWITCH	1
6		FUSE AND FUSE HOLDER	1
7	W2125070	THROTTLE JOHN DEER	1
8		TATTLE TAIL BUTTON	
9	W2245352	OIL PRESSURE GUAGE	1
10		OIL PRESSURE SENDING UNIT	1

11. Hydraulic Controls

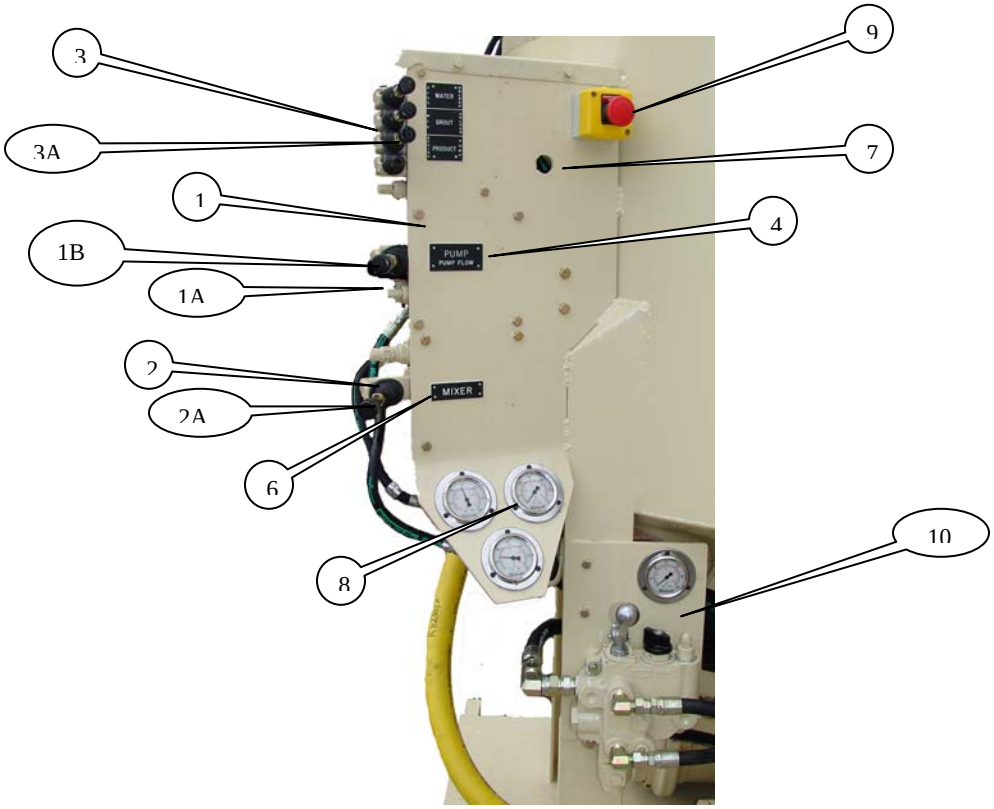

ITEM	PART NO.	DESCRIPTION	QTY.
1	HB2190221	VALVE (MONO PUMP)	1
1A		FLOW CONTROL KNOB	1
1B		VALVE HANDLE	1
2	HB2190212	VALVE (MIXER)	1
2A	HB2190213	VALVE HANDLE	1
3	HB2190223	VALVE (WATER AND GROUT VALVES)	1
3A	HB2190224	VALVE HANDLE	3
4	HB2990001	MONO PUMP FUNCTION TAG SET	1
5	HB2990002	W & G VALVE FUNCTION TAG	1
6	HB2990003	MIXER FUNCTION TAG	1
7	W2198152	PRESSURE REDUCING VALVE (OPTIONAL	1
8	HB2190204	PRESSURE GAUGE	3
9		EMERGENCY SHUT DOWY	1
10		AUX. HI-PRESS. PUMP CONTROL (OPTIONAL	1

12 Fuel Tank

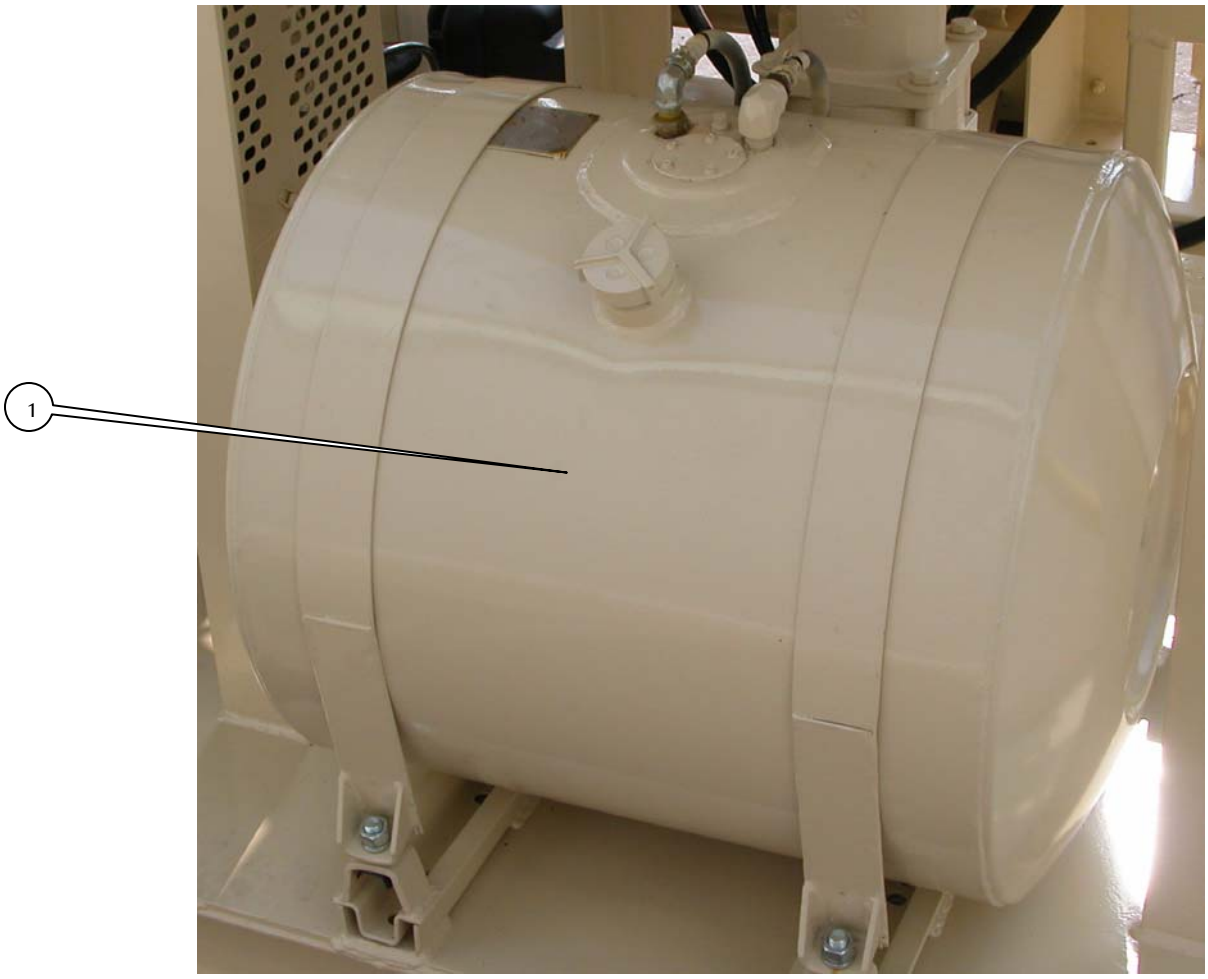

ITEM	PART NO.	DESCRIPTION	QTY.
1	HB2400007	FUEL TANK	1
1A		FILLER CAP	1

11 Mixer Tank

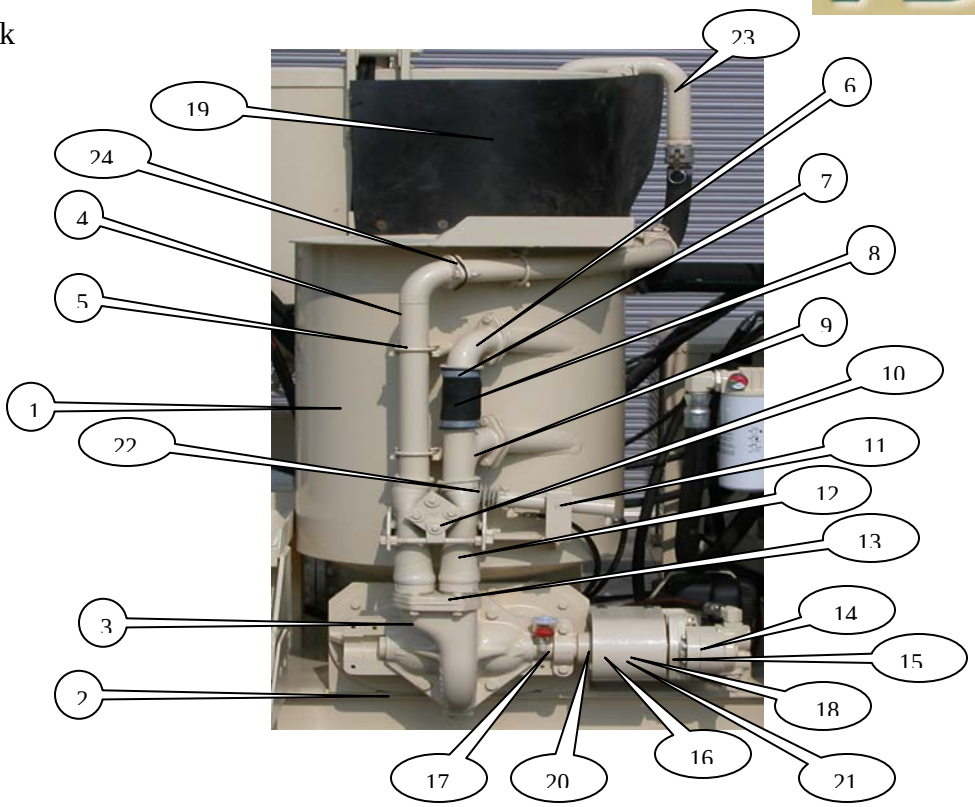

ITEM	PART NO.	DESCRIPTION	QTY.
1	W5534980	MIXER TANK	1
2	CC0101231	MK II MIXER COMPLETE	1
3	CC101059	DOUBLE NIPPLE DISCHARGE FLANGE	1
4	W5995838	PIPE	1
5	HB2290000	CLAMP	2
6	W5995840	FLANGED ELBOW	1
7	W2197545	HOSE CLAMP	6
8	CC1001001	HOSE	1
9	CC101056	PITCHER TEE	1
10	HB5990002	PINCH VALVE COMPLETE	1
11	HB2190225	HYDRAULIC CYLINDER	1
12	CC1001001	HOSE	2
13	W5616148	GASKET	1
14	HB2190214	MOTOR	1
15	HB2190215	MOTOR MOUNT	1
16	HB2190228	COUPLER (NOT SHOWN)	1
17	W5534989	OIL FILL COMPLETE	1
18	HB5170004	COUPLER COVER	1
19	W2160000	SPLASH I	1
20	CC101220	SHAFT CARTRIDGE	1
21	W2198422	RUBBER FOR COUPLING	1
22	HB2190227	RUBBER ROD BOOT	1
23	W5995872	PIPE WELD'T, GROUT RETURN	1
24	W5616146	GASKET, GROUT PLANT FLANGE	1

6a. Mixer Assembly

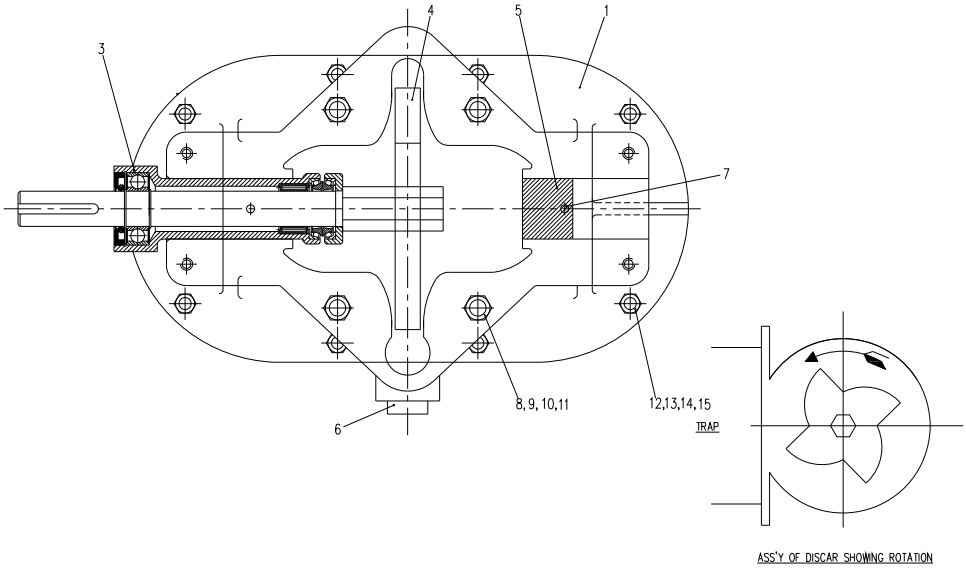

7. Pinch Valve Assembly

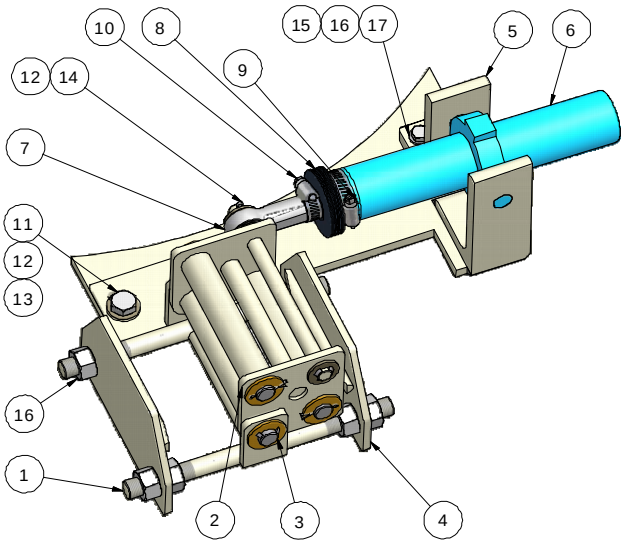

ITEM	PART NO.	DESCRIPTION	QTY.
1	HB5990000	FRAME, PINCH ROLLER	1
2	HB5060010	FRAME, PINCH ROLLER ASSEMBLY	1
3	HB5290005	PIN	1
4	HB5300000	PLATE	2
5	HB5060012	BRACKET, CYL.. MOUNT	1
6	HB2190225	HYDRAULIC CYLINDER	1
7	HB2190226	ROD END	1
8	HB2190227	BOOT	1
9	HB2190227-1	HOSE CLAMP, 1.75	1
10	HB2190227-2	HOSE CLAMP .75	1
11	W7010090	CAPSCREW, HXHD G8 ½”-13 X 1 ¼”	2
12	W7270006	WASHER, PLN REG. ½”	7
13	W7180005	NUT HEX REG GR8 ½”-13	2
14	W7280010	COTTER PIN STEEL 3/32D X 1”	2
15	W7010026	CAP SCREW, HXHD G8 5/16-18 X 1”	2
16	W7190007	NUT HEX TEG GR8 5/8-18 UNF	8
17	W7270003	WASHER PLN REG 5/16	2

3. SAFETY

3.1. General Safety Requirements

- The safety messages given in the manual of the equipment must be followed.

3.2. Equipment Safety

Equipped safety devices intend to provide the highest possible safety standard for this piece of equipment.

3.3. Major Hazards

- In mixing applications, the equipment operates with rotating parts. Be careful of rotating parts, being caught by a rotating part is deadly.
- The stability of the equipment must be watched carefully. If the equipment becomes unstable the equipment can fall violently causing severe personal injury or even loss of life.
- Be observant of oil spills from the hydraulic system. If there is a spill, find the cause and repair it. Oil spraying with high pressure can cause severe burns and poisoning.
- Engine and hydraulic oils become very hot from operation. Touching any component in any of these systems can cause burns.
- Be sure that the equipment is properly shut down before you begin maintenance, repair or cleaning it.
- To prevent abuse and unauthorized starting of the equipment, shut it down and remove the ignition key.

12 Personal Protection

Long hair may not be worn loose; clothing may not be loose fitting. Necklaces, bracelets or rings may not be worn because of the danger of being caught by protruding parts or being drawn into the mixer. All personnel working with this equipment must wear appropriate protection, such as the items below.

- Protective Clothing to prevent chemical burn
- Protective Helmet
- Protective Boots
- Hearing Protection where noise is greater than 85 dB
- Work Gloves
- Protective Eyewear
- Respirator for use when dusts are present

4. TECHNICAL SPECIFICATIONS

Engine:	Cummins 65 HP	48 KW
Mixer Tank Capacity:	74 GAL	280 L
Holding Tank Capacity:	198 GAL	750 L
Pump Flow:	38 GPM	144 L/minute
Pump Pressure:	240 PSI	16.5 Bar

Dimensions

L – 99” x W – 87” x H –91” L – 2515mm x W 2210 x 2311

Weight: 6000 LBS. 2722 kg

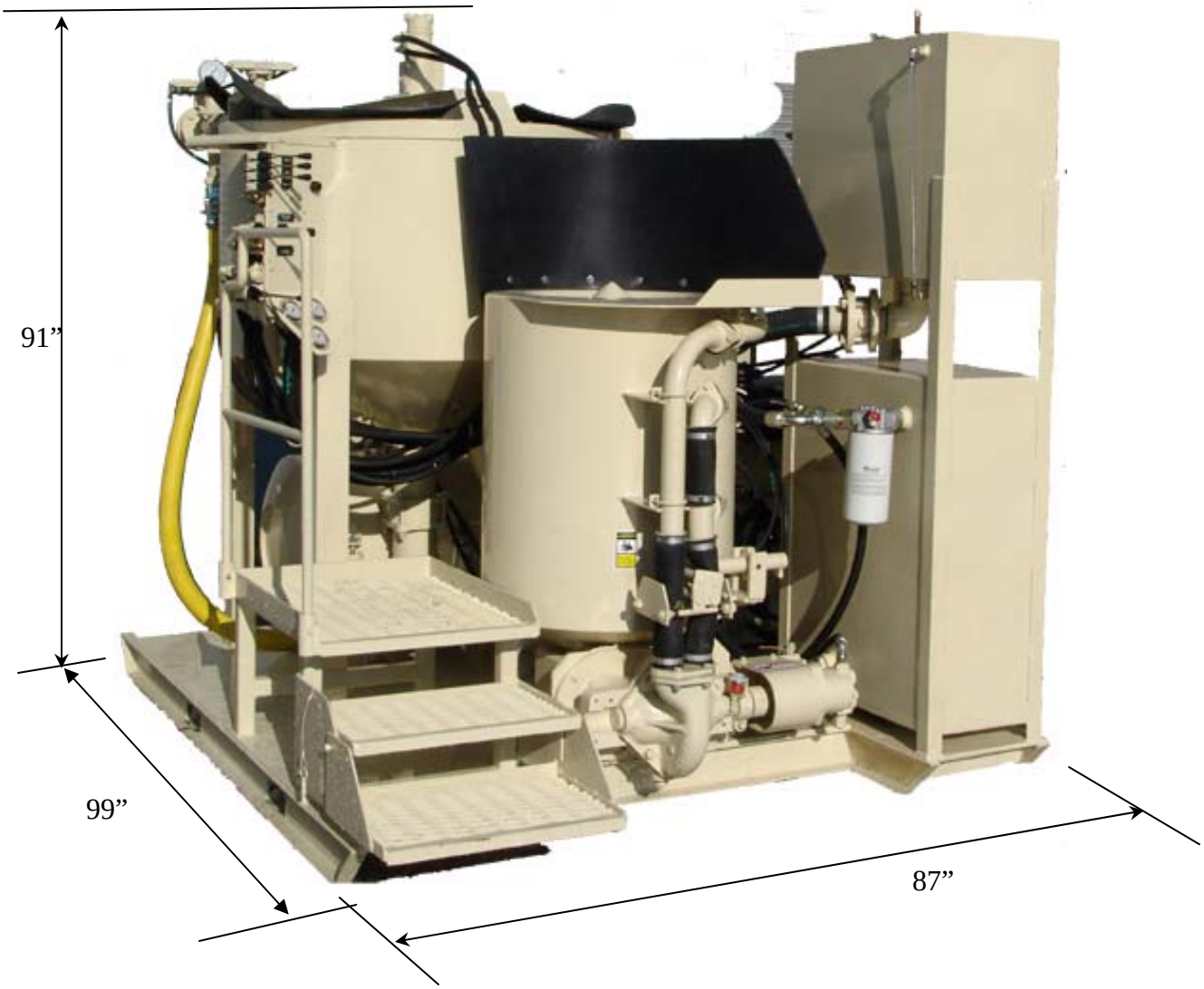

5. CONTROLS

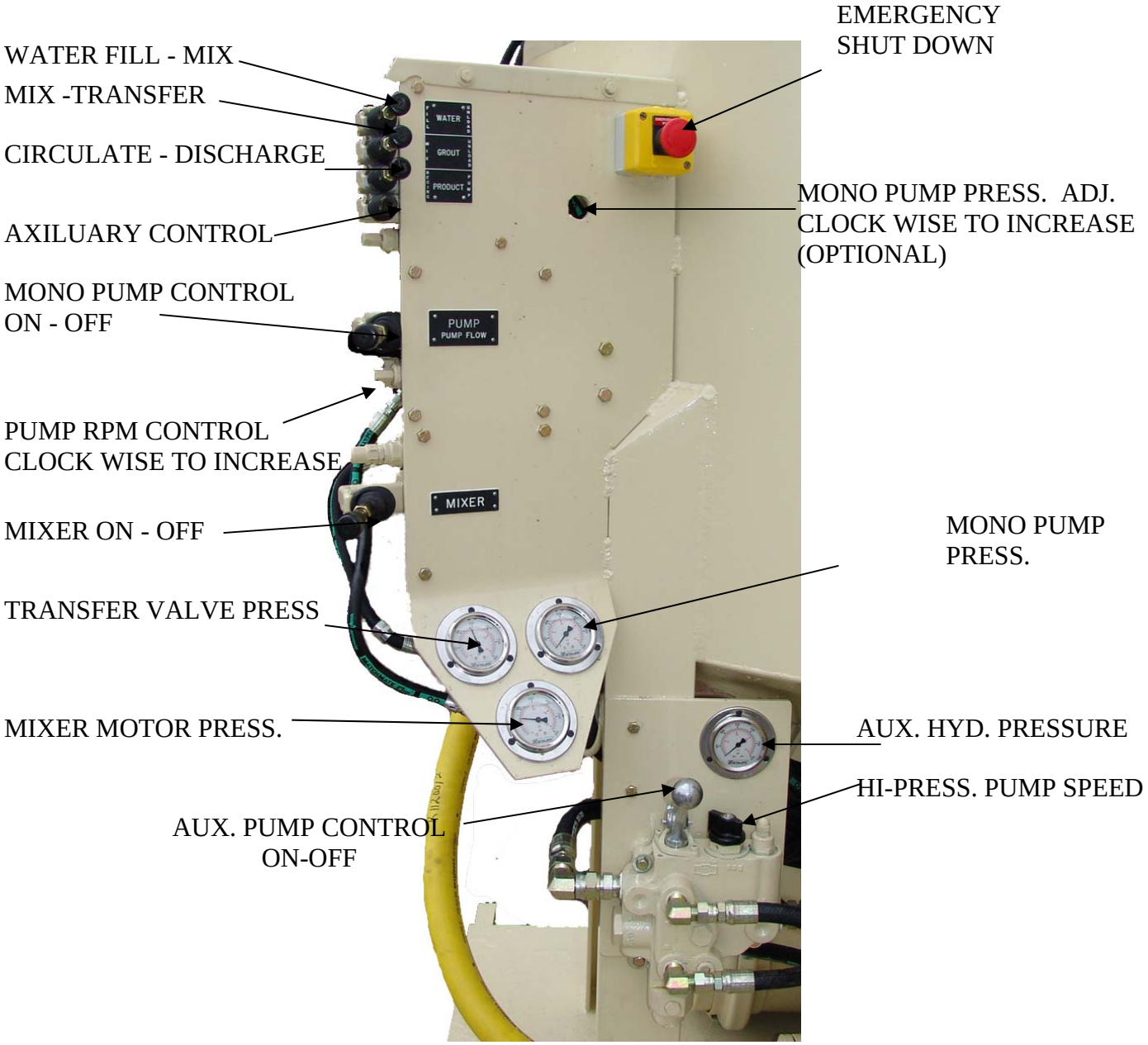
EMERGENCY SHUT DOWN
WATER FILL - MIX
MIX -TRANSFER
CIRCULATE - DISCHARGE
AXILUARY CONTROL
MONO PUMP PRESS. ADJ. CLOCK WISE TO INCREASE (OPTIONAL)
MONO PUMP CONTROL ON - OFF
PUMP RPM CONTROL CLOCK WISE TO INCREASE
MIXER ON - OFF
MONO PUMP PRESS.
TRANSFER VALVE PRESS
MIXER MOTOR PRESS.
AUX. HYD. PRESSURE
HI-PRESS. PUMP SPEED
AUX. PUMP CONTROL ON-OFF
WATER
GROUT
PRODUCT
PUMP
PUMP FLOW
MIXER

6. START UP and SHUT DOWN

6.1. Start Up

6.1.1. Initial Start Up

The initial start up of the equipment concerns the safety, productivity and life of the equipment. The operator of the equipment must be familiar with all the controls and their capabilities.

6.1.2. Visual Inspection Before Starting

A visual inspection and thorough check is required before putting the equipment into operation:

- Inspect the entire machine.
    - Loose bolts.
    - Hydraulic leaks and fluid spills.
    - All clean out covers and plugs are in place.
    - Be certain that there is liquid in the mixing and pump tanks before starting.
    - Check all components for wear.
    - Check all contained oils and fluids have the proper level.
    - Be certain that all controls are in the neutral position.

6.2. Starting the Equipment

- Be certain that there is liquid in the mixing and pump tanks before starting
- Be sure that there is fluid in the hydraulic and fuel tanks prior to starting.
- Start engine by turning the ignition key and hold down the bypass button for 10 seconds after engine starts or oil pressure builds up.
- The machine is now ready to operate.

Clean Machine Prior to Shut Down

6.3. Shut Down

- Stop the engine by rotating the key counter clockwise to the off position.
- Remove the ignition key.

13 OPERATION

1. Start the Engine and allow time for the unit to warm up.

2. With all the clean out doors and drain plugs in place, fill the tanks with enough water to lubricate the rotor and stator for the pump.

3. Set water level control, and then fill the water tank.

4. Transfer the water to the mixer tank. (refer to picture on page 12 Controls section)

5. Add cement to the mix, while adding bags have the mix circulating through the mixer tank. (Be certain to add water to mixer before adding bags of cement)

6. Use the handle to transfer the mix to the grout holding tank. (refer to picture on page 12 Controls section)

7. Repeat steps 3 thru 6 as needed.

8. The capacity of the grout holding tank is 198 gallons.

9. Take time to clean the machine, this should be done frequently (every few hours) depending on the mix being produced. Run three to four batches of water through the batching and pumping cycle to make sure the equipment is clean. (no grout colored water)

7 TRANSPORT

14 Safety Guidelines for Transport

- Secure movable and loose parts of the equipment.
- The driver of the transporting vehicle is responsible for checking each time before he starts to move, that the equipment is restrained from movement and properly secured to the vehicle.
- The transport company should be informed of the transport dimensions and weight.

7.2 Transport Data

Overall Dimensions:

Length:	100”
Width:	87”
Height:	94”

Weight: 6000 pounds

15MAINTENANCE

15.1 Safety Guidelines for Maintenance

- Have maintenance carried out by only skilled personnel.
- Replace with genuine parts from Atlantic Drill.
- Carry out the maintenance at the given intervals.
- Also observe the other manufacturers' service instructions for components installed on the equipment.

15.2 Maintenance Intervals

The maintenance for this equipment is organized into the following intervals:

- Daily
    - Check that seals are not leaking.
    - Check all oil levels.
    - Wash down and remove all grout spillage.
- Weekly
    - Check for wear on hoses.
    - Check all mounting bolts are tight.
- 200 hours of operation
    - Change hydraulic filter
    - Service the engine
        - Change oil
        - Change oil filter
        - Change air filter
        - Change fuel filter

This equipment is used under extremely wet and dusty conditions it may be necessary to service more often.

8.3 Hydraulic System

8.3.1 Hose Assemblies

8.3.2 Inspection

- Hose assemblies must be inspected at least once a month by a competent person. A hose assembly on which one or several of the following criteria are found must be replaced with a new one:
    - Damage in the outer layer down to the core of the hose (e.g. abrasions, cuts or fissures).
    - The outer layer of the hose is brittle (cracks).
    - The hose does not resemble its original natural shape (e.g. layers separating, bubbles forming).
    - Leaks
    - Damage or deformation of hose end fittings (tightness impaired); minor damage to the surface does not require replacement.
    - Corrosion on the end fitting, impairing the function and stability.

8.3.2 Hydraulic Cylinders

- Every 10 operating hours or daily, and every time before starting up again after a long period of rest, clean all cylinders and check them for tightness.

<u>Risk of damaging the piston rod!</u>
Do not clean cylinder piston rods with a pressure washer, sharp tool, caustic lye or an abrasive.
<u>Serious accident hazard!</u>
Immediately repair or replace cylinders that are found to be damaged.

- Every 50 operating hours or once a week grease the cylinder lugs.

On cylinders that are kept extended during rest:

- When not in use coat the rod with a heavy oil or grease periodically.
- Before a longer standstill, preserve piston rods with acid free grease.

8.3.2 Checking and Changing Hydraulic Oil

The place to check the hydraulic tank for proper level of oil is the sight glass shown in picture below.

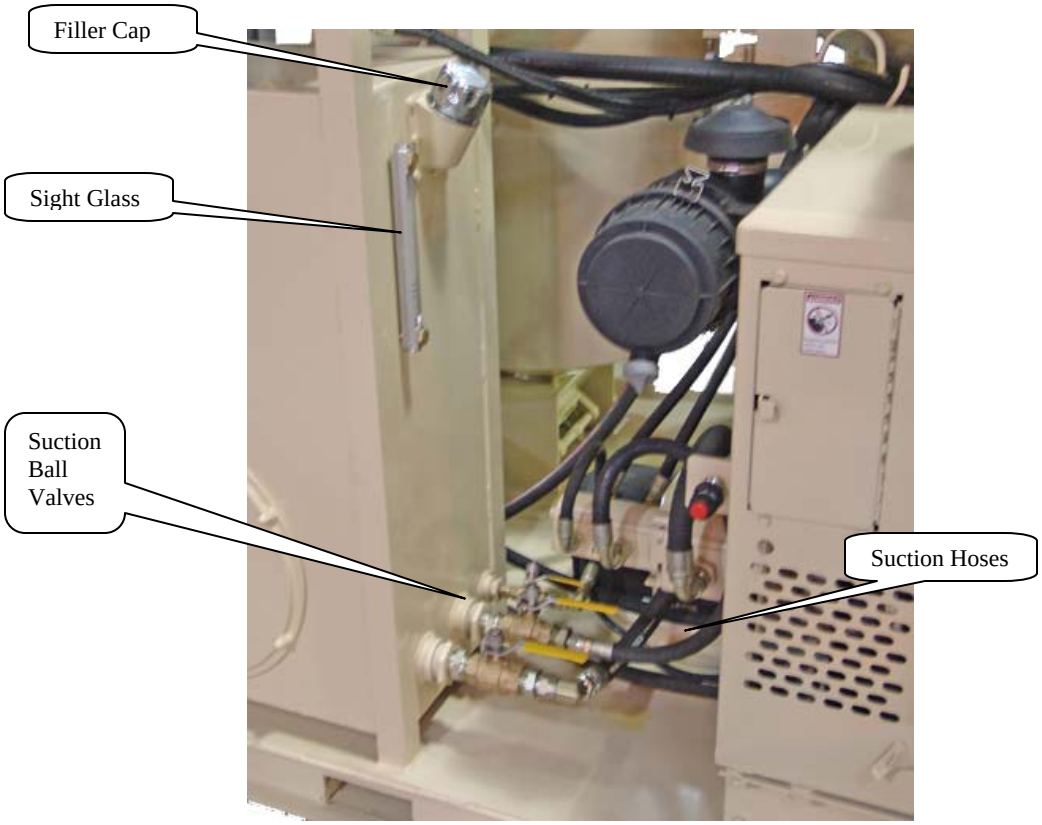

The hydraulic oil temperature must not exceed 150 deg F.

Changing Hydraulic Oil

The hydraulic oil must be changed every 2000 hours of operation.

First, drain the tank as follows:

- Remove filler cap.
- Close all suction ball valves.
- Remove hose from one of the ball valves.
- Attach discharge hose to the ball valve and drain all oil into a proper container.
- Close ball valve and attach suction hose.
- Open all ball valves.

Inspect the tank inside, clean as necessary and completely remove any water before refilling with new hydraulic oil.

Then refill the tank with hydraulic oil through the filler breather as follows:

Hydraulic oil must be filled through the filler breather only.

- Clean areas including hands, filler cap, filling cans et cetera. Prior to refilling the oil.
- Refill with oil to proper level using Clarity biodegradable hydraulic oil of proper weight ISO46 or ISO68.

In between the regular oil changes it is recommended to also sample the oil itself. This should be done every 1000 hours of operation. This is done to view deterioration of the oil, and potential damages can be avoided. Take a sample of the oil and have a chemical analysis done.

16 Filter Replacement

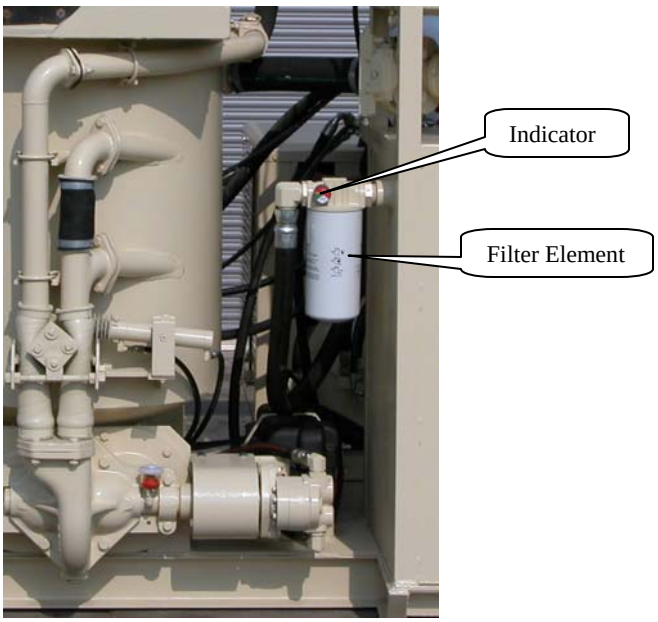

Replace the hydraulic oil filter shown above after 250 hours of operation or upon the indicator showing change (RED).

9 Cleaning the COLSHEAR AD1010H

- Drain full water tank into the mixer. Let it clean for several minutes than transfer water to grout holding tank. Do this until the water is clear in color.

- Drain another full batch of water into the mixer make sure equipment is OFF, and then with a brush, clean the insides of the mixer tank.

- Transfer the water into the grout holding tank and then pump out the water. With the brush clean the grout holding tank.

- Hose and brush off the remaining area of the AD1010H that has grout spillage on it.

17 Typical Mixes

Ratio of Cement to Sand	Average Water to Cement Ratio	Per 100 pounds of Cement	
		Water Contents: Gallons	Average Volume
1:0	0.42	5.2-6	9.8
1:1	0.47	6-6.6	15.3
1:1.25	0.51	6.6-7.1	17.1
1:1.5	0.56	7.1-7.9	19.2
1:1.75	0.62	7.9-8.4	20.8
1:2	0.66	8.1-9.2	22.7
1:3	0.85	10-12.4	30.3
1:4	1.12	13.2-16.3	38.8

Maximum Batch volume of the AD1010H Mixer is 74 Gallons

11. HYDRAULIC SCHEMATIC

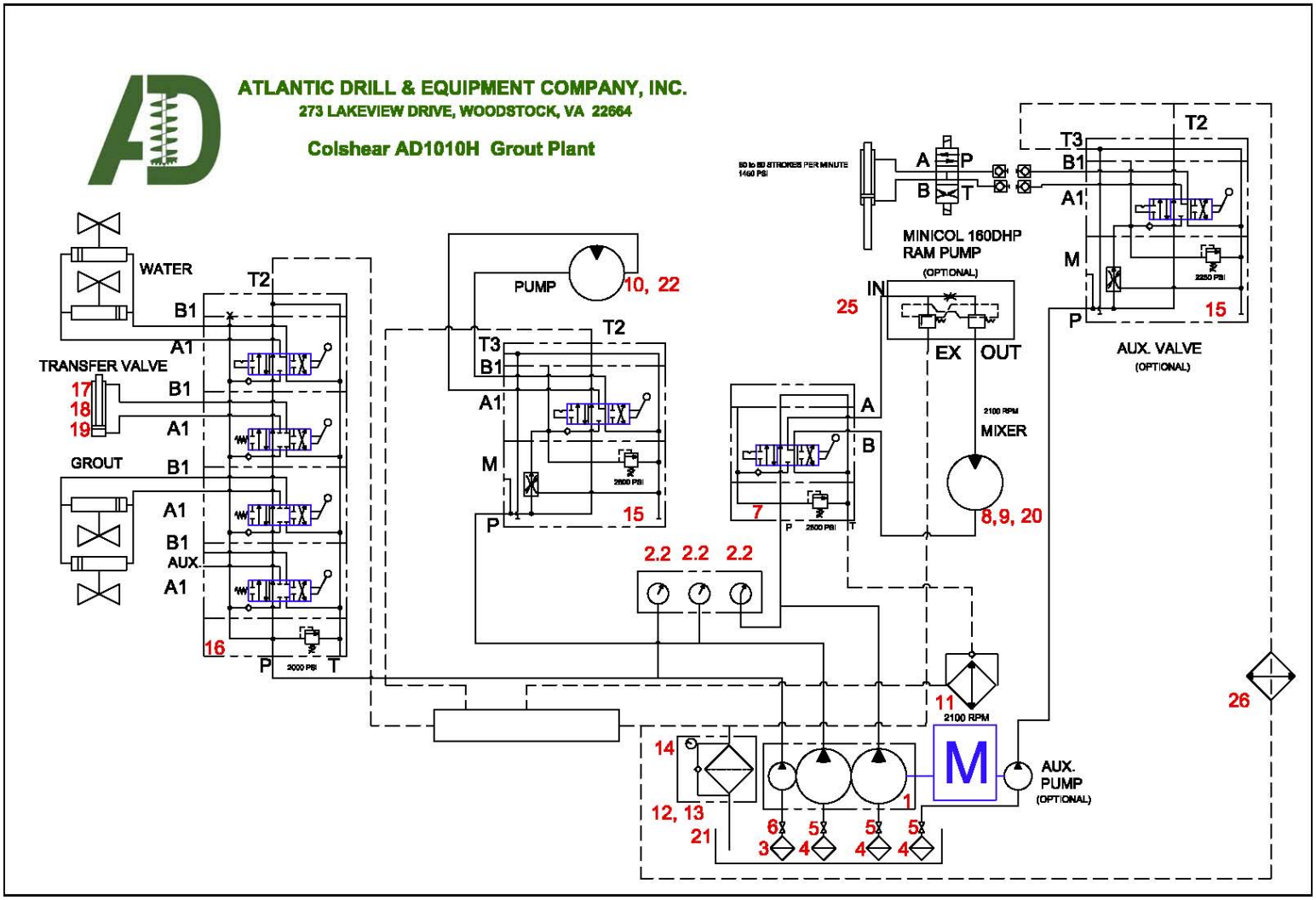

12. Hydraulic List

ITEM	PART NO.	DESCRIPTION	QTY
1	W2198187W	TRIPLE GEAR PUMP	1
2	HB2190202	PUMP-RETURN MANIFOLD	1
2.2	HB2190204	PRESSURE GAUGES	3
3	HB2190206	SUCTION STRAINER 5 GPM (1” CPL)	1
4	HB2190207	SUCTION STRAINER 25 GPM (2”)	3
5	HB2190208	SUCTION BALL VALVE 1 ¼”	3
5.1	HB2190209	LOCKING KIT FOR ABOVE	3
6	HB2190210	SUCTION BALL VALVE ½”	1
6,1	HB2190211	LOCKING KIT FOR ABOVE	1
7	HB2190212	MIXER VALVE	1
7.1	HB2190213	HANDLE KIT	1
8	HB2190214	MIXER MOTOR	1
9	HB2190215	MOUNTING BRACKET MOTOR	1
10	HB2190216	PUMP MOTOR (120 FT/LB START TORQUE)	1
11	HB2190217	COOLER	1
12	HB2190218	FILTER HEAD (-24 SAE) PORTS	1
13	HB2190219	FILTER ELEMENT	1
14	HB2190220	VISUAL INDICATOR	1
15	HB2190221	PUMP MOTOR VALVE (FLOW CONTROL)	1
15.1	HB2190213	HANDLE KIT	1
16	HB2190223	AUX VALVE STACK (4 SECTIONS)	1
16.1	HB2190224	HANDLE KIT	4

ITEM	PART NO.	DESCRIPTION	QTY
17	HB2190225	CYLINDER WELDED	1
		1 ½” BORE, ADJ TRUNNION	
		½” ROD MALE THREADS, ¼” PORTS	
		4” STROKE, RATED FOR 1,000 PSI	
18	HB2190226	SPHERICAL ROD EYE ½ PIN HOLE	1
19	HB2190227	CYLINDER ROD BOOT	1
20	HB2190228	COUPLING	1
21	HB2190229	RESERVOIR	0
21.1	HB2190230	RESERVOIR COVER	1
21.2	HB2190231	SIGHT GAUGE	1
21.3	HB2190232	FILLER BREATHER	1
22	HB2190233	LOAD ADAPTER	1
23	HB2190234	ADAPTER	1
24	HB2190235	ADAPTER	1
25	W2193000	FLOW CONTROL	1
26		HYDRAULIC OIL COOLER	1

13. Lubrication Points

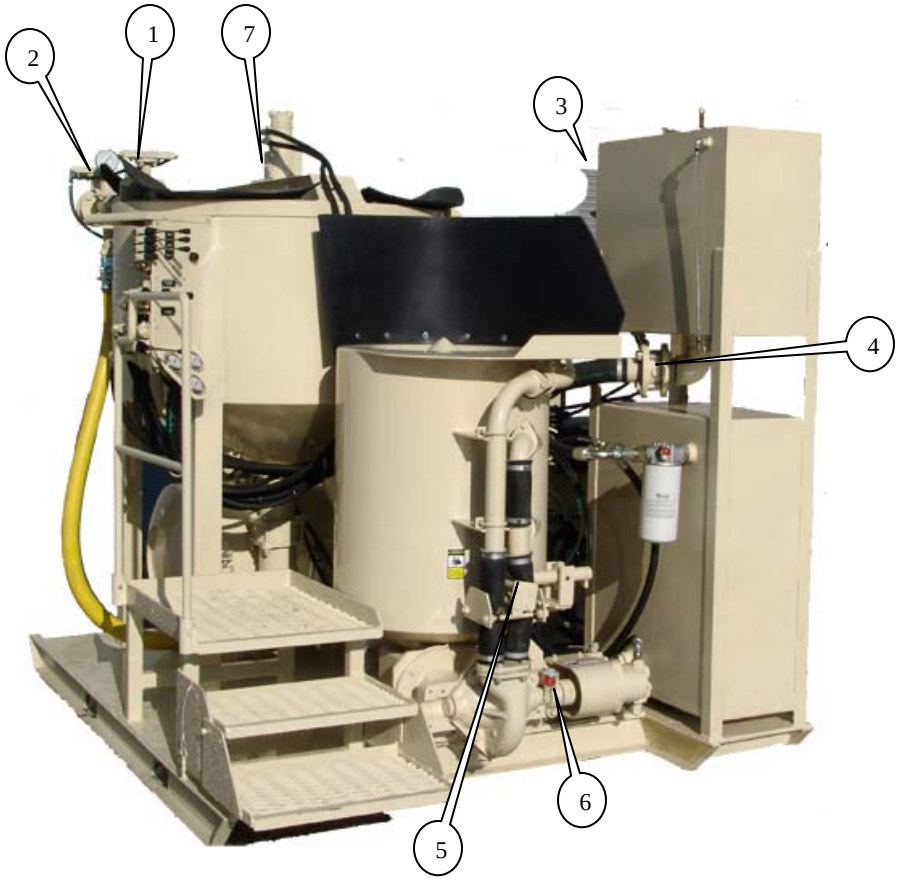

NOTE

ITEM NUMBER 6 IS BEING USED AS AN ACCUMULATOR TO KEEP A POSITIVE PRESSURE IN THE OIL CAVITY. IT SHOULD HAVE 90 WT GEAR OIL IN IT AT ALL TIMES. DO NOT USE GREASE AND DO NOT OVER FILL. CHECK AND MAINTAIN PERIODICALY DURING USE.

Lubricant	Pos. no.	Procedure
Grease	1 - 4	INJECT WITH HIGH QUALITY MULTIPURPOSE GREASE
Grease	5	INJECT WITH HIGH QUALITY MULTIPURPOSE GREASE
90 wt Gear Oil	6	USING A STANDARD GREASE GUN WITH AN EMPTY TUBE IN IT. FILL THE TUBE WITH 90 WT GEAR OIL. INJECT THE OIL USING THE STANDARD GREASE ZIRK ON THE LUBRICATOR
Open Gear Lub.	7	INJECT WITH HIGH QUALITY MULTIPURPOSE GREASE

Permeation Grout Monitor

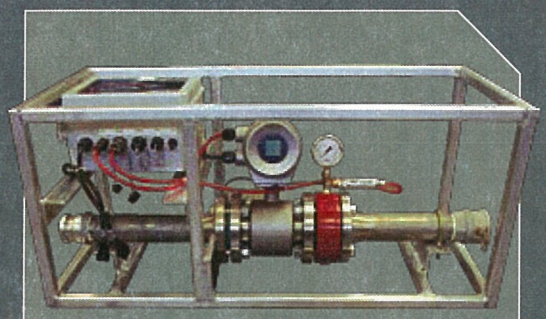

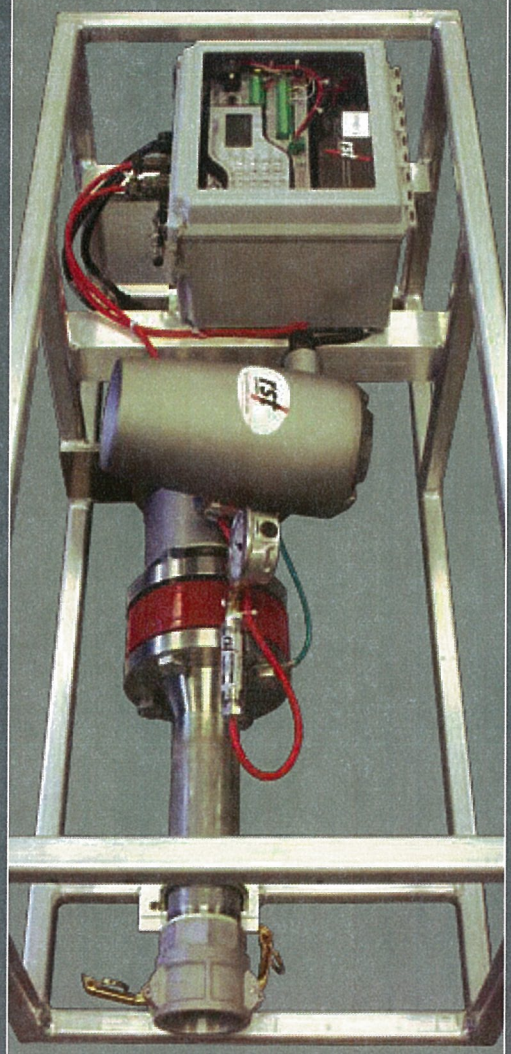

The RST Permeation Grout Monitor System provides operators and engineers near-real-time display of key grouting parameters to enhance the understanding of site conditions.

It is invaluable in providing a permanent record of key grouting parameters for quality assurance, documented quantities and pressure readings.

The datalogger incorporates a radio that transmits data to a portable computer on which an operator can visualize displays of real-time and historical injection pressure and flows. The user-friendly software allows for displaying the trending graphs of pressure and flow, as well as other graphs associated with grouting theories and practices.

flow specifications

PIPE SIZES (INCHES)	MINIMUM VOLUMETRIC RANGE (GAL/MIN)	MAXIMUM VOLUMETRIC RANGE (GAL/MIN)
0.5"	0.281	28.00
1.0"	0.782	78.00
1.5"	2.00	200.0
2.0"	3.122	310.0

ITEM	DESCRIPTION
Temperature	-20°C to 85°C (-4°F to 185°F)
Dissolved/suspended Solids	0 - 40%
Accuracy	±1% above 1 FPS (after on-site calibration)
Pressure Transducer	0 - 1000 PSI 0.25% FSO (other options available)

logger specifications

ITEM	DESCRIPTION
Storage	1 million readings standard (optional up to 2 GB)
Data File	Comma delimited ASCII data file for post processing in Excel® or other 3rd party software

ordering info

ITEM	PART #
0.5" Permeation Grout Monitoring System	ELGL7005
1.0" Permeation Grout Monitoring System	ELGL7000
1.5" Permeation Grout Monitoring System	ELGL7001
2.0" Permeation Grout Monitoring System	ELGL7002

Excel® is a registered trademark of Microsoft Corporation in the United States and/or other countries.
RST Instruments Ltd. reserves the right to change specifications without notice.

RST Instruments Ltd.
200 - 2050 Hartley Ave.
Coquitlam, BC
Canada V3K 6W5

Telephone: 604 540 1100
Facsimile: 604 540 1005
Toll Free: 1 800 665 5599

info@rstinstruments.com
www.rstinstruments.com

applications

Provides the operator with a display of key grouting parameters to enhance near-real-time understanding of the grouting process.

Provide a permanent record of key grouting parameters for quality assurance; documented quantities, accessible in standard software such as Microsoft® Excel.

features

Non-invasive.

Electromagnetic flowmeter.

Low maintenance diaphragm seal for analog and digital pressure gauge protection.

display features

Digital flow and analog pressure on monitor.

Near-real-time computer display.

Customizable display and recording options.

Battery operated and rechargeable.

system features

No cable - spread spectrum 900 MHz wireless to computer base station.

Unattended automatic monitoring if desired.