TA16

ENTERED

300 UNION BOULEVARD, SUITE 600, LAKEWOOD, CO 80228

TECHLAW INC.

PHONE: (303) 763-7188
FAX: (303) 763-4896

July 12, 2002

Mr. Carl Will
State of New Mexico Environment Department
Hazardous Waste Bureau
2905 Rodeo Park Drive East
Building One
Santa Fe, New Mexico 87505-6303

Reference: Work Assignment No. Y515, 06082.350; State of New Mexico Environment Department, Santa Fe, New Mexico; General Permit Support Contract; Research and Permitting Support for the Los Alamos National Laboratory, Draft Closure Plan for LANL TA-16 Burn Ground Unit; Task 14 Deliverable.

Dear Mr. Will:

Enclosed please find the deliverable for the above-referenced work assignment. The deliverable consists of a draft Closure Plan for the Los Alamos National Laboratory (LANL) Technical Area 16 (TA-16) Permit. This draft Closure Plan addresses the Burn Ground Unit.

As noted in previous deliverables, the TA-16 Permit Application had numerous technical deficiencies. These deficiencies have been submitted to LANL in the form of Notice of Deficiencies (NODs) (NMED, December 21, 2001). It is anticipated that once responses from LANL concerning these technical issues have been received, this draft Closure Plan will require revision. Placeholders for much of this missing information have been input into the draft Closure Plan. Please note that this Closure Plan is tracking behind the TA-54 and TA-55 Closure Plans because it was received at a later date.

The document is formatted in Word. Initially we were going to provide you with a revised redline/strike-out version of the draft Closure Plan, as originally submitted by LANL. However, as the content of the closure plan has changed dramatically, we decided that a redline/strike-out version would not be conducive for easy review. Therefore, the deliverable is formatted as a new, standalone document.

32430

The draft deliverable was emailed to you on Friday, July 12, 2002 at Carl_Will@nmenv.state.nm.us. In addition, at your request, this draft was emailed to Ms. Lee Winn and Mr. Steve Jetter. If you have any questions, please call me at (303) 763-7188.

Sincerely,

June K Dreith

June K. Dreith
Program Manager
Enclosure

cc: Mr. James Bearzi, NMED
Mr. David Cobrain, NMED
Mr. John Kieling, NMED
Ms. Paige Walton, TechLaw
Mr. B. Jordan, TechLaw Central Files
Denver Files

TASK 14 DELIVERABLE

DRAFT CLOSURE PLAN FOR LANL TA-16 BURN GROUND UNIT

NMED-HSW General Permit Support Contract

Submitted by:

TechLaw, Inc.
300 Union Boulevard, Suite 600
Lakewood, CO 80228

Submitted to:

Mr. Carl Will
State of New Mexico Environment Department
Hazardous Waste Bureau
2905 Rodeo Park Drive East
Building One
Santa Fe, New Mexico 87505

In response to:

Work Assignment No. Y513, 06082.350

July 12, 2002

ATTACHMENT F

DRAFT CLOSURE PLAN FOR LANL TA-16 BURN GROUND UNIT

TABLE OF CONTENTS

F.1 INTRODUCTION F-1
F.1.1 Applicability F-1
F.1.2 Units Description F-1

F.2 SUMMARY OF REQUIREMNTS F-12
F.2.1 Closure Performance Standard F-13
F.2.2 Burn Ground Unit Specific Standards F-13
F.2.3 Closure Schedule F-13
F.2.4 Sampling and Analytical Procedures F-15
F.2.4.1 Closure Sampling and Analysis Plans F-15
F.2.4.2 Sampling Methods F-15
F.2.4.2.1 Surface Sampling F-16
F.2.4.2.2 Soil and Sediment Sampling F-16
F.2.4.3 Liquid Sampling F-16
F.2.4.4 Sampling Handling and Documentation F-16
F.2.4.5 Analytical Procedures F-16
F.2.4.6 Field and Laboratory QA/QC F-16
F.2.5 Closure Report F-17
F.2.6 Survey Plat and Post-Closure Requirements F-18
F.2.7 Closure Certification F-18
F.2.8 Amendment of the Closure Plan F-18
F.2.9 Security F-19
F.2.10 Inspection F-19

F.3 UNIT SPECIFIC CLOSURE PROCEDURES F-19
F.3.1 Partial and Final Closure F-19
F.3.1.1 Unit-Specific Closure Schedules F-19
F.3.2 Description of Waste/Estimate of Maximum Waste Capacity F-20
F.3.2.1 Waste Treated at TA-16 OB Units F-21
F.3.3 Removal of Waste F-25
F.3.4 Decontamination F-25
F.3.4.1 Decontamination of Burn Ground Unit Structures F-27
F.3.4.2 Decontamination of Soils Surrounding Units Being Closed F-27
F.3.4.3 Decontamination of Equipment F-27
F.3.5 Decontamination Verification F-28
F.3.6 Cleanup Levels F-29
F.3.6.1 Surfaces F-29
F.3.6.1.1 Washdown Water F-29
F.3.6.1.2 Surface Swipes F-30
F.3.6.2 Soils F-30

F.4 REFERENCES F-30

LIST OF TABLES ii
LIST OF FIGURES iii
LIST OF ABBREVIATIONS/ACRONYMS iv

LIST OF ABBREVIATIONS/ACRONYMS

bgs	below ground surface
BV	background value
CMI	Corrective Measure Implementation
CMP	corregated metal pipe
CMS	Corrective Measure Study
COCs	constituents of concern
COLIWASA	Composite Liquid Waste Sampler
COPCs	constituents of potential concern
CSA	container storage area
CST-9	LANL Inorganic Trace Analysis Group
D&D	decontamination and decommissioning
DOE	U.S. Department of Energy
DOT	U.S. Department of Transportation
EPA	U.S. Environmental Protection Agency
ER	Environmental Restoration
ESH-1	LANL's Health Physics Operations Group
ESH-5	LANL's Industrial Hygiene and Safety Group
FV	fallout value
HE	high explosive
HPT	high performing team
LANL	Los Alamos National Laboratory
MDA	material disposal area
MSDSs	Material Safety Data Sheets
NFA	no further action

F.1 INTRODUCTION

The information provided in this Closure Plan is submitted to address the applicable closure requirements specified in the New Mexico Administrative Code, Title 20, Chapter 4, Part 1 (20 NMAC 4.1), Subpart IX, 270.14(b)(13), and 20 NMAC 4.1, Subpart V, Part 264, Subparts G, and X, revised June 14, 2000 [6-14-00]. This Closure Plan describes the activities necessary to close the hazardous waste open burning (OB) at Los Alamos National Laboratory (LANL) Technical Area (TA) 16. General closure information applicable to all hazardous and mixed waste management units at LANL and specific sampling and analytical procedures to be used during closure activities are presented in Attachment F of the LANL General Part B Permit Application, Revision 1.0 (LANL, 1998a), hereinafter referred to as the LANL General Part B. The general closure information referenced includes closure performance standards; amendment of the Closure Plan; closure cost estimate, financial assurance, and liability requirements; closure certification and report; and survey plat and post-closure requirements.

F.1.1 Applicability

This Closure Plan is prepared in accordance with the requirements of 20 NMAC 4.1, Subpart V. The Burn Ground Unit structures will be closed to meet the performance standards in 20 NMAC 4.1, Subpart V.

Following completion of final waste emplacement in each Burn Ground Unit structure, the unit will be closed. The U.S. Department of Energy (DOE) will notify the New Mexico Environment Department (NMED) of the closure of each unit. For the purpose of this Closure Plan, partial closure is defined as the closing of an individual Burn Ground Unit structure at TA-16. Final closure is defined as closure of all Burn Ground Unit structures at TA-16.

In the event the Permittees fail to obtain an extension of the hazardous waste permit in accordance with 20 NMAC 4.1, Part IX, §270.10(h), the Permittees will modify this Closure Plan to accommodate a contingency closure. Under contingency closure, the burn ground units will undergo removal or decontamination of all hazardous wastes and hazardous waste residues in accordance with 20 NMAC 4.1, Part V, §264.178. Waste handling equipment, burn unit structures, and associated systems will be inspected for hazardous waste residues and decontaminated as necessary. A copy of this Closure Plan will be maintained at TA-16 and at the LANL main office. The primary contact person is: _____.

F.1.2 Units Description

TA-16 Burn Ground Unit Structures Locations and Capacities

TA-16 is located in the southwestern quadrant of LANL at the west end of the Pajarito Plateau, near the foothills of the Jemez Mountains. The TA-16 Burn Ground Unit is comprised of several open burning

structures as illustrated in Figures F.1.2-1 and F.1.2-2. Table F.1.2-1 lists the type of waste treated and the maximum capacity during treatment for each of the units. A description of each of the five units (TA-16-388 Flash Pad, TA-16-388 Burn Tray, TA-16-399 Burn Tray, TA-16-401 Sand Filter, and TA-16-406 Sand Filter) follows.

Table F.1.2-1. Units at the Open Burn Grounds at Technical Area (TA) 16

Unit	Maximum Treatment Capacity	Waste Description
TA-16-388 Flash Pad	40,000 lbs/burn	HE Contaminated Solid Material
TA-16-388 Burn Tray	100 gallons per burn	HE Contaminated Oil/Solvents
TA-16-399 Burn Tray	1,000 lbs/burn	Bulk HE
TA-16-401 Sand Filter	1,000 lbs/burn	Bulk HE
TA-16-406 Sand Filter	1,000 lbs/burn	Bulk HE

TA-16-388 Flash Pad

The TA-16-388 Flash Pad consists of a 22-foot (ft) by 22-ft concrete pad/foundation set on a polypropylene-lined secondary containment area. Inset one foot from the edge of the concrete pad along the two sides and back is a 3-ft-high, 8-inch-thick impervious concrete wall. The foundation of the pad is slanted down toward the back concrete wall, thus providing secondary containment for any spills or run-on/runoff of stormwater. These are collected in the rear of the pad where they either evaporate or can be collected by one of the Burn Ground HE wastewater tank trucks. The entire flash pad can be covered with a movable steel roof when the flash pad is inactive. The configuration of the flash pad and burners is shown in Figure F.1.2-3. The maximum treatment capacity of the flash pad is estimated at 40,000 pounds per burn to accommodate the weights of large machine tools and other equipment. However, large burns are conducted only when absolutely necessary because it is more difficult to assure the HE is destroyed on all materials treated. Instead, burns of several hundred pounds are usually conducted.

The heat sources for the flash pad consist of three 5-ft-long forced-air propane burners with adjustable mounts. A burner is mounted outside the wall on each side and the back of the pad. One to three burners can be used, depending on the amount and configuration of the material to be flashed. The total capacity of the propane supply system is approximately 7 million British thermal units per hour (BTU/hr). Therefore, the output of each burner will be dependent on how many are used for a burn. Usually, they

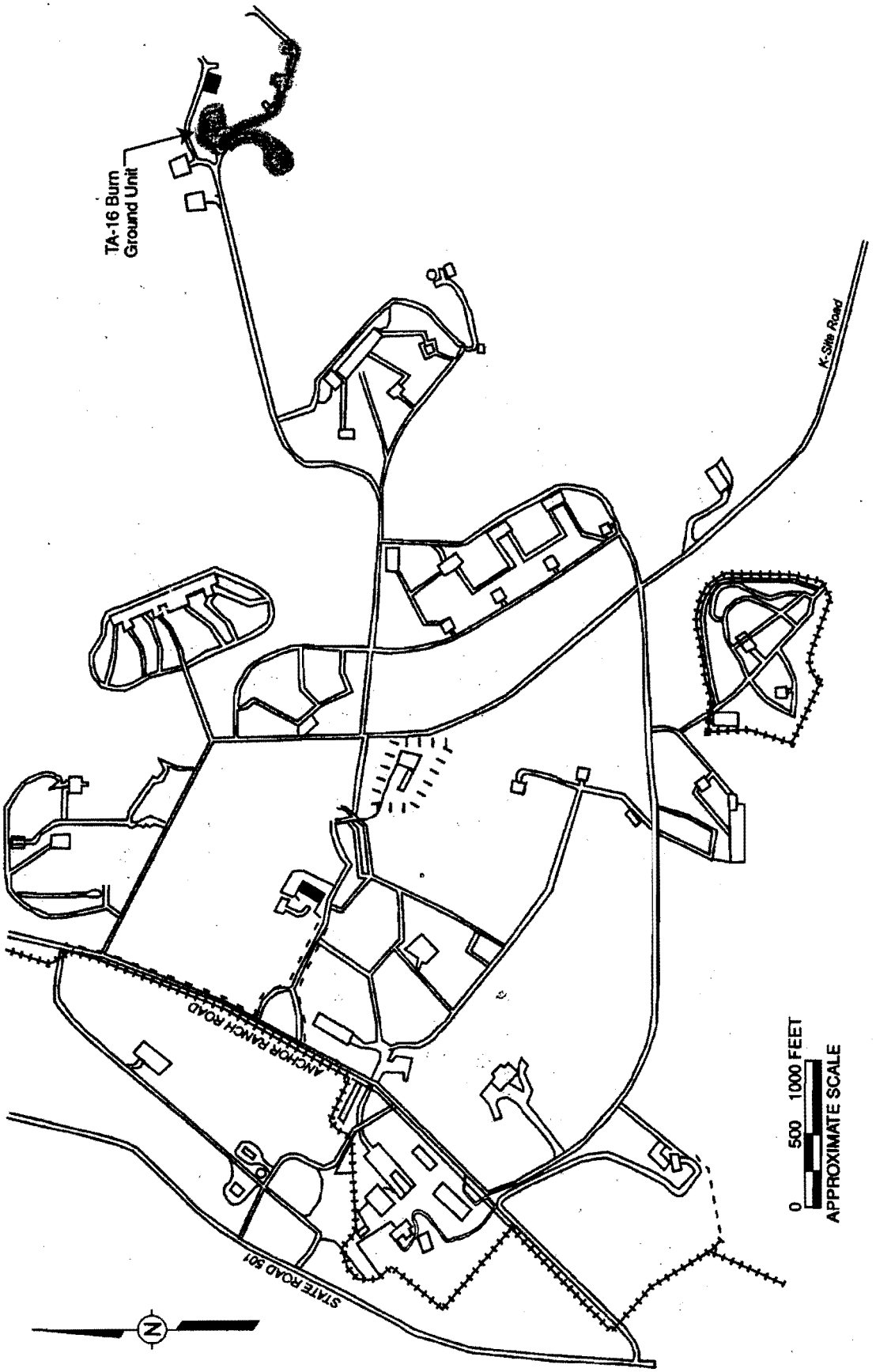

Figure F.1.2-1
Site Location Map for Technical Area (TA) 16 Burn Ground Unit

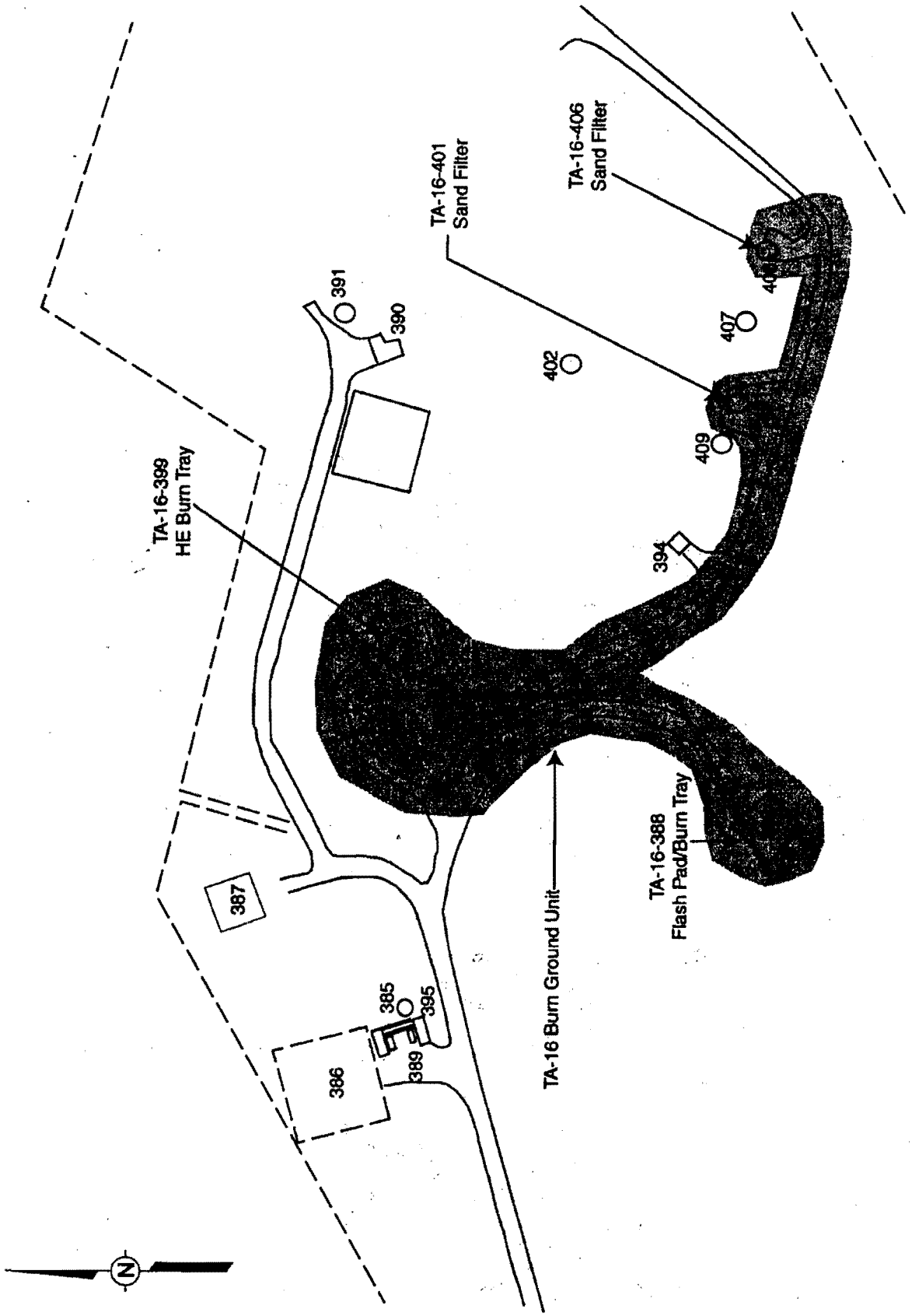

Figure F.1.2-2
Technical Area (TA) 16 Burn Ground Unit

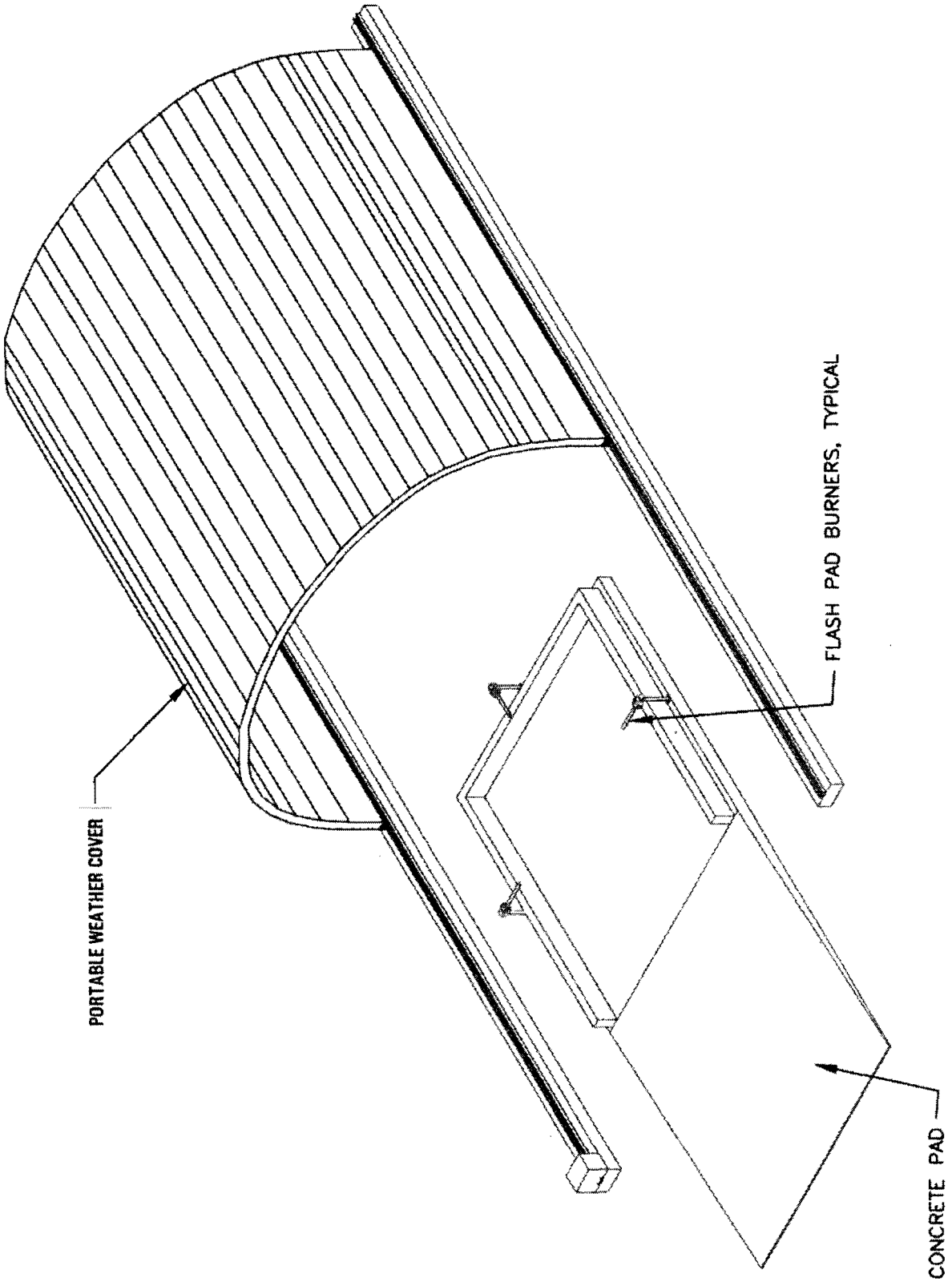

Figure F.1.2-3
Technical Area (TA) 16-388 Flash Pad

are operated at approximately 2 million BTU/hr. This provides adequate heat to bring the material being flashed to a temperature sufficient to destroy all HE contamination, typically to a temperature above 800 degrees Fahrenheit.

Movable steel equipment is used on the TA-16-388 Flash Pad to stage the many types of HE-contaminated waste to be treated at the pad. This equipment is constructed to be moved with a forklift and will be stored within the TA-16 Burn Ground Unit. One type of waste treated is large, metallic equipment that has been used for HE machining, handling, transportation, and storage. Several steel pallets are positioned in the middle of the flash pad and the equipment to be treated is set on the steel pallets. The pallets protect the integrity of the concrete pad, preventing deterioration caused by the heat and by mechanical impacts.

Much of the noncombustible waste consists of smaller metal items that can be moved by hand. These items are treated in a steel tray, which is lined on the bottom with sand and on the sides with firebrick. The smaller metallic items are positioned in this tray for treatment. After cooling, the items can be reoriented for additional treatment.

Steel trays are also used in treating combustible solids. Cardboard HE storage containers, cloth and paper used to clean HE, packing material for HE, wooden HE packing crates, and rags used to adsorb oil from around HE-processing machines are some of the common combustible materials that must be treated. These materials are stacked on the steel tray and covered with steel screen. The burners are used to thoroughly ignite the material and are then turned off. After about 24 hours, the material is inspected for thorough combustion and burned again, if necessary.

A steel tray, combined with a smaller steel tray, is used to destroy HE contamination in small batches of water-solvent solutions, acids, bases, or oils. These wastes are received in small polyethylene jars packed in a secondary container. These liquids are placed in the smaller tray and the propane-fired burners are used to ignite combustible gases and heat HE to the temperatures necessary for its destruction.

Soil contaminated with explosives, residues from the TA-16-399 HE Burn Tray and the TA-16-401 and 406 Sand Filters that require further treatment, small batches of HE-contaminated activated carbon, and similar contaminated noncombustible particulate matter are also treated at the flash pad. These waste

types are placed in a tray that is set on an open frame and covered with a steel plate. This assembly is set in the middle of another tray.

TA-16-388 Burn Tray

The TA-16-388 Burn Tray (Figure F.1.2-4) is a stainless-steel kettle with a 75-gallon capacity. The kettle is 30 inches in diameter, is 24 inches high, and stands on legs. Beneath the kettle is a propane ring burner with a heat output of approximately 200,000 BTU/hr. The burner has a steel windshield wrapped around it. Mounted on stands beside the kettle are two flare burners with a heat output of approximately 50,000 BTU/hr each. These burners ignite combustible gases boiled off by the ring burner. The whole assembly sits in a steel secondary containment tank, which is 8 ft in diameter and 1 ft high. The center of the assembly sits 10 ft back from the front of a 20-ft-wide, 40-ft-long concrete pad. Also on the pad is a retractable cover that can be rolled over the burn tray assembly to protect it and the contents from the weather.

The wastes treated at the TA-16-388 Burn Tray range from HE-contaminated solvents, solvent/water mixtures, acids, and bases resulting from HE analysis, processing, maintenance, and cleanup activities. The liquids are either poured into the kettle from 5-gallon carboys or hand-pumped from 55-gallon or other drums. After the liquid contents are evaporated, the residue in the kettle is heated to decomposition temperatures for explosives, as determined by thermocouples attached to the kettle and registered in the Control Building. Although the maximum treatment capacity of the burn tray is listed in the LANL General Part A as 100 gallons and the kettle capacity is 75 gallons, usually only about 5 to 30 gallons of liquid waste is treated in any batch. This quantity represents the amount that can be effectively treated in a single day.

TA-16-399 HE Burn Tray

The TA-16-399 HE Burn Tray is a 4-ft-wide, 16-ft-long steel tray, supported on 1.5-ft-high legs, and lined with firebricks (Figure F.1.2-5). The treatment capacity of the TA-16-399 HE Burn Tray is 1,000 pounds of waste per burn. Explosives to be burned, usually rejects from pressing and machining operations and also HE pieces that are no longer useful, are transported to the HE burn tray packed in cardboard and wooden boxes. The boxes are set before the tray one at a time, paper padding is placed on the tray, and the explosives are removed from the boxes and set on the padding. When the surface is covered with HE pieces, usually several hundred pounds, the empty boxes are placed back on the transport vehicle. The padding is then dampened with kerosene, electric matches (squibs) are connected to the firing cables, and a train of excelsior saturated with kerosene is run from the squibs to the padding.

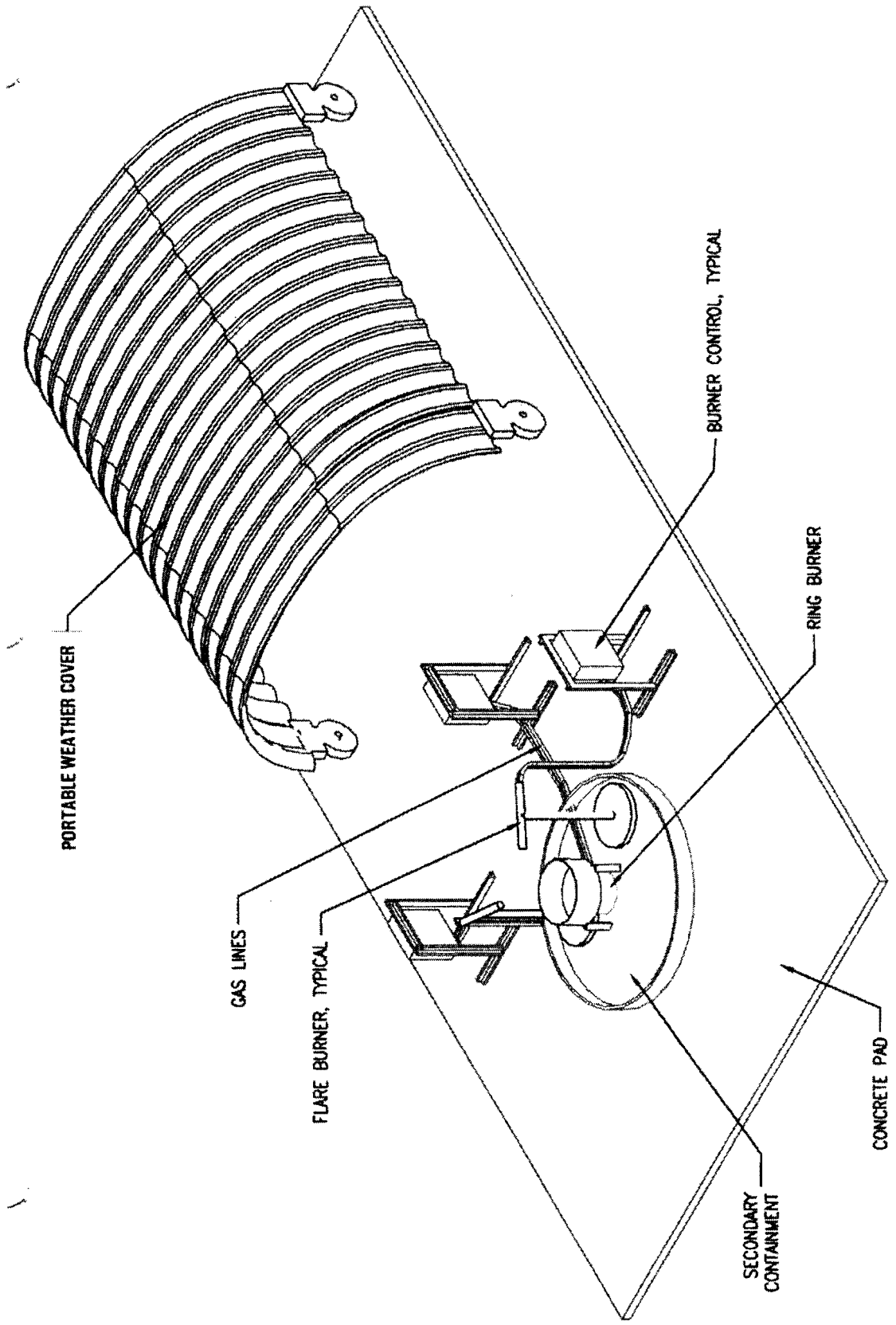

Figure F.1.2-4
Technical Area (TA) 16-388 Burn Tray

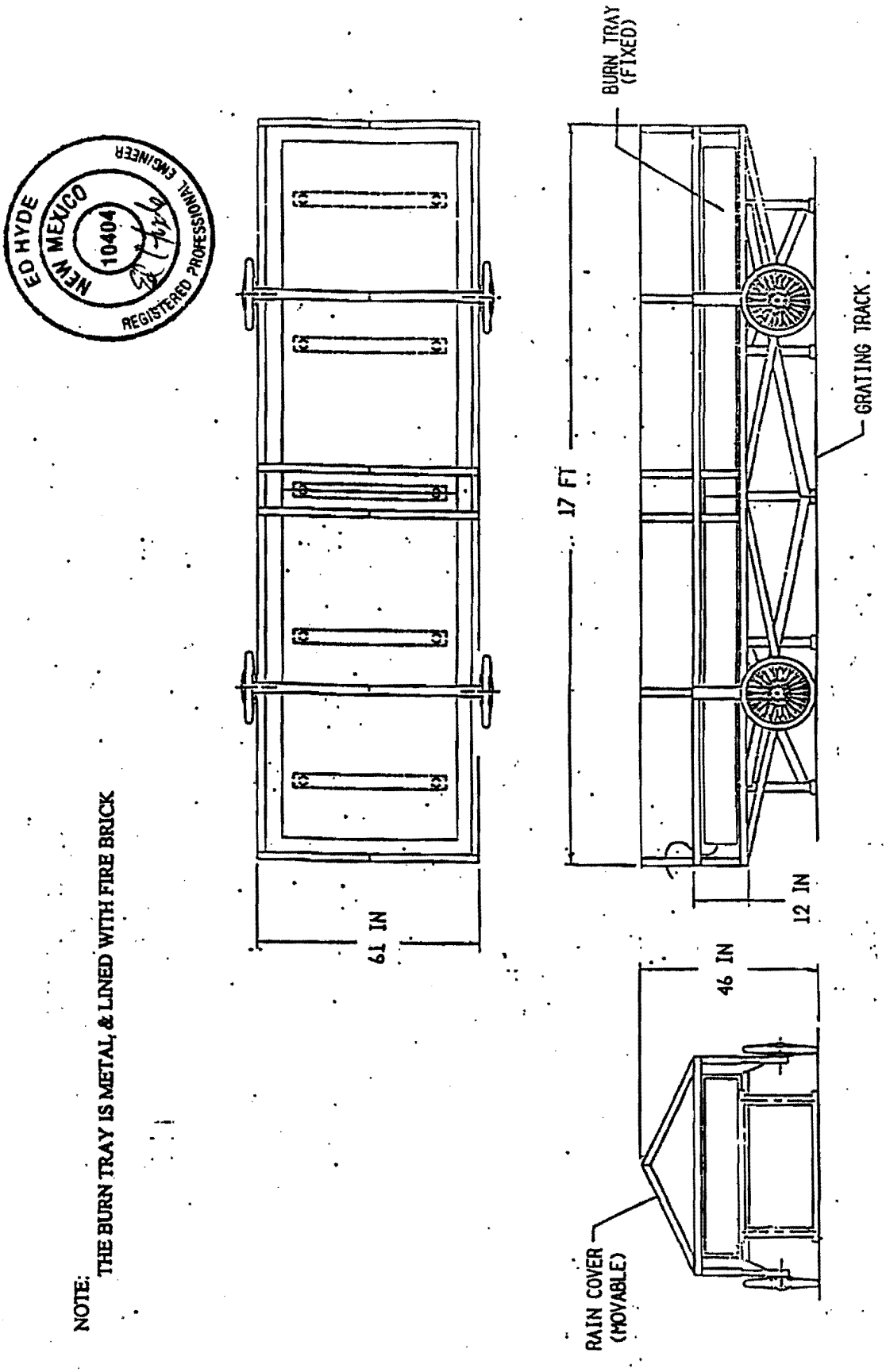

Figure F.1.2-5
Technical Area (TA) 16-399 HE Burn Tray

The day after the HE burn, the ash is inspected for unburned HE or other residues that do not appear to be fully treated. The cover of the TA-16-399 HE Burn Tray is placed over the residue until it can either be treated again on the burn tray or on the TA-16-388 Flash Pad. The existing rolling cover may soon be replaced with a portable cover.

TA-16-401 AND TA-16-406 Sand Filter

The TA-16-401 and TA-16-406 Sand Filters are contained in steel tanks that are 8 ft, 9 inches in diameter and about 4 ft high, about half of which is below ground level (Figure F.1.2-6). The base of each has a shallow funnel-shape that is connected to underground pipes leading to the HE Wastewater Treatment Facility's sump tank. The sand filters consist of a gradation of large, smooth river rocks at the bottom to coarse and fine sand on the top. The sand filters perform two vital functions in water treatment. The first is to remove inert and explosive solids that are settled from or are suspended in wastewater. The second is to partially "digest" organic materials in the wastewater using microbes that live among the sand and rock particles. The flow rate through the sand filters is usually only several gallons per minute and it generally takes a day to unload a full truck tank.

Wastes treated at the sand filters include wastewater in which HE, and possibly trace chemicals associated with HE synthesis and degradation, are in solution and particulate HE saturated with water. Currently, each type of waste is treated in a different filter, the first in the TA-16-406 Sand Filter and the second in TA-16-401 Sand Filter. However, this practice can vary over time and either sand filter can be used for wastewater and/or bulk and particulate HE. The maximum treatment capacity of each sand filter is 1,000 pounds of HE per burn.

The wastewater to be treated comes from holding tanks (sumps) of HE-processing facilities and various types of tanks from environmental restoration and decontamination operations of HE-contaminated solid waste management units. Usually, the wastewater is pumped from the holding tanks into tank trucks operated by Burn Ground personnel, and poured into the TA-16-406 Sand Filter at a rate of several gallons per minute. However, there may be some instances where wastewater is placed in a holding tank near the sand filter and then pumped or gravity fed directly into the filter. Filter socks are tied to the outlet hoses to capture coarse particulate HE. If the water is oily, several pounds of activated charcoal may be added to the filter socks to adsorb oils. Once the filter sock is filled with inert and explosive particles, it is drained and placed on the TA-16-401 Sand Filter. When the top of the TA-16-406 Sand

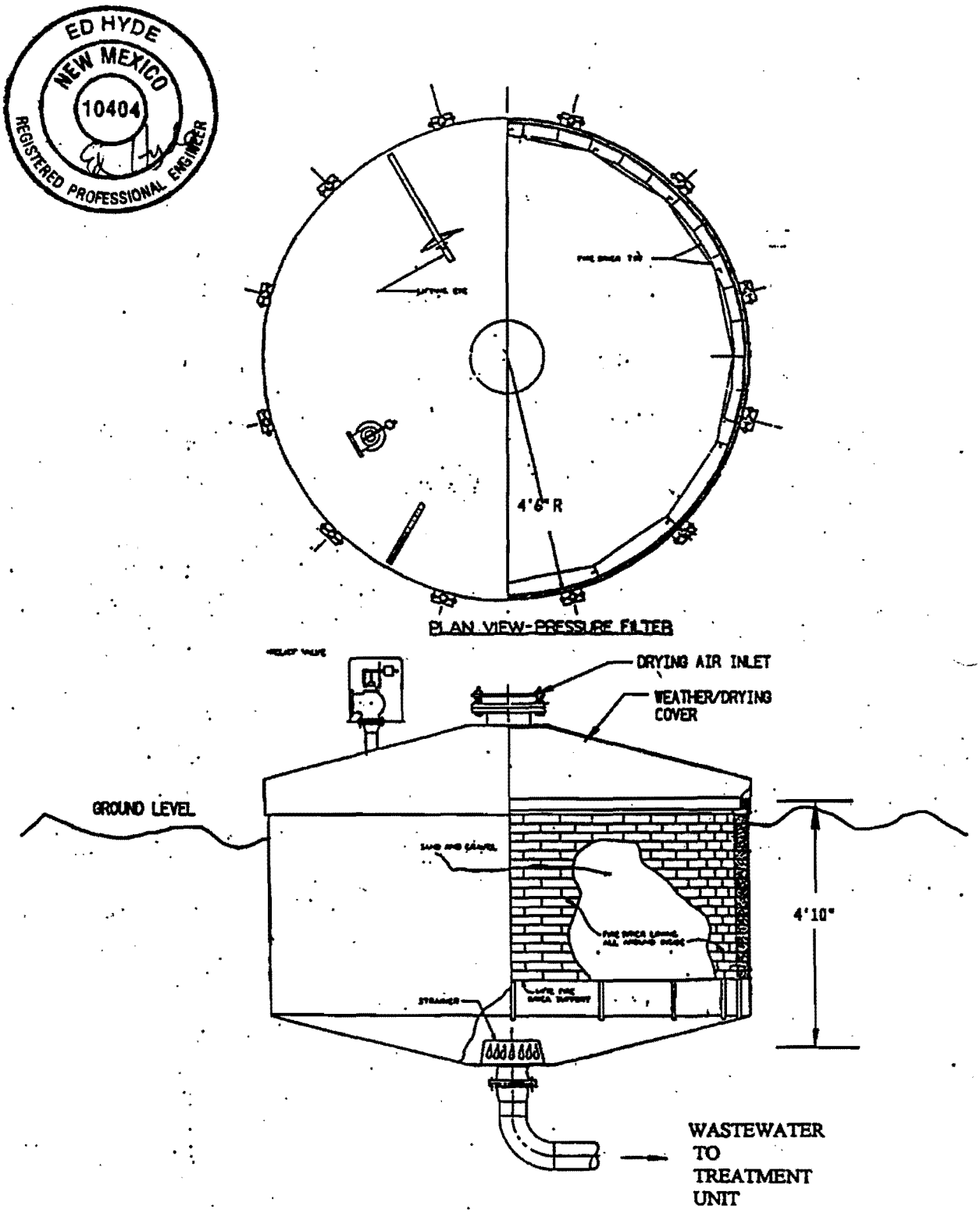

Figure F.1.2-6
Technical Area (TA) 16-401 and TA-16-406 Sand Filters

Filter becomes clogged with fine particles, this fine top layer of sediment is removed and placed in the TA-16-401 Sand Filter. Clean sand is then placed on the surface of the TA-16-406 Sand Filter.

Water-saturated explosives are placed in the TA-16-401 Sand Filter. These water-saturated HE wastes come from several sources. The first source is the HE-production facilities or environmental restoration activities where HE-containing wastewater is pre-filtered. When the pre-filters are full, the contents or the entire filter are placed into plastic buckets. After a sufficient number of buckets have been accumulated at less-than-90-day storage areas or satellite accumulation areas, or the accumulation limit for the buckets is about to expire, the buckets are moved from the storage or accumulation sites to the TA-16-401 Sand Filter, where their contents are spread out on the sand filter surface. Similarly handled is the HE that is collected during environmental restoration or building decontamination/decommissioning activities. It is placed into buckets with water and stored in accumulation areas until treated by OB. Another source of wet HE is the HE sludge at the bottom of the various holding tanks, or sumps. After the wastewater is removed for treatment, the sludge remaining in the sumps is periodically vacuumed into tank trucks and poured into the TA-16-401 Sand Filter. Because the operations and capacities of the sand filters are similar to those of the TA-16-399 HE Burn Tray, the sand filters can be used to treat bulk HE if the TA-16-399 HE Burn Tray is not operational. There may be other sources of HE generated in the future that will be treated at the sand filters.

After the HE has been placed in a sand filter, a heavy steel lid is then placed over the filter to restrict access to the wastes and shield them from initiating sources. When a sufficient amount of HE wastes have been accumulated in the TA-16-401 Sand Filter, the steel lid is tightly sealed to the sand filter tank using screw clamps. The contents of the sand filter are then dried with heated forced air for 4 or 5 days. The dried contents are then damped with kerosene and ignited remotely using the same procedure as used at the TA-16-399 HE Burn Tray. The TA-16-401 Sand Filter is used principally for burning because it is not as close to trees as the TA-16-406 Sand Filter and the area around the TA-16-401 Sand Filter is easily kept mowed. During seasonal dry periods, a wide area around the TA-16-401 Sand Filter is wet down prior to treatment.

F.2 SUMMARY OF REQUIREMENTS

This section is prepared in accordance with the requirements of 20 NMAC 4.1, Subpart IX, 270.14(b)(13), and 20 NMAC 4.1, Subpart V, Part 264, Subpart G [6-14-00], as applicable.

F.2.1 Closure Performance Standard [20 NMAC 4.1, Subpart V, 264.111]

Performance standards to be met by all hazardous waste management units at the Facility are presented in Attachment F of the LANL General Part B Permit Application, Revision 1.0. In summary, the general performance standards require the Facility to minimize the need for further maintenance; control, minimize, or eliminate the post-closure escape of hazardous substances to environmental media; and comply with the applicable closure and post-closure requirements of 20 NMAC 4.1, Subpart V, Subparts G, I, N, and X [6-14-00].

F.2.2 Burn Ground Unit Specific Standards

Within 90 days after receiving the final volume of hazardous waste at a OB unit LANL shall remove all hazardous waste from the unit.

Within 180 days after receiving the final volume of hazardous waste at a OB unit LANL shall remove or decontaminate all hazardous waste, hazardous waste residues, and hazardous constituents from the unit, including the floors, walls, and other unit surfaces; the containment system; equipment; structures; and all remaining containers, liners, bases, and soil containing or contaminated with hazardous waste, hazardous waste residues, or hazardous constituents.

Hazardous waste, hazardous waste residues, and hazardous constituents will be removed or decontaminated to meet the cleanup levels specified in Section F.3.6 below.

Hazardous waste, hazardous waste residues, and hazardous constituents will be removed or decontaminated, and removal or decontamination will be verified, in accordance with procedures and sampling methods specified in Sections F.3.3, F.3.4 and F.3.5 of this Closure Plan and the Closure Sampling and Analysis Plan (SAP).

Closure of any unit will be deemed complete when decontamination has been verified; all equipment and structures associated with operation of the unit have been decontaminated, if necessary; and closure certification has been submitted to and approved by the NMED.

F.2.3 Closure Schedule [20 NMAC 4.1, Subpart V, 264.112(b)(6), 264.112(e), and 264.113]

LANL will provide written notification to NMED at least 60 days prior to receipt of the final volume of hazardous waste at Burn Ground Unit structure.

LANL will remove all hazardous waste from a Burn Ground Unit structure within 90 days after receiving the final volume of hazardous waste at the unit.

LANL will remove or decontaminate all hazardous waste, hazardous waste residues, and hazardous constituents from a Burn Ground Unit structure within 180 days after receiving the final volume of hazardous waste at the unit.

Within 90 days after the effective date of this Permit Chapter, LANL shall remove all hazardous waste that is not intended to be left in place after closure of the unit, shall remove or decontaminate all contaminated equipment or structures at the unit, and shall control all known releases of hazardous waste, hazardous waste residues, and hazardous constituents that can be controlled by measures that can be immediately implemented, to comply with 20.4.1.500 NMAC (incorporating 40 CFR §264.111(b)).

LANL will complete investigations of releases from the unit in compliance with schedules specified in Section XII, Compliance Schedule Tables, of the New Mexico Hazardous Waste Act §§ 74-4-10.1 and 74-4-13 Order, issued by NMED to LANL effective _____.

LANL will remove or decontaminate all releases of hazardous waste, hazardous waste residues, and hazardous constituents from the unit to soil, groundwater, surface water, and air, identified in the release assessment conducted under the above paragraph, to comply with 20.4.1.500 NMAC (incorporating 40 CFR §§264.111, 264.112(b)(4) and (5), and 264.310(b)(4)), in compliance with schedules for removal or decontamination of releases specified in this closure plan. Removal or decontamination of releases from the unit shall be completed in compliance with the schedule specified in Section XII, Compliance Schedule Tables, of the New Mexico Hazardous Waste Act §§74-4-10.1 and 74-4-13 Order, issued by NMED to LANL effective _____.

LANL will submit to the Secretary of the NMED, via certified mail, a certification that the unit has been closed in accordance with the specifications of this Closure Plan and the General Closure Plan for LANL, approved by NMED, within 60 days after completion of closure activities for a hazardous waste management unit.

For closure activities to exceed 90 days for treatment or removal of wastes or 180 days for completion of closure activities, the Secretary must approve a permit modification. Should an extension be needed, and in compliance with 20.4.1.500 NMAC (incorporating 40 CFR §264.113(a) and (b)), LANL will submit a revised schedule that justifies the need to extend the closure period. During the extended closure period, LANL will comply with all other aspects of 40 CFR §264.113 by demonstrating that the unit(s) being closed has the capacity to receive additional wastes, demonstrating compliance with all applicable permit requirements, and taking all steps necessary to prevent threats to human health and the environment as a result of hazardous and/or mixed waste management at the site(s) during the extended closure period.

F.2.4 Sampling And Analytical Procedures [20 NMAC 4.1, Subpart V, 264.112(b)(4)]

The following sections describe procedures and methods for sampling, analysis, and documentation applicable to closure activities.

F.2.4.1 Closure Sampling and Analysis Plans

Sixty days prior to the final receipt of hazardous waste at a hazardous waste management unit, Permittees will submit to NMED, for NMED approval, a detailed sampling and analysis plan (SAP) (Closure SAP) describing decontamination procedures and sampling methods to verify removal and decontamination of hazardous waste and hazardous waste residues. Permittees shall include the following information, at a minimum, in the Closure SAP:

a. Unit history and description, identifying, at a minimum, the following:

   i. Constituents of concern (COCs), determined by all hazardous and constituents stored or treated at the unit, by category of constituent subject to the same sampling methodology;

   ii. Spills or other releases of hazardous or constituents during operation of the unit; and

   iii. Visible staining, cracks, sumps, and other unit-specific conditions indicating potential release locations;

b. Proposed decontamination procedures;

c. Proposed sample locations, including indoor surfaces, outdoor surfaces, for example asphalt or concrete pads, and soil;

d. Sample methods and procedures;

e. Analytes; and

f. Detection limits.

F.2.4.2 Sampling Methods

Permittees will conduct sampling in accordance with procedures given in Test Methods for Evaluating Solid Waste, Physical/Chemical Methods (*SW-846*) (U.S. Environmental Protection Agency (EPA), 1986) or other procedures or methods approved by NMED.

F.2.4.2.1 Surface Sampling

Permittees will demonstrate decontamination verification of surfaces of Burn Ground Unit structures by sampling washdown water as described in Section F.3.6.1.1 of this Closure Plan. Swipe sampling may be required in addition to or in lieu of washdown water sampling if NMED determines, based on unit-specific information contained in the Closure SAP submitted in compliance with Section F.2.2 above, that unit-specific conditions exist (e.g., past releases, visible staining of constituents detectable by swipe sampling) that indicate that swipe sampling alone or in combination with washdown water sampling will more accurately detect releases than washdown water sampling alone.

F.2.4.2.2 Soil and Sediment Sampling

When soil and/or sediment sampling is appropriate or required, the sampling procedures outlined below will be used to obtain samples to determine the amount (if any) of hazardous constituents in soil and/or sediment in the vicinity of the unit(s) undergoing closure.

F.2.4.3 Liquid Sampling

In order to determine baseline parameters, a composite liquid waste sampler (COLIWASA) or similar device will be used to sample unused washwater solutions before decontamination begins. It will also be used to sample the washwater used in cleaning structures and equipment. As an alternative to the COLIWASA, glass tubes will be used to sample liquids. The primary advantage in using a glass tube is that the tube will be disposed of appropriately after each sample is collected, thus eliminating the potential for cross contamination.

F.2.4.4 Sample Handling and Documentation

Protocol for sample handling and documentation will be specified in the Closure SAP

F.2.4.5 Analytical Procedures

Sample analyses, including those for quality assurance/quality control (QA/QC), will be conducted using methods prescribed in *SW-846* or other approved procedures or methods. Target detection limits, analytical methods, and instrumentation for metals and organics analyses are presented in Tables F-3 and F-4 of Attachment F to the General Part B Permit Application, Revision 1.0, respectively.

F.2.4.6 Field and Laboratory QA/QC

Field QC activities will include collection of the following QC samples: duplicate samples, trip blanks, field blanks, and equipment rinsate blanks. Field QC samples are summarized in Table F-5 of Attachment F, Closure Plan, of the LANL General Part B Permit Application, Revision 1.0. All field and laboratory QA/QC activities will be specified in the Closure SAP.

F.2.5 Closure Report

Within 60 days after completion of closure activities for a hazardous waste management unit, Permittees shall submit a Closure report to NMED. The report shall document the closure and shall contain, at a minimum, the following information:

a. The certification described in Section F.2.6 of Attachment F, Closure Plan, to the LANL General Part B Permit Application, Revision 1.0;
b. Any variance from the approved activities in the TA-specific Closure Plan and the reason for the variance;
c. A summary of all sampling results, showing:

    - Sample identification;
    - Sampling location;
    - Data reported;
    - Detection limit for each datum;
    - A measure of analytical precision (e.g., uncertainty, range, variance);
    - Identification of analytical procedure; and
    - Identification of analytical laboratory;

d. A QA/QC statement on analytical data validation and decontamination verification;

e. The location of the file of supporting documentation, including:

    - Field logbooks;
    - Laboratory sample analysis reports;
    - QA/QC documentation; and
    - Chain-of-custody forms;

f. Storage or disposal location of hazardous waste resulting from closure activities; and

g. A certification of accuracy of the report.

F.2.6 Survey Plat and Post Closure Requirements [20 NMAC 4.1, Subpart V, 264.116 and 264.117 through 264.120]

LANL intends to remove hazardous waste and associated hazardous constituents from the TA-16 Burn Ground Unit and to decontaminate structures and equipment contained in the unit or, if decontamination to

the cleanup levels approved in the closure plan cannot be achieved, to dispose of or other wise manage the contaminated structures and equipment (clean closure). If decontamination to these cleanup levels is not achievable, LANL may propose an alternate demonstration of decontamination, as circumstances indicate. If the TA-16 Burn Ground Unit cannot be clean closed, LANL will provide a written post-closure plan. Post-closure care requirements pursuant to 20 NMAC 4.1, Subpart V, 264.116 [6-14-00], will begin after final closure of the unit. These will include the preparation of a written post-closure care plan with provisions for amendments pursuant to 20 NMAC 4.1 Subpart V, 264.118 [6-14-00], and post-closure notices will be filed with appropriate authorities, as described in 20 NMAC 4.1, Subpart V, 264.119 [6-14-00]. To meet that requirement, the Permittees will file a "Land Use Restriction Notice" or equivalent document with the County of Los Alamos and other authorized agencies. Within 60 days after completion of the established post-closure care period for the unit, LANL will submit to the Secretary of the NMED, via certified mail, a certification of completion of post-closure care in accordance with the requirements of 20 NMAC 4.1, Subpart V, 264.120 [6-14-00].

F.2.7 Closure Certification [20 NMAC 4.1, Subpart V, 264.115]

Within 60 days after completion of closure activities for any hazardous or mixed waste management unit, LANL will submit to the Secretary of the NMED, via certified mail, a certification that the unit has been closed in accordance with the specifications of this Closure Plan. The certification will be attested to by an independent, New Mexico-registered professional engineer and will be signed by LANL in accordance with 20 NMAC 4.1, Subpart V, 264.115 [6-14-00]. Documentation supporting the independent, registered engineer's certification will be furnished to the Secretary of the NMED with the original certification. A copy of the certification and supporting documentation shall be maintained by both the DOE/Office of Los Alamos Site Operation (OLASO) and ESH-19.

F.2.8 Amendment of the Closure Plan [20 NMAC 4.1, Subpart V, 264.112(c)]

In accordance with 20 NMAC 4.1, Subpart IX, 264.112(c) [6-14-00], LANL will submit a written notification of or request for a permit modification to authorize a change in the approved Closure Plan, in accordance with the applicable procedures in 4.1.900 NMAC (incorporating 40 CFR §270.42) and 20.4.1.901, whenever:

a. There are changes in operating plans or facility design that affect the Closure Plan;

b. There is a change in the expected year of closure; and/or

c. Unexpected events occur during closure that require modification of the approved Closure Plan.

The written notification or request will include a copy of the amended Closure Plan for approval by the NMED.

LANL will submit a written request for a permit modification with a copy of the amended Closure Plan at least 60 days prior to the proposed change in unit design or operation or no later than 60 days after an occurrence of an unexpected event that affects the Closure Plan. If the unexpected event occurs during Closure, the permit modification will be requested within 30 days of the occurrence. If the Secretary of the NMED requests a modification of the Closure Plan, a plan modified in accordance with the request will be submitted within 60 days of notification or within 30 days of notification if a change in facility condition occurs during the Closure process.

F.2.9 Security

Because of the ongoing nature of waste management operations at the Facility, the sites of the hazardous waste management units will be under the permanent care of the DOE or another authorized federal agency. Fences and site security will be maintained for as long as necessary to prohibit public access.

F.2.10 Inspection

Inspections will include checking the structural integrity of all OB units, all containment/burn pads, all berms, and all sumps and trenches. Proper functioning of all equipment related to the treatment of waste at OB units will be confirmed. In accordance with the requirements of 20 NMAC 4.1, Subpart V, 264.15 and 264.602 [6-14-00], the TA-16 Burn Ground Unit structures will be inspected daily when in use (i.e., when wastes are managed at the structure) and weekly when not in use. Inspection parameters are specified in Appendix C of the LANL General Part B.

F.3 UNIT SPECIFIC CLOSURE PROCEDURES

F.3.1 Partial and Final Closure

Partial closure at the TA-16 Burn Ground Unit, which involves the closing of one or more of the OB structures within the unit while leaving the other OB structures within the unit in service, will not be allowed under this Closure Plan. The Burn Ground Unit must be completely cleaned closed as a whole unit entirely. Any partial closure at the TA-16 Burn Ground Unit will require an amendment to the closure plan as described in Section F.2.10.

F.3.1.1 Unit Specific Closure Schedules

Closure of the TA-16 Burn Ground Unit will be conducted in accordance with the schedules presented in Table F.3.1.1-1.

Table F.3.1.1-1 Schedule for Closure Activities at Technical Area 16, Burn Ground Unit

Activity	Maximum Time Required[a]
Let contract request for proposals	-90 Days
Notify the NMED	-45 Days
Receive proposals	-30 Days
Select contractor and award contract	-10 Days
Collect background samples (as appropriate)	-5 Days
Final receipt of waste	Day 0
Final treatment of waste	Day 5
Begin closure activities - removal of wastes	Day 10
Washdown of structure(s) and/or equipment	Day 20
Perform initial sampling of the structure(s) and/or equipment	Day 25
Perform sampling of soils surrounding the OB units	
Analyze samples	Day 55
Perform additional washdown (if necessary)	Day 60
Perform additional sampling (if necessary)	Day 70
Analyze samples (if necessary)	Day 100
Perform final cleanup (e.g., removal of decontaminated equipment and decontamination wastes)	Day 120
Remove contaminated soil (if necessary)	
Verify decontamination	Day 150
Submit final report to NMED	Day 180

[a] The schedule above indicates calendar days from the beginning by which activities will be completed. Some activities may be conducted simultaneously and/or may not require the maximum time listed. Extensions to this schedule may be requested, as needed.

F.3.2 Description of Waste/Estimate of Maximum Waste Capacity

The TA-16 Burn Ground Unit structures are used to treat a variety of high explosives (HE)-contaminated wastes, including but not limited to, scrap HE, HE-contaminated equipment and particulate matter, combustible solids, and HE-contaminated liquids. Information on the hazardous component of the wastes treated at the TA-16 Burn Ground Unit is provided in Appendix B of the LANL General Part B (LANL, 1998). The maximum amount of waste that may be treated at the TA-16-388 Flash Pad is 40,000 pounds

(lb) per burn. The maximum waste treatment capacity for the TA-16-388 and TA-16-399 Burn Trays is 100 gallons and 1,000 lb, respectively. The maximum waste treatment capacity for the TA-16-401 and TA-16-406 Sand Filters is 1,000 lb of HE per burn each. ***This is an NOD (Response to Notice of Deficiency; TA – 16 Part B Application Revision 3.0, January 31, 2000; page 2). The following is LANL's response.***

F.3.2.1 Waste Treated at TA-16 OB Units

Waste Quantities and Characteristics

The quantities of high explosives (HE) and HE-contaminated wastes treated at the Technical Area (TA) 16 Burn Ground vary from year to year, depending on changes in operations and on the types of research conducted. The information provided in this closure plan is based on the amounts treated since the open burn ground began operating in its current configuration. Note that the total estimated waste treated over the active life of the unit was based on the average amount of waste treated per burn, the average number of burns per year, and the number of years of unit operation until closure **(LANL must provide these estimates or the data to perform the calculation)**.

The characteristics of the wastes change for the same reasons that the quantities change. Table B-6 of the LANL General Part B Permit Application provides a list of all anticipated hazardous constituents. The table noted that many of the constituents would be present only in trace amounts or might not be present at all. In addition, the compositions of wastes treated in the future are anticipated to be similar, although not identical.

HE-Contaminated Solid Materials (TA-16-388): Table 3.2.1-1 summarizes the materials flashed at TA-16-388 **(Data is for 2000 only. LANL must provide data for other years since open burn ground began operating in current configuration)**. This waste stream is very heterogeneous, and quantities and compositions vary from year to year. Some wastes, such as rags used to wipe down oil from HE-machining equipment and cardboard contaminated with HE, are treated every year. Others (such as HE-contaminated soil with polyvinyl chloride [PVC] primer from a spill) occurred and were treated in 2000, but would not typically appear every year.

Table F.3.2.1-1. Maximum Waste Inventories and Types of HE-Contaminated Solid Materials Treated at the TA-16-388 Flash Pad

Waste Type	Total Estimated Waste Over Active Life of Unit (lbs)	Maximum Treatment Inventory (lbs)	Wastes (lbs)	Wastes to be Disposed
Fiber and Wooden HE Boxes and Packing			50	
Cardboard HE Boxes and Packing			250	
HE-Contaminated Rags			260	
HE-Contaminated Soil			150	
HE-Contaminated Rags, Wipes, and Gloves			35	
HE-Contaminated Scrap Metal and Shot Debris			355	
HE-Contaminated Rags, Paper, and Plastic			150	
HE-Contaminated Trash from S-Site			50	
PBX Contaminated Burlap Bags and Scrap Metal			50	
Scrap Metal and Fire Brick			1000	

HE-Contaminated Oils/Solvents Treated at TA-16-388: Table 3.2.1-2 provides a summary of the hazardous non-HE constituents in oil/solvent waste treated in the TA-16-388 Burn Tray. The oils/solvents are classified according to their waste profile forms (WPF) **(These data were extracted from the Oil/Solvent Characterization portion of Appendix D of LANL's Response to Notice of Deficiency; TA-16 Part B Application Revision 3.0, January 31, 2000 submitted to NMED in February 2002. The waste profile forms should be incorporated into the waste characterization section of the facility's permit application and a reference to their location inserted here)**. These WPFs represent current documentation of the waste streams and are subject to replacement if generator knowledge changes **(Data is for 2000 only. LANL must provide data for other years since open burn ground began operating in current configuration)**.

Table F.3.2.1-2. Maximum Waste Inventories and Types of HE-Contaminated Oils/Solvents Treated in the TA-16-388 Burn Tray

Waste Type by WPF Number	Total Estimated Weight Over Active Life of Unit (lbs)	Maximum Treatment Inventory	Waste (gal/lbs)	Waste to be Disposed
20661		100 gal per burn	1/12	
22776		100 gal per burn	15/125	
24158		100 gal per burn	5/42	
25278		100 gal per burn	15/125	
29515		100 gal per burn	1/8	
30280		100 gal per burn	15/125	
30508		100 gal per burn	15/125	
30824		100 gal per burn	6/50	
31709		100 gal per burn	0.5/4	
31722		100 gal per burn	10/83	
31845		100 gal per burn	1/8	
31846		100 gal per burn	2.5/21	
32117		100 gal per burn	10 ml /0.02 lbs	
32124		100 gal per burn	25/208	

Bulk HE (TA-16-399, -401, and –406): Table 3.2.1-3 describes the most common types of bulk HE that may be treated at TA-16-399, -401, and -406. HE waste streams generated by research and development operations will vary **(LANL must provide data for other years since open burn ground began operating in current configuration. The data should be broken by unit as well. When the data become available, Table 3.2.1-3 can be revised.)**.

Table F.3.2.1-3. Maximum Waste Inventories and Types of Bulk HE Treated in the TA-16-399 Burn Tray, TA-16-401 Sand Filter and TA-16-406 Sand Filter

Explosive	Total Estimated Weight Over Active Life of Unit (lbs)	Maximum Treatment Inventory	Waste (gal/lbs)	Waste to be Disposed
ANFO		1,000 lbs per burn		
Baratol		1,000 lbs per burn		
Boracitol		1,000 lbs per burn		
DAAF		1,000 lbs per burn		
HMX15		1,000 lbs per burn		
LX02		1,000 lbs per burn		
LX07		1,000 lbs per burn		
Nitrocellulose		1,000 lbs per burn		
Nitroglycerine		1,000 lbs per burn		
NTO		1,000 lbs per burn		
PBX 9404		1,000 lbs per burn		
PBX 9407		1,000 lbs per burn		
PBX 9501		1,000 lbs per burn		
PBX 9502		1,000 lbs per burn		
PETN		1,000 lbs per burn		
RDX		1,000 lbs per burn		
TATB		1,000 lbs per burn		
Tetryl		1,000 lbs per burn		
TNT		1,000 lbs per burn		
XTX 8003		1,000 lbs per burn		
XTX 8004		1,000 lbs per burn		

HE-Contaminated Oils/Solvents Treated at TA-16-388: Table 5 in Appendix B of this response provides a summary of the hazardous non-HE constituents in oil/solvent waste treated at TA-16-388 in 2000. The waste profile forms (WPF) from which these data were extracted are presented in the Oil/Solvent Characterization portion of Appendix D of this response. These WPFs represent current documentation of the waste streams and are subject to replacement if generator knowledge changes.

Bulk HE (TA-16-399, -401, and –406): Table 7 in Appendix B of this response describes the most common types of bulk HE that may be treated at TA-16-399, -401, and -406. The compounds listed in Table 7 represent the HE that was treated in 2000. HE waste streams generated by research and development operations will vary. LANL will treat waste streams that have a detonation rate greater than 0.33 kilometers per second at sea level and bulk military propellants that can not be otherwise treated safely, as required by the New Mexico Administrative Code, Title 20, Chapter 4, Part 1 (20.4.1 NMAC) § 265.382. The main source of halogens in materials treated at the TA-16 Burn Ground are binders used in explosives. The compositions of binders for explosives are shown in Table 8 of Appendix B in this response. Table 9 in Appendix B of this response summarizes the total halogens in explosives burned in 2000.

F.3.3 Removal of Waste

All hazardous waste and hazardous waste residues (including but not limited to ash) will be removed from the thermal treatment process area(s) or equipment at closure [20.4.1.700 NMAC (incorporating 40 CFR § 265.381)]. ***This is an NOD issue (Response to Notice of Deficiency; TA –16 Part B Application Revision 3.0, January 31, 2000; page 6). The following is LANL's response.***

Each OB structure site will be clean closed by removal of all hazardous waste and hazardous waste residues. Meeting the closure performance standards will be accomplished by removal of waste from the TA-16 Burn Ground Unit and decontamination of the areas that may have come into contact with wastes. Decontamination activities will ensure the removal of hazardous waste residues from the TA-16 Burn Ground Unit to the cleanup levels specified in Section F.3.6 of this closure plan.

Hazardous waste and associated hazardous constituents from the TA-16 Burn Ground Unit (or portion thereof) will be removed and structures and equipment contained in the unit will be decontaminated or, if decontamination to the cleanup levels specified in Section F.3.6 of the closure plan cannot be achieved, LANL will dispose of or otherwise manage the contaminated structures and equipment (clean closure). If the TA-16 Burn Ground Unit (or portion thereof) cannot be clean closed, LANL will provide a written post-closure plan as described in Section F.2.6 of this closure plan.

F.3.4 Decontamination

To the extent possible, contaminated OB structures associated with the TA-16 Burn Ground Unit will be decontaminated, if necessary. Structures and equipment that cannot be decontaminated will be managed in compliance with appropriate regulations. Closure activities may include the removal, treatment,

segregation, and/or disposition of structures and associated equipment that are scheduled to be closed. After removal and segregation, management of the structures and equipment will include treatment by OB at TA-16 and/or characterization by analytical samples prior to recycling or disposal. The final assessment and remediation of the OB area undergoing closure will be integrated and coordinated as Resource Conservation and Recovery Act (RCRA) corrective actions.

Before proceeding with closure activities, the OB structure to be closed will receive a thorough visual inspection for unburned materials. Personal protective equipment (PPE) and monitoring requirements will be determined by LANL's Industrial Hygiene and HE personnel following the initial field inspection. The level of PPE that will be required will depend upon the levels of chemical contamination that are detected, if any. If the surveys do not indicate detectable contamination levels, minimum PPE requirements will consist of coveralls, steel-toed footwear, and safety glasses or face shields. If an overhead danger is present, a hard hat will be worn. Workers involved in closure activities will be required to have appropriate training and medical monitoring. Contaminated PPE will either be decontaminated or managed in compliance with appropriate regulations.

Before any decontamination activities begin, two samples of the clean water and detergent (washwater) solution (squeezed from mops and/or sponges prior to use) will be collected. The samples will be analyzed for the appropriate parameters listed in Table E-3 of Appendix E, the Contingency Plan, in the LANL General Part B (LANL, 1998a). The analytical results from these samples will be used to provide a baseline for decontamination verification.

Each Burn Ground Unit structure, including secondary containment concrete pads, will be inspected for any cracks or conditions that would potentially lead to loss of decontamination-liquid containment. If any defects, deterioration, damage, or hazards affecting containment are discovered during inspection, appropriate remedial actions (including repairs, maintenance, or replacement) will be completed before decontamination activities begin. If contamination is found on or in any defective, deteriorated, or damaged area, the contamination will be removed and its removal verified before repairs or replacement takes place.

After any decontamination washdown process, the used washwater will be collected, transferred to containers, sampled, and analyzed for the appropriate parameters in Table E-3 of Appendix E of the LANL General Part B (LANL, 1998a). If the used washwater is nonhazardous, it will be managed appropriately in accordance with LANL policy. Otherwise, the used washwater will be managed at an appropriate on-site facility, depending on the regulated constituents present.

F.3.4.1 Decontamination of Burn Ground Unit Structures

Prior to decontamination of Burn Ground Unit structures, any portable equipment to be removed from the area will be wiped down with washwater solution consisting of warm water, mild detergent and polyvinyl alcohol. This solution is intended to remove loose contamination from surfaces. At each unit being closed, all walls, tanks, pads, trays, and associated equipment that could potentially be contaminated will be wiped down with washwater solution. Portable berms will be used to collect and provide containment for the used washwater. Collected washwater will be sampled and analyzed as specified in the Closure SAP. If sampling and analysis indicate that hazardous constituents are present, the wash cycles and analyses will continue until the walls, floors, and/or equipment have been decontaminated or the decision is made to segregate contaminated materials for subsequent management as contaminated waste.

After all equipment and structural members have been decontaminated, any recessed areas present (e.g., sumps) will be wiped down with washwater. The used washwater will collect in the recessed area, where it will be sampled. After sampling, the used washwater will be removed from the recessed area and transferred to and stored in appropriate containers, pending analysis. Should the analysis show that the washwater is contaminated, the recessed areas will be decontaminated with a clean washwater solution and the washwater solution resampled. This will continue until the recessed area has been decontaminated or the decision is made to manage it as contaminated material.

Drain lines and sumps connected to sumps and recessed areas will be sampled and analyzed for chemical, as appropriate. If contamination is found, it will be removed and its removal verified by sampling and analysis. All sampling and analysis will be performed according to the methods specified in the Closure SAP.

F.3.4.2 Decontamination of Soils Surrounding Units Being Closed

In accordance with 20.4.1.500 NMAC (incorporating 40 C.F. R. 264.112(b)(4)), all surrounding soils will be sampled and tested for potential contamination. Soils will be sampled and analyzed as specified in the Closure SAP.

F.3.4.3 Decontamination Equipment

Prior to use, any reusable decontamination equipment will be rinsed with distilled water. Decontamination equipment rinsate blanks will be collected and analyzed in accordance with Environmental Restoration (ER) standard operating procedures (SOP). Reusable protective clothing, tools, and equipment used during closure activities will be scraped as necessary to remove any residue and cleaned with a washwater solution. Residue, disposable equipment, and reusable equipment that cannot be decontaminated will be containerized and managed appropriately at an approved on-site

facility, depending on the regulated constituents present. Used washwater will be collected and analyzed for the appropriate parameters listed in Table E-3 of Appendix E in the LANL General Part B (LANL, 1998). If the used washwater is nonhazardous, it will be managed appropriately in accordance with governing regulations. Otherwise, it will be transported to the TA-16 HE Wastewater Treatment Facility or other appropriate LANL or off-site facility, (_____ or _____) depending on the regulated components present.

F.3.5 Decontamination Verification

Sufficient sampling and analysis will be required to demonstrate that hazardous waste, hazardous waste residue and/or hazardous constituents are not present at the storage structure or location after closure. The number and location of samples and types of analytes required will be determined at the time of unit closure according to the Closure SAP.

Two samples of clean washwater solution (i.e., water, mild detergent cleanser, and polyvinyl alcohol) squeezed from mops and/or sponges prior to use will be collected before initial washdown of any storage structure. The samples taken from the open burn ground units will be analyzed for the appropriate parameters to provide baseline data for decontamination verification. Analytical procedures will conform to methods found in the most current version of *SW-846* (EPA, 1986) at the time of closure. The specific methods used for each type or group of constituents in each type of media found at the unit or location will be selected according to the Closure SAP. Used washwater solutions will be analyzed for the same parameters. Washwater solutions will be considered contaminated if the used washwater solution shows an increase (determined by the statistical method specified in *SW-846* as appropriate for the analytical method used) in the analytical parameters over the clean washwater solution. If subsequent wash downs are deemed necessary, an additional sample of clean washwater solution squeezed from mops and/or sponges prior to use will be taken for each additional wash down event.

Swipe samples may be taken and analyzed for hazardous waste residues to verify decontamination. Details such as the number of swipes taken, the percentage of surface sampled for each swiped item, and the method of analysis will be specified in the Closure SAP.

As required by 20.4.1.500 NMAC (incorporating 40 CFR §264.112(b)(4)), soils surrounding and under structures and locations that were impacted by stored wastes will be sampled to verify that contamination has been removed to the appropriate clean up level. In addition, soils surrounding decontaminated areas will be sampled to verify that cross-contamination resulting from decontamination procedures has not occurred. The sampling and analytical methods to be used will be specified in the Closure SAP.

Additional analyses will be performed as necessary, according to the Closure SAP.

Successful decontamination meets one of the following criteria:

- No detectable hazardous waste or hazardous constituents from container storage activities are found in the final sample.

- Analytical results of samples collected during closure activities identify no statistically significant concentrations of RCRA-regulated constituents above baseline data.

- Detectable hazardous waste or hazardous constituents from container storage activities in the final sample are removed to statistically significant levels based on baseline concentrations in the clean washwater.

- Detectable hazardous waste or hazardous constituents from container storage activities in the final sample are at or below levels agreed upon with NMED.

- Detectable hazardous waste or hazardous constituent concentrations from container storage activities do not significantly decrease after several washdowns. In such an event, hazardous constituents that pose an acceptable risk will be allowed to remain, as mutually agreed upon with NMED.

F.3.6 Cleanup Levels

Will need to insert the NMED specific cleanup levels that they are going to enforce. Will need to get this information from NMED.

F.3.6.1 Surfaces

F.3.6.1.1 Washdown Water

When LANL verifies decontamination by sampling washwater, NMED will approve the decontamination as complete when the washwater is non-detect for constituents of concern (COCs) identified in the Closure SAP submitted under Section F.2.2 above.

F.3.6.1.2 Surface Swipes

If NMED deems necessary to verify decontamination of surfaces, LANL may be requested by NMED to conduct swipe sampling. NMED will approve the decontamination as complete when the following cleanup levels are attained: ***insert cleanup levels.***

F.3.6.2 Soils

F. 4 REFERENCES

EPA, 1986 and all approved updates, "Test Methods for Evaluating Solid Waste, Physical/Chemical Methods," *EPA-SW-846*, Office of Solid Waste and Emergency Response, U.S. Government Printing Office, Washington, D.C.

LANL, 1998a, "Los Alamos National Laboratory General Part B Permit Application," Revision 1.0, Los Alamos National Laboratory, Los Alamos, New Mexico.

LANL, 1998b, "Los Alamos National Laboratory General Part A Permit Application," Revision 0.0, Los Alamos National Laboratory, Los Alamos, New Mexico.

LANL, 2000a, "Los Alamos National Laboratory Technical Area 16 Part B Permit Renewal Document," Revision 3.0, Los Alamos National Laboratory, Los Alamos, New Mexico.

LANL, 2000b, "Los Alamos National Laboratory Hazardous Waste Facility Permit, Chapter 5, Technical Area 16 Conditions", Draft, Los Alamos National Laboratory, Los Alamos, New Mexico.

LANL, 2002, "Response to Notice of Deficiency; TA-16 Part B Application Revision 3.0, January 31, 2000," Los Alamos National Laboratory, Los Alamos, New Mexico.