COPY

Delta H Engineering, Ltd.

ENGINEERING

1900 CHAMISA POST OFFICE BOX 2023 SANTA FE, NEW MEXICO 87504-2023 (505) 983-2594

June 30, 1987

Mr. Jim White
Regulatory Compliance, HSE-8
Los Alamos National Laboratory
P.O. Box 1663
Los Alamos, NM 87545

Re: TA-16 Outfall 055 Treatment, Revised Plan
Subcontract 9-XS5-V3017-1

Dear Mr. White:

Attached are two copies of the revised treatment system for TA-16 wastewater treatment at outfall 055. This revision is based upon the elimination of barium from the wastewater through process changes.

Although this report is by no means complete and does not provide detailed engineering for fabrication of the unit, it may be used directly by Delta H engineers and fabricators to construct a system if so desired. We estimate from 6 to 8 weeks will be required for this effort, although equipment has been specified for delivery within 2 weeks and if everything goes as it should this could be shortened.

It was necessary to provide the level of definition included in this report as it has forced us to recognize details which were heretofore assumed in informal discussions but had to be addressed eventually.

Please do not hesitate to let me know if you have any questions.

Sincerely,

Lauren Ames

cy:
A. Drypolcher
C. Nylander
A. Barr
L. Parkinson
G. Daly (w/o attach.)

5881

OUTFALL 055 (TA-16) TREATMENT

-- REVISED PROCESS AND IMPLEMENTATION PLAN --

prepared for:
THE LOS ALAMOS NATIONAL LABORATORY
LOS ALAMOS, NEW MEXICO

June, 1987

under contract:
9-XS5-V3017-1

Delta H Engineering, Ltd.
P. O. Box 2023
Santa Fe, NM 87504
505-983-2594

contact: Lauren Ames

EXECUTIVE SUMMARY

The batch effluent from TA-16 filters 401 and 406 has, on occasion, failed to meet the requirements of the NPDES permit. This has been due to high levels of barium and chemical oxygen demand (COD). High explosive formulations using barium are being phased out so that barium contaminants in the effluent will not present a long term problem. A treatment process addressing COD abatement of the wastewater going to the outfall is presented.

The self-contained treatment module is designed for unattended operation for extended periods of time. Periodic sampling, and biannual carbon changes are the only scheduled maintenance requirements.

This submittal is intended to provide the basis for Delta H Engineering, Ltd. to contract for fabrication of a prototype treatment unit to be installed at a specified location at TA-16.

Table of Contents

1 INTRODUCTION 1
2 TREATMENT UNIT MODIFICATIONS 2
3 DESIGN CRITERIA 4
4 TREATMENT UNIT INSTALLATION 5

4.1 Site Preparation 5
4.2 Treatment Unit Construction Detail 6
4.3 Construction Expediting 7

LIST OF FIGURES

Figure 1	Piping and Instrument Drawing
Figure 2	Site Plan
Figure 3	Equipment Layout & Building Plan
Figure 4	Specification of Collection Tank (T-1)
Figure 5	Sump Pump (P-1) Specification
Figure 6	Level Control (LC-1) Specification
Figure 7	Flow Indicator (FI-1 & FI-2) Specification
Figure 8	Carbon Bed (R-1 thru R-4) Specification
Figure 9	Solenoid Valves (SV-1 thru SV-4)

OUTFALL 055 (TA-16) TREATMENT

— REVISED PROCESS AND IMPLEMENTATION PLAN —

1 INTRODUCTION

Since publication of the title 1 design for this process [1], there has been a change in the composition of high explosive formulations at TA-16. Barium, a RCRA toxic material, has been eliminated and will no longer be found in HE wastes. Consequently, wastewater processing is greatly simplified, needing only capability to reduce chemical oxygen demand (COD) to below the 150/250 mg/L permit level.

To expedite the fabrication and delivery of a COD reduction system, Delta H Engineering has been asked to redesign the process and to follow its fabrication and assist in its installation and startup. This report provides the criteria for redesign and fabrication.

---

1. Outfall 055 (TA-16) Treatment - Conceptual Design, Delta H Engineering, April 1987.

2 TREATMENT UNIT MODIFICATIONS

All equipment associated with barium removal and disposal has been eliminated from the process. Coal-based activated carbon remains the material of choice for COD removal. It has the characteristic of loading a broader spectrum of organic compounds than does activated carbon derived from plant sources, such as coconut or walnut shells. This broad spectrum capture comes at the price of higher loading capacity available with other carbons. The organic concentration in the outfall is low enough such that the recommended canisters may be left in place for at least two years, with the lead canister then disposed of by burning at an adjacent burn pad site and the lag canister put into the lead position. New carbon would be added to the lag position.

Four Westates 110-gallon carbon canisters are specified in a series-parallel configuration. This arrangement is required to accommodate the flow and to provide more than the minimum residence time for thorough COD removal. A timed recycle of the flow through the carbon is provided to prevent initially high COD values from the unit as a new batch of wastewater is passed through it. This revision to the previous treatment process insures against reequlibriation or desorption of the previously

adsorbed organics to the stagnant wastewater in the canisters between batches. Flow indicators and proportional flow hand valves are provided to observe and balance the flow through each portion of the parallel circuit.

A 750-gallon receiver in the treatment unit collects gravity-flow from the pressure filters and discharges, via a submursible pump, through the carbon to the canyon outfall. The first five minutes of flow is recycled back to the receiver to sweep the desorbed organic from the second cartridge. A timer-operated solenoid valve directs the flow forward through the carbon after the recycle period.

Figure 1 is a revised piping and instrument drawing (P&ID).

3 DESIGN CRITERIA

The following criteria guide the process configuration and equipment sizing:

Inflow COD ---------- >150 mg/L
Outflow COD ---------- < 20 mg/L
Flow Cycles per Day --- 2
Flow per Cycle -------- 750 gal
Maximum Flow Rate ----- 25 gpm

The criteria guiding the civil engineering due to site conditions and layout of the treatment unit are found in the notes to Figure 2.

4 TREATMENT UNIT INSTALLATION

It is assumed that Delta H Engineering will supervise the fabrication of the treatment unit and will be available to assist in its installation if required. The following information is therefore brief, and provided with this understanding.

4.1 Site Preparation

After surveying the site with HSE-8 and WX-4 supervision, it was determined that processing would be most economically accomplished using electric power to provide necessary pressure and flow for the treatment unit rather than relying upon gravity. Flow into the unit, however, continues to be by gravity. The unit has been located such that a tenth of an inch per foot drop in grade is available. The data in Figure 2 show the location and grade of the installation and the feed piping changes required.

The unit is housed in an electrically heated, thermostatically controlled, insulated structure, designed to maintain an interior temperature of 38 degrees during wintertime months. The structure sits on four piers, connected by 2 - 2 x 8 beams on each side, as shown in Figure 3. An 8-foot stock tank below grade and under the unit, receives wastewater flow by gravity. A flat,

compacted site may be prepared by a bulldozer or front-end loader.

Approximately 300 feet of power line is required to provide electrical service to the site. Since all service specified for the unit is single phase 110/220 volt, a transformer will be required. The electrical load is less than 5 kVA at full demand. Disconnects and circuit breakers required to meet code are provided as part of the treatment unit. The transformer should be furnished by LANL facilities engineering and specified per their standards.

4.2 Treatment Unit Construction Detail

Two by four framing is used throughout. A gambrel roof allows 8-feet, 3-inches of head room at the center of the structure. The building is painted and shingled with composition lock-tab shingles, and looks much like a garden shed for tool storage.

Double doors provide access to the carbon canisters and allow sunlight into the structure, when open, for infrequent operation or maintenance calls. Three inches of fiberglass insulation in the walls, doors, and against the roof decking, provide for minimum heat loss. An electric baseboard heater operates with a direct-mounted thermostat for control.

PVC piping is used throughout. A detailed piping layout is not provided as plans for this will be developed with the

fabricator. Figure 4 provides the specification for the collection tank, Figure 5 is the specification for the plastic pump and Figure 6, the specification for the level control. In the interest of expediting construction, all equipment is available off-the-shelf.

4.3 Construction Expediting

Because compliance with NPDES must be quickly achieved, Delta H Engineering will locate an outside fabricator and contract for the construction of this unit. This procedure will allow maximum flexibility for such a straight forward process unit by reducing the amount of detailed engineering required and by allowing for close coordination between Delta H engineers and the fabricator. The unit will be delivered and invoiced to LANL when it is complete. Delta H will obtain cost effective quotations and will provide a price and delivery time to LANL ten days after approval of this revised plan.

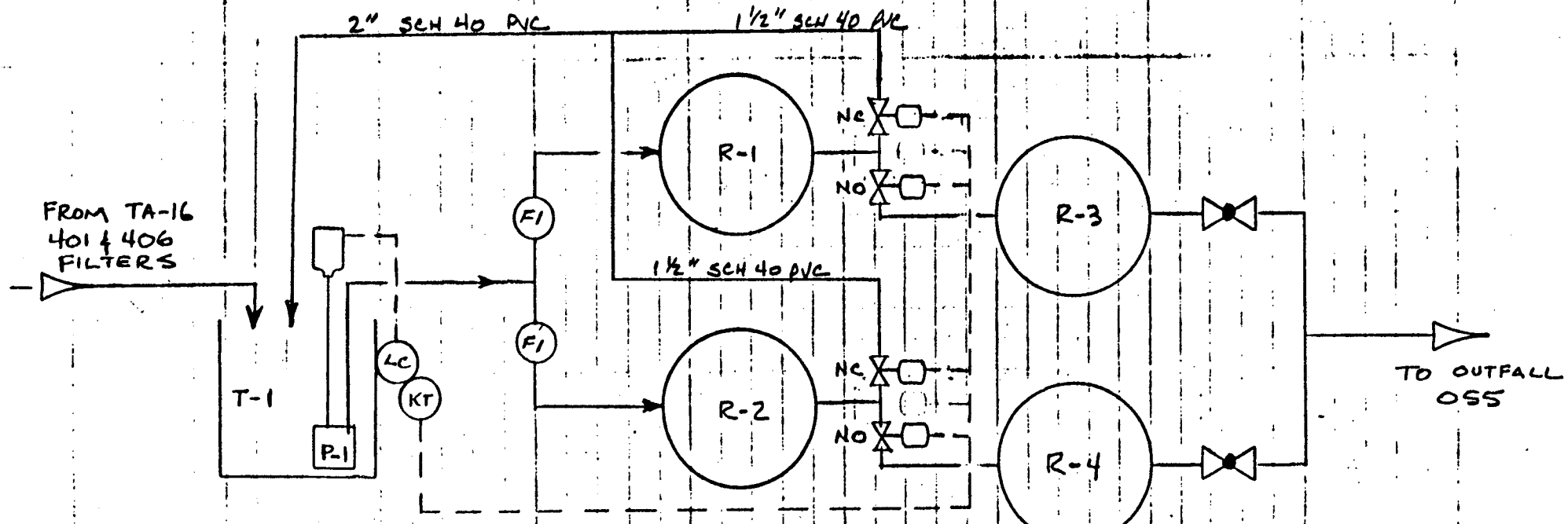

T-1

WASTEWATER
RECEIVER
500 GAL

FIBERGLASS

P-1

WASTEWATER
SUMP PUMP
40 GPM
15 psi
PLASTIC

R-1 to R-4

CARBON COLUMNS
110 GAL EA.
COAL BASE ACTIVE
CARBON
WESTATES
ASC-110
CO-401

FIGURE 1

PIPING AND INSTRUMENT DRAWING

AMPAD 22-142 100 SHEETS
22-144 200 SHEETS

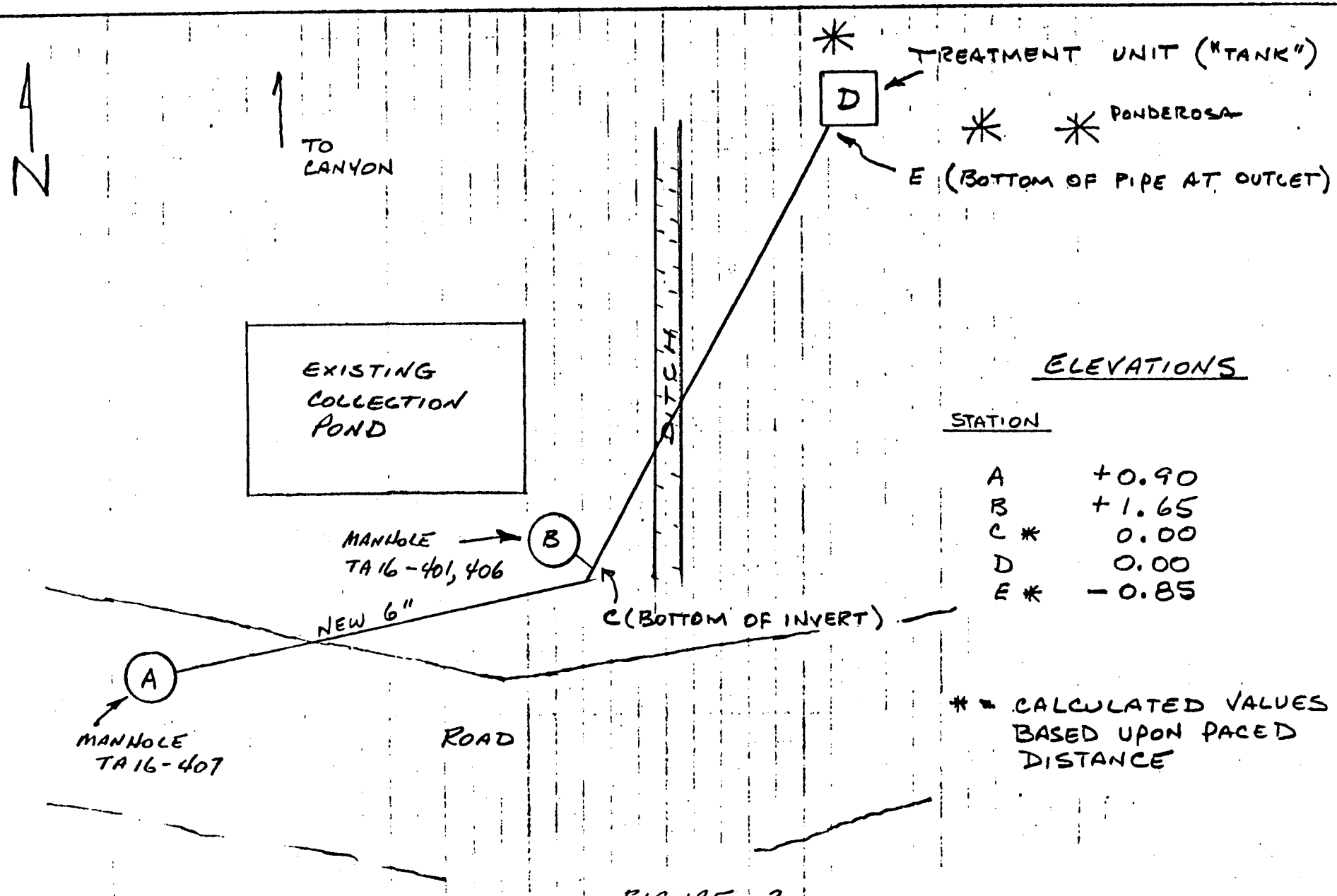

FIGURE 2

SITE PLAN

NOTES TO FIGURE 2

1. APPROXIMATE DISTANCES (PACED)

STATION A TO STATION B	65 FEET
STATION B TO STATION D	85 FEET
LENGTH OF NEW POWER LINE STRUCTURE TA16-402 TO STATION D	300 FEET

2. NEW 6" STEEL DRAIN LINE TO BE RUN FROM STATION A TO STATION D WITH CONNECTION TO STATION B. SLOPE OF PIPE TO BE 1 FT PER 100 LINEAL FEET OF PIPE.

3. OUTLET OF NEW DRAIN LINE WILL BE 0.85 FEET BELOW GRADE AT TREATMENT UNIT SITE. THIS DRAIN WILL DISCHARGE INTO A 8 FT DIA X 2 FT HIGH COLLECTION RECEIVER INSTALLED BELOW GRADE UNDER THE TREATMENT UNIT.

4. 220V/110V SINGLE PHASE 5 KVA SERVICE REQUIRED TO TREATMENT UNIT FROM VICINITY OF STRUCTURE TA16-402.

AMPAD 22-144 200 SHEETS

FIGURE 3

EQUIPMENT LAYOUT & BUILDING PLAN

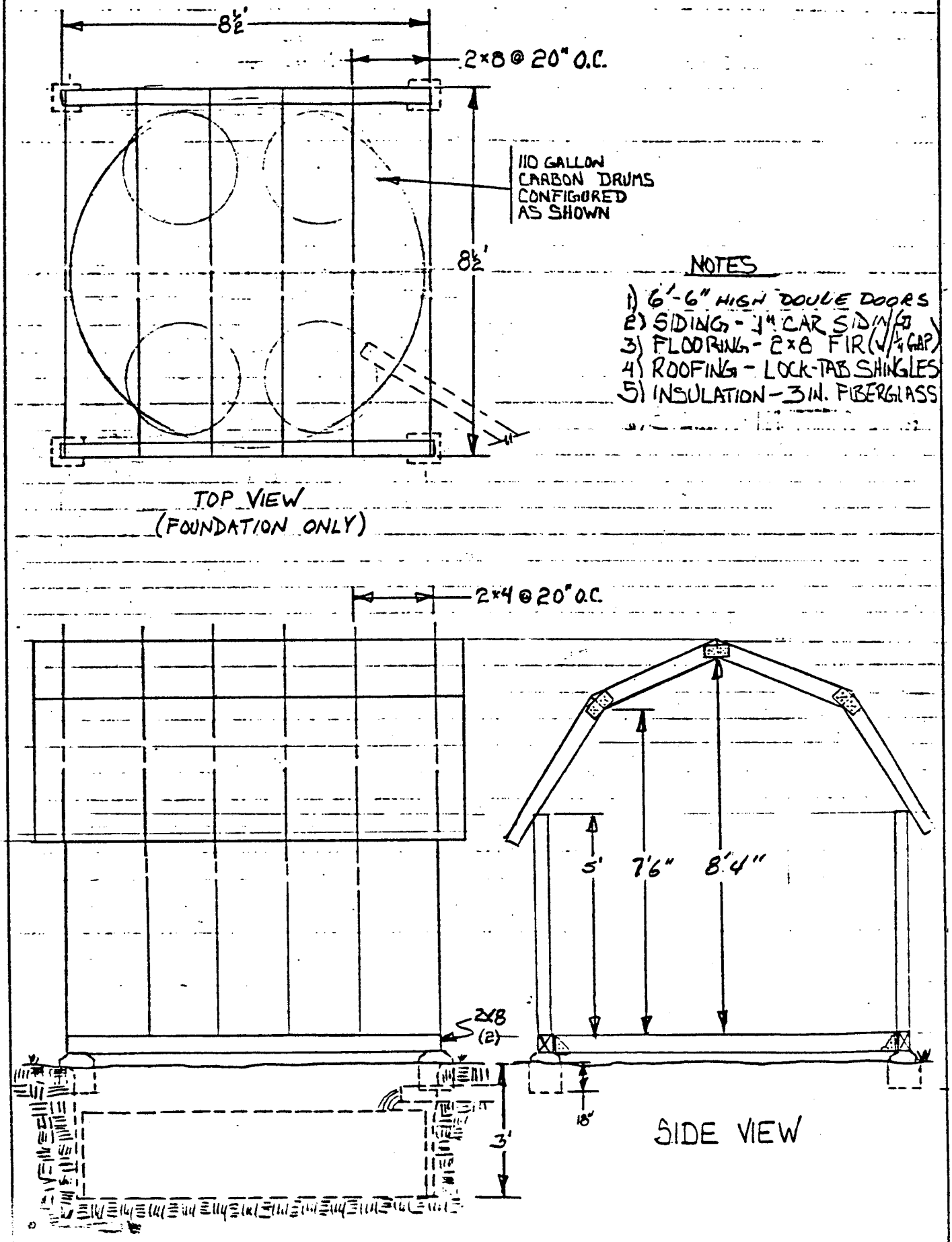

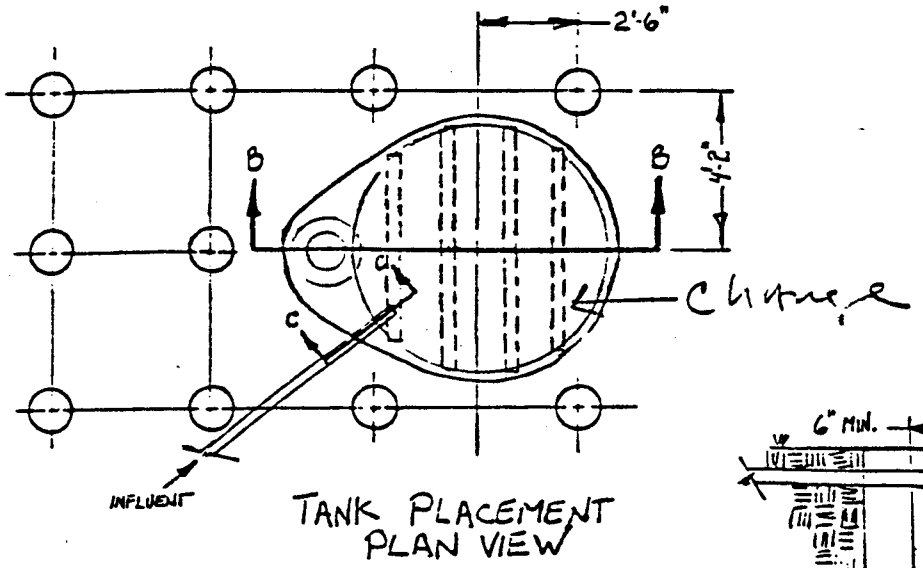

TANK PLACEMENT
PLAN VIEW

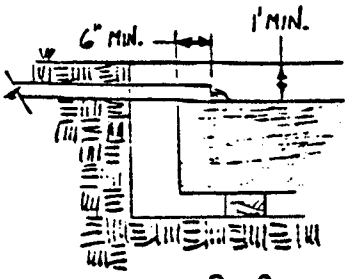

C-C

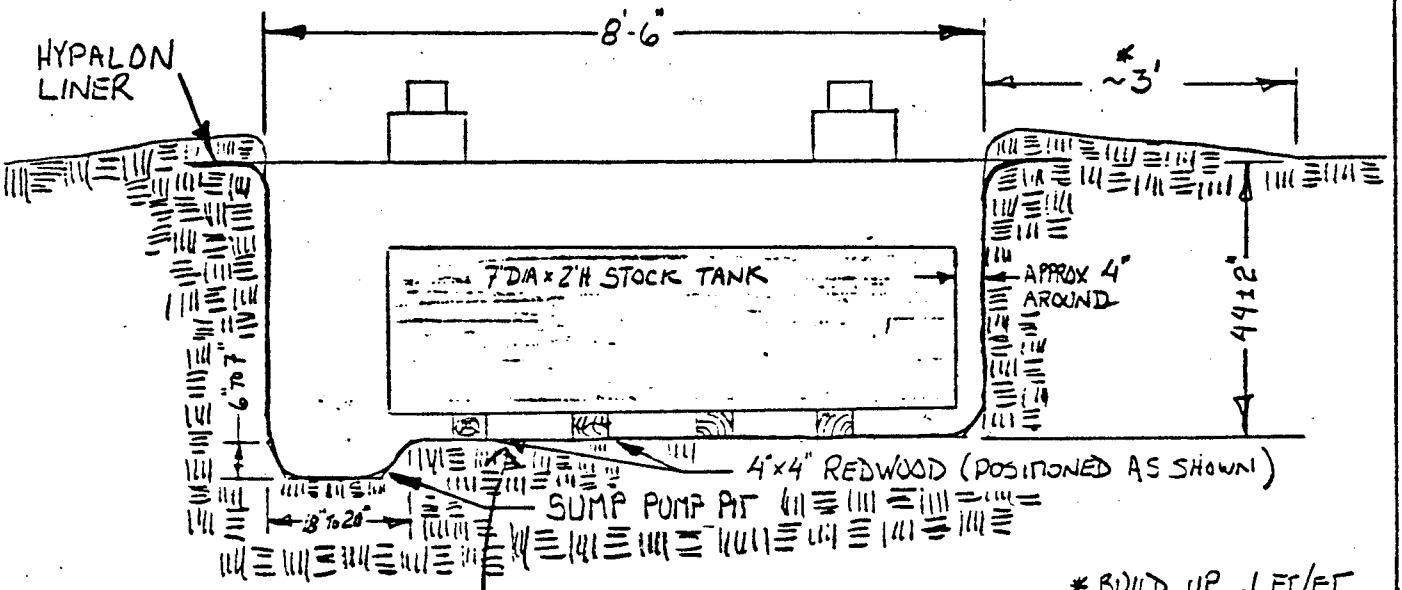

SECTION B-B

* BUILD UP .1 FT/FT
AROUND HOLE
CIRCUMFERENCE
RAIN DRAINAGE

SAND LAYER
2" or 3"

Treated
Westcoast Fur

NOT TO SCALE

TANK CONTAINMENT PLAN

EQUIPMENT DESIGN DRAWING	ΔH Delta H Engineering, Ltd.	
	700 GALLON STOCK TANK	Date 6-29-87 Rev.

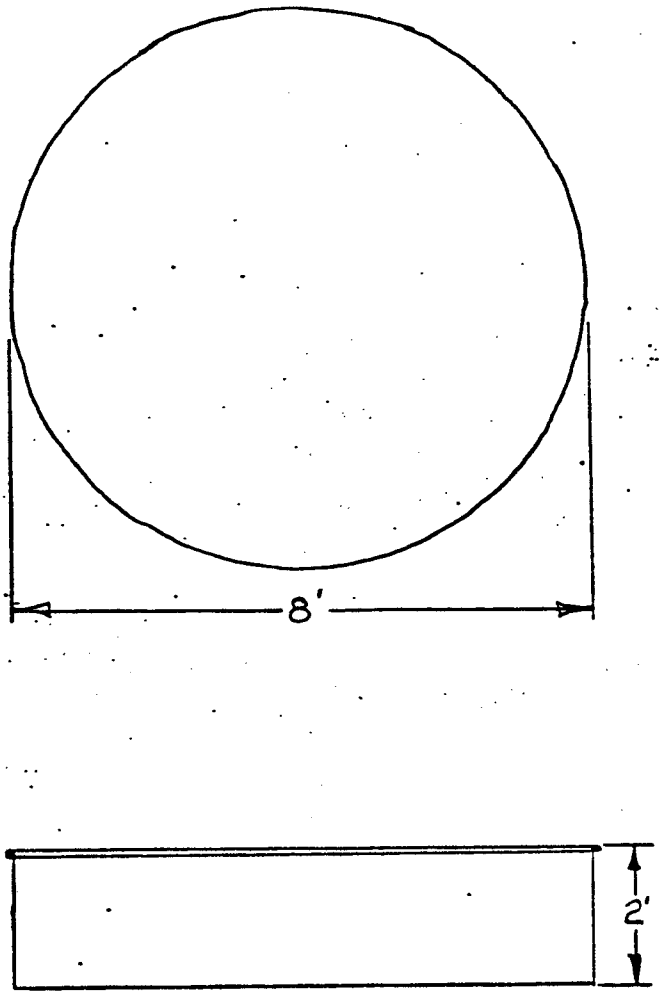

FIGURE 4

AMPAD 22-142 100 SHEETS
22-144 200 SHEETS

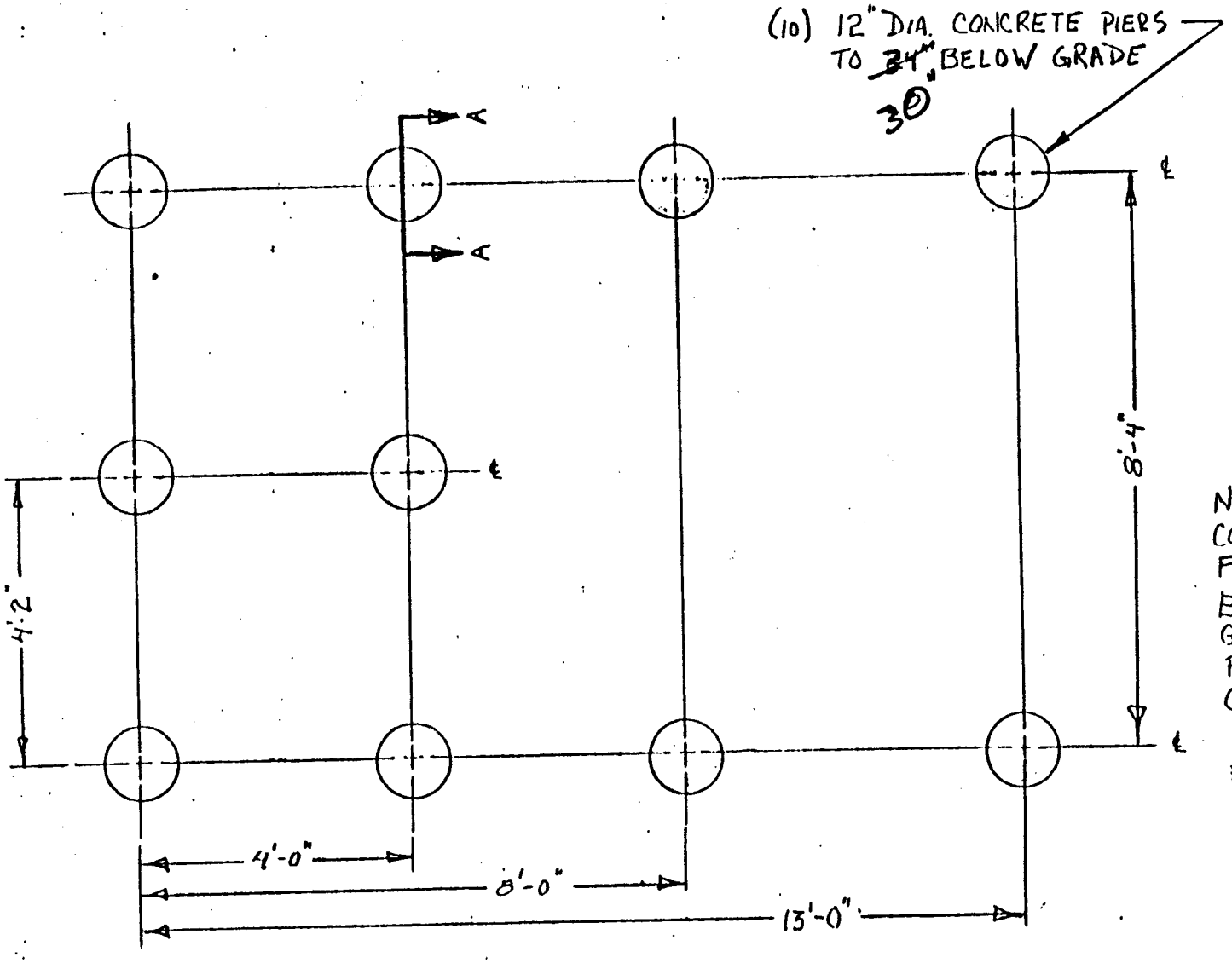

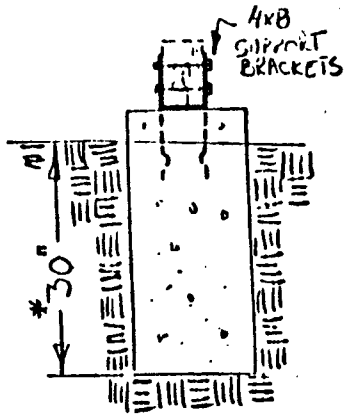

A-A

NOTE:
CONCRETE PIERS TO BE FORMED USING TUBEFORM, EXTENDING 6" ABOVE GRADE AT HIGHEST ELEV. POUR WITH 3,000 PSI CONCRETE.

* PIER DEPTH MAY BE CONTINGENT UPON TEST HOLE ANALYSIS.

NOT TO SCALE

TA-16 OUTFALL TREATMENT PLANT
FOUNDATION PLAN

SERFILCO®

PLASTIC SUMP PUMP

BULLETIN
P-304J
JULY 1985

SERIES 'EC' — *high efficiency for low energy usage*

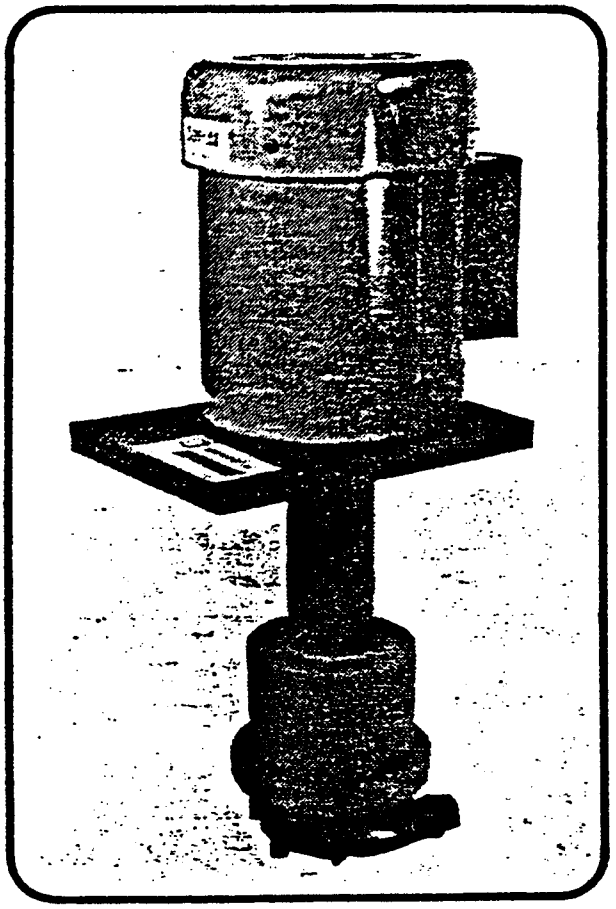

.... for pumping, filtering, mixing, transferring, spraying, recirculating of ....

- **WASTES • ACIDS • PLATING**
- **CHEMICALS • FUME SCRUBBER**
- **PHOTOGRAPHIC SOLUTIONS**
- **ETCHING SOLUTIONS**
- **CLEANING SOLUTIONS**

- NON-METALLIC SOLUTION CONTACT
- MOLDED CHLORINATED POLYVINYL CHLORIDE & KYNAR® & ALL KYNAR
- NO BEARINGS, CANTILEVER SHAFT
- HIGHER EFFICIENCY — LESS HORSEPOWER REQUIRED
- BUILT-IN AUTOMATIC LEVEL CONTROL
- TO 80 GPM OR 47 FT. TDH (250LPM OR 10 M)
- SEAL-LESS, DRY OPERATION WILL NOT DAMAGE PUMP
- INTANK OR OUT-OF-TANK
- HIGH TEMPERATURE OPERATION TO 210°F (99° C)
- CHEMICAL DUTY MOTOR
- ALL KYNAR COMPONENTS ARE 100% PURE NATURAL COLOR PVDF

The Series 'EC' Sump Pump features a cantilevered stainless steel shaft sleeved in CPVC or Kynar which eliminates bearings and seals, resulting in a pump that can run dry without damage. Compound impeller prevents liquid from rising in column, even at maximum TDH, while semi-enclosed bottom impeller provides efficient flow performance at low horsepower.

Unique characteristic of all Series 'EC' pumps is their ability to perform on continuous duty as an automatic level control when optional suction extension pipe is installed. With motor energized, pump will self-prime when liquid is at level of impeller. Solution level will then be pumped down to end of suction extension, pump will lose prime, then automatically reprime when liquid again reaches impeller.

Pump casing may be rotated for choice of discharge direction and flexibility of installation. Discharge pipe assembly, suction extension and suction strainer are available options.

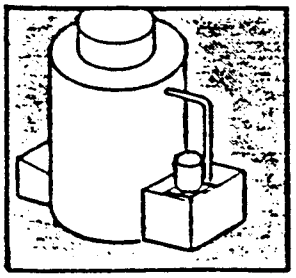

FUME SCRUBBER

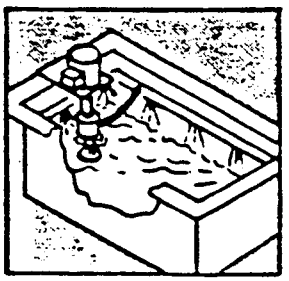

SPRAY PUMPING & PHOTOGRAPHIC

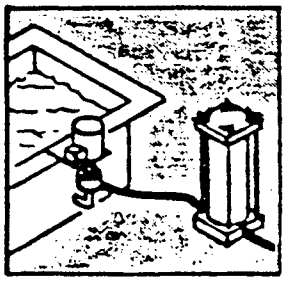

OUT-OF-TANK & PUMPING FILTRATION

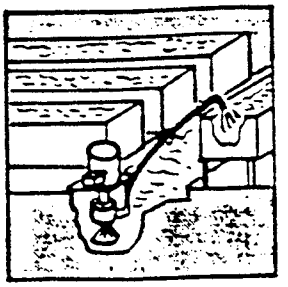

WASTE TREATMENT & POLLUTION CONTROL

SPECIFICATIONS

Standard CPVC models constructed of CPVC with CPVC sleeved stainless steel shaft, Kynar casing, CPVC casing bolts and ethylene propylene 'O' ring. Impeller is semi-enclosed for high efficiency and is compound design. Complete assembly provides non-metallic solution contact. Mounting plate is PVC with pump mounted off-center to allow clearance when mounting to tank flange. Standard Kynar models are 100% Kynar constructed with Kynar mounting plate. Pump casing may be rotated for selection of discharge direction. Chemical duty motors are single or three phase,3450 RPM @ 60 Hz,2850 RPM @ 50 Hz, TEFC painted two-part epoxy enamel. 60 Hz single phase motors include 8 ft. line cord and 3-prong plug,50 Hz include 2.4M line cord.Consult factory for custom mounting plates, explosion-proof or air motors for hazardous environments.

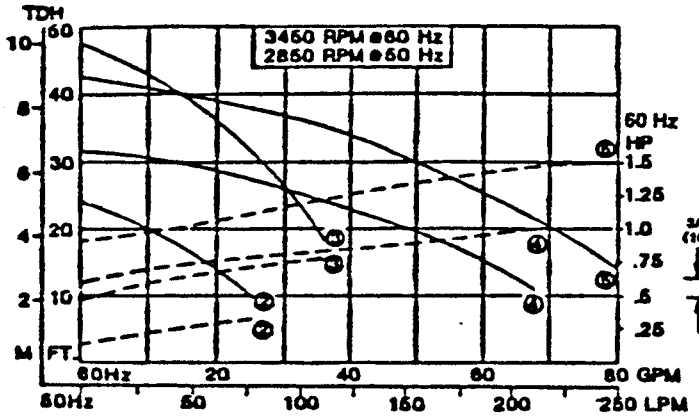

DIMENSIONS–In. (mm)

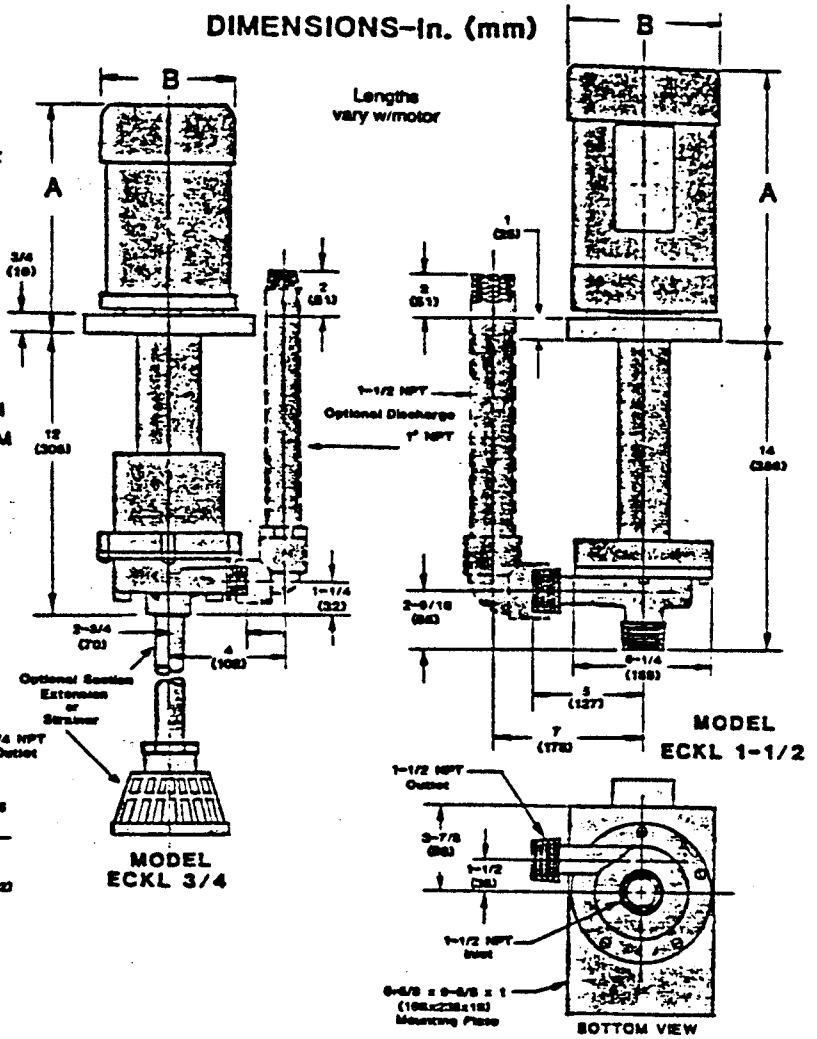

INTANK OR OUT-OF-TANK

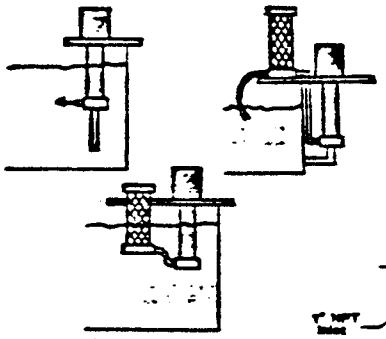

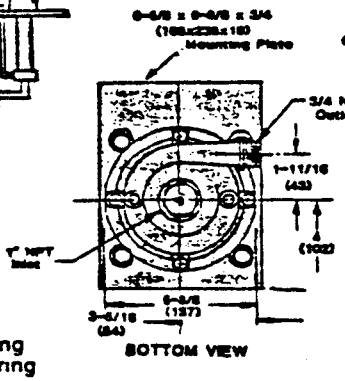

- Mixing or Agitating
- Transfer Pumping
- Recirculatory Pumping for Spraying or Filtering

CPVC/KYNAR MODEL NO.	PRICE CODE NO.	100% KYNAR MODEL NO.	PRICE CODE NO.	MOTOR, TEFC 3450 RPM or 2850 RPM	H.P.	SHIPPING WEIGHT Lbs.	SHIPPING WEIGHT Kg	DIMENSIONS A In.	A mm.	B In.	B mm.
ECKL3/4-2SC-C.3	45-0201	EKL3/4-2SC-C.3	45-0401	115-230/1/50-60	1/3	30	13.6	9	228	6	152
ECKL3/4-2SC-D.3	45-0202	EKL3/4-2SC-D.3	45-0402	230-380-460/3/50-60							
ECKL3/4-3SC-C.75	45-0203	EKL3/4-3SC-C.75	45-0403	115-230/1/50-60	3/4	35	15.9	10-3/16	259	6-5/8	168
ECKL3/4-3SC-D.75	45-0204	EKL3/4-3SC-D.75	45-0404	230-380-460/3/50-60							
ECKL1½-4SC-C1.0	45-0210	EKL1½-4SC-C1.0	45-0410	115-230/1/50-60	1	35	15.9	11-3/16	284	7-1/4	184
ECKL1½4SC-D1.0	45-0211	EKL1½-4SC-D1.0	45-0411	230-380-460/3/50-60							
ECKL1½-5SC-C1.5	45-0212	EKL1½-5SC-C1.5	45-0412	115-230/1/50-60	1-1/2	40	18.1				
ECKL1½-5SC-D1.5	45-0213	EKL1½5SC-D1.5	45-0413	230-380-460/3/50-60							

OPTIONAL

		ADD SUFFIX TO MODEL	MATERIAL	PRICE CODE NO.	MATERIAL	PRICE CODE NO.
Viton 'O' ring change L to V in Model No. and Add Suffix A to PCN.						
Suction strainer	1" NPT	-ST	Polypro	45-0207	-	-
	1½"NPT	-ST	"	45-0214	-	-
Discharge pipe assembly	1" NPT	-DPA	CPVC	45-0209	Kynar	45-0220
	1½"NPT	-DPA	"	45-0215	"	45-0221
Suction Extension	1" NPT 18"(457)lg.	-SX	"	45-0208	"	45-0222
	1½"NPT 18"(457)lg.	-SX	"	45-0216	"	45-0223

Motor Starters and Level Controls — See Product Catalog

F.O.B. Glenview, Illinois

DISTRIBUTED BY

THOMCAT, CEC or CEEBG

SERFILCO, LTD.
1234 Depot Street
Glenview, IL 60025
312/998-9300
800-323-5431

ΔH
Delta H Engineering, Ltd.

LEVEL SWITCHES FLOAT-DISPLACER

DATA SHEET
PAGE
PROJECT
ACCOUNT
DATE 6-29-87
BY

CLIENT LANL
PROJECT OUTFALL 055 (TA-16) TREATMENT
LOCATION TA-16

REVISIONS 1 ____ BY ____ 2 ____ BY ____ 3 ____ BY ____ 4 ____ BY ____

MANUFACTURER ____ SOURCE: QUOTE OF ____

FORM NO. N-728 12/77
BASED ON ISA S20

GENERAL	1	TAG NUMBER								
	2	SERVICE								
	3	ACCOUNT NO.								
	4	LINE NO./VESSEL NO.								
	5	FLOW SHEET								
BODY	6	TYPE								
	7	MATERIAL								
	8	MFR RATING: PRESS / TEMP								
	9	TOP CONN LOCATION								
	10	BTM CONN LOCATION								
	11	CONN SIZE & TYPE								
	12	COOLING FIN								
	13	GAUGE GLASS CONN								
	14	GAUGE GLASS								
	15									
FLOAT DISPL	16	TYPE								
	17	SIZE / MATERIAL								
	18	ROD: LENGTH / MATERIAL								
	19									
SWITCH	20	ENCLOSURE								
	21	QUANTITY / FORM								
	22	RATING: VOLTS / HZ OR DC	115V	60 HZ						
	23	AMPS								
	24	ACTION	OPEN CLOSE	ON LEVEL	INCR DECR	OPEN CLOSE	ON LEVEL	INCR DECR	OPEN CLOSE	ON LEVEL / INCR DECR
	25									
PNEU PILOT	26	ACTION ON LEVEL INC								
	27	OPER MEDIUM / PRESS								
	28									
FLUID DATA	29	FLUID	WATER W/HE							
	30	OPER: PRESS. PSIG / TEMP °F								
	31	MAX: PRESS. PSIG / TEMP °F								
	32	SP GR @ 60°F / @ O.T. - UPPER								
	33	SP GR @ 60°F / @ O.T. - LOWER								
	34	LEVEL REQ'D FOR ACTUATION	ONE FOOT							
	35	ACTUATES	3" TO 12"							
	36	% SOLIDS								
	37	CORROSIVE DUE TO								
	38	MODEL NUMBER								

OPERATING DIFFERENTIAL - 3" TO 12"

FIGURE 6

A WORD ABOUT VARIABLE AREA FLOWMETERS

Variable area flowmeters can provide reliable backup to more expensive and complicated electronic flow measuring devices. These flowmeters are designed according to simple physical laws. Generally, the media enters the bottom or lower end of a precision tapered metering tube and forces a float (or plummet) to rise in direct correlation to flow rate. The float must rise until the annular area between the float and the wall of the tube is such that the pressure through this construction is sufficient to support the float. The flow rate is indicated by the height of the float at equilibrium in the tube. Scales printed on the outside of the tube provide the reading. Due to the variable area, design pressures that drop through these instruments are constant over the full range of flow. Additionally no straight runs of pipe are required at either end of these flowmeters.

For greatest accuracy, variable area flowmeters should be calibrated to the media which they are to handle. They are normally affected by viscosities, specific gravities and temperature.

POSACON SERIES VARIABLE AREA FLOWMETERS

TYPES 805, 807, 815 AND 817
FLOW RATES FROM .08 TO 50 GPM

Our Posacon Series variable area flowmeters are truly unique in design as they will accept an unsurpassed variety of accessories providing optimum service and reliability. These all plastic flowmeters feature molded dovetails on the metering tube, for the mounting of limit switches and continuous read-out signaling devices or adjustable flow indicators.

STANDARD FEATURES

- Polysulfone metering tube for temperatures to 212°F
- PVC, socket type, union connections (140°F max)
- Polypropylene or stainless "floats" (magnetic float required with accessories)
- EPDM O-ring seals for maximum versatility
- Maximum pressure rating of 150 psig @ 72°F
- Adjustable flow indicator lets you quickly check flow range at a distance.
- No ribs or guides to wear or cause float to stick
- Designed to tolerate particle contamination in the fluid
- Standard scales in GPM & LMP

OPTION:

- Special scales to match fluids specific gravity
- Calibration for liquids or gases l/h, m^3/h, %
- Flanged, sanitary connections, or thread union connections
- PVDF or malleable iron connectors
- Viton O-rings

Accessories shown on page 359.

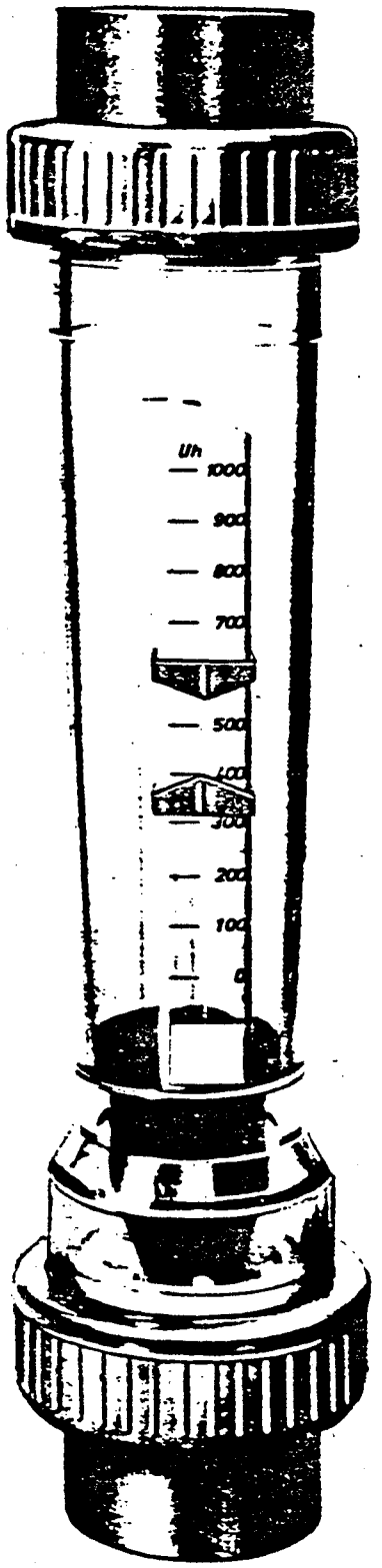

FIGURE 7

POSACON SERIES VARIABLE AREA FLOWMETERS

SPECIFICATIONS FOR TYPE 805 & 815 FLOWMETER WITH POLYPROPYLENE FLOATS

PIPE SIZE (IN.)	SCALE RANGE MEDIA/GPM	TYPE 805 WITH POLYPROPYLENE FLOAT	PRICE EACH ($)	TYPE 815 WITH POLYPROPYLENE FLOAT AND MAGNET	PRICE EACH ($)
	WATER				
1	.08-.7	805-001-512214-01	116.00	815-001-512214-01	161.00
1	.1-1.1	805-001-512214-02	116.00	815-001-512214-02	161.00
1	.2-1.8	805-001-512214-03	116.00	815-001-512214-03	161.00
1	.3-3.0	805-001-512214-04	116.00	815-001-512214-04	161.00
1¼	.4-4.6	805-114-512214-05	157.00	815-114-512214-05	235.00
1¼	.75-7.5	805-114-512214-06	157.00	815-114-512214-06	235.00
2	1.0-12.0	805-002-512214-07	253.00	815-002-512214-07	401.00
2	2.0-18.0	805-002-512214-08	253.00	815-002-512214-08	401.00
2	3.0-28.0	805-002-512214-09	253.00	815-002-512214-09	401.00
2½	6.0-50.0	805-212-512214-10	447.00	815-212-512214-10	663.00
	Na OH 50%				
1	.01-.6	805-001-512214-04 Na OH	116.00	—	
	HCL 30-33%				
1	.06-.58	805-001-512214-01 HCL	116.00	815-001-512214-01 HCL	161.00
1	.075-.95	805-001-512214-02 HCL	116.00	815-001-512214-02 HCL	161.00
1	.1-1.6	805-001-512214-03 HCL	116.00	815-001-512214-03 HCL	161.00
1	.2-2.5	805-001-512214-04 HCL	116.00	815-001-512214-04 HCL	161.00

SPECIFICATIONS FOR TYPE 807 & 817 FLOWMETERS WITH STAINLESS STEEL FLOATS

PIPE SIZE (IN.)	SCALE RANGE MEDIA/GPM	TYPE 807 WITH STAINLESS STEEL FLOAT	PRICE EACH ($)	TYPE 817 WITH STAINLESS STEEL FLOAT AND MAGNET	PRICE EACH ($)
	WATER				
1	.1-1.1	807-001-512214-01	116.00	817-001-512214-01	161.00
1	.2-1.8	807-001-512214-02	116.00	817-001-512214-02	161.00
1	.3-3.0	807-001-512214-03	116.00	817-001-512214-03	161.00
1	.4-4.6	807-001-512214-04	116.00	817-001-512214-04	161.00
1¼	.75-7.5	807-114-512214-05	157.00	817-114-512214-05	235.00
1¼	1-12	807-114-512214-06	157.00	817-114-512214-06	235.00
2	2-18	807-002-512214-07	253.00	817-002-512214-07	401.00
2	3-28	807-002-512214-08	253.00	817-002-512214-08	401.00
2	4-46	807-002-512214-09	253.00	817-002-512214-09	401.00
2½	10-80	807-212-512214-10	447.00	817-212-512214-10	663.00
	Na OH 50%				
1¼	.025-2.5	807-114-512214-05 Na OH	157.00	—	

NOTE: All scales are based on a process fluid temperature of 68°. Other materials of construction are available on request.

EQUIPMENT SPECIFICATION SHEET	ΔH Delta H Engineering, Ltd.	-16 WASTEWATER TREATMENT UNIT
	Figure 8: Carbon Beds (R1, R2, R3, R4)	Date 4-6-87 Rev. 6-29-87

Type: Activated Carbon, Type CO-401

Manufacturer: Westates Carbon Co., Inc. 213-737-2631

Particle size: 8 x 30 mesh

Apparent density: 30 lb/cf

Iodine Number: 900

Weight, carbon: 400 lbs each bed

Housing diam., in.: 30

Housing height, in.: 41

Housing mrtl: Epoxy coated steel

Internal distributors: 1½" SCH 40 PVC

Connections: 1½" NPTF, top; 3/4" NPTF, side drain

Model No.: ASC-110

GENERAL SERVICE
2 Way Solenoid Valves

Normally Closed and Normally Open Operation
Brass, Stainless Steel and Nylon Bodies • ¼" to 3" N.P.T.

ASCO Red-Hat
BULLETINS
8210, 8211

General Description

These valves provide long trouble-free life on general service applications. A broad selection of body materials and operating pressures is available.

Applications

These dependable 2 way valves are used in:

- pumps
- spraying
- cooling
- air dryers
- pollution controls
- laundry equipment
- irrigation
- compressors
- dishwashers
- water treatment

Special valves available for: • dry air-gas • continuous cycling • exceptionally long life • heavy-duty operation • clickless and quiet (no AC hum) operation. Refer to Long Life Construction.

Specifications

Operation: Two types available:

(a) Normally Closed — valves closed when de-energized, open when energized.

(b) Normally Open — valves closed when energized, open when de-energized.

Valve Parts in Contact with Fluid:

Body — Brass, Stainless Steel (Series 300), Nylon or Bronze, as listed.

Seals and Discs — Buna "N," Teflon* or Ethylene Propylene, as listed.

Disc Holder — Nylon, as listed.

Core Tube — 305 s.s.

Core and Plugnut — 430F s.s.

Springs — 302 s.s.

Shading Coil — Copper (brass and nylon body); Silver (stainless steel body).

Solenoid Enclosures: Two types available:

(a) Type 1 — General Purpose.

(b) Types 4 and 7 (C and D) — Combination Watertight and Explosion-Proof. Also meets Types 3 and 9 (E, F and G). Refer to Engineering Section for definitions and details. Consult your local ASCO office for Types 3S and 4X.

Electrical: Standard Voltages:

24, 120, 240, 480 volts, AC, 60 Hz (or 110, 220 volts, AC, 50 Hz).

6, 12, 24, 120, 240 volts, DC.

Other voltages available when required.

*DuPont Co. trademark.

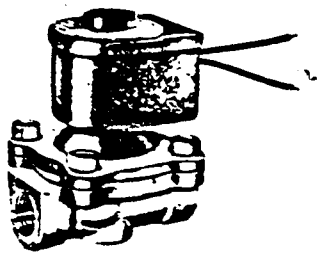

Coil: Continuous Duty Molded Class A, B, F and H, as listed.

Temperature:

Fluid: To 210°F., as listed.

Ambient: Nominal Range, 32°F. to 77°F. (104°F. occasionally — refer to Engineering Section.)

Installation:

Dimensions: Refer to Dimensions Tables for envelope size and mounting.

Attitude: Valves may be mounted in any position except as noted in Dimensions Table.

Approvals: UL listed and CSA certified, as indicated. Refer to Engineering Section for details and coding explanation.

SPECIFICATIONS

Pipe Size (ins.)	Orifice Size (ins.)	Cv Flow Factor	Operating Pressure Differential (psi) Minimum	Maximum Air-Inert Gas AC	Maximum Air-Inert Gas DC	Maximum Water AC	Maximum Water DC	Maximum Light Oil @ 300 SSU AC	Maximum Light Oil @ 300 SSU DC	Maximum Fluid Temp. °F. AC	Maximum Fluid Temp. °F. DC	Type 1 General Purpose Solenoid Enclosure Catalog Number	Constr. Ref. No. ①	UL Listing	Types 4 and 7 (C and D) Watertight and Explosion-Proof Solenoid Enclosure Catalog Number	UL Listing	Watt Rating/ Class of Coil Insulation AC	Watt Rating/ Class of Coil Insulation DC
NORMALLY CLOSED OPERATION, Forged Brass Body, Buna "N" or Teflon③ Seating for General Service																		
¼	5/16	1.2	5	125	—	120	—	—	—	180	—	8210B20	3D	•	—	—	6.5/B	—
⅜	¼	1.2	5	125	—	125	—	—	—	180	—	8210B21	3D	•	—	—	6.5/B	—
	⅜	1.5	①	125	40	125	40	—	—	180	150	8210C73④	1P	•	8211C73④	•	6/A	11.2/A
	⅜	3	0	100	40	100	40	—	—	180	150	8210C93	5D	○	8211C93	○	11/A	11.2/A
	⅜	3	5	200	125	135	100	135	100	180	150	8210D1	6D	○	8211D1	○	6/A	11.2/A
	⅝	3	5	300	—	300	—	300	—	175	—	8210C6	5D	○	8211C6	○	16.7/F	—
½	7/16	2.2	①	125	40	125	40	—	—	180	150	8210A15	2P	•	8211A15	•	6/A	11.2/A
	⅝	4	5	200	125	135	100	135	100	180	150	8210D2	6D	○	8211D2	○	6/A	11.2/A
	⅝	4	0	100	40	100	40	—	—	180	150	8210C94	5D	○	8211C94	○	11/A	11.2/A
	⅝	4	5	300	—	300	—	300	—	175	—	8210C7	5D	○	8211C7	○	16.7/F	—
¾	¾	5	0	100	40	100	40	—	—	180	150	8210D95	8D	○	8211D95	○	11/A	11.2/A
	¾	5	5	125	100	125	90	125	75	180	150	8210D9	9D	○	8211D9	○	6/A	11.2/A
	¾	6	0	350	200	300	180	200	180	200	77	8210B26④	10P	⑤	8211B26④	⑤	15.4/A	30.6/H
	¾	6.5	5	250	125	150	125	100	125	180	150	8210D3	11D	○	8211D3	○	6/A	11.2/A
1	1	13	5	125	125	125	125	100	125	180	150	8210D4	12D	○	8211D4	○	6/A	11.2/A
	1	13.5	10	300	225	300	200	300	200	200	180	8210B78④	13P	⑤	8211B78④	⑤	16.7/F	16.8/A
	1	13.5	0	300	—	225	—	115	—	200	—	8210B27	14P	•	8211B27	•	20/F	—
	1	13	0	125	100	125	100	125	80	180	77	8210B54	31D	⑤	8211B54	⑤	15.4/A	30.6/H
1¼	1⅛	15	5	125	125	125	125	100	125	180	150	8210D8	16D	○	8211D8	○	6/A	11.2/A
	1⅛	15	10	300	225	300	200	300	200	200	180	8210B80④	17P	—	8211B80④	—	16.7/F	16.8/A
	1⅛	15	0	125	100	125	100	125	80	180	77	8210B55	32D	⑤	8211B55	⑤	15.4/A	30.6/H
1½	1¼	22.5	5	125	125	125	125	100	125	180	150	8210D22	18D	○	8211D22	○	6/A	11.2/A
	1¼	22.5	10	300	225	300	200	300	200	200	180	8210B82④	19P	—	8211B82④	—	16.7/F	16.8/A
	1¼	22.5	0	125	100	125	100	125	80	180	77	8210B56	33D	⑤	8211B56	⑤	15.4/A	30.6/H
2	1¾	43	5	125	50	125	50	90	50	180	150	8210100	20P	—	8211100	—	6/A	11.2/A
2½	1¾	45	5	125	50	125	50	90	50	180	150	8210101	21P	—	8211101	—	6/A	11.2/A
3	3	101	10	250	—	250	—	250	—	200	—	8210B51①	22P	—	8211B51①⑨	—	28/H	—

FIGURE 9

SPECIFICATIONS (continued)

Pipe Size (ins.)	Orifice Size (ins.)	Cv Flow Factor	Operating Pressure Differential (psi) Minimum	Maximum Air-Inert Gas AC	Maximum Air-Inert Gas DC	Maximum Water AC	Maximum Water DC	Maximum Light Oil @ 300 SSU AC	Maximum Light Oil @ 300 SSU DC	Maximum Fluid Temp. °F. AC	Maximum Fluid Temp. °F. DC	Type 1 General Purpose Solenoid Enclosure Catalog Number	Constr. Ref. No. ③	UL Listing	Types 4 and 7 (C and D) Watertight and Explosion-Proof Solenoid Enclosure Catalog Number	UL Listing	Watt Rating/ Class of Coil Insulation AC	Watt Rating/ Class of Coil Insulation DC
NORMALLY OPEN OPERATION,② Forged Brass Body, Buna "N" Seating for General Service																		
3/8	3/8	3	0	125	125	125	125	125	80	180	150	8210C33	23D	•	8211C33	•	10.5/A	11.2/A
1/2	3/8	4	0	125	125	125	125	125	80	180	150	8210C34	23D	•	8211C34	•	10.5/A	11.2/A
3/4	3/4	5.5	0	125	125	125	125	125	80	180	150	8210C35	25D	•	8211C35	•	10.5/A	11.2/A
	3/4	6.6	5	250	250	200	200	200	200	180	180	8210C13	24D	•	8211C13	•	15.4/A	16.8/A
1	1	13	0	125	—	125	—	125	—	180	—	8210B57	34D	•	—	—	20/F	—
	1	13	5	125	125	125	125	125	125	180	180	8210D14	26D	⑤	8211D14	—	15.4/A	16.8/A
1 1/4	1 1/8	15	0	125	—	125	—	125	—	180	—	8210B58	35D	•	—	—	20/F	—
	1 1/8	15	5	125	125	125	125	125	125	180	180	8210D18	28D	—	8211D18	—	15.4/A	16.8/A
1 1/2	1 1/4	22.5	0	125	—	125	—	125	—	180	—	8210B59	36D	•	—	—	20/F	—
	1 1/4	22.5	5	125	125	125	125	125	125	180	180	8210D32	29D	—	8211D32	—	15.4/A	16.8/A
2	1 3/4	43	5	125	125	125	125	125	125	180	150	8210I03	30P	—	8211I03	—	15.4/A	16.8/A
2 1/2	1 3/4	45	5	125	125	125	125	125	125	180	150	8210I04	27P	—	8211I04	—	15.4/A	16.8/A
NORMALLY CLOSED OPERATION, Forged Brass Body, Ethylene Propylene Diaphragm for Hot Water Service																		
3/8	5/8	3	5	—	—	125	100	—	—	210	150	8210D1HW	6D	⑤	8211D1HW	—	6/A	11.2/F
	5/8	3	④	—	—	100	40	—	—	210	150	8210C93HW	5D	⑤	8211C93HW	⑤	11/A	11.2/F
1/2	5/8	4	5	—	—	125	100	—	—	210	150	8210D2HW	6D	⑤	8211D2HW	—	6/A	11.2/F
	5/8	4	④	—	—	100	40	—	—	210	150	8210C94HW	5D	⑤	8211C94HW	⑤	11/A	11.2/F
3/4	3/4	5	5	—	—	125	100	—	—	210	150	8210D9HW	9D	⑤	8211D9HW	—	6/A	11.2/F
	3/4	5	④	—	—	100	40	—	—	210	150	8210D95HW	8D	⑤	8211D95HW	⑤	11/A	11.2/F
NORMALLY CLOSED OPERATION, Nylon Body, Buna "N" Diaphragm for General Service																		
1/8" O.D. Compression	5/16	1.2	5	125	—	125	—	—	—	130	—	8210B10	4D	•	—	—	6.5/B	—
NORMALLY CLOSED OPERATION, Stainless Steel Body, Buna "N" Diaphragm for Corrosive Liquids and Gases																		
3/8	3/8	1.5	①	125	40	125	40	—	—	180	150	8210A36⑥	1P	•	8211A36⑥	•	6/A	11.2/A
1/2	7/16	2.2	①	125	40	125	40	—	—	180	150	8210A37⑥	2P	•	8211A37⑥	•	6/A	11.2/A
	5/8	4	0	125	40	125	40	125	—	175	150	8210C87	7D	•	8211C87	•	16.7/F	11.2/A
3/4	5/8	4.5	0	125	40	125	40	125	—	175	150	8210C88	7D	•	8211C88	•	16.7/F	11.2/A
1	1	11.2	0	125	100	125	100	125	80	180	77	8210D89	15D	⑤	8211D89	⑤	15.4/A	30.6/H
NORMALLY OPEN OPERATION, Stainless Steel Body, Buna "N" Diaphragm for Corrosive Liquids and Gases																		
1/2	5/8	3	0	125	125	125	125	100	80	180	150	8210B30	37D	•	8211B30	—	10.5/A	11.2/A
3/4	5/8	3	0	125	125	125	125	100	80	180	150	8210B38	38D	•	8211B38	—	10.5/A	11.2/A

Notes: ① 5 psi on air and inert gas; 1 psi on water.
② Letter "D" denotes diaphragm construction; "P" denotes piston construction.
③ Main valve has bronze body.
④ "0" psi on AC construction, 1/4 psi on DC.
⑤ UL listed as General Purpose Valve on AC voltage only.
⑥ Valve includes Ryton (Phillips Petroleum trademark) piston.
⑦ Valve includes nylon disc holder, except 8210B57, 8210B58, 8210B59.
⑧ Valves provided with Teflon main seat.
⑨ Suitable for Types 4 and 7 (C and D) only and has a temperature range code T2B.

ELECTRICAL INFORMATION

Standard Coil and Class of Insulation	Watt Rating and Power Consumption: DC Watts	AC Watts	AC VA Holding	AC VA Inrush	Spare Coil Part No. AC	Spare Coil Part No. DC
A	11.2	6	15.6	34	96-619	27-463
F	11.2	—	—	—	—	66-611
A	16.8	10.5 & 11	23	55	27-462	96-671
H	30.6	—	—	—	—	74-073
A	—	15.4	23.6	70	96-817	—
F	—	16.7	35	78	64-982	—
F	—	20	43	240	99-257	—
H	—	28	57	250	222-345	—
B	—	6.5	9.2	17.3	204-945	—

OPTIONAL FEATURES

Many optional electrical and construction features are available, refer to Optional Feature Section

ORDERING INFORMATION

IMPORTANT: We must have CATALOG NUMBER, VOLTAGE and HERTZ, operating pressure and fluid handled. Use strainers with solenoid valves.

ASCO Automatic Switch Co. 50-56 Hanover Road, Florham Park, New Jersey 07932, Tel. (201) 966-2000

© Automatic Switch Co. MCMLXXXIII All Rights Reserved

Printed in U.S.A.

DIMENSIONS (in inches)

(Watertight and Explosion-Proof Solenoid Enclosure shown dotted-in. Details available on request.)

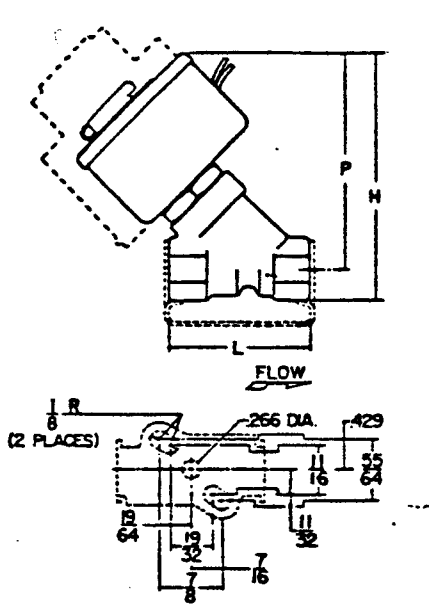

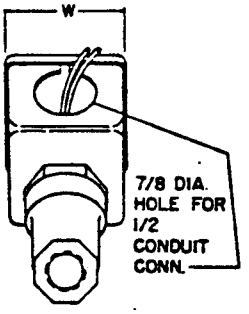

Mounting Bracket Available — refer to Price Schedule.

Constr. Refs. 1 and 2

Constr. Ref.	H	L	P	W
1*	3 15/16	1 29/32	3 1/2	1 13/16
2*	3 29/32	2 9/32	3 3/8	1 21/32

*DC dimensions slightly larger.

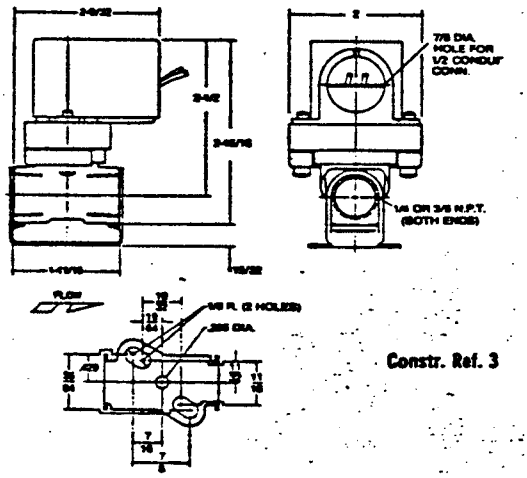

Constr. Ref. 3

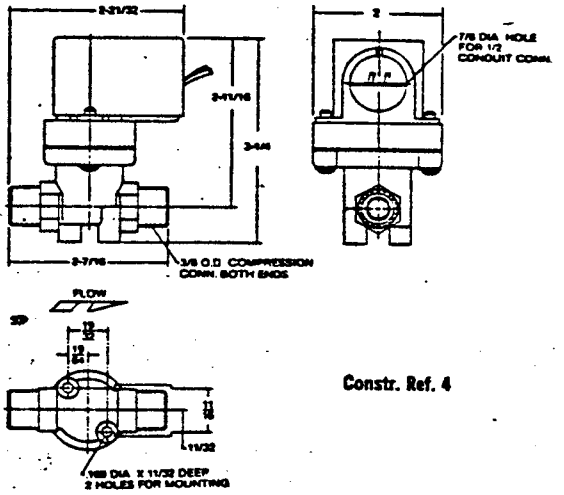

Constr. Ref. 4

Constr. Refs. 5 to 38

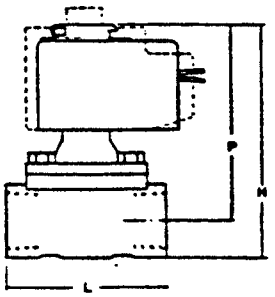

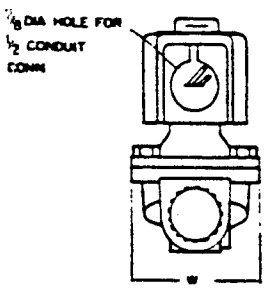

Constr. Ref.	H	L	P	W	Constr. Ref.	H	L	P	W
5	3 29/32	2 3/4	3 11/32	2 5/16	22#	13 7/8	10 1/2	10 5/32	8 15/16
6*	3 13/32	2 3/4	2 27/32	2 5/16	23	4 13/32	2 3/4	3 27/32	2 9/32
7	4 7/32	2 13/16	3 1/2	2 13/32	24	5 1/16	3 25/32	4 7/16	2 3/4
8	4 5/32	2 13/16	3 1/2	2 5/16	25	4 5/8	2 13/16	4	2 9/32
9*	3 5/8	2 13/16	3	2 5/16	26	6 17/32	3 3/4	4 29/32	2 15/16
10*#	5 1/4	2 13/16	4 29/32	2 5/16	27	8 7/32	5 1/2	5 15/32	5 3/16
11*	4 5/32	3 25/32	3 17/32	2 3/4	28	6 17/32	3 21/32	4 29/32	3 3/8
12*	5 3/8	3 3/4	4	2 15/16	29	7 1/32	4 3/8	5 1/16	3 3/4
13*	5 7/8	3 3/4	4 1/4	4 1/4	30	8 7/32	5 1/16	5 15/32	4 11/16
14#	6 17/32	3 15/16	5 23/32	3 1/4	31*	5 1/4	3 3/4	4 7/16	3 1/4
15*	6 3/32	3 3/4	5 7/32	3 27/32	32*	5 11/16	3 21/32	4 11/16	3 1/4
16*	5 5/8	3 21/32	4	3 3/8	33*	6 1/16	4 3/8	4 15/16	3 29/32
17*	5 7/8	3 21/32	4 1/4	4 11/16	34#	6 29/32	3 3/4	6 3/32	3 1/4
18*	6 1/8	4 3/8	4 5/32	3 3/4	35#	7 11/32	3 21/32	6 11/32	3 1/4
19*	6 3/8	4 3/8	4 13/32	5 19/32	36#	7 21/32	4 3/8	6 9/16	3 29/32
20*	7 5/16	5 1/16	4 9/16	4 11/16	37	4 11/16	2 13/16	3 31/32	2 13/32
21*	7 5/16	5 1/2	4 9/16	5 3/16	38	4 11/16	2 13/16	3 31/32	2 13/32

*DC dimensions slightly larger.

All valves mountable in any position without affecting operation, except construction noted # which must be mounted with solenoid vertical and upright.

Automatic Switch Co. 50-56 Hanover Road, Florham Park, New Jersey 07932, Tel. (201) 966-2000

Printed in U.S.A.

© Automatic Switch Co. MCMLXXXIII All Rights Reserved