Department of Energy
Field Office, Albuquerque
Los Alamos Area Office
Los Alamos, New Mexico 87544

Barbara

OCT - 2 1995

OCT - 6 1995

Benito Garcia, Bureau Chief
Hazardous and Radioactive Materials Bureau
New Mexico Environment Department
2044 Galisteo St., Building A
P. O. Box 26110
Santa Fe, NM 87505

Dear Mr. Garcia:

Subject: Request for Changes to LANL Open Burn Units Technical Area (TA) 16-387 and TA-16-394

The Department of Energy (DOE)(owner/operator) and the University of California (co-operator) request changes to Los Alamos National Laboratory (LANL) Open Burn Units TA-16-387 and TA-16-394 to allow for upgrades to each of these units. The upgrades will be: (1) using propane burners instead of wood fuel for destruction of the explosive contamination on waste; (2) replacement of a 250 gallon capacity burn tray with one smaller 75 gallon capacity burn tray; and (3) installing weather covers. Enclosed is information on these units. In addition, a revised Resource Conservation and Recovery Act Part B application containing the revised Part A application was submitted to the New Mexico Environment Department on June 30, 1995.

The Open Burn Units are operating pursuant to New Mexico Administrative Code Title 20, Chapter 4, Part 1 (20 NMAC 4.1), Subparts V and IX.

LANL originally mentioned these improvements at a meeting with the Hazardous and Radioactive Materials Bureau on April 6, 1995. Barbara Hoditschek and Stuart Dinwiddie of your staff were present at the meeting and requested a sampling of the areas prior to any changes to the units. A sampling plan and strategy was approved and sampling was completed at these units on July 31, 1995.

The use of propane burners instead of wood fuel for destruction of explosive contamination is a technology improvement that will reduce air emissions, reduce the amount of ash produced, and will provide a controlled method to measure and maintain consistent destruction temperature.

The weather covers will be on rails to allow repositioning during operation of the units. These covers will protect the units from precipitation when the units are not in operation. This will reduce the amount of stormwater runoff from the units,

5979

OCT - 2 1995

and will allow for compliance with the National Pollutant Discharge Elimination System (NPDES) Stormwater Pollution Prevention Plan.

Enclosed is a brief discussion of the specific upgrades with figures of the propane burners and weather cover placement.

Upon your review of this request, please inform DOE and LANL of your decision so that these upgrades can be implemented as soon as possible.

If you have any questions, please contact Jody Plum of my staff at (505) 665-5042.

Sincerely,

Joseph C. Vozella
Assistant Area Manager
Office of Environment and Projects

LAAMEP:7HJP-004

Enclosures

cc w/enclosures:
B. Hoditschek
NMED
2044 Galisteo St., Bldg. A
P. O. Box 26110
Santa Fe, NM 87505

Request for Process Improvements at TA-16 Burn Ground

TA-16-387 Flash Pad

- **Set up three propane burners for use as an alternate to wood fuel in flashing suspect HE contaminated equipment and materials.** Each burner will have an adjustable heat output in the range of 1M - 1.8M BTU/hr. and a flame length of 8-12 ft. It is estimated that 1M BTU/ton (11 lbs. liquid propane per ton of equipment flashed) will be required to heat up and maintain the material at 800-1000 °F to ensure destruction of all potential explosive contamination. Emissions estimates from "Screen 2", an EPA approved air impact model, indicate that use of propane will reduce average total yearly emissions (CO, NOx, PM, and VOC/HAPs) from 524 lb/yr to 3.0 lb/yr. Propane burners will also allow materials for flashing to be thermocoupled to record and document that adequate temperature levels were reached and maintained for the required time. As a result, flashed materials can be designated as non-HE contaminated and will be available for commercial salvage as opposed to disposal in the LANL administratively controlled landfill.

- **Install a weather cover over the TA-16-387 Flash Pad.** The proposed weather cover will be positioned on rails to allow retraction during flashing operations. This cover will allow compliance with Stormwater Pollution Prevention Program requirements.

See Figures 1 and 2 attached.

TA-16-394 Burn Tray

- **Resize Burn Tray.** Replace the current burn tray with a smaller 75 gallon unit.

- **Install three propane burners.** One adjustable 50-200,000 BTU/hr. propane burner will be placed under the 75 gallon tray to vaporize the HE contaminated liquids if dilute with water. Two 25-50,000 BTU/hr. propane burners will be placed over the tray to ignite organic vapors. Any water in the mixture will be boiled off in the process. Heat supplied to the burn tray is expected to be 100,000 BTU/hr., translating to a propane usage of ~1.1 lb./50 gallon burn.

- **Install a weather cover over the TA-16-394 Burn Tray.** The proposed weather cover will be positioned on rails to allow retraction during burn operations. This cover will allow compliance with Stormwater Pollution Prevention Program requirements.

See Figures 3 and 4 attached.

Post-it™ brand fax transmittal memo 7671	# of pages ▸ 1
To Hilary Naskin	From Cindy Sandoval
Co. ESH-19	Co. ESA-WMA
Dept. 7-7954	Phone # 7-8393
Fax # 7-5224	Fax # 5-5548

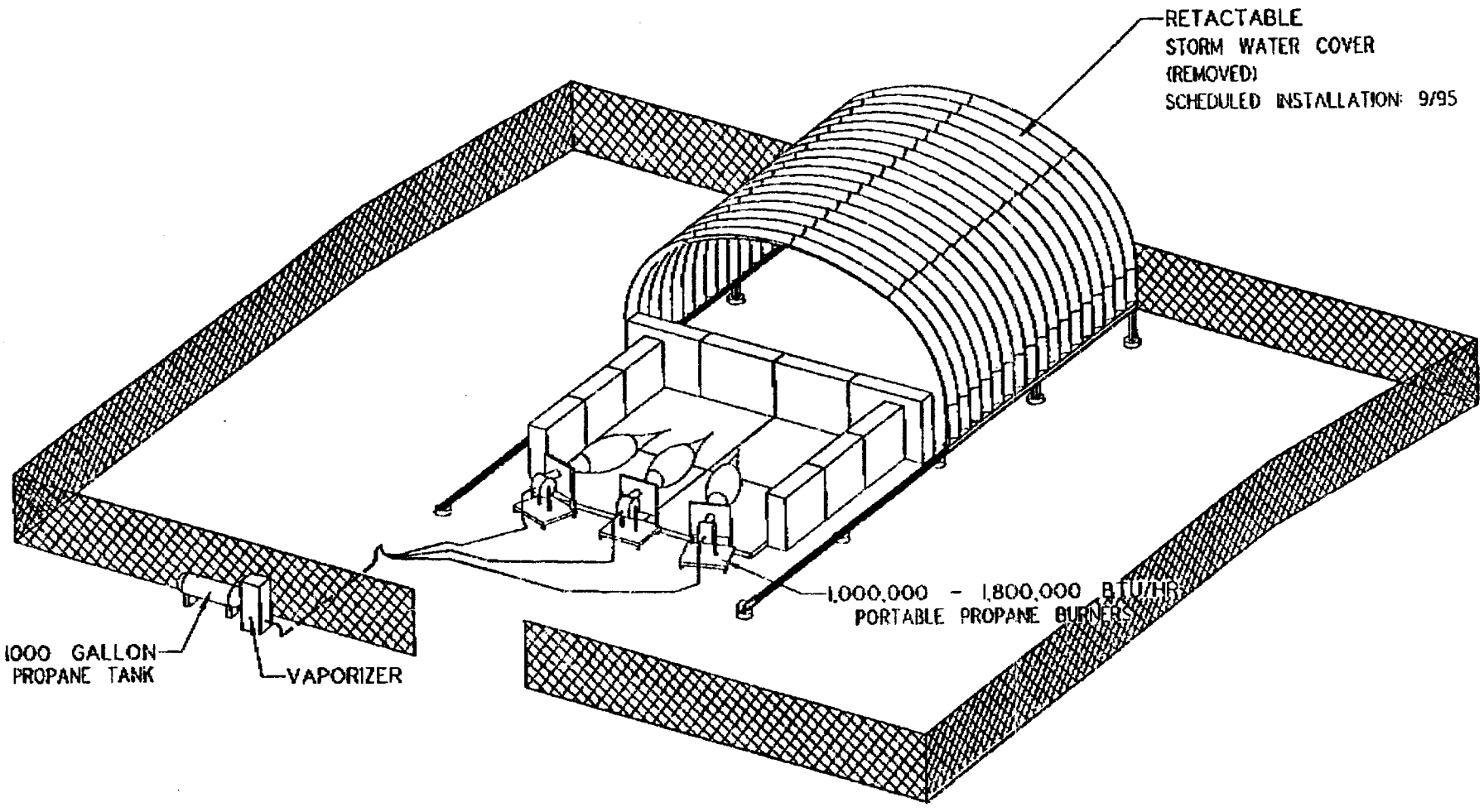

TA-16-387

PROPOSED PROPANE

BURNER INSTALLATION

Figure 1 Schematic and Proposed Modifications to TA-16-387 Flash Pad

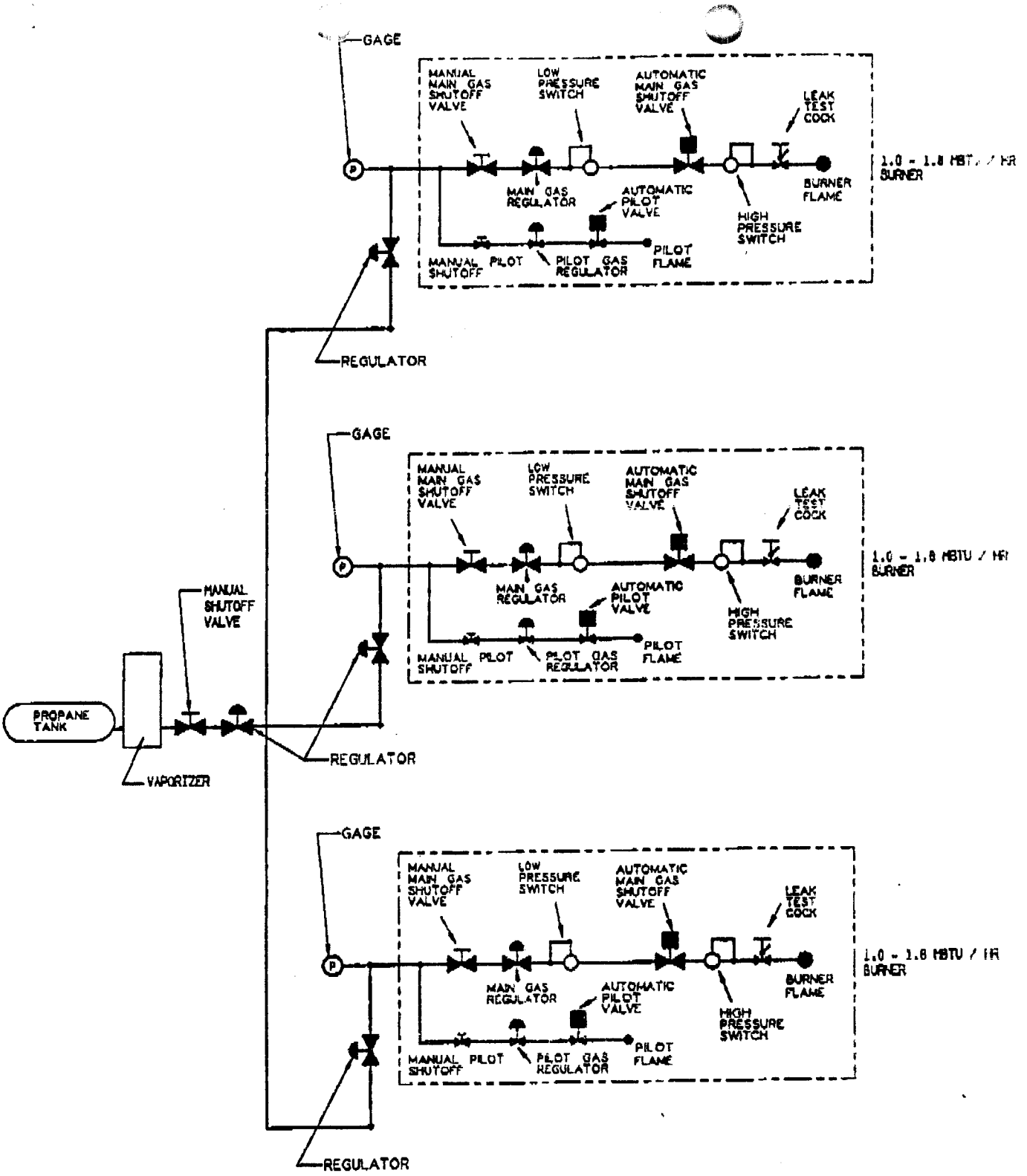

387 FLASH PAD BURNER
PROPANE PIPING

Figure 2 Drawing of Proposed Modifications to TA-16-387 Flash Pad

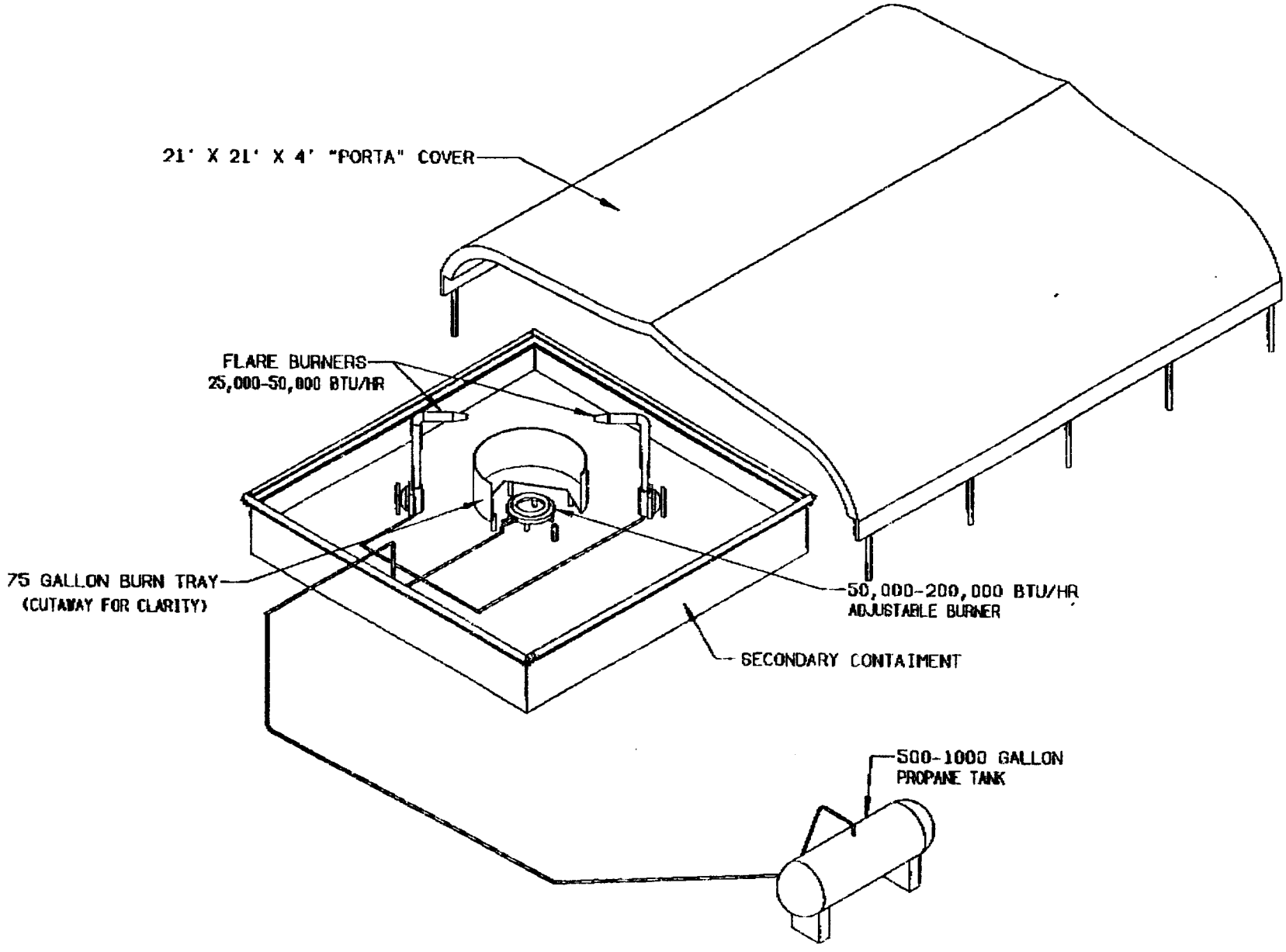

TA-16-394 BURN TRAY
PROPANE BURNER INSTALLATION
& STORMWATER COVER

Figure 3

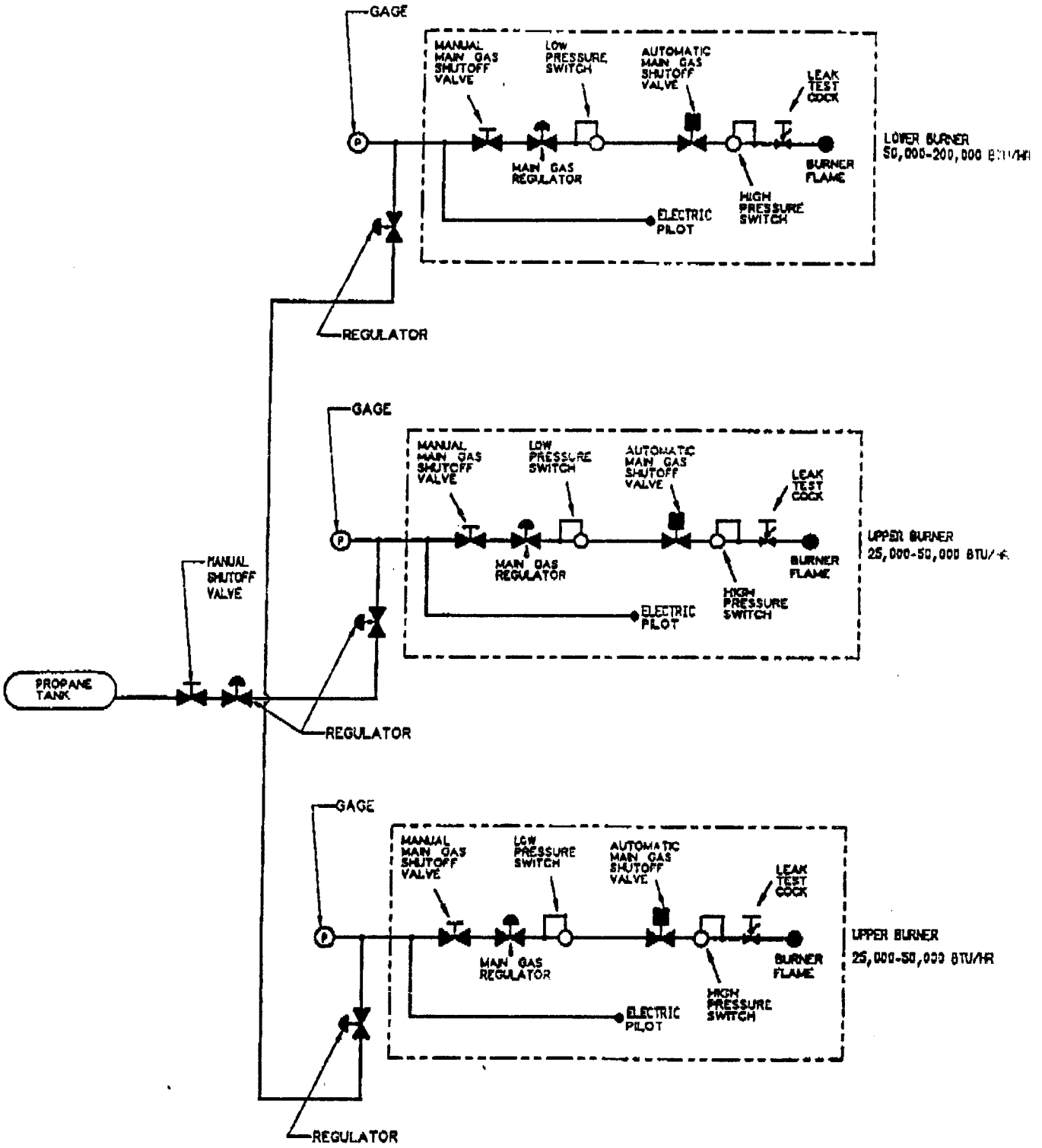

Figure 4

394 BURN TRAY
PROPANE PIPING

Drawing of Proposed Modifications to TA-16-394 Burn Tray