Barbara
Ron C

Department of Energy
Albuquerque Operations Office
Los Alamos Area Office
Los Alamos, New Mexico 87544

APR 1 0 1996

RECEIVED
APR 1996

Mr. Benito Garcia, Bureau Chief
Hazardous and Radioactive Materials Bureau
New Mexico Environment Department
2044 Galisteo St., Bldg. A
P. O. Box 26110
Santa Fe, NM 87505

Dear Mr. Garcia:

Subject: Submittal of the Page Changeout Package for the Technical Area (TA) 16 Open Burn Unit RCRA Part B Application

Enclosed is the above-referenced page changeout package. The application was originally submitted in June 1995. A strategy to relocate flash operations and oil/solvent burn operations to TA-16-388 was agreed upon as a result of negotiations with the New Mexico Environment Department (NMED) concerning this application and an application for closure of Materials Disposal Area P at TA-16. The page changeout package reflects those changes to the RCRA Part B application, and is specific to information pertaining to the relocation and subsequent operations. This submittal is in response to a request made by NMED at a meeting in December 1995.

Two copies of the package are enclosed. One copy contains "red-lined strikeout" to show what changes were made. The second copy is a clean copy of the text after the changes were incorporated.

Should you have any questions, please contact Jody Plum, Office of Environment and Projects, at (505) 665-5042.

Sincerely,

for Larry Kirkman, P. E.
Acting Area Manager

LAAMEP:7CF-005

Enclosure (2)

6000

LIBRARY COPY

RCRA Part B Permit Application
Volume I

Technical Area 16

Building 88, Container Storage Area
Flash Pads 387 and 388, Open Burn Units
Burn Pads 388 and 399, Open Burn Units
Burn Trays 388 and 394, Open Burn Units
Filter Vessels 401 and 406, Open Burn Units

Prepared by:
Los Alamos National Laboratory
Hazardous and Solid Waste Group (ESH-19)
Los Alamos, New Mexico 87545

June 1995
Revised April 1996

LANL
TA-16/

TABLE OF CONTENTS
(Continued)

3b.3.4 Sampling and Analysis of Ash Generated by OB 3b-10
3b.4 SPECIAL PROCEDURAL REQUIREMENTS 3b-10
3b.4.1 Procedures for Ignitable, Reactive, and Incompatible Wastes [20 NMAC 4.1, Subpart V, 264.17] 3b-10
3b.4.2 Procedures to Ensure Compliance with LDR Requirements [20 NMAC 4.1, Subpart VIII, 268.7(a) and 268.7(b)(3), (4), and (5)] 3b-10

4.0 WASTE MANAGEMENT PRACTICES 4-1
4.1 TA-16-88 CONTAINER STORAGE AREA 4-1
4.2 CURRENT MANAGEMENT PRACTICES FOR THE OPEN BURN UNITS 4-1
4.2.1 Off-Normal Waste Generation 4-4
4.3 TA-16-387 AND -388 FLASH PADS TREATMENT OPERATIONS 4-4
4.4 TA-16-388 AND -399 BURN PADS 4-6
4.5 TA-16-394 AND -388 BURN TRAYS TREATMENT OPERATIONS 4-7
4.6 TA-16-401 AND -406 FILTER VESSELS TREATMENT OPERATIONS 4-8
4.7 EXPOSURE INFORMATION 4-9
4.7.1 General (LANL Air Quality) 4-10
4.7.1.1 Emissions from Operations at TA-16 4-11
4.7.1.2 Air Pathways and Off-site Impacts 4-11
4.7.2 Surface Water Pathways 4-11
4.7.3 Groundwater Pathways 4-13
4.7.4 Foodchain Contamination 4-14
4.7.5 Description of SWMUs 4-14

5.0 PROCEDURES TO PREVENT HAZARDS 5-1
5.1 TECHNICAL AREA (TA)-16 SECURITY [20 NMAC 4.1, Subpart IX, 270.14 (b)(4) and 20 NMAC 4.1, Subpart V, 264.14] 5-1
5.2 PREPAREDNESS AND PREVENTION REQUIREMENTS [20 NMAC 4.1 Subpart V, 264.14 (c)] 5-2
5.3 PREVENTIVE PROCEDURES, STRUCTURES, AND EQUIPMENT [20 NMAC 4.1, Subpart V, 264.32 and 20 NMAC 4.1, Subpart IX, 270.14(b)(8)] 5-2
5.3.1 Emergency Equipment at TA-16-88 Available for Use at the Hazardous and Mixed Waste Container Storage Area 5-3
5.3.2 Emergency Equipment Available at the TA-16 Burn Ground 5-4
5.4 PREVENTION OF ACCIDENTAL IGNITION OR REACTION OF IGNITABLE, REACTIVE, OR INCOMPATIBLE WASTE [20 NMAC 4.1, Subpart V, 264.17 and 20 NMAC 4.1, Subpart IX, 270.14(b)(9)] 5-5
5.5 SUPPORT AGREEMENTS WITH OUTSIDE AGENCIES [20 NMAC 4.1, Subpart V, 264.37(a)] 5-5
5.6 VOLATILE ORGANIC AIR EMISSION STANDARDS 5-6

6.0 INSPECTION PLAN 6-1
6.1 GENERAL INSPECTION SCHEDULES AND REQUIREMENTS [20 NMAC 4.1, Subpart IX, 270.14(b)(5); 20 NMAC 4.1, Subpart V, 264.15(a), (b), and (c)] 6-1

TABLE OF CONTENTS
(Continued)

7.2.2.3 Additional Communication Systems 7-8
7.3 CONTINGENCY PLAN IMPLEMENTATION [20 NMAC 4.1, Subpart V, 264.56] 7-9
7.3.1 Guidelines For Implementation [20 NMAC 4.1, Subpart V, 264.51(b) and 264.56] 7-9
7.3.2 Emergency Notification [20 NMAC 4.1, Subpart V, 264.56(a) and (b)] 7-10
7.3.3 Emergency Manager Actions [20 NMAC 4.1, Subpart V, 264.56 (b-h)] 7-10
7.4 SPILLS [20 NMAC 4.1, Subpart V, 264.56(e)] 7-12
7.4.1 Spill Control Procedures 7-13
7.4.2 Decontamination Verification 7-13
7.5 EXPLOSION 7-15
7.6 FIRE 7-15
7.7 UNPLANNED NONSUDDEN RELEASES 7-16
7.7.1 Responsibility 7-16
7.7.2 Nonsudden Releases 7-16
7.7.3 Nonsudden Release Surveillance 7-17
7.8 EXPOSURE TO HAZARDOUS AND MIXED WASTE 7-17
7.9 EVACUATION [20 NMAC 4.1, Subpart V, 264.52(f)] 7-18
7.9.1 Emergency Process Shutdown Prior To Evacuation 7-18
7.9.2 Evacuation Plan 7-18
7.10 SALVAGE AND CLEANUP [20 NMAC 4.1, Subpart V, 264.56(g) and (h)] 7-19
7.11 POST-EMERGENCY ASSESSMENT 7-20
7.12 EMERGENCY RESPONSE RECORDS AND REPORTS [20 NMAC 4.1, Subpart V, 264.56(j)] 7-20
7.13 CONTINGENCY PLAN AMENDMENT [20 NMAC 4.1, Subpart V, 264.54] 7-21

8.0 PERSONNEL TRAINING 8-1
8.1 HAZARDOUS AND MIXED WASTE MANAGEMENT RESPONSIBILITIES 8-1
8.2 TRAINING CONTENT, FREQUENCY, AND TECHNIQUES [20 NMAC 4.1, Subpart IX, 270.14(b)(12); 20 NMAC 4.1, Subpart V, 264.16 (a), (b), and (d)] 8-2
8.2.1 LANL-Wide Training 8-3
8.2.2 Facility-Specific Training 8-3
8.2.3 On-the-Job Training 8-4
8.2.4 Training Coordinator [20 NMAC 4.1, Subpart V, 264.16(a)(2)] 8-4
8.3 EMERGENCY TRAINING [20 NMAC 4.1, Subpart V, 264.16(a)(3) and (c)] 8-4
8.4 IMPLEMENTATION OF TRAINING PROGRAMS 8-5

9.0 CLOSURE PLAN 9-1
9.1 GENERAL CLOSURE INFORMATION 9-2
9.1.1 Closure Performance Standard [20 NMAC 4.1, Subpart V, 264.111] 9-2
9.1.2 Partial and Final Closure Activities [20 NMAC 4.1, Subpart V, 264.112(d)] 9-3
9.1.3 Closure Schedule [20 NMAC 4.1, Subpart V, 264.112(b)(6) and 264.113] 9-3
9.1.4 Amendment of the Closure Plan [20 NMAC 4.1, Subpart V, 264.112(c)] 9-3

TABLE OF CONTENTS
(Continued)

9.1.5 Financial and Liability Requirements [20 NMAC 4.1, Subpart V, 264.140(c)] 9-4
9.1.6 Closure Certification [20 NMAC 4.1, Subpart V, 264.115] 9-4
9.1.7 Security 9-4
9.1.8 Quality Assurance/Quality Control 9-5
9.1.9 Closure Report 9-5
9.1.10 Survey Plat and Post-Closure Requirements [20 NMAC 4.1, Subpart V, 264.116, 264.117 through 264.120] 9-5
9.2 CLOSURE PROCEDURES FOR THE CONTAINER STORAGE AREA LOCATED AT TA-16-88 [20 NMAC 4.1, Subpart V, 264.112] 9-6
9.2.1 Estimate of Maximum Waste in Storage 9-6
9.2.2 Description of Waste 9-6
9.2.3 Removal of Waste 9-6
9.2.4 Closure Procedures and Decontamination 9-6
9.2.5 Decontamination Equipment 9-8
9.2.6 Decontamination Verification 9-8
9.3 CLOSURE PROCEDURES FOR THE OPEN BURN UNITS AT TA-16 (TA-16-387, -388, -394, -399, -401, and -406) [20 NMAC 4.1, Subpart V, 264.112] 9-10
9.3.1 Estimate of Maximum Waste in Storage 9-11
9.3.2 Description of Waste 9-11
9.3.3 Removal of Waste 9-12
9.3.4 Closure Procedures and Decontamination 9-12
9.3.5 Decontamination Equipment 9-13
9.3.6 Decontamination Verification 9-14
9.4 SAMPLING AND ANALYTICAL PROCEDURES [20 NMAC 4.1, Subpart V, 264.112(b)(4)] 9-15
9.4.1 Soil, Ash, and Sand Sampling 9-15
9.4.1.1 Sampling Procedures 9-15
9.4.1.2 Cleaning of Samplers 9-16
9.4.2 Liquid Sampling 9-16
9.4.2.1 Sampling Procedure 9-17
9.4.2.2 Cleaning of Samplers 9-18
9.4.3 Sample Handling and Documentation 9-18
9.4.4 Analytical Procedures 9-20
9.4.5 Field and Laboratory QA/QC 9-20

10.0 CORRECTIVE ACTION FOR SOLID WASTE MANAGEMENT UNITS 10-1
10.1 SWMU DESCRIPTIONS 10-1
10.1.1 Open Burn/Open Flash Units 10-1
10.1.2 Filter Beds/Filter Vessels 10-2
10.1.3 Storage Areas 10-3
10.1.4 Contaminated Soils 10-3
10.1.5 Septic Tank 10-4
10.1.6 Basket Wash Facility and Associated Structures 10-4
10.1.7 Surface Impoundment 10-5

TABLE OF CONTENTS
(Continued)

10.1.8 Disposal Area 10-5
10.1.9 Filter/Treatment Unit 10-5
10.1.10 Drainage System/Outfall 10-5
10.2 RELEASES 10-5
10.2.1 Corrective Actions 10-6

11.0 OTHER FEDERAL LAWS 11-1

12.0 CERTIFICATION 12-1

13.0 LIST OF REFERENCES 13-1

APPENDIX A Determination of 100-Year Floodplain Elevations at Los Alamos National Laboratory

APPENDIX B 1991 and 1992 Traffic Studies at Intersection of Diamond Drive and Trinity Drive

APPENDIX C Emergency Response Standard Operating Procedures

APPENDIX D Standard Operating Procedures for General Handling and Disposal of HE Contaminated Waste

APPENDIX E Standard Operating Procedures for Flashing and Disposal of Unburnable Materials and Disposal of HE Pieces Weighing Over 25 Kilograms

APPENDIX F Standard Operating Procedure for Collection and Drying of Explosives Waste from Settling Tanks

APPENDIX G Standard Operating Procedure for Disposal of HE-Contaminated Solvents and Oils

APPENDIX H Standard Operating Procedure for Operation of the Wastewater Treatment Facility TA-16-363

APPENDIX I Standard Operating Procedure for Loading Pits with Dry Explosive Scrap

APPENDIX J Transportation Procedures and Procedures for the Cleaning of HE Transportation Vehicles and Equipment

APPENDIX K Contract Between the U.S. Department of Energy and the Incorporated County of Los Alamos

APPENDIX L Memorandum of Understanding Between the U. S. Department of Energy and the Incorporated County of Los Alamos for Mutual Aid Assistance

APPENDIX M Planning Agreement Between the U. S. Department of Energy Los Alamos Area Office and the Los Alamos Medical Center

LIST OF FIGURES
(Continued)

4-2	Floor Plan for Technical Area (TA) 16, Building 88
4-3	Technical Area (TA) 16 Burn Ground Site Plan and Areas of Waste Collection
4-4	Schematic Drawing of and Proposed Modifications to the TA-16-387 Flash Pad
4-5	Piping and Instrumentation Diagram for the TA-16-387 Flash Pad
4-6	Schematic Drawing of the Planned TA-16-388 Flash Pad
4-7	Piping and Instrumentation Diagram for the Planned TA-16-388 Flash Pad
4-8	Schematic Drawing of the TA-16-388 and TA-16-399 Burn Pads
4-9	Schematic Drawing of the TA-16-394 Burn Tray
4-10	Schematic Drawing of the Planned TA-16-388 Burn Tray
4-11	Piping and Instrumentation Diagram for the Planned TA-16-388 Burn Tray
4-12	Schematic Drawing of the Planned TA-16-388 Flash Pad/Burn Tray
4-13	Schematic Drawing of the TA-16-401 and TA-16-406 Filter Vessels
5-1	Location Map Showing Security Fence, Entry Station, and Entry Gates in the Vicinity of Technical Area (TA) 16, Building 88
5-2	Location Map Showing Security Fence, Entry Station, and Entry Gates in the Vicinity of the Technical Area (TA) 16 Burn Ground
7-1	Hazardous and Mixed Waste Emergency Notification Structure
7-2	Emergency Facilities
7-3	Evacuation Routes and Muster Area at Technical Area (TA) 16, Building 88, Container Storage Area
7-4	Evacuation Routes and Assembly/Muster Areas at Technical Area (TA) 16 Burn Ground
9-1	Technical Area Where Hazardous and/or Mixed Waste Units Addressed in the Closure Plan are Located
9-2	Site Location Plan for Technical Area (TA) 16, Building 88, Container Storage Area
9-3	Technical Area 16, Building 88, Container Storage Area
9-4	Simplified Schematic of Burn Ground at Technical Area (TA) 16

LIST OF ABBREVIATIONS/ACRONYMS
(Continued)

QA	quality assurance
QAPP	quality assurance program plan
QC	quality control
RCRA	Resource Conservation and Recovery Act
RDX	cyclonite
RFI	RCRA Facility Investigation
SM-409	ESH-2's Central Medical Facility
SO_2	sulfur dioxide
SOP	standard operating procedure
SW-846	EPA's "Test Methods for Evaluating Solid Waste, Physical/Chemical Methods"
SWMU	solid waste management unit
TA	technical area
TATB	triaminotrinitrobenzene
TNT	trinitrotoluene
TSD	treatment, storage, or disposal
UCC	Utilities Control Center
VOC	volatile organic compound
WAP	Waste Analysis Plan
WPF	Waste Profile Form
yd^3	cubic yard

1.0 INTRODUCTION AND REVISED PART A PERMIT APPLICATION

This permit application is submitted to the New Mexico Environment Department (NMED) and to the U.S. Environmental Protection Agency (EPA), Region 6, to meet the requirements of the Resource Conservation and Recovery Act (RCRA), the New Mexico Hazardous Waste Act, and implementing regulations.

This Part B permit application addresses the following waste units at Los Alamos National Laboratory (LANL):

- Two flash pads, designated TA-16-387 and TA-16-388, for burning high explosives (HE)-contaminated equipment/materials. Flash Pad 387 will undergo closure following closure activities at Material Disposal Area P and approval of Flash Pad 388 operations.
- Two burn pads, designated TA-16-388 and TA-16-399, for burning HE solids. LANL plans to convert the TA-16-388 burn pad to a flash pad/burn tray area.
- Two burn trays, designated TA-16-388 and TA-16-394, for burning HE-contaminated oil/solvent mixtures. LANL plans to move the operations at burn tray TA-16-394 to the flash pad/burn tray area at TA-16-388. Burn Tray 394 will undergo closure after operations there are relocated to TA-16-388 and Burn Tray 388 is approved for use.
- Two filter vessels, designated TA-16-401 and TA-16-406, for burning HE-contaminated sludges.
- One container storage area at Building 88, designated TA-16-88, for storage of hazardous and low-level mixed waste.

The content of the Part B permit application follows the guidance provided in "RCRA Part B Permit Writers Guidance Manual for Department of Defense Open Burning/Detonation Units" (U.S. Army Environmental Hygiene Agency [AEHA], 1987). An outline of the permit application with the citations of the regulations covered by each section is shown in Table 1-1.

LANL is also including a revised Part A permit application for hazardous and mixed waste pursuant to the New Mexico Administrative Code, Title 20, Chapter 4, Part 1 (20 NMAC 4.1), Subpart IX, 270.72 and guidance from the Radioactive and Hazardous Waste Bureau. This revised Part A permit application includes all of the general facility information that is required in a Part A permit application; however, the only unit-specific information is for the hazardous and mixed waste treatment and storage units at TA-16, listed above. These units were previously identified in LANL's "RCRA Part A Permit Application for Mixed Waste", January 1991 (LANL, 1991) and LANL's "RCRA Part B Permit Application", Revision 4.1, November

Table 1-1
Regulatory References and
Corresponding Permit Application Location

RCRA[a] Regulatory Reference 20 NMAC 4.1[b] Subpart IX (40 CFR, Part 270)	20 NMAC 4.1, Subpart V (40 CFR, Part 264)	Description of Requirement	Location in Permit Application
270.10(a)	--	Permit application	1.0
270.10(g)(1)	--	Updating permit applications	1.0
270.11(a)	--	Signatories	12.0
270.11(d)	--	Certification	12.0
270.13	--	Contents of Part A permit application	Part A
270.13(a)	--	Activities conducted	Part A
270.13(b)	--	Name, mailing address, and location	Part A
270.13(c)	--	Principal SIC codes	Part A
270.13(d)	--	Operator information	Part A
270.13(e)	--	Owner information	Part A
270.13(f)	--	Whether located on Indian land	Part A
270.13(g)	--	New or existing facility	Part A
270.13(h)	--	Scale drawing and photographs	Part A
270.13(I)	--	Description of waste processes	Part A
270.13(j)	--	Specification, quantity hazardous waste	Part A
270.13(k)	--	List of permits and construction approved	Part A
270.13(l)	--	Topographic maps	Part A
270.13(m)	--	Description of nature of business	Part A
270.14(b)(1)	--	General facility description	2.0
270.14(b)(2)	264.13(a)	Chemical and physical analyses	3.0
270.14(b)(3)	264.13(b)	Waste analysis plan	3.0
	264.13(b)	Parameters and rationale	3.0
	264.13(b)	Test methods	3.0
	264.13(b)	Sampling methods	3.0
	264.13(b)	Frequency of analyses	3.0
270.14(b)(4)	264.14	Security procedures and equipment	5.1
270.14(b)(5)	264.15(b)	Inspection requirements	6.0
270.14(d)(1)(v)	--	Waste types managed at SWMU	10.1 and Attachment 10-1
270.15	264 Subpart I	Containers	4.1
270.15(a)	264.175	Containment system	4.1

Refer to footnotes at end of table

Table 1-1 (Continued)
Regulatory References and
Corresponding Permit Application Location

RCRA[a] Regulatory Reference 20 NMAC 4.1[b] Subpart IX (40 CFR, Part 270)	20 NMAC 4.1, Subpart V (40 CFR, Part 264)	Description of Requirement	Location in Permit Application
270.15(b)	264.175(c)	Free liquids	4.1 and 4.2
270.15(c)	264.176	Ignitable or reactive wastes	4.1, 4.2, and 5.4
270.15(d)	264.177	Incompatible wastes	4.1, 4.2, and 5.4
270. 23	264 Subpart X	Miscellaneous units	4.0
270.23(a)	--	Detailed unit description	4.1, 4.3 - 4.6
270.23(b)	264.601	Hydrologic, geologic, and meteorologic assessments	2.0 and 4.7
270.23(c)	264.601	Potential exposure pathways	4.7
270.23(d)	--	Demonstration of treatment effectiveness	4.0
	264 Subpart CC	Air emissions control standards for tanks, containers, and surface impoundments	5.6

[a] Resource Conservation and Recovery Act.
[b] The New Mexico Administrative Code, Title 20, Chapter 4, Part 1 (20 NMAC 4.1), adopts with a few limited exceptions, Title 40 of the Code of Federal Regulations (40 CFR), Parts 260-266, Part 268, and Part 270 (1993). 20 NMAC 4.1, Subparts V and IX, contain equivalent regulations to 40 CFR Parts 264 and 270, respectively.

Please print or type with ELITE type (12 characters per inch) in the unshaded areas only.

EPA I.D. Number (from page 1)	Secondary ID Number (enter from page 1)
N M 0 8 9 0 0 1 0 5 1 5	

XII. Process Design Capacities (continued)

[illegible] in the numbers X-1 and X-2 below: A facility has two storage tanks, one tank can [illegible] gallons. The facility also has an incinerator that can burn up to 20 gallons per hour.

	B. PROCESS DESIGN CAPACITY		C. PROCESS TOTAL NUMBER OF UNITS	FOR OFFICIAL USE ONLY
	1. AMOUNT (specify)	2. UNIT OF MEASURE (enter code)		
	600	G	0 0 2	
	20	E	0 0 1	
S 0 1	275	G	0 0 1	

If [illegible] to list more than 12 process codes, attach an additional sheet(s) with the information in the same format as [illegible] the lines sequentially, taking into account any lines that will be used for additional treatment processes in Item XIII.

XIII. Additional Treatment Processes (follow instructions from Item XII)

Line Number (enter numbers in sequence with Item XII)	A. PROCESS CODE	B. TREATMENT PROCESS DESIGN CAPACITY 1. AMOUNT (specify)	2. UNIT OF MEASURE (enter code)	C. PROCESS TOTAL NUMBER OF UNITS	D. DESCRIPTION OF PROCESS
0 2	T 0 4	40,000	See Att.	0 0 2	See Attachment 1 to this Part A.
0 3	T 0 4	1,000	J	0 0 2	See Attachment 1 to this Part A.
0 4	T 0 4	250/100	E	0 0 2	See Attachment 1 to this Part A.
0 5	T 0 4	1,000	J	0 0 2	See Attachment 1 to this Part A.

Please print or type with ELITE type (12 characters per inch) in the unshaded areas only

Form Approved. OMB No. 2050-0034 Expires 12-31-91
GSA No. 0246-EPA-CT

EPA I.D. Number (enter from page 1)	Secondary ID Number (enter from page 1)
N M 0 8 9 0 0 1 0 5 1 5	

XIV. Description of Hazardous Waste (continued)

E. USE THIS SPACE TO LIST ADDITIONAL PROCESS CODES FROM ITEM D(1) ON PAGE 6.

Line Number	Additional Process Codes (enter)

XV. Map

Attach to this application a topographic map of the area extending to at least one mile beyond property boundaries. The map must show the outline of the facility, the location of each of its existing and proposed intake and discharge structures, each of its hazardous waste treatment, storage, or disposal facilities, and each well where it injects fluids underground. Include all springs, rivers and other surface water bodies in this map area. See instructions for precise requirements.

XVI. Facility Drawing

All existing facilities must include a scale drawing of the facility (see instructions for more detail).

XVII. Photographs

All existing facilities must include photographs (aerial or ground-level) that clearly delineate all existing structures; existing storage, treatment and disposal areas; and sites of future storage, treatment or disposal areas (see instructions for more detail).

XVIII. Certification(s)

I certify under penalty of law that this document and all attachments were prepared under my direction or supervision in accordance with a system designed to assure that qualified personnel properly gather and evaluate the information submitted. Based on my inquiry of the person or persons who manage the system, or those persons directly responsible for gathering the information, the information submitted is, to be the best of my knowledge and belief, true, accurate, and complete. I am aware that there are significant penalties for submitting false information, including the possibility of fine and imprisonment for knowing violations.

Owner Signature: [signature] Date Signed: 4/19/96

Name and Official Title (type or print)
Larry D. Kirkman, Acting Area Manager for DOE LAAO

Operator Signature: [signature] Date Signed: 4/19/96 / 4/9/96

Name and Official Title (type or print)
Larry D. Kirkman, Acting Area Manager DOE LAAO / Dennis J. Erickson, Division Director, LANL ESH Div.

XIX. Comments

*All entries with an asterisk in Section XIV Part D are typically generated in volume much less than 500 lbs.

Note: All EPA Hazardous Waste Numbers designated for T04 treatment also contain a D003 component.

Note: Mail completed form to the appropriate EPA Regional or State Office. (refer to instructions for more information)

ATTACHMENT 1

EXPLANATION OF PROCESS CODE LISTINGS AND DESIGN CAPACITIES FOR HAZARDOUS AND MIXED WASTE UNITS

EXPLANATION OF PROCESS CODE LISTINGS AND DESIGN CAPACITIES FOR HAZARDOUS AND MIXED WASTE UNITS[a]

Description	Capacity	SWMU[b] No.	Associated Structure No./Area
Line 1 S01 Container Storage[c]			
Container storage area	275 gallons	16-012(a2)	Technical Area 16, Building 88 (TA-16-88)
Line 2 T04 Treatment - Open Burning			
Flash Pads 387[d] and 388 (two flash pads for burning potentially high explosives [HE]-contaminated equipment/materials)	40,000 pounds[e] (of waste per burn) at each unit	16-010(b)	TA-16-387 TA-16-388
Line 3 T04 Treatment - Open Burning			
Burn Pads 388[f] and 399 (two burn pads for burning HE solids)	1,000 pounds (of waste per burn) at each unit	16-010(c) 16-010(d)	TA-16-388 TA-16-399
Line 4 T04 Treatment - Open Burning			
Burn Tray 388 (one burn tray for burning HE-contaminated oil/ solvent mixtures)	100 gallons (of waste per burn)	To be determined	TA-16-388
Burn Tray 394 (one burn tray for burning HE-contaminated oil/solvent mixtures)	250 gallons (of waste per burn)	16-010(j)	TA-16-394
Line 5 T04 Treatment - Open Burning			
Filter Vessels 401 and 406 (two filter vessels for burning HE-contaminated sludges)	1,000 pounds (of waste per burn) at each unit	16-010(e) 16-010(f)	TA-16-401 TA-16-406

Explanation of Symbols/Abbreviations

a EPA Hazardous Waste Numbers for wastes that may be managed at the units are listed in the following table.

b SWMU = solid waste management unit.

c "Line 1 S01 Container Storage" refers to the total amount of container storage for hazardous and mixed waste at Technical Area (TA) 16, provided in Section XII, page 4 of 7, of this Part A permit application. For information on locations and capacities of other container storage areas for hazardous and mixed waste at Los Alamos National Laboratory (LANL), refer to Section 1.0 (i.e., the Part A Permit Application) of Revision 4.1 of LANL's Part B Permit Application for Hazardous Waste, November 1988 and to LANL's "RCRA Part A Permit Application for Mixed Waste," Rev. 2.0, September 1994.

d Flash Pad 387 will be used to treat wastes from Material Disposal Area (MDA) P only and will undergo closure following closure activities at MDA P and approval of Flash Pad 388 operations.

e This amount is the estimated maximum weight of equipment or structures (with HE surface contamination only) that may be burned at a flash pad at one time.

EXPLANATION OF PROCESS CODE LISTINGS AND DESIGN CAPACITIES FOR HAZARDOUS AND MIXED WASTE UNITS[a] (Continued)

[f] LANL plans to convert Burn Pad 388 to a flash pad/burn tray area. Upon conversion, wastes formerly treated at Flash Pad 387 (other than MDA P wastes) and Burn Tray 394 will be treated at TA-16-388. Burn Tray 394 will undergo closure after operations there are relocated to Burn Tray 388 and Burn Tray 388 is approved for use.

EPA HAZARDOUS WASTE NUMBERS AND ASSOCIATED UNITS MANAGING WASTE
(Page 1 of 4)

EPA Hazardous Waste Number	Process Code	Unit(s) Managing Waste
D001	S01	TA-16-88
	T04	TA-16-387
	T04	TA-16-388
	T04	TA-16-394
	T04	TA-16-401
	T04	TA-16-406
D002	T04	TA-16-388
	T04	TA-16-394
D003	S01	TA-16-88
	T04	TA-16-387
	T04	TA-16-388
	T04	TA-16-394
	T04	TA-16-399
	T04	TA-16-401
	T04	TA-16-406
D005	S01	TA-16-88
	T04	TA-16-387
	T04	TA-16-388
	T04	TA-16-394
	T04	TA-16-399
	T04	TA-16-401
	T04	TA-16-406
D006	T04	TA-16-387
	T04	TA-16-388
D007	T04	TA-16-387
	T04	TA-16-388
	T04	TA-16-394
D008	S01	TA-16-88
	T04	TA-16-387
	T04	TA-16-388
D009	S01	TA-16-88
	T04	TA-16-387

EPA HAZARDOUS WASTE NUMBERS AND ASSOCIATED UNITS MANAGING WASTE
(Page 2 of 4)

EPA Hazardous Waste Number	Process Code	Unit(s) Managing Waste
D009 (continued)	T04	TA-16-388
	T04	TA-16-394
D011	T04	TA-16-387
	T04	TA-16-388
D022	T04	TA-16-387
	T04	TA-16-388
	T04	TA-16-394
D028	T04	TA-16-387
	T04	TA-16-388
	T04	TA-16-394
D030	T04	TA-16-387
	T04	TA-16-388
D035	T04	TA-16-387
	T04	TA-16-388
	T04	TA-16-394
D038	T04	TA-16-387
	T04	TA-16-388
	T04	TA-16-394
F001	T04	TA-16-387
	T04	TA-16-388
	T04	TA-16-394
	T04	TA-16-401
	T04	TA-16-406
F002	T04	TA-16-387
	T04	TA-16-388
	T04	TA-16-394
	T04	TA-16-401
	T04	TA-16-406
	T04	TA-16-399
F003	T04	TA-16-387
	T04	TA-16-388
	T04	TA-16-394

EPA HAZARDOUS WASTE NUMBERS AND ASSOCIATED UNITS MANAGING WASTE
(Page 3 of 4)

EPA Hazardous Waste Number	Process Code	Unit(s) Managing Waste
F003 (continued)	T04	TA-16-401
	T04	TA-16-406
F005	T04	TA-16-387
	T04	TA-16-388
	T04	TA-16-394
	T04	TA-16-399
	T04	TA-16-401
	T04	TA-16-406
K044	T04	TA-16-401
	T04	TA-16-406
K045	T04	TA-16-387
	T04	TA-16-388
K047	T04	TA-16-401
	T04	TA-16-406
P009	T04	See note at end of this table.
P065	T04	See note at end of this table.
P081	T04	See note at end of this table.
P112	T04	See note at end of this table.
U003	T04	See note at end of this table.
U044	T04	See note at end of this table.
U056	T04	See note at end of this table.
U069	T04	See note at end of this table.
U105	T04	See note at end of this table.
U106	T04	See note at end of this table.
U107	T04	See note at end of this table.
U112	T04	See note at end of this table.
U113	T04	See note at end of this table.
U118	T04	See note at end of this table.
U154	T04	See note at end of this table.
U159	T04	See note at end of this table.
U160	T04	See note at end of this table.
U189	T04	See note at end of this table.

EPA HAZARDOUS WASTE NUMBERS AND ASSOCIATED UNITS MANAGING WASTE
(Page 4 of 4)

EPA Hazardous Waste Number	Process Code	Unit(s) Managing Waste
U213	T04	See note at end of this table.
U234	T04	See note at end of this table.

Note:
P- or U-listed hazardous wastes are not expected to be treated at the TA-16 burn ground. However, there is a possibility that leaks/spills or extremely small quantities of off-specification commercial chemical product waste could be generated and subsequently treated at TA-16-388 and TA-16-394 burn trays (for HE-contaminated off-specification commercial chemical products) or TA-16-401 and/or TA-16-406 (for HE-contaminated wash down water).

ATTACHMENT 2

TOPOGRAPHIC MAPS

LIST OF TOPOGRAPHIC MAPS

MAP NO.	MAP TITLE
1	Contour Map Showing All Technical Areas (TA) at Los Alamos National Laboratory (LANL)
2	Contour Map Showing Hazardous and Mixed Waste Units at Technical Area (TA) 16
3	Location Map of Water Supply Wells, Monitoring Wells, Test Wells, Springs, and Surface Water Sampling Stations
4	Los Alamos National Laboratory (LANL) National Pollutant Discharge Elimination System (NPDES) Outfall Locations
5	Location Map of Technical Area (TA) 57, Fenton Hill Geothermal Site

Note: For topographic maps showing LANL's other hazardous and mixed waste units, refer to Section 1.0 of Revision 4.1 of LANL's Part B Permit Application for Hazardous Waste, November 1988 and to LANL's "RCRA Part A Permit Application for Mixed Waste," Rev. 2.0, September 1994.

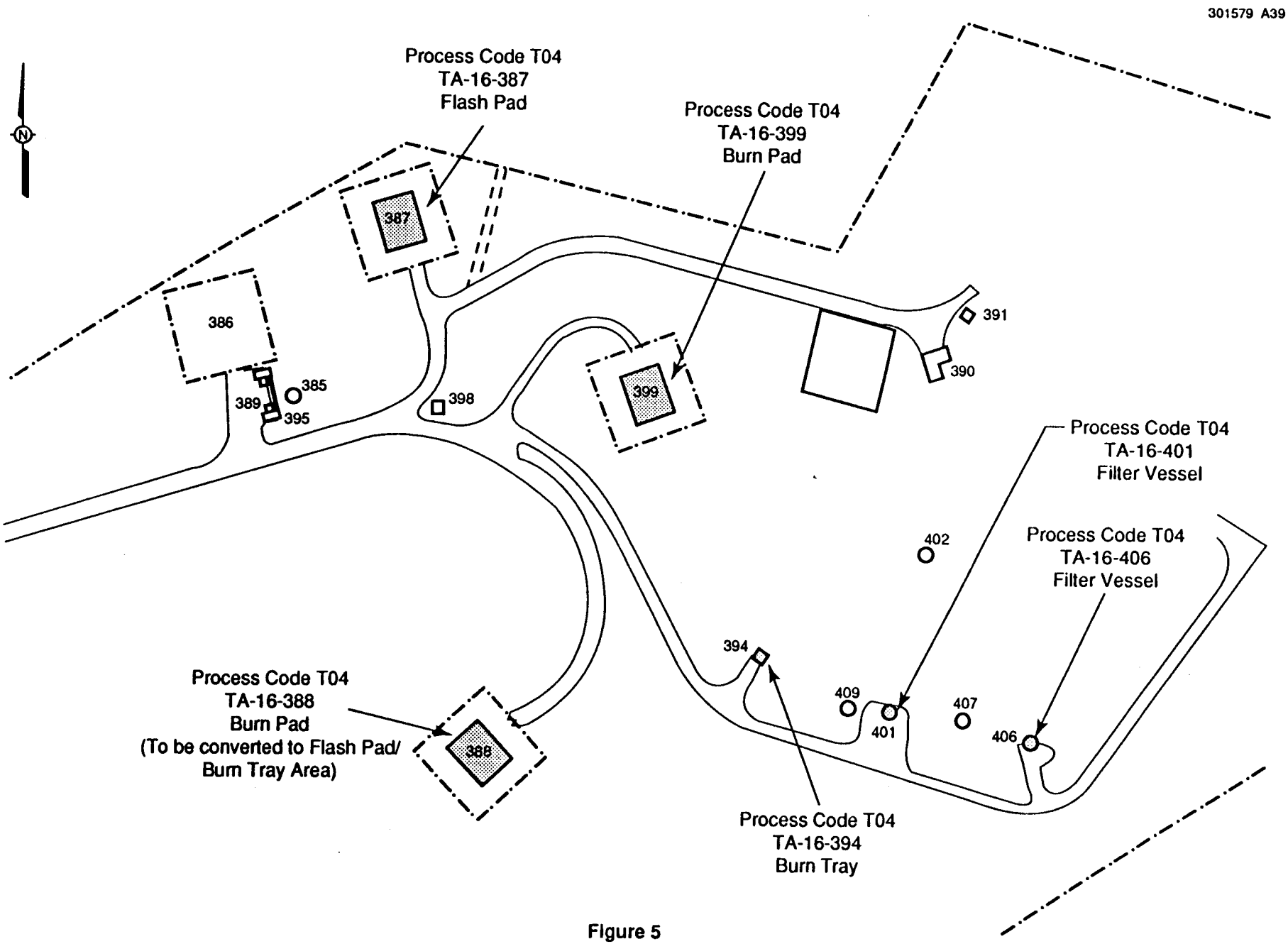

Figure 5
Technical Area (TA) 16 Burn Ground

ATTACHMENT 4

PHOTOGRAPHS

LIST OF PHOTOGRAPHS

PHOTOGRAPH CAPTION — PAGE

TA-16-88, Process Code S01, Container Storage Area 4-1

TA-16-88, Process Code S01, Container Storage Area 4-1

TA-16-387, Process Code T04, Burn Pad for Flashing High Explosives - Contaminated Equipment 4-2

TA-16-387, Process Code T04, Burn Pad for Flashing High Explosives - Contaminated Equipment 4-2

TA-16-388, Process Code T04, Burn Pad 4-3

TA-16-399, Process Code T04, Burn Pad 4-3

TA-16-394, Process Code T04, Burn Pan for High Explosives - Contaminated Oil/Solvents 4-4

TA-16-394, Process Code T04, Burn Pan for High Explosives 4-4

TA-16-401 and TA-16-406, Process Code T04, Filter Vessels for Dried High Explosives Sludge 4-5

TA-16-401 and TA-16-406, Process Code T04, Filter Vessels for Dried High Explosives Sludge 4-6

TA-16-388, Process Code T04, Flash Pad/Burn Tray 4-7

Note: For photographs showing LANL's other hazardous and mixed waste units, refer to Section 1.0 of Revision 4.1 of LANL's Part B Permit Application for Hazardous Waste, October 1988 and to LANL's "RCRA Part A Permit Application for Mixed Waste," Rev. 2.0, September 1994.

Map 2: Contour Map Showing Hazardous and Mixed Waste Units at Technical Area (TA) 16

LEGEND

- Boundary, Los Alamos National Laboratory
- Boundary, TA
- Contours, 10 foot
- Contours, 100 foot
- Fence, Industrial
- Fence, Security
- Solid Waste Management Unit (SWMU) Boundary
- Roads, Dirt
- Roads, Paved
- Road/Trail
- Material Disposal Area
- Former Structure
- Permanent Structure
- Temporary Structure
- Structure with Treatment, Storage, or Disposal (TSD) Area(s)

6000-A

N

State Plane Coordinate System, New Mexico Central Zone.
1983 North American Datum

Grid provides NM State Plane coordinates in feet.
Grid interval, in feet: 5000
Feet per inch on map = 700

SCALE 1:8400

0 213 426 639 852

METERS

0 700 1400 2100 2800

FEET

NOTICE: The information on this map is provisional. Feature locations are dependent on scale and symbology and their accuracy may not have been confirmed. Los Alamos National Laboratory boundary is based on legal description established in 1995. Other boundary, structure, and utility data are from Los Alamos National Laboratory Engineering Division and Los Alamos County Utility and Engineering Departments. Contour data are from Los Alamos National Laboratory Environmental Restoration Project aerial survey, September 1991.

University of California

Los Alamos National Laboratory

Earth and Environmental Sciences Division

FIMAD Facility for Information Management, Analysis, and Display
FIMAD is the electronic data repository for the Environmental Restoration Project at Los Alamos National Laboratory.

Produced by: Marcia Jones

Date: March 20, 1996 FIMAD Plot ID: G104458

FIMAD Plot ID: G104458 20 Mar 96

Photograph to be provided when available

TA-16-388, Process Code T04, Flash Pad/Burn Tray

Units that are operating under interim status facility standards include the following:

- Thermal treatment units for open burning/open detonation of high-explosive (HE) waste at TA-14, TA-15, TA-16, TA-36, and TA-39. One thermal treatment unit, the scrap detonation site at TA-40, is undergoing RCRA closure under interim status. Two thermal treatment units at TA-16 (Flash Pad 387 and Burn Tray 394) will undergo RCRA closure. Flash Pad 387 will undergo closure following closure activities at Material Disposal Area (MDA) P and approval of operations at Flash Pad 388. Burn Tray 394 will undergo closure after operations conducted there are relocated to TA-16-388 and Burn Tray 388 is approved for use.

- Container storage areas and storage tanks for mixed waste located at TA-3, TA-16, TA-21, TA-50, TA-54, and TA-55.

- Surface impoundments for storage of mixed waste at TA-53. These surface impoundments will undergo RCRA closure under interim status.

- Mixed waste treatment units (waste solidification/cementation) at TA-50-1 and TA-55-4.

- An oxygen sparging furnace at TA-55-4 for treatment of mixed waste. This unit will undergo RCRA closure under interim status.

- Container storage areas at the Radioassay and Nondestructive Testing Facility (TA-54-38) at TA-54 West.

- Container storage areas at TA-54, Area G. These units include Storage Domes 48, 49, 153, 224, and 283; the Drum Prep Facility (DPF) (TA-54-33); and Storage Sheds 8, 1027, 1028, 1029, and 1041.

Units that are planned for construction at LANL and for which permit applications/modification requests have been submitted include the following:

- Hazardous and mixed waste treatment and storage units at the Hazardous Waste Treatment Facility, TA-63.

There are one existing and one planned hazardous/mixed waste decontamination areas at LANL. A centralized decontamination area at TA-50 is used for cleanup of equipment associated with hazardous and mixed waste operations. The decontamination area is located in Room 34 in the south wing of Building 1. The area is a high bay that can accommodate equipment of all sizes, including vehicles. A decontamination area will be established at the DPF at TA-54, Area G, during an upgrade of that facility. This area will be used for cleanup of equipment associated with the container retrieval project at TA-54, Area G, and for general site activities. The decontamination area in the DPF will be large enough to accommodate large

earth-moving equipment. The location of an equipment cleanup area at TA-16 is shown on Map 2 of the TA-16 Part A permit application.

For information on the hazardous and mixed waste units listed above, refer to LANL's "RCRA Part A Permit Application for Mixed Waste," Revision 2.0 (LANL, 1994b) and LANL's "RCRA Part B Permit Application," Revision 4.1 (LANL, 1988).

2.1.1 TA-16

TA-16 is located in the southwestern quadrant of LANL. It is bounded on the north by TA-8, TA-9, TA-14 and Cañon de Valle; on the east by TA-11, TA-15, TA-37, and TA-49; on the south by State Road 4 and Bandelier National Monument; and on the west by West Jemez Road and Santa Fe National Forest (see Map 1 of the TA-16 Part A permit application, included as Attachment 1-1 of Section 1.0). Elevation ranges from approximately 7,700 ft at the west end of the TA to approximately 6,800 ft at the lower east end. Topography is varied, ranging from steep precipitous canyon walls to sloping mesa tops.

This permit application includes a container storage area (Building 88) and open burning units at TA-16. The container storage area is for storage and handling of classified waste (Figures 2-3 and 2-4). Four types of open burning units are located at the TA-16 burning ground: two flash pads (TA-16-387 and -388), where HE contamination is or will be removed from excess equipment or scrap, soil, or debris thought to have HE contamination; two burn pads (TA-16-388 and -399) for the destruction of solid HE material; two burn trays located on pads (TA-16-394 and -388), where HE-contaminated solvents and oil are and will be burned; and two filter vessels (TA-16-401 and -406), composed of layers from fine sand to coarse gravel, for filtration of waste HE sludge from wastewater (Figure 2-5). Flash Pad 387 will undergo closure following completion of closure activities at MDA P and approval of operations at Flash Pad 388. Burn Tray 394 will undergo closure after operations conducted there are relocated to TA-16-388 and Burn Tray 388 is approved for use. Specific standard operating procedures (SOP) for HE-contaminated waste handling at the open burn units are provided as examples in Appendices C through J. The maximum storage capacity for TA-16-88 at any given time is 275 gallons (five 55-gallon drums).

A 100-ft square cyclone fence surrounds the flash pad area at TA-16-387. A cyclone fence also surrounds the open burning area at TA-16-388. Concrete blocks are placed on the ground surrounding three sides of the pad and the material to be flashed is placed within the concrete block-lined area with wood fuel to maintain the burn until all HE has been reacted.

The flashed scrap material is then handled as administratively-controlled, nonhazardous waste. Ash and other treatment residue are collected and analyzed to determine if they are hazardous or nonhazardous and are then managed appropriately. Flash Pad 387 will treat ER wastes and then will undergo closure following closure activities at MDA P and approval of Flash Pad 388 operations.

The two burn pads (TA-16-388 and -399), each surrounded by a 100-ft square chain link fence, are used to destroy solid chunks of excess or off-specification HE and machine turnings. The material is placed on a steel table lined with refractory brick and ignited remotely. Burn Pad 388 will be converted to a flash pad/burn tray area and will be used to treat wastes formerly treated at the TA-16-387 flash pad and the TA-16-394 burn tray. Bulk HE will not be treated at Burn Pad 388.

At TA-16-394, used oil and/or solvent, which may be contaminated with HE, is poured into metal trays. The trays are located within a rock-filled concrete tray lined with fire bricks. The material is ignited remotely. Operations at Burn Tray 394 will be relocated to the flash pad/burn tray area at TA-16-388. Burn Tray 394 will undergo closure after operations there are relocated to Burn Tray 388 and Burn Tray 388 is approved for use.

HE-contaminated wastewater is collected in sumps at HE-processing facilities located in several TAs. HE settles out of the wastewater, is collected in a vacuum truck, and is taken to TA-16 for treatment. The collected sludge is gravity fed from the vacuum truck to one of two filter vessels buried in the ground (TA-16-401 and -406). The wastes are separated from the water, dried, and burned in the vessel. Up to 1,000 pounds of sludge can be burned at one time. The vessels contain sand and gravel, and a fluid drain connects the base of the cone-shaped vessel to a carbon-adsorption wastewater treatment unit. Treated effluent is regulated by two National Pollutant Discharge Elimination System (NPDES) permits (NMR00A384 and NM0028355). A complete description of the units and their practices is provided in section 4.0 of this permit application.

2.1.2 Biological Description

Activities with long term impact on the area began in 1742 with sheep grazing and subsistence farming. The dominant trees within the mesa overstory vegetation are ponderosa pine and aspen. The mesa top shrub layer is primarily composed of Gambel oak and New Mexico locust. Dominant forbs and grasses include bluegrass, mountain muhly, blue grama, pine dropseed, wormwood, false tarragon, tall lupine, and cinquefoil.

ZONE	REVISION LETTER	REVISION	DATE	CHANGED BY	CHECKED BY	APPROVED BY

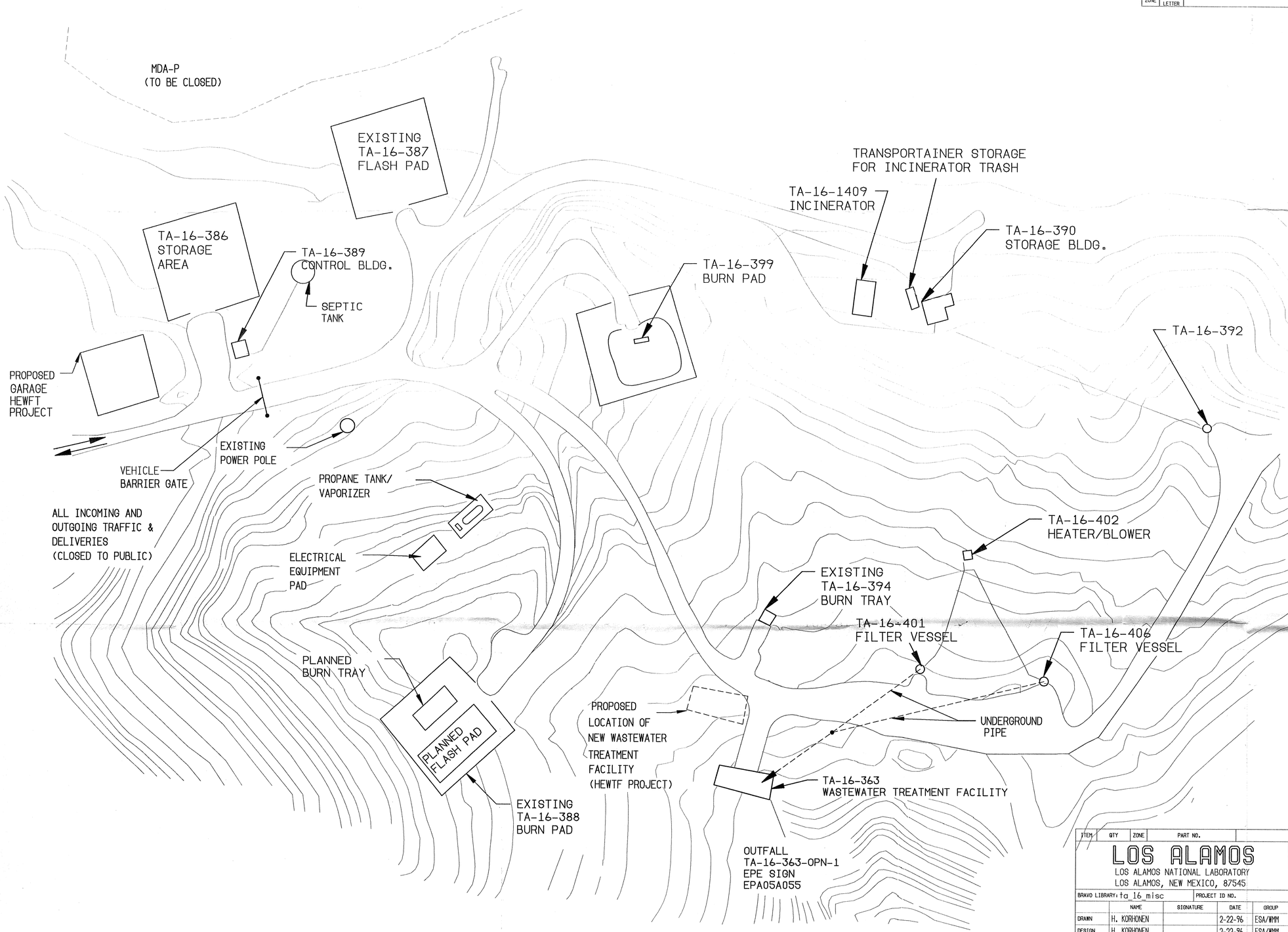

6000-B

Figure 2-5

Location Map of Technical Area (TA) 16
Burn Ground Site and Road Plan

ITEM	QTY	ZONE	PART NO.	DESCRIPTION	SUPPLIED BY

LOS ALAMOS
LOS ALAMOS NATIONAL LABORATORY
LOS ALAMOS, NEW MEXICO, 87545

TOLERANCE (UNLESS OTHERWISE NOTED) X = ± 0.XX = ± ANGULAR =±

CLASS REVIEW: SIGNATURE DATE

BRAVO LIBRARY: ta_16_misc PROJECT ID NO.

	NAME	SIGNATURE	DATE	GROUP
DRAWN	H. KORHONEN		2-22-96	ESA/WMM
DESIGN	H. KORHONEN		2-22-96	ESA/WMM
CHECK	S. BECKMAN		2-22-96	ESA/WMM
ENGINEER	E. HYDE		2-22-96	ESA/WMM
OPERATIONAL REVIEW				
OPERATIONAL APPROVED	-		-	-
OTHER REVIEW	-		-	-
OTHER APPROVED	-		-	-

TITLE

TA-16, BURNGROUND
PROPOSED & EXISTING
OPERATIONS

FSCM NO. 88516 | 13Y-192411 | SHEET 2 OF 2 | REV A

ALL DIMENSIONS ARE IN INCHES | SCALE 1" = 50'

PLOTTED: Thu Mar 7 10:18:24 EST 1996

3b.1.1 Facility Waste-Generating Processes, Activities, and Identification of RCRA Hazardous Wastes Managed

RCRA-hazardous HE waste is generated at LANL primarily from research and development activities, as a result of decontamination and decommissioning, and from environmental restoration (ER) activities. Table 3b-1 provides a summary of available information on RCRA-hazardous HE waste treated by OB at LANL, including brief waste descriptions, waste-generating processes, generating locations, the characterization basis for hazardous waste designation (i.e., process knowledge and/or analysis), potential EPA Hazardous Waste Number(s), potential hazardous constituents in and/or characteristics of the waste, and regulatory limits. Explosives that may be treated by OB at the TA-16 burn ground are listed in Engineering Science and Applications (ESA) standard operating procedures (SOP), included as examples in Appendices C through J of this document.

3b.1.1.1 Homogeneous RCRA-Hazardous HE Waste

Homogeneous (i.e., uniform composition) RCRA-hazardous HE wastes treated by OB at LANL are described generally in the following paragraphs.

HE-Contaminated Water with Solvent

HE-contaminated water with solvent is generated at TA-9 and TA-16. This waste consists primarily of water and solvent from laboratory analysis and/or solvents from HE processing.

HE-Contaminated Spent Solvent Waste

Spent solvent waste is generated at TA-9 and TA-16. This waste consists of spent solvents used to dissolve HE and polymers and spent solvents from laboratory analysis.

HE-Contaminated Water

HE-contaminated water is generated at TA-9, TA-11, TA-16, TA-22, and TA-40, primarily from pressure-washing walls, equipment, and floors and from water-cooled HE-machining operations.

HE-Contaminated Used Oil

HE-contaminated used oil is generated at TA-9 and TA-16 from hydraulic presses and lubrication systems associated with HE-machining operations.

Solid and Scrap HE

Solid HE is generated at TA-9, TA-11, TA-16, TA-28, TA-37, and TA-40 from HE preparation. It consists of off-specification or obsolete HE. Scrap HE is generated at TA-9 and TA-16 from machining and forming processes.

HE-Contaminated Environmental Restoration Soil and Debris

ER soil and debris potentially contaminated with HE is generated at LANL from remedial activities, including investigation-derived waste.

HE-Contaminated Commercial Chemical Products

HE-contaminated commercial chemical products may be generated at various TAs throughout LANL that manage HE. This waste may consist of spilled or off-specification unused commercial chemical products potentially contaminated with HE.

Wastewater Treatment Sludge from HE Processing

Wastewater treatment sludge from HE processing is generated at TA-16-401 and TA-16-406. HE-contaminated water is poured into a filter vessel, which separates the liquid to form a sludge.

Spent Carbon From the Treatment of HE-Contaminated Wastewater

Spent carbon from the treatment of HE-contaminated wastewater is generated at TA-16-363.

3b.1.1.2 Heterogeneous RCRA-Hazardous HE Waste

Heterogeneous (i.e., dissimilar or diverse composition) RCRA-hazardous HE wastes treated by OB at TA-16 are described generally in the following paragraphs.

HE-Contaminated Waste

HE-contaminated waste is generated at TA-9, TA-11, TA-16, TA-22, TA-37, and TA-40, and may include solvent-contaminated discarded paper, glassware, tools, wood, and other waste from HE-processing activities, ER activities, plastic forming, and from general laboratory use.

HE-Contaminated Equipment

HE-contaminated equipment is generated at TA-9, TA-11, TA-16, TA-22, and TA-40 and includes discarded, noncombustible equipment and material from HE-processing areas.

HE-Contaminated Waste Rags and Wipes

HE-contaminated waste rags and wipes are generated at TA-9, TA-16, TA-22, and TA-40. This waste includes solvent soaked rags and wipes used at HE-processing areas (e.g., hydraulic press operations, laboratory analysis, or other miscellaneous uses).

HE-Contaminated Liquid Acids, Bases, and/or Inorganic Salts

Liquid acids, bases, and/or inorganic salts are generated at TA-9. This waste may consist of materials used as titrates, solvents, cleaning fluids, and/or materials from hydrolysis research.

3b.1.2 Description of OB Units

The OB thermal treatment units at TA-16 are currently operating under RCRA interim status. The units include:

- TA-16-387 Flash Pad
- TA-16-388 Burn Pad (to be converted to Flash Pad 388/Burn Tray 388)
- TA-16-394 Burn Tray
- TA-16-399 Burn Pad
- TA-16-401 Filter Vessel
- TA-16-406 Filter Vessel

Flash Pad 388 and Burn Tray 388 will be used to treat waste types formerly treated at Flash Pad 387 (except for MDA P waste) and Burn Tray 394. Flash Pad 387 will undergo closure following closure activities at MDA P and approval of Flash Pad 388 operations. Burn Tray 394 will undergo closure after operations conducted there are relocated to Burn Tray 388 and Burn Tray 388 is approved for use.

Information on the design features of and operations at the OB thermal treatment units is available in other sections of this permit application.

3b.2 WASTE PARAMETERS [20 NMAC 4.1, Subpart V, 264.13(a)(1)]

A detailed chemical and physical characterization based solely on process knowledge will be performed prior to thermal treatment of RCRA-hazardous HE waste, as required by RCRA. Parameter selection and waste characterization of HE waste is based solely on process knowledge due to the potential safety problems associated with management of this material, the lack of laboratory capability for chemical analysis of HE waste, and the fact that the EPA manual titled "Test Methods for Evaluating Solid Waste, Physical/Chemical Methods" (SW-846) (EPA, 1992a) has no applicable required methodology for characterization of HE waste. Process knowledge provides complete and adequate characterization for the safe and compliant treatment of HE waste by OB. Waste parameters will be selected to ensure that this characterization will contain all information necessary to properly treat waste in accordance with RCRA general facility standards and LDR requirements. Characterization will be performed using the procedures described in Section 3b.3.

3b.2.1 Proposed Characterization Parameters and Methods [20 NMAC 4.1, Subpart V, 264.13(b)(1), and Subpart IX, 270.14(b)(2)]

Proposed parameters, characterization methods, and rationale for RCRA-hazardous HE waste at LANL are summarized in Table 3b-2. The parameters listed in Table 3b-2 were selected based on process knowledge for the various homogeneous and heterogeneous waste forms described in Section 3b.1.1.

3b.2.2 Criteria and Rationale for Parameter Selection [20 NMAC 4.1, Subpart V, 264.13(b)(1)]

Waste analysis parameters were selected to characterize RCRA-hazardous HE waste in conformance with RCRA regulatory requirements. These parameters are based on knowledge of raw materials and physical/chemical processes of waste-generating activities, and may be supported by limited analytical results. The rationale for the selected parameters are identified in Table 3b-2.

3b.3 CHARACTERIZATION OF HE WASTE

RCRA hazardous HE wastes generated by testing and experiments are readily characterized by process knowledge. This is primarily because the composition and reactive characteristics of these materials are well documented. Established HE must have fairly consistent chemical composition for successful experimental usage. Off-specification HE has the same composition as product HE. In addition, only allowable explosive material and/or experimental explosives/components are used at LANL by the ESA, Dynamics Testing (DX), and Materials Science and Technology (MST) Divisions.

If plans are made to treat a RCRA-hazardous HE waste that has not previously been treated by OB, LANL will collect enough information to effectively characterize this waste stream and document the characterization prior to initiating the treatment process.

3b.3.1 Waste Profiling System [20 NMAC 4.1, Subpart V, 264.13(a)(3), 264.13(b)(4) and (5), and Subpart IX, 270.14(b)(2)]

In an effort to maintain detailed and accurate waste characterization information, LANL's Hazardous and Solid Waste Group (ESH-19) and the Chemical Science and Technology (CST) Division use a generator waste-profiling program. RCRA-hazardous HE waste is characterized using process knowledge, which is provided by individual waste generators on LANL's Waste Profile Form (WPF). The WPF is described in detail below and in LANL's Administrative Requirement 10-9, "Waste Profile Form." The waste-profiling effort requires each waste generator to provide a detailed written description of the waste on a standardized WPF (Figure 3b-1). The waste description can be based on generator process knowledge (as is the case for RCRA-hazardous HE waste), the use of appropriate Material Safety Data Sheets (MSDS), and/or the results of a chemical/physical analysis of the specific waste. By completing the WPF, waste generators supply information that allows for proper management of RCRA-hazardous HE waste. Specific waste information requested on the WPF includes:

- Point of generation
- Method of characterization
- Waste categories
- Waste description
- Waste origination
- Classification of radioactivity
- Presence of toxic metals and an estimate of concentration
- Presence of organic compounds and an estimate of concentration
- Identification of hazardous constituents
- Identification of hazardous characteristics.

A correctly completed WPF contains enough data to classify the waste as either non-RCRA-regulated waste, RCRA-regulated solid waste (i.e., regulated under RCRA Subtitle D), RCRA-regulated hazardous waste (i.e., regulated under RCRA Subtitle C), or radioactive waste. These four waste classifications are each divided into categories that further distinguish specific wastes. For example, RCRA-regulated hazardous waste is categorized as ignitable, reactive, corrosive or toxicity characteristic, and any additional chemical constituents must be listed. For radioactive waste, activation products, fission products, transuranic radionuclides

Table 3b-1 (Continued)

Descriptions of Hazardous Waste Treated by Open Burning at Los Alamos National Laboratory

Waste Description	Waste-Generating Process Description	Technical Areas (TA) Where Waste is Generated	Basis for Characterization	Potential EPA[a] Hazardous Waste Numbers	Potential Hazardous Constituents and/or Characteristics in the Waste	Regulatory Limits[b] (milligrams per liter)
Homogeneous Wastes (Continued)						
Solid and scrap HE	Off-specification or obsolete HE; and from machining and forming HE	TA-9, TA-11,TA-16, TA-28, TA-37, and TA-40	Process knowledge	D003	Reactivity	NA[c]
HE-contaminated environmental restoration (ER) soil and/or debris Note: debris would be considered a heterogeneous waste	Waste generated during remediation and decontamination and decommissioning (D&D) activities; and investigation-derived waste	Historic firing sites and TAs where past and present D&D activities have taken place	Process knowledge and/or limited analysis	D003 D005 D006 D007 D008 D009 D011 D030 K044 F001 F002 F003 F005	Reactivity Barium Cadmium Chromium Lead Mercury Silver 2,4-Dinitrotoluene Wastewater treatment sludge from explosives processing Spent halogenated solvents used in degreasing Spent halogenated solvents Spent nonhalogenated solvents Spent nonhalogenated solvents	NA[c] 100.0 1.0 5.0 5.0 0.2 5.0 0.13 NA[c] NA[c] NA[c] NA[c] NA[c]

Refer to footnotes at end of table.

Table 3b-1 (Continued)

Descriptions of Hazardous Waste Treated by Open Burning at Los Alamos National Laboratory

Waste Description	Waste-Generating Process Description	Technical Areas (TA) Where Waste is Generated	Basis for Characterization	Potential EPA[a] Hazardous Waste Numbers	Potential Hazardous Constituents and/or Characteristics in the Waste	Regulatory Limits[b] (milligrams per liter)
Heterogeneous Wastes						
Solvent/HE-contaminated waste, may include paper, glassware, tools, and other waste contaminated with solvents	HE processing, plastic forming, and from general laboratory use	TA-9, TA-11, TA-16,TA-22, TA-37, and TA-40	Process knowledge	D003 F001 F003	Reactivity Freon, Trichlorofluoroethane Acetone	NA[c] NA[c] NA[c]
HE-contaminated equipment	HE processing	TA-9, TA-11, TA-16, TA-22, and TA-40	Process knowledge	D003	Reactivity	NA[c]
HE-contaminated waste rags and wipes	HE processing, (e.g., hydraulic press operations, laboratory analysis, or other miscellaneous uses)	TA-16, TA-9, TA-22, and TA-40	Process knowledge	D001 D003 F001 F002 F003 D022 U044 U003	Ignitability Reactivity 1,1,1-Trichloroethane 1,1,1-Trichloroethane Acetone Chloroform Chloroform Acetonitrile	NA[c] NA[c] NA[c] NA[c] NA[c] 6.0 NA[c] NA[c]
HE-contaminated liquid acids, bases, and/or inorganic salts	Materials used as titrates, solvents and cleaning fluids and material from hydrolysis research	TA-9	Process knowledge	D002 D003 D005 D007 D009	Corrosivity Reactivity Barium Chromium Mercury	NA[c] NA[c] 100.0 5.0 0.2

a U.S. Environmental Protection Agency.

b A solid waste exhibits the characteristic of toxicity if the extract from a representative sample of the waste contains any of the contaminants listed at a concentration equal to or greater than the respective value given in the New Mexico Administrative Code, Title 20, Chapter 4, Part 1 (20 NMAC 4.1), Subpart II, 261, Subpart D.

c Not applicable: refers to the absence of regulatory limits for ignitable, corrosive, reactive wastes, and F-, K-, and U-listed wastes.

Table 3b-2 (Continued)

Parameters, Characterization Methods, and Rationale for RCRA-Hazardous High Explosive (HE) Waste

Waste Description	Parameter[a]	Characterization Method	Rationale
Homogeneous Wastes (Continued)			
Wastewater treatment sludges from the processing of HE	- Reactivity	- Acceptable knowledge[b]	- Determine characteristic for reactivity
Spent carbon from the treatment of HE-contaminated wastewater	- RCRA-regulated organics - Reactivity	- Acceptable knowledge[b]	- Determine the presence of K- and F-listed wastes
Heterogeneous Wastes			
Solvent/HE-contaminated waste, may include paper, glassware, tools, and other waste contaminated with solvents	- Reactivity - RCRA-regulated organics	- Acceptable knowledge[b]	- Determine characteristic for reactivity - Determine the presence of F-listed solvents
HE-contaminated equipment	- Reactivity	- Acceptable knowledge[b]	- Determine characteristic for reactivity
HE-contaminated rags and wipes	- RCRA-regulated organics and metals - Ignitability - Reactivity	- Acceptable knowledge[b]	- Determine characteristic for ignitability and reactivity - Determine toxicity characteristic - Determine the presence of F-listed solvents
HE-contaminated liquid acids, bases, and/or inorganic salts	- RCRA-regulated metals - Corrosivity - Reactivity	- Acceptable knowledge[b]	- Determine characteristic for corrosivity and reactivity - Determine toxicity characteristic

[a] Parameter selection is based on process knowledge for each waste stream. Additional parameters may be selected for each waste stream as necessary.

[b] According to U.S. Environmental Protection Agency (EPA), 1994, "Waste Analysis at Facilities that Generate, Treat, Store, and Dispose of Hazardous Waste, A Guidance Manual," *OSWER 9938.4-03*, U.S. Environmental Protection Agency, Office of Solid Waste and Emergency Response, Washington, D.C., acceptable knowledge is broadly defined as process knowledge, waste analysis data (e.g., sampling and analysis), and/or facility records of analysis.

- Used oil drained from explosive processing equipment is stored in disposal cans or 55-gallon drums marked "Hold for Disposal." ESA-WMA maintenance personnel identify each container, or group of containers if the material has a common source, with an identification number and record of the source, fluid type, and date of removal. These fluids are burned at the oil/solvent burn tray.

The procedure for collecting HE-contaminated sludge from sumps associated with development and fabrication units is briefly summarized here. All pieces of HE retained in the small wire basket located at the sump inlet are placed in paper or plastic bags and then packaged in cardboard boxes. The flexible hose from the ESA-WMA vacuum truck is inserted into the HE slurry at the bottom of the tank. Up to 500 gallons of slurry and waste water can be collected. After completion of the sump cleaning operations, the truck is driven to the filter vessels at the burning ground where the water/HE slurry is treated.

Prior to burn operations, the gate on the access road is closed by the HE disposal crew. The closest property, not owned by LANL, is at a distance greater than one mile from the burning ground. Operations are not conducted at the burning ground if an electrical storm is in progress or is approaching. No more than two persons are involved in setting the ignition train and squibs in preparation for a burn. The master controls for the firing circuit are located inside a control shelter. The control shelter is no less than 300 ft from all burn operations. Personnel engaged in explosives disposal activities are thoroughly trained in the hazards associated with handling, transporting, and disposing of explosives, and in the precautions necessary for personnel protection. All personnel are instructed in and are expected to follow the applicable ESA-WMA procedures when at TA-16. Operators engaged in disposal operations at the burning ground wear flameproof coveralls, industrial safety shoes, and appropriate eye protection.

All open burn operations are conducted in accordance with appropriate standard operating procedures (SOP). Adherence to the SOPs ensures safe and efficient HE destruction and decontamination of flashed materials. Efficient decontamination is also expected to result in minimization of products of incomplete combustion.

All records, including plans, required under 20 NMAC 4.1, Subpart V, 264, Subpart E will be furnished upon request and made available at all reasonable times for inspection by duly designated representatives of the New Mexico Environment Department (NMED) and the EPA. To satisfy the requirements of 20 NMAC 4.1, Subpart V, 264.74(c), a copy of records of waste disposal locations and quantities, as required by 20 NMAC 4.1, Subpart V, 264.73(b)(2), will be

submitted to NMED and the local land authority upon closure of the facility. Shipments to off-site facilities will comply with the requirements of 20 NMAC 4.1, Subpart III.

4.2.1 Off-Normal Waste Generation

The Material Disposal Area P (MDA-P), adjacent to the burning ground at TA-16, is scheduled for closure. The TA-16 open burn units may be used for destroying any HE on contaminated debris from remediation and closure of the MDA-P. Because MDA P covers a relatively large area (approximately 7 acres) and because waste disposal occurred over a relatively long period of time (approximately 30 years), the nature and quantity of materials contained therein can only be estimated. The values given here are based on currently available information and may be higher or lower, depending on the actual materials encountered during the cleanup of MDA P. The MDA-P contains an estimated 30,000 cubic yards (yd^3) of waste and debris. Waste that may be generated during closure of the MDA-P includes personal protective clothing (approximately 150 yd^3), disposable sampling equipment (approximately 160 yd^3), liquids and sludges from decontamination (approximately 22,000 gallons), debris, and soil/tuff (approximately 30,000 yd^3) from the waste pile. The waste will be treated or disposed of within 90 days of excavation. A closure plan has been submitted to NMED for MDA-P. Estimated waste types are included in the TA-16 Part A permit application included as Attachment 1-1 of Section 1.0 of this permit application.

The Environmental Restoration Program is conducting clean-up of TA-9, -11, -16, -28, and -37. The materials potentially sent from these operations would include approximately 4 55-gallon drums of personal protective equipment, approximately 3,500 yd^3 of soil and debris per year, approximately 4 55-gallon drums of liquid (wash water), and approximately 3 liters of spent acetone. Only those hazardous wastes included in routine operations (see the TA-16 Part A permit application) would be burned or flashed at the burn ground.

4.3 TA-16-387 AND -388 FLASH PADS TREATMENT OPERATIONS

Flashing operations are conducted to remove HE contamination from materials. In addition, spent carbon filters that may contain listed solvents from the wastewater treatment unit and washwater from mopping may be flashed. The carbon itself is not consumed but is then taken to TA-54 and managed as a RCRA listed hazardous waste. Any materials that are potentially contaminated with HE must be flashed prior to disposal because of safety concerns. Treatment personnel deliver potentially HE-contaminated, unburnable materials to the burning ground. The materials are inspected for reservoirs of oils, other fluids, and excessive deposits of explosives before they are delivered to the burn ground, and if found, these reservoirs and

excessive deposits are removed before flashing. Valves on any sealed containers are opened or removed.

Historically, up to 1,600 lbs of wood pallets, kindling wood, or scrap lumber has been placed on the bottom grill of the burning ground stand or on and around the flash pile at Flash Pad 387. This wood fuel source may include both uncontaminated wood and HE-contaminated wood. The flash pad consists of a concrete pad surrounded on three sides by concrete blocks. The amount of wood used is determined by the type and quantity of materials to be flashed, but is always sufficient to ensure that the flashing is complete and no HE contamination remains. Each burn requires approximately one-half gallon of kerosene and excelsior (or other appropriate material) to ignite the wood. In addition, when available, 20 to 50 lbs of HE-contaminated rags, paper, cardboard, plastics, packing material, and combustible firing site debris are mixed with the wood to aid in ignition and act as a combustion source. The amount of unburnable material flashed in each burn is approximately one-and-a-half tons and consists primarily of metal and glass (e.g., machine tools, vacuum piping and pumps, glass containers, filters). An ignition train is prepared with a one-to-two ft train of excelsior (or other appropriate material) up to the material on the pad. The excelsior (or other appropriate material) is dampened with kerosene. Squibs are placed approximately one inch from the excelsior (or other appropriate material) and ignition is initiated according to the steps outlined in current ESA-WMA procedures. After completion of the burn, ash from fuel wood and other burnable fuels (e.g., rags, paper) is collected and analyzed. If barium or other RCRA-characteristic metals are found, the ash is sent to TA-54 as hazardous waste. If barium or other RCRA-characteristic metals are not found, the ash is sent to TA-54 as a nonregulated waste.

A proposed alternative to wood fuel is the use of propane burners to flash suspect HE-contaminated waste. This alternative will reduce the amount of air and land disposal emissions from the operation and, if implemented, will be used for the majority of burns at Flash Pad 387. The wood fuel option, including the use of HE-contaminated wood, will be maintained and used on an as-needed basis. Aerial combustion emissions will be reduced by using propane as the fuel rather than scrap wood (see Attachment 4-1). Depending on the amount of material to be flashed, from one-to-three portable burners would be placed in front of the flash pad at a distance of 2 to 6 ft. Each burner would have an adjustable heat output in the range of 500,000 to 1,400,000 British Thermal Units (BTU) per hour (hr) and have a flame length of 8 to 12 ft. It is estimated that 1,000,000 BTU/ton (11 lbs of liquid propane per ton of equipment flashed) would be required to heat up and maintain the equipment at a temperature

of 800 to 1,000 degrees Fahrenheit (°F) to ensure destruction of all known and potential HE contamination (Figures 4-4 to 4-5). DX-16 has designated that 665°F is the minimum temperature at which all explosives used in DX and ESA operations will be thermally decomposed. Several thermocouples will be placed on and within the equipment being flashed to record temperatures and to document that the materials reached and maintained the required temperature levels for the necessary time. Recorded temperature data and an additional HE screening test clean certification will allow flashed materials to be designated as nonHE-contaminated and available for commercial salvage, when appropriate. In addition, the use of propane burners would minimize the generation of ash requiring disposal.

A minimum of 24 hours must lapse after burning (if wood is used) before ashes and other nonburnable equipment can be collected. Wood-flashed material is disposed of as administratively-controlled, nonhazardous waste; propane-flashed material will be commercially salvaged. Approximately 30,000 yd^3 of waste material will be flashed at the TA-16-387 pad annually. Upon completion of closure activities at MDA P, Flash Pad 387 will undergo closure (see Section 9.3).

Flash Pad 388 will consist of a 75 ft by 40 ft concrete pad/foundation with a polypropylene-lined secondary containment area at one end. HE-contaminated unburnable waste materials will be flashed using up to 6 propane burners, depending on the amount of material to be flashed (Figures 4-6 and 4-7). The wood fuel option, including the use of HE-contaminated wood, will be maintained as an alternative fuel source at Flash Pad 388. A retractable cover will be positioned over the flash pad area to prevent precipitation run-on. Flashing operations at TA-16-388 will be conducted in the same manner as discussed above for Flash Pad 387.

4.4 TA-16-388 AND -399 BURN PADS

When HE materials are delivered to the burning ground, (Figure 4-8) boxed explosives are unloaded and left inside the fenced area of the burn pad to be used. After unloading, any vehicle(s) used to deliver HE materials is then moved to an appropriate safe location prior to treatment operations. The burn pads consist of elevated metal trays lined with fire brick and sand (see Figure 4-8). A layer of 15-lb asphalt felt, roofing paper, or other appropriate padding material is placed over the sand in the elevated burn pad and HE material is removed from boxes and placed on the padding material in a single layer. After the containers have been emptied, they are placed beside or on top of the HE for burning, or are returned to the delivery vehicle or other appropriate area. Any unidentified material or material that should not be burned (e.g., detonators) is removed from the padding material and repackaged. An ignition

train is prepared and ignited as described above. No more than 1,000 lbs of HE may be burned at one time. After 24 hours, ashes and surface sand are removed from the tray and placed in a 55-gallon drum. The drum is managed by CST-7 as a hazardous waste if the ash is found to contain toxic concentrations of barium. Approximately 10,000 lbs of material will be burned annually.

Operations at Burn Pad 388 will cease before the unit is converted to a flash pad/burn tray area. Design and operations information for Flash Pad 388 and Burn Tray 388 is provided in Sections 4.3 and 4.5, respectively.

4.5 TA-16-394 AND -388 BURN TRAYS TREATMENT OPERATIONS

Currently, LANL is permitted under New Mexico Air Quality Control Regulation (AQCR) 301 to burn up to 2,500 gallons of dilute solvents per year in specialized solvent trays at the TA-16 burn grounds. Up to 55 gallons per burn are allowed under the conditions of the permit. An example make-up of the dilute solvent solution is approximately 30% methanol, 25% water, 20% acetonitrile, 20% tetrahydrofuran, 5% of any of the solvents listed in the TA-16 Part A permit application (Section 1.0, Attachment 1-1), and trace amounts of HE. Occasionally oil contaminated with HE will be burned. Potential emissions were estimated using data from "Prediction of Fire Properties of Fuels" (Tewarson, 1985). Potential emissions from solvent burning are shown in Table 3 of Attachment 4-1.

The oil/solvent burn tray (Figure 4-9) is currently used to flash suspect HE-contaminated oils and solvents in accordance with an air quality burn permit (AQCR 301) issued by NMED. Each burn consists of pouring approximately 55 gallons of HE-contaminated oils and solvents into burn tray pans and igniting the mixture. The TA-16-394 burn tray consists of two 8-inch-deep, 1/4-inch-thick welded steel pans elevated in a concrete secondary containment vessel. The secondary containment vessel contains a layer of gravel and sand and is lined with fire bricks (see Figure 4-9). Potential flammable solvents include toluene, acetone, alcohol, methyl ethyl ketone, and other HE-contaminated liquids resulting from HE analysis and processing. Used HE-contaminated hydraulic fluids are drained from explosive processing and machining equipment and burned. The total percentage of the HE in the solvent/fluids mixture is unknown, as is the percentage of solvents.

In addition to standard apparel, respirators must be worn when volatile solvents will be treated during a burn. Face shields or other suitable eye protection are worn while liquid is discharged and during cleanup operations when airborne particles constitute an eye hazard. HE-

contaminated waste oils/solvents are collected in containers and delivered to the liquid burn pad. Small (e.g., 5-gallon) containers are unloaded by hand; the truck boom may be used to unload larger (e.g., 55-gallon) containers from the vehicle. After unloading, the truck is driven to the TA-16-389 parking area and parked. HE-contaminated liquids are poured into the burn trays by hand if in small containers, or using a plastic plug, valve, and hose to empty large containers. A grounding strap is attached to the container and the tray before liquid transfer. Equipment used to load the trays must be thoroughly cleaned before being stored at the burning ground. Historically, excelsior (or other appropriate material) and squibs are used to initiate ignition as described above.

The operations at Burn Tray 394 will be relocated at the TA-16-388 flash pad/burn tray area. Once the burn tray operations have been moved to TA-16-388 and Burn Tray 388 is approved for use, Burn Tray 394 will undergo closure. The burn tray at TA-16-388 will consist of a 25 ft by 40 ft concrete pad with a secondary containment area at one end (Figure 4-10). A retractable cover can be positioned over the burn tray to prevent precipitation run-on. Propane burners (Figures 4-10 and 4-11) have been proposed as an alternative to excelsior (or other appropriate material) and squibs. As part of this alternate procedure, the burn tray size would be 75 gallons. The propane burners can provide a more efficient method of destroying solvent/water mixtures and reducing air emissions. An adjustable 50,000 to 200,000 BTU/hr propane flare burner will be placed under the 75-gallon tray to vaporize the HE-contaminated mixtures. Two 25,000 to 50,000 BTU/hr propane flare burners will be placed over the tray to ignite solvent vapors. Water in the water-solvent mixture (ranging from 0 to 95%) would be boiled off in the process. The heat that will be supplied to the tray by the propane burners will be approximately 1.1 lb of liquid propane (or 100,000 BTU) per 50-gallon burn. The 100,000 BTU would be used to boil/flash any 50-gallon solvent/water mixture (95% water or 100% solvent). Approximately 700 gallons of HE-contaminated solvent/water mixtures will be boiled/flashed annually. The wood fuel option, including the use of HE-contaminated wood, will be maintained as an alternative fuel source at Burn Trays 388 and 394,

Little or no ash is generated in the burn trays. Residues from the burning of listed hazardous wastes in the burn trays are managed as a hazardous waste by CST-7.

The conceptual design for the flash pad/burn tray areas at TA-16-388 is shown on Figure 4-12.

4.6 TA-16-401 AND -406 FILTER VESSELS TREATMENT OPERATIONS

HE-contaminated sludge is delivered to the filter vessel (Figure 4-13) in a vacuum truck. The filter vessel is constructed of welded steel and lined with fire bricks. The end of the discharge hose is placed into the filter vessel, the valve on the bottom of the tank is opened, and the slurry is gravity-fed into the filter vessel. Liquid passes through the sand/gravel filter bed into a fluid drain at the base of the filter vessel and through carbon adsorption units at the wastewater treatment unit located near the filter vessels. Treated effluent is discharged to the nearby canyon through a National Pollutant Discharge Elimination System (NPDES)-regulated discharge point after laboratory analysis to ensure NPDES permit compliance. After the slurry is drained from the tank, the inside of the tank and the discharge hose are washed with water that filters to the wastewater treatment unit. Rags or Kimwipes® are used to clean explosives off the inspection port cover, and these are placed in the filter vessel for treatment. Waste chunks collected from the wire cage in the sump are added to the sludge. When the filter is full, the wet waste is distributed to a uniform thickness, not to exceed three inches (maximum 750 lbs), with a spark-proof rake. A cover is then positioned on the filter vessel and secured, and hot air is blown into the filter vessel. When the waste sludge is dry, the filter vessel cover is removed and the sludge is ignited remotely with excelsior (or other appropriate material) and squibs as described above. Ashes and a small amount of sand are removed from the filter vessel 24 hours after the burn is complete. These are drummed and managed by CST-7 as a hazardous waste if toxic levels of barium are detected by analyzing the residue, and/or if listed solvents have been comingled with the sand or ash in the filter vessels. Fresh sand is added to the filter vessels as necessary. Approximately 10,000 lbs of waste material will be burned annually.

4.7 EXPOSURE INFORMATION

The major migration pathways and relevant environmental media through which exposure to residual contaminants could occur include: (1) liquid or ash infiltration into near-surface or subsurface soils, (2) wind entrainment and dispersal of surface soil and atmospheric dispersion of volatiles, and (3) surface water runoff carrying soil/sediment in suspension and solution. Secondary pathways include: 1) uptake by animals from ingestion and inhalation of contaminated media, and (2) root uptake by plants from contaminated soils (LANL, 1993a).

Only solid materials composed of or potentially contaminated with HE are burned in the burn pads. Ashes and surface sand are removed and packaged after each treatment as described in Section 4.4. A movable rain cover is used to prevent precipitation from contacting material

in the tray. No potential for liquid pollutant releases to the surrounding surface soil is associated with this treatment.

Liquid wastes contaminated with HE are burned at Burn Tray 394 in two 8-inch welded steel pans placed within a concrete containment vessel filled with sand and gravel. When operations at Burn Tray 394 are moved to Burn Tray 388, liquid wastes contaminated with HE will be burned in a 75-gallon-capacity burn tray located within a secondary containment area. The secondary containment serves to contain any liquid spills and prevent liquid releases to the surrounding surface soil during treatment operations. Additionally, weekly inspections are conducted to verify the structural integrity of the trays.

Machinery or materials potentially contaminated with HE and other materials that are treated on Flash Pad 387, are placed on removable concrete slabs for flashing. Similar HE-contaminated materials to be treated on Flash Pad 388 will be placed on a concrete pad, which will be surrounded by secondary containment. Ash on and around the pads is removed and packaged as described in Section 4.3. Cleaning the areas as soon as allowable minimizes releases to the environment.

Operational procedures require that open burning not be undertaken at a time of impending electrical storms and during high wind conditions. Burns are carried out in steel vessels containing absorbent sand. The steel vessels are covered within 24 hours after treatment to prevent storm runoff. The contaminated sand and residues are subsequently collected, drummed, and managed as dictated by analytical results.

4.7.1 General (LANL Air Quality)

LANL is committed to operating within the requirements set forth in federal and state air quality statutes while maintaining the operational flexibility to respond to changing strategic initiatives. LANL is in compliance with all federal and state nonradiological ambient air quality standards. Emissions from operations at LANL will be reported annually to the State of New Mexico Environment Department's Air Pollution Control Bureau as required by the 1990 Clean Air Act Amendments and by the State of New Mexico's Operating Permit Program.

Monitoring for criteria pollutants was performed at the boundary of Bandelier and TA-49, approximately 15,500 ft south/southeast of the TA-16 burn grounds by the National Park Service. The three year study found that criteria pollutants measured at the station were

representative of that found throughout northern New Mexico. Attachment 4-1 gives supplemental air quality information.

4.7.1.1 Emissions from Operations at TA-16

The majority of airborne emissions from the operations conducted at TA-16 are made up of complete and incomplete combustion products from the burning of HE and HE-contaminated materials. A small amount of air emissions are from the evaporative losses of discarded solvents prior to burning. Open burning of hazardous waste is allowed at TA-16 by NMED and regulated under New Mexico AQCR 301, "Regulation to Control Open Burning." AQCR 301 allows the open burning of explosive materials where the transportation of such material to other facilities could be dangerous. An open burning permit application for TA-16 is submitted to NMED annually for review and approval.

Air emission estimates are performed annually (current estimates are provided in the Supplemental Information Sheet, Attachment 4-1) for the operations described in this application. Emissions from the TA-16 operations include contaminants regulated under National or New Mexico Air Quality Standards which include ambient air quality standards for CO, NOx, PM, and SO_2. Other regulated emissions from the operations include small amounts of HAPs (i.e., hydrogen fluoride, hydrogen chloride), and air toxics (i.e., butylacetate, ethylacetate, cyclohexane). Emissions from all regulated pollutants from these operations have been estimated using general burn volumes and are in compliance with all applicable air quality standards.

4.7.1.2 Air Pathways and Off-Site Impacts

The predominant exposure pathway for open burning of reactive wastes is inhalation of airborne products of complete and incomplete combustion. Estimated emissions impacts at the nearest off-site receptor, Bandelier National Monument, are determined using dispersion modeling analysis (current estimates are provided in Attachment 4-1). Modeling analysis is performed to estimate air quality impacts of stationary sources using models approved by EPA.

4.7.2 Surface Water Pathways

LANL operates under an NPDES general storm water permit (NMR00A384) and under an NPDES outfall permit (NM0028355). In accordance with this permit, a Storm Water Pollution Prevention Plan (LANL, 1994c) was developed for TA-16. Open burn structures at TA-16 that have or will have a weather cover to prevent entrance of rainwater include Flash Pad 388, Burn Tray 388, Burn Tray 394, Burn Pad 388, Burn Pad 399, and Filter Vessels 401 and 406.

Potential nonstorm water discharges include: water discharge from water hoses located at each burn pad for fire control purposes; accidental spills or leakage from vessels containing HE-contaminated oil, HE-contaminated water, or HE-contaminated water/solvent mixtures; and accidental leakage or spills from the tank truck that transports HE wastewater from HE-processing facilities to the TA-16 burn ground.

Pollutant sources from TA-16 burn ground operations include a minimal amount of ash residue from the TA-16-387 flash pad. Ash as a pollutant source is minimized because most of the residue is removed from the flash pad immediately following a burn and packaged and shipped in drums. Ash left on the flash pad is listed as a pollutant source under the NPDES permits. Once Flash Pad 387 is closed following closure activities at MDA P, this source will be eliminated. Storm water is prevented from contacting the HE-contaminated equipment waiting to be flashed by covering the equipment with plastic. Flashed equipment is transported to TA-54 and buried as a nonhazardous material.

Storm water run-off that could have come in contact with adjacent areas of MDA-P has been diverted in a major construction task that was completed in 1994. This task included: 1) blocking off the existing 36-inch culvert under the paved entrance to the TA-16-387 flash pad, and installing a new 24-inch culvert under the main roadway to the south side of the roadway, which will divert storm water run-off from north of the roadway away from MDA-P, (2) excavating a deep drainage channel to allow existing drainages to enter the channel and include a wide apron area to collect run-off, and between TA-16-386 and TA-16-387 to collect water and divert it into the drainage channel, (3) filling and compacting the existing trench between the barbed-wire fence and MDA-P using nonabsorbing/nonpermeating packed material that will not allow water to seep into MDA-P, and (4) constructing a diversion berm in the drainage north of the new drainage channel exiting the TA-16-387 flash pad.

When oil is burned in Burn Tray 394, the cover is removed and the oil is ignited. While burning, small amounts of oil may bubble out of the tray into the rock-filled concrete containment vessel. Oil splash-over from these operations is exposed to storm water. This splash-over is not identified as a pollutant source because the concrete containment vessel contains the oil/storm water mixtures and is equipped with a drain pipe valve to remove liquid. The drain pipe remains capped until collection is necessary. When collected, the oil/storm water is placed into the burn tray for treatment. Burn Tray 394 is elevated to prevent storm water run-on. When oil is burned in Burn Tray 388, the cover is retracted and the oil is ignited.

Any oil splash-over will be confined in the secondary containment area and will not become a pollutant source.

The burn pads that are currently in use for HE disposal have rain covers and are elevated, to prevent pollutant release by storm water. If fire control hoses are used, there is a chance that the water used for fire control will spread ash residue pollutants beyond the confines of the pad. In this case, the ash pollutant could be dispersed by storm water. The majority of this water would be diverted to collection areas and culverts.

Small amounts (i.e., less than two gallons) of residual oil from hydraulic equipment have leaked from some of the equipment onto the ground near the TA-16-387 flash pad and are listed as a pollutant source under the NPDES permits. A containment berm around the stored equipment has been installed, and this equipment is currently covered with a tarp (LANL, 1994c).

Water quality data collected in Cañon de Valle since 1994 shows barium and RDX (a form of HE) at levels above New Mexico State Drinking Water standards. Barium concentrations are less than 4 ppm and RDX is less than 200 ppb. Levels in water and sediment do not increase downstream from the TA-16 burn ground, suggesting that the burn ground is not the principal source of these surface water contaminants. Attachment 4-2 provides additional hydrological information and presents a conservative scenario to evaluate possible waterborne waste transport pathways and their potential for containment migration.

4.7.3 Groundwater Pathways

The vadose zone of the Bandelier Tuff is not saturated, except in very shallow and localized areas. The low moisture content and extensive thickness of the unsaturated rock is believed to impede movement of fluids down to the main aquifer. The main aquifer is primarily located in the Santa Fe Group and Puye Formation at depths of several hundred to greater than 1,000 ft below the mesa tops. The annual precipitation in this area varies between 13 and 18 inches. The evaporation of free standing water is much greater than the annual precipitation.

Because of the high annual evaporation rate (i.e., greater than or equal to 2 ft per year), the great depth to the main aquifer (i.e., greater than 1,000 ft), and the nature of the geology of the area, the groundwater pathway is unlikely to be an important transport pathway at TA-16 (LANL, 1993a). A groundwater waiver has been requested (DOE, 1987) based on the absence of free-flowing groundwater within the uppermost 200 ft beneath the units, and on the

hydrologic conditions in this upper zone, which indicate no migration of contaminants to groundwater.

An extensive groundwater monitoring system established to assess water quality and detect contaminants in the water supply exits as part of LANL's groundwater protection activities. The monitoring system is maintained to detect any effects that Laboratory activities may have on the main aquifer. Further details can be obtained in LANL's "Groundwater Protection Management Program Plan" (LANL, 1995).

Attachment 4-2 provides additional hydrological information and presents a conservative scenario to evaluate possible waterborne waste transport pathways and their potential for containment migration.

4.7.4 Foodchain Contamination

As part of its Foodstuffs Monitoring Program, LANL annually monitors foodstuffs (e.g., produce, fish, bees, honey) from various locations within LANL boundaries and from numerous perimeter and regional locations. The regional sampling locations are chosen to provide "background" data from areas that are not affected by LANL activities. Sampled foodstuffs are analyzed by LANL's Inorganic Trace Analysis Group (CST-9) for various heavy metals. The concentrations of trace heavy metals in each of the foodstuff media sampled were generally within expected ranges. Therefore, the potential for human exposure via foodchain contamination is very unlikely.

4.7.5 Description of SWMUs

The units addressed in this permit application are also designated as the following solid waste management units (SWMU):

SWMU	STRUCTURE	UNIT DESCRIPTION
16-010(b)	TA-16-387	FLASH PAD
16-010(c)	TA-16-388	BURN PAD
16-010(d)	TA-16-399	BURN PAD
16-010(e)	TA-16-401	FILTER VESSEL
16-010(f)	TA-16-406	FILTER VESSEL
16-010(j)	TA-16-394	BURN TRAY
16-012(a2)	TA-16-88	CONTAINER STORAGE

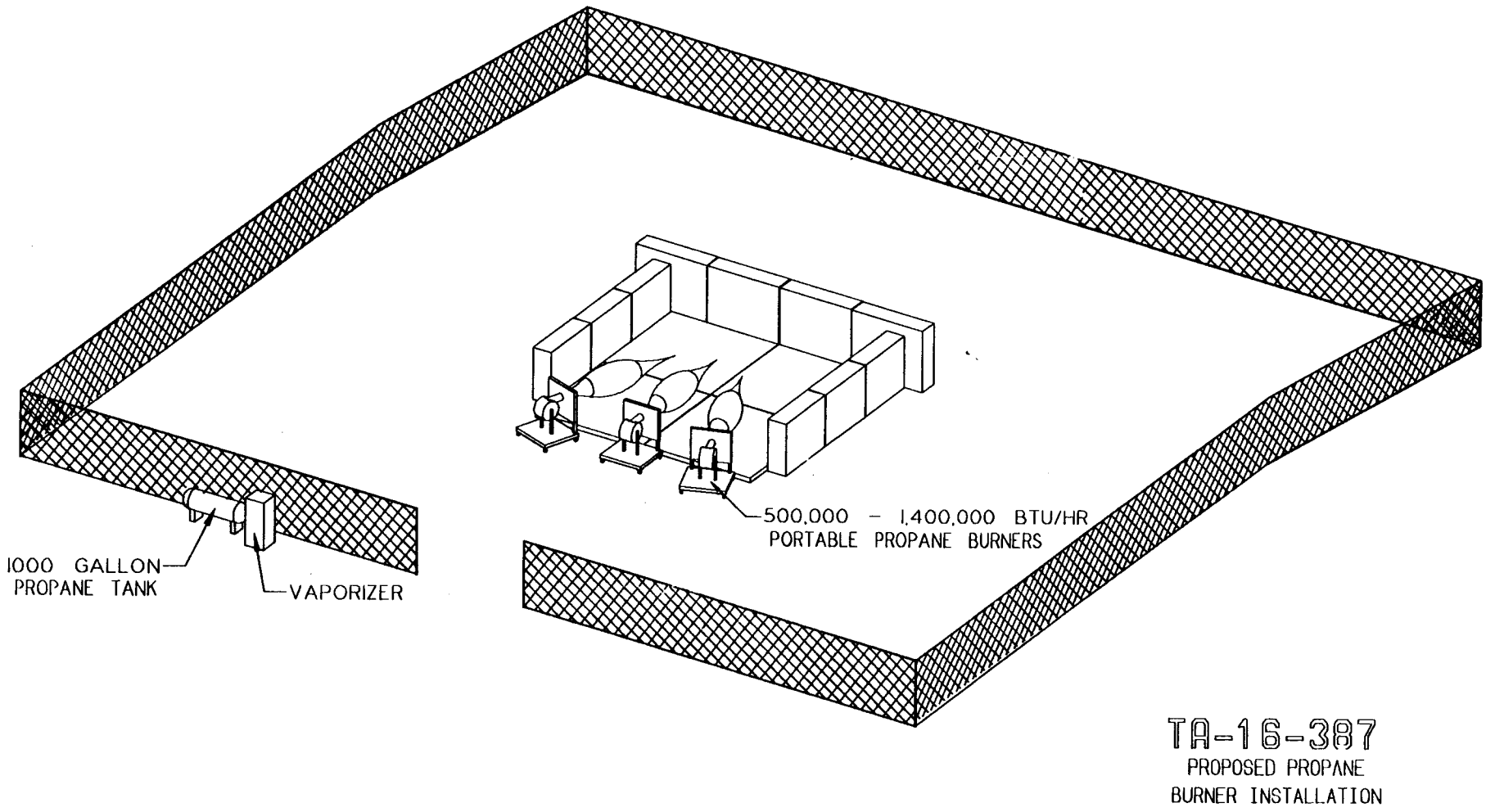

Figure 4-4

Schematic Drawing of and Proposed Modifications to the TA-16-387 Flash Pad

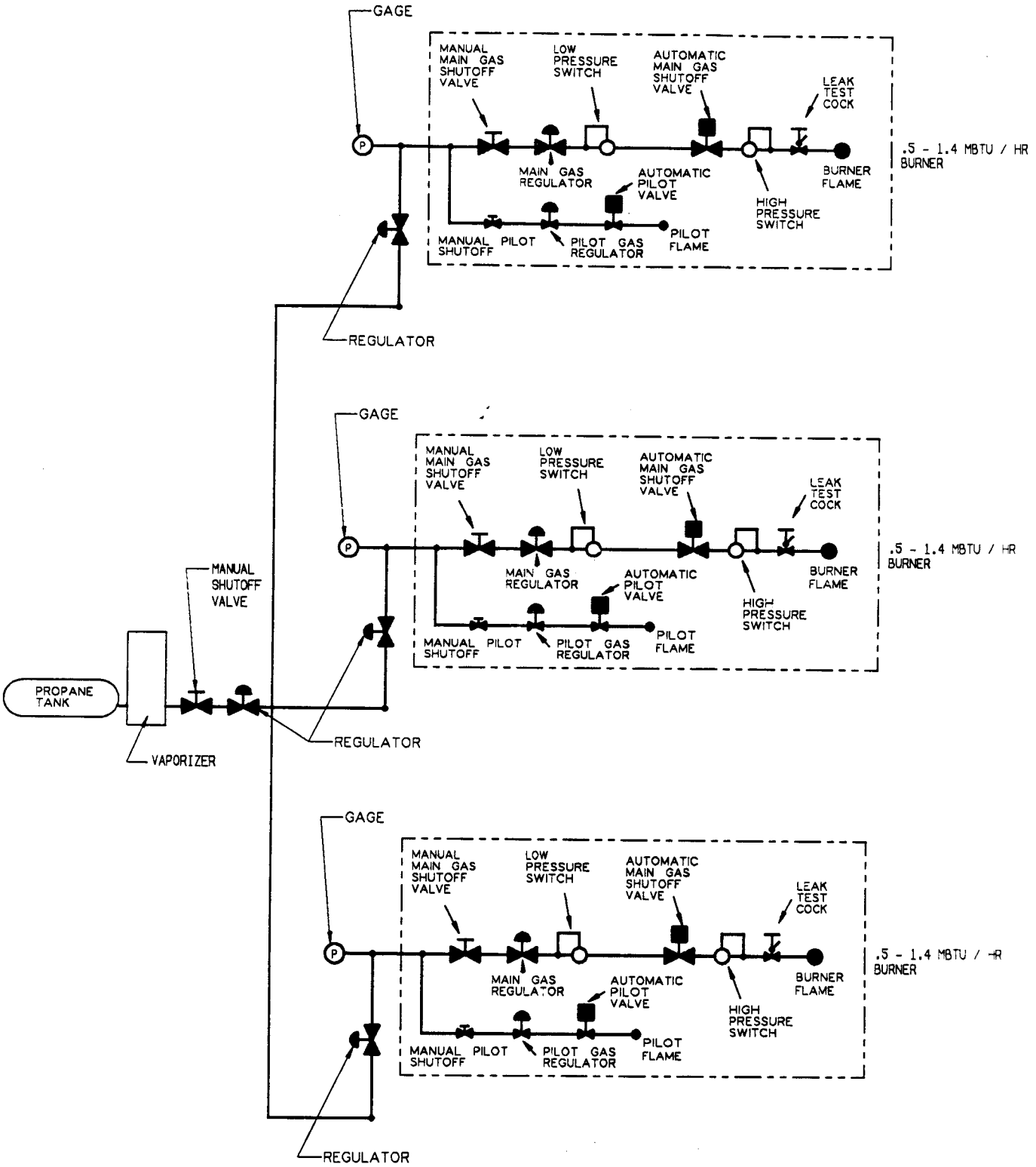

387 FLASH PAD
PROPANE PIPING

Figure 4-5

Piping and Instrumentation Diagram for the TA-16-387 Flash Pad

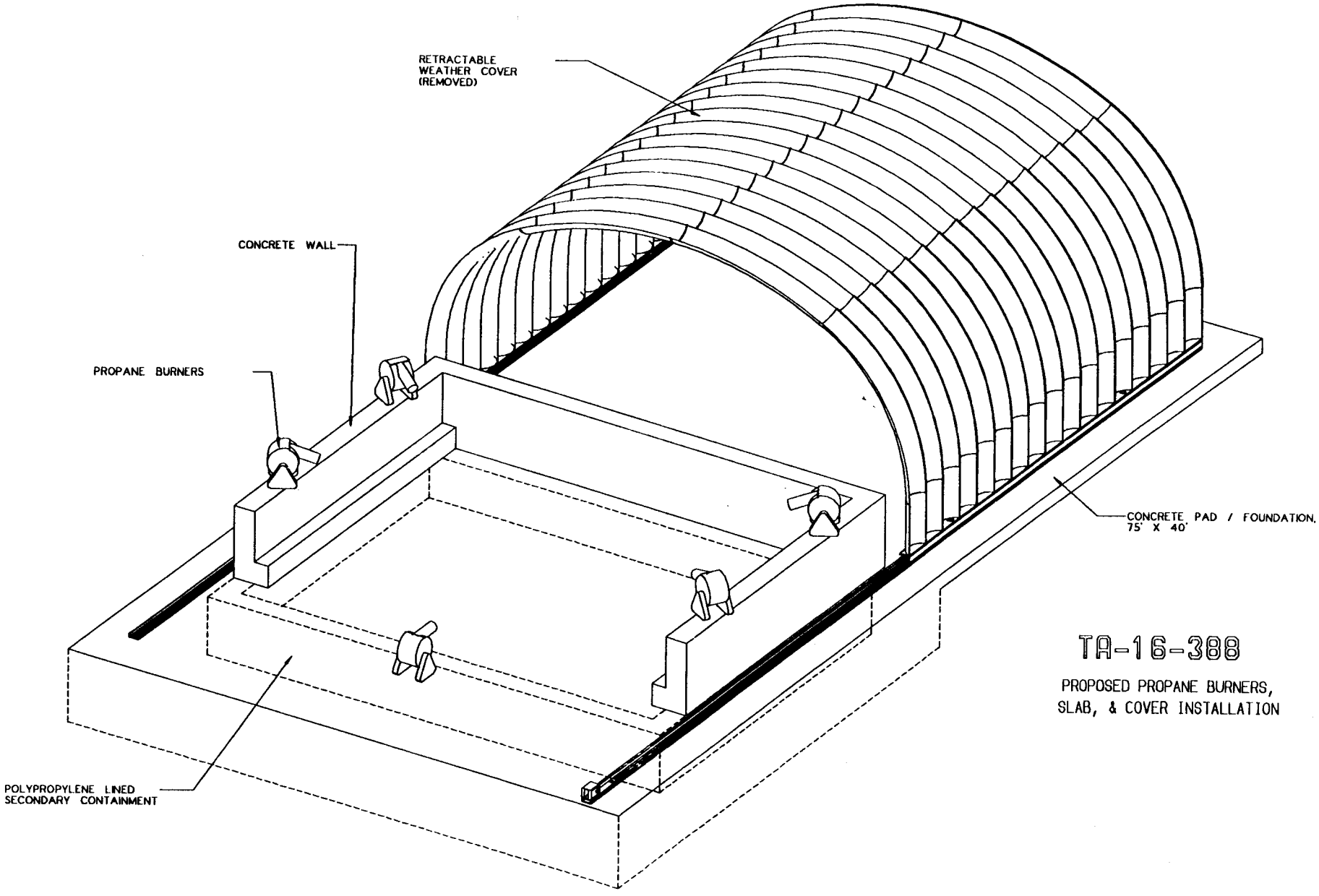

Figure 4-6

Schematic Drawing of the Planned TA-16-388 Flash Pad

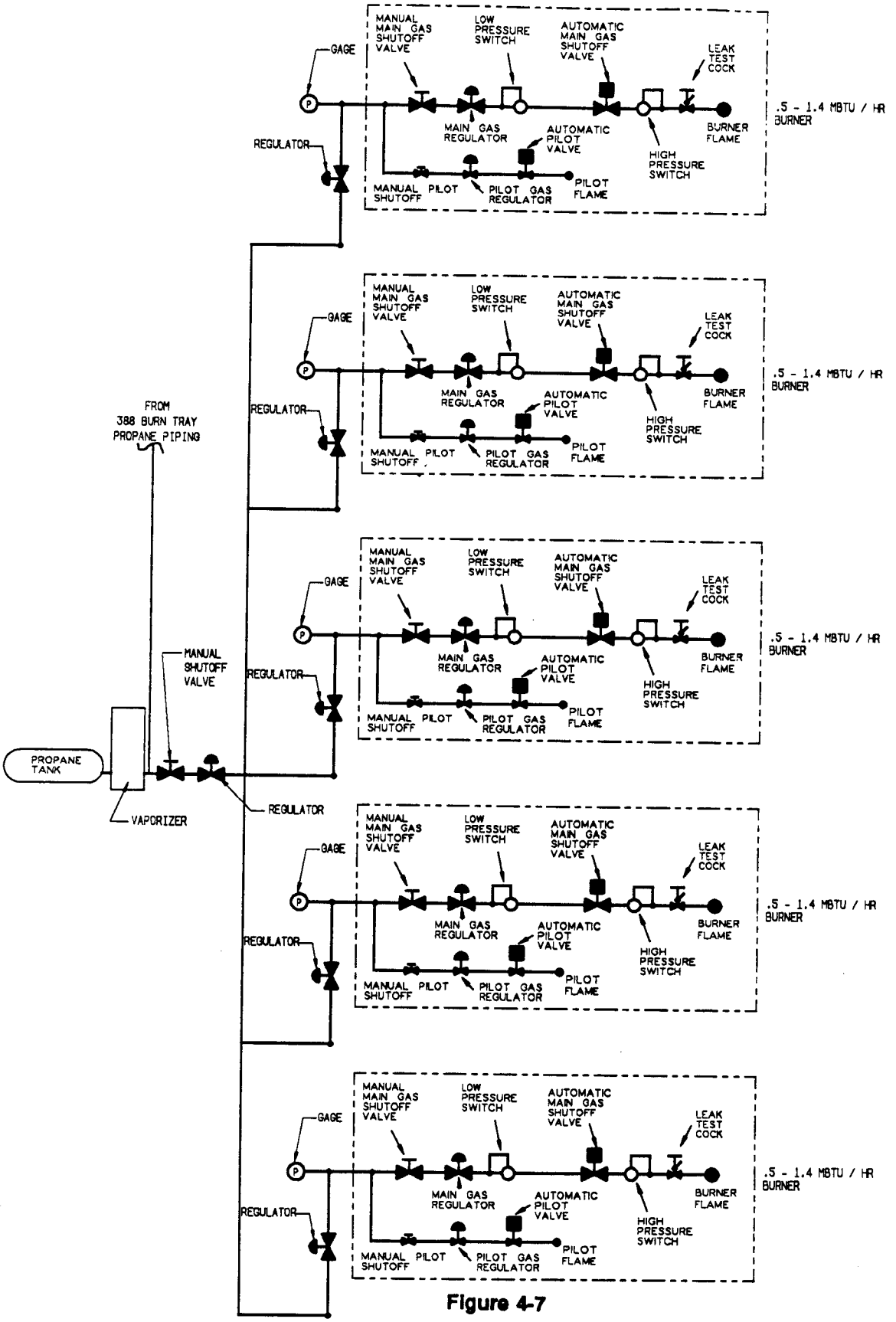

Figure 4-7

Piping and Instrumentation Diagram for the Planned TA-16-388 Flash Pad

388 FLASH PAD
PROPANE PIPING

NOTE:

THE BURN TRAY IS METAL & LINED WITH FIRE BRICK

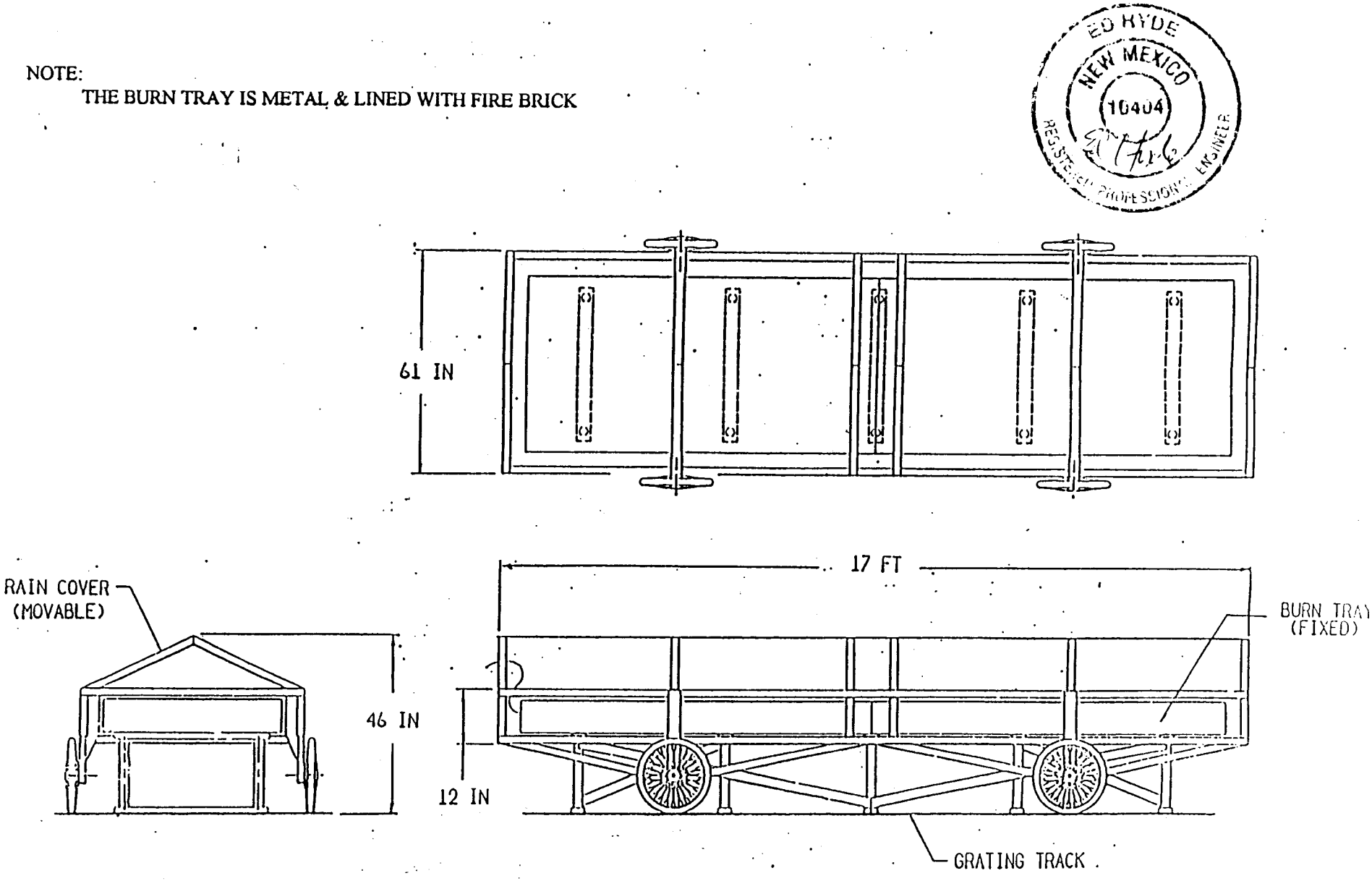

Figure 4-8

Schematic Drawing of the TA-16-388 and TA-16-399 Burn Pads

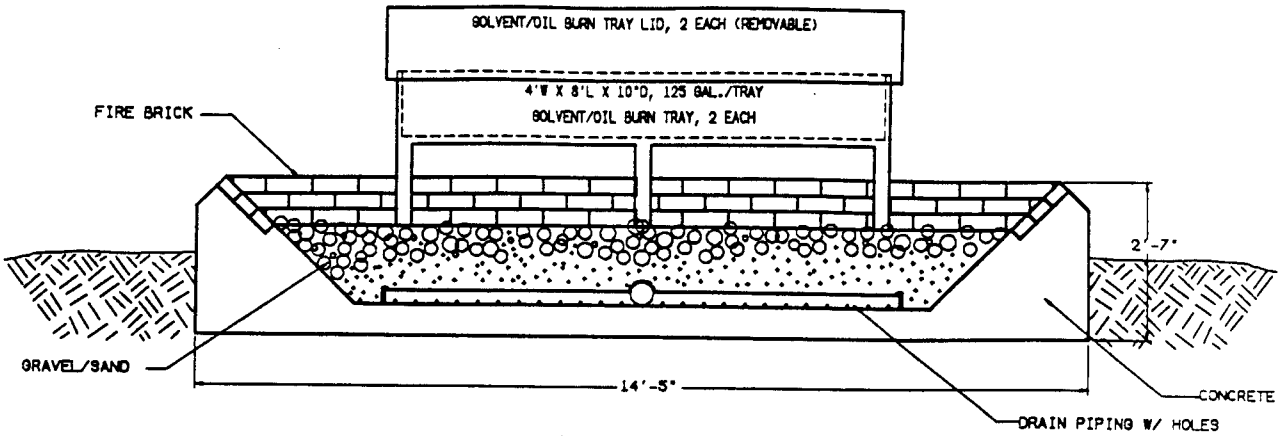

SECTION A-A VIEW

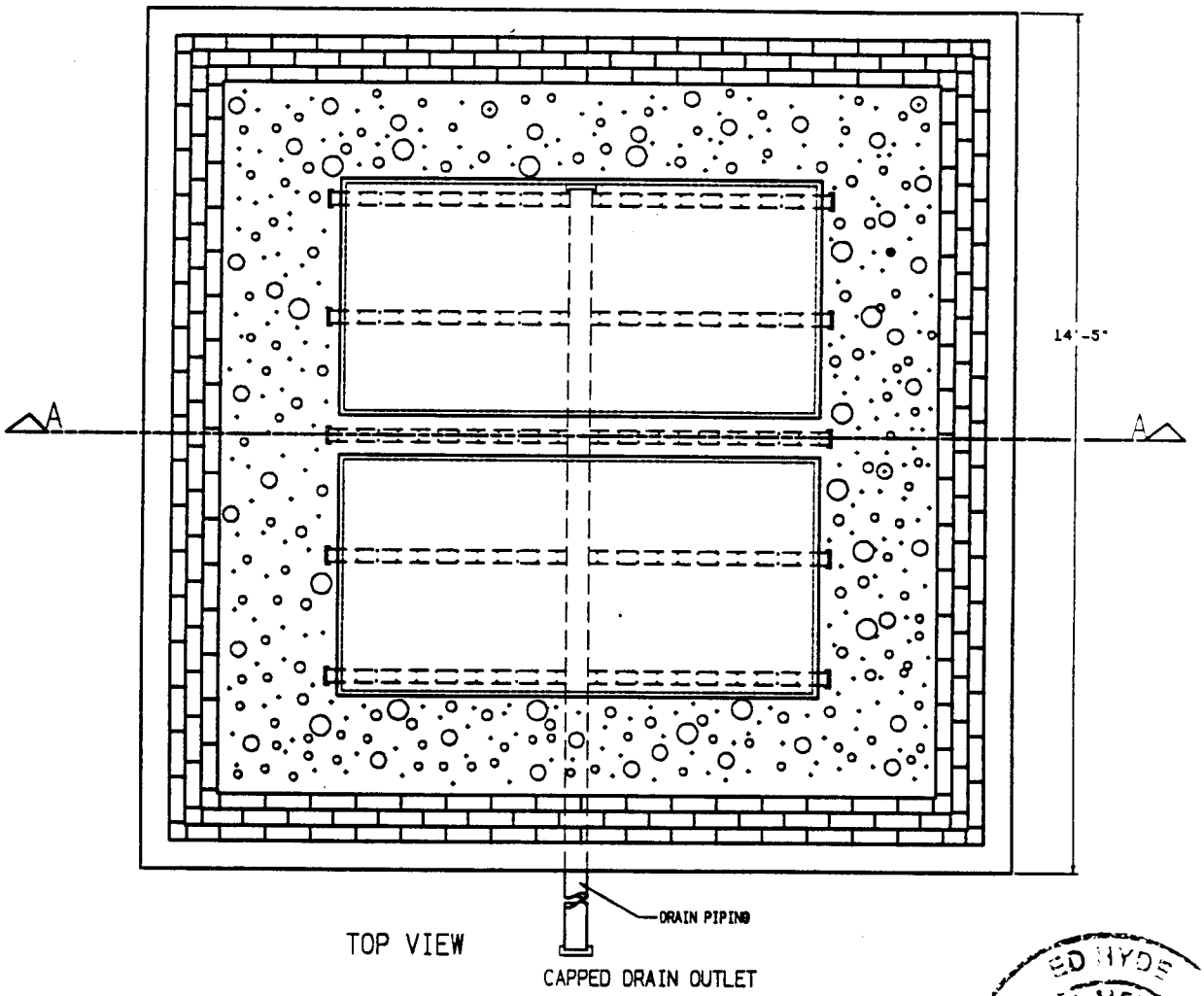

TOP VIEW

Figure 4-9

Schematic Drawing of the TA-16-394 Burn Tray

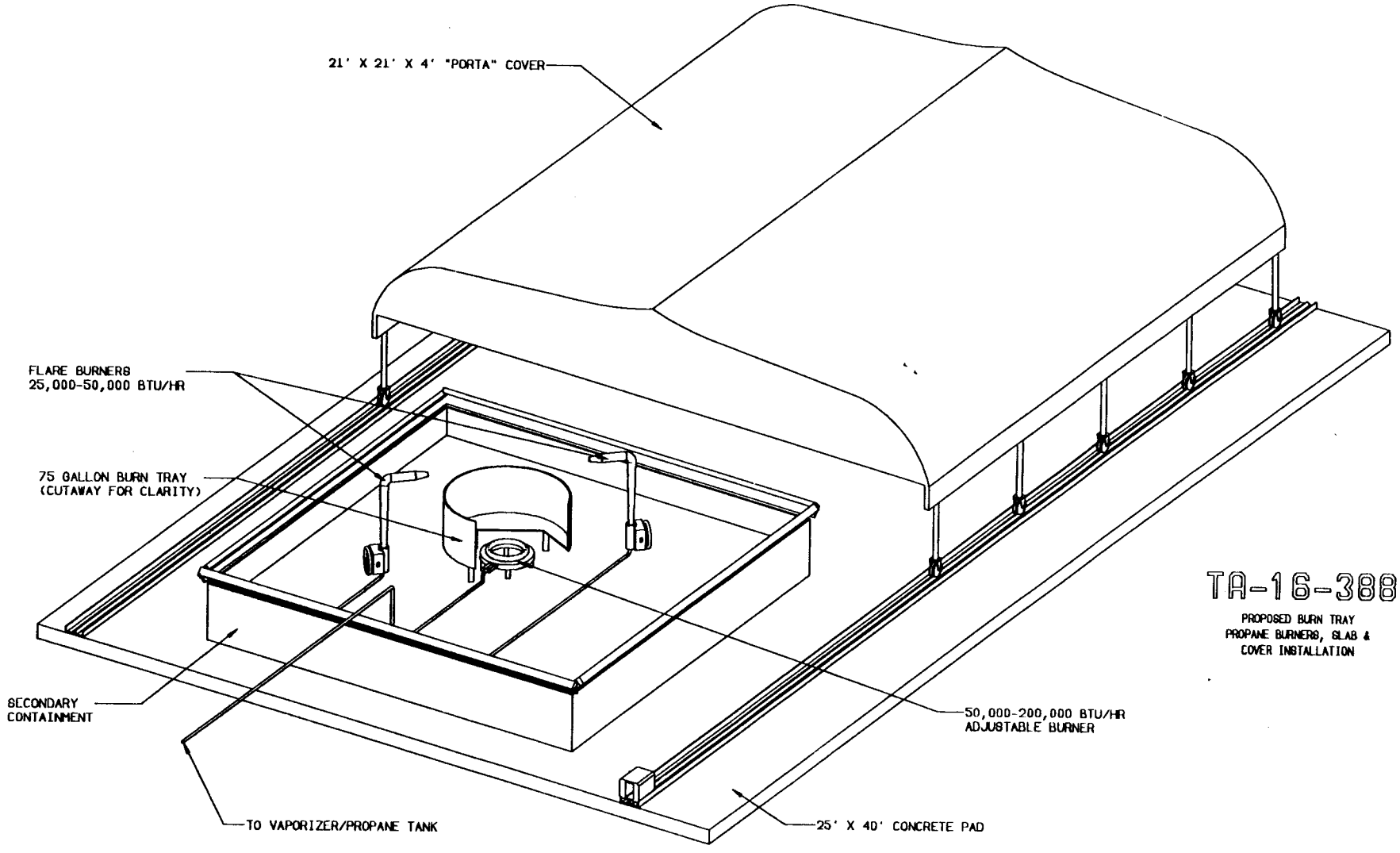

Figure 4-10

Schematic Drawing of the Planned TA-16-388 Burn Tray

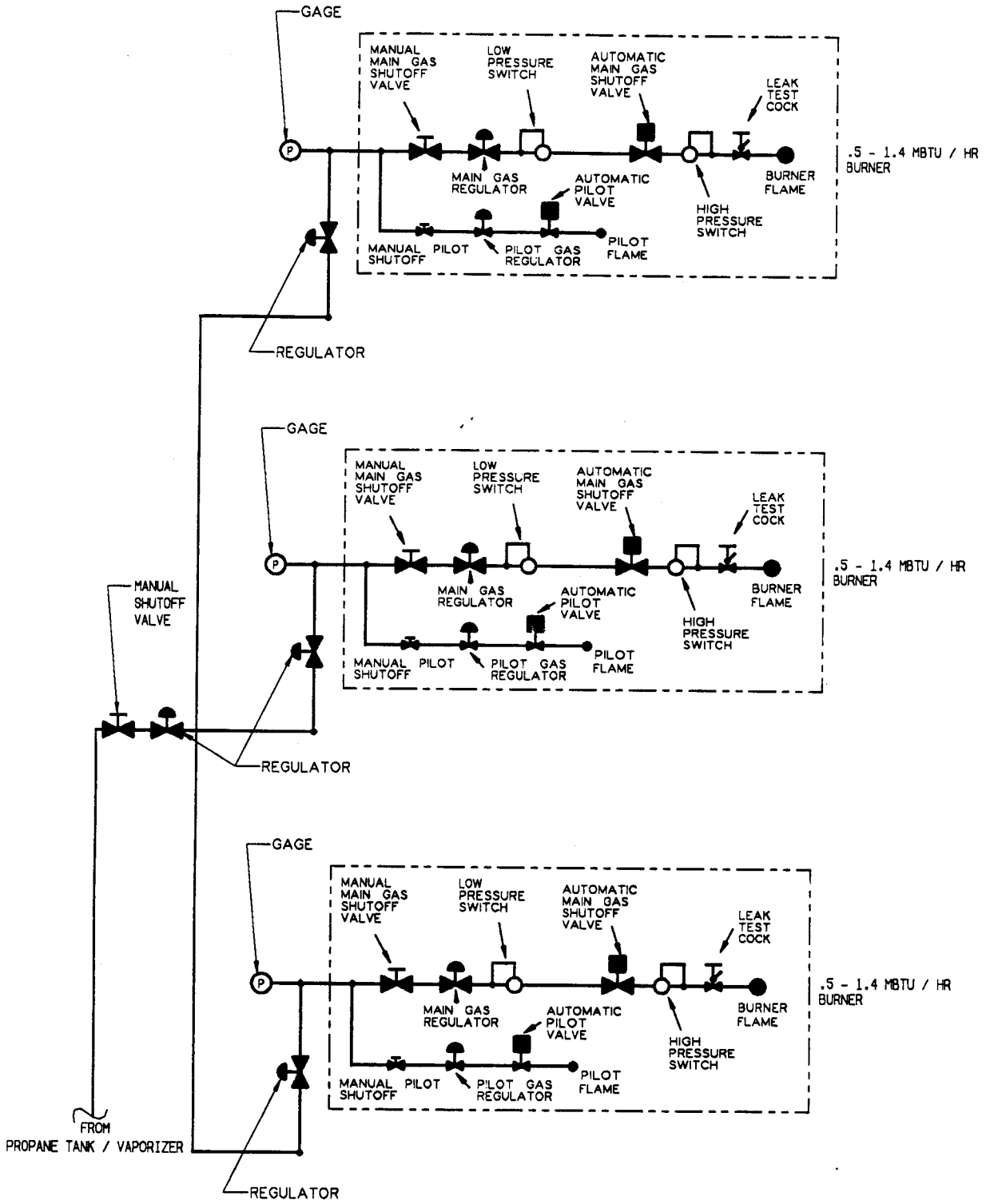

388 BURN TRAY
PROPANE PIPING

Figure 4-11

Piping and Instrumentation Diagram for the Planned TA-16-388 Burn Tray

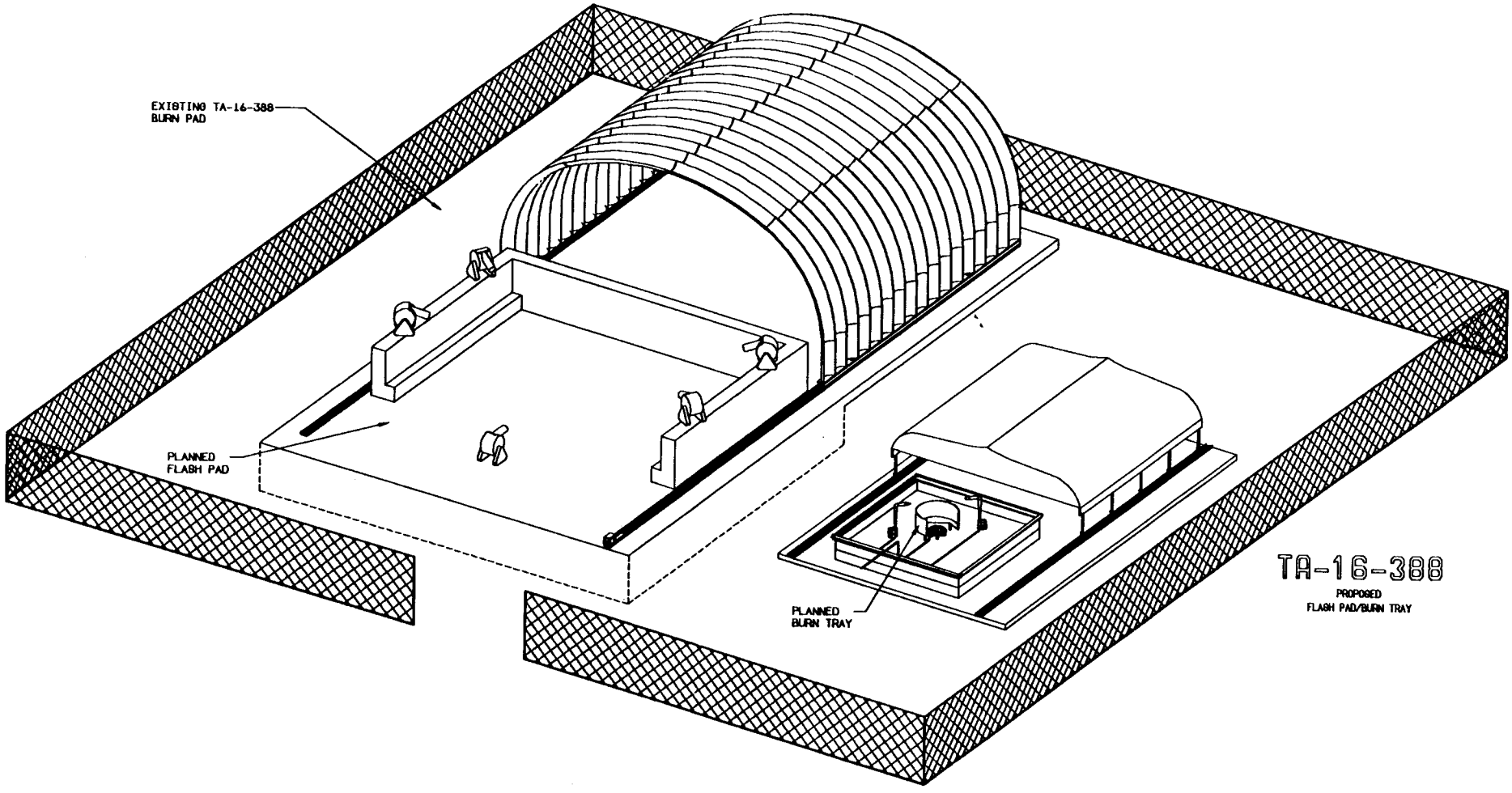

Figure 4-12

Schematic Drawing of the Planned TA-16-388 Flash Pad/Burn Tray

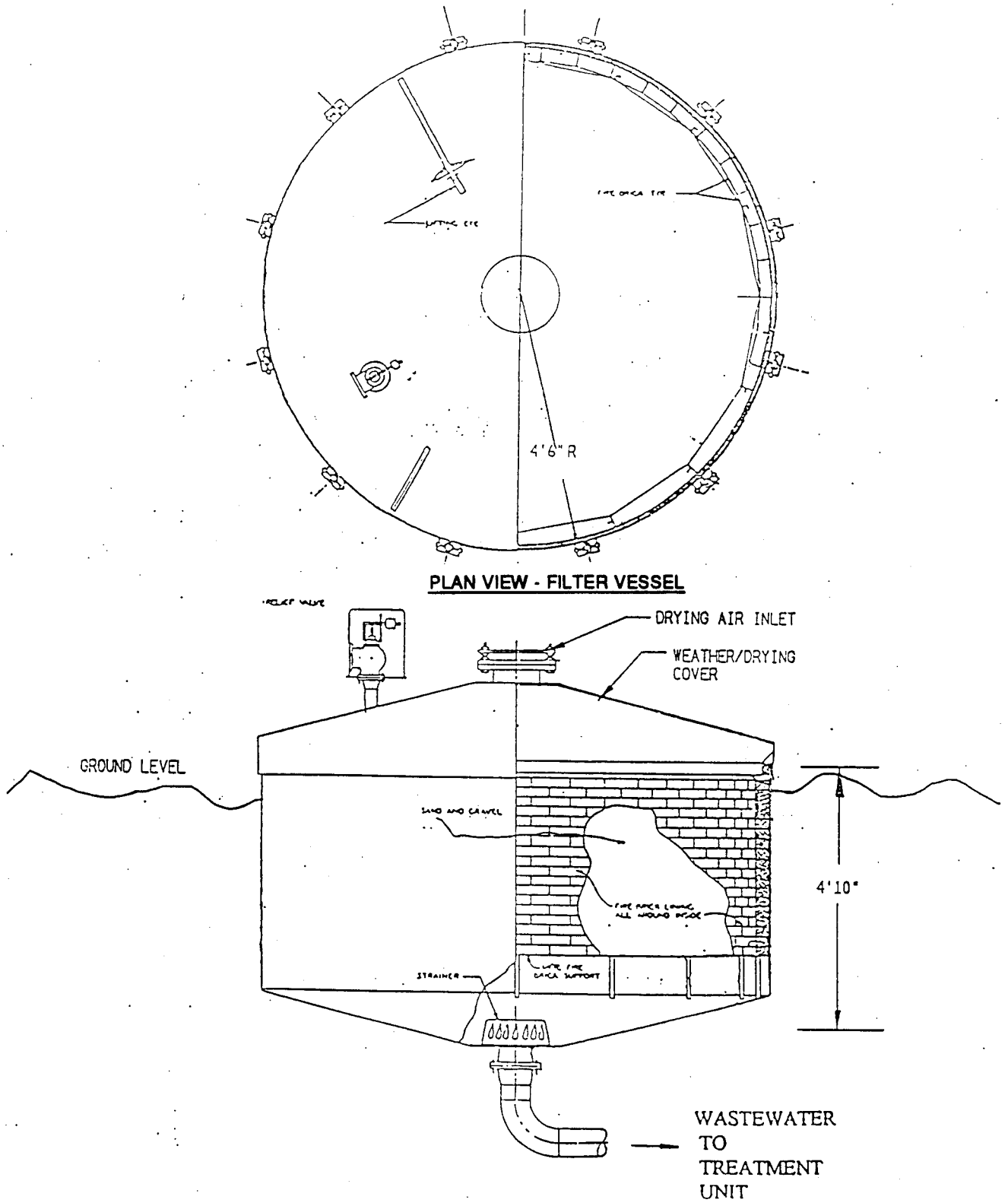

Figure 4-13

Schematic Drawing of the TA-16-401 and TA-16-406 Filter Vessels

ATTACHMENT 4-1

SUPPLEMENTAL AIR QUALITY INFORMATION

TECHNICAL APPROACH TO ESTIMATING EMISSIONS FROM HE CONTAMINATED SOLVENT AND OIL BURNING AT TA-16 SOLVENT BURN TRAYS AND THE AIR QUALITY IMPACTS OF THESE EMISSIONS

Flashing Pad

Air emissions from flash burning of HE contaminated materials result primarily from the combustion of the wood used to bring the unburnable material up to a temperature high enough to react or combust any HE present. A typical burn consists of approximately 800 to 1600 pounds of HE contaminated scrap lumber, uncontaminated scrap lumber, or wood pallets, approximately one-half gallon of kerosene and excelsior (or other appropriate material), 20-50 pounds of HE contaminated rags, paper, cardboard, plastics, packing material, and combustible firing site debris. Each burn is estimated to take 2 hours. Emissions from the flashing operation are estimated using emission factors developed by the Environmental Protection Agency (EPA) and published in AP-42, 1995, which includes; the combustion of wood in residential fireplaces with no emission control devices installed, the burning of municipal waste to account for any plastics or paper present, and the burning of distillate oil to account for the kerosene used as a starter aid. (Table 1).

TABLE 1, EMISSION ESTIMATES FOR FLASHING OPERATIONS

EMISSION SOURCE	CHEMICAL EMITTED	AVERAGE YEARLY EMISSIONS (lb/yr)	HOURLY EMISSIONS (lb/hr)
HE Contaminated Equipment Building Material Flashing			
1600 lb wood	CO	7275	101
	NOx	75	1
	SOx	12	0.2
	PM	996	14
0.5 gal kerosene	CO	0.1	0.001
	NOx	0.4	0.005
	PM	0.04	0.001
50 lb rags, paper, etc.	CO	77	1
	NOx	5	0.1
	SOx	1	0.01
	PM	14	0.2
TOTALS	CO	7351	102
	NOx	81	1
	SOx	12	0.2
	PM	1010	14

Liquid Burn Tray

In addition to flash burning operations, high explosives (HE) contaminated dilute solvents and lubricant oils are burned in a liquid burn tray at the TA-16 burn grounds. Approximately 2500 gallons per year of HE contaminated dilute solvents and lubricant oil are generated during HE processing operations at LANL. These solvents and oils are open burned in specialized solvent trays. Approximately forty-five burns per year, each consisting of up to 55 gallons make up the burn tray operations. An average make-up of the dilute solvent solution is 30% methanol, 25% water, 20% acetonitrile, 20% tetrahydrofuran, 5% of any the solvents in Table 2, and trace amounts of HE. When required to sustain burning of these liquids, a wood fire is built under the 3 foot tall tray to combust the HE contaminated liquids. These burns take approximately 4 hours each and require approximately 500 pounds of wood as kindling. The burning of pump oil contaminated with HE makes-up approximately 10% of the burns. Table 2 also gives the chemical properties and assumptions required for the emission calculations. Combustion emissions except for NOx were estimated from a study performed by A. Tewarson entitled Prediction of Fire Properties of Fuels, Factory Mutual Research Corporation, 1985 (Enclosure F). NOx emissions were estimated from emission factors provided in EPA's AP-42, Section 1.3 (Fuel Oil Combustion). Emissions from solvent burning and oil burning are shown in Table 3. Emissions from wood burning were again estimated from the combustion of wood in residential fireplaces with no emission control devices installed found in AP-42.

TABLE 2, CHEMICAL PROPERTIES OF SOLVENTS AND PUMP OIL

SOLVENT TYPE	MOLECULAR WEIGHT (g/mole)	DENSITY (g/ml)	NUMBER OF CARBONS	ASSUMPTIONS USED FOR CALCULATIONS
pump oil*	72	0.9050	5	**
methanol	32	0.7914	1	experimental data available
acetonitrile	41	0.7868	2	C_2 linear alkanes
tetrahydrofuran	72	0.8888	4	C_3-C_6 linear ketones
methyl ethyl ketone	72	0.8054	4	C_3-C_6 linear ketones
butyl acetate	116	0.8825	6	C_5-C_{10} acetate
ethyl acetate	88	0.9003	4	C_4 acetate
toluene	92	0.8669	7	experimental data available
ethanol	46	0.7893	2	experimental data available
acetone	58	0.7899	3	experimental data available
cyclohexane	84	0.7785	6	C_5 -C_{10} cyclo alkane

* Approximated as n-Pentane (C_5H_{12}).
** Used average of values given for linear, branched, and cyclic alkanes (paraffins).

TABLE 3, EMISSION ESTIMATES FROM HE CONTAMINATED SOLVENT AND LUBRICANT OIL BURNING

EMISSION SOURCE	CHEMICAL EMITTED	YEARLY EMISSIONS (lb/yr)	HOURLY EMISSIONS[a] (lb/hr)
HE Contaminated Solvent Burning			
55 Gallons of Dilute Solvent Approximately 41 burns annually Each burn lasts 4 hours	CO	17	0.1
	NOx	1478	9
	SOx	0	0
	PM[d]	243	2
HE Contaminated Lubricant Oil Burning			
55 Gallons of Lubricant Oil Approximately 4 burns annually Each burn lasts 4 hours	CO	7	0.4
	NOx	0	0
	SOx	0	0
	PM[d]	73	4
Additional Materials Used to Achieve Proper Combustion			
500 lb of Wood	CO	2842	16
	NOx	29	0.2
	SOx	5	0.03
	PM	146	1
0.25 Gallons of Kerosene	CO	0.06	0.0003
	NOx	0.2	0.001
	SOx	0	0
	PM	0.02	0.0001
TOTALS			
Solvent Burning	**CO**	**2574**	**16**
	NOx	**1505**	**9**
	SOx	**4.1**	**0.003**
	PM	**375**	**2**
Oil Burning	**CO**	**291**	**16**
	NOx	**3**	**0.2**
	SOx	**0.5**	**0.03**
	PM	**88**	**5**

[a] All numbers have been rounded to achieve the least number of significant digits.
[b] Lubricant oil burning accounts for approximately 10% of the burn tray operations.
[c] Tewarson estimates soot; for this discussion it is noted as PM.

Air Quality Impacts

Air quality regulations require that emissions from the burning operation must not impact ambient air quality standards set forth by federal statutes and adopted by the State of New Mexico. Operations of this type must meet ambient air standards for the criteria pollutants carbon monoxide (CO), oxides of nitrogen (NOx), sulfur dioxide (SO_2), and particulate matter (PM).

Air quality impacts of the combustion products CO, NOx, SO_2, and PM were assessed at the maximum impact point determined by the flash burning operations and at the nearest off-site receptor (State Road 4 bordering Bandelier National Monument) 1828 meters to the south for ambient air. Compliance with the standard was evaluated using the SCREEN 3 air emissions dispersion model. The SCREEN 3 model has been approved by the EPA as a screening procedure for estimating air quality impacts of stationary sources. SCREEN 3 is a conservative model which uses worst case meteorological data to determine emission impacts. The SCREEN 3 model assumes that emissions are from a continuous source or operation. Because open burning operations at TA-16 are intermittent with varying burn times, source terms supplied to the SCREEN 3 model were determined as follows:

- 1-hr impacts were estimated using the total emissions from a burn divided by the number of hours the burn lasted.
- 8 and 24-hr impacts were estimated by taking the 1-hr impact and multiplying it by constants developed by EPA (i.e. 0.7 and 0.4 respectively).

Results of this exercise as well as the parameters used are shown in Table 4. In addition, the heat released for the solvent oil burn was estimated to be 87030 cal/sec. The heat release for the flash burn was estimated to be 335948 cal/sec.

TABLE 4, AIR QUALITY IMPACTS FROM BURNING OPERATIONS

CHEMICAL POLLUTANT	MODELING PARAMETERS	AMBIENT AIR QUALITY STANDARD		MAXIMUM IMPACT 498 m	1828 m
CO	D Stability	8-hour average[1] 1-hour average[1]	8.7 ppm[2] 13.1 ppm	0.4 ppm 0.2 ppm	0.1 ppm 0.6 ppm
NOx	2.5 m/sec wind speed	24-hour average[1] Annual arithmetic average[3]	0.1 ppm 0.05 ppm	2E-03 ppm 0.002 ppm	6E-04 ppm 0.0003 ppm
SOx	Heat Release *Flash Burn*: 262176 cal/sec	24-hour average[1] Annual arithmetic average[3]	0.1 ppm 0.02 ppm	2E-04 ppm 7E-06 ppm	6E-05 ppm 2E-06 ppm
PM	*Solvent/Oil Burn*: 97674 cal/sec	24-hour average[1] 7-day average[4] 30-day average[4] Annual geometric mean[3]	150 $\mu g/m^4$ 110 $\mu g/m^4$ 90 $\mu g/m^4$ 60 $\mu g/m^4$	15 $\mu g/m^4$ N/E N/E 1 $\mu g/m^4$	5 $\mu g/m^4$ N/E N/E 0.2 $\mu g/m^4$

[1] 8-hour and 24-hour evaluations took the maximum 1-hour impacts from flash burning and multiplied by the factors of 0.7 and 0.4 respectively supplied by EPA for averaging time adjustments.

[2] To convert "ppm" to "$\mu g/m^3$," LANL uses the following formula:

$$\text{concentration in } \mu g/m^3 = \frac{\text{concentration in ppm x molecular weight}}{0.03}$$

[3] Annual arithmetic average and the annual geometric mean were derived by summing emissions from all burning operations and dividing by 8760 hours.

[4] The 7-day average and 30-day average were not evaluated.

N/E - No Evaluation Performed.

5.0 PROCEDURES TO PREVENT HAZARDS

The information provided in this section is submitted in accordance with the applicable requirements of the New Mexico Administrative Code, Title 20, Chapter 4, Part 1 (20 NMAC 4.1), Subpart IX, 270.14(b)(4), 270.14(b)(8), and 270.14(b)(9), and 20 NMAC 4.1, Subpart V, 264.14(b) and (c). The units addressed in this permit application are, or will be, designed and operated to minimize the possibility of fire, explosion, or unplanned releases of hazardous waste and/or hazardous constituents to any environmental medium. The following subject areas are addressed in this section: security; preparedness and prevention requirements; preventive procedures, structures, and equipment; and precautions for ignitable, reactive, or incompatible wastes.

5.1 TECHNICAL AREA (TA)-16 SECURITY [20 NMAC 4.1, Subpart IX, 270.14 (b)(4) and 20 NMAC 4.1, Subpart V, 264.14]

Security at TA-16 is maintained with both artificial and natural barriers. These barriers prevent the unknowing entry and minimize the possibility for unauthorized entry of persons or livestock into TA-16 and thus satisfy the requirements of 20 NMAC 4.1, Subpart V, 264.14(a) and (b)(2). A security fence surrounds approximately 50 percent of the perimeter of TA-16. Canyon walls and barbed wire surround the other 50 percent. The TA-16-88 container storage area addressed in this permit application is located within a high-explosives (HE)-exclusion area within TA-16. Access to TA-16-88 is along a fenced, ungated corridor with TA-16-54. The two existing open burn pads (TA-16-388, TA-16-399) and the existing flash pad (TA-16-387) located at TA-16 are each within a fenced area which can be locked if materials must be left on the pad for a period of time or while burned or flashed material is cooling. Fencing at TA-16-388 will remain in place when the burn pad is converted to a flash pad/burn tray area. Access to TA-16 is limited by a security force which is present 24 hours a day. The burning ground is routinely patrolled by security personnel. The entry station is manned during operational hours. Appropriate entry and egress procedures are followed during manned, unmanned and emergency situations at TA-16. The gates and the area are patrolled by Los Alamos National Laboratory (LANL) security during nonoperational hours to ensure that fence integrity has not been breached. The locations of the security fence, entry gates, and entry station are shown on Figures 5-1 and 5-2.

Bilingual (i.e., English and Spanish) warning signs are posted on the fences surrounding the burn areas at approximately 50-foot (ft) intervals and can be seen from any approach to this area. The legends on the signs indicate "Danger-Hazardous Materials," "Authorized Persons

Incompatible wastes, if stored at the container storage area in TA-16-88 or managed at the TA-16 open burn units, will be segregated to prevent adverse reactions from occurring through commingling of the wastes. In addition, no incompatible wastes will be mixed, and no waste will be placed in a container that previously held an incompatible waste, as required by 20 NMAC 4.1, Subpart V, 264.177(a) and (b), and 20 NMAC 4.1, Subpart IX, 270.15(d). If incompatible wastes are stored in the container storage area in TA-16-88, the requirements of 20 NMAC 4.1, Subpart V, 264.177(c), will also be met. Only containers made of or lined with materials that will not react with and are otherwise compatible with the waste to be stored will be used at the TA-16-88 container storage area and the TA-16 open burn units.

Specific precautions to prevent accidental ignition or reaction of ignitable, reactive, or incompatible wastes at the TA-16 open burn units are provided in the SOPs for TA-16 (see Appendices C through J).

5.5 SUPPORT AGREEMENTS WITH OUTSIDE AGENCIES [20 NMAC 4.1, Subpart V, 264.37(a)]

The U.S. Department of Energy maintains support agreements, contracts, and a memorandum of understanding for emergency response assistance at LANL with outside response agencies. LANL maintains contracts with additional response groups for security, site access, and maintenance support during emergency response. These agreements are presented in the contingency plan, Section 7.0, of this permit application.

5.6 VOLATILE ORGANIC AIR EMISSION STANDARDS

The Code of Federal Regulations, Title 40 (40 CFR), Part 264, Subpart CC, addresses standards for volatile organic emissions after the effective date of regulations. The standards are designed to reduce organic vapor emissions from hazardous wastes containing bulk or small quantities of solvents, such as toluene, methylene chloride, methyl ethyl ketone, acetone, benzene, trichloroethylene, or chloroform. Subpart CC requirements apply to owners and operators of facilities that treat, store, or dispose of hazardous waste in containers, tanks, surface impoundments, and miscellaneous units. Filter Vessels 401 and 406, described in this permit application, are miscellaneous units used to treat hazardous waste; they are similar to tanks by Resource Conservation and Recovery Act definition.

As currently set forth by the U.S. Environmental Protection Agency (EPA) (59 *Federal Register* 62896), Subpart CC standards for containers, tanks, and surface impoundments require that all affected units be equipped with and operate emission controls or procedures

unless the hazardous waste placed in the unit is determined to meet either of the following conditions:

- the average volatile organic concentration of hazardous waste at the point of generation is less than 100 parts per million by weight (ppmw), or
- the waste has been treated to reduce the organic content by methods stipulated in the rule.

Acceptable knowledge supported by existing documented data (e.g., chemical oxygen demand [COD] data) is used to determine that the sludge treated in Filter Vessels 401 and 406 is not subject to Subpart CC requirements. Filter Vessels 401 and 406 are used to treat HE-contaminated sludge by filtering the sludge through a sand/gravel filter bed. Volatile organics are not routinely introduced to this waste stream. Any incidental solvents in this waste stream would likely remain in the liquid that passes through the filter bed into a fluid drain at the base of the filter vessel. The liquid then goes to the nearby waste water treatment unit for further treatment. Currently, samples collected prior to further treatment are routinely analyzed. These data show that the average organic matter content of the waste (i.e., all organic matter, including volatile organic compounds) is significantly less than 100 milligrams per liter (mg/L). Beginning in 1996, samples of the sludge entering the filter vessels will be collected and analyzed for COD.

Acceptable knowledge (i.e., volatile organics are not routinely introduced to the sludge waste stream) supported by existing documented data (i.e., the average total organic matter content of the filtered liquid is below 100 mg/L [ppm]) indicates that Filter Vessels 401 and 406 are not subject to Subpart CC requirements. Additional documented data to be collected on sludge samples entering the filter vessels will also be used to demonstrate that the filter vessels are not subject to the requirements of Subpart CC.

6.0 INSPECTION PLAN

In accordance with the New Mexico Administrative Code, Title 20, Chapter 4, Part 1 (20 NMAC 4.1), Subpart V, 264.15, "General Inspection Requirements," this section presents inspection requirements for the hazardous and mixed waste container storage area and the hazardous waste open burn units at Technical Area (TA) 16 at Los Alamos National Laboratory (LANL). Inspection schedules for the units addressed in this permit application have been developed to identify equipment malfunctions and deterioration, operator errors, and discharges that might cause or lead to a release of hazardous or mixed waste and pose a threat to human health and the environment. As specified in 20 NMAC 4.1, Subpart IX, 270.14(b)(5), a copy of the general inspection schedule is being submitted with this Resource Conservation and Recovery Act permit application. Inspections will be conducted often enough to identify problems in time to correct them before they harm human health or the environment. Attachment 6-1 also gives problem-specific inspection instructions for each process or piece of equipment.

6.1 GENERAL INSPECTION SCHEDULES AND REQUIREMENTS [20 NMAC 4.1, Subpart IX, 270.14(b)(5); 20 NMAC 4.1, Subpart V, 264.15(a),(b), and (c)]

In accordance with the requirements of 20 NMAC 4.1, Subpart IX, 270.14(b)(5), and 20 NMAC 4.1, Subpart V, 264.15(a), (b), and (c), a written inspection schedule has been developed at LANL. This schedule will be followed for the inspection of monitoring equipment, safety and emergency equipment, security devices, and operating and structural equipment that are important to preventing, detecting, and responding to environmental or human health hazards. The inspection schedule and copies of inspection records will be maintained at the facility by LANL's Hazardous and Solid Waste Group (ESH-19) and the site operator.

Inspection schedules outlining the items to be addressed on LANL's Hazardous and Mixed Waste Facility Inspection Record Form (IRF), as well as inspection frequencies, are provided in Section 6.2 for the unit types addressed in this application. The IRF and instructions for its completion are provided as Attachment 6-1. The activities discussed below are addressed according to the specified regulatory requirements as well as according to existing LANL inspection requirements for hazardous and mixed waste units.

Block Number	Item(s)
13	Structural integrity of containers
14	Covers/lids of containers
15	Warning signs
16	Labels
17	Accumulation start date
18	Run on/off control
20	Security
21	Site lighting
22	Secondary containment structures
23	Appropriate aisle space and stacking
24	Appropriate container segregation
25	Hose bibs, water supply (if applicable)
27	Road/work surfaces
28	Wind sock (if applicable)
30	Pallets (if applicable)
33	Spill control, fire, and emergency equipment
39	Radiation safety
40-48	General information

6.3 INSPECTION SCHEDULE AND REQUIREMENTS FOR OPEN BURN UNITS [20 NMAC 4.1, Subpart V, 264.15(b) and 264.602]

The open burn units located at TA-16 will be inspected according to the schedule provided below. Inspection frequencies are adequate based on the deterioration rates of equipment/systems and the probability of harm to human health or the environment if failure of the equipment/systems or any operator error goes undetected between inspections.

6.3.1 Daily Inspection Requirements

Daily inspections will be conducted each day of operation (i.e., every day that waste is in a burn area and/or that waste treatment by open burning occurs). For the daily inspection of the open burn units, the items in the following blocks on the IRF will be addressed:

Block Number	Item(s)
1-5	General information
7	(Un)loading area
8	Communication equipment

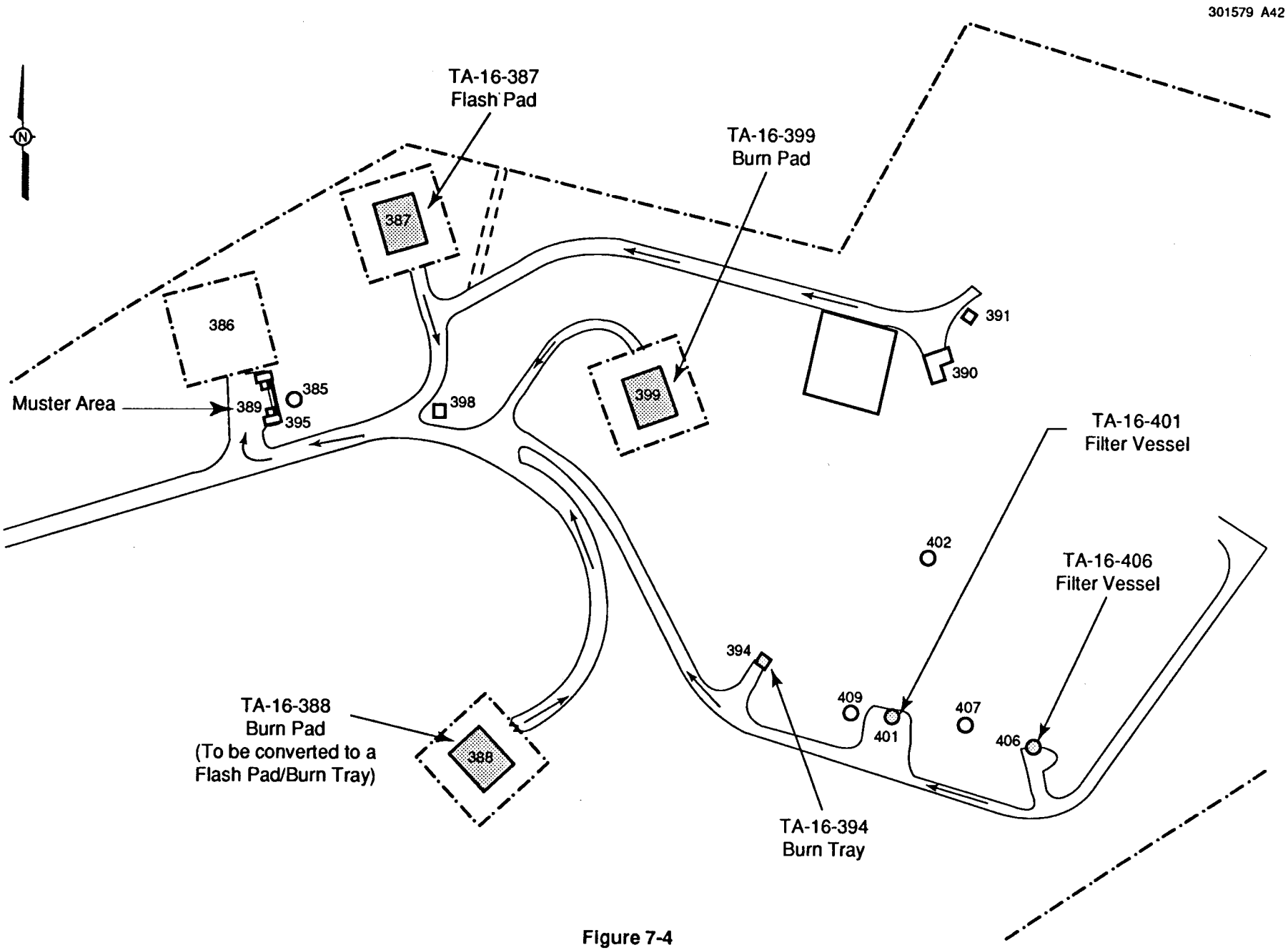

Figure 7-4
Evacuation Routes and Assembly/Muster Area at Technical Area (TA) 16 Burn Ground

- Detectable hazardous waste or constituents from container storage activities in the final sample are at or below levels negotiated with NMED.

- Detectable hazardous waste or constituent concentrations from container storage activities do not significantly decrease after several washdowns.

9.3 CLOSURE PROCEDURES FOR THE OPEN BURN UNITS AT TA-16 (TA-16-387, -388, -394, -399, -401, and -406) [20 NMAC 4.1, Subpart V, 264.112]

Units used to burn high-explosives (HE) waste at TA-16, as shown on Figure 9-4, include three general types. The first type of open burn unit consists of a concrete pad on which HE or HE-contaminated equipment is placed and remotely burned or flashed. There are three such pads at TA-16, measuring 30- by 30-feet (ft) square. Each pad is located at the center of a 100- by 100-ft square area enclosed by a cyclone fence. The surfaces of the pads slope from the center to the edge. These are dedicated to wastes that can be burned or flashed without detonation, although unplanned detonations have occurred. These units at TA-16 include a flash pad, designated as TA-16-387, and two burn pads, designated as TA-16-388 and TA-16-399. Burn Pad 388 will be converted to a flash pad/burn tray area at TA-16-388. Flash Pad 387 will undergo closure following closure activities at Material Disposal Area (MDA) P and relocation of flashing operations to the flash pad/burn tray area at TA-16-388.

The second type of open burn unit at TA-16 consists of a concrete, brick-lined, gravel and sand-filled burn tray on which two smaller metal pans are located. The brick-lined, gravel and sand-filled burn tray serves as secondary containment for the burn pans, as described in Section 4.5 Waste HE-contaminated fluids are poured into the smaller pans and remotely ignited. This unit at TA-16 is designated as TA-16-394. Burn Tray 394 will undergo closure after the operations at this unit have been relocated at the TA-16-388 flash pad/burn tray area.

The third type of open burn unit at TA-16 is used to burn HE-contaminated wastewater sludges. These units consist of steel cone-shaped vessels having a diameter of about eight feet, buried with only the upper three to four feet of the vessel above ground. The steel vessels are filled with sand and gravel and an open fluids drain is located at the bottom of the cone. HE wastewater sludge is gravity fed from vacuum trucks into the top of the cone, onto the sand and gravel bed. A heavy steel cap is then placed over the top of the cone and hot air is forced into the cone through air ducts. The hot air dries the waste sludge and liquids from the sludge filter downward through the sand and gravel bed and through the fluids drain. Effluent from these drains is regulated by a National Pollutant Discharge Elimination System permit (NMR00A384). When the remaining explosive material is relatively free of moisture, the

steel cap is removed from the cone and the filter surface residue is ignited remotely. Two units of this type at TA-16 referred to as filter vessels are designated as TA-16-401 and TA-16-406.

Baseline characterization of the TA-16-387 and TA-16-394 open burning areas was conducted according to a plan developed by the Engineering Sciences and Applications (ESA) Division and ESH-19.

9.3.1 Estimate of Maximum Waste in Storage

Waste that may be treated at the TA-16 open burn units is held at satellite or less-than-90-day accumulation areas at the point of generation prior to treatment. At Burn Pads 388 and 399 and at Filter Vessels 401 and 406, the maximum amount of waste that may be treated at one time is approximately 1,000 pounds (454 kilograms). At Flash Pads 387 and 388, the maximum amount of waste that may be treated per burn is 40,000 pounds (18,182 kilograms). At Burn Tray 388, the maximum amount of waste that may be treated per burn is 100 gallons. For Burn Tray 394, the maximum amount of waste that may be treated per burn is 250 gallons. Ash awaiting analytical data and residual barium-contaminated sand may be held in temporary storage (less than 90 days) in drums at the open burning units.

9.3.2 Description of Waste

The flash pads (TA-16-387 and -388) and the burn pads (TA-16-388 and TA-16-399) are used to treat scrap HE and equipment and waste that have contacted HE and are considered to be contaminated. HE that have been burned include cyclotetramethylenetetramine (HMX), cyclonite (RDX), 2, 4, 6-trinitrotoluene (TNT), pentaerythritol tetranitrate (PETN), ammonium nitrate, barium nitrate, triaminotrinitrobenzene (TATB), nitrocellulose, tetryl, nitroguanidine, and various plastic binders. These wastes are transferred to the site by trucks. Waste and HE scrap are containerized. Large equipment is wrapped to ensure containment.

The burn trays (TA-16-394 and -388) handle waste oils and solvents that are considered to be contaminated with HE. Small volumes are handled in metal containers, and the contents are poured by hand into the burn pans.

The waste handled at the filter vessels (TA-16-401 and TA-16-406) is HE-contaminated wastewater delivered to the site with a vacuum truck and drained from the truck through a hose into the vessel.

Burning HE material wastes can leave a residual material that is toxic for barium. The concentration of barium in the residual material varies with the concentration of barium nitrate in the waste. Burning HE material wastes can also leave a residual material that is toxic for other RCRA-characteristic metals.

9.3.3 Removal of Waste

All wastes will be treated or removed from the open burn unit scheduled to be closed prior to the initiation of closure activities. Containers and packaged waste may be removed from the unit with container-handling equipment. Small containers may be handled manually or with a dolly. Flatbed trucks or trailers may be used for transport of the wastes. All appropriate shipping papers will accompany the wastes during transport. RCRA-regulated wastes will be moved to an approved on-site facility or permitted off-site treatment and/or disposal facility.

9.3.4 Closure Procedures and Decontamination

To the extent possible, all contaminated structures and equipment at the open burn units addressed in this section will be decontaminated and removed. Structures, equipment, and media that cannot be decontaminated will be containerized and managed in compliance with appropriate regulations. All sampling conducted during closure and decontamination procedures will be done in accordance with QA/QC procedures (see Section 9.1.8).

Before proceeding with any closure activities, the units and all associated structures and equipment will be surveyed for radiological contamination. PPE and monitoring requirements will be determined by ESH-1 and ESH-5 following a field inspection. Radiation and chemical monitoring will occur throughout closure activities. If any contamination is found, the contaminated material will be decontaminated (if possible) or containerized and taken to an approved storage location at LANL appropriate for the waste type.

Personnel involved in closure activities will wear appropriate PPE and will follow good hygiene practices to protect employees from exposure to hazardous waste. The level of PPE will depend upon the level of chemical contamination detected, if any. Minimum PPE requirements will consist of coveralls, steel-toed boots, and safety glasses or face shields. If an overhead danger is present, a hard hat will be worn. All workers involved in closure activities will be required to have training and medical monitoring. Contaminated PPE will either be decontaminated or managed in compliance with appropriate regulations.

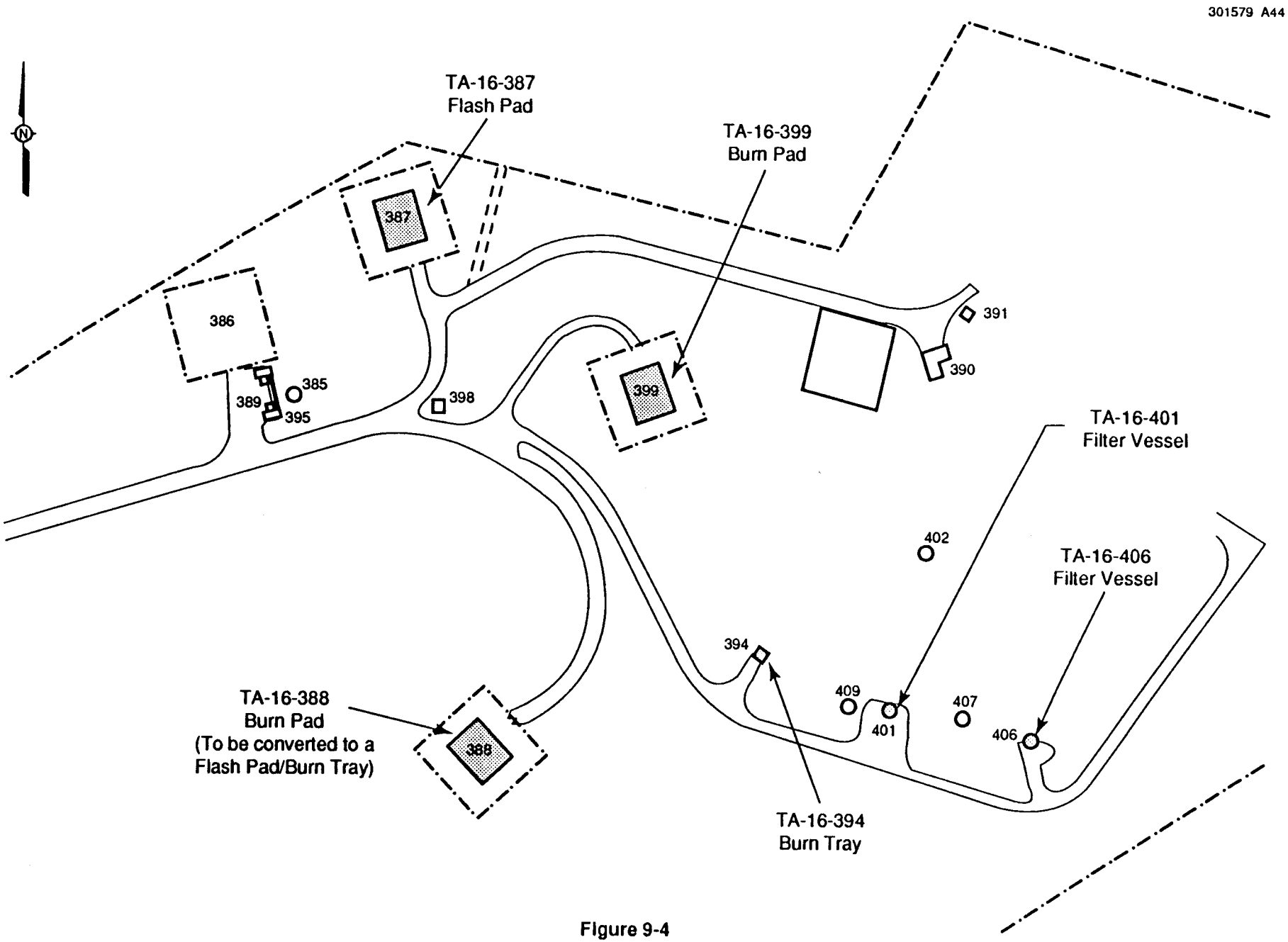

Figure 9-4
Simplified Schematic of Burn Ground at Technical Area (TA) 16

It was formerly used to burn high-explosives (HE)-contaminated equipment and waste HE but is currently used as a storage area (LANL, 1990; LANL, 1993a).

TA-16-387 is a flash pad that was constructed in 1951. It is an active RCRA unit; however, flashing operations will be relocated to the TA-16-388 flash pad/burn tray area. The TA-16-387 flash pad will undergo closure after closure activities at MDA P are completed. The pad/burn area consists of a layer of sand several inches thick in a 100- by 100-ft fenced area. The pad is used for flash burning HE-contaminated material under RCRA interim status requirements. The unit is identified as SWMU No. 16-010(b) in Module VIII.

TA-16-388 and TA-16-399 are burn pads. These active RCRA units are used to burn HE scrap under interim status requirements; a permit is being sought for Burn Pad 399 through this permit application. (Burn Pad 388 will be converted into a flash pad/burn tray area.) Currently, these 100 foot (ft) long by 100 ft wide enclosed areas each consist of a concrete pad, used for unloading explosives, and an elevated metal tray. Each burn tray is 2 ft above the ground and is 16 ft long by 4 ft wide. HE is placed on the tray and burned. Each tray has a metal-covered rain guard that can be rolled back to expose the tray. TA-16-388 and TA-16-399 are identified as SWMU Nos. 16-010(c) and 16-010(d), respectively, in Module VIII.

TA-16-392 is a former filter bed that was constructed in 1951. The unit was converted to a burn pad in 1988 for the purpose of burning suspected uranium-contaminated objects (LANL, 1993a). The unit is identified as SWMU No. 16-010(i) in Module VIII.

10.1.2 Filter Beds/Filter Vessels

The former location of a filter bed (TA-16-393) is identified as SWMU No. 16-005(g) in Module VIII. The unit received HE-residue wash water from the basket wash facility (see Section 10.1.6) and drained the filtered wash water to an adjacent area. TA-16-393 was decommissioned and removed in 1965.

TA-16-394 is a filter bed that was built in 1951 to receive HE-residue wash water from the basket wash facility. A pipe drained the filtered wash water to the adjacent area southeast of the bed. The filter bed has been modified and now consists of a 12 ft long by 12 ft wide by 1 ft deep metal tray filled with 6 to 8 inches of sand. This burn tray contains two elevated shallow steel pans. Oil and solvents contaminated with HE are poured into the trays and burned. This active RCRA unit operates under interim status requirements and is identified as SWMU

No. 16-010(j) in Module VIII. TA-16-394 burn tray operations will be relocated to the TA-16-388 flash pad/burn tray area and the TA-16-394 unit will subsequently undergo closure.

TA-16-401 and TA-16-406 are steel filter vessels at the TA-16 burn ground. These active units operate under RCRA interim status requirements and are designated as SWMU Nos. 16-010(e) and 16-010(f), respectively, in Module VIII. They are two of the units for which a permit is being sought through this permit application. SWMU No. 16-010(e) was built in 1961 to filter HE-contaminated wash water from the basket wash facility, TA-16-390. Wash water was carried from the basket wash facility to the filter vessel through a trough (TA-16-1129). This arrangement was used until 1966, when TA-16-390 was decommissioned. SWMU No. 16-010(f) replaced filter bed TA-16-393, which was taken to TA-54 for disposal in 1965.

The filter vessels are made of steel and measure 8 ft in diameter and 10 ft high. They are equipped with jib-crane-operated, cone-shaped steel covers. Approximately 3 ft of the filter vessels are above grade. The structures are cone-shaped steel containers with a surface layer of sand overlying layers of fine and coarse gravel.

The filter vessels are now used for filtering HE/water sludge from HE sumps. The sludge, which is brought in on tank trucks from HE sumps site wide, is pumped into a filter vessel and dried by blowing hot air across the filtered residue. The residue is burned in the vessel and any residual material is raked out and put into drums for reburning.

A drainage system takes the filtered water from the filter vessel to a filter/treatment unit (TA-16-363).

10.1.3 Storage Areas

A container storage area is located at TA-16-88. This active unit currently operates under RCRA interim status requirements, and is one of the units for which a permit is being sought through this permit application. It is identified as SWMU No. 16-012(a2) in the 1990 SWMU Report. Wastes stored in this container storage area include solid hazardous and low-level mixed waste.

A storage area was formerly located near or within TA-16-386. Barium nitrate was reportedly placed in the area in the 1940s and remained there until it was removed in the late 1960s (LANL, 1990; LANL, 1993a). This area is identified as SWMU No. 16-016(c) in Module VIII.

12.0 CERTIFICATION

I certify under penalty of law that this document and all attachments were prepared under my direction or supervision in accordance with a system designed to assure that qualified personnel properly gather and evaluate the information submitted. Based on my inquiry of the person or persons who manage the system, or those persons directly responsible for gathering the information, the information submitted is, to the best of my knowledge and belief, true, accurate, and complete. I am aware that there are significant penalties for submitting false information, including the possibility of fine and imprisonment for knowing violations.

Dennis J. Erickson
Division Director for Environment, Safety, and Health Division
Los Alamos National Laboratory
Operator

4/9/96
Date Signed

Larry D. Kirkman
Acting Area Manager, Los Alamos Area Office
U.S. Department of Energy
Albuquerque Operations
Owner/Operator

4/9/96
Date Signed

RCRA Part B Permit Application
Volume II

Technical Area 16

Building 88, Container Storage Area
Flash Pads 387 and 388, Open Burn Units
Burn Pads 388 and 399, Open Burn Units
Burn Trays 388 and 394, Open Burn Units
Filter Vessels 401 and 406, Open Burn Units

Prepared by:
Los Alamos National Laboratory
Hazardous and Solid Waste Group (ESH-19)
Los Alamos, New Mexico 87545

June 1995
Revised April 1996

The most current iteration of Standard Operating Procedures (SOP) for units at Technical Area (TA) 16 are included as Appendices C through J for information purposes only and are included to provide information pertinent to operations at the TA-16 units addressed in this permit application. These SOPs are and will be amended periodically. The following list reflects recent organizational changes pertinent to these SOPs:

Old Group Name(s)	New Group Name(s)
HSE-1	ESH-1
HSE-2	ESH-2
HSE-3	ESH-3
HSE-7	ESH-7
J-6	DX-14
J-8	DX-12
M-1	DX-16
MAT-4	BUS-7
MEC-5	ESA-WMM
WX-1/ESA-1	ESA-WE
WX-3/ESA-2	ESA-WMM
WX-5/ESA-5	ESA-WE
WX-11/ESA-11	ESA-EA/ESA-MT
WX-12/ESA-12	ESA-DE/ESA-WMM

APPENDIX D

Standard Operating Procedures
for
General Handling and Disposal of HE Contaminated Waste

ESA

STANDARD OPERATING PROCEDURE

FOR

PACKAGING AND COLLECTION OF HIGH EXPLOSIVES AND POTENTIALLY HIGH EXPLOSIVES CONTAMINATED WASTE MATERIAL FOR DISPOSAL

Prepared By:_____**Date**_____
Bart Olinger, Materials Team, ESA-WMM

Approved By:_____**Date**_____
D. A. Hemphill, Materials Team Leader, ESA-WMM

Approved By:_____**Date**_____
L. A. Stretz, Group Leader, ESA-WMM

Approved By:_____**Date**_____
Roger H. Goldie, ESA-FM/ESH-5

Los Alamos
National Laboratory

CONTROLLED DOCUMENT

*Users have the ultimate **responsibility to ensure that** they are working **with the latest revision of the** controlled document.*

1.0 SCOPE

This SOP governs the packaging and collection procedures for high explosives (HE) wastes and wastes potentially contaminated with HE which must be collected and disposed by ESA-WMM HE disposal personnel. Potentially HE contaminated waste is waste material that has been in direct contact with HE or has visible HE contamination on it. Tests for HE contamination can be done by an authorized certifying agent. Waste materials originating in other groups will be packaged according to this SOP before being processed by ESA-WMM disposal personnel. Most wastes covered by this SOP are considered hazardous and Resource Conservation and Recovery Act (RCRA) requirements apply.

2.0 LOCATION

2.1 All buildings in which HE is handled within the S-Site Explosives Area. These facilities have satellite storage areas for storing HE and potentially HE contaminated waste. The wastes must not accumulate at the satellite storage area to quantities greater than a volume of 55 gallons or 800 pounds maximum.

2.2 Other Laboratory sites requiring disposal services by ESA-WMM disposal personnel.

3.0 EQUIPMENT

3.1 Disposal cans, safety style
3.2 55 gallon oil drums
3.3 Oily waste receptacles (UL-approved)
3.4 Dumpsters
3.5 Cardboard boxes
3.6 Reinforcing cardboard flats
3.7 Colson carts

4.0 MATERIALS

4.1 Plastic bags
4.2 Masking tape
4.3 Cushioning material
4.4 Paper bags
4.5 Cardboard boxes

5.0 GENERAL INSTRUCTIONS

5.1 Packaging

The following rules apply to the packaging of all HE contaminated waste materials:

5.1.1 Waste that is wet with oil, solvents, or water will be absorbed in some medium and placed in a plastic bag and boxed. A 55 gallon drum containing absorbent may also be used. Waste in cardboard boxes will be placed in an appropriate container in the designated satellite storage area

5.1.2 The contents of the containers must be clearly identified. Permanent type receptacles, such as Dumpsters, drums, garbage cans, and disposal cans, will have the contents intended stenciled on their sides. Cardboard boxes containing potentially HE contaminated waste, other than scrap HE, must have their contents identified on the outside. Identification by a marking pen is sufficient. Boxes containing scrap HE must have an explosives scrap record card (Form WX-3-41) attached to the outside. The card shall be filled out as completely as possible, in regard to the cost account, source, type and approximate weight of the contents. All receptacles containing wastes regulated by the Resource Conservation & Recovery Act (RCRA) must have the words "Hazardous Waste" posted on the outside.

5.1.3 If more than one large piece of scrap HE is placed in a box some type of cushioning material such as Kimpak, must be placed between the pieces in such a manner that rubbing or colliding cannot occur during transportation.

5.1.4 Pressed and cast HE scrap will be placed in separate boxes. A reinforcing piece of cardboard shall be placed in the bottom of cardboard boxes containing scrap HE All cardboard boxes shall be closed and the lid securely taped.

5.1.5 Pieces of HE scrap that weigh over 50 pounds shall be placed in a suitably sized HE transportation container that has a lid that can be securely closed.

5.1.6 HE scrap with boosters or metal attachments will be labeled and packaged separately from other explosives.

5.2 Collection and Transportation

5.2.1 Non-hazardous waste also free of HE contamination is to be deposited in the designated Dumpsters outside the principle buildings in the area. Before the contents of these Dumpsters are picked up for disposal as municipal waste, a certification must be given to the driver that the contents are free of HE contamination by an authorized certifying agent.

5.2.2 The collection crew shall be instructed in, and expected to follow, the applicable portions of SOP Chapters 12, 13, and 14.

5.2.3 The collection of potentially HE contaminated waste materials and scrap HE from designated pickup points within the S-Site Explosives Area will be scheduled by the disposal personnel on a basis of good housekeeping policy. A periodic inspection of all active pickup points will be made by the building personnel to ensure that there is no unsafe, untidy buildup of materials at any waste storage point and that the quantity remains below the 55 gallon limit. The disposal personnel will be notified when needed.

5.2.4 Waste material contaminated with explosives and located within the TA-16 exchange area will be loaded and transported to the burning ground by trained disposal or other personnel authorized by the ESA-WMM disposal team.

5.2.5 Combustible trash potentially contaminated with HE will be picked up and transported to the Burn Ground incinerator by the disposal personnel when notified. A waste profile must be available at the time of pickup.

5.3 HE and HE Contaminated Waste Packaging and Storage

5.3.1 Potentially **HE** Contaminated Waste

Potentially **HE** contaminated waste will be segregated as combustible and non-combustible and stored in the satellite storage areas in labeled containers. Waste profiles of the contents of the containers stored there will be kept current.

5.3.2 Scrap Explosives

All scrap **HE**, except settling tank waste, will be packaged in cardboard boxes. **HE** machining waste that cannot be flushed into the settling tank will be placed in a plastic bag or suitable container and packaged in cardboard boxes.

5.3.3 Scrap MDF

All scrap MDF will be kept separate from other **HE** scrap. Scrap MDF will be packaged in cardboard boxes. Lengths of MDF that are too long to fit may be coiled into a cardboard box for disposal at the Burn Ground.

5.3.4 Scrap Extrudable Explosives

Bulk extrudable explosives, and experimental plastic test devices containing extrudable explosives, will be kept separate from other **HE** scrap and packaged in plastic bags before they are placed in cardboard boxes. Test devices will be wrapped with Kimpak to prevent them from coming into contact with each other.

5.3.5 **HE** Contaminated Solvents

5.3.5.1 Flammable solvents, including toluene, acetone, and alcohol, will be poured into red disposal cans or 55 gallon drums stenciled FLAMMABLE.

5.3.5.2 Halogenated hydrocarbons, such as trichloroethylene and methyl chloroform (chlorothene) will be poured into white disposal cans stenciled NONFLAMMABLE.

5.3.5.3 Dimethylsulfoxide (DMSO) will be poured into disposal cans stenciled "DMSO only."

5.3.5.4 **HE** contaminated solvents, both combustible and non-combustible, will be burned or flashed in accordance with the appropriate section of SOP 12.3.4.

5.3.6 Floor Sweepings

Potentially **HE** contaminated floor sweepings will be stored with the combustible waste in the satellite storage area.

5.3.7 Potentially **HE** Contaminated Oils

5.3.7.1 Used hydraulic fluids drained from explosive processing equipment and oils, such as Way-lub, vacuum oil, and oils collected from sumps and drip pans, will be stored in disposal cans or 55 gallon drums and placed in the designated satellite storage area.

5.3.7.2 ESA-WMM maintenance personnel will identify each container, or group of containers if the material has a common source, with an identifying number, and will record the source, the type of fluid or oil, and date of collection.

5.3.8 Oily Rags

Each equipment room in the Explosives Area is equipped with an oily waste receptacle. Potentially **HE** contaminated oily rags will be placed in these receptacles. The rags will be packaged in a cardboard box and placed in designated satellite storage area for disposal.

5.3.9 Large Non-Combustible **HE** Contaminated Items

Potentially **HE** contaminated, non-combustible hardware, fixtures, furniture, and equipment that cannot be made **HE**-free with certainty must be heat treated on the flash pad, TA-16-387. Such waste picked up or delivered to the flash pad for treatment must be accompanied with a waste profile.

5.3.10 Residual Ashes

The residual ash that remains on a burning pad after a burn will be disposed of as described in SOP 12.1.0.

5.4 Records

All pickups of scrap **HE** and potentially **HE** contaminated materials will be recorded and stored at the Burn Ground, TA-16-389, along with waste profiles and disposal request forms.

ESA

STANDARD OPERATING PROCEDURE

FOR

DISPOSAL OF HE CONTAMINATED MATERIALS AND SCRAP HE ORIGINATING IN OTHER LABORATORY GROUPS

Prepared By:_____**Date**_____
C. W. Sandoval, ESA-WMM

Approved By:_____**Date**_____
D. A. Hemphill, Team Leader
Materials Section, ESA-WMM

Approved By:_____**Date**_____
L. A. Stretz, Group Leader, ESA-WMM

Approved By:_____**Date**_____
Roger Goldie, Safety Officer, ESA-FM/ESH-5

1.0 SCOPE

This SOP governs the disposal by Group HE-contaminated materials and scrap HE originating in other Laboratory groups. This does not include HE settling tank waste, which is covered in SOP 12.1.4.

2.0 DISPOSAL REQUEST FORM (ESA-2-233)

This form (see attached) must be filled out and sent to the Materials Team Leader before materials designated for disposal at the burning ground can be picked up. In the case of materials to be received from <90 day storage areas, this form must be submitted at least 30 days before 90 day period has expired or the Disposal Unit will not guarantee disposal before the deadline.

3.0 PACKAGING

The requesting group will be required to package all materials for pickup in accordance with SOP 12.1.2. Approved packaging, boxes, and containers are available on request from the Transportation Unit.

4.0 INSTRUCTIONS TO DISPOSAL SERVICE MANAGER

There is a space on the form for special instructions to the Disposal Unit Leader. When the Disposal Unit Leader determines that the material may be disposed of at the burning ground, he will write any special instructions needed for disposal in the space provided on the form. The Disposal Unit Leader may then have the material picked up. If disposal is not allowed, the Unit Leader will notify the requester.

After the material is disposed of at the burning ground, the form will be dated and kept at least six months by the Disposal Unit Leader.

Form: ESA-2-233
revised December 1, 1995

DISPOSAL AT ESA BURNING GROUND

This form must be filled out and sent to the ESA-WMM Materials Team Leader, Mail Stop C930 before materials designated for disposal at the ESA Burning Ground can be picked up. In the case of materials to be received from 90 day Storage Areas, this form ***must be submitted at least 30 days before 90 day period expires*** or the ESA Disposal Unit will not guarantee disposal before the deadline.

DATE:_____

Requester:_____ Group_____ Phone_____

Charge Code_____ Cost Code_____ Work Pkg_____

1. High Explosive (HE) Scrap
   Type_____
   _____
   _____
   History_____
   _____
   _____
   _____

Approx Weight_____ **Approx. Volume**_____

2. HE Contaminated Materials*
   Type_____
   _____
   _____
   History_____
   _____
   _____
   _____

3. Special Instructions to Disposal Unit Leader (***not be be completed by requester)***_____
   _____
   _____

Approved_____ **Date**_____
Materials Team Leader

Date of Disposal_____

*All HE contaminated materials must be certified non-radioactive by ESH-1 RCT and be free of lead, beryllium, oil, PCBs and asbestos.

ESA

STANDARD OPERATING PROCEDURE

FOR

GENERAL RULES FOR DISPOSAL OPERATIONS

Prepared By:_____**Date**_____
C. W. Sandoval, ESA-WMM

Approved By:_____**Date**_____
Douglas A. Hemphill, Team Leader
Materials Section, ESA-WMM

Approved By:_____**Date**_____
L. A. Stretz, Group Leader, ESA-WMM

Approved By:_____**Date**_____
Roger Goldie, Safety Officer, ESA-FM/ESH-5

Los Alamos
National Laboratory

CONTROLLED DOCUMENT

Users have the ultimate responsibility to ensure that they are working with the latest revision of the controlled document.

Copy Number

1.0 SCOPE

This SOP contains rules and regulations that apply at all times to all persons involved with ESA disposal operations. The disposal operations are under the jurisdiction of the ESA-WMM Materials Section and are supervised by the Disposal Unit Supervisor. The disposal facilities are to be used for destruction by burning of combustible industrial waste and scrap HE generated in LANL operations and treating wastewater from HE processing operations. Some waste and scrap HE from other Laboratory groups may be disposed of in accordance with SOP 12.4.1.

The Disposal Unit Supervisor refers to that person or a qualified designee fully trained in accordance with this SOP.

2.0 LOCATIONS

2.1 TA-16-388, 394, and 399 Burning Trays

2.2 TA-16-387 Flash Pad

2.3 TA-16-386, Storage Area

2.4 TA-16-401 and 406 Filters Vessels

2.5 TA-16-402 Air Heater

2.6 TA-16-389 Control Shelter

2.7 TA-16-349 Gate, Structure

2.8 TA-16-1409, ESA Incinerator Located at Burning Ground

2.9 TA-9, TA-11, TA-14, TA-16, TA-22, and TA-40 HE settling tanks

2.10 TA-16-363, Waste Water Treatment Facility

3.0 LIMITS

3.1 Personnel

3.1.1 Nine (9) persons are permitted inside the burning ground area provided that no specific area is in excess of the posted limits.

3.1.2 Specified limits for particular disposal operations are given in the ESA SOP that pertains to the operation.

3.2 Explosives

Reference ESA SOP 12.1.2 for particular disposal operation.

4.0 ALLOWABLE EXPLOSIVES

Any explosive material listed in ESA SOP 1.1.0, Tables 1 and 2 and any experimental explosives/components listed in active High Explosives Development Procedures and Authorizations (HEDs).

5.0 TRAINING AND SAFETY APPAREL

5.1 Personnel engaged in explosives disposal activities will be thoroughly trained in the hazards involved in handling, transporting, disposing of explosives, and in the precautions necessary for personnel protection. Personnel will be expected to understand the intent of the SOPs and to conduct themselves accordingly.

5.2 All personnel involved in disposal operations will be instructed in, and are expected to follow, the applicable portions of ESA SOPs Chapters 1, 12, 13, and 14.

5.3 Operators who are engaged in disposal operations at the burning ground will wear coveralls, industrial safety shoes, appropriate eye protection, gloves and respirators when necessary.

6.0 BURNING GROUND GENERAL OPERATING RULES

6.1 The Disposal Unit Supervisor has custody of the blasting machine and squibs. In his absence, this custody may be delegated to an alternate.

6.2 At the end of any disposal operations, all tools and equipment are to be returned to their proper storage places.

6.3 No more than two people are permitted to ride in a truck hauling explosives, and both of them must be in the cab.

6.4 During winter operations, the Disposal Unit Supervisor will check the roads, turn outs, and parking areas of the burning ground to make sure their condition is satisfactory for HE trucks. Roads will be maintained in a condition to allow passage of explosives-carrying vehicles with no more than the normal traffic hazards.

If conditions are marginal, the Disposal Unit Supervisor will notify the Area Manager and request immediate service to clean the roads. HE Trucks will not be driven over these roads until they are, in the Disposal Unit Supervisor's judgment, clear. Tire chains may be used on trucks transporting HE, at the Disposal Unit Supervisor's discretion.

6.5 The gate, Structure 349, on the access road will be closed by the burn ground crew before explosives disposal operations begin at the burn ground. When the gate is closed during normal operating hours, approval for entrance to the burn ground may be obtained by telephoning the Disposal Unit Supervisor. If for any reason the gate must be closed during non-operating hours, or on weekends or holidays, the Disposal Unit Supervisor will notify the Materials Team Leader. The Team Leader will notify Security personnel of the gate closing.

6.6 Scrap metal will not be allowed to accumulate on burning pads, except as allowed for the flashing of unburnable materials (ESA SOP 12.3.6). The Disposal Unit Supervisor will inspect each pad after each burning operation. Remaining scrap-metal will be removed, and when a convenient quantity of scrap has accumulated it will be disposed of in a suitable landfill in accordance with CST-7 procedures.

6.7 Operations ***will not*** be conducted at the burn ground during the approach of or an actual electrical storm. Control Shelter 389 is considered a safe area during electrical storms.

6.8 No more than two persons are to be involved in setting the ignition train and squibs when preparing to make a burn. Other personnel at the burn ground will remain in Control Shelter 389 during this operation. All personnel will be in Control Shelter 389 when an ignition train is fired. All personnel who are superfluous to the operation will have been sent out of the area. The number of people exposed to the hazard will be kept to a minimum and within the personnel limits established in the SOP for the specific disposal operation.

6.9 All personnel in Control Shelter 389 during the burning operation will remain there until all explosives have been reduced to a smoldering condition.

6.10 When a brush fire is created as the result of a burning operation, the Disposal Unit Supervisor will immediately notify the Fire Department and the ESA Group Office.

6.10.1 If it can be determined that explosives are not involved in the fire, the Disposal Unit Supervisor will immediately send someone to the entrance gate (Structure 349) to admit the Fire Department.

6.10.2 If explosives are involved in the fire, all personnel will remain in Control Shelter 389 until the Disposal Unit Supervisor has been instructed by the Group Office in the procedure to be followed.

6.11 In the case of a detonation during the burning of explosives, the Disposal Unit Supervisor will immediately notify the Materials Team Leader and the ESA-WMM Group Office. All personnel will remain in Control Shelter 389 until the Disposal Unit Supervisor has been instructed by the Team Leader or Group Office in the procedure to be followed.

6.12 Personnel must not step on explosives, and precautions must be taken at all times to prevent spilling or scattering of HE.

6.13 Blasting caps, electric detonators, and HE units containing electric detonators or MDF with boosters will not be destroyed at the burning ground.

6.14 HE pieces that contain metal or other materials that could produce shrapnel will not be burned at the burning ground.

6.15 Explosives machining slurry waste will be burned only on the filter vessels. HE machining waste that is brought to the burning ground in boxes will be disposed of in accordance with ESA SOP 12.1.4.

6.16 Postponement of a Burning Operation

Should an unexpected windstorm or other event prevent the burning of dry scrap HE after it has been spread, the following procedure will be used:

6.16.1 The Materials Team Leader will be notified that the burn cannot proceed.

6.16.2 Classified items will be removed from the pit in the following manner:

6.16.2.1 An explosives truck will be parked outside the entrance gate to the burn tray and the motor turned off.

6.16.2.2 The classified items will be repackaged at the pad and identification cards (Form WX-3-41) placed on the containers.

6.16.2.3 The containers will then be placed in the truck and transported to a magazine for storage.

6.16.2.4 Unclassified materials will be left on the burn tray and covered if possible. The gate to the burn tray will be closed and padlocked. The gate, Structure 349, will be closed.

6.16.2.5 The Disposal Unit Supervisor will inform Security personnel that security checks cannot be made beyond the gate, Structure 349, until further notice from ESA-WMM.

6.16.2.6 The HE scrap will be burned as soon as weather conditions permit.

6.17. All radio transmitters at the burn ground must be turned off when squibs are being handled and may not be turned on until the squibs have been fired or returned to storage.

6.18 The ash that remains after waste treatment at the burn ground is to be disposed of in the following manner.

6.18.1 All residual ash known or suspected of being contaminated with hazardous constituents will be collected and stored in special containers. These containers will be placed in the "less than 90 day" hazardous waste storage site. Suspect ash will be sampled and analyzed for hazardous components. Ash that is hazardous waste will be disposed of by CST through standard channels.

6.18.2 Non-contaminated ash will be collected and stored in containers designated for that purpose. The ash will be held at the Burn Ground until a convenient quantity exists, then appropriate CST waste disposal procedures will be followed.

6.19 Sump fluids either treated (barium processing) or untreated (normal HE processing) will be processed through the filter vessels (TA-16-401 and

406) per SOP 12.1.4. Effluent from the filters is passed through the wastewater treatment facility (TA-16-363) before exiting to the environment. Operation of the wastewater treatment facility is addressed in SOP 12.2.1.

ESA

STANDARD OPERATING PROCEDURE

FOR

IGNITION, BURNING AND FLASHING OF EXPLOSIVES AND EXPLOSIVE-CONTAMINATED MATERIAL

Prepared By:_____**Date**_____
Cindy Sandoval, ESA-WMA

Approved By:_____**Date**_____
Douglas Hemphill, Team Leader
Materials Section, ESA-WMA

Approved By:_____**Date**_____
L. A. Stretz, Group Leader, ESA-WMA

Approved By:_____**Date**_____
Roger Goldie, Safety Officer, ESH-5

Los Alamos
National Laboratory

CONTROLLED DOCUMENT

Users have the ultimate responsibility to ensure that they are working with the latest revision of the controlled document.

Copy Number

1.0 SCOPE

The procedures outlined in this SOP will be followed in igniting and burning or flashing all materials at the burning ground.

The Disposal Unit Supervisor refers to that person or a qualified designee fully trained per ESA SOP 12.1.0.

2.0 LOCATION

Burn Trays TA-16-388, 394, and 399; Flash Pad TA-16-387; Filter Vessels TA-16-401 and 406; Control Shelter TA-16-389; and Gate, Structure TA-16-349.

3.0 LIMITS

3.1 Personnel

Two

3.2 Explosives

See ESA SOP for particular disposal operation

4.0 ALLOWABLE EXPLOSIVES

Explosives approved for disposal by ESA-WMA are those listed in of ESA SOP 1.1.0., Tables 1 and 2.

5.0 EQUIPMENT

5.1 Burning ground firing circuit (ENG-C-23444)

5.2 Periscope (13Y-101920)

5.3 Blasting machine (10-cap capacity) Fidelity Electric Company (S/N 10-62SA).

5.4 Squibs (S-94) ESA-WMA Code Number 225-03, or similar DuPont S-series squibs.

5.5 Blaster's Multimeter, Model 101.

6.0 MATERIALS

6.1 Excelsior

6.2 Kerosene

7.0 AREA CLEARANCE

When the Disposal Unit Supervisor in charge of operations has determined that a burning area has been satisfactorily loaded and is ready to be burned, a check of the burn ground will be made. Personnel who are to remain during the burn operation will assemble in the control shelter. All others will leave the area. An operator will check to make sure that the gate on the access road (Structure 349) is closed. If it is open, he will notify the Disposal Unit Supervisor and another check of the area will be made before the burning operation continues. If it is closed, the operator will return to the control shelter.

8.0 PROCEDURE

8.1 A permanent selective firing circuit is installed at the burning ground. The master controls are located inside Control Shelter 389. Proper setting of the controls directs an electrical pulse that will fire the ignition squibs at any one of the burn areas. The permanent firing circuit will always be used for igniting the squibs at the burning ground except in cases of power outage or circuit failure. In that event, it will be permissible to use the blasting machine to ignite the squibs.

8.2 All motor vehicles at the burning ground will be parked at Control Shelter 389 with their radios turned off.

8.3 The Disposal Unit Supervisor will check the radio located in the control shelter to make sure that it is turned off.

8.4 Ignition and Burning

8.4.1 The Disposal Unit Supervisor will determine that the firing controls are locked in the OFF position. The key to the lock will be kept in the possession of the Disposal Unit Supervisor during the remainder of the burning operation.

8.4.2. Squibs, excelsior, and kerosene will then be collected at Control Shelter 389.

8.4.3 The Disposal Unit Supervisor will proceed on foot to the material to be burned with the materials listed in Item D.2, above.

8.4.4 The Disposal Unit Supervisor will check the circuit breaker in the terminal box at the burning area to make sure it is in the GROUND position and that the alligator clips are disconnected from the two lead wire reels.

8.4.5 An ignition train will be prepared by building a 1 to 2 foot long strip of excelsior up to the material to be burned. The excelsior will be dampened with kerosene.

8.4.6 The Disposal Unit Supervisor will examine of the integrity of existing wire and if necessary, remove enough wire from the two reels located in the terminal box to reach the ignition train. At the terminal box, the end of each lead wire will be connected to one of the two alligator clips in the box. The circuit is then ready for two squibs to be spliced in parallel to the end of the wires. The spliced wires must be kept separated. If there is danger of the splices touching the explosive or some conductor, it must be insulated with electrician's tape.

8.4.7 The squibs will be placed approximately one inch from the excelsior so that the squibs, when fired, will light the ignition train. Do not place squibs within the excelsior as there is a possibility of snuffing the squib before ignition.

8.4.8 The circuit breaker in the terminal box at the burning area will be thrown to the fire position.

8.4.9 A continuity check will be made on the squib circuit from the terminal box outside the fence of the burning pit by using the approved multimeter.

8.4.10 The Disposal Unit Supervisor will proceed to the control shelter.

8.4.11 The Disposal Unit Supervisor will employ the following sequence in firing the squibs:

8.4.11.1 Unlock the firing controls and rotate the selector switch to the number that corresponds to the identifying number of the area being burned.

8.4.11.2 Turn the circuit breaker switch behind the fire button to the ON position.

8.4.11.3 Press the fire button to energize the circuit.

8.4.11.4 An observer should confirm squib firing and ignition by using the periscope located in the control shelter.

8.4.12 Squib failures will be handled as follows:

8.4.12.1 If no evidence of squib ignition was observed the Disposal, Unit Supervisor will repeat the firing procedure.

8.4.12.2 If ignition is not obtained on a second attempt the firing circuit should be saved and the burn tray observed for a minimum of five minutes.

8.4.12.3 When the Disposal Unit Supervisor considers the burn tray area safe, he may proceed to the tray to review hook-up wire integrity. The Unit Supervisor may be accompanied by no more than one person when investigating a failure.

8.4.12.4 Should the cause of squib failure not be determined, the pad will be cleared and the HE and/or inert may be placed in a magazine or burned on the second tray. The responsible engineer should be notified.

8.4.13 Ignition train failures will be handled as follows:

8.4.13.1 If there is evidence of squib initiation (flash upon squib initiation) but the excelsior train or HE does not appear to burn, the pad should be viewed from the control building for a minimum of 30 minutes past the last visual indication of smoke.

8.4.13.2 The firing circuit should be saved and the Disposal Unit Supervisor and/or responsible engineer may then approach the burn tray. Ignition problems have occurred from:

8.4.13.2.1 Squib placement too close (less than 1") or too far (greater than about 6-8") from the excelsior.

8.4.13.2.2 Inadequate wetting (from kerosene) of the excelsior.

8.4.13.2.3 HE or inert material did not sustain burning.

8.4.13.2.4 Squib position changed between setup and ignition (wind or movement of refractory brick).

8.4.13.3 A new ignition train should be fabricated using new squibs and additional excelsior and kerosene as necessary.

8.4.14 When it has been determined that the ignition train has ignited, the Disposal Unit Supervisor will:

8.4.14.1 Rotate the selector switch to the OFF position,

8.4.14.2 Lock the firing controls, and

8.4.14.3 Turn the circuit breaker switch behind the fire button to the OFF position.

8.4.15 The vehicle radios and the radio located in the control shelter may then be turned on.

8.4.16 When the materials that are being burned have been reduced to a smoldering condition, the crew may leave the burning ground. A minimum of 24 hours must lapse after burning before ashes and other debris can be collected. Ashes will be disposed of in accordance with SOP 12.1.0., paragraph 6.18.1 and 2.

8.4.17 The key for the firing control circuit will be placed in the squib storage box in the storage room at the control shelter. The key will always be kept in this box when not in the possession of the Disposal Unit Supervisor.

8.4.18 A record of each burn will be noted on Form WX-3-70.

8.5 Use of Blasting Machine

8.5.1 Preparation

8.5.1.1 In the event that the burning ground selective firing circuit is inoperative and the explosive material is of such a nature that its destruction is urgent, the blasting machine may be used to ignite the squibs.

8.5.1.2 No part of the selective firing circuit will be used in conjunction with the blasting machine.

8.5.1.3 A temporary firing wire will be laid along the ground from the control shelter to the area to be burned. The Disposal Unit Supervisor will positively connect the bared ends of the firing wire at the control shelter and the burning area to get rid of any static electricity that may have accumulated in the wire.

8.5.1.4 The Disposal Unit Supervisor must be in possession of the blasting machine at all times during the rest of the burning operations, as described in the following paragraphs.

8.5.2 Ignition and Burning

8.5.2.1 The blasting machine, squibs, excelsior, and kerosene will be collected at Control Shelter 389.

8.5.2.2 The Disposal Unit Supervisor will proceed on foot to the material to be burned with the materials listed in Item 8.5.2.1, above.

8.5.2.3 An ignition train will then be prepared by putting a wad of excelsior about 1 to 2 feet long on the material to be burned. The excelsior will be dampened with kerosene. The ignition train must be arranged so that both it and the explosives burn toward the direction from which the wind is blowing.

8.5.2.4 The Disposal Unit Supervisor will then connect two squibs to the temporary firing line and will make sure that the squibs are wired in series. The spliced wires must be kept separated. If there is danger of the splices touching the explosive or some conductor, it must be insulated with electrician's tape.

8.5.2.5 The squibs will then be placed in the excelsior so that the squibs, when fired, will light the ignition train.

8.5.2.6 The Disposal Unit Supervisor will then proceed to the control shelter.

8.5.2.7 The Disposal Unit Supervisor will fasten the lead wires to the blasting machine and energize the circuit.

8.5.2.8 The Disposal Unit Supervisor, will then check to see whether the ignition train is ignited by using the periscope in the control shelter.

8.5.2.9 If the materials fail to burn, the Disposal Unit Supervisor will proceed as follows:

8.5.2.9.1 Disconnect the blasting machine and positively connect the bared ends of the wire to get rid of any residual electrical charge in the circuit.

8.5.2.9.2 Repeat firing procedure.

8.5.2.9.3 Wait 30 minutes and then, after surveying the area with the periscope, proceed to the area and inspect the squibs and other parts of the firing system.

8.5.2.9.4 When necessary, the used squibs may be replaced by new ones, and the appropriate parts of Item 8.5.2.1 through 8.5.2.7, above, may be repeated.

8.5.2.9.5 Faulty squibs will be collected for subsequent disposal by flashing with other

HE-contaminated unburnable material, in accordance with ESA SOP 12.3.6.

8.5.2.9.6 Each time a failure occurs, the Disposal Unit Supervisor will disconnect the bared ends of the wire to get rid of any residual electrical charge in the circuit. Wait 30 minutes before proceeding to inspect the squibs and other parts of the firing circuit.

8.5.2.10 When the materials that are being burned have been reduced to a smoldering condition, the crew may leave the burning ground. A minimum of 24 hours must lapse after burning before the ashes and other debris can be collected. Ashes will be disposed of in accordance with ESA SOP 12.1.0, paragraph 6.18.1 and 2.

8.5.2.11 The vehicle radios and the radio in the control shelter may then be turned on.

8.5.2.12 The blasting machine will be placed in the squib storage box in the storage room at the control shelter. The blasting machine will always be kept in this box when not in the possession of the Disposal Unit Supervisor.

8.5.2.13 A record of each burn will be noted on Form WX-3-70.

APPENDIX E

Standard Operating Procedures
for
Flashing and Disposal of Unburnable Materials
and
Disposal of HE Pieces Weighing Over 25 Kilograms

ESA

STANDARD OPERATING PROCEDURE

FOR

FLASHING AND DISPOSAL OF UNBURNABLE MATERIALS

Prepared By:_____**Date**_____
Cindy Sandoval, ESA-WMA

Approved By:_____**Date**_____
D. A. Hemphill, Team Leader, ESA-WMA

Approved By:_____**Date**_____
L. A. Stretz, Group Leader, ESA-WMA

Approved By:_____**Date**_____
Roger Goldie, Safety Officer, ESH-5

Los Alamos
National Laboratory

CONTROLLED DOCUMENT

Users have the ultimate responsibility to ensure that they are working with the latest revision of the controlled document.

Copy Number

1.0 SCOPE

The procedures outlined in this SOP concern the flashing and disposal of unburnable materials that have been used in HE processing areas. Since all materials from HE processing areas are considered to be potentially HE contaminated they are flashed for safety reasons to destroy any HE contamination. The materials are then disposed of at a LANL landfill as administratively controlled non-hazardous waste.

The Disposal Unit Supervisor refers to that person or a qualified designee fully trained per ESA SOP 12.1.0.

2.0 LOCATION

Pit TA-16-387, Burning Pit
TA-16-386, Storage Pad
TA-16-389, Control Shelter & gate
TA-16-349, Structure.

3.0 EQUIPMENT

2.1 Burning ground stands (SK-4377 D-1)
2.2 Wire screen (SK-4377 D-1, Item D)
2.3 Kindling wood or scrap lumber
2.4 Kerosene or Excelsior
2.5 Chain Link Fencing

4.0 LIMITS

4.1 Explosives

HE-contaminated unburnable materials

4.2 Personnel

Four (4) at Flash Pad 387
Five (5) at Control Shelter 389

5.0 PROCEDURE

5.1 HE-Contaminated Materials

5.1.1 Preparation and Inspection

Materials to be flashed will be inspected for presence of reservoirs of oils, other fluids and excessive deposits of explosives which will be removed for disposal on burn pads or pans on the flash pad. Small quantities (<5#) of plastics are allowable. Inspection covers will be removed as appropriate. Suspected materials such as asbestos or other insulating materials will be identified and removed in accordance with lab procedures. All valves on sealed container will be opened or removed.

5.1.2 Receiving and Placing

5.1.2.1 ESA disposal personnel will deliver explosives-contaminated unburnable materials to the burning ground. Any other personnel involved in the delivery will be supervised by the Disposal Unit Supervisor. Storage pad 386 may be used to store HE-contaminated unburnable materials until enough have been collected to justify a flashing operation.

5.1.2.2 Kindling wood or scrap lumber will be placed on the bottom grill of the burning ground stands or around equipment. The total amount of wood to be used will be determined by the type and quantity of materials to be flashed. In all cases, there must be a sufficient quantity of wood to ensure that the flashing will be complete and no significant HE contamination will remain. Cardboard, wood, and paper from the incinerator transportainer may also be used.

5.1.2.3 The Disposal Unit Supervisor will supervise the unloading of trucks and placing of the materials on the stands. For small items, such as valves, a wire screen will be placed on top of the stands. This will hold the materials above the fire for proper flashing.

5.1.2.4 If it appears that it would be more convenient to place the materials on the sand for flashing, this is permitted. The Disposal Unit Supervisor must be sure that the placement of the wood will properly heat all the materials to ensure a satisfactory flashing job. If

appropriate, chain link fencing may be placed under the material to be flashed. The fencing may be gripped at the corners to remove loose, flashed materials to the assembly pad.

5.1.2.5 The flashing operation, will be performed in accordance with ESA SOP 12.5.1.

5.1.3 Disposal

5.1.3.1 On the first workday after the flashing operation (a minimum of 24 hours must lapse), the Disposal Unit Supervisor will inspect the flashed materials to determine whether they have been completely flashed. Indications include evidence of heat treatment such as discoloration or paint charing on the surfaces. If the materials is not satisfactorily flashed, the appropriate steps of this SOP and ESA SOP 12.5.1 will be repeated to ensure complete flashing.

5.1.3.2 Completely flashed materials may be stored at the burning grounds as non-hazardous waste in an assembly area just outside the 387 fenced area until a suitable quantity is accumulated for disposal.

5.1.3.3 When sufficient quantities of flashed materials have accumulated they will be disposed of as non-hazardous administratively controlled waste through approved procedures designated by ESH and CST Divisions.

5.1.3.4 A record of all flashing operations and inspections will be kept on Form WX-3-70 or M&E Building 389 computer as appropriate

5.2 Uncontaminated Materials

5.2.1 "Unburnable, Uncontaminated" materials that are sent to the burning ground through the regular trash collection system (see ESA SOP 12.1.2) will be examined by disposal personnel to make sure that no HE contamination is present. If there is any indication that HE contamination is present, the materials will be flashed in accordance with the appropriate sections of this SOP. After it has been determined by disposal personnel that no HE contamination is present, the materials may be held with flashed materials without being flashed. A record of all materials that are disposed of without being flashed will be kept on Form WX-3-70.

5.2.2 Open fire flashing is very effective in eliminating HE contamination of non-burnable waste. <u>However, Laboratory policy dictates that these wastes remain under institutional control.</u> Therefore, these materials will be disposed of by CST Division in a controlled burial site only.

ESA

STANDARD OPERATING PROCEDURE

FOR

DISPOSAL OF HE PIECES WEIGHING OVER 25 KILOGRAMS (55 POUNDS)

Prepared By: _____ Date _____

Approved By: _____ Date _____
D. A. Hemphill, Section Leader, WX-3

Approved By: _____ Date _____
L. A. Stretz, Group Leader, WX-3

Approved By: _____ Date _____
W. A. Bradley, Division Operations Coordinator, WX-DO

Approved By: _____ Date _____
P. D. Whitehead, Safety Officer, HS-5

Approved By: _____ Date _____
N. L. Shalkowski, X-ray Device Control Office, HS-12

1.0 SCOPE

This SOP governs the disposal by burning of cast or pressed HE pieces that weigh over 25 kilograms each. No HE pieces will be burned that have permanently mounted detonators, MDF arrays, or booster pellets on them. No HE pieces will be burned that contain metals or other materials that could produce shrapnel in the event of a detonation.

2.0 LOCATION

Burning Pit areas TA-16-388 and 399; Control Shelter TA-16-389; and gate, Structure TA-16-349.

3.0 LIMITS

3.1 Explosives

1000 pounds per tray, including 100 pounds of flake TNT. No single piece or assembly will exceed 250 pounds.

3.2. Personnel

3.2.1 Four at Burning Pit Areas 388 or 399
3.2.2 Five at Control Shelter 389

4.0 EQUIPMENT

4.1 Burning ground firing circuit (ENG-C-23444)
4.2 Periscope (13Y-101920)
4.3 Blasting machine (US Army, 10-cap capacity), White-Rodgers Electric Company, Type 6901, Number 1
4.4 Boom truck
4.5 HE van
4.6 Sling (SK-7022 C-1)
4.7 Floor trucks
4.8 Group WX-3 HE transportation containers
4.9 Destruction tray (13Y-47523) with box cover (13Y-47538 C-1) (Lid A)

5.0 MATERIALS

5.1 Squibs (S-94), WX-3 Code Number 225-03 or similar DuPont S-Series squibs
5.2 Excelsior
5.3 Kerosene
5.4 48" wide roll type packing material (asphalt saturated), 15-pound weight

6.0 PROTECTIVE APPAREL

See WX-3 SOP 12.1.0 V.C

7.0 HANDLING

Mechanized and manual handling will be done in accordance with WX-3 SOPs 14.1.1 through 14.1.4.

8.0 AREA CLEARANCE

A check will be made of the burning ground to make sure that all unauthorized personnel leave the burning ground and that the gate, Structure 349, is closed.

9.0 PROCEDURE

9.1 Receiving and Placing

9.1.1 The HE van may be used to deliver HE pieces weighing up to 100 pounds to the burning pit. The explosives-loaded floor trucks will be off-loaded manually from the van just inside the entrance gates. After floor truck unloading, the floor truck will be loaded on the van. The van will then be driven to Control Shelter 389, parked, and the motor turned off, or it may leave the burning ground area.

9.1.2 HE pieces that weigh more than 100 pounds will be delivered to the burning pit using the boom or flat bed truck. The truck will be backed into the fenced area of the pit, and the truck boom will be used to set the HE-laden destruction trays on the prepared burn tray or designated area. After placement of the HE, the truck will be driven to Control Shelter 389, parked, and the motor turned off, or it may leave the burning ground area. It is permissible to use a fork lift to remove and place exceptionally large pieces.

9.1.3 Up to 100 pounds of TNT may be used to form a flame train between HE pieces and to ensure complete burning. The TNT train must not exceed three inches in depth.

9.1.4 The tops of the destruction trays (if used) will be removed before the burn is made.

9.2 Burning

9.2.1 An ignition train will then be prepared by placing a wad of excelsior about 15 inches long on the previously placed 48" wide roll type packing material. Excelsior will also be spread over, and in contact with, nearby pieces. Flake TNT will be used to form a flame train leading from the ignition point to all HE pieces in the burn.

9.2.2 Burning of the HE will be done in accordance with WX-3 SOP 12.5.1.

9.3 Cleanup and Disposal

9.3.1 At least 24 hours, but not more than 36 hours must lapse after burning the HE before another burn can take place on the same tray or area. Ashes will be disposed of in accordance with SOP 12.1.0, paragraph VI.R.1 and 2.

9.3.2 A record of which pit area was used each day will be kept on Form WX-3-70.

APPENDIX F

Standard Operating Procedure
for
Collection and Drying of Explosives Waste from Settling Tanks

ESA

STANDARD OPERATING PROCEDURE

FOR

COLLECTION AND DRYING OF EXPLOSIVES WASTE FROM SETTLING TANKS

Prepared By:_____**Date**_____
C. W. Sandoval, ESA-WMM

Approved By:_____**Date**_____
D. A. Hemphill, Team Leader
Materials Section, ESA-WMM

Approved By:_____**Date**_____
L. A. Stretz, Group Leader, ESA-WMM

Approved By:_____**Date**_____
Roger Goldie, Safety Officer, ESA-FM/ESH-5

Los Alamos
National Laboratory

CONTROLLED DOCUMENT

Users have the ultimate responsibility to ensure that they are working with the latest revision of the controlled document.

1.0 SCOPE

Settling tank sumps are used to settle out the explosives draining from operating bays. The settled-out explosives are removed from settling tanks using a vacuum tank mounted on a truck and then transported to the ESA S-Site burn ground for disposal. Each settling tank is equipped with a wire mesh basket to trap large pieces of HE or other materials. Disposal personnel will empty these baskets each time they pick up a load of waste from the settling tank. At all other times, it will be the responsibility of the building Lead Operator to see that these baskets are maintained in good operating condition, and not allowed to become so full of large pieces of material that it overflows into the settling tank.

The Disposal Unit Supervisor refers to that person or a qualified designee fully trained per ESA SOP 12.1.0.

2.0 LOCATION

All buildings equipped with settling tanks for collecting explosives at TA-9, TA-11, TA-14, TA-16, TA-22, and TA-40; Filter Vessels TA-16-401 and 406; Air Heater TA-16-402; gate, Structure TA-16-349; Control Shelter TA-16-389, and Wastewater Treatment Facility TA-16-363.

3.0 EQUIPMENT

3.1 Vacuum tank (PN 213459) on a truck
3.2 Plastic bags
3.3 Corrugated cardboard boxes (GS-2513 through GS-2523)
3.4 Spark proof hand tools, rakes, shovels, and plastic scoops
3.5 Wooden rod
3.6 Aluminum platform

4.0 LIMITS

4.1 Explosives

4.1.1 Approximately 500 gallons of water HE slurry in vacuum tank.

4.1.2 Each filter vessel: maximum of three-inch layer spread over surface (approximately 750 pounds).

4.2 Personnel Limits

4.2.1 Four at settling tanks and Filter Vessels 401 or 406.

4.2.2 Five at Control Shelter 389.

5.0 PICKUP FREQUENCY

5.1 TA-11 and TA-16

Building Lead Operators will make frequent checks of the settling tanks under their jurisdiction and will notify the Disposal Unit Supervisor when tanks need to be cleaned. Form WX-3-976 will be used to record the pickup of waste from the settling tanks, and Form WX-3-1023 will be used to record inspections of the settling tanks.

5.2 TA-9, TA-14, TA-22, and TA-40

Settling tank waste pickups will be made when requested by TA-9, TA-14, TA-22, and TA-40 personnel.

6.0 COLLECTION PROCEDURE

6.1 The Disposal Unit Supervisor will check and clear with the Building Lead Operator at each building before beginning operations at that location.

6.2 A vacuum will be drawn on the vacuum tank using the vacuum system at building 389 (preferred) or the vacuum system in building 300 or 302 before the operation. The vacuum will not be drawn on the vacuum tank while the suction operation on the settling tank is being performed.

6.3 The truck will be positioned next to the settling tank so that the flexible intake hose will easily reach the bottom and all corners of the tank.

6.4 Any material that may be in the small wire baskets, located at the inlet to the settling tank, will be placed in plastic bags and packaged in cardboard boxes. This material will be transported to the Burn Ground. It will be dried and burned with the sump waste in filter vessels according to ESA ESA SOP 12.3.6.

6.5 The flexible hose will be inserted into the HE slurry at the bottom of the tank, and the valve between the hose and the vacuum tank opened. Control of the HE slurry flow will be accomplished using this valve.

6.6 A sight port in the vacuum tank will allow the operator to determine the slurry level. A liquid level halfway up the sight port is approximately 500 gallons. Sump waste may be picked up as long as sufficient vacuum remains.

6.7 After completion of the settling tank cleaning operations, the truck will be driven to Filter Vessels 401 or 406 at the ESA burn ground.

6.8 The filter vessel will be prepared by spreading a small bundle of excelsior on the sand surface. This is to avoid penetration of the top layer of sand by the slurry stream.

6.9 The truck will be positioned at the filter vessel and the motor turned off.

6.10 The end of the discharge hose will be placed in the filter, and the valve on the bottom of the tank will be opened.

6.11 The residual vacuum in the tank will be bled off by opening the valve on top of the tank.

6.12 When the vacuum has been bled off, the inspection port on top of the tank may be opened.

6.13 After all the waste has drained from the tank, the inside of the tank and the discharge hose will be washed with water using the water hose at the filter vessel. Rags or Kimwipes will be used to clean explosives off the inspection port cover. These rags or Kimwipes will then be placed in the filter for disposal. The inspection port on top of the tank will be closed.

6.14 Any wet machining waste that has been packaged in accordance with ESA SOP 12.1.2 will be emptied into the filter vessel. The bags and cardboard boxes will be placed on Flash Pad 387 and burned with other combustible waste.

6.15 The Disposal Unit Supervisor will inspect the filter vessel to determine whether it will hold another load.

6.16 When the filter is full, the wet waste will be distributed to a uniform thickness, not to exceed approximately three inches, by using a spark-proof rake. The filter vessel will never be raked after the drying period has been started.

6.17 The truck will be driven to Building TA-16-400, and the outside of the tank and the truck will be washed as needed per ESA Operating Standard 18.1.1, "Explosives Decontamination", Section 10.

7.0. DRYING PROCEDURE

7.1 The filter vessel cover will be lifted from the cover platform, placed on the filter, and secured. To perform this operation, two operators will be required.

7.2 The hot air valve leading to the filter vessel that is to be dried will be opened. The other valve will be closed.

7.3. The switch that records the temperature of the air entering the filter vessel to be dried will be turned on.

7.4 The temperature recorder will be turned on.

7.5 The Disposal Unit Supervisor will then start Air Heater 402, and perform the following sequential steps:

7.5.1 The main switch will be turned on.

7.5.2 The heater and blower switches will be turned on.

7.5.3 The selector switch hot air system will be turned on.

7.5.4 If the blower or the heaters are not operating, the heater temperature limit switches will be reset.

7.5.5 If this does not turn on the blower and heaters, the main switch will be turned off and the Materials Section Leader will be called.

NOTE: The door to the heater control panel will be closed and locked at all times except when the controls are actually being manipulated.

7.6 After the waste in the filter vessel has dried, the Disposal Unit Supervisor will turn off Air Heater 402. The cover will be lifted from the filter vessel and placed on the cover platform. The Disposal Unit Supervisor will examine the explosive to determine whether it is dry enough to burn. If not, Items 7.1 through 7.5, above, will be repeated.

7.7 The temperature recorder will be turned off.

7.8 Burning of the explosives will be in accordance with ESA SOP 12.5.1.

7.9 After 24 hours have passed, the Disposal Unit Supervisor will examine the pressure filter to determine the degree of completion of the burn. Before inspection he will first ground the firing circuit at the terminal box located near the filter vessel.

7.10 If burning has not been complete and more than 10 pounds of explosive residues are present, 50 pounds of flake TNT will be poured on and around the unburned material and the material will be burned again. ESA SOP 12.5.1 will be followed in the reburning operation.

7.11 If burning has been incomplete and 10 pounds or less of explosive residues are present, the material may be wet thoroughly with tap water, carefully moved to one side of the filter vessel and included in the next filter vessel burn.

7.12 Ashes and a small amount of sand will be removed from the filter vessel after it has been determined that the latest burning has been complete and no unburned explosives remain. The ashes will be disposed of in accordance with ESA SOP 12.1.0, paragraph 6.18.1. The surface of the filter vessel will then be prepared for the next burn by covering it with an application of fresh, clean sand, a supply of which exists at the filter.

APPENDIX G

Standard Operating Procedure
for
Disposal of HE-Contaminated Solvents and Oils

WX-3

STANDARD OPERATING PROCEDURE

FOR

DISPOSAL OF HE -CONTAMINATED SOLVENTS AND OILS

Prepared By: _____ Date _____

Approved By: _____ Date _____
D. A. Hemphill, Section Leader, WX-3

Approved By: _____ Date _____
L. A. Stretz, Group Leader, WX-3

Approved By: _____ Date _____
W. A. Bradley, Division Operations Coordinator, WX-DO

Approved By: _____ Date _____
P. D. Whitehead, Safety Officer, HS-5

Approved By: _____ Date _____
N. L. Shalkowski, X-ray Device Control Office, HS-12

1.0 SCOPE

This SOP governs the burning of HE-contaminated solvents and oils at the Group WX-3 burning ground.

2.0 LOCATION

Burning Pit TA-16-394; TA-16-387; Control Shelter TA-16-389; gate, Structure TA-16-349; and Building TA-16-400.

3.0 LIMITS

3.1 Personnel

3.1.1 Four at Burning Pit 394
3.1.2 Five at Control Shelter 389

3.2 Explosives

The quantity of HE-contaminated solvents and oils will not exceed 250 gallons in a single burning operation.

4.0 EQUIPMENT

4.1 Burning ground firing circuit (ENG-C-23444)
4.2 Periscope (13Y-47593 D-1 through D-5)
4.3 Blasting machine (US Army, 10 cap-capacity) White-Rodgers Electric Company, Type 6901, Number 1
4.4 Burning ground trays (13Y-102275 D-1)
4.5 Boom truck
4.6 Drum hook (SK 7571 C-1)
4.7 Drum discharge plug, valve, and hose
4.8 Drum tilt stands
4.9 Flexible grounding straps
4.10 Vacuum tank (PN 213459)

5.0 MATERIALS

5.1 Squibs (S-94), WX-3 Code Number 225-03, or other similar DuPont S-series squibs
5.2 Excelsior
5.3 Kerosene
5.4 Kindling wood and scrap lumber

6.0 PROTECTIVE APPAREL

In addition to issued apparel, respirators must be worn when volatile solvents are to be discharged for burning. Face shields or other suitable eye protection are to be worn during those periods when liquid is discharged and during cleanup operations when airborne particles constitute an eye hazard.

7.0 MATERIALS HANDLING

Five-gallon cans and other containers that weigh 50 pounds or less may be moved by individual operators. Containers that weigh from 50 to 100 pounds may be moved by two operators provided the load is equally distributed. The 55-gallon drums and containers that weigh more than 100 pounds must be handled by the boom truck equipment.

8.0 AREA CLEARANCES

8.1 When the Disposal Crew Leader has determined that a burning area has been satisfactorily loaded and is ready to be burned, a check of the burning ground will be made. Personnel that are to remain during the burning operation will assemble in the control shelter. All others will leave the area. An operator will check to make sure that the gate (Structure 349) on the access road is closed. If it is open, he will notify the Disposal Crew Leader and another check of the area will be made before the burning operation continues. If it is closed, the operator will return to the control shelter.

8.2 All motor vehicles at the burning ground will be parked at Control Shelter 389 and their radios will be turned off.

8.3 The Disposal Crew Leader will check the radio located in the control shelter and make sure that it is turned off.

9.0 PROCEDURE

9.1 Preparations

9.1.1 When HE-contaminated liquids are delivered to the burning ground in five-gallon cans, the truck will be backed into the entrance of Burning Pit 394 and the motor turned off. After the contaminated liquids have been unloaded, the truck will be driven to Control Shelter 389, parked, and the motor turned off, or it will be driven away from the burning ground area.

9.1.2 When HE-contaminated liquids are delivered to the burning ground in 55-gallon drums, the truck will be backed into the entrance of Burning Pit 394, and the truck boom will be used to unload and position the drums on tilt stands on the burning ground pit. After the drums have been unloaded, the truck will be driven at least 50 ft from the pit and the motor turned off.

9.1.3 When HE-contaminated liquids are delivered to the burning ground in the vacuum tank (PN 213459) mounted on a truck, the truck will be backed into the entrance of Burning Pit 394. The contaminated liquids will be drained from the tank into the trays by using a discharge hose. The inside of the vacuum tank will be cleaned with water and detergent after draining liquids into the pans.

9.1.4 After the delivery truck has left the pit, the disposal personnel will begin the disposal operation. For flammable liquids, it will not be necessary to use any wood to assist the burning. For nonflammable liquids, kindling wood or scrap lumber will be placed around the trays. Care will be taken to ensure that the trays are level. The amount of

wood to be used will be determined by the type and quantity of HE-contaminated liquids to be burned. Contaminated solvents, if available, may be mixed with moderately flammable oils to promote burning.

9.1.5 The HE-contaminated liquids will be poured into the trays from the 5-gallon containers by hand. A grounding strap will be attached to the 5-gallon container and the tray being filled.

9.1.6 The HE-contaminated liquids will be discharged into the trays from 55-gallon drums with the plastic plug, valve, and hose provided for this purpose. Grounding straps will be attached to the 55-gallon drum and the trays being filled.

9.1.7 The empty containers and discharge equipment will be loaded on the delivery truck and taken to Pit 386.

10.0 BURNING PROCEDURES

The burning of HE-contaminated liquids will be done in accordance with WX-3 SOP 12.5.1.

11.0 CLEANUP

11.1 On the first workday after the burning operation, the Disposal Crew Leader will inspect the trays to determine whether all liquid has been burned or flashed and all HE has been burned. If he is not satisfied that the burning is complete, he may repeat the appropriate steps of this SOP and WX-3 SOP 12.5.1 to ensure complete burning of the material. It is permissible to leave unburned oil in the trays (covered) until additional burnable fluids become available.

11.2 Equipment used to charge Burning Pit 394 with fluids to be burned will be thoroughly cleaned at Building 400. The equipment may be returned to the burning ground for storage.

11.3 A record of all HE-contaminated liquid disposal operations will be kept on Form WX-3-70.

APPENDIX H

Standard Operating Procedure for Operation of the Wastewater Treatment Facility TA-16-363

ESA

STANDARD OPERATING PROCEDURE

FOR

OPERATION OF THE WASTEWATER TREATMENT FACILITY

TA-16-363

Prepared By:_____**Date**_____
C. W. Sandoval, ESA-WMM

Approved By:_____**Date**_____
D. A. Hemphill, Team Leader,
Materials Section, ESA-WMM

Approved By:_____**Date**_____
L. A. Stretz, Group Leader, ESA-WMM

Approved By:_____**Date**_____
Roger Goldie, Safety Officer, ESA-FM/ESH-5

Los Alamos
National Laboratory

CONTROLLED DOCUMENT

Users have the ultimate responsibility to ensure that
they are working with the latest revision of the controlled document.

1.0 SCOPE

The Wastewater Treatment Facility (WWTF) is designed to reduce the level of organic compounds being released to the environment by passing wastewater through activated charcoal filters. As presently designed the charcoal within the filters is selected and sized to remove much of the volatile and other short chain hydrocarbons from wastewater. The facility is designed to operate as an independent system requiring no manpower other than an occasional check of flow meters, effluent quality Chemical Oxygen Demand (COD), Hydrogen Potential (pH) tests, and system integrity (leaks, corrosion, building condition, heater operation, etc.). This SOP will address ESA responsibilities associated with the operation of the WWTF at TA-16-363.

2.0 LOCATION

TA-16 Burn Ground

TA-16-401 and -406, two filter vessels connected by buried pipes directly to the WWTF.

3.0 EQUIPMENT

Figure 1. Schematic of the WWTF which illustrates the operating equipment.

Carbon changeout equipment includes: 55-gallon drums, buckets, gloves, and full face respirators (as appropriate), carbon charging hopper/pump unit, spent carbon collection/filter unit.

4.0 LIMITS

4.1 Explosives

The filtered waste water does not contain significant quantities of explosives. It would not be appropriate to set a limit for normal operations. However, the activated charcoal can absorb as much as 30% of contaminants, by weight, which may include HE. In view of this, a building limit of 400 pounds HE is established. This is based on four (4) operating filters containing a maximum of 100 lbs. contaminant load each.

4.2 Personnel

Five (5) people at the WWTF

5.0 HAZARDS

WWTF presents no hazards during operation; however, operators may be exposed to sump fluids containing HE residual material and possibly some organic solvent vapors when replacing activated carbon.

6.0 CONTROLS

Gloves should be worn and care taken not to spill fluids or carbon during changeout. If odors are strong, a full face respirator with organic vapor canisters will be worn. Employees wearing respiratory protection must have current approval and wear only assigned protection. Any spillage may be picked up with scrapers and/or rags. Contaminated scrapers or rags will be disposed of by burning on burn trays or the flash pad.

7.0 OPERATING PROCEDURES

7.1 Building settling tank sumps will be cleaned according to Standard Procedures outlined in ESA SOP 12.1.4.

7.2 Visually confirm there is power to the facility before emptying the sump truck into a filter vessel. This confirmation may involve observing lights at the facility entrance (if available) or by entering the facility to assure the power switch is on.

7.3 The main tank capacity is 1000 gallons and the facility is designed to treat and discharge a 750 gallon load in about 30 minutes. This input flow rate of 25 gallons/minute should not be exceeded. An optimum flow rate of 6 gallons/minute has been determined and should be maintained whenever possible. When significant quantities of liquid are to be treated, the flow from the sump truck will be controlled to minimize the possibility of main tank overflow.

7.4 Any building sump known to contain soluble barium will be treated per ESA SOP 12.2.0 before those sump fluids are emptied into a filter vessel.

7.5 Figure 1, shows a schematic of the WWTF. The system will normally run with sump fluids pumped through a 30μm pre-filter, then to two 10μm particle filters (in parallel) and then through two activated carbon canisters (in series). This is followed by a 30μm post filter and pH monitoring/adjustment step. Following are guidelines for filter/canister operation:

7.5.1 When the pressure gauge at the 10μm parallel filters registers 14 psi or greater, or flow meters indicate that flow is restricted to 2 gal/min or less, filters should be checked and changed if necessary.

7.5.2 The maximum flow rate through the carbon absorption units is about 25 gallons/minute through each flow meter with an optimum of 6 gallons/minute. When new fine-particle filter cartridges are installed, the flow meter valves will have to be adjusted to restrict flow to this level.

7.5.3 Samples of fluid will be taken at input (from the 1000-gallon tank #1), midstream (from valve between two carbon units in series) and at output (from the exterior retaining tank) for every sump truck load. These process control samples will be analyzed for COD and pH by HE Science & Technology personnel. Data obtained shall be reported to the Disposal Unit Supervisor. The activated carbon will be replaced if the COD continually exceeds 75-100 mg/liter (75-100 ppm).

7.5.4 Skin contact with liquids should be washed off immediately with soap and water.

7.5.5 Two baseboard heaters within the facility will be set to maintain a temperature of 40°F minimum. Proper operation of the heater should be monitored especially during winter to minimize the possibility of freezing.

7.6 Removal of Spent Carbon

7.6.1 Attach a filter bag to the collection frame and place the frame in the manhole above the input tank.

7.6.2 Disconnect input and output lines

7.6.3 Direct output hose into the filter bag on the collection frame.

7.6.4 Direct a stream of water into the input port on the absorption unit. The carbon will discharge as a slurry into the filter bag.

7.6.5 After the water has drained from the carbon, use a forklift to lift he collection frame from the manhole and remove the carbon to barrels for disposal.

7.7 Recharging Carbon into Absorption Unit

7.7.1 Fill hopper of charging unit with carbon and wet thoroughly with water

7.7.2 Fill absorption unit with water

7.7.3 Place carbon fill line into absorption unit filling port

7.7.4 Place water line (attached to pump) into the treated water outlet port of the carbon absorption unit well below water level.

7.7.5 Open valves; water to pump and carbon hopper to eductor.

7.7.6 Turn on pump. Water and carbon will mix in the eductor and be transferred as a slurry to the absorption unit.

7.7.7 When transfer is complete, turn off pump and open drain valve.

8.0 COMPLIANCE SAMPLING

Periodic sampling is performed by ESH Division to ensure compliance with the NPDES permit for Outfall 055. At the outfall, flow rate is checked and grab samples are taken and tested for COD and pH. If no treated water is ready for discharge when ESH wants to sample, burn ground operators should call to inform them the next time water is ready to release to the outfall.

9.0 EMERGENCY WARNINGS/PROCEDURES

9.1 Flashing red lights on the WWTF building warn of potential problems. The top left light indicates that the 1000 gallon input tank is near overflow. The bottom left light flashes if water is detected in the input tank secondary containment. This means that the primary tank is compromised or overflowing. Flashing red light on the top right indicates approaching overflow of the 3000 gallon post-treatment retention tank. The lower right lights if water is detected in the post-treatment tank secondary containment.

9.2 Notify the ESA Disposal Unit Supervisor for any emergency (pump noise, serious leaks, etc.).

9.3 To confirm five-particle filter saturation, the disposal supervisor should briefly open the emergency valve located just below the flow meters. If flow increases the filters are saturated, if flow does not increase the main pump (input tank) may need servicing.

Figure 1. Schematic of WWTF