LANL TA-16

Los Alamos
NATIONAL LABORATORY

Environment, Safety And Health Division (ESH-DO)
P.O. Box 1663, Mail Stop K491
Los Alamos, New Mexico 87545
(505) 667-4218 FAX(505) 665-3811

ESH-DO:98-312

November 19, 1998

Mr. Benito Garcia, Chief
Hazardous and Radioactive Materials Bureau
New Mexico Environment Department
2044 Galisteo Street, P.O. Box 26110
Santa Fe, New Mexico 87502

Dear Mr. Garcia:

RE: NMED Request for Explanation of Process, TA-16 High Explosives Wastewater Treatment Facility (HEWTF)

I am submitting the enclosed information in response to your October 22, 1998, letter requesting an explanation of the process at the TA-16 HEWTF. A majority of this information has been provided to your staff and staff of the DOE Oversight Bureau on several occasions in the past, most recently on October 8, 1998, when an identical package of information was given to Julie Wanslow of the DOE/OB. It was our understanding that the information given to Ms. Wanslow was to be shared with members of your staff and would be made available in case any questions arose concerning HEWTF process flows. We apologize for any inconvenience this may have caused you.

The information contained in the attachments provides a very detailed narrative and graphic description of the process flows which are treated at the HEWTF and the manner in which those flows are conveyed to this facility. Most of this information was included in the Laboratory's 1998 NPDES Permit Reapplication since this is the regulatory authority under which the HEWTF is permitted to receive, treat and discharge waste streams originating from HE processes located at LANL. However, we have also included a summary section which more concisely addresses the topics outlined in your letter. Since the waste streams entering the HEWTF are subject to regulation under Section 402 of the Clean Water Act, the point source discharge and the wastewater treatment units which compose the HEWTF are excluded from regulation under RCRA and the New Mexico Hazardous Waste Regulations. The identity of any wastewater treatment sludge produced at these units is independent of this exclusion and may be RCRA waste. Accordingly, the management, treatment and disposal of sludge produced by the HEWTF has been addressed in our original Part A and Part B applications.

I hope this information will clarify any questions regarding any information concerning the HEWTF which has been previously submitted to NMED. LANL staff has made every effort to

LANL TA-16 (Key: Permit, "Fish Ladder" Canyon, Water Canyon Watershed, Cañon de Valle)

6131

provide detailed and current information in response to all requests concerning this subject from HRMB and DOE/OB staff, and have inquired a number of times during the last several months about the completeness of our response to the June 17, 1998 Request for Supplemental Information. I would like to take this opportunity to once again invite you and your staff to tour these facilities in an effort to further communications between LANL and HRMB staff regarding any continued concerns which the Bureau has in reference to the regulatory status of the HEWTF.

If you have any questions regarding the enclosed information or the HEWTF, or if you would like to arrange a tour of the facility, please contact Alex Puglisi of LANL's Hazardous and Solid Waste Group at (505)667-4882. Thank you.

Sincerely,

Dennis J. Erickson
Division Director

DJE/AP:em

Enclosures: a/s

Cy: R. Burick, DDIR, MS A100, w/o attach
A. Puglisi, ESH-19, MS K498, w/o attach
A. Jackson, ESH-19, MS K490, w/o attach
J. Rochelle, LC/GEN, MS A187, w/o attach
M. Saladen, ESH-18, MS K498, w/o attach
J. Vozella, DOE-LAAO, MS A316, w/o attach
J. Plum, DOE-LAAO, MS A316, w/ attach
Koch, DCOE/LAAO, MS A316, w/ attach
R. Ford-Schmid, NMED DOE-OB, w/o attach
J. Wanslow, NMED DOE-OB, w/o attach
J. Kieling, NMED HRMB, MSA906
ESH-DO file, MS K491
ESH-19 (980239.AP), MS K490
CIC-10, MS A150

1998 NPDES PERMIT RE-APPLICATION

Ref: ESH-DO:98-312
November 19, 1998

1998 NPDES PERMIT RE-APPLICATION OUTFALL FACT SHEET

OUTFALL #	OUTFALL LOCATION (TA-Bldg.)	OUTFALL CATEGORY	RECEIVING WATER
05A055	TA-16-1507	High Explosives Wastewater Treatment Facility (HEWTF)	Tributary to Canon de Valle

Source of Discharge

- This outfall receives process wastewater from High Explosives Research and Development (R&D), Decontamination and Decommissioning (D&D) activities, Environmental Restoration (ER) operations, and Waste Minimization Projects.

Water Treatment Process

The following treatment codes have been assigned for the new High Explosives Wastewater Treatment Facility (HEWTF):

- 1-G: Flocculation (as needed from D&D and ER activities)
- 1-S: Reverse Osmosis (RO)
- 1-U: Sedimentation
- 1-V: Slow sand filtration
- 2-A: Carbon absorption
- 2-K: Neutralization

Wastewater from High Explosives Research and Development (R&D) facilities, D&D operations and ER activities in the HE exclusion areas is transported to the HEWTF by truck.

Wastewater produced from R&D operations may undergo pretreatment before delivery to the HEWTF. This pretreatment include:

- CANATXX® units and Vacuum recirculation systems. These systems in conjunction with the settling sumps remove the majority of the solids before transport to the HEWTF, (1-U: Sedimentation, settling).

Waste water from D&D activities and ER activities may undergo pretreatment prior to discharge to the HEWTF. Pretreatment may include:

- Settling and potential flocculation if necessary to remove solids. (1-U: Sedimentation/settling, and 1-G: Flocculation).

Wastewater is discharged to a sand filter for additional solids removal, or if the waste stream has low solids, is discharged directly into the manhole upstream of the HEWTF. After sand filtration, the wastewater flows through a 100-micron and 20 micron cartridge filters and oil coalescer into a holding tank. From the holding tank the wastewater is then passed through two 500-lb. granular activated carbon canisters and discharged to a final effluent holding tank where pH is adjusted prior to discharge to the 05A055 outfall.

Discharge Rate and Frequency

All wastewater is transported from sumps or ER and D&D operations to the HEWTF by truck. ER wastewater is expected to vary from 0-200,000 gallons per year pending WAC review. Waste transport logs during the period of 9/95 to 12/97 were reviewed. The long term maximum flow for the new HEWTF is estimated to be 260,000 gallons per year (gpy).

- Daily Maximum = 5000 gpd
- Long term average flow = 1250 gpd.

1998 NPDES PERMIT RE-APPLICATION OUTFALL FACT SHEET

Sampling and Analysis for Re-application

- A grab sample for the Permit Re-application was collected at this outfall on March 3, 1998. An additional Sulfite sample was collected at this outfall on March 30,1998, and additional pH and Total chlorine samples were collected on April 20,1998.
- On-going operational sampling is conducted to assess treatment efficiencies and compliance with the Waste Acceptance Criteria (WAC). This data was evaluated to determine potential contaminants of concern in the influent and effluent.

Analytical Results Provided

- In addition to results provided in the Form 2C of the application, a copy of the NPDES Discharge Monitoring Reports (DMR's) summary from August 1, 1994 to October 31, 1997 is provided with this application.

Additional Information

- Latitude = 35° 50' 49"
- Longitude = 106° 19' 49"
- Analytical data for the receiving stream (Canyon de Valle) can be found in the Laboratory's Environmental Surveillance Reports.
- Additional Contaminants of Potential Concern (COPC's) that may be present in the influent to the HEWTF are included with the 2C application.
- An reverse osmosis (RO) unit has been ordered for this facility and is expected to be installed and tested in 1998.
- All solids including spent filters and other solid treatment media will be handled under the appropriate regulatory requirements such as RCRA, etc.
- Initial testing and startup has been completed at the new HEWTF. New Waste Acceptance Criterion (WAC) have been developed for the new HEWTF based upon Resource Conservation and Recovery Act (RCRA) Universal Treatment Standards (UTS) and NPDES Permit requirements. All HE waste streams will be characterized under the Laboratory's Waste Profile Form (WPF) Process prior to discharge into the new HEWTF to insure the facility meets all NPDES Permit requirements.
- ER and D&D activities may generate 0-200,000 gallons per year to be discharged to the HEWTF pending WAC evaluation.

Please print or type in the unshaded areas only.

EPA I.D. NUMBER (copy from item 1 of Form 1)
NM0890010515

OMB No. 2040-0086
Approval expires 5-31-92

FORM 2C NPDES

U. S. ENVIRONMENTAL PROTECTION AGENCY
APPLICATION FOR PERMIT TO DISCHARGE WASTEWATER
EXISTING MANUFACTURING, COMMERCIAL, MINING AND SILVICULTURAL OPERATIONS
Consolidated Permits Program

For each outfall, list the latitude and longitude of its location to the nearest 15 seconds and the name of the receiving water.

A. OUTFALL NUMBER (list)	B. LATITUDE			C. LONGITUDE			D. RECEIVING WATER (name)
	1. DEG.	2. MIN.	3. SEC.	1. DEG.	2. MIN.	3. SEC.	
05A055	35	50	49	106	19	49	Tributary to Canyon de Valle, an ephemeral tributary to the Rio Grande

A. Attach a line drawing showing the water flow through the facility. Indicate sources of intake water, operations contributing wastewater to the effluent and treatment units labeled to correspond to the more detailed descriptions in Item B. Construct a water balance on the line drawing by showing average flows between intakes, operations, treatment units, and outfalls. If a water balance cannot be determined (e.g. for certain mining activities), provide a pictorial description of the nature and amount of any sources of water and any collection or treatment measures.

B. For each outfall, provide a description of: (1) All operations contributing wastewater to the effluent, including process wastewater, sanitary wastewater, cooling water, and storm water runoff (2) The average flow contributed by each operation; and (3) The treatment received by the wastewater. Continue on additional sheets if necessary.

1. OUTFALL NO. (list)	2. OPERATION(S) CONTRIBUTING FLOW		3. TREATMENT	
	a. OPERATION (list)	b. AVERAGE FLOW (include units)	a. DESCRIPTION	b. LIST CODES FROM TABLE 2C-1
05A055	High Explosives Wastewater Treatment			
	Facility (HEWTF):		Reverse osmosis*	1S
	1) TAs 9, 11, 16, and 22 HE wastewater sumps	1250 GPD	Sedimentation*	1U
			Slow sand filtration*	1V
			Carbon adsorption*	2A
			Neutralization*	2K
	2) Environmental Restoration Waste/D&D	0-200,000 GPY	Flocculation	1G
	Wastes**		Sedimentation	1U

* Treatment codes 1U, 1V, 2A, and 2K apply to the HEWTF Facility

** Treatment codes 1U and 1G apply to ER and D&D wastes for potential pretreatment before delivery to HEWTF. Average flows per day for ER and D&D waste can be averaged from a potential maximum discharge up to 200,000 gallons per year.

OFFICIAL USE ONLY (effluent guidelines subcategories)

CONTINUE ON REVERSE

CONTINUED FROM THE FRONT

C. Except for storm runoff, leaks, or spills, are any of the discharges described in Items II-A or B intermittent or seasonal?

[X] YES (complete the following table) [ ] NO (go to Section III)

1. OUTFALL NUMBER (list)	2. OPERATION(s) CONTRIBUTING FLOW (list)	3. FREQUENCY a. DAYS PER WEEK (specify average)	3. FREQUENCY b. MONTHS PER YEAR (specify average)	4. FLOW a. FLOW RATE (in mgd) 1. LONG TERM AVERAGE	4. FLOW a. FLOW RATE 2. MAXIMUM DAILY	4. FLOW b. TOTAL VOLUME (specify with units) 1. LONG TERM AVERAGE	4. FLOW b. TOTAL VOLUME 2. MAXIMUM DAILY	4. FLOW C. DURATION (in days)
05A055	High Explosives Waste Treatment Facility	4	12	.00125	.005	1250 GPD	5000 GPD	208
	ER Wastewater/D&D (0-200,000 GPY)	N/A	N/A	N/A	N/A	N/A	N/A	N/A

A. Does an effluent guideline limitation promulgated by EPA under Section 304 of the Clean Water Act apply to your facility?

[ ] YES (complete Item III-B) [X] NO (go to Section IV)

B. Are the limitations in the applicable effluent guideline expressed in terms of production (or other measure of operation)?

[ ] YES (complete Item III-C) [X] NO (go to Section IV)

C. If you answered "yes" to Item III-B, list the quantity which represents an actual measurement of your level of production, expressed in the terms and units used in the applicable effluent guideline, and indicate the affected outfalls.

1. AVERAGE DAILY PRODUCTION a. QUANTITY PER DAY	b. UNITS OF MEASURE	c. OPERATION, PRODUCT, MATERIAL, ETC. (specify)	2. AFFECTED OUTFALLS (list outfall numbers)
N/A	N/A	N/A	N/A

A. Are you now required by any Federal, State or local authority to meet any implementation schedule for the construction, upgrading or operation of wastewater treatment equipment or practices or any other environmental programs which may affect the discharges described in this application? This includes, but is not limited to, permit conditions, administrative or enforcement orders, enforcement compliance schedule letters, stipulations, court orders, and grant or loan conditions.

[X] YES (complete the following table) [ ] NO (go to Item IV-B)

1. IDENTIFICATION OF CONDITION, AGREEMENT, ETC.	2. AFFECTED OUTFALLS a. NO.	2. AFFECTED OUTFALLS b. SOURCE OF DISCHARGE	3. BRIEF DESCRIPTION OF PROJECT	4. FINAL COMPLIANCE DATE a. REQUIRED	4. FINAL COMPLIANCE DATE b. PROJECTED
AO Docket No. V1-96-1236	All	NPDES Outfalls	Waste Stream Characterization Program and Characterization Project	3/31/97	Completed
FFCA Docket No. V1-96-1237	All	NPDES Outfalls	Waste Stream Characterization Program and Characterization Project	3/31/97	Completed
AO/FFCA (see above)	055	HE wastewater	New HE Wastewater Treatment Plant	10/31/97	Completed
NPDES Permit No. NM0028355	All	NPDES Outfalls	See permit conditions		

B. OPTIONAL: You may attach additional sheets describing any additional water pollution control programs (or other environmental projects which may affect your discharges) you now have underway or which you plan. Indicate whether each program is now underway or planned, and indicate your actual or planned schedule for construction.

[ ] MARK "X" IF DESCRIPTION OF ADDITIONAL CONTROL PROGRAMS IS ATTACHED

CONTINUE ON PAGE 3

CONTINUED FROM PAGE 2

EPA I.D. NUMBER (copy from Item 1 of Form 1)
NM0890010515

A, B, & C: See instructions before proceeding - Complete one set of tables for each outfall - Annotate the outfall number in the space provided. NOTE: Tables V-A, V-B, and V-C are included on separate sheets numbered V-1 through V-9.

D. Use the space below to list any of the pollutants listed in Table 2c-3 of the instructions, which you know or have reason to believe is discharged or may be discharged from any outfall. For every pollutant you list, briefly describe the reasons you believe it to be present and report any analytical data in your possession.

1. POLLUTANT	2. SOURCE	1. POLLUTANT	2. SOURCE
See attached 2C-3 pollutant list	See attached 2C-3 pollutant list	N/A	N/A

Is any pollutant listed in Item V-C a substance or a component of a substance which you currently use or manufacture as an intermediate or final product or byproduct?

☐ YES (list all such pollutants below) ☒ NO (go to Item VI-B)

N/A

Do you have any knowledge or reason to believe that any biological test for acute or chronic toxicity has been made on any of your discharges or on a receiving water in relation to your discharge within the last 3 years?

__ YES (identify the test(s) and describe their purposes below) X NO (go to Section VIII)

N/A

Were any of the analyses reported in item V performed by a contract laboratory or consulting firm?

X YES (list the name, address, and telephone number of, and pollutants analyzed by, each such laboratory or firm below) __ NO (go to Section IX)

A. NAME	B. ADDRESS	C. TELEPHONE (area code & no.)	D. POLLUTANTS ANALYZED (list)
Assaigai Analytical Laboratories	7300 Jefferson N.E. Albuquerque, NM 87109	(505)345-8964	All parameters except pH, temperature, SO3, chlorine, and Nitrate-Nitrite
Johnson Control Northern New Mexico	1800 Diamond Drive Los Alamos, NM 87544	(505)667-0104	Fecal Coliform
IONICS International, Inc.	10655 Richmond Ave. Ste. #150 Houston, TX	(800)434-6946	TCDD
Aquatech - Marion	1776 Marion-Waldo Rd. Marion, OH 43302	(614)389-5991	Total Organic Carbon
American Radiation Services	1726 Wooddale Ct. Baton Rouge, LA 70806	(800)401-4277	Ra-226, Total Alpha, Total Beta, Total Radium

I certify under penalty of law that this document and all attachments were prepared under my direction or supervision in accordance with a system designed to assure that qualified personnel properly gather and evaluate the information submitted. Based on my inquiry of the person or persons who manage the system or those persons directly responsible for gathering the information, the information submitted is, to the best of my knowledge and belief, true, accurate, and complete. I am aware that there are significant penalties for submitting false information, including the possibility of fine and imprisonment for knowing violations.

A. NAME OFFICIAL TITLE (type or print)	B. PHONE No. (area code & no.)
C. S. Przybylek Operations Manager	505 667 5701
C. SIGNATURE	D. DATE SIGNED
	4/30/98
A. NAME OFFICIAL TITLE (type or print) Dennis J. Erickson, ESH Division Director	B. PHONE No. (area code & no.) (505) 667-4218
C. SIGNATURE	D. DATE SIGNED 4/30/98
A. NAME OFFICIAL TITLE (type or print) Richard Burick, ESA Division Director	B. PHONE No. (area code & no.) (505) 667-4136
C. SIGNATURE	D. DATE SIGNED 4/28/98

PLEASE PRINT OR TYPE IN THE UNSHADED AREAS ONLY. You may report some or all of this information on separate sheets (use the same format) instead of completing these pages. SEE INSTRUCTIONS.

EPA I.D. NUMBER *(copy from Item 1 of Form 1)*
NM0890010515

V. INTAKE AND EFFLUENT CHARACTERISTICS *(continued from page 3 of Form 2-C)*

OUTFALL NO. 05A055

PART A - You must provide the results of at least one analysis for every pollutant in this table. Complete one table for each outfall. See instructions for additional details.

1. POLLUTANT	2. EFFLUENT a. MAXIMUM DAILY VALUE (1) CONCENTRATION	a. MAXIMUM DAILY VALUE (2) MASS	b. MAXIMUM 30 DAY VALUE (if available) (1) CONCENTRATION	b. MAXIMUM 30 DAY VALUE (2) MASS	c. LONG TERM AVG VALUE (if available) (1) CONCENTRATION	c. LONG TERM AVG VALUE (2) MASS	d. NO. OF ANALYSES	3. UNITS (specify if blank) a. CONCENTRATION	3. UNITS b. MASS	4. INTAKE (optional) a. LONG TERM AVERAGE VALUE (1) CONCENTRATION	4. INTAKE a. LONG TERM AVERAGE VALUE (2) MASS	4. INTAKE b. NO. OF ANALYSES
a. Biochemical Oxygen Demand (BOD)	< 2	< 0.0167	See DMR Summary.				1	mg / L	lbs/day	N/A	N/A	N/A
b. Chemical Oxygen Demand (COD)	< 1	< 0.0083					1	mg / L	lbs/day	N/A	N/A	N/A
c. Total Organic Carbon (TOC)	< 0.7	< 0.0058					1	mg / L	lbs/day	N/A	N/A	N/A
d. Total Suspended Solids (TSS)	< 4	< 0.0334					1	mg / L	lbs/day	N/A	N/A	N/A
e. Ammonia (as N)	< 0.2	< 0.0017					1	mg / L	lbs/day	N/A	N/A	N/A
f. Flow	VALUE 0.001 a		VALUE		VALUE		1	mgd	lbs/day	VALUE N/A		N/A
g. Temperature (winter)	VALUE 6.3		VALUE		VALUE		1	°C		VALUE N/A		N/A
h. Temperature (summer)	VALUE 11.3 b		VALUE		VALUE		1	°C		VALUE N/A		N/A
i. pH	MINIMUM 7.2	MAXIMUM 7.2	MINIMUM	MAXIMUM			2 b	STANDARD UNITS				N/A

PART B - Mark "X" in column 2-a for each pollutant you know or have reason to believe is present. Mark "X" in column 2-b for each pollutant you believe to be absent. If you mark column 2a for any pollutant which is limited either directly, or indirectly but expressly, in an effluent limitations guideline, you must provide the results of at least one analysis for that pollutant. For other pollutants for which you mark column 2a, you must provide quantitative data or an explanation of their presence in your discharge. Complete one table for each outfall. See the instructions for additional details and requirements.

1. POLLUTANT AND CAS NO. (if available)	2. MARK 'X' a. BELIEVED PRESENT	2. MARK 'X' b. BELIEVED ABSENT	3. EFFLUENT a. MAXIMUM DAILY VALUE (1) CONCENTRATION	a. MAXIMUM DAILY VALUE (2) MASS	b. MAXIMUM 30 DAY VALUE (if available) (1) CONCENTRATION	b. MAXIMUM 30 DAY VALUE (2) MASS	c. LONG TERM AVG VALUE (if available) (1) CONCENTRATION	c. LONG TERM AVG VALUE (2) MASS	d. NO. OF ANALYSES	4. UNITS (specify if blank) a. CONCENTRATION	4. UNITS b. MASS	5. INTAKE (optional) a. LONG TERM AVERAGE VALUE (1) CONCENTRATION	5. INTAKE a. LONG TERM AVERAGE VALUE (2) MASS	5. INTAKE b. NO. OF ANALYSES
a. Bromide (24959-67-9)		X	< 0.5	< 0.0042	See DMR Summary.				1	mg / L	lbs/day	N/A	N/A	N/A
b. Chlorine, Total Residual	X		0.04	0.0003					1	mg / L	lbs/day	N/A	N/A	N/A
c. Color	X		10	N/A					1	APHA	lbs/day	N/A	N/A	N/A
d. Fecal Coliform		X	3	N/A					1	CFU/100 ml	lbs/day	N/A	N/A	N/A
e. Fluoride (16984-48-8)	X		< 0.5	< 0.0042					1	mg / L	lbs/day	N/A	N/A	N/A
f. Nitrate-Nitrite (as N)	X		0.61	0.0051					1	mg / L	lbs/day	N/A	N/A	N/A

ITEM V-B CONTINUED FROM FRONT

1. POLLUTANT AND CAS NO. (if available)	2. MARK 'X' a. BELIEVED PRESENT	2. MARK 'X' b. BELIEVED ABSENT	3. EFFLUENT a. MAXIMUM DAILY VALUE (1) CONCENTRATION	a. MAXIMUM DAILY VALUE (2) MASS	b. MAXIMUM 30 DAY VALUE (if available) (1) CONCENTRATION	b. MAXIMUM 30 DAY VALUE (2) MASS	c. LONG TERM AVG VALUE (if available) (1) CONCENTRATION	c. LONG TERM AVG VALUE (2) MASS	d. NO. OF ANALYSES	4. UNITS a. CONCENTRATION	4. UNITS b. MASS	5. INTAKE (optional) a. LONG TERM AVERAGE VALUE (1) CONCENTRATION	5. INTAKE (optional) a. LONG TERM AVERAGE VALUE (2) MASS	5. INTAKE (optional) b. NO. OF ANALYSES
g. Nitrogen, Total Organic (as N)	X		0.1 h	0.0008	See DMR Summary.				1	mg / L	lbs/day	N/A	N/A	N/A
h. Oil and Grease	X		< 5	< 0.0417					1	mg / L	lbs/day	N/A	N/A	N/A
i. Phosphorus (as P), Total (7723-14-0)	X		0.09	0.0008					1	mg / L	lbs/day	N/A	N/A	N/A
j. Radioactivity														
(1) Alpha, Total	X		< 0.6	N/A					1	pCi/L	N/A	N/A	N/A	N/A
(2) Beta, Total	X		3.04	N/A					1	pCi/L	N/A	N/A	N/A	N/A
(3) Radium, Total	X		0.81	N/A					1	pCi/L	N/A	N/A	N/A	N/A
(4) Radium 226, Total	X		0.81	N/A					1	pCi/L	N/A	N/A	N/A	N/A
k. Sulfate (as SO4) (14808-79-8)	X		63.3	0.5279					1	mg / L	lbs/day	N/A	N/A	N/A
l. Sulfide (as S)	X		< 1	< 0.0083					1	mg / L	lbs/day	N/A	N/A	N/A
m. Sulfite (as SO3) (14265-45-3)	X		< 3	< 0.0250					1	mg / L	lbs/day	N/A	N/A	N/A
n. Surfactants	X		< 0.03	< 0.0003					1	mg / L	lbs/day	N/A	N/A	N/A
o. Aluminum, Total (7429-90-5)	X		< 0.5	< 0.004					1	mg / L	lbs/day	N/A	N/A	N/A
p. Barium, Total (7440-39-3)	X		0.06	0.0005					1	mg / L	lbs/day	N/A	N/A	N/A
q. Boron, Total (7440-42-8)	X		< 0.1	< 0.0008					1	mg / L	lbs/day	N/A	N/A	N/A
r. Cobalt, Total (7440-48-4)	X		< 0.01	< 8E-05					1	mg / L	lbs/day	N/A	N/A	N/A
s. Iron, Total (7439-89-6)	X		0.3	0.0025					1	mg / L	lbs/day	N/A	N/A	N/A
t. Magnesium, Total (7439-95-4)	X		3.2	0.0267					1	mg / L	lbs/day	N/A	N/A	N/A
u. Molybdenum, Total (7439-98-7)	X		< 0.5	< 0.0042					1	mg / L	lbs/day	N/A	N/A	N/A
v. Manganese, Total (7439-96-5)	X		0.043	0.0004					1	mg / L	lbs/day	N/A	N/A	N/A
w. Tin, Total (7440-31-5)	X		< 2	< 0.0167					1	mg / L	lbs/day	N/A	N/A	N/A
x. Titanium, Total (7440-32-6)		X	< 0.03	< 0.0003					1	mg / L	lbs/day	N/A	N/A	N/A

EPA I.D. NUMBER (copy from Item 1 of Form 1)	OUTFALL NUMBER
NM0890010515	05A055

CONTINUED FROM PAGE 3 OF FORM 2-C

PART C - If you are a primary industry and this outfall contains process wastewater, refer to Table 2c-2 in the instructions to determine which of the GC/MS fractions you must test for. Mark "X" in column 2-a for all such GC/MS fractions that apply to your industry and for ALL toxic metals, cyanides, and total phenols. If you are not required to mark column 2-a (secondary industries, nonprocess wastewater outfalls, and nonrequired GC/MS fractions), mark "X" in column 2-b for each pollutant you know or have reason to believe is present. Mark "X" in column 2-c for each pollutant you believe is absent. If you mark column 2a for any pollutant, you must provide the results of at least one analysis for that pollutant. If you mark column 2b for any pollutant, you must provide the results of at least one anlysis for that pollutant if you know or have reason to believe it will be discharged in concentrations of 10 ppb or greater. If you mark column 2b for acrolein, acrylonitrile, 2,4 dinitrophenol, or 2-methyl-4, 6 dinitrophenol, you must provide the results of at least one analysis for each of these pollutants which you know or have reason to believe that you discharge in concentrations of 100 ppb or greater. Otherwise, for pollutants for which you mark column 2b, you must either submit at least one analysis or briefly describe the reasons the pollutant is expected to be discharged. Note that there are 7 pages to this part; please review each carefully. Complete one table (all 7 pages) for each outfall. See instructions for additional details and requirements.

1. POLLUTANT AND CAS NO. (if available)	2. MARK 'X'			3. EFFLUENT								4. UNITS		5. INTAKE (optional)		
	a. TESTING REQUIRED	b. BELIEVED PRESENT	c. BELIEVED ABSENT	a. MAXIMUM DAILY VALUE		b. MAXIMUM 30 DAY VALUE (if available)		c. LONG TERM AVG VALUE (if available)		d. NO. OF ANALYSES			a. LONG TERM AVERAGE VALUE		b. NO. OF ANALYSES
				(1) CONCENTRATION	(2) MASS	(1) CONCENTRATION	(2) MASS	(1) CONCENTRATION	(2) MASS			a. CONCENTRATION	b. MASS	(1) CONCENTRATION	(2) MASS	
METALS, CYANIDE, AND TOTAL PHENOLS																
1M. Antimony, Total (7440-36-0)			X	< 0.05	< 0.0004	See DMR Summary.				1		mg / L	lbs/day	N/A	N/A	
2M. Arsenic, Total (7440-38-2)			X	< 0.06	< 0.0005					1		mg / L	lbs/day	N/A	N/A	N/A
3M. Beryllium, Total (7440-41-7)		X		< 0.004	< 3E-05					1		mg / L	lbs/day	N/A	N/A	N/A
4M. Cadmium, Total (7440-43-9)		X		< 0.008	< 7E-05					1		mg / L	lbs/day	N/A	N/A	N/A
5M. Chromium, Total (7440-47-3)		X		< 0.04	< 0.0003					1		mg / L	lbs/day	N/A	N/A	N/A
6M. Copper, Total (7440-50-8)		X		< 0.04	< 0.0003					1		mg / L	lbs/day	N/A	N/A	N/A
7M. Lead, Total (7439-92-1)		X		< 0.1	< 0.0008					1		mg / L	lbs/day	N/A	N/A	N/A
8M. Mercury, Total (7439-97-6)		X		0.0002	2E-06					1		mg / L	lbs/day	N/A	N/A	N/A
9M. Nickel, Total (7440-02-0)		X		< 0.04	< 0.0003					1		mg / L	lbs/day	N/A	N/A	N/A
10M. Selenium, Total (7782-49-2)		X		< 0.05	< 0.0004					1		mg / L	lbs/day	N/A	N/A	N/A
11M. Silver, Total (7440-22-4)		X		< 0.01	< 8E-05					1		mg / L	lbs/day	N/A	N/A	N/A
12M. Thallium, Total (7440-28-0)			X	< 0.1	< 0.0008					1		mg / L	lbs/day	N/A	N/A	N/A
13M. Zinc, Total (7440-66-6)		X		< 0.7	< 0.006					1		mg / L	lbs/day	N/A	N/A	N/A
14M. Cyanide, Total (57-12-5)		X		< 0.02	< 0.0002					1		mg / L	lbs/day	N/A	N/A	N/A
15M. Phenols, Total		X		< 0.05	< 0.0004					1		mg / L	lbs/day	N/A	N/A	N/A
DIOXIN																
2, 3, 7, 8-Tetrachlorodibenzo-P-Dioxin (1764-01-6)			X	DESCRIBE RESULTS	< 0.11 ppt											

CONTINUED FROM THE FRONT

1. POLLUTANT AND CAS NO. (if available)	2. MARK 'X' a. TESTING REQUIRED	b. BELIEVED PRESENT	c. BELIEVED ABSENT	3. EFFLUENT a. MAXIMUM DAILY VALUE (1) CONCENTRATION	(2) MASS	b. MAXIMUM 30 DAY VALUE (if available) (1) CONCENTRATION	(2) MASS	c. LONG TERM AVG VALUE (if available) (1) CONCENTRATION	(2) MASS	d. NO. OF ANALYSES	4. UNITS a. CONCENTRATION	b. MASS	5. INTAKE (optional) a. LONG TERM AVERAGE VALUE (1) CONCENTRATION	(2) MASS	b. NO OF ANALYSES
GC/MS FRACTION - VOLATILE COMPOUNDS															
1V. Acrolein (107-02-8)			X	< 50	< 0.000417	*Data not available.*				1	ug / L	lbs/day	N/A	N/A	N/A
2V. Acrylonitrile (107-13-1)			X	< 50	< 0.000417					1	ug / L	lbs/day	N/A	N/A	N/A
3V. Benzene (71-43-2)		X		< 10	< 8.34E-05					1	ug / L	lbs/day	N/A	N/A	N/A
4V. BIS (Chloromethyl) Ether (542-88-1)				N/A c	N/A					N/A	N/A	N/A	N/A	N/A	N/A
5V. Bromoform (75-25-2)			X	< 10	< 8.34E-05					1	ug / L	lbs/day	N/A	N/A	N/A
6V. Carbon Tetrachloride (56-23-5)		X		< 10	< 8.34E-05					1	ug / L	lbs/day	N/A	N/A	N/A
7V. Chlorobenzene (108-90-7)		X		< 50	< 0.000417					1	ug / L	lbs/day	N/A	N/A	N/A
8V. Chlorodibromomethane (124-48-1)			X	< 10	< 8.34E-05					1	ug / L	lbs/day	N/A	N/A	N/A
9V. Chloroethane (75-00-3)			X	< 10	< 8.34E-05					1	ug / L	lbs/day	N/A	N/A	N/A
10V. 2-Chloroethylvinyl Ether (110-75-8))			X	< 50	< 0.000417					1	ug / L	lbs/day	N/A	N/A	N/A
11V. Chloroform (67-66-3)		X		< 10	< 8.34E-05					1	ug / L	lbs/day	N/A	N/A	N/A
12V. Dichlorobromomethane (75-27-4)			X	< 10	< 8.34E-05					1	ug / L	lbs/day	N/A	N/A	N/A
13V. Dichlorodifluoromethane (75-71-8)				N/A c	N/A					N/A	N/A	N/A	N/A	N/A	N/A
14V. 1,1-Dichloroethane (75-34-3)		X		< 10	< 8.34E-05					1	ug / L	lbs/day	N/A	N/A	N/A
15V. 1,2-Dichloroethane (107-06-2)		X		< 10	< 8.34E-05					1	ug / L	lbs/day	N/A	N/A	N/A
16V. 1,1- Dichloroethylene (75-35-4)			X	< 10	< 8.34E-05					1	ug / L	lbs/day	N/A	N/A	N/A
17V. 1,2- Dichloropropane (78-87-5)			X	< 10	< 8.34E-05					1	ug / L	lbs/day	N/A	N/A	N/A
18V. 1,3-Dichloropropylene (542-75-6)			X	< 20 e	< 0.000167					1	ug / L	lbs/day	N/A	N/A	N/A
19V. Ethylbenzene (100-41-4)		X		< 10	< 8.34E-05					1	ug / L	lbs/day	N/A	N/A	N/A
20V. Methyl Bromide (74-83-9)			X	< 50	< 0.000417					1	ug / L	lbs/day	N/A	N/A	N/A
21V. Methyl Chloride (74-87-3)			X	< 50	< 0.000417					1	ug / L	lbs/day	N/A	N/A	N/A

CONTINUED FROM PAGE V-4

EPA I.D. NUMBER (copy from Item 1 of Form 1)	OUTFALL NUMBER
NM0890010515	05A055

1. POLLUTANT AND CAS NO. (if available)	2. MARK 'X' a. TESTING REQUIRED	b. BELIEVED PRESENT	c. BELIEVED ABSENT	3. EFFLUENT a. MAXIMUM DAILY VALUE (1) CONCENTRATION	(2) MASS	b. MAXIMUM 30 DAY VALUE (if available) (1) CONCENTRATION	(2) MASS	c. LONG TERM AVG VALUE (if available) (1) CONCENTRATION	(2) MASS	d. NO. OF ANALYSES	4. UNITS a. CONCENTRATION	b. MASS	5. INTAKE (optional) a. LONG TERM AVERAGE VALUE (1) CONCENTRATION	(2) MASS	b. NO. OF ANALYSES
GC/MS FRACTION - VOLATILE COMPOUNDS (continued)															
22V. Methylene Chloride (75-09-2)		X		< 20	< 0.000167	Data not available.				1	ug / L	lbs/day	N/A	N/A	N/A
23V. 1,1,2,2-Tetrachloroethane (79-34-5)			X	< 10	< 8.34E-05					1	ug / L	lbs/day	N/A	N/A	N/A
24V. Tetrachloroethylene (127-18-4)			X	< 10	< 8.34E-05					1	ug / L	lbs/day	N/A	N/A	N/A
25V. Toluene (108-88-3)		X		< 10	< 8.34E-05					1	ug / L	lbs/day	N/A	N/A	N/A
26V. 1,2-Trans-Dichloroethylene (156-60-5)			X	< 10	< 8.34E-05					1	ug / L	lbs/day	N/A	N/A	N/A
27V. 1,1,1-Trichloroethane (71-55-6)			X	< 10	< 8.34E-05					1	ug / L	lbs/day	N/A	N/A	N/A
28V. 1,1,2-Trichloroethane (79-00-5)			X	< 10	< 8.34E-05					1	ug / L	lbs/day	N/A	N/A	N/A
29V. Trichloroethylene (79-01-6)		X		< 10	< 8.34E-05					1	ug / L	lbs/day	N/A	N/A	N/A
30V. Trichlorofluoromethane (75-69-4)				N/A C	N/A					N/A	N/A	N/A	N/A	N/A	N/A
31V. Vinyl Chloride (75-01-4)			X	< 10	< 8.34E-05					1	ug / L	lbs/day	N/A	N/A	N/A
GC/MS FRACTION - ACID COMPOUNDS															
1A. 2-Chlorophenol (95-57-8)			X	< 10	< 8E-05					1	ug / L	lbs/day	N/A	N/A	N/A
2A. 2,4-Dichlorophenol (120-83-2)			X	< 10	< 8E-05					1	ug / L	lbs/day	N/A	N/A	N/A
3A. 2,4-Dimethylphenol (105-67-9)			X	< 10	< 8E-05					1	ug / L	lbs/day	N/A	N/A	N/A
4A. 4,6-Dinitro-O-Cresol (534-52-1)			X	< 50	< 0.0004					1	ug / L	lbs/day	N/A	N/A	N/A
5A. 2,4-Dinitrophenol (51-28-5)		X		< 50	< 0.0004					1	ug / L	lbs/day	N/A	N/A	N/A
6A. 2-Nitrophenol (88-75-5)		X		< 20	< 0.0002					1	ug / L	lbs/day	N/A	N/A	N/A
7A. 4-Nitrophenol (100-02-7)		X		< 50	< 0.0004					1	ug / L	lbs/day	N/A	N/A	N/A
8A. P-Chloro-M-Cresol (59-50-7)			X	< 10	< 8E-05					1	ug / L	lbs/day	N/A	N/A	N/A
9A. Pentachlorophenol (87-86-5)			X	< 50	< 0.0004					1	ug / L	lbs/day	N/A	N/A	N/A
10A. Phenol (108-95-2)		X		< 10	< 8E-05					1	ug / L	lbs/day	N/A	N/A	N/A
11A. 2,4,6-Trichlorophenol (88-06-2)			X	< 10	< 8E-05					1	ug / L	lbs/day	N/A	N/A	N/A

CONTINUED FROM THE FRONT

1. POLLUTANT AND CAS NO. (if available)	2. MARK 'X'			3. EFFLUENT								4. UNITS		5. INTAKE (optional)		
	a. TESTING REQUIRED	b. BELIEVED PRESENT	c. BELIEVED ABSENT	a. MAXIMUM DAILY VALUE		b. MAXIMUM 30 DAY VALUE (if available)		c. LONG TERM AVG VALUE (if available)		d. NO. OF ANALYSES				a. LONG TERM AVERAGE VALUE		b. NO OF ANALYSES
				(1) CONCENTRATION	(2) MASS	(1) CONCENTRATION	(2) MASS	(1) CONCENTRATION	(2) MASS			a. CONCENTRATION	b. MASS	(1) CONCENTRATION	(2) MASS	
GC/MS FRACTION - BASE/NEUTRAL COMPOUNDS																
1B. Acenaphthene (83-32-9)			X	< 10	< 8E-05	***Data not available.***				1		ug / L	lbs/day	N/A	N/A	N/A
2B. Acenaphtylene (208-96-8)			X	< 10	< 8E-05					1		ug / L	lbs/day	N/A	N/A	N/A
3B. Anthracene (120-12-7)		X		< 10	< 8E-05					1		ug / L	lbs/day	N/A	N/A	N/A
4B. Benzidine (92-87-5)			X	< 50	< 0.0004					1		ug / L	lbs/day	N/A	N/A	N/A
5B. Benzo (a) Anthracene (56-55-3)			X	< 10	< 8E-05					1		ug / L	lbs/day	N/A	N/A	N/A
6B. Benzo (a) Pyrene (50-32-8)			X	< 10	< 8E-05					1		ug / L	lbs/day	N/A	N/A	N/A
7B. 3,4-Benzo-fluoranthene (205-99-2)			X	< 10	< 8E-05					1		ug / L	lbs/day	N/A	N/A	N/A
8B. Benzo (ghi) Perylene (191-24-2)			X	< 20	< 0.0002					1		ug / L	lbs/day	N/A	N/A	N/A
9B. Benzo (k) Fluoranthene (207-08-9)			X	< 10	< 8E-05					1		ug / L	lbs/day	N/A	N/A	N/A
10B. Bis (2-Chloro-ethoxy) Methane (111-91-1)			X	< 10	< 8E-05					1		ug / L	lbs/day	N/A	N/A	N/A
11B. Bis (2-Chloro-ethyl) Ether (111-44-4)			X	< 10	< 8E-05					1		ug / L	lbs/day	N/A	N/A	N/A
12B. Bis (2-Chloro-isopropyl) Ether (102-60-1)			X	< 10	< 8E-05					1		ug / L	lbs/day	N/A	N/A	N/A
13B. Bis (2-Ethyl-hexyl) Phthalate (117-81-7)			X	< 10	< 8E-05					1		ug / L	lbs/day	N/A	N/A	N/A
14B. 4-Bromo-phenyl Phenyl Ether (101-55-3)			X	< 10	< 8E-05					1		ug / L	lbs/day	N/A	N/A	N/A
15B. Butyl Benzyl Phthalate (85-68-7)			X	< 10	< 8E-05					1		ug / L	lbs/day	N/A	N/A	N/A
16B. 2-Chloro-naphthalene (91-58-7)			X	< 10	< 8E-05					1		ug / L	lbs/day	N/A	N/A	N/A
17B. 4-Chloro-phenyl Phenyl Ether (7005-72-3)			X	< 10	< 8E-05					1		ug / L	lbs/day	N/A	N/A	N/A
18B. Chrysene (218-01-9)			X	< 10	< 8E-05					1		ug / L	lbs/day	N/A	N/A	N/A
19B. Dibenzo (a, h) Anthracene (53-70-3)			X	< 20	< 0.0002					1		ug / L	lbs/day	N/A	N/A	N/A
20B. 1,2-Dichloro-benzene (95-50-1)			X	< 10	< 8E-05					1		ug / L	lbs/day	N/A	N/A	N/A
21B. 1,3-Dichloro-benzene (541-73-1)			X	< 10	< 8E-05					1		ug / L	lbs/day	N/A	N/A	N/A

CONTINUED FROM PAGE V-6

EPA I.D. NUMBER (copy from Item 1 of Form 1)	OUTFALL NUMBER
NM0890010515	05A055

1. POLLUTANT AND CAS NO. (if available)	2. MARK 'X' a. TESTING REQUIRED	b. BELIEVED PRESENT	c. BELIEVED ABSENT	3. EFFLUENT a. MAXIMUM DAILY VALUE (1) CONCENTRATION	(2) MASS	b. MAXIMUM 30 DAY VALUE (if available) (1) CONCENTRATION	(2) MASS	c. LONG TERM AVG VALUE (if available) (1) CONCENTRATION	(2) MASS	d. NO. OF ANALYSES	4. UNITS a. CONCENTRATION	b. MASS	5. INTAKE (optional) a. LONG TERM AVERAGE VALUE (1) CONCENTRATION	(2) MASS	b. NO. OF ANALYSES
GC/MS FRACTION - BASE/NEUTRAL COMPOUNDS (continued)															
22B. 1,4-Dichlorobenzene (106-46-7)			X	< 10	< 8E-05	Data not available.				1	ug / L	lbs/day	N/A	N/A	N/A
23B. 3,3-Dichlorobenzidine (91-94-1)			X	< 50	< 0.0004					1	ug / L	lbs/day	N/A	N/A	N/A
24B. Diethyl Phthalate (84-66-2)			X	< 10	< 8E-05					1	ug / L	lbs/day	N/A	N/A	N/A
25B. Dimethyl Phthalate (131-11-3)			X	< 10	< 8E-05					1	ug / L	lbs/day	N/A	N/A	N/A
26B. Di-N-Butyl Phthalate (84-74-2)			X	< 10	< 8E-05					1	ug / L	lbs/day	N/A	N/A	N/A
27B. 2,4-Dinitrotoluene (121-14-2)		X		< 10	< 8E-05					1	ug / L	lbs/day	N/A	N/A	N/A
28B. 2,6-Dinitrotoluene (606-20-2)		X		< 10	< 8E-05					1	ug / L	lbs/day	N/A	N/A	N/A
29B. Di-N-Octyl Phthalate (117-84-0)			X	< 10	< 8E-05					1	ug / L	lbs/day	N/A	N/A	N/A
30B. 1,2-Diphenylhydrazine (as Azobenzene) (122-66-7)			X	< 20	< 0.0002					1	ug / L	lbs/day	N/A	N/A	N/A
31B. Fluoranthene (206-44-0)			X	< 10	< 8E-05					1	ug / L	lbs/day	N/A	N/A	N/A
32B. Fluorene (86-73-7)			X	< 10	< 8E-05					1	ug / L	lbs/day	N/A	N/A	N/A
33B. Hexachlorobenzene (118-74-1)			X	< 10	< 8E-05					1	ug / L	lbs/day	N/A	N/A	N/A
34B. Hexachlorobutadiene (87-68-3)			X	< 10	< 8E-05					1	ug / L	lbs/day	N/A	N/A	N/A
35B. Hexachlorocyclopentadiene (77-47-4)			X	< 10	< 8E-05					1	ug / L	lbs/day	N/A	N/A	N/A
36B. Hexachloroethane (67-72-1)			X	< 20	< 0.0002					1	ug / L	lbs/day	N/A	N/A	N/A
37B. Indeno (1,2,3-cd) Pyrene (193-39-5)			X	< 20	< 0.0002					1	ug / L	lbs/day	N/A	N/A	N/A
38B. Isophorone (78-59-1)			X	< 10	< 8E-05					1	ug / L	lbs/day	N/A	N/A	N/A
39B. Naphthalene (91-20-3)		X		< 10	< 8E-05					1	ug / L	lbs/day	N/A	N/A	N/A
40B. Nitrobenzene (98-95-3)		X		< 10	< 8E-05					1	ug / L	lbs/day	N/A	N/A	N/A
41B. N-Nitrosodimethylamine (62-75-9)			X	< 50	< 0.0004					1	ug / L	lbs/day	N/A	N/A	N/A
42B. N-Nitrosodi-N-Propylamine (621-64-7)			X	< 20	< 0.0002					1	ug / L	lbs/day	N/A	N/A	N/A

CONTINUED FROM THE FRONT

1. POLLUTANT AND CAS NO. (if available)	2. MARK 'X' a. TESTING REQUIRED	b. BELIEVED PRESENT	c. BELIEVED ABSENT	3. EFFLUENT a. MAXIMUM DAILY VALUE (1) CONCENTRATION	(2) MASS	b. MAXIMUM 30 DAY VALUE (if available) (1) CONCENTRATION	(2) MASS	c. LONG TERM AVG VALUE (if available) (1) CONCENTRATION	(2) MASS	d. NO. OF ANALYSES	4. UNITS a. CONCENTRATION	b. MASS	5. INTAKE (optional) a. LONG TERM AVERAGE VALUE (1) CONCENTRATION	(2) MASS	b. NO. OF ANALYSES
GC/MS FRACTION - BASE/NEUTRAL COMPOUNDS (continued)															
43B. N-Nitrosodiphenylamine (86-30-6)			X	< 20	< 0.0002	Data not available.				1	ug / L	lbs/day	N/A	N/A	N/A
44B. Phenanthrene (85-01-8)			X	< 10	< 8E-05					1	ug / L	lbs/day	N/A	N/A	N/A
45B. Pyrene (129-00-0)			X	< 10	< 8E-05					1	ug / L	lbs/day	N/A	N/A	N/A
46B. 1,2,4-Trichlorobenzene (120-82-1)			X	< 10	< 8E-05					1	ug / L	lbs/day	N/A	N/A	N/A
GC/MS FRACTION - PESTICIDES															
1P. Aldrin (309-00-2)			X	< 0.05	< 4.17E-07					1	ug / L	lbs/day	N/A	N/A	N/A
2P. α -BHC (319-84-6)			X	< 0.05	< 4.17E-07					1	ug / L	lbs/day	N/A	N/A	N/A
3P. β -BHC (319-85-7)			X	< 0.05	< 4.17E-07					1	ug / L	lbs/day	N/A	N/A	N/A
4P. γ -BHC (58-89-9)			X	< 0.05	< 4.17E-07					1	ug / L	lbs/day	N/A	N/A	N/A
5P. δ -BHC (319-86-8)			X	< 0.05	< 4.17E-07					1	ug / L	lbs/day	N/A	N/A	N/A
6P. Chlordane (57-74-9)			X	< 0.1 d	< 8.34E-07					1	ug / L	lbs/day	N/A	N/A	N/A
7P. 4,4'-DDT (50-29-3)			X	< 0.1	< 8.34E-07					1	ug / L	lbs/day	N/A	N/A	N/A
8P. 4,4'-DDE (72-55-9)			X	< 0.1	< 8.34E-07					1	ug / L	lbs/day	N/A	N/A	N/A
9P. 4,4'-DDD (72-54-8)			X	< 0.1	< 8.34E-07					1	ug / L	lbs/day	N/A	N/A	N/A
10P. Dieldrin (60-57-1)			X	< 0.1	< 8.34E-07					1	ug / L	lbs/day	N/A	N/A	N/A
11P. α - Endosulfan (115-29-7)			X	< 0.1	< 8.34E-07					1	ug / L	lbs/day	N/A	N/A	N/A
12P. β - Endosulfan (115-29-7)			X	< 0.1	< 8.34E-07					1	ug / L	lbs/day	N/A	N/A	N/A
13P. Endosulfan Sulfate (1031-07-8)			X	< 0.1	< 8.34E-07					1	ug / L	lbs/day	N/A	N/A	N/A
14P. Endrin (72-20-8)			X	< 0.1	< 8.34E-07					1	ug / L	lbs/day	N/A	N/A	N/A
15P. Endrin Aldehyde (7421-93-4)			X	< 0.1	< 8.34E-07					1	ug / L	lbs/day	N/A	N/A	N/A
16P Heptachlor (76-44-8)			X	< 0.05	< 4.17E-07					1	ug / L	lbs/day	N/A	N/A	N/A

CONTINUED FROM PAGE V-8

EPA I.D. NUMBER (copy from Item 1 of Form 1)	OUTFALL NUMBER
NM0890010515	05A055

1. POLLUTANT AND CAS NO. (if available)	2. MARK 'X' a. TESTING REQUIRED	b. BELIEVED PRESENT	c. BELIEVED ABSENT	3. EFFLUENT a. MAXIMUM DAILY VALUE (1) CONCENTRATION	(2) MASS	b. MAXIMUM 30 DAY VALUE (if available) (1) CONCENTRATION	(2) MASS	c. LONG TERM AVG VALUE (if available) (1) CONCENTRATION	(2) MASS	d. NO. OF ANALYSES	4. UNITS a. CONCENTRATION	b. MASS	5. INTAKE (optional) a. LONG TERM AVERAGE VALUE (1) CONCENTRATION	(2) MASS	b. NO. OF ANALYSES
GC/MS FRACTION - PESTICIDES (continued)															
17P. Heptachlor Epoxide (1024-57-3)			X	< 0.05	< 4.17E-07	*Data not available.*				1	ug / L	lbs/day	N/A	N/A	N/A
18P. PCB-1242 (53469-21-9)			X	< 1.1	< 9.17E-06					1	ug / L	lbs/day	N/A	N/A	N/A
19P. PCB-1254 (11097-69-1)			X	< 1.1	< 9.17E-06					1	ug / L	lbs/day	N/A	N/A	N/A
20P. PCB-1221 (11104-28-2)			X	< 1.1	< 9.17E-06					1	ug / L	lbs/day	N/A	N/A	N/A
21P. PCB-1232 (11141-16-5)			X	< 1.1	< 9.17E-06					1	ug / L	lbs/day	N/A	N/A	N/A
22P. PCB-1248 (12672-29-6)			X	< 1.1	< 9.17E-06					1	ug / L	lbs/day	N/A	N/A	N/A
23P. PCB-1260 (11096-82-5)			X	< 1.1	< 9.17E-06					1	ug / L	lbs/day	N/A	N/A	N/A
24P. PCB-1016 (12674-11-2)			X	< 1.1	< 9.17E-06					1	ug / L	lbs/day	N/A	N/A	N/A
25P. Toxaphene (8001-35-2)			X	< 5.4	< 4.50E-05					1	ug / L	lbs/day	N/A	N/A	N/A

List of Table 2c-3 and 2c-4 Hazardous Substances

Substance	Origin of Substance	Treatment
Acetic Acid	HE development	Neutralization (2-K)
Ammonia	HE development	Carbon Absorption (2-A)
	Possible HE decomposition product	
Aniline	Environmental restoration	Carbon Absorption (2-A)
Benzene	HE development	Carbon Absorption (2-A)
	Environmental restoration	
Benzonitrile	Environmental restoration	Carbon Absorption (2-A)
Butyl acetate	HE development	Carbon Absorption (2-A)
	Environmental restoration	
Butylamine	HE development	Carbon Absorption (2-A)
	Environmental restoration	
Carbon dioxide	Possible HE decomposition product	Levels will be extremely low
Chlorine	Disinfection of potable water	Levels are acceptable for release to the environment
Chloroform	Possible HE decomposition product	Carbon Absorption (2-A)
Cresol	HE development	
Diethylamine	Environmental restoration	Carbon Absorption (2-A)
Dinitrobenzene	Environmental restoration	Carbon Absorption (2-A)
	Impurity in TNT	Carbon Absorption (2-A)
Dinitrophenol	Environmental restoration	
Dinitrotoluene	Possible decomposition product of HE	Carbon Absorption (2-A)
Ethylene diamine	Impurity in TNT	Carbon Absorption (2-A)
Formaldehyde	Environmental restoration	Carbon Absorption (2-A)
	HE development	Carbon Absorption (2-A)
	Possible decomposition product of HE	
	Environmental restoration	
Formic Acid	Possible decomposition product of HE	Carbon Absorption (2-A)
Hydrochloric Acid	HE development	Neutralization (2-K)
Hydrogen Cyanide	Possible decomposition product of HE	Carbon Absorption (2-A)
Isoprene	Environmental restoration	Carbon Absorption (2-A)
Isopropanolamine	Environmental restoration	Carbon Absorption (2-A)
Nitrate	HE development	Reverse Osmosis (1-S)
	Possible HE decomposition product	
Nitric Acid	HE development	Neutralization (2-K)
Nitrite	HE development	Reverse Osmosis (1-S)
	Possible HE decomposition product	
Nitrotoluene	HE development	Carbon Absorption (2-A)
	Environmental restoration	
Phenol	Possible decomposition product of HE	Carbon Absorption (2-A)
	HE development	
Phosphoric Acid	HE development	Neutralization (2-K)
Sodium	HE development	Carbon Absorption (2-A)
Strychnine	Environmental restoration	Carbon Absorption (2-A)
Styrene	Environmental restoration	Carbon Absorption (2-A)
Sulfuric acid	HE development	Neutralization (2-K)
	Barium nitrate treatment	
Toluene	HE development	Carbon Absorption (2-A)
	Environmental restoration	
Triethylamine	HE development	Carbon Absorption (2-A)
	Environmental restoration	
Trimethylamine	Environmental restoration	Carbon Absorption (2-A)
Xylene	Solvent used in HE development	Carbon Absorption (2-A)
	Environmental restoration	
Xylenol	Environmental restoration	Carbon Absorption (2-A)
Zirconium	HE Experimentation	Carbon Absorption (2/A)/Filtration (1-Q)

Note: Table 2C-3 and 2C-4 constituents are expected to be present only in very small amounts. Other F solvents (e.g., acetone, butanol) may also be present in very low concentrations in wastewater streams; all these are amenable to treatment by carbon absorption. Concentrated solvent streams are not treated in the HEWTF; they are treated by burning at a RCRA-permitted unit. RCRA-regulated metals may be present but not in high enough concentrations to classify these wastewaters as hazardous wastes. Constituents of Concern that are not listed in this table, nor in Form 2C, are included in the following table.

TYPICAL CONTAMINANTS OF CONCERN USED IN HIGH EXPLOSIVES DEVELOPMENT AND EXPERIMENTATION

Substance	Origin
Acetates	HE development
Acetone	HE development
Acetidines	HE development
Acetonitrile	HE development
Barium	Inert development Environmental Restoration
Bicarbonates	HE development
Bromides	HE development
Butyl amine (-t)	HE development
Carbonates	HE development
Chloride salts	HE development
Cyanuric acid	Inert development
Dimethyl sulfoxide	HE development
Dioxane (p-)	HE development
Ethanol	HE development
Ethyl acetate	HE development
Ethyl ether	HE development
Ferricyanides	HE development
Ferrocyanides	HE development
Furans	HE development
Guanidines	HE development
Hexanes	HE development
Heptane	HE development
High explosives (typical but others are used or may be developed)	HE development HE experimentation
Cyclotol	
Comp B	
HMX	
HNS	
LX (various)	
PBX (various)	
PETN	
RDX	
TATB	
TNT	
XTX (various)	
High explosives binders and plasticizers (typical, but others are used or may be developed)	HE development HE experimentation
BDNPA/F	
CEF	
Estane	
FPC 461	
Kraton	
KelF	
Nitrocellulose	
Polyehtylene	
Sylgard	
Viton A	
Hydrazine	HE development
Hydroxides	HE development
Iodides	HE development
Isopropanol	HE development
Methanol	HE development
Methyl-t-butyl ether	HE development
Methyl ethyl ketone	HE development
Methylene chloride	HE development
Nitromethane	HE development

Perchlorates	HE development
Pyridine	HE development
Silver	Experimentation
Sulfates	HE development
Tetrazines	HE development
Tetrazoles	HE development
Triazoles	HE development
Triflates	HE development
Trifluoroacetates	HE development

Note: These are additional constituents that do not appear on EPA's Table 2C-3 or 2C-4, or on Form 2C. As a research & development (R&D) facility, LANL develops and tests new, as well as existing, energetic materials. As a result, the HEWTF chemical input and/or output may change with time. This CPOC list reflects only chemicals that are routinely used during R&D operations. New materials will continue to be managed in accordance with the Laboratory's waste management and minimization policies and procedures.

NPDES APPLICATION FORM 2C FOOTNOTES
OUTFALL 05A055

a Flow based on known tank volume of batch discharge.

b Two samples for pH and temperature have been collected from the new High Explosives Wastewater Treatment Facility (HEWTF) on March 3, 1998 and April 20, 1998. The result for the April 20, 1998 temperature sample was reported under summer temperature.

c EPA remanded parameter.

d Result reported is for alpha and gamma chlordane.

e Result reported is for cis- and trans-1,3-dichloropropene.

h Result for Ammonia reported as <0.2 mg/l.

Note: Samples were collected by grab during the first discharge from the HEWTF on March 3, 1998. A second pH and temperature sample was collected April 20, 1998.

TA16-1508 HIGH EXPLOSIVE WASTE TREATMENT FACILITY
OUTFALL # 05A055

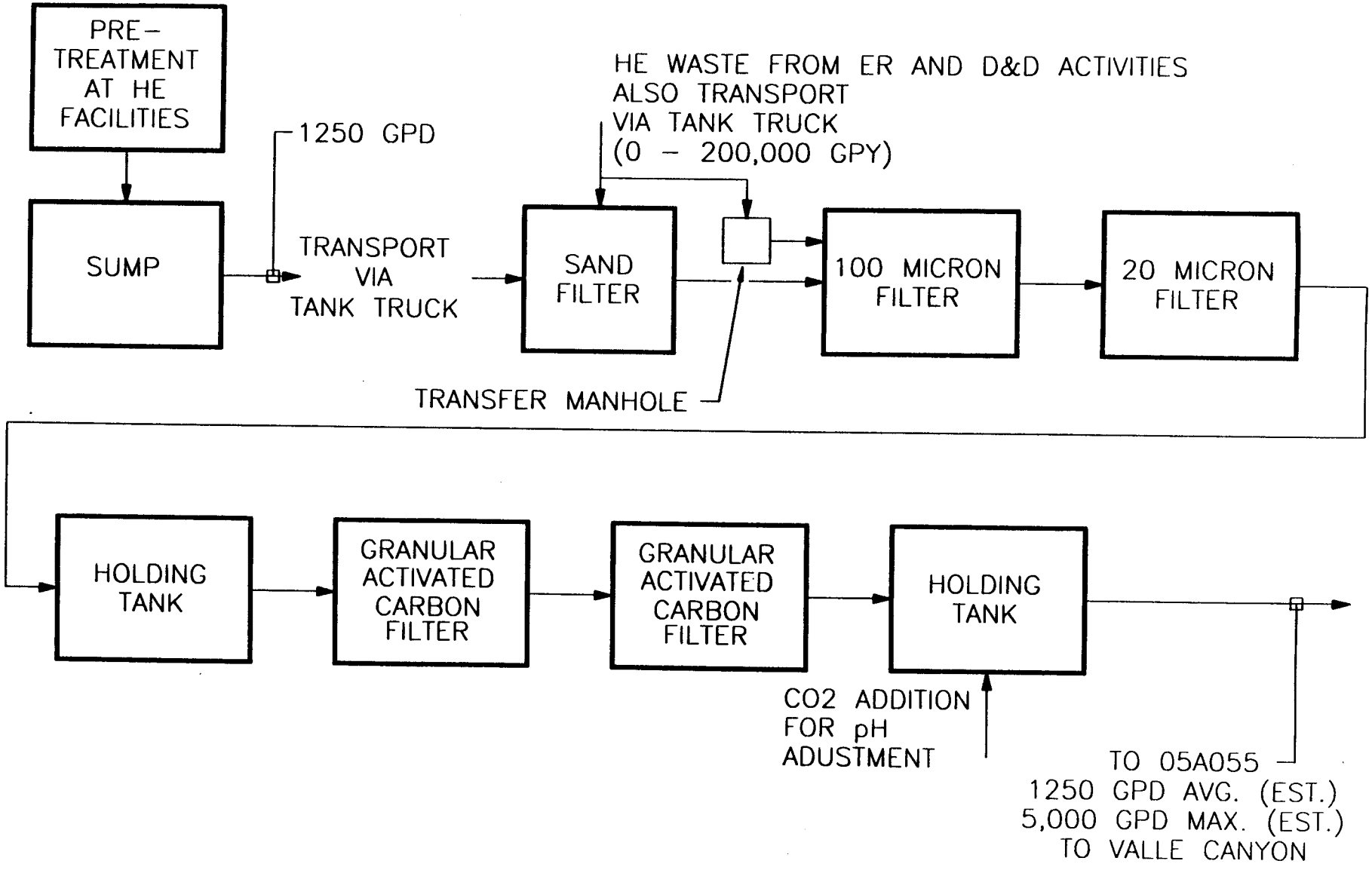

High Explosives (HE) Wastewater Minimization, Collection and Treatment Systems

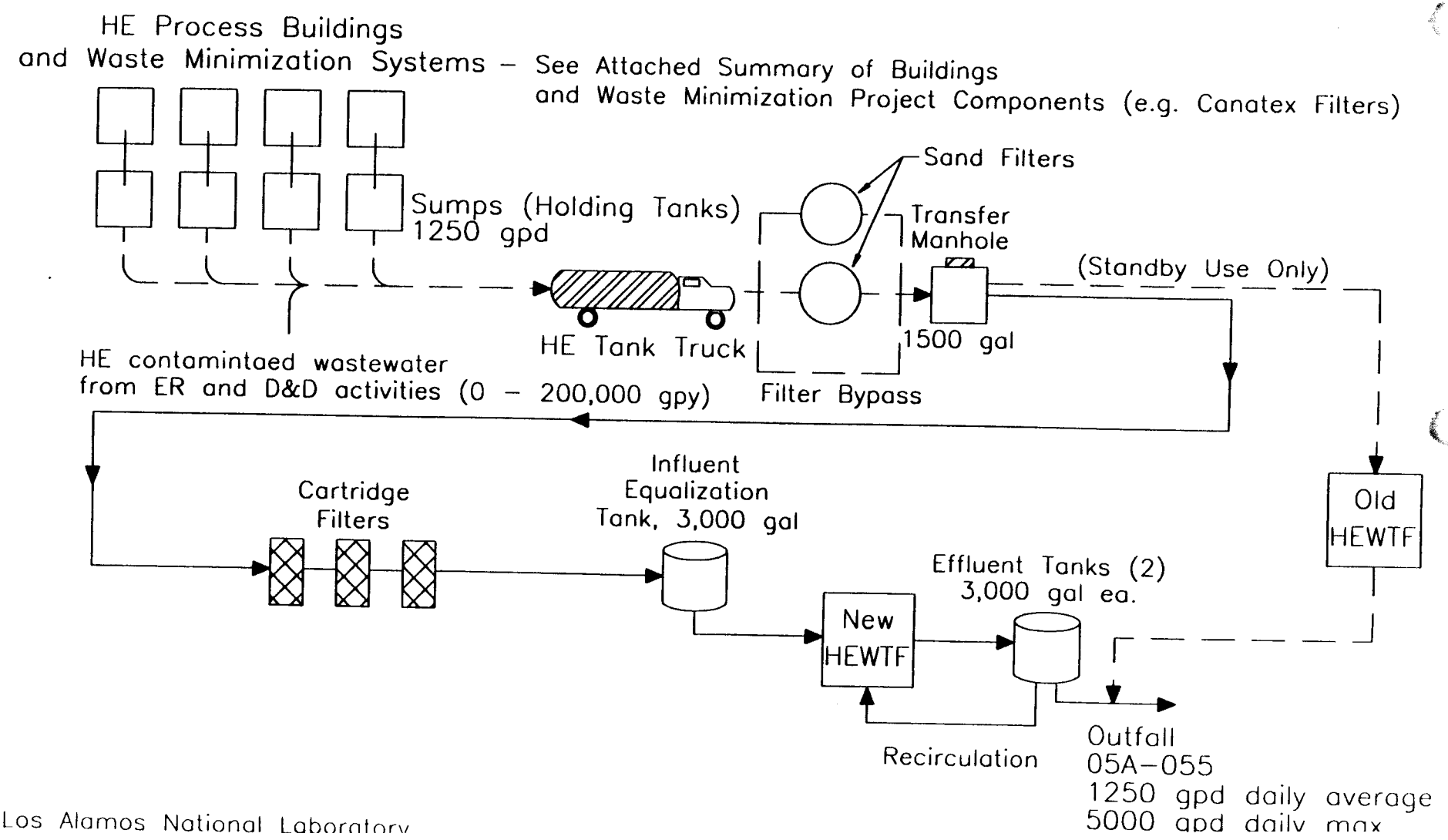

HIGH EXPLOSIVES (HE) WASTEWATER PRETREATMENT SUMMARY

A listing of treatment systems used to minimize wastewater discharged from HE facilities. HE processing facilities and treatment units are listed below:

OUTFALL/FACILITY(S)	Project
05A-053/TA-16-410	Replace water-cooled AC unit with once-thru air-cooled unit Plug/alarm sump Plug floor drains
05A-054/TA-16-340	Upgrade HE/solvent vac. system from once-thru to recirculated units Plug/alarm sumps
05A-056/TA-16-260	Install recirculation/filtration units to eliminate once-through coolant water Upgrade HE vacuum system from once-thru water units to oil-sealed units Plug/alarm sumps
05A-058/TA-16-304, 306	Pump Non-contaminated waste water to sewer Upgrade HE vacuum system from once-thru water units to oil-sealed units Plug floor drains
05A-063/TA-16-400	Plug/alarm sump
05A-066/TA-9-21, 28, 29, 32, 22, 41	Ugrade HE/solvent vac system from once-thru to recirculated units Install Laboratory Vacuum Pumps and Coolers to eliminate once-thru water Plug/alarm sumps
05A-067/TA-9-43, 35, 37, 38, 42, 45, 46	Plug/alarm sumps
05A-068/TA-9-48	Install recirculation/filtration units to eliminate once-thru coolant water Upgrade HE vacuum system from once-thru water units to oil-sealed units Plug/alarm sumps
05A-068, 096, 097/TA-11-Drop Tower	Combine 3 outfalls into single discharge point. Install particulate filters upstream of sump
05A-071/TA-16-430	Modify HE Dust Collectors to eliminate once-thru spray water usage. Recirculate HE press oil cooling water Plug/alarm sumps

Note: HE outfalls associated with facilities listed above have been eliminated from the Laboratory's NPDES permit. All HE wastewater is trucked to the new TA-16 HEWTF.

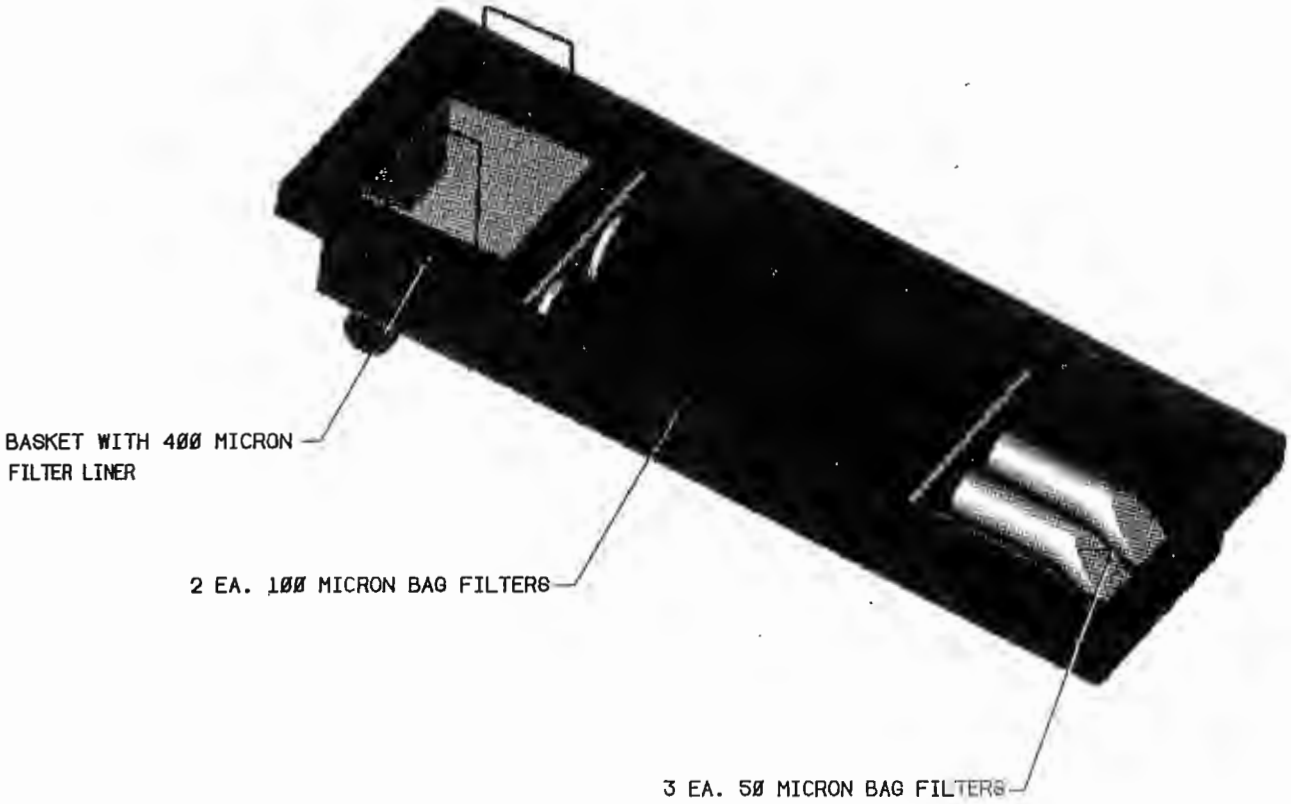

FIGURE - MACHINE TOOL COOLANT PREFILTER ASSEMBLY

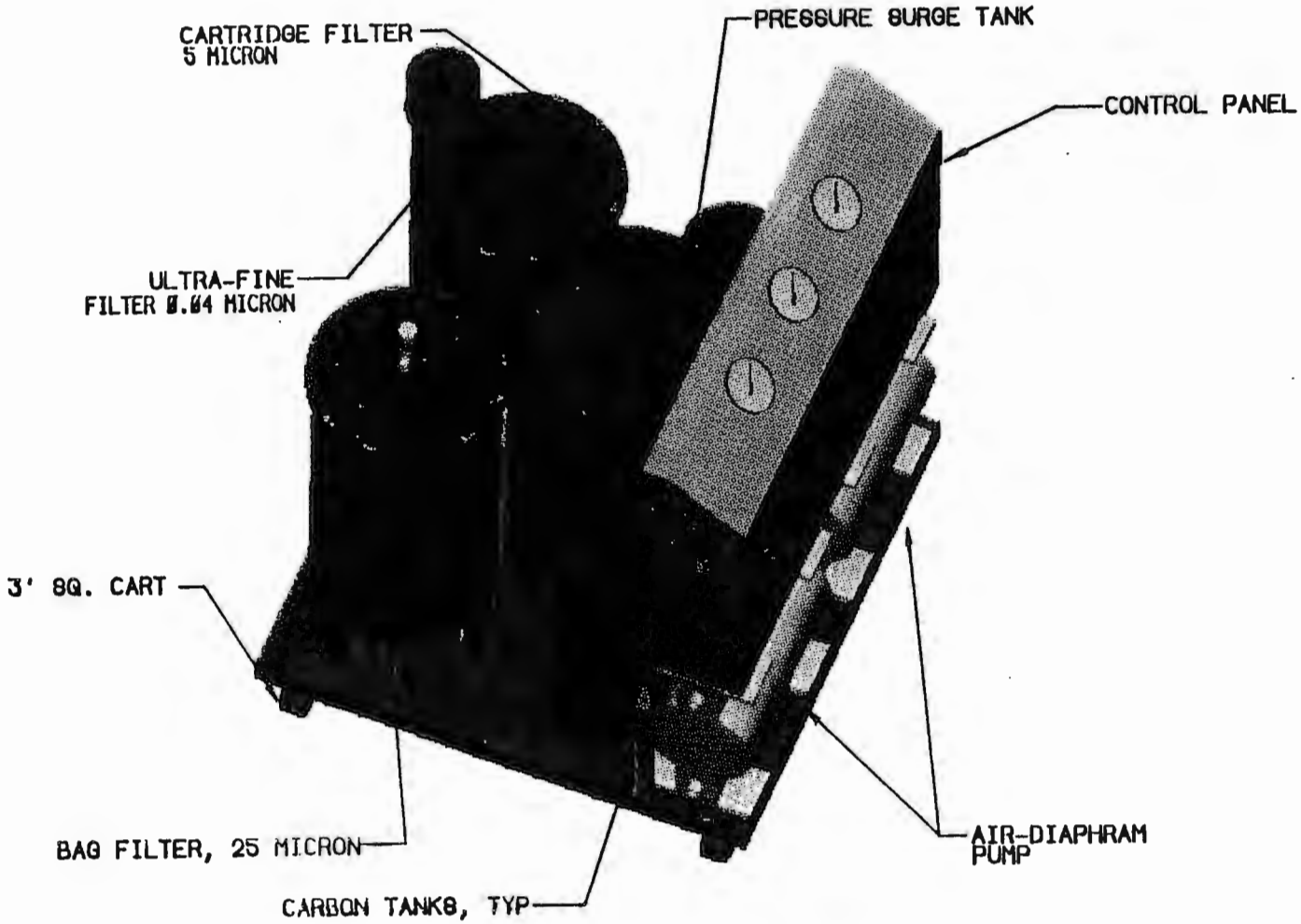

FIGURE - ULTRA-FINE FILTER ASSEMBLY

HE MACHINE TOOL COOLANT RECIRCULATION SCHEMATIC

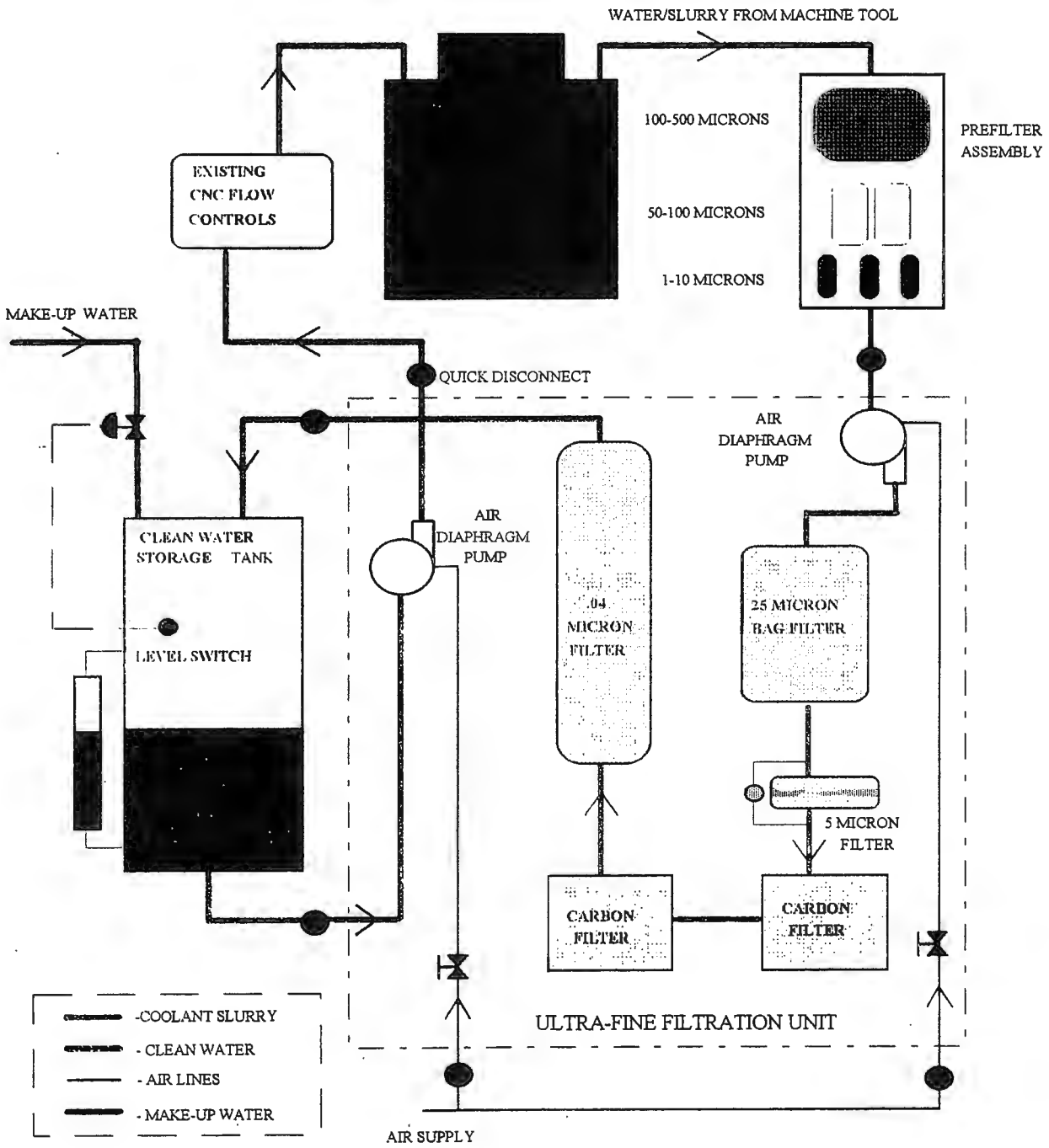

OIL SEALED VACUUM SYSTEM FOR HE MACHINING

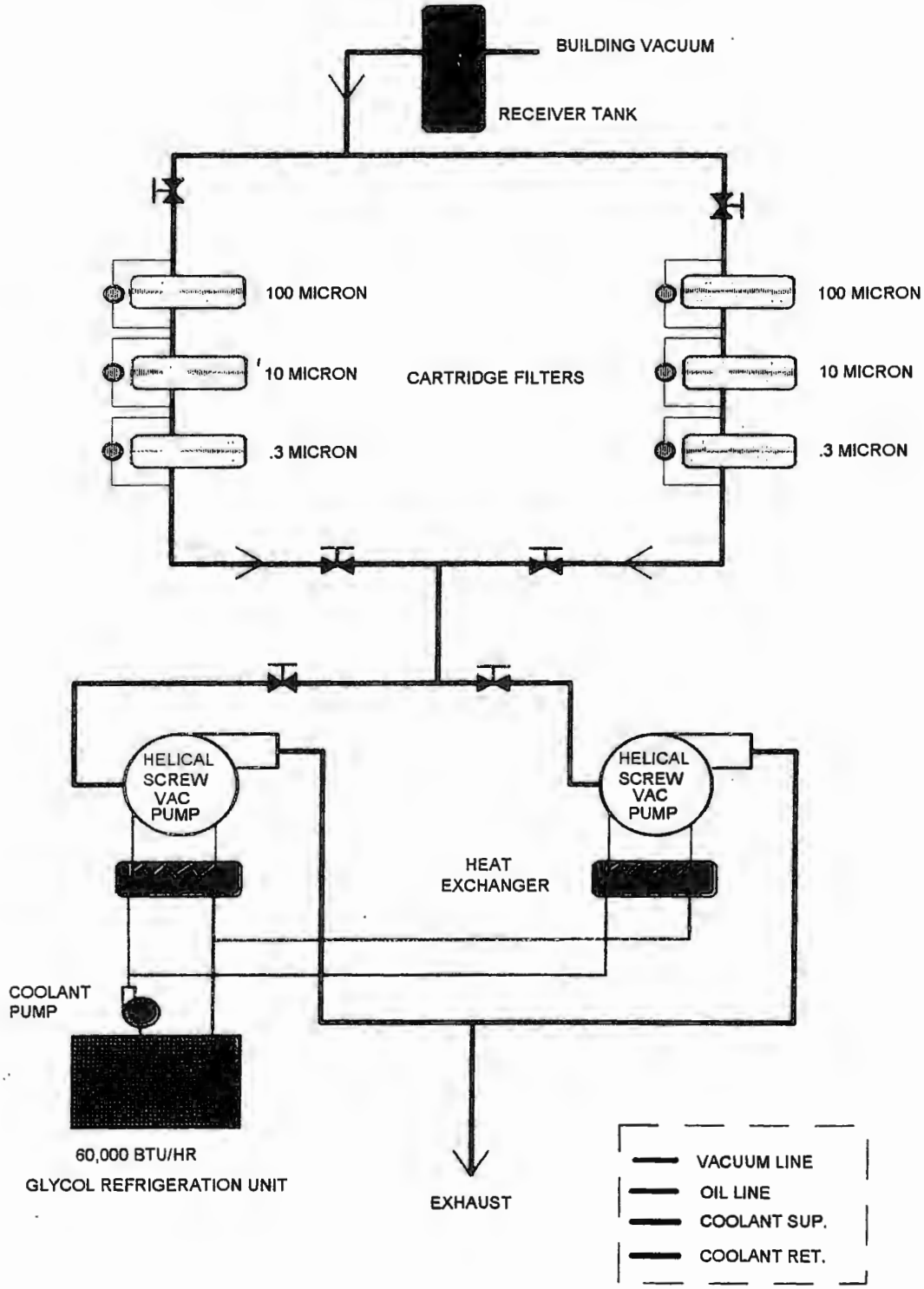

NON-DISCHARGING HE/SOLVENT VACUUM SYSTEM

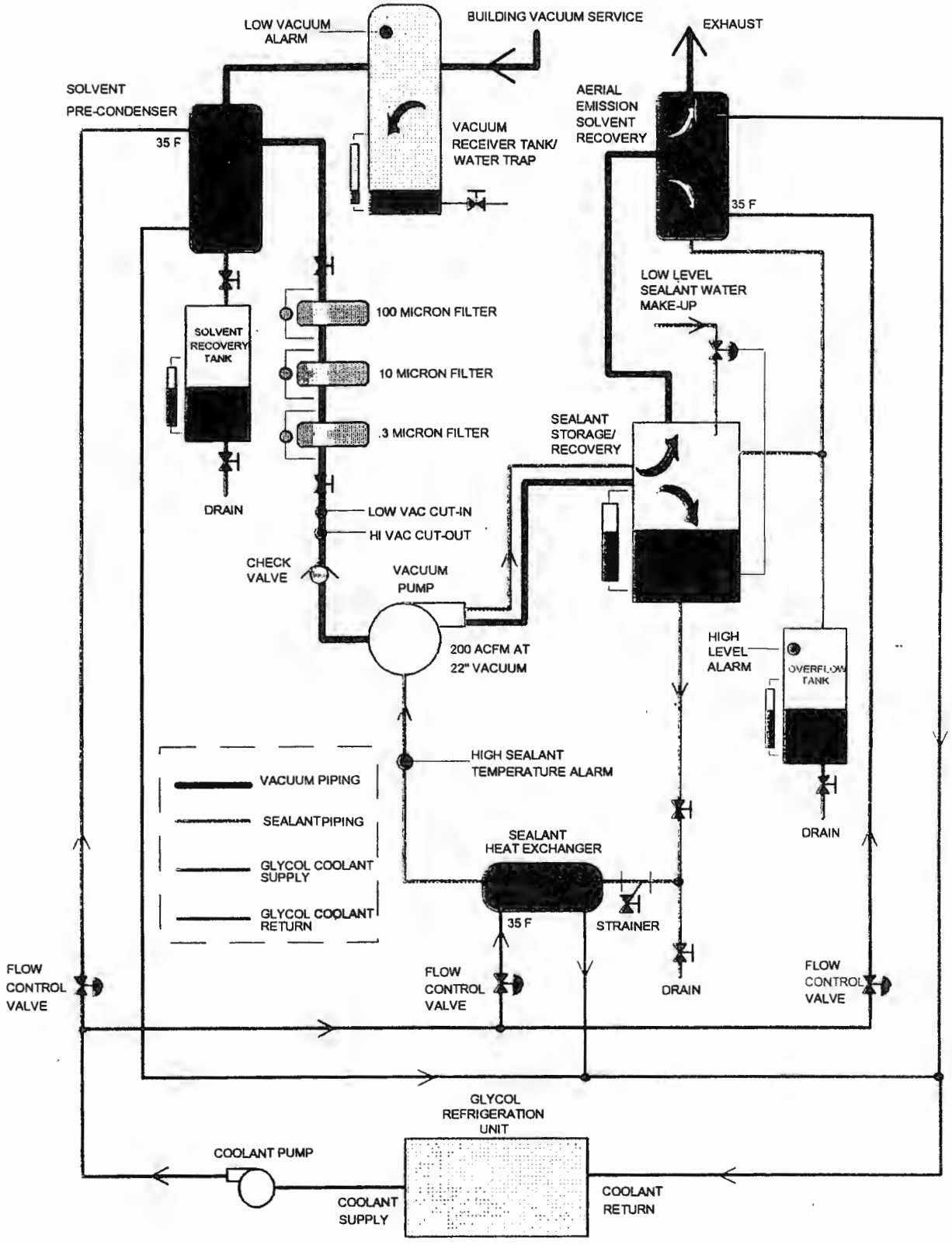

REGULATION OF HEWTF RELATED UNITS

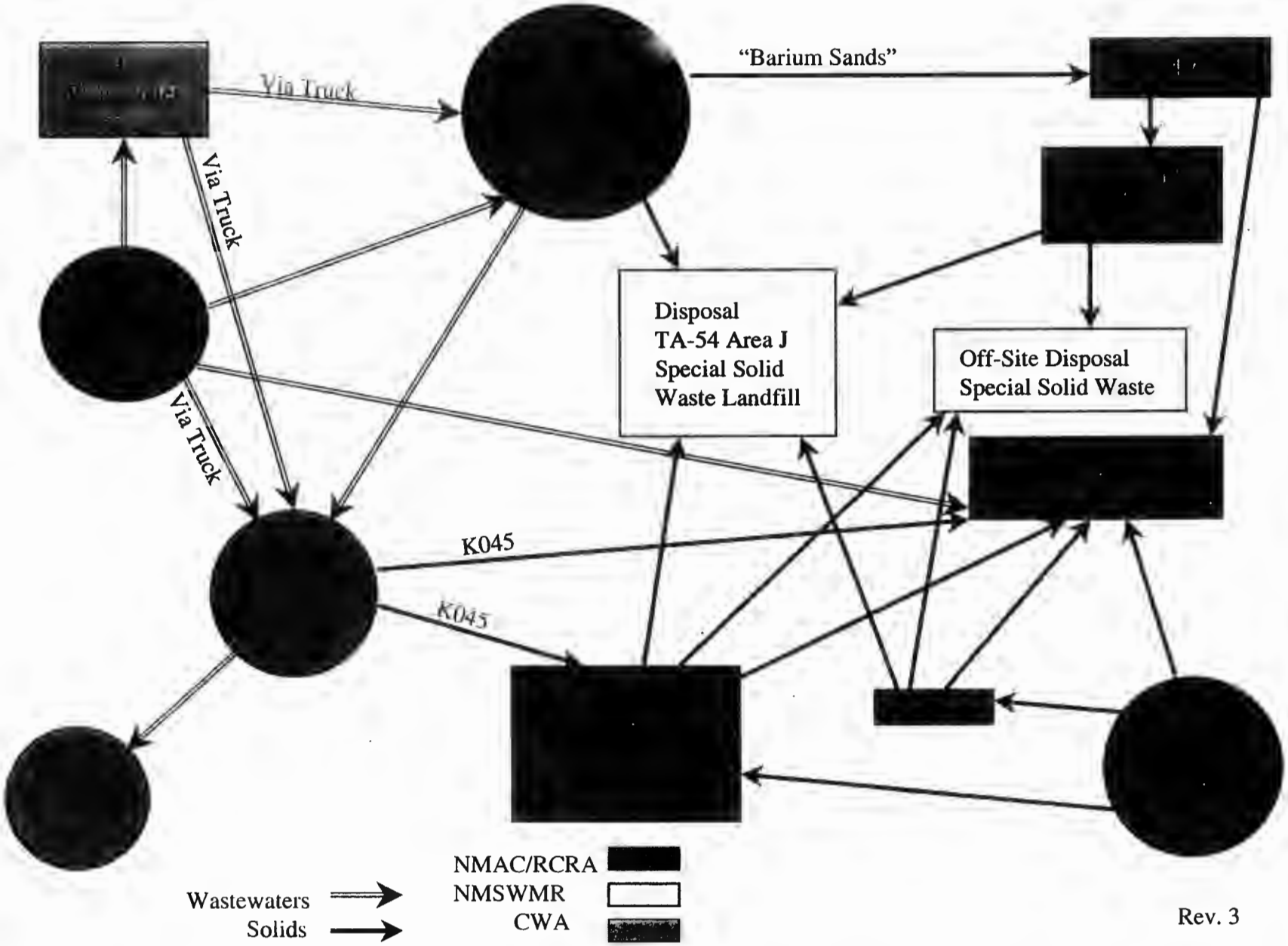

Rev. 3

TA-16 HEWTF SUMMARY

Ref: ESH-DO:98-312
November 19, 1998

INTRODUCTION:

Before completion of the current high explosives (HE) wastewater treatment program in 1997, LANL generated approximately 12 million gallons of wastewater from HE processing operations. Most of the water was treated in settling tanks (sumps) to remove HE particles, then released to the environment through National Pollutant Discharge Elimination System (NPDES) permitted outfalls. Approximately 36,000 gallons of the most highly HE-contaminated wastewater was treated with granulated activated carbon (GAC) at the old NPDES-permitted treatment facility (Figure 1) at Technical Area 16 (TA-16).

Over the past several years, the Laboratory's Engineering Sciences and Applications (ESA) and Dynamic Experimentation (DX) Divisions, with funding from the Department of Energy (DOE), have made major improvements in the HE wastewater treatment program. The purposes of these improvements were to greatly reduce the amount of HE-contaminated wastewater generated (from 12 million gallons to less than a quarter of a million gallons), provide in-operation filtration for the most heavily HE-laden wastestreams, and to treat all of HE-contaminated wastewater (except washdown and stormwater runoff from TA-11) by GAC before release.

The four LANL high explosive (HE) processes that generate the majority of HE-contaminated wastewater are:

- coolant water used for HE machining;
- wash down water used to clean bays where HE operations occur;
- sealant water used in vacuum pumps that supply vacuum service for HE machining/processing operations; and
- spray water used in explosive dust collection systems.

Water conservation was achieved by the following:

- installing HE Machine Tool Coolant Water Recirculation Systems on machining operations in TA-16-260 and TA-9-48;
- installing water conserving nozzles (high pressure, low flow nozzles) on washdown hoses;
- replacing the liquid seal vacuum systems with non-discharging systems in TA-9-21, TA-9-45, TA-16-340, TA-16-260, and TA-16-411; and
- replacing water spray HE dust collection systems with dry dust collection systems in TA-16-430.

The greatly reduced amount of wastewater is stored in sumps then trucked to a new, larger GAC system, referred to as the TA-16 High Explosives Wastewater Treatment Facility (HEWTF). The flow of wastewater is shown in Figure 2.

These changes allowed ESA and DX to reduce the number HE outfalls from the original 18 permitted under NPDES in 1994, to only two. The first is NPDES Outfall 05A055 at the HEWTF. The second is NPDES Outfall 05A097 at the TA-11 drop/burn pad, which discharges washdown water after experiments and stormwater runoff. The sump at TA-11 will still be used to removed particulate HE from the wash water. The accumulated HE from the sumps will be trucked to the HEWTF for treatment.

TA-16 HEWTF SYSTEM DESCRIPTION:

Both DX and ESA generate HE-contaminated wastewater. A brief description of the operations in each building that generates HE-contaminated wastewater follows.

DX Buildings:

DX provided the following information on the buildings that generate HE-contaminated wastewater. Wastewater sources are laboratory and HE-formulation process water, machine coolant, equipment rinse water, and bay washdown water.

Building	Function
TA-9-21	HE research and development chemistry laboratories
TA-9-32	HE characterization laboratory
TA-9-33	HE physical testing laboratory
TA-9-34	Thermal ignition and combustion laboratory
TA-9-35	HE explosive pressing laboratory
TA-9-37	HE physical testing laboratory
TA-9-38	Base hydrolysis laboratory
TA-9-40	HE ovens
TA-9-42	HE environmental chambers
TA-9-46	HE detonator facility
TA-9-48	HE machining
TA-16-340	HE formulation
TA-22-33	HE detonators

ESA Buildings:

TA-11 Drop/Burn Pad: The drop tower pad and burn pad at TA-11 are used by ESA to conduct environmental conditioning tests, including stress tests, burn tests, and explosive detonation tests.

Any large pieces of debris generated during testing are removed, the pad is swept (if necessary) and then hosed down. High explosives and small amounts of metals may be entrained in the wash water. Large pieces of metal and HE are be removed in the sump

and transported to the HEWTF when the sump is cleaned. Dissolved compounds are eliminated through NPDES Outfall 05A055.

TA-16-260: ESA performs high explosive machining and casting, inert powder operations, radiography, and inspection and measurement in TA-16-260. HE-contaminated wastewater is created during the following operations:

- emptying of the HE Machine Tool Coolant Water Recirculation System installed on each HE machining operation;
- cleaning of the machining and casting bays to prevent HE dust buildup; and
- measurement of densities of HE charges through water displacement.

The wastewater from each of these sources discharges to a sump, which is pumped out and trucked to the HEWTF for treatment prior to release.

TA-16-400: ESA uses TA-16-400 to steam clean HE-contaminated equipment. Wastewater is generated as the steam (carrying soil, oil and grease, and HE) condenses and runs down the bay troughs into a sump. The sump is pumped out when it becomes full and the wastewater is trucked to the HEWTF.

TA-16-430: ESA performs pressing of components used in weapons research and powder inspection/packaging of purchased or Laboratory formulated explosives in TA-16-430. Because these operations can create dust, they are performed under inlets to a wet dust collection system. The dust collectors contain an internal sump that occasionally must be cleaned. During cleaning, the water is released through the bay troughs to the sump. The sumps are pumped out, as needed, and their contents are trucked to the HEWTF.

Treatment Systems:

HE-contaminated wastewater treatment consists of several treatment systems:

- HE Machine Tool Coolant Water Recirculation System, used in TA-16-260 and TA-9-48 for HE machining;
- water-sealed vacuum systems for TA-9-21, TA-9-45, TA-16-340;
- sumps used to accumulate HE-contaminated wastewater;
- sumps at TA-11 used to remove large pieces of HE before discharge of the wastewater to an NPDES-permitted outfall;
- pump trucks used to transport the sump water to the HEWTF; and
- final treatment for HE-contaminated wastewater streams with granulated activated carbon (GAC) at the TA-16 HEWTF.

A brief description of each system is provided below.

HE Machine Tool Coolant Water Recirculation System

In the past, machine tools were cooled with once-through cooling water, which passed into the sumps for removal of large pieces of HE, then was released to the environment through NPDES outfalls. In 1997, recirculation systems were added to HE machining operations in TA-16-260 and TA-9-48 to remove the HE and allow reuse of the water. The design of these systems (Figure 3) is based on a similar system used at the DOE Pantex Plant. It consists of an increasingly fine series of filters and a water recirculation tank. The first set of filters, the pre-filters (Figure 4), is designed to remove coarse pieces of HE generated during machining. The wet HE is removed from these filters, placed in a less than 90-day accumulation area, and trucked to the TA-16 burn ground for destruction by burning.

Upon exiting the pre-filters, the water is pumped into the ultra-fine filtration unit (Figure 5). These filters remove any remaining HE particles greater than 0.4 microns in diameter. After filtering, the cleaned coolant water is stored in a 300-gallon storage tank located in the same bay as the filters. It is reused as coolant and treated as described above. Makeup water is added as needed.

After machining is complete, the bays are washed down to remove any spilled HE or HE dust generated during handling and machining. Usually, the water from the recirculation tank is used for this process, although potable water may also be used. The wash water then drains into sumps located at the backs of the buildings. When full, the sumps are pumped and trucked to the HEWTF.

Solvent Vacuum Systems:

Prior to 1996, water-sealed vacuum pumps were used to provide vacuum services to HE processing applications using organic solvents at TA-9-21, TA-9-45, and TA-16-340. HE and solvents that entered the vacuum systems were discharged to an NPDES outfall with the once-through pump sealant/coolant water. These systems discharged over 7 million gallons of HE-contaminated wastewater per year to the NPDES outfalls. To conserve water and reduce the amounts of solvents released in wastewater, new recirculating vacuum systems were installed. They consist of:

- a vacuum receiver tank;
- a solvent pre-condenser and solvent recovery tank (only present at TA-16-340);
- two-stage filters to remove HE particles;
- a closed-loop, water/glycol-sealed vacuum pump;
- a sealant storage vessel and heat exchanger;
- a post-pump solvent condenser to remove solvent vapors; and
- a glycol refrigeration unit.

A schematic of the system at TA-16-340 is shown in Figure 6. The systems at TA-9-21 and –45 are identical, except that there is no pre-solvent condenser.

Particulate HE will be removed in the filter system. When full, the filters will be burned at the TA-16 burn ground. Water contaminated with solvents/dissolved HE will be removed in the pre-pump solvent condenser and will be treated at the burn ground as HE-contaminated solvents. The only other wastewater generated will be from flushing of the sealant during system maintenance. This water will be contaminated with HE/solvents and will be burned on the solvent burn tray.

Sumps and Vacuum Trucks:

Sumps were used in the past to remove large particles of HE from wastewater. The water passed through a series of baffles, which caused particles to settle to the bottom while the water flowed out through an NPDES permitted outfall. Accumulated particles were periodically removed by pumping. This is still the use of the sumps at TA-11; however, all other sumps are now only used to hold wastewater. Most particulate HE is now removed by filtration upstream of the sumps. When the sumps are full, they are pumped and the water is trucked to the HEWTF. Procedures for pumping the sumps and transporting the wastewater to the TA-16 burn grounds are maintained on-site.

TA-16 HEWTF:

The HEWTF is the final treatment system for all of the HE-contaminated wastewater except that eliminated through the TA-11 outfall. A schematic of this system is shown in Figures 7 and 8 and documented in the Laboratory's NPDES Permit Re-Application, dated May 4, 1998. Please note, the old HEWTP can be used as a back-up treatment facility (See Figure 2).

HE-contaminated wastewater is trucked from its point of origin (building sumps, drilling water, etc.) to the TA-16 burn grounds. There, if the wastestream is heavily laden with HE, soil, or other particulate matter, it will be discharged into one of two RCRA-permitted sand filters then flow into a manhole, which holds the waste until it is ready for treatment. Low-solid wastestreams can be discharged directly into the manhole. The wastewater flows from the manhole through a 100 micron and two parallel 20 micron filters, into a 3000-gallon equalization tank. This above-ground tank is double walled and equipped with leak detection for the primary steel reservoir located above ground. Liquid in the tank is automatically monitored for pH, temperature, and dissolved oxygen. The wastewater is pumped from the tank into the GAC train. This train consists of two vessels, connected in series. Each vessel consists of a 36-inch diameter by 6-foot high tank containing 500 pounds of GAC. The wastewater passes first through the upstream (more contaminated) vessel then through the downstream (cleaner) vessel. There is an identical parallel train to allow one train to be operated while the GAC in the other is being regenerated or removed. Treated effluent from the carbon beds into one of two 3000-gallon double containment post treatment tanks with leak detection. Piping to the tanks is equipped with a pH monitor/controller and a carbon dioxide feed control system. Spent carbon will be thermally treated at the TA-16 RCRA-permitted Burn Ground. A flow schematic of solids disposal is shown in Figure 9.

LANL HIGH EXPLOSIVES WASTEWATER TREATMENT FACILITY FLOW DIAGRAM
OLD FACILITY – Bldg. 363
PROCESS SCHEMATIC
FIGURE 1

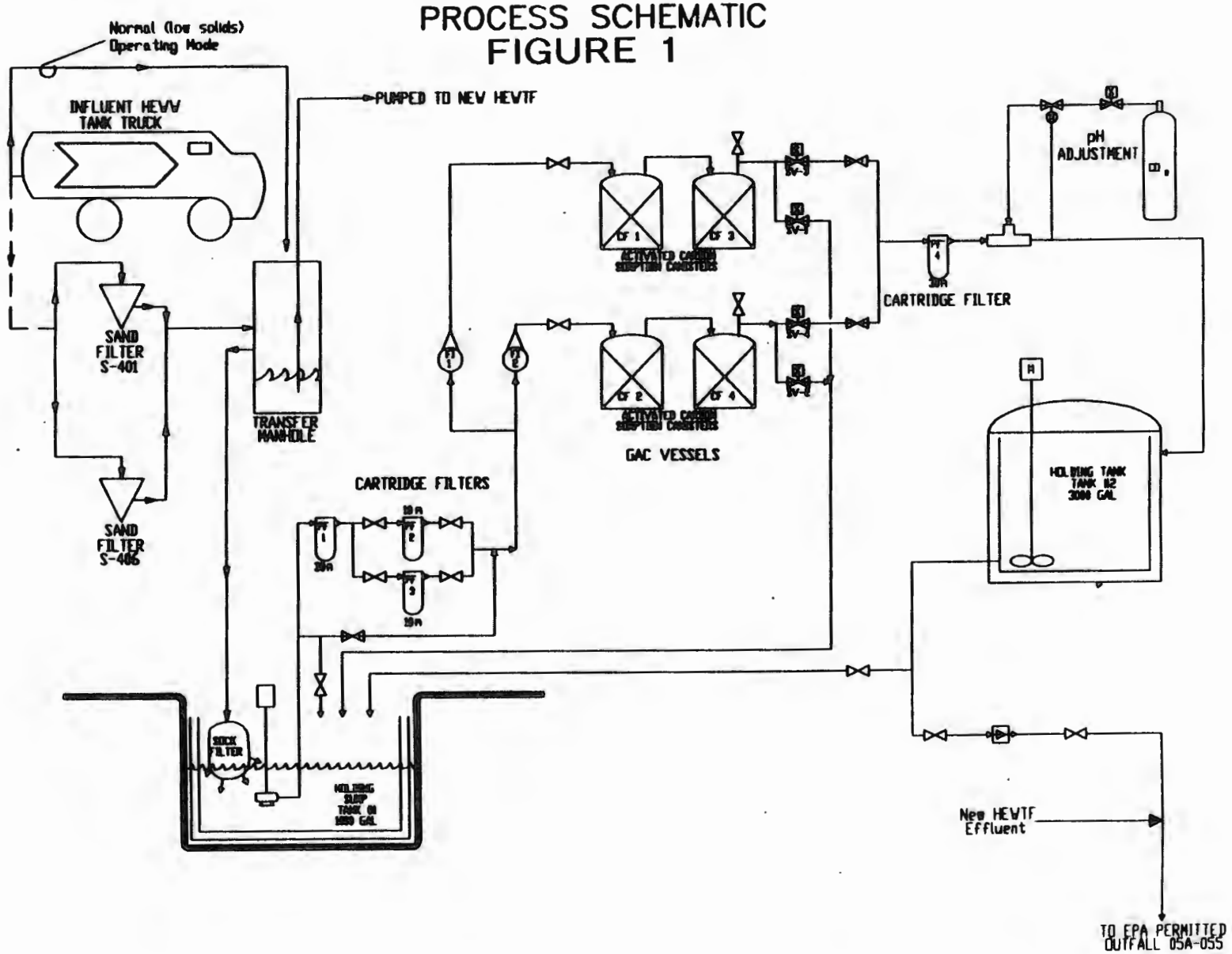

ESH-18 | MV | 3/3
JANUARY 1999

High Explosives (HE) Wastewater Minimization, Collection and Treatment Systems

Figure 2

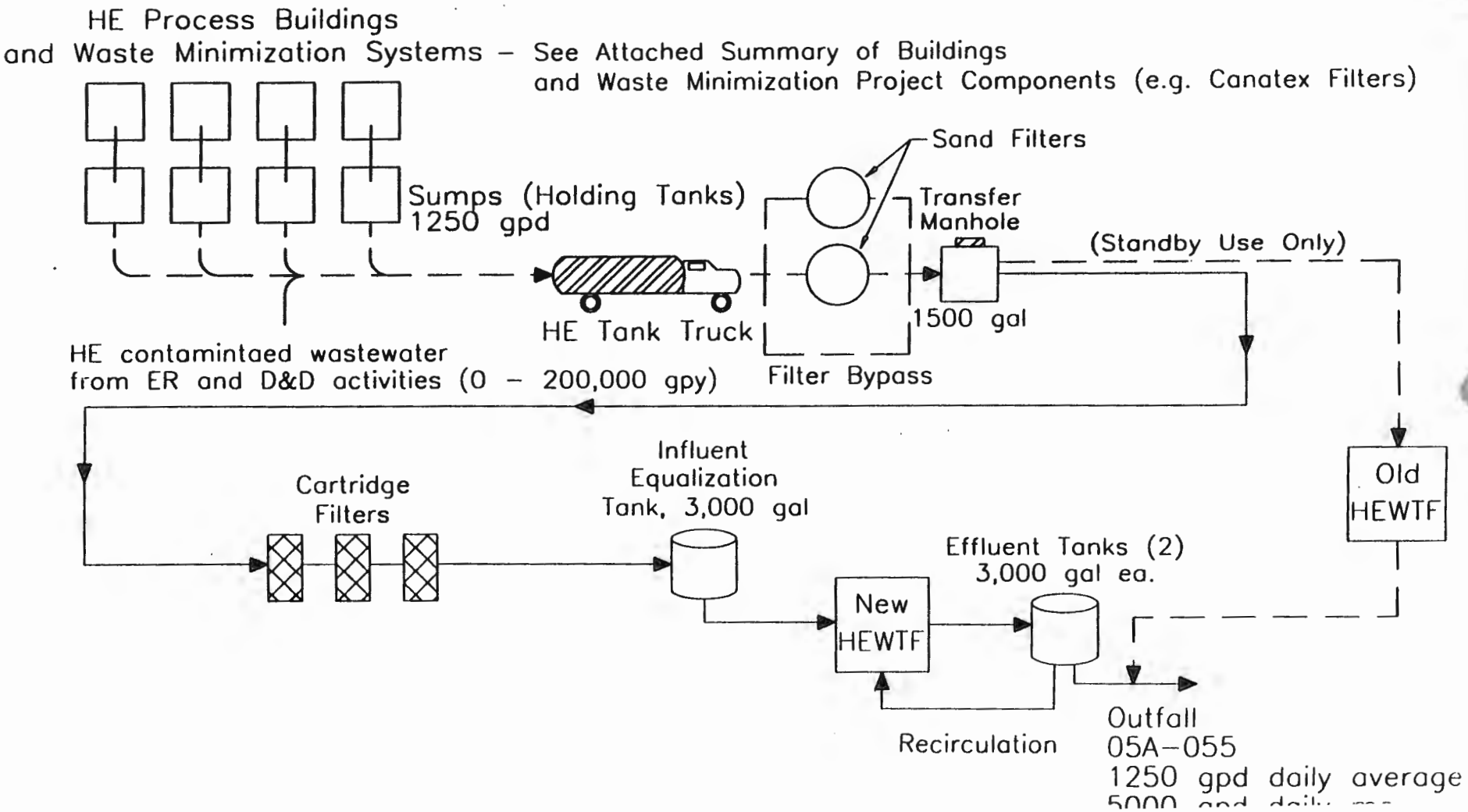

HE MACHINE TOOL COOLANT RECIRCULATION SCHEMATIC

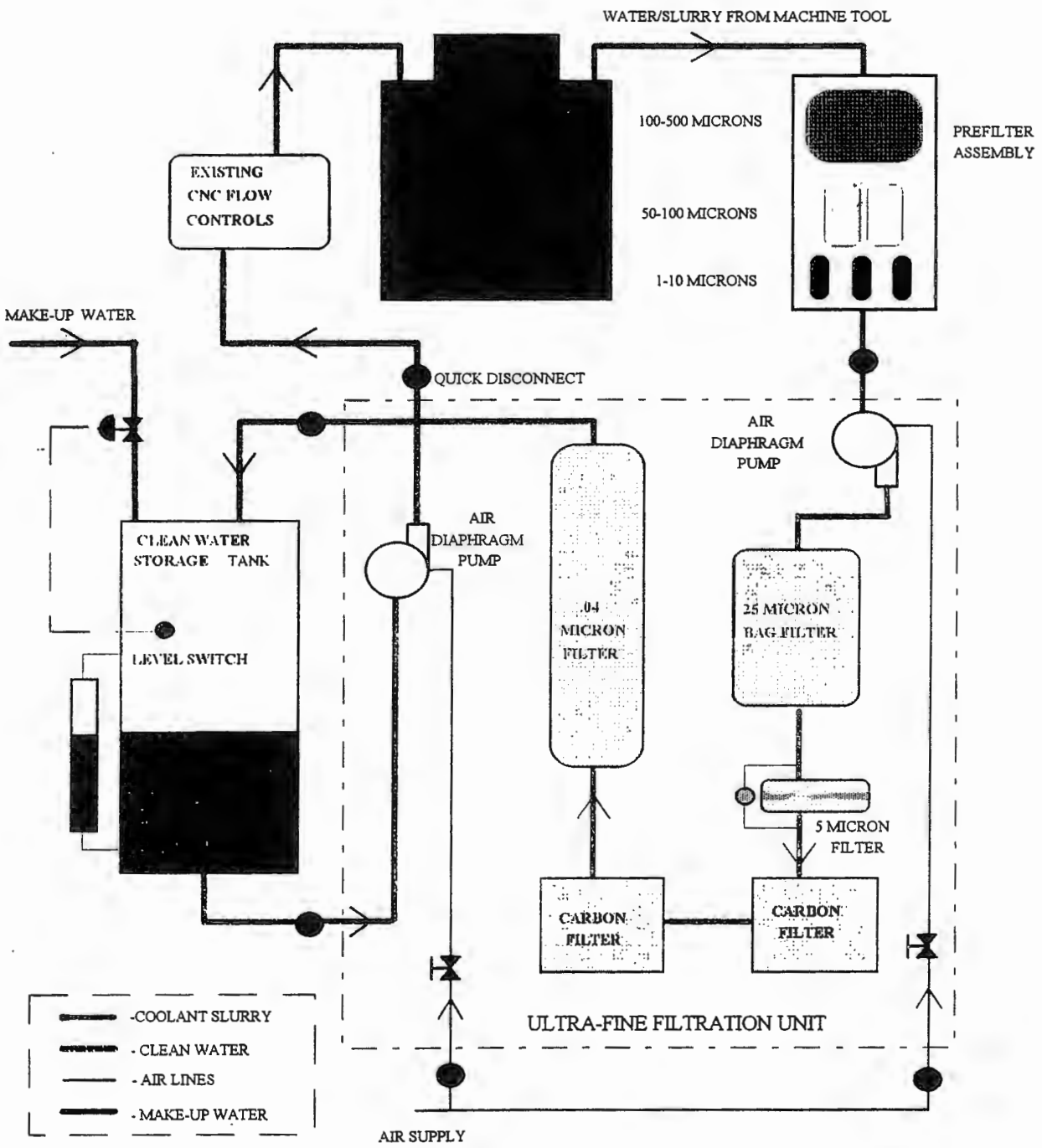

FIGURE 3

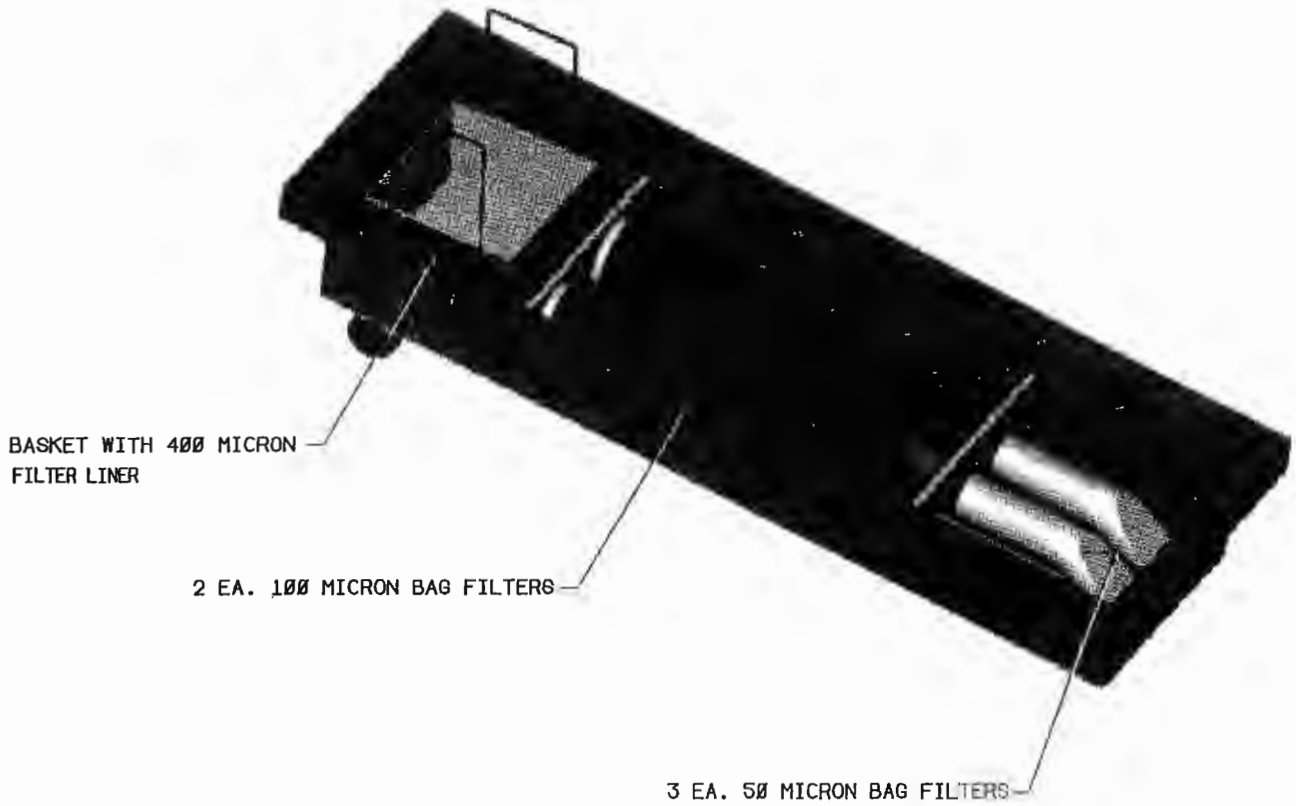

FIGURE 4 MACHINE TOOL COOLANT PREFILTER ASSEMBLY

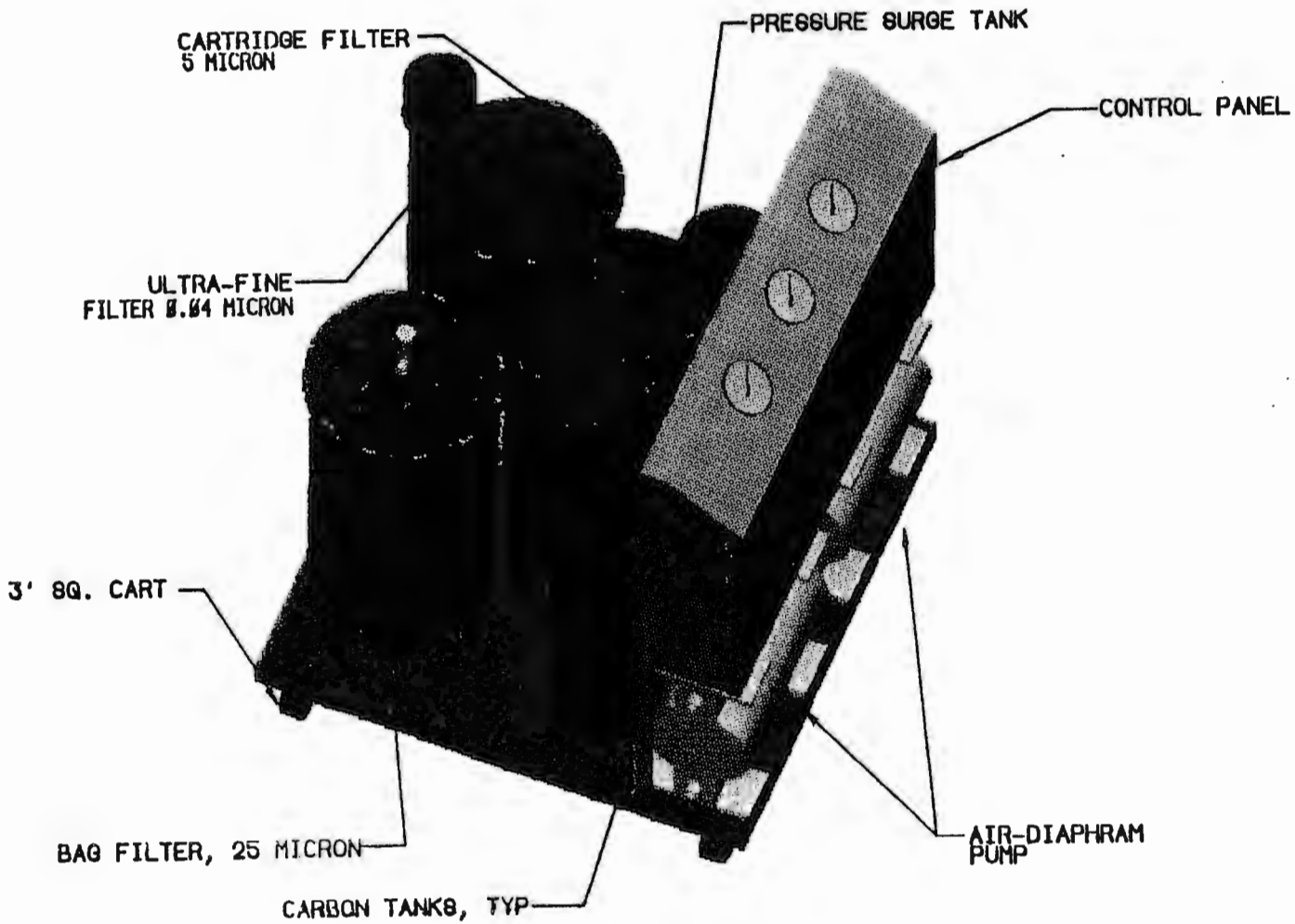

FIGURE 5 ULTRA-FINE FILTER ASSEMBLY

NON-DISCHARGING HE/SOLVENT VACUUM SYSTEM

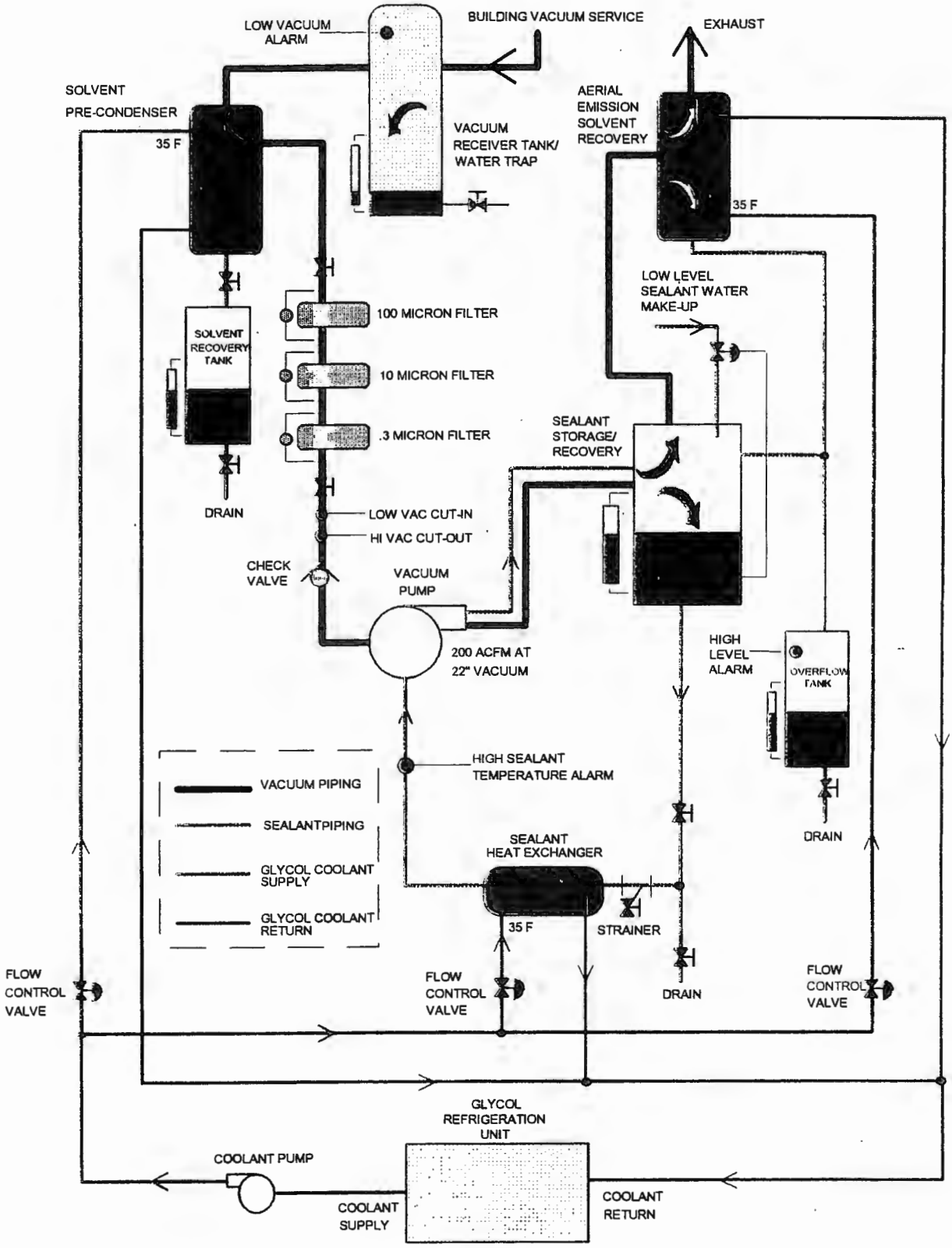

FIGURE 6

TA16-1508 HIGH EXPLOSIVE WASTE TREATMENT FACILITY
OUTFALL # 05A055
FIGURE 7

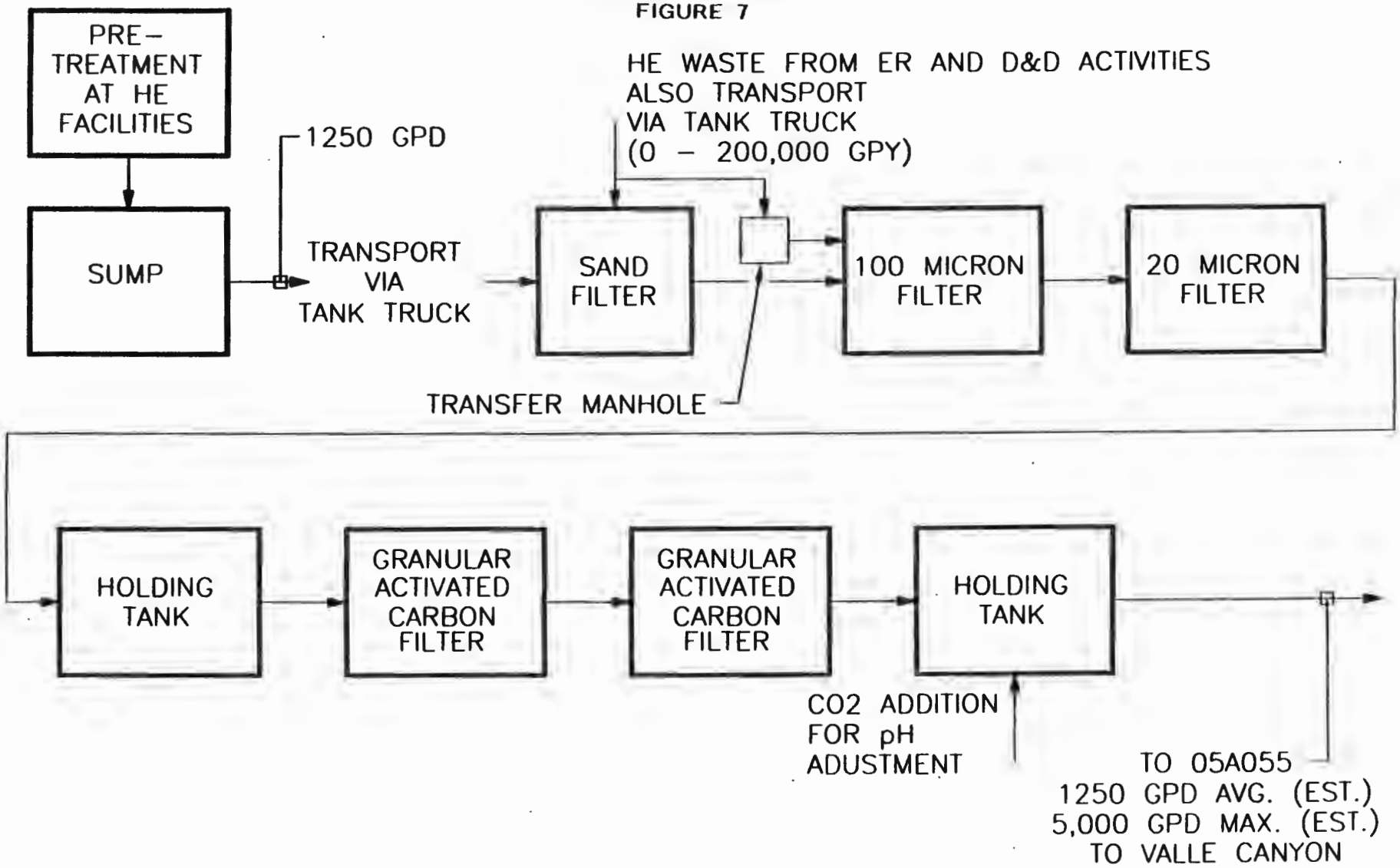

LANL HIGH EXPLOSIVES WASTEWATER TREATMENT FACILITY
NEW FACILITY – Bldg. 1508
PROCESS SCHEMATIC
FIGURE 8

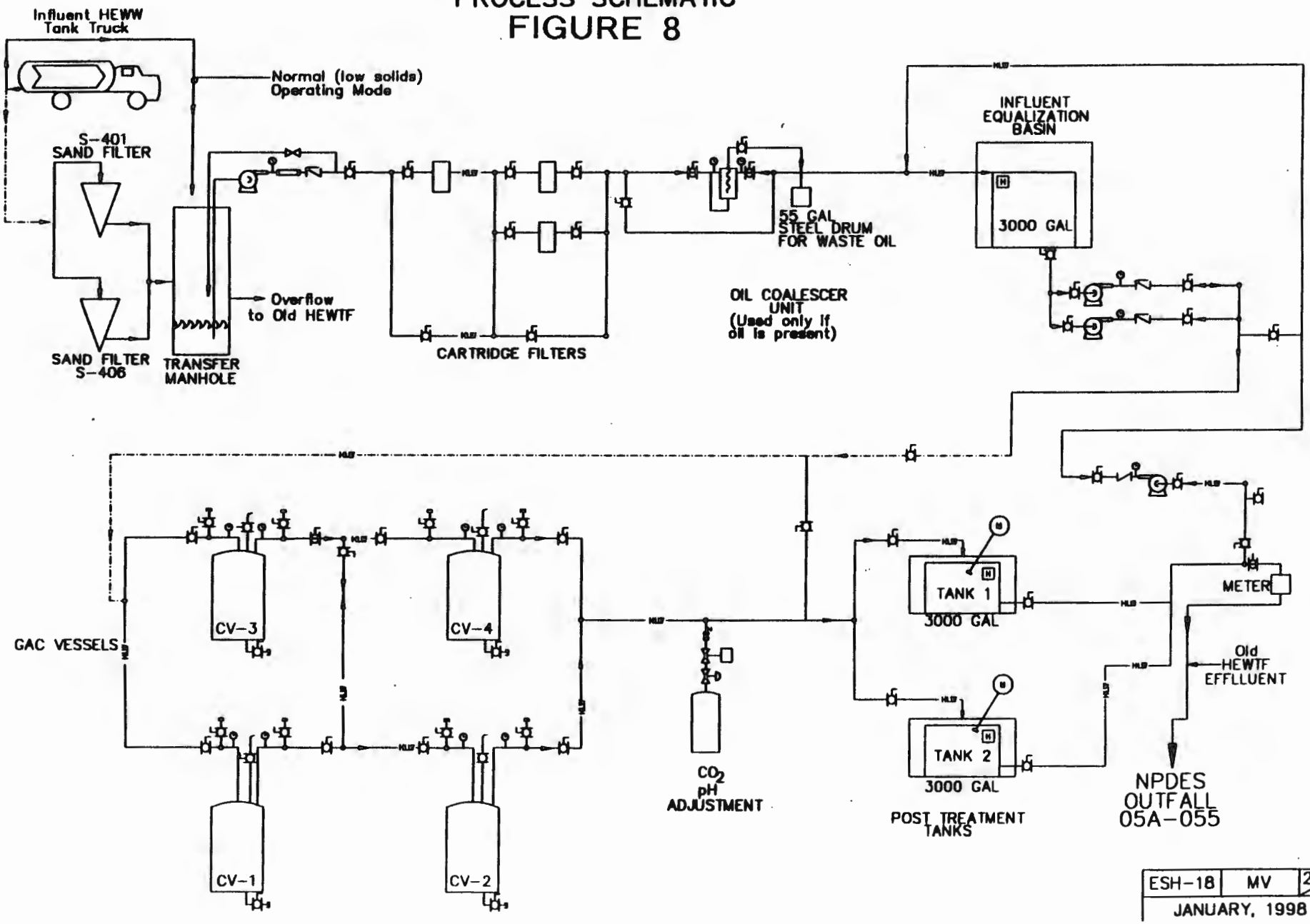

ESH-18	MV	2/3
JANUARY, 1998		

REGULATION OF HEWTF RELATED UNITS

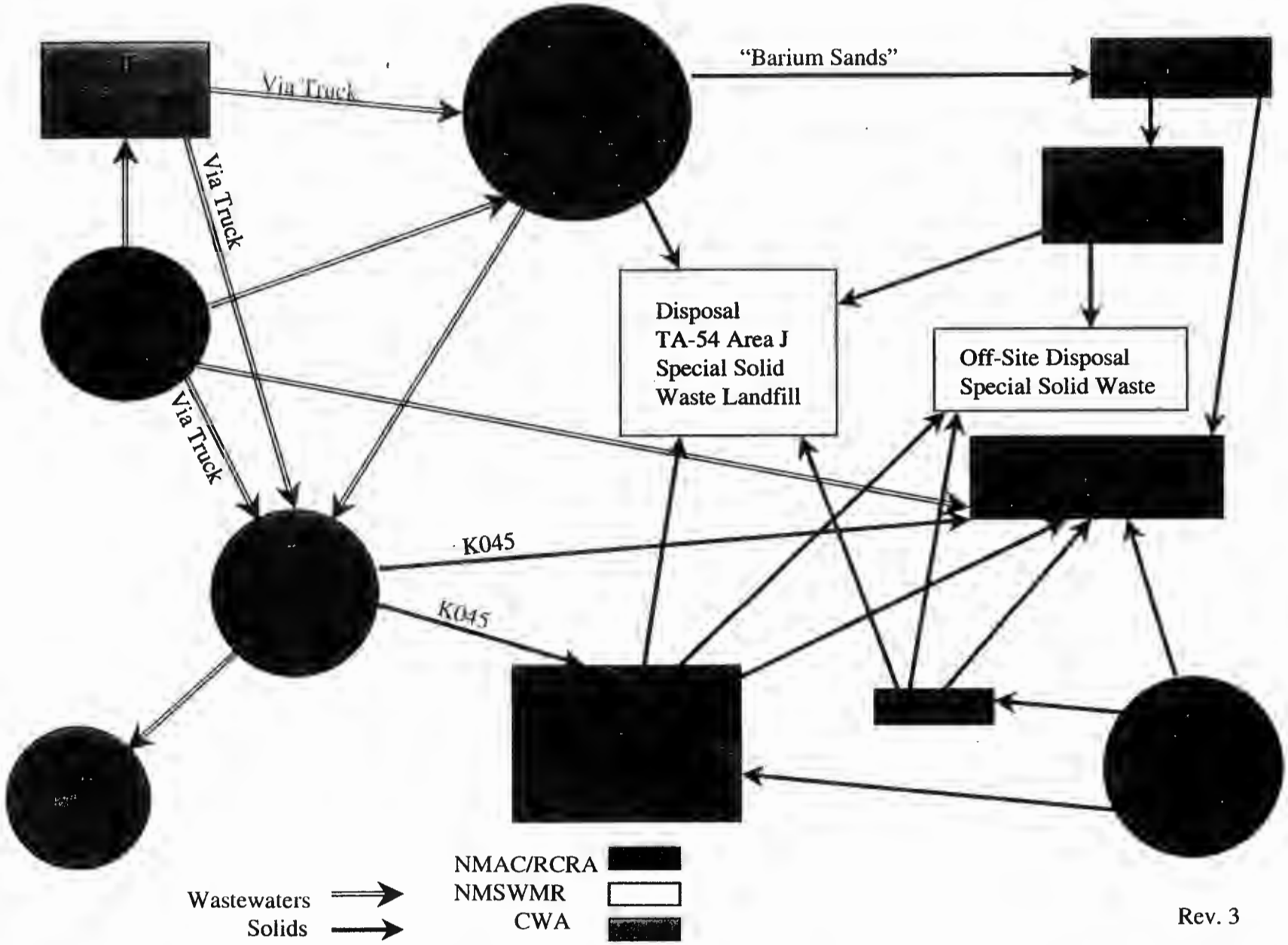

Rev. 3

FIGURE 9