LIBRARY COPY

Contract 003CT0008-8L
Project No. 801448.02.00.00.05
September 2000

Subject Matter Clarification Technical Area (TA) 16 Part B Permit Renewal Document, Revision 3.0

Los Alamos National Laboratory

Draft

Prepared by:

Los Alamos National Laboratory
Hazardous and Solid Waste Group (ESH-19)
Los Alamos, New Mexico 87545

6255

SUBJECT MATTER CLARIFICATION
TECHNICAL AREA (TA) 16 PART B PERMIT RENEWAL DOCUMENT

This document provides additional information for the "Los Alamos National Laboratory Technical Area 16 Part B Permit Renewal Document" (TA-16 Part B), most recently submitted to the New Mexico Environment Department (NMED) in January 2000 as Revision 3.0. The need for and form of this information has been discussed and developed with the NMED through the Permit Working Group (PWG), which consists of representatives from the NMED Hazardous Waste Bureau (HWB), the U.S. Department of Energy, and the University of California. On August 14, 2000, the PWG agreed that subject matter clarification would be consolidated by topic and submitted to the NMED in a narrative form. The document consists of a discussion with five topics (process operations, hydrogeology, environmental data, pathways, and miscellaneous information) and six supporting attachments. Attachment A contains revisions to Attachment H of the TA-16 Part B. If acceptable, the attachment can be used to replace the original Attachment H.

PROCESS OPERATIONS

Ash Management

Due to safety concerns, ash is not removed after treatment at the TA-16 Burn Ground Unit for a minimum of 24 hours. For safety, the U.S. Department of Energy (DOE) Explosives Safety Manual (DOE M 440.1-1) requires that:

- "No entry should be allowed into the disposal area until 8 hours have elapsed unless it can be determined through visual observation that all explosives have been destroyed" and
- "At least 24 hours shall elapse before ashes are collected."

The manual is available on the web at:

http://www.explorer.doe.gov:1776/htmls/regs/doe/newserieslist.html.

In accordance with the requirement, ash is left on the burn structure for this period. Ash is usually removed and drummed immediately after the 24-hour period unless:

- The waste is not completely treated. For instance, if the high explosives (HE) spot test shows that there is still HE contamination, the waste is left on the structure, covered, and treated again as soon as weather conditions permit.
- The ash is not homogenous and separate samples from different parts of the ash surface are required. In these cases, the ash is covered until the sampler can be scheduled (usually a day or two). As soon as the samples are taken, the ash is drummed.

The following measures are used to minimize ash dispersal:

- Burning is not conducted during periods of high winds, as prescribed by Los Alamos National Laboratory's (LANL's) Open Burning Permit (current Permit No. AQB.97.214, effective August 18, 1997).

- Ash production has been minimized through the use of propane instead of wood as a fuel.
- For waste types likely to generate ash (e.g., cardboard boxes, wipes), the waste is covered by a screen prior to burning.
- Ash is removed as soon as practicable.

Any ash generated during treatment is characterized as newly-generated waste, as required in the LANL General Part B Waste Analysis Plan.

Number of Treatment Devices That Could Operate Simultaneously

All of the structures (TA-16-388, TA-16-399, TA-16-401, and TA-16-406) could be used in a single day. This would be the exception rather than the general practice.

Temperature Levels and Necessary Time to Achieve HE Degradation

Thermal test results are used to establish the minimum temperature to which the HE must be heated to ensure decomposition. The thermal tests used for determining these parameters include Differential Scanning Calorimetery, Henkin Time-to-Explosion Test, and large scale burn tests. All HE used at LANL is tested and the data analyzed. The temperature at which the most stable HE decomposes is used to set the lower limit for the thermal treatment process. Using these analyses, a minimum temperature of 400 degrees centigrade (°C) has been identified as the level needed to thermally degrade the types of HE that LANL uses. For incombustible solids, thermocouples are placed on the materials to be treated and temperatures are monitored to ensure the 400 °C requirements are met. The necessary treatment time will vary, but is generally less than one hour. The material is completely treated when all thermocouples stabilize at the minimum temperature, indicating that the material is heated throughout. For liquids, heat is applied until the liquids are consumed. Any residue remaining is heated to a minimum of 400 °C, as indicated by thermocouples. Should this temperature not be reached, the waste could potentially still be explosive and would require additional treatment.

Wetting of the Burn Area Before and After Operation

Before burning, wetting is done around the structure being used only when vegetation is dry enough to create a potential fire danger. A garden hose is used and only the surface is wetted. The amount of water used is not enough to cause ponding, erosion, or act as a driving force for dispersing legacy contamination from past uses of the area. Wetting is not done after burning, unless a fire occurs.

HYDROGEOLOGY

Information on the hydrogeology in the region of TA-16 is provided as Section H.3.1 in revised Attachment H of the TA-16 Part B, included herein as Attachment A. An overview of this information was provided during a PWG meeting on August 14, 2000.

ENVIRONMENTAL DATA

Air, water, soil, meteorological, and other environmental data (e.g., sampling of foodstuffs) are published annually in the report titled "Environmental Surveillance and Compliance at Los Alamos" (referred to as the Surveillance Report). A copy of the most recent Surveillance Report was provided during the PWG meeting on August 14, 2000. Reports are produced annually and two copies are sent to the NMED. Specific project information (e.g., that generated by the Environmental Restoration [ER] Project and submitted directly to the HWB) that does not appear in the Surveillance Report is cited/provided in the following sections.

Surface and Groundwater Quality

The most recently published information on Laboratory-wide surface water and groundwater quality is included as Section 5 of the 1998 Surveillance Report and in the "Groundwater Annual Status Report for Fiscal Year 1999."

Additional sampling near the TA-16 Burn Ground was conducted in 1999 and 2000 at Characterization Well R-25, located west of the Burn Ground. The 1999 data are available in draft form and are included in Attachment B. The 2000 data are not yet available. The possible sources of contamination have not yet been identified, but it is suspected that the TA-16-260 outfall location is the major contributor. Surface water data from samples taken in Cañon de Valle (see Attachment C) indicate that the TA-16-260 outfall and Material Disposal Area P (MDA-P) are the major contributors of contaminants to the canyon. The TA-16 Burn Ground Unit drains toward a tributary that joins Cañon de Valle about 10,000 feet downstream from the TA-16-260 outfall.

Two groundwater wells are being installed down gradient of S-Site in 2000 (R-19 at TA-36 and CDV-R-15-3 at TA-15). A schematic showing the well locations is included in Attachment D. The CDV-R-15-3 well was sited to characterize the vertical and horizontal extent of contamination identified in the R-25 well. Characterization Well R-19 was sited as a regional groundwater well to characterize intermediate perched groundwater and the regional groundwater aquifer. Data are not yet available from these wells.

Known Soil Contamination

Data on the known soil contamination immediately adjacent to the TA-16 Burn Ground are included in Attachment E. These data are from surface samples that represent legacy contamination and were collected by the ER Project. The ER Project has not yet conducted subsurface sampling in the area immediately adjacent to the TA-16 Burn Ground Unit.

Subsurface data were collected for the 1995 MDA-P closure plan and submitted as Appendix D to that plan. The chemical data collected were from soils and other materials in or adjacent to MDA-P. The contamination has largely been removed as part of the closure of MDA-P. Samples have not yet been taken of the tuff beneath MDA-P; the sampling plan is awaiting NMED approval.

The only subsurface data that will be available near the TA-16 Burn Ground Unit in the near future are being collected as part of the TA-16-394 Burn Tray closure. These data are not yet available but will be submitted to the HWB as part of the closure report.

Air Quality

The only site near the TA-16 Burn Ground Unit designed to characterize ambient air for Federal and New Mexico ambient air quality standards was located at TA-49. This site was operated jointly in the early 1990's by the NMED, LANL, and the National Park Service. The data from this site reside in the NMED air quality database and have recently been provided to the HWB by LANL's Engineering Sciences and Applications Division. LANL operates a number of other air quality sites at and in the region surrounding the Laboratory, mainly to monitor radionuclides. The results from all sites are published in the annual Surveillance Report and can be obtained on the web at: http://www.esh.lanl.gov~AirQuality.

The Surveillance Report also summarizes meteorological information, including temperature, wind speed and direction, and precipitation. Current and historical meteorological data are available on the web at: http://weather.lanl.gov.

PATHWAYS

The routes and pathways of exposure are discussed in Attachment F of this document. On July 20, 2000, NMED and LANL air quality representatives provided an overview of the NMED open burning permit process. These representatives discussed emissions factors, air dispersion modeling, and meteorological conditions under which open burning may be conducted. On August 14, 2000, LANL and NMED representatives discussed how legacy contamination will be addressed through the Resource Conservation and Recovery Act corrective action process, which will include a formal risk assessment.

MISCELLANEOUS

Flora, Fauna, and Physical Structures

Flora and Fauna: The dominant trees within the mesa overstory vegetation are ponderosa pine and mixed conifer. The mesatop shrub layer is primarily composed of Gambel oak and New Mexico locust. Dominant forbs and grasses include bluegrass, mountain muhly, blue grama, pine dropseed, wormwood, false tarragon, tall lupine, and cinquefoil.

Federal threatened and endangered and New Mexico sensitive plants that could potentially inhabit the area include Checker lily, Sandia alumroot, Wood lily, and Pagosa phlox. None of these species have been found in the area. Federal threatened and endangered and New Mexico sensitive animals that could potentially inhabit the area include the Northern goshawk, the Common blackhawk, the Broad-billed hummingbird, the Willow flycatcher, the Spotted bat, the Peregrine falcon, the Bald eagle, the Mississippi kite, the Pine marten, the Say's pond snail, the Jemez Mountains salamander, the Mexican spotted owl, and the Meadow jumping mouse. The Mexican spotted owl is the only endangered species documented near the Burn Ground; however, the TA-16 Burn Ground Unit is not located in the type of habitat (i.e., wooded canyons) occupied by this species.

Protection of Other Structures: The DOE Explosives Safety Manual governs the storage, usage, and handling of all HE at LANL. This manual uses the Department of Defense's criteria to prescribe minimum distances between HE facilities and inhabited structures, access points, and the public. Based on these requirements, the Burn Ground is sited at a remote location.

Ignition of wastes is done remotely from TA-16-389, a reinforced concrete building located approximately 300 feet from the nearest burn structure.

Floodplain Standard

LANL is currently preparing a response to the NMED DOE Oversight Bureau's June 26, 1998, letter commenting on the 100-year floodplain report. LANL anticipates submitting this response to the Oversight Bureau in September 2000. The response will address the issues presented in the NMED letter and conform to discussions held during the PWG meeting on July 27, 2000. New information being developed as a result of the Cerro Grande Fire will be discussed in the response.

Personnel in LANL's Water Quality and Hydrology Group are revising floodplain maps for LANL, and expect to have them available within a year. While there is technical disagreement between the Oversight Bureau and LANL on aspects of the floodplain report, both parties agree the treatment, storage, and disposal activities at LANL would not be affected by a 100-year flood. With the exception of TA-39-57, no waste management units are identified in the list, "LANL Buildings Potentially Within Floodplain," included as Appendix G in the above-referenced comments. As the floodplain location standard in the New Mexico Administrative Code, Title 20, Chapter 4, Part 1, Subpart V, 264.18(b)(1), is not an issue, there can be no permit concern regarding this standard. Although the information that will be used to develop the revised floodplain maps will be available within a year, a newly-published and peer-reviewed floodplain report will take more time to prepare.

Contingency Plan

The contingency plan is kept at TA-16-389, the control building for the TA-16 Burn Ground Unit.

Closure Plan

The closure plan for the TA-16 Burn Ground Unit included in the draft version of the "Los Alamos National Laboratory Hazardous Waste Facility Permit, Chapter 5, Technical Area 16 Conditions," submitted to the NMED HWB in June 2000, was prepared to include soil sampling. During a PWG meeting on May 11, 2000, it was agreed that sampling of other environmental media would be conducted during post-closure if it is determined that post-closure care is required. The issue of removing ash residue will be clarified when all comments on the draft version of Chapter 5 have been received and the comment incorporation process begins.

Waste Staging

If burning is delayed at the TA-16-388 Flash Pad, a cover is placed over the waste. Attachment H of the TA-16 Permit Renewal Document, included herein as Attachment A, has been revised to reflect this clarification.

ATTACHMENT A

REVISED ATTACHMENT H

DRAFT

ATTACHMENT H

TA-16 BURN GROUND UNIT MANAGEMENT

DRAFT

TABLE OF CONTENTS

LIST OF TABLES iii
LIST OF FIGURES iv
LIST OF ABBREVIATIONS/ACRONYMS v
LIST OF SUPPLEMENTS vi

TA-16 BURN GROUND UNIT MANAGEMENT H-1
H.1 TA-16 BURN GROUND UNIT STRUCTURES H-1
H.1.1 TA-16-388 Flash Pad/Burn Tray H-1
H.1.1.1 TA-16-388 Flash Pad H-2
H.1.1.2 TA-16-388 Burn Tray H-4
H.1.2 TA-16-399 HE Burn Tray H-5
H.1.3 TA-16-401 and TA-16-406 Sand Filters H-6
H.2 OPERATIONAL AND WASTE MANAGEMENT PRACTICES H-8
H.2.1 General Burning Procedures H-8
H.2.2 Waste Staging H-10
H.2.3 Waste Management Practices H-11
H.2.4 Treatment Effectiveness H-13
H.2.5 Ignitable, Reactive, and Incompatible Wastes H-13
H.2.6 Security and Access H-13
H.2.7 Preparedness and Prevention Requirements H-14
H.2.7.1 Required Equipment H-14
H.2.7.2 Testing and Maintenance of Equipment H-14
H.2.7.3 Access to Communications or Alarm Systems H-15
H.2.7.4 Space Requirements H-15
H.2.7.5 Support Agreements with Outside Agencies H-15
H.2.7.6 Preventive Procedures, Structures, and Equipment H-15
H.2.7.7 Prevention of Accidental Ignition or Reaction of Ignitable, Reactive, or Incompatible Waste H-17
H.2.8 Volatile Organic Air Emission Standards H-17
H.3 ENVIRONMENTAL PERFORMANCE STANDARDS H-18
H.3.1 Hydrogeology in the Region of TA-16 ..... H-18
H.3.1.1 Geology H-18
H.3.1.2 Structure H-19

DRAFT

TABLE OF CONTENTS (continued)

H.3.1.3 Surficial Deposits H-20
H.3.1.4 Groundwater H-20
H.3.1.5 Surface Water H-22
H.3.1.6 Hydrologic Conceptual Model H-23
H.3.2 Protection of Groundwater/Vadose Zone H-23
H.3.3 Protection of Surface Water/Wetlands and the Soil Surface H-25
H.3.4 Protection of the Atmosphere H-26
H.4 REFERENCES H-27

DRAFT

LIST OF TABLES

TABLE NO.	TITLE
H-1	Miscellaneous Unit Regulatory References and Corresponding Permit Renewal Document Location

DRAFT

LIST OF FIGURES

FIGURE NO.	TITLE
H-1	Site Location Map for Technical Area (TA) 16 Burn Ground Unit
H-2	Technical Area (TA) 16 Burn Ground Unit
H-3	Technical Area (TA) 16-388 Flash Pad/Burn Tray
H-4	Technical Area (TA) 16-388 Flash Pad
H-5	Technical Area (TA) 16-388 Burn Tray
H-6	Technical Area (TA) 16-399 HE Burn Tray
H-7	Technical Area (TA) 16-401 and TA-16-406 Sand Filters

DRAFT

LIST OF ABBREVIATIONS/ACRONYMS

AEHA	U.S. Army Environmental Hygiene Agency
BTU/hr	British thermal units per hour
°C	degrees centigrade
DOE	U.S. Department of Energy
EPA	U.S. Environmental Protection Agency
ESA	Engineering Science and Applications
ft	feet/foot
FY	fiscal year
HE	high explosives
HWP	Hydrogeologic Workplan
LANL	Los Alamos National Laboratory
20 NMAC 4.1	New Mexico Administrative Code, Title 20, Chapter 4, Part 1
NMED	New Mexico Environment Department
NPDES	National Pollutant Discharge Elimination System
OB	open burning
PPE	personal protective equipment
PTLA	Protection Technology Los Alamos
RCRA	Resource Conservation and Recovery Act
SOP	standard operating procedure
SWPP	Storm Water Pollution Prevention
TA	technical area

DRAFT

LIST OF SUPPLEMENTS

SUPPLEMENT NO.	TITLE
H-1	The New Mexico Environment Department's August 17, 1995, Letter to the Department of Energy Los Alamos Area Office Regarding Comments Concerning Groundwater Contamination and Protection at Los Alamos National Laboratory (LANL), Los Alamos, New Mexico.

DRAFT

ATTACHMENT H

TA-16 BURN GROUND UNIT MANAGEMENT

The information provided in this attachment is submitted to address the applicable miscellaneous unit requirements of the New Mexico Administrative Code, Title 20, Chapter 4, Part 1 (20 NMAC 4.1), Subpart IX, 270.23, and 20 NMAC 4.1, Subpart V, Part 264, Subpart X, revised June 14, 2000 [6-14-00], as well as thermal treatment requirements in 20 NMAC 4.1, Subpart VI, Part 265, Subpart P [6-14-00]. This attachment provides an overview of current facility operations and waste management practices for the Technical Area (TA) 16 Burn Ground Unit and complements the information provided in Section 2.0 of this permit renewal document. It includes detailed descriptions of the open burning (OB) treatment structures, their locations within the Burn Ground Unit, and the current operational and waste management practices associated with them. Requirements for treatment effectiveness; ignitable, reactive, and incompatible wastes; security and access; preparedness and prevention; volatile organic air emission standards; and environmental performance standards are also discussed. Table H-1 summarizes applicable regulatory references for miscellaneous units and the corresponding location where the requirement is addressed in this permit renewal document.

The TA-16 Burn Ground Unit (Figures H-1 and H-2) is managed by Los Alamos National Laboratory's (LANL's) Engineering Science and Applications (ESA)-Weapon Materials and Manufacturing Group, which is responsible for the safe treatment, storage, and handling of high-explosives (HE)-contaminated waste material generated by the HE production facilities.

H.1 TA-16 BURN GROUND UNIT STRUCTURES

TA-16 is located in the southwestern quadrant of LANL at the west end of the Pajarito Plateau, near the foothills of the Jemez Mountains (see Figure A-1 in Attachment A). The TA-16 Burn Ground Unit is comprised of several OB structures, which are described below.

H.1.1 TA-16-388 Flash Pad/Burn Tray

In 1998, the New Mexico Environment Department (NMED) granted LANL Temporary Authorization to upgrade the TA-16-388 HE Burn Tray to a propane-fueled flash pad and burn tray (Figure H-3). The upgrade began shortly thereafter. The new designation for TA-16-388

was reflected in the "Los Alamos National Laboratory General Part A Permit Application," Revision 0.0 (LANL, 1998a), submitted to the NMED in April 1998 and hereinafter referred to as the LANL General Part A. The TA-16-388 conversion was subsequently approved by the NMED on May 12, 1999, as a Change During Interim Status, pursuant to 20 NMAC 4.1, Subpart IX, 270.72 [6-14-00].

H.1.1.1 TA-16-388 Flash Pad

The TA-16-388 Flash Pad consists of a 22-foot (ft) by 22-ft concrete pad set on a secondary containment area. The base of the flash pad is 12 inches thick. The entire flash pad is contained in a 45-mil Hypalon liner, which is 6 inches below the bottom of the pad and curved up to ground level on all 4 sides, extending out 2 ft from the pad perimeter. Inset one ft from the edge of the concrete pad along the two sides and back is a 3-ft-high, 8-inch-thick, integrally poured, concrete wall. The pad is slanted down toward the back concrete wall, thus providing secondary containment for any spills or run-on/runoff of stormwater. These are collected in the rear of the pad where they either evaporate or can be collected by one of the Burn Ground HE wastewater tank trucks. Between burns, the structure can be covered with a retractable steel roof, tarps, or other types of covers, unless ash sampling, ash removal, or waste staging requires that the cover be retracted. When waste is being staged or if burning is delayed, the retractable roof, tarps, or other types of covers may be used to cover the waste and prevent it from becoming wind-blown. The configuration of the flash pad and burners is shown in Figure H-4. The maximum treatment capacity of the flash pad is estimated at 40,000 pounds per burn to accommodate the weights of large machine tools and other equipment. However, large burns are conducted only when absolutely necessary because it is more difficult to assure the HE is destroyed on all materials treated. Instead, burns of several hundred pounds are usually conducted.

The heat sources for the flash pad consist of three 5-ft-long forced-air propane burners with adjustable mounts. A burner is mounted outside the wall on each side and the back of the pad. One to three burners can be used, depending on the amount and configuration of the material to be flashed. The total capacity of the propane supply system is approximately 7 million British thermal units per hour (BTU/hr). Therefore, the output of each burner will dependent on how many are used for a burn. Usually, they are operated at approximate million BTU/hr. This provides adequate heat to bring the material being flashed to a

temperature sufficient to destroy all HE contamination, typically to a temperature above 400 degrees centigrade (°C) (see Section H.2.1).

Television cameras mounted above the front of the TA-16-388 structure monitor operations at the flash pad, and Burn Ground personnel observe the flash operations on the monitor in the Control Building (TA-16-389). Lockout keys for the power that operates the flash pad are also located in the Control Building. The lockout keys are removed and carried by personnel working at the flash pad. Once the flash pad has been set up for a treatment and has been barricaded to prevent traffic from approaching the pad, personnel return to the Control Building and monitor the burners using a computer display.

Movable steel equipment is used on the TA-16-388 Flash Pad to stage the many types of HE-contaminated waste to be treated at the pad. This equipment is constructed to be moved with a forklift and will be stored within the TA-16 Burn Ground Unit. One type of waste treated is large, metallic equipment that has been used for HE machining, handling, transportation, and storage. Several steel pallets are positioned in the middle of the flash pad and the equipment to be treated is set on the steel pallets. The pallets protect the integrity of the concrete pad, preventing deterioration caused by the heat and by mechanical impacts. Thermocouples are placed on and within the equipment being flashed to measure temperatures to document that the materials reached and maintained the required temperature levels for the necessary time (see Section H.2.1).

Much of the noncombustible waste consists of smaller metal items that can be moved by hand. These items are treated in a steel tray, which is lined on the bottom with sand and on the sides with firebrick. The smaller metallic items are positioned in this tray for treatment. After cooling, the items can be reoriented for additional treatment. Thermocouples can be used to verify that the required temperatures have been reached (see Section H.2.1).

Steel trays are also used in treating combustible solids. Cardboard HE storage containers, cloth and paper used to clean HE, packing material for HE, wooden HE packing crates, and rags used to absorb oil from around HE-processing machines are some of the common combustible materials that must be treated. These materials are stacked on the steel tray and covered with a steel screen. The burners are used to thoroughly ignite the material and are

then turned off. Before removing the residues (if any), the material is inspected for thorough combustion and burned again, if necessary.

A steel tray, combined with a smaller steel tray, is used to destroy HE contamination in small batches of water-solvent solutions, acids, bases, or oils. These wastes are usually received in small polyethylene jars packed in a secondary container. These liquids are placed in the smaller tray and the propane-fired burners are used to ignite combustible gases and heat HE to the temperatures necessary for its destruction (see Section H.2.1).

Soil contaminated with explosives, residues from the TA-16-399 HE Burn Tray and the TA-16-401 and 406 Sand Filters that require further treatment, and similar contaminated noncombustible particulate matter are also treated at the flash pad. These waste types are placed in a tray that is set on an open frame and covered with a steel plate. This assembly is set in the middle of another tray. Thermocouples are set in the middle of the particulate matter to monitor the temperature (see Section H.2.1).

In addition to the steel pallets and steel trays already described, several other movable steel devices are being considered for use on the flash pad to optimize burning and/or prevent waste compaction. The first device is a cage of expanded steel screen to better contain combustibles during burning. The second device is an apparatus for treating the noncombustible particulate material described above in a more efficient manner. For the second device, one method being considered is to trap the material between two narrowly separated steel plates and heat both plates until the desired temperature is reached. The treated material would then be released into a container and the apparatus would be refilled from a hopper. A second method is to continuously release the material from a hopper, through a flame, and into a container. A third device required may be steel stands on which HE-contaminated pipes are supported. As waste types change, other devices may be needed to effectively treat the wastes.

H.1.1.2 TA-16-388 Burn Tray

The TA-16-388 Burn Tray (Figure H-5) is a stainless-steel kettle with a 75-gallon capacity. The kettle is 30 inches in diameter, is 24 inches high, and stands on legs. Beneath the kettle is a propane ring burner with a heat output of approximately 200,000 BTU/hr. The burner has a

steel windshield wrapped around it. Mounted on stands beside the kettle are two flare burners with a heat output of approximately 50,000 BTU/hr each. These burners ignite combustible gases boiled off by the ring burner. The entire assembly sits in a steel secondary containment tank, which is 8 ft in diameter, 1 ft high, and has a 375-gallon capacity. The center of the assembly sits 10 ft back from the front of a 20-ft-wide, 40-ft-long concrete pad. A retractable cover on the pad can be rolled over the burn tray assembly between burns, or the assembly can be covered with a tarp or other type of cover.

The wastes treated at the TA-16-388 Burn Tray range from HE-contaminated solvents, solvent/water mixtures, acids, and bases resulting from HE analysis, processing, maintenance, and cleanup activities. Oils are usually no longer burned in the TA-16-388 Burn Tray because the heating value supplied by the burners is too low to prevent soot formation for most oils. Instead, oils are usually burned in a small steel tray on the TA-16-388 Flash Pad, where the heating value supplied by the propane burners is much higher. The liquids are either poured into the kettle from 5-gallon carboys or hand-pumped from 55-gallon or other drums. Burn Ground personnel observe the burn tray operations via television monitor. After the liquid contents are consumed, the residue in the kettle (if any) is heated to decomposition temperatures for explosives. This is determined by thermocouples and monitored in the Control Building (see Section H.2.1). Although the maximum treatment capacity of the burn tray is listed in the LANL General Part A as 100 gallons and the kettle capacity is 75 gallons, usually only about 5 to 30 gallons of liquid waste are treated in any batch. This quantity represents the amount that can be effectively treated in a single day.

Face shields or other suitable eye protection are worn while liquid is discharged and during cleanup operations when airborne particles constitute an eye hazard. Respirators may be worn when highly hazardous volatile solvents are being handled.

H.1.2 TA-16-399 HE Burn Tray

The TA-16-399 HE Burn Tray is a 4-ft-wide, 16-ft-long steel tray, supported on 1.5-ft-high legs, and lined with firebricks (Figure H-6). The treatment capacity of the TA-16-399 HE Burn Tray is 1,000 pounds of waste per burn. Explosives to be burned, usually rejects from pressing and machining operations and also HE pieces that are no longer useful, are transported to the HE burn tray packed in cardboard and wooden boxes. Padding is placed on the tray and the

explosives are removed from the boxes and set on the padding. The padding is then dampened with kerosene, electric matches (squibs) are connected to the firing cables, and a train of excelsior saturated with kerosene is run from the squibs to the padding. All personnel then go to the Control Building and the squibs are fired remotely. The burn is observed by Burn Ground personnel located in the Control Building, using a television camera located near the TA-16-388 structure and a monitor and a periscope located in the Control Building. The ash is later inspected for unburned HE or other residues that do not appear to be fully treated. The cover of the TA-16-399 HE Burn Tray is placed over the residue until it can either be treated again on the burn tray or on the TA-16-388 Flash Pad.

Between burns, the TA-16-399 HE Burn Tray is covered, unless an ash sample is being collected, ash is being removed, or waste is being staged. The portable cover or a tarp is used to cover the structure.

H.1.3 TA-16-401 and TA-16-406 Sand Filters

The TA-16-401 and TA-16-406 Sand Filters are 8 ft, 9 inches in diameter and about 4 ft high, about half of which is below ground level (Figure H-7). The base of each has a shallow funnel-shape that is connected to underground pipes leading to the HE Wastewater Treatment Facility's sump tank. The sand filters consist of a gradation of large, smooth river rocks at the bottom to coarse and fine sand on the top. The sand filters remove inert and explosive solids that are settled from or are suspended in wastewater. The flow rate through the sand filters is usually only several gallons per minute and it generally takes a day to unload a full tank truck.

Two types of wastes are treated at the sand filters. The first is wastewater in which HE, and possibly trace chemicals associated with HE synthesis and degradation, are in solution. The second is particulate HE saturated with water. Currently, each type of waste is treated in a different filter, the first in the TA-16-406 Sand Filter and the second in TA-16-401 Sand Filter. However, this practice can vary over time and either sand filter can be used for wastewater and/or bulk and particulate HE. The maximum treatment capacity of each sand filter is 1,000 pounds of HE per burn.

The wastewater to be treated comes from holding tanks (sumps) of HE-processing facilities and various types of tanks from environmental restoration and decontamination operations of

HE-contaminated solid waste management units. Usually, the wastewater is pumped from the holding tanks into tank trucks operated by Burn Ground personnel, and poured into the TA-16-406 Sand Filter at a rate of several gallons per minute. However, there may be some instances where wastewater is placed in a holding tank near the sand filter and then pumped or gravity fed directly into the filter. Filter socks are tied to the outlet hoses to capture coarse particulate HE. If the water is oily, several pounds of activated charcoal may be added to the filter socks to adsorb oils. Once the filter sock is filled with inert and explosive particles, it is drained and placed on the TA-16-401 Sand Filter. Eventually, the top of the TA-16-406 Sand Filter becomes clogged with fine particles. This fine top layer of sediment is removed and placed in the TA-16-401 Sand Filter. Clean sand is then placed on the surface of the TA-16-406 Sand Filter.

Water-saturated explosives are placed in the TA-16-401 Sand Filter. These water-saturated HE wastes come from several sources. The first source is the HE-production facilities or environmental restoration activities where HE-containing wastewater is pre-filtered. When the pre-filters are full, the contents or the entire filter are put into plastic buckets, which are placed in less-than-90-day storage areas or satellite accumulation areas. Before treatment, the buckets are moved from the storage or accumulation sites to the TA-16-401 Sand Filter, where their contents are spread out on the sand filter surface. Similarly handled is the HE that is collected during environmental restoration or building decontamination/decomissioning activities. It is placed into buckets with water and stored in accumulation areas until treated by OB. Another source of wet HE is the HE sludge at the bottom of the various holding tanks or sumps. After the wastewater is removed for treatment, the sludge remaining in the sumps is periodically vacuumed into tank trucks and poured into the TA-16-401 Sand Filter. Because the operations and capacities of the sand filters are similar to those of the TA-16-399 HE Burn Tray, the sand filters can be used to treat bulk HE if the TA-16-399 HE Burn Tray is not operational. There may be other sources of HE generated in the future that will be treated at the sand filters.

After the HE has been placed in a sand filter, a heavy steel lid is then placed over the filter to restrict access to the wastes and shield them from initiating sources. When a sufficient amount of HE waste has been accumulated in the TA-16-401 Sand Filter, the steel lid is tightly sealed to the sand filter tank using screw clamps. The contents of the sand filter are then

dried with heated forced air for 4 or 5 days. The dried contents are then damped with kerosene and ignited remotely using the same procedure as used at the TA-16-399 HE Burn Tray. The burn is observed remotely by Burn Ground personnel using television cameras located near the sand filters, and a monitor and a periscope located in the Control Building. The TA-16-401 Sand Filter is used principally for burning because it is not as close to trees as the TA-16-406 Sand Filter and the area around the TA-16-401 Sand Filter is easily kept mowed.

H.2 OPERATIONAL AND WASTE MANAGEMENT PRACTICES

The TA-16 Burn Ground Unit treats only hazardous solid and liquid wastes that are either pure HE or contaminated with HE. This section describes the operational and waste management practices used to stage and treat the waste, as well as the disposition of residues. Information on treatment effectiveness; ignitable, reactive, and incompatible wastes; security and access; preparedness and prevention; and volatile organic air emissions standards are also presented herein. The waste streams treated at the unit are described in Table B-6 of Appendix B in the "Los Alamos National Laboratory General Part B Permit Application," Revision 1.0 (LANL, 1998b), hereinafter referred to as the LANL General Part B.

H.2.1 General Burning Procedures

Treatment of hazardous waste at the TA-16 Burn Ground Unit is conducted using a non-continuous [batch] thermal treatment process, in accordance with the requirements specified in 20 NMAC 4.1, Subpart VI, 265.373 [6-14-00]. Open burning of wastes at the TA-16 Burn Ground Unit are conducted in a manner that does not threaten human health or the environment. Prior to OB operations at the TA-16 Burn Ground Unit, the area is cleared of all but authorized Burn Ground personnel. A barrier is placed across the road to prevent entry.

The closest property not owned by LANL is at a distance greater than one mile from the TA-16 Burn Ground Unit. Therefore, a safe distance is maintained between the HE burn sites and the property of others, as required in 20 NMAC 4.1, Subpart VI, 265.382 [6-14-00].

The master controls for each of the TA-16 Burn Ground Unit structures' firing circuits are located inside the Control Building. The Control Building is no less than 300 ft from all OB operations. Operational procedures require that OB not be undertaken at a time of impending electrical storms and during high wind conditions. OB may also be restricted during periods of

high fire danger and adverse atmospheric conditions. The NMED's Air Quality Bureau determines the conditions under which OB can occur. The following atmospheric limitations are those that LANL currently operates under:

- If mean wind speed is projected to be ≥5 meters per second, a LANL meteorologist must be consulted and determine that high wind speeds are not projected later in the day;
- Burns must be postponed if wind speeds exceed 10 meters per second;
- Burns can occur only when atmospheric stability is A, B, C, or D (conditions under which mixing is quite rapid and concentrations fall off quickly with distance from the source);
- Mixing depth must be greater than 200 meters; and
- Burns must be conducted between 10 AM and 4 PM, the time of day when dispersion is optimal.

However, these limitations could change at the discretion of NMED's Air Quality Bureau.

All OB operations are conducted in accordance with appropriate LANL standard operating procedures (SOP). Adherence to the SOPs ensures safe and efficient HE destruction and decontamination of flashed materials. Although it is highly unlikely, all of the TA-16 Burn Ground Unit structures could be operated in one day.

A minimum temperature of 400 °C has been determined as the temperature needed to thermally degrade the types of HE-contaminated wastes generated at LANL and treated at the TA-16 Burn Ground Unit. For incombustible solid HE-contaminated wastes, thermocouples are placed on the wastes to be treated and temperatures are monitored to ensure that the required temperatures are met. The necessary treatment time varies with the waste types being treated. The waste has been treated when all the thermocouples stabilize at the minimum temperature, indicating that the waste is heated throughout. For liquids, heat is applied until the liquids are consumed. Any residue remaining is heated to a minimum of 400 °C, as indicated by thermocouples. In the unlikely event that complete destruction of HE cannot be achieved, any incompletely treated wastes would be treated again.

H.2.2 Waste Staging

Waste staging varies by treatment process. The factors influencing how wastes are staged are safety, the degree of difficulty in placing or removing wastes from a TA-16 Burn Ground Unit structure, and the influence of weather conditions. The staging procedures by structure are described below.

Bulk HE treated at the TA-16-399 HE Burn Tray is initially accumulated in less-than-90-day storage areas and satellite accumulation areas until the day of treatment. Safety concerns dictate that HE be immediately burned after arriving at the Burn Ground. If it cannot be burned immediately, the HE is staged temporarily in a rest house or magazine.

Because the amount of liquid waste treated at the TA-16-388 Burn Tray is small and staging of this waste does not involve complicated collection and transport procedures, the waste to be treated is transported from less-than-90-day storage areas and satellite accumulation areas just before a planned burn. It is usually possible to ensure that the environmental conditions (e.g., wind speed, fire conditions) required by the NMED Air Quality Bureau can be met before the waste is staged. In the event of an unforeseen delay, the waste is covered until it can be burned.

The most difficult waste to stage is that treated at the TA-16-388 Flash Pad. The wastes are accumulated in less-than-90-day storage areas and satellite accumulation areas until several days before flashing. Depending on the size and amount of waste to be flashed, it may take several days to stage the waste on the structure. The waste material to be treated may include relatively large quantities that involve extensive scheduling of collection and transport resources, may require equipment such as cranes or additional procedures for lifting of large pieces, and require complicated stacking arrangements on removable steel supports. Because the staging of this material is complex, it may not always be possible to ensure that the meteorological conditions required for good dispersion will exist at the scheduled burn time. If burning is delayed, a cover is placed over the waste.

The TA-16-401 and TA-16-406 Sand Filters are used to treat HE-contaminated wastewater and the HE filtrate accumulates over a number of days. Wet bulk and particulate HE is transported to the sand filters from less-than-90-day storage areas and satellite accumulation areas just before the filters are covered for drying. Several days prior to burning, the filters are

sealed and the forced-air heater is activated to dry the HE. The HE is burned as soon as environmental conditions allow.

H.2.3 Waste Management Practices [20 NMAC 4.1, Subpart V, Part 264, Subpart X]

The wastes treated are both homogeneous (e.g., solid explosives, scrap explosives) and heterogeneous (e.g., excess equipment, remediation debris). The waste streams are described in Appendix B of the LANL General Part B. The wastes are treated to remove the characteristic of reactivity, although other characteristic and listed hazardous waste may be present in the wastes being treated. Whereas burning will treat a number of waste constituents (e.g., HE, solvents), metals (if present) will not be destroyed. They will remain in the residues, which are characterized by acceptable knowledge or are sampled and analyzed for appropriate Toxicity Characteristic Leaching Procedure metals and other metallic underlying constituents, as needed. If hazardous, the residues are sent to an appropriate permitted facility for treatment/disposal. HE-contaminated wastes may be treated at the TA-16 Burn Ground Unit to desensitize or declassify the waste. Components of the TA-16 Burn Ground Unit structures (e.g., burn trays, steel plates) consist of nonhazardous materials only (e.g., steel).

Waste containers for small pieces of explosives-contaminated waste and explosive material generally consist of plastic bags, 55-gallon drums, 30-gallon carboys, or paper-lined cardboard boxes. The waste will be placed within a container, sealed, and labeled appropriately. These waste containers will then be stored in a less-than-90-day storage area or a satellite accumulation area. Pieces of waste that cannot fit into boxes or drums (e.g., large equipment and debris) are stored in movable storage bins, such as covered roll-off bins. These bins are designated as less-than-90-day accumulation areas. They can be transported directly to the TA-16 Burn Ground Unit for staging and subsequent treatment of the waste.

Waste to be treated is collected from various less-than-90-day storage areas and satellite accumulation areas at the facility. When loading waste, the cargo compartment of the transport vehicle(s) is checked to ensure that it is clean and contains no loose items such as tools or pieces of metal. For transport, the wastes are placed in an enclosed compartment or secured with tie-downs. The load limit for transporting explosives is determined by the capacity of the transport vehicle(s). Wastes are transported by appropriately trained personnel in a designated vehicle(s) to the TA-16 Burn Ground. The waste is unloaded from the

vehicle(s) and placed at the TA-16 Burn Ground Unit structure by qualified technicians/specialists. A visual examination is conducted after unloading to ensure that no explosive material remains in the transport vehicle(s).

Wetting of an area around a TA-16 Burn Ground Unit structure prior to use is done only when vegetation is dry enough to create a potential fire danger. A garden hose is used and only the ground surface is wetted. The amount of water is not sufficient to cause ponding, erosion, or act as a driving force for dispersing legacy contamination from past uses of the area.

For safety reasons, the U.S. Department of Energy (DOE) Explosives Safety Manual (DOE M 440.1-1) requires that no entry should be allowed into the treatment area until 8 hours have elapsed, unless it can be determined through visual observation that all explosives have been destroyed. The manual also requires that no ash be collected or removed for 24 hours following a burn. In accordance with this requirement, ash is usually removed, drummed, and sampled (if necessary) immediately after the 24-hour period, unless a visual inspection and/or HE spot test indicates that the waste must be treated again, or if the ash is heterogeneous and requires special sampling. In the first case, the waste is left on the structure, covered, and treated again as soon as weather conditions allow. In the second case, the ash is covered until a sampler can be scheduled to conduct proper sampling (typically in a day or two); as soon as samples are collected, the ash is drummed. Drums containing the ash are stored in a less-than-90-day storage area. The ash is then sent off site for disposal or for further treatment, based on the analytical results and on the original U.S. Environmental Protection Agency (EPA) Hazardous Waste Numbers assigned to the waste before treatment. Scrap metal that can be certified as free of HE is sent off site for recycling. Other residues are disposed as New Mexico Special Waste in accordance with 20 NMAC 9.1 in a landfill licensed to accept these wastes.

LANL minimizes the impact to the environment by conducting treatment operations in a strictly controlled, remote area within the LANL boundaries. Treatment operations are not conducted during adverse conditions to minimize wind dispersal of ash and particulate matter to the environment. Wind dispersal of ash is minimized by prohibiting burns during periods of high winds, removing ash as soon as practicable, and for waste types likely to generate ash (e.g.,

cardboard boxes, wipes), covering the waste with a screen prior to burning. Ash production has also been minimized through the use of propane burners instead of wood as fuel.

H.2.4 Treatment Effectiveness [20 NMAC 4.1, Subpart IX, 270.23(d)]

To address the applicable miscellaneous unit requirement specified in 20 NMAC 4.1, Subpart IX, 270.23(d) [6-14-00], a demonstration of treatment effectiveness must be included for the TA-16 Burn Ground Unit. As indicated in the U.S. Army Environmental Hygiene Agency (AEHA) guidance document titled "RCRA Part B Permit Writer's Guidance Manual for Department of Defense Open Burning/Open Detonation Units" (AEHA, 1987), a demonstration of treatment effectiveness can be based on laboratory or field data. For wastes treated by OB, information demonstrating that any residues remaining after burning are not reactive (i.e., as defined by the Resource Conservation and Recovery Act [RCRA]) should be provided. At the TA-16 Burn Ground Unit structures, this is accomplished by testing the residue for HE. If HE is present in the residue, it is treated again.

H.2.5 Ignitable, Reactive, and Incompatible Wastes [20 NMAC 4.1, Subpart V, 264.17(a)]

Applicable requirements for the management of ignitable, reactive, and incompatible wastes at the TA-16 Burn Ground Unit are addressed in Section 2.2.5 of this permit renewal document. This information is provided to meet the requirements of 20 NMAC 4.1, Subpart IX, 270.14(b)(9), and 20 NMAC 4.1, Subpart V, 264.17(a) and (b) [6-14-00].

H.2.6 Security and Access [20 NMAC 4.1, Subpart IX, 270.14(b)(4) and 270.14(b)(19)(viii); 20 NMAC 4.1, Subpart V, 264.14]

The following describes the security features in place at the TA-16 Burn Ground Unit in accordance with the requirements of 20 NMAC 4.1, Subpart IX, 270.14(b)(4) and 270.14(b)(19)(viii), and 20 NMAC 4.1, Subpart V, 264.14 [6-14-00].

After clearing non-authorized personnel from the TA-16 Burn Ground Unit, a barrier is placed across the road before OB operations to reduce the possibility of entry into this area. In accordance with 20 NMAC 4.1, Subpart IX, 270.14(b)(19)(viii) [6-14-00], the locations of the security fence and access gates at TA-16 are shown on Figure A-11 of Attachment A. (The locations of fences and gates are subject to change.) Collectively, these security procedures and the security features discussed below prevent the unknowing entry and minimize the

possibility for unauthorized entry of persons into the unit, in accordance with the requirements of 20 NMAC 4.1, Subpart V, 264.14(b)(2) [6-14-00].

The TA-16 Burn Ground Unit is located within a secured area at which security is maintained through both administrative controls and physical barriers. Access to the area can only be gained through controlled entry stations by persons possessing appropriate security clearance and site-specific training. The access stations are controlled by Protection Technology Los Alamos (PTLA) security personnel or by badge and palm readers 24 hours a day. In addition, entry into the Burn Ground is through an industrial fence with access granted through an ESA-controlled station. PTLA security personnel inspect security fences on a regular basis, and repairs are made as necessary. Warning signs are posted near the entrance to the unit area and can be seen by personnel approaching the area. The legends on the signs indicate "Danger Authorized Personnel Only" or "Danger Unauthorized Personnel Keep Out." Warning signs are legible from a distance of 25 ft and are written in English and Spanish.

H.2.7 Preparedness and Prevention Requirements [20 NMAC 4.1, Subpart V, Part 264, Subpart C]

The following sections present how operations at the TA-16 Burn Ground Unit comply with the preparedness and prevention requirements of 20 NMAC 4.1, Subpart V, Part 264, Subpart C [6-14-00].

H.2.7.1 Required Equipment [20 NMAC 4.1, Subpart V, 264.32]

In accordance with the requirements of 20 NMAC 4.1, Subpart V, 264.32 [6-14-00], the TA-16 Burn Ground Unit is equipped with adequate emergency equipment, which includes internal and external communication equipment, alarm systems, fire extinguishers, and fire control and decontamination equipment. Emergency equipment specific to the unit is discussed in the following sections and is summarized in Table E-2 in Attachment E of this permit renewal document. LANL-wide emergency equipment available for use at any of the LANL waste management units is presented in Appendix E of the LANL General Part B.

H.2.7.2 Testing and Maintenance of Equipment [20 NMAC 4.1, Subpart V, 264.33]

Communications and alarm systems and fire protection and decontamination equipment associated with the unit are tested and maintained according to the inspection schedule detailed in Appendix C of the LANL General Part B. The frequency of inspection is adequate

to assure proper operation in the event of an emergency. Repair and replacement of emergency equipment are performed, as needed.

H.2.7.3 Access to Communications or Alarm Systems [20 NMAC 4.1, Subpart V, 264.34]
Whenever treatment operations are being conducted at the unit, personnel have immediate access to an emergency communication device, either directly or through visual or voice contact with another individual. In the event of an emergency, two-way radios, pagers, and/or telephones allow personnel to contact the operating group management, the Emergency Management and Response Office, and/or the Central Alarm Station operator (refer to Appendix E of the LANL General Part B).

H.2.7.4 Space Requirements [20 NMAC 4.1, Subpart V, 264.35]
Adequate space is maintained at the TA-16 Burn Ground Unit to allow the unobstructed movement of personnel and fire protection, spill control, and decontamination equipment in the event of an emergency.

H.2.7.5 Support Agreements with Outside Agencies [20 NMAC 4.1, Subpart V, 264.37]
Information on support agreements with outside agencies, as required by 20 NMAC 4.1, Subpart V, 264.37 [6-14-00], is presented in Section 2.0 of the LANL General Part B.

H.2.7.6 Preventive Procedures, Structures, and Equipment [20 NMAC 4.1, Subpart IX, 270.14(b)(8)]
Descriptions of the preventive procedures, structures, and equipment at the unit are presented below. This information is provided in accordance with the requirements of 20 NMAC 4.1, Subpart IX, 270.14(b)(8) [6-14-00]. Adherence to the procedures and proper use of the structures and equipment will help to prevent hazards, prevent undue exposure of personnel to hazardous waste, and prevent releases to the environment.

At the TA-16 Burn Ground Unit, large pieces of explosives-contaminated waste or explosive materials are typically handled using mechanical equipment such as a truck-mounted crane or a hydraulic lift gate. Small containers of waste are handled manually or with a dolly. The use of proper handling equipment, appropriate to the size and weight of the waste item, helps to prevent hazards while moving waste at the unit. Additionally, personnel involved in waste handling and container handling operations at the unit are knowledgeable about the physical

and chemical properties of the waste managed at the site and take additional precautions, as necessary, to ensure that wastes are handled safely.

Pursuant to the requirements of 20 NMAC 4.1, Subpart IX, 270.14(b)(19)(xi) [6-14-00], Figure A-8 in Attachment A shows surface contours and drainage around the unit. Engineering controls are in place to prevent runoff of wastes from the unit to other areas of the facility or to the environment (see Figure A-13 in Attachment A).

It is not anticipated that there will be any impact to groundwater or other water supplies as a result of treatment operations at the unit because engineering and operational controls ensure that run-on and runoff are minimized. The TA-16-388 Flash Pad and Burn Tray are equipped with retractable covers and secondary containment to prevent run-on and runoff. The TA-16-399 HE Burn Tray is equipped with a movable cover to prevent run-on into this structure. Tarps or other types of covers may also be used at the TA-16-388 Flash Pad/Burn Tray and the TA-16-399 HE Burn Tray. The TA-16-401 and TA-16-406 Sand Filters are both equipped with lids and are connected to the HE Wastewater Treatment Facility.

Electrical power is supplied to the Control Building. Supplied power at this building operates lighting, telephone, alarm, and monitoring systems. Operations at the unit would be discontinued temporarily if electrical power was not restored quickly.

Safety shoes, safety glasses, and other personal protective equipment (PPE) required in explosives areas are worn by workers during routine operations at the unit. Additional appropriate PPE is available should abnormal or unusual conditions require such equipment.

Releases to the atmosphere resulting from treatment activities at the unit cannot be prevented. However, impacts are kept to a minimum through operating practices and burning under appropriate atmospheric conditions. Air releases from OB operations are regulated by the NMED's Air Quality Bureau under 20 NMAC 2.60. The regulation of air impacts is discussed further in Section H.3.4.

H.2.7.7 Prevention of Accidental Ignition or Reaction of Ignitable, Reactive, or Incompatible Waste [20 NMAC 4.1, Subpart IX, 270.14(b)(9), 270.15(c) and (d) and 20 NMAC 4.1, Subpart V, 264.17]

This section details the precautions taken to prevent accidental ignition or reaction of ignitable, reactive, or incompatible wastes at the TA-16 Burn Ground Unit.

Ignitable or reactive wastes are located at least 50 feet from the facility's property line at all times and are protected from sources of ignition or reaction. Smoking is not permitted in areas where wastes are managed. Signs indicating "No Smoking" are conspicuously placed near the entrance to the unit, as required by 20 NMAC 4.1, Subpart V, 264.17(a) [6-14-00]. Together, these measures meet the requirements of 20 NMAC 4.1, Subpart V, 264.17(a) and (b) and 264.176 [6-14-00].

Incompatible wastes, if managed at the unit, are segregated to prevent adverse reactions from occurring through commingling of the wastes. In addition, no incompatible wastes will be mixed, and no waste will be placed in a container that previously held an incompatible waste, as required by 20 NMAC 4.1, Subpart V, 264.177(a) and (b), and 20 NMAC 4.1, Subpart IX, 270.15(d) [6-14-00]. If incompatible wastes are managed at the unit, the requirements of 20 NMAC 4.1, Subpart V, 264.177(c) [6-14-00], will also be met. Only containers made of or lined with materials that will not react with and are otherwise compatible with the waste to be managed will be used at the unit.

H.2.8 Volatile Organic Air Emission Standards [20 NMAC 4.1, Subpart V, Part 264, Subpart CC]

The TA-16 Burn Ground Unit is a Subpart X unit; there are no Subpart J tanks or Subpart K surface impoundments at TA-16. The hazardous wastes accepted in containers at the TA-16 Burn Ground Unit may be subject to 20 NMAC 4.1, Subpart V, Part 264, Subpart CC [6-14-00], "Air Emission Standards for Tanks, Surface Impoundments, and Containers," based on the applicability criteria specified in 20 NMAC 4.1, Subpart V, 264.1080 [6-14-00]. Subpart CC standards for containers require that containers of hazardous waste be covered so there are no detectable emissions. LANL requires that Subpart CC requirements for container management be met by the generator. There are no Subpart CC-regulated liquids generated during OB operations.

H.3 ENVIRONMENTAL PERFORMANCE STANDARDS [20 NMAC 4.1, Subpart V, 264.601]

The TA-16 Burn Ground Unit is located in a remote area of LANL. The unit will be operated, maintained, and closed in a manner that will ensure protection of human health and the environment, in accordance with 20 NMAC 4.1, Subpart V, 264.601 [6-14-00]. Land use patterns in the Los Alamos area are shown on Figure A-1 in Appendix A of the LANL General Part B. A discussion of the hydrogeology in the region of TA-16 is presented in Section H.3.1.

The TA-16 Burn Ground Unit has been designed to facilitate safe handling and treatment of wastes to prevent adverse human health and environmental impacts. Design information and waste management practices for this unit are detailed in Sections H.1 and H.2 of this attachment. The waste analysis plan for this unit is included as Appendix B of the LANL General Part B. A description of emergency response actions to be taken to minimize adverse impacts of unanticipated events are described in Attachment E of this document and Appendix E of the LANL General Part B.

H.3.1 Hydrogeology in the Region of TA-16

H.3.1.1 Geology

TA-16 is immediately underlain by the Pleistocene Bandelier Tuff, which outcrops in a few places on the mesatop and is exposed along canyon walls (LANL, 1999). During late 1998 and 1999, Characterization Well R-25 was drilled approximately 1,000 feet west of the TA-16 Burn Ground Unit. This borehole penetrated the Bandelier Tuff units and the underlying Puye Formation to a depth of 1,942 feet (LANL, 2000). Well R-25 was drilled through 384 feet of the Tshirege Member of the Bandelier Tuff (LANL, 1999). This member consists of densely-welded tuff with interbedded high permeability zones. The Cerro Toledo Formation underlies the Tshirege Member at the R-25 location, where it extends from a depth of 384 feet to 509 feet (LANL, 2000). This formation consists of unconsolidated sands and gravels similar to the Puye Formation (LANL, 1999). The Otowi Member of the Bandelier Tuff underlies the Cerro Toledo Formation at the R-25 location. This monotonous zone of non-welded tuff extends from 509 feet to 843 feet (LANL, 1999). At the base of the Otowi Member, the Puye Formation extends from 843 feet to the bottom of the borehole at a depth of 1,942 feet (LANL, 1999).

The TA-16 Burn Ground Unit is located on the mesatop, which is composed of Unit 4 of the Tshirege Member of the Bandelier Tuff (LANL, 1999). Mapping correlations and detailed core

descriptions suggest that mesatop portions of TA-16 are underlain by approximately 80 to 110 feet of Unit 4 (Rogers, 1995). This unit is lithologically complex, and in ascending order consists of a poorly indurated, white to light gray, nonwelded ignimbrite; an indurated, light tan, nonwelded cliff-forming tuff overlain by a broad bench; a varicolored, nonwelded cliff-forming tuff with a devitrified base and a 10-foot-thick glassy upper part; a crystal-rich surge bed up to 1 foot thick; and a hard, densely-welded tuff that forms the mesa's caprock (LANL, 1999). The crystal-rich surge bed may locally represent a perched zone, provided it overlies a low-permeability zone (LANL, 1999). Examination of this contact in the walls of Cañon de Valle and in cores suggest that the surge bed is discontinuous (LANL, 1999). Unit 3 of the Tshirege Member crops out on the mesatops at the east end of TA-16 and in the bottoms and walls of Cañon de Valle and Water Canyon. Adjacent to Material Disposal Area P, Unit 3 consists of two hard, pinkish-brown, partially- to moderately-welded cliff-forming ignimbrites separated by a soft, pinkish-orange, nonwelded slope-forming tuff. The uppermost subunit within Unit 3 contains significant horizontal fractures (LANL, 1999).

H.3.1.2 Structure

At least two faults with vertical offset may exist in the vicinity of TA-16 (LANL, 1999). The Frijoles segment of the Pajarito fault zone is located west of the western boundary of TA-16. This fault has had up to 400 feet of down-to-the-east displacement in the last 1.1 million years (Gardner and House, 1987). Beneath the TA-16 Burn Ground, the Water Canyon fault is inferred in the subsurface from interpretation of seismic lines (Dransfield and Gardner, 1985). However, it is unlikely that this fault breaks units of the Bandelier Tuff, and unpublished mapping south of TA-16 suggests that the fault does not break the surface south of Water Canyon along its projected trace (Hickmott, 1993). In the Los Alamos region, broad zones of intense fracturing superimposed on primary cooling joints are associated with major faults (Vaniman and Wohletz, 1990). Unlike cooling joints, these tectonic fractures are likely to cross flow units and may provide a deeply penetrating flow path for migration of liquids. Drilling in the area of the TA-16-260 outfall has revealed significant numbers of clay-lined fractures at a depth of greater than 70 feet beneath the surface of the mesatop (LANL, 1999). These clay-lined fractures appear to be concentrated in the lower portions of Unit 4 of the Tshirege Member, and represent a potential pathway for contaminant migration in the wetter areas of TA-16. A seismic investigation was conducted at TA-16 in 1999 and 2000, and a report on this investigation is anticipated to be published in late 2000.

H.3.1.3 Surficial Deposits

Surficial deposits at TA-16 consist of coarse-grained colluvium on steep hill slopes and along the bases of cliffs, finer-grained alluvial and colluvial sediments with a thin cover of eolian sediments on the flatter parts of mesa surfaces, and alluvial to colluvial fan deposits at the mouths of steeper drainages or on escarpments related to post-Bandelier faulting (LANL, 1999). Deposits in Cañon de Valle and Water Canyon consist of colluvial materials on and at the base of cliffs and canyon walls and fluvial sediments deposited by intermittent streams along the axes of the canyon floors (LANL, 1999).

A wide variety of soil types occur at TA-16 (Nyhan et al., 1978). These include both clayey-skeletal and fine Typic Eutroboralfs from 46 to over 122 centimeters (cm) thick, Tocal very fine sandy loam (28 to 36 cm thick), Frijoles very fine sandy loam (46 to more than 152 cm thick), Pogna fine sandy loam (13 to 30 cm thick), Totavi gravelly loam (0 to 152 cm thick), Sanjue-Arriba complex (46 to 153 cm thick), Typic Ustorthents (15 to 35 cm thick), and Carjo loam (51 to 102 cm thick) (Nyhan et al., 1978). According to Nyhan et al. (1978), soils at the TA-16 Burn Ground consist of Tocal very fine sandy loam, with low to moderate permeability and low water-holding capacity. Soils at TA-16, which are generally thicker in the western portions of the TA, grade into rock outcrops along the margins of the mesatops. In the soil zone previously described by Nyhan et al. (1978) as Tocal very fine sandy loam, nine soil profiles were recently characterized on the north and south slopes of Cañon de Valle near the TA-16 Burn Ground (McDonald et al., 1996). The recent work suggests that soil horizons range from 40 to 237 centimeters in depth, the soils are poorly developed, and they consist of A-R, A-Bw-R, or A-Bw-C soil profiles. The work also indicated that the soils are classified as Lithic Ustorthents, Typic Haplumbredt, Cumulic Haplumbredt, Typic Ustochrept, and Udic Paleoustalf (McDonald et al., 1996).

H.3.1.4 Groundwater

Groundwater elevation measurements suggest that groundwater flows from the Jemez Mountains east and southeast toward the Rio Grande, where a portion discharges into the river through seeps and springs. The hydraulic gradient of the regional aquifer averages about 60 to 80 feet per mile within the Puye Formation but increases to 80 to 100 feet per mile along the eastern edge of the Pajarito Plateau as the groundwater enters the less permeable sediments of the Santa Fe Group. In the upper section of the regional aquifer, the rate of

movement of groundwater varies, depending on the materials in the aquifer. Groundwater travel time between Characterization Well R-25 and a distance equal to that of the nearest water supply well, PM-2, is estimated to range from 50 to 200 years, based on the plateau-wide average groundwater flow rates of between 95 and 345 feet per year determined by Purtymun (1995). Although actual groundwater flow rates and flow direction in the vicinity of Well R-25 are not yet known, modeling efforts are ongoing to refine travel times to the supply wells.

The full range of recharge rates at TA-16 has probably not been identified. However, existing data clearly show that there is a wide range of rates in the mesas and canyons at TA-16. For example, chloride mass balance-based estimates suggest that rates are on the order of a only a few millimeters per year in some mesa locations (Newman, 1999). However, the presence of localized saturation and HE contamination below 100 ft in the mesas suggests that recharge rates may be relatively rapid in other locations (LANL, 1998d). In addition, the presence of HE below 700 ft in Characterization Well R-25 demonstrates that recharge to the 747-ft-deep intermediate perched aquifer can occur within a 50 year timeframe (Broxton et al., 1999).

There are three main factors which may control rapid recharge. The first factor is the existence of ponded water on the mesas (e.g., historical and current ditches and ponds) and the perennial reach of Cañon de Valle. These localized surface water areas create higher hydraulic heads and higher hydraulic conductivities in the subsurface. The second factor is that strongly welded tuff units occur on the western part of the Pajarito Plateau. These units have low matrix conductivities, but can have high fracture conductivities. Contaminant distributions and tracer studies support the importance of fracture pathways at TA-16 (LANL, 1998d). The third factor is the close proximity of TA-16 to the Pajarito Fault (LANL, 1998d). The fault is considered a possible significant recharge pathway to the regional aquifer and pathways related to faulting could extend into TA-16.

Based on drilling results in the R-25 well, located approximately 1,000 feet west of the TA-16 Burn Ground Unit, the depth to the regional aquifer at TA-16 is 1,286 feet (LANL, 2000). At the R-25 well, the intermediate perched aquifer was encountered at a depth of 747 feet, followed by an interval of alternating wet and dry conditions to a depth of 1,132 feet (LANL, 2000). Groundwater samples collected from R-25 at depths ranging from 747 to 1,942 feet

were found to contain HE compounds and their associated degradation products. The two contaminants of most concern are RDX and TNT because they exceeded EPA health advisory limits (2 micrograms per liter) for drinking water (LANL, 2000). Down-gradient drinking water-supply wells were also sampled but found to contain no HE; the closest drinking water-supply well to R-25 is three miles to the east (LANL, 1999). Discharges from past HE-manufacturing activities at TA-16 are believed to be the source of the constituents found in Well R-25.

At the TA-16 Burn Ground, 17 boreholes up to 200 feet deep were drilled in 1987 (Boreholes P-0 through P-16); tuff samples recovered during drilling operations were not saturated (LANL, 1988). In 1997, thirteen moderate-depth boreholes were drilled near the TA-16-260 outfall (Boreholes 16-2655 through 16-2667) and no perennial saturated zone was encountered (LANL, 1999). Moderate-depth boreholes drilled near Martin Spring and the 90s-Line Pond encountered saturated zones that dried up one month after drilling (LANL, 1999). In 1993, Well SHB-3 on the western side of TA-16 contained perched aquifer water at a depth of 664 feet. The R-25 well contained a thick perched zone that extended from a depth of 747 feet to 1,132 feet, and this zone is hypothesized to correlate with the saturated zone observed in SHB-3 (LANL, 1999).

Three perennial springs and two seeps have been identified within TA-16 (LANL, 1999). All three springs appear to discharge from near the Tshirege Member Unit 3/Unit 4 contact, and their presence suggests the existence of one or more shallow perched zones beneath TA-16.

H.3.1.5 Surface Water

Perennial and intermittent surface water exists at many locations at TA-16 due to both natural and anthropogenic sources (LANL, 1999). Surface water occurs primarily as ephemeral streams in the two major canyons adjacent to TA-16; however, perennial water flow does occur in a reach of Cañon de Valle due to spring and seep discharge (LANL, 1993). This reach begins near the TA-16-260 outfall. Its length varies seasonally and depending on discharges, and extends up to approximately 7,000 feet downstream. An extensive near-surface alluvial system is present in Cañon de Valle (LANL, 1999). During the fall of 1997, six alluvial wells were drilled at five locations at TA-16 (LANL, 1999). Four of these well locations were in Cañon de Valle; the remaining well location was in the steam plant drainage area. Depths to

tuff ranged from 4 to 6 feet, and all five locations contained saturated intervals at depths starting from 1 to 3 feet (LANL, 1999). These wells are sampled quarterly.

H.3.1.6 Hydrologic Conceptual Model

In the wetter areas of TA-16 (i.e., the TA-16-260 outfall), surface water run-off and infiltration into soil are hypothesized to be the most important hydrologic transport pathways (LANL, 1999). Run-off can mobilize contaminants and transport them off-site or concentrate dispersed surficial contaminants through solution and reprecipitation or sorption processes (LANL, 1999). The principal contaminants at TA-16 are HE and barium; both are moderately to strongly soluble and may be transported in surface water (LANL, 1999). It is now recognized that the perennial, contaminated reach of Cañon de Valle downgradient from the TA-16-260 outfall is mobilizing contaminants downgradient (LANL, 1999). Surface water run-off from TA-16 either flows from ephemeral streams on the mesatops into Cañon de Valle and Water Canyon and ultimately into the Rio Grande, or infiltrates downgradient and recharges perched aquifers in the region (LANL, 1999). Most of the contaminants observed in TA-16 surface waters are attributed to the TA-16-260 outfall (LANL, 1999).

Fluid transport via perched alluvial aquifers to springs and seeps is an important mechanism for contaminant transport at TA-16 (LANL, 1999). Infiltration into the subsurface may occur by porous flow into the soil, alluvium and bedrock, and by flow through fractures that intersect bedrock surfaces. Water may accumulate within units of the Bandelier Tuff, especially in units overlying more densely welded units, retarding downward transport. Water may also move laterally within the tuff in response to gradients on the welded horizons until it is able to move downward through the tuff or along fractures. More heavily welded units of the tuff may fracture more readily than intervening porous units, thus promoting transport of contaminants through the tuff.

H.3.2 Protection of Groundwater/Vadose Zone [20 NMAC 4.1, Subpart V, 264.601(a)]

The TA-16 Burn Ground Unit is located in a semiarid, temperate, mountain climate. In 1999, total precipitation in Los Alamos at the TA-6 station was 16.31 inches, and the average precipitation for the period from 1961 through 1990 was 18.73 inches (TA-6 is located approximately 3,500 feet north of TA-16). In the vicinity of the TA-16 Burn Ground Unit, the regional aquifer is at a depth of 1,286 feet, and the extensive uppermost intermediate perched aquifer is at a depth of 747 feet. Small-scale shallow perched zones, which discharge at the

springs, are located at approximate depths of 80 to 110 feet at the Tshirege Member Unit 3/Unit 4 contact. Collectively, the depth to the regional aquifer and the low annual precipitation significantly limit the potential for contaminants resulting from the TA-16 Burn Ground Unit operations to migrate through the vadose zone to the regional aquifer, which is the only aquifer in Los Alamos known to be capable of supplying municipal and industrial water users. No drinking water supply wells are located within the boundary of TA-16 or within 3,500 ft of the TA-16 Burn Ground Unit.

In an August 17, 1995, letter from the NMED to the DOE Los Alamos Area Office (see Supplement H-1), the NMED stated that LANL should prepare a plan to address the requirements of RCRA and the Hazardous and Solid Waste Amendments of 1984 (HSWA), as detailed in regulations and LANL's Hazardous Waste Facility Permit. As set forth in the approved workplan, the objectives of the described activities are to provide sufficient information to, in part, "establish detection monitoring programs pursuant to 40 CFR 264.91-100 for regulated units or to demonstrate that groundwater monitoring requirements could be waived, or to provide appropriate groundwater monitoring as part of corrective actions pursuant to 40 CFR 264.101 for Solid Waste Management Units that have been determined to have had a release that is a threat to human health or the environment..." (LANL, 1998c, p. ES-1). As such, the workplan is intended to characterize the hydrogeology of the facility and provide potential monitoring capabilities, should they be deemed necessary and appropriate. Efforts have been taken to design and construct the program wells in a manner consistent with RCRA performance standards, with the participation of NMED representatives to the Groundwater Integration Team. In addition, the workplan activities enable LANL to obtain the hydrogeologic characterization that will be used to form the basis for any monitoring program potentially implemented for regulated units or to support a groundwater monitoring waiver demonstration under 20 NMAC 4.1, Subpart F. The most recent HWP (LANL, 1998c) was prepared and submitted to the NMED in December 1996, and was approved in March 1998. Characterization Well R-25, located 1,000 feet west of the Burn Ground Unit, was drilled in 1998 and 1999 as part of the HWP. A comprehensive report on Well R-25 will be published and submitted to the NMED as part of the HWP agreement.

H.3.3 Protection of Surface Water/Wetlands and the Soil Surface [20 NMAC 4.1, Subpart V, 264.601(b)]

As stated previously, net annual precipitation for the Los Alamos area, including the site of the TA-16 Burn Ground Unit, is low. Perennial and intermittent surface waters exist at many locations at TA-16 due to both natural and anthropogenic sources. The locations of these surface waters, including intermittent streams, are shown on Figure A-8 in Attachment A. In Cañon de Valle, perennial water flow occurs in a reach from near the TA-16-260 outfall and extends up to approximately 7,000 feet downstream. A possible outfall-associated wetlands is located southeast of the TA-16 Burn Ground Unit.

The TA-16 Burn Ground Unit is part of the University of California/DOE National Pollutant Discharge Elimination System (NPDES) Multi-Sector General Permit for storm water discharges associated with industrial activity (current Permit Numbers NMR05A509 and NMR05A510, effective January 1, 1999). A Storm Water Pollution Prevention (SWPP) Plan, as required by the NPDES Multi-Sector General Permit and the Baseline General Permit, has been developed for the TA-16 Burn Ground. The plan identifies any potential pollutants and provides pollution prevention or control methods to prevent the discharge of pollutants in storm water runoff at the unit and the surrounding area. Under the SWPP Plan, the facility is required to implement best management practices to reduce the likelihood of pollutants entering the storm water discharges. The plan includes storm water run-on/runoff measures for active units as well as erosion control (e.g., rock check dams) to prevent dispersion of legacy contamination and sediments (see Figure A-13 in Attachment A).

Water quality data collected in Cañon de Valle since 1994 shows barium and RDX (a form of HE) at levels above New Mexico State Drinking Water standards. Barium concentrations are generally less than 5 parts per million and RDX is generally less than 200 parts per billion. Levels in water and sediment do not increase downstream from the TA-16 Burn Ground, suggesting that the Burn Ground is not the principal source of these surface water contaminants. To maintain compliance with the NPDES Multi-Sector General Permit, site inspections and an annual compliance evaluation are conducted at the TA-16 Burn Ground to evaluate the effectiveness of the SWPP Plan. The compliance evaluations are documented in a report that describes any major observations, incidents of noncompliance with the SWPP Plan, corrective actions, and any observations or changes made with respect to the SWPP Plan.

Stormwater monitoring for this operation is conducted using LANL's Storm Water Monitoring Station Network. Monitoring station E262 is located at the confluence of Cañon de Valle and Water Canyon and is directly downstream from the Burn Ground. This station was installed in 1999 and was in operation during the last two quarters of Fiscal Year (FY) 99. Precipitation during this time did not produce runoff at this station. Therefore, additional stations to sample the discharges leaving the area are proposed for installation by LANL in FY 00.

Potential impacts to soils from ongoing operations are minimized through the waste management practices described in Section H.2, and with the storm water run-on and runoff controls described in Section 2.2.7.

H.3.4 Protection of the Atmosphere

The predominant exposure pathway for OB of reactive wastes is inhalation of airborne products of complete and incomplete combustion. The NMED's Air Quality Bureau regulates the air emissions from the Burn Ground Unit under a permit issued under 20 NMAC 2.60, "Open Burning" (current Permit No. AQB.97.214, effective August 18, 1997). To obtain a permit under 20 NMAC 2.60, LANL submitted a permit application containing the following information for this pathway:

- The type and quantity of material to be burned. This meets the requirements of 20 NMAC 4.1, Subpart V, 264.601(c)(1) [6-14-00];
- The methods that will be used to ignite, maintain, and control the burning. This meets the requirements of 20 NMAC 4.1, Subpart V, 264.601(c)(3) [6-14-00]; and
- An ambient air quality impacts analysis at the nearest off-site receptor modeled with a gaussian plume model using site-specific meteorology, topography and worst-case emissions estimates. This meets the requirements of 20 NMAC 4.1, Subpart V, 264.601(c)(4) [6-14-00].

The NMED's open burning program recognizes that engineering controls are not available to prevent air emissions of hazardous constituents from open burning units. Instead, the program evaluates the methods of burning and relies on burning under good atmospheric dispersion conditions to minimize hazardous emissions impact. Thus, this program also meets the requirements of 20 NMAC 4.1, Subpart V, 264.601(c)(2) [6-14-00]. Burning must take place under atmospheric conditions (e.g., stability and wind speed/direction) that favor dispersion. However, winds cannot be so high that significant amounts of ash would become windborne.

Figures A-9 and A-10 in Attachment A of this permit renewal document show the wind roses for TA-6 and TA-49, where the wind observation towers closest to the TA-16 Burn Ground Unit are located.

In 1990, the National Park Service, the NMED, and LANL jointly operated an ambient air quality monitoring station at the nearest off-site receptor, Bandelier National Monument. This monitoring site was located very near TA-16 for three (3) years. NMED's Air Quality Bureau used the monitoring information and the impacts assessment, combined with knowledge of local air quality conditions, to ensure that air quality standards would not be exceeded. Air quality standards are set to protect human health (primary standards) and welfare (secondary standards). Secondary standards take into account the health and ecological impacts to domestic animals, wildlife, crops, vegetation, and physical structures. The open burning program meets the requirements of 20 NMAC 4.1, Subpart V, 264.601(5), (6), and (7) [6-14-00. The Air Quality Bureau requires no monitoring of open burning at the TA-16 Burn Ground.

H.4 REFERENCES

AEHA, 1987, "RCRA Part B Permit Writers' Guidance Manual for Department of Defense Open Burning/Open Detonation Units," U.S. Army Environmental Hygiene Agency, Aberdeen Proving Ground, Maryland.

Broxton, D., A. Crowder, M. Everett, R. Gilkeson, P. Longmire, J. Marin, D. Rogers, W. Stone, and R. Warren, 1999, "Interim Completion Report for Characterization Well R-25," draft Los Alamos National Laboratory document, Los Alamos, New Mexico.

Dransfield, B.J. and J.N. Gardner, 1985, "Subsurface Geology of the Pajarito Plateau, Española Basin, New Mexico," Los Alamos National Laboratory Report LA-10455-MS, Los Alamos, New Mexico.

Gardner, J.N., and L. House, 1987, "Seismic Hazards Investigations at Los Alamos National Laboratory, 1984 to 1985," Los Alamos National Laboratory Report LA-11072-MS, Los Alamos, New Mexico.

Hickmott, D., 1993, "Mapping South of S-Site," Los Alamos National Laboratory Memorandum CLS-ER/BM-93:001, Los Alamos, New Mexico.

LANL, 2000, "Groundwater Annual Status Report for Fiscal Year 1999," Los Alamos National Laboratory Status Report LA-13710-SR, Los Alamos, New Mexico.

LANL, 1999, "Voluntary Corrective Measures Completion Report for Potential Release Sites 16-006(g), Drum Storage Area Aggregate—[16-029(g2) and C-16-074], 16-005(d), 16-034(p)," Los Alamos National Laboratory Report LA-UR-99-3001, Los Alamos, New Mexico.

LANL, 1998a, "Los Alamos National Laboratory General Part A Permit Application," Revision 0.0, Los Alamos National Laboratory, Los Alamos, New Mexico.

LANL, 1998b, "Los Alamos National Laboratory General Part B Permit Application," Revision 1.0, Los Alamos National Laboratory, Los Alamos, New Mexico.

LANL, 1998c, "Hydrogeologic Workplan," Los Alamos National Laboratory, Los Alamos, New Mexico.

LANL, 1998d, "RFI Report for Potential Release Site 16-021(c)," Los Alamos National Laboratory Report LA-UR-98-4101, Los Alamos, New Mexico.

LANL, 1996, "Environmental Surveillance at Los Alamos during 1995," LA-13210-ENV, Los Alamos National Laboratory, Los Alamos, New Mexico.

LANL, 1993, "RFI Work Plan for Operable Unit 1082," Los Alamos National Laboratory Report LA-UR-93-1196, Los Alamos, New Mexico.

LANL, 1988, "Site Geology and Hydrology of Technical Area 16, Area P," Los Alamos National Laboratory Report LA-11209-MS, Los Alamos, New Mexico.

Newman, B. D., 1999, "An Examination of a Semiarid Mesa with High Explosives Contamination at Los Alamos, New Mexico, USA," in 1999 Geological Society of America Annual Meeting, Abstracts with Programs, pg. A-352.

Nyhan, J.W., L.W. Hacker, T.E. Calhoun, and D.L. Young, 1978, "Soil Survey of Los Alamos County, New Mexico," Los Alamos National Laboratory Informal Report LA-6779-MS, Los Alamos, New Mexico.

Purtymun, W.D., 1995, "Geologic and Hydrologic Records of Observation Wells, Test Holes, Test Wells, Supply Wells, Springs, and Surface Water in the Los Alamos Area," Los Alamos National Laboratory Report LA-12883-MS, Los Alamos, New Mexico.

Rogers, M.A., 1995, "Insert for Geologic Map of the Los Alamos National Laboratory Reservation," Mara, Inc., Los Alamos, New Mexico.

Vaniman, D., and K. Wohletz, 1990, "Results of Geological Mapping/Fracture Studies: TA-55 Area," Los Alamos National Laboratory Memorandum EES1-SH90-17, Los Alamos, New Mexico.

Table H-1

Miscellaneous Unit Regulatory References and Corresponding Permit Renewal Document Location

Regulatory Citation(s)	Description of Requirement	Location in this Permit Renewal Document
§264.601(a)	Prevention of release of contaminants to groundwater	Attachment H
§264.601(a)(1)	Volume and characteristics of waste considering potential for migration through containing structures	2.0, Attachment H
§264.601(a)(2)	Hydrologic/geologic characteristics	Attachment H
§264.601(a)(3)	Quality of groundwater including other sources of contamination and their cumulative impact on groundwater	Attachment H
§264.601(a)(4)	Quantity and direction of groundwater flow	Attachment H
§264.601(a)(5)	Proximity to and withdrawal rates of potential groundwater users	Attachment H
§264.601(a)(6)	Regional patterns of land use	Attachment A
§264.601(a)(7)	Potential for deposition and migration of waste constituents	Attachment H
§264.601(a)(8)	Potential for health risks caused by human exposure to waste constituents	Attachment H
§264.601(a)(9)	Potential for damage to domestic animals, wildlife, crops, vegetation, and physical structures caused by exposure to waste constituents	Attachment H
§264.601(b)	Prevention of release of contaminants to surface water	Attachment H
§264.601(b)(1)	Volume and characteristics of the waste	2.0, Attachment H
§264.601(b)(2)	Effectiveness and reliability of containment, confinement, and collection systems and structures	2.0, Attachment H
§264.601(b)(3)	Hydrologic characteristics of the unit and local area	Attachment H
§264.601(b)(4)	Regional precipitation patterns	Attachment H
§264.601(b)(5)	Quantity, quality, and direction of groundwater flow	Attachment H
§264.601(b)(6)	Proximity of the unit to surface water	Attachment A, Attachment H
§264.601(b)(7)	Current and potential uses of nearby surface waters and water quality standards for those waters	Attachment H
§264.601(b)(8)	Quality of surface waters and soils including other sources of contamination and their cumulative impact on surface waters and soils	Attachment H

Refer to footnote at end of table.

Table H-1 (Continued)

Miscellaneous Unit Regulatory References and Corresponding Permit Renewal Document Location

Regulatory Citation(s)	Description of Requirement	Location in this Permit Renewal Document
§264.601(b)(9)	Regional patterns of land use	Attachment A
§264.601(b)(10)	Potential for health risks caused by human exposure to waste constituents	Attachment H
§264.601(b)(11)	Potential for damage to domestic animals, wildlife, crops, vegetation, and physical structures caused by exposure to waste constituents	Attachment H
§264.601(c)	Prevention of release of contaminants to air	Attachment H
§264.601(c)(1)	Volume and characteristics of waste including its potential for emission	2.0, Attachment H
§264.601(c)(2)	Effectiveness and reliability of systems/structures to reduce/prevent emissions of hazardous constituents to the air	2.0, Attachment H
§264.601(c)(3)	Operating characteristics of the unit	2.0, Attachment H
§264.601(c)(4)	Characteristics of the unit and the surrounding area	2.0, Attachment H
§264.601(c)(5)	Existing quality of the air including other sources of contaminants and their cumulative impact on the air	Attachment H
§264.601(c)(6)	Potential health risks caused by human exposure to waste constituents	Attachment H
§264.601(c)(7)	Potential for damage to domestic animals, wildlife, crops, vegetation, and physical structures caused by exposure to waste constituents	Attachment H
§264.602	Monitoring, analysis, inspection, response, reporting, and corrective action	2.0, 4.0, Attachment H
§264.603	Post-closure care	Attachment F.2[a]
§264.15	General inspection requirements	Attachment C[a]
§264.33	Testing and Maintenance of Equipment	Attachment H
§264.75	Biennial report	2.0
§264.76	Unmanifested waste report	2.0
§264.77	Additional reports	2.0
§264.101	Corrective action for solid waste management units	4.0

[a] Requirement or information is also addressed in the "Los Alamos National Laboratory General Part B Permit Application," Revision 1.0 (LANL, 1998a), as appropriate.

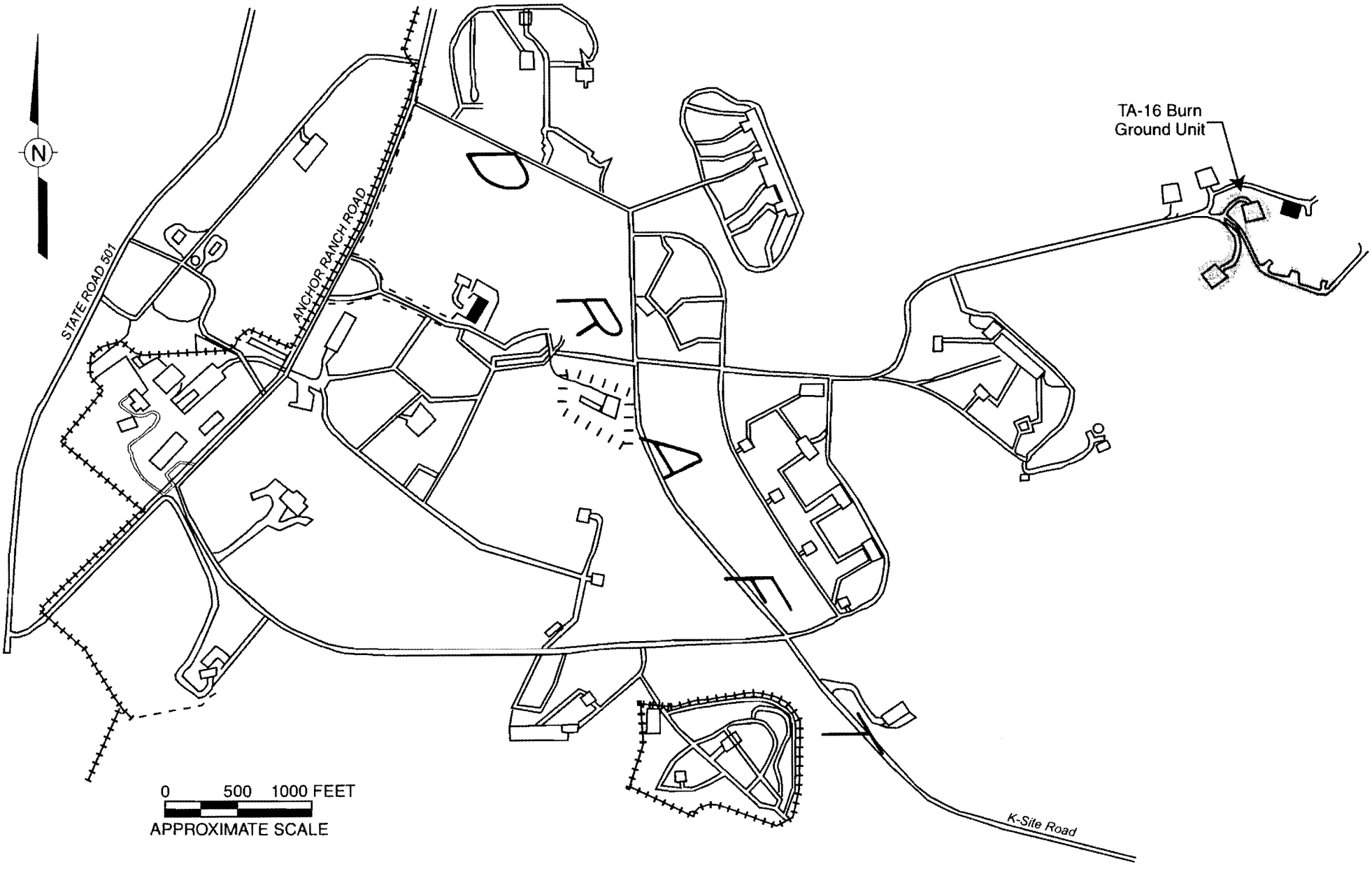

Figure H-1
Site Location Map for Technical Area (TA) 16 Burn Ground Unit

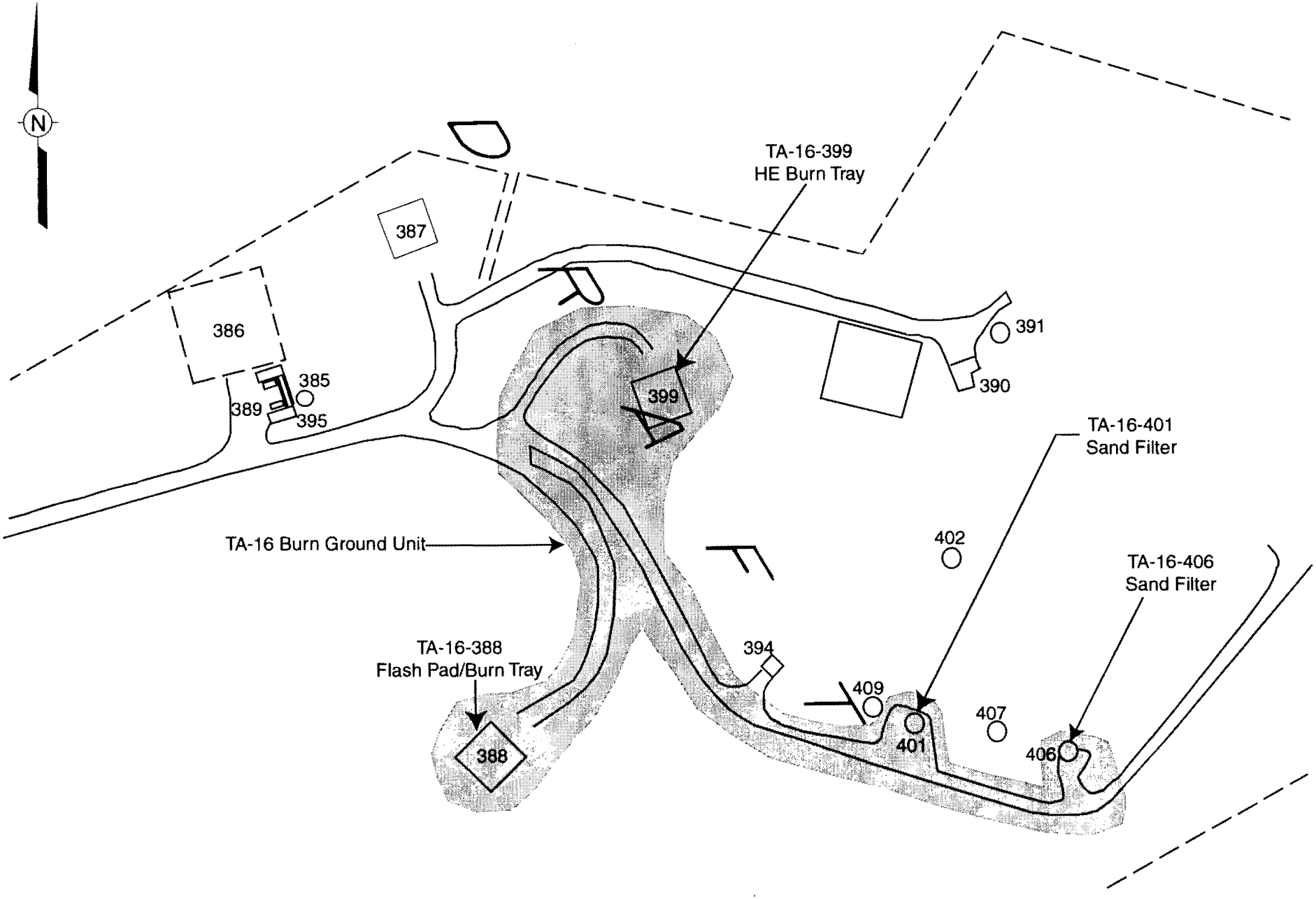

Figure H-2
Technical Area (TA-16) Burn Ground Unit

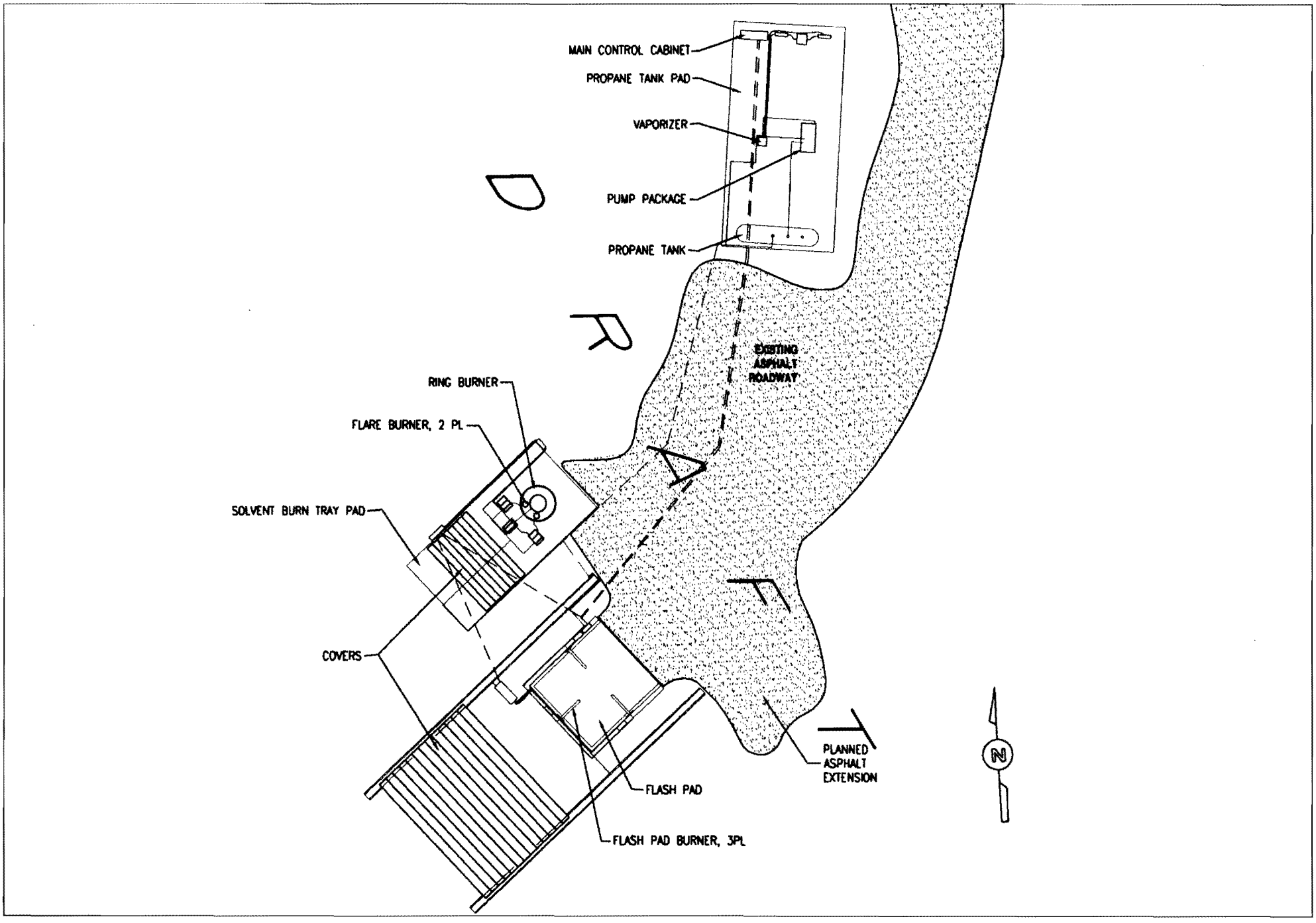

Figure H-3

Technical Area (TA) 16-388 Flash Pad/Burn Tray

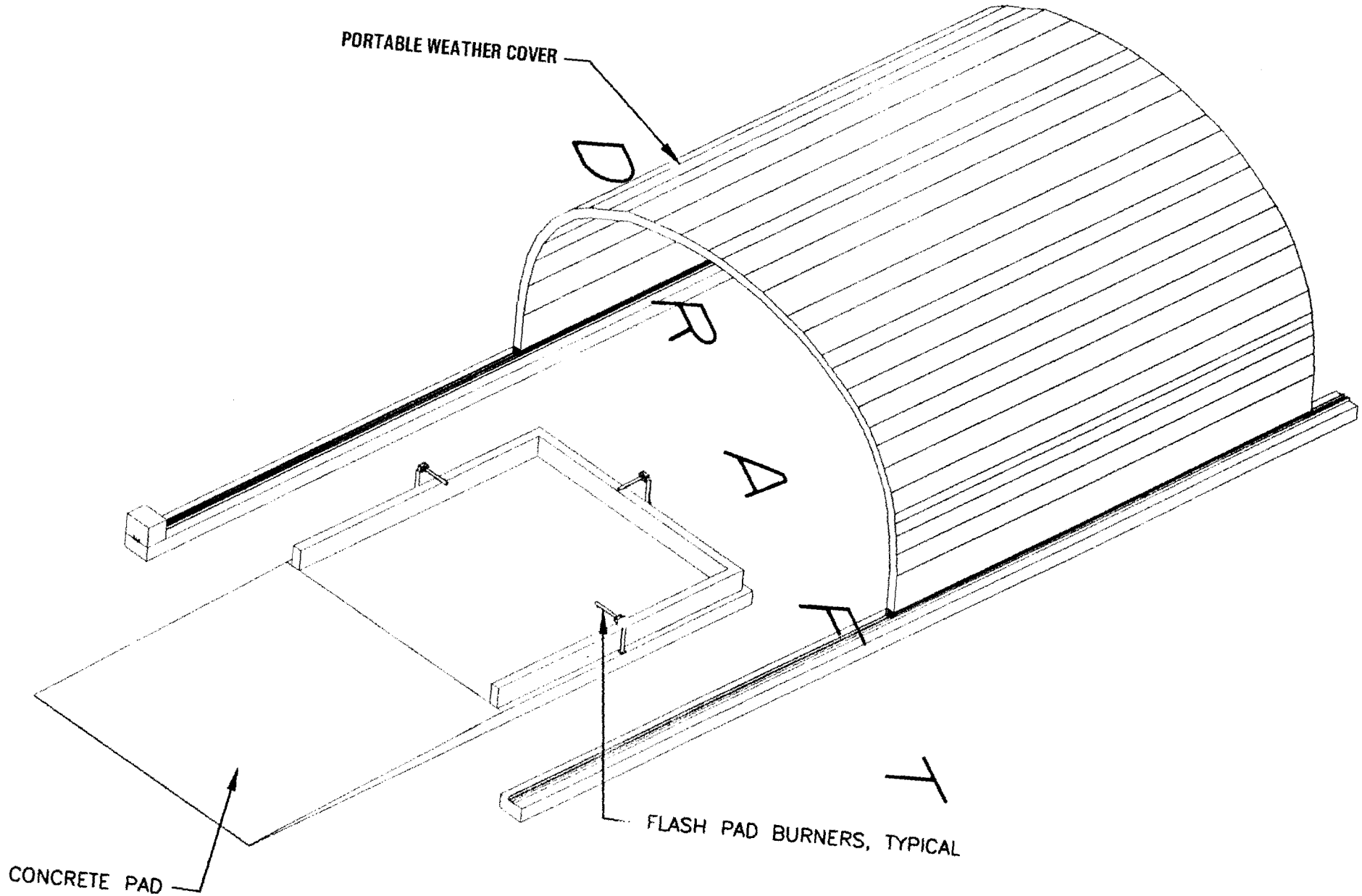

Figure H-4
Technical Area (TA) 16-7 Flash Pad

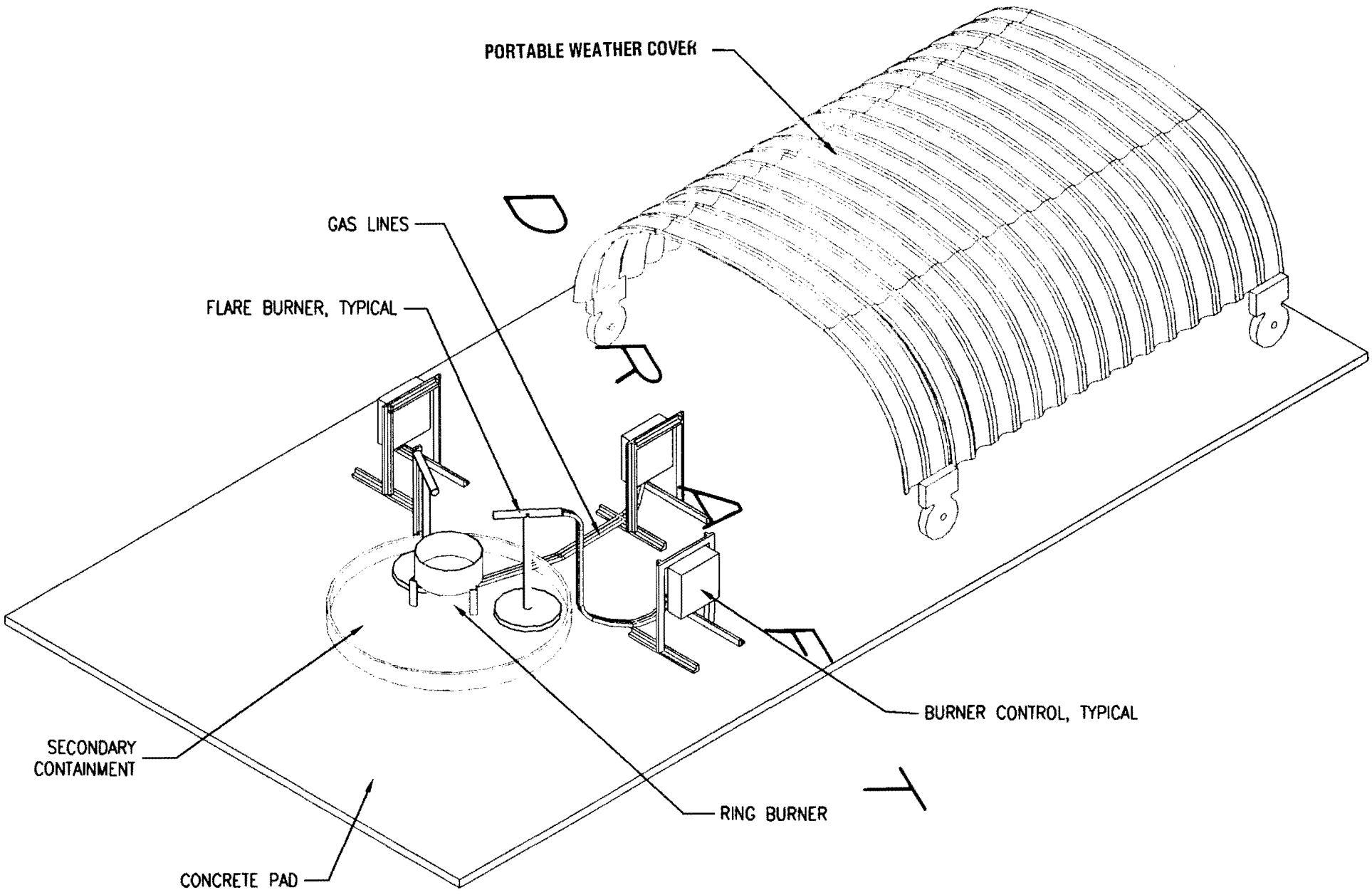

Figure H-5

Technical Area (TA) 16-388 Burn Tray

NOTE:
THE BURN TRAY IS METAL, & LINED WITH FIRE BRICK

ED HYDE
NEW MEXICO
10404
REGISTERED PROFESSIONAL ENGINEER

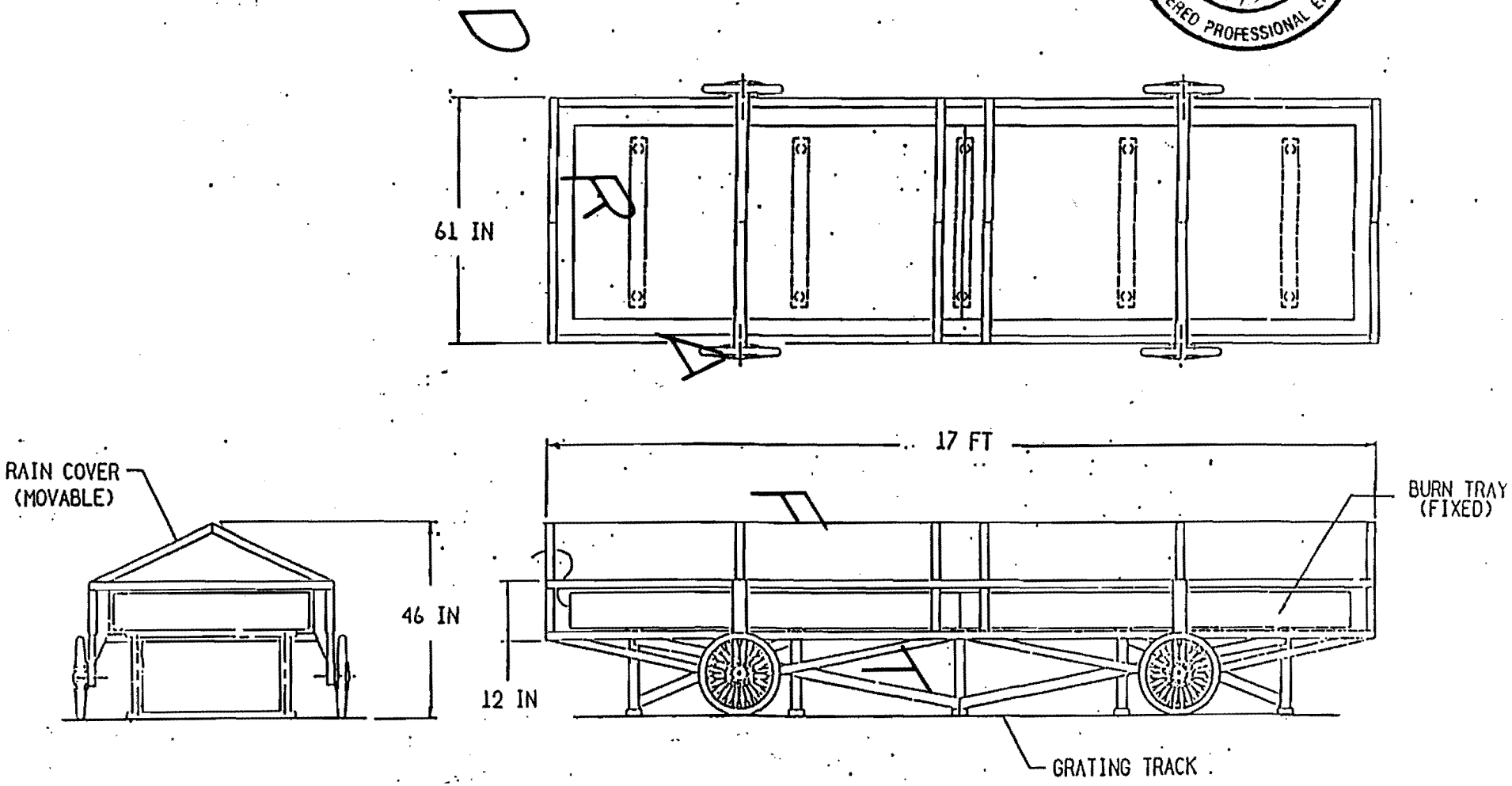

Figure H-6
Technical Area (TA) 16-399 HE Burn Tray

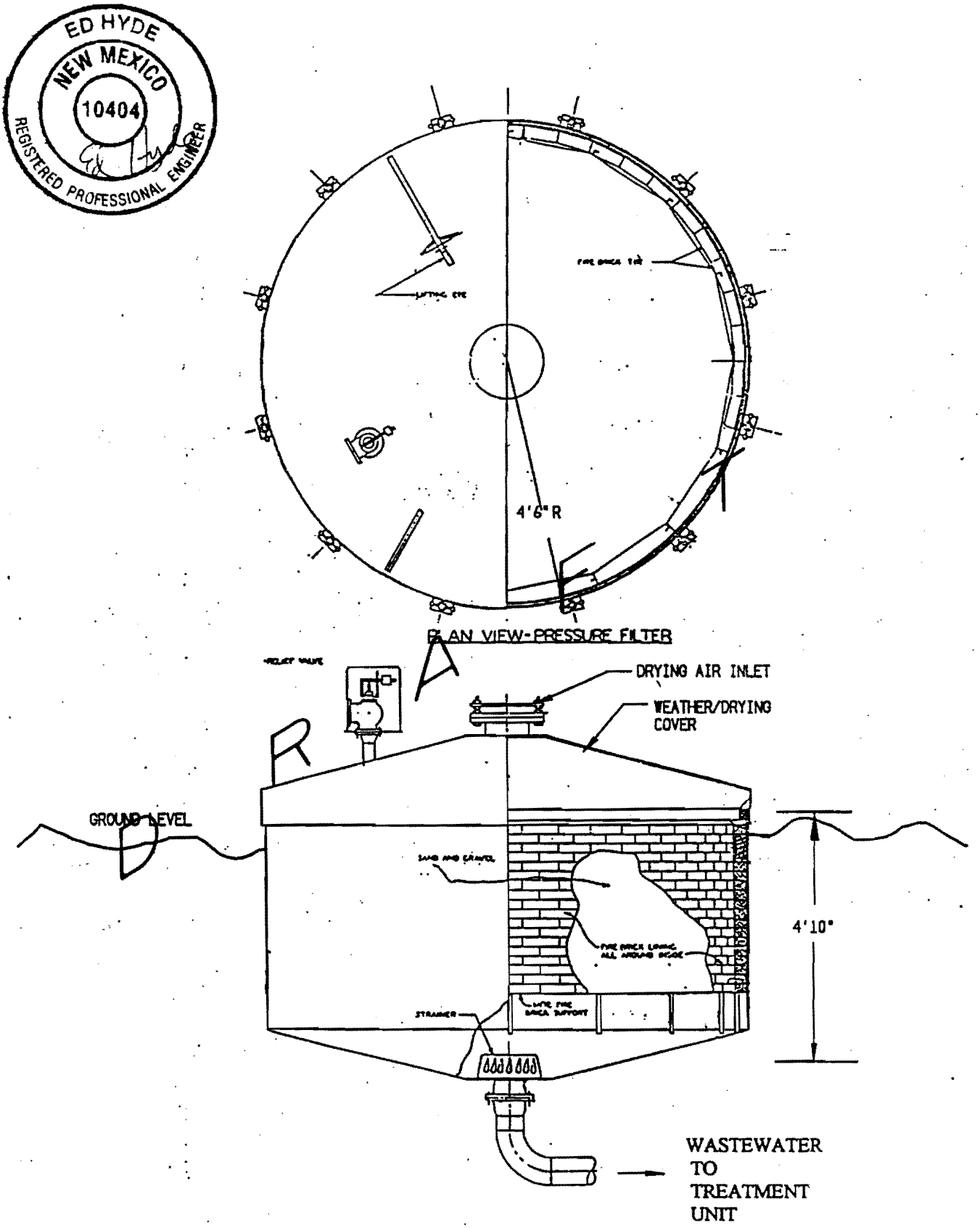

Figure H-7
Technical Area (TA) 16-401 and TA-16-406 Sand Filters

DRAFT

SUPPLEMENT H-1

The New Mexico Environment Department's August 17, 1995, Letter to the Department of Energy Los Alamos Area Office Regarding Comments Concerning Groundwater Contamination and Protection at Los Alamos National Laboratory (LANL), Los Alamos, New Mexico

State of New Mexico
ENVIRONMENT DEPARTMENT
Harold Runnels Building
1190 St. Francis Drive, P.O. Box 26110
Santa Fe, New Mexico 87502
(505) 827-2850

GARY E. JOHNSON
GOVERNOR

MARK E. WEIDLER
SECRETARY

EDGAR T. THORNTON
DEPUTY SECRETARY

17 August 1995

Mr. Larry Kirkman
Acting Area Manager
Department of Energy
Los Alamos Area Office
528 35th Street, Mail Stop A316
Los Alamos, NM 87544

RE: Comments Concerning Ground-water Contamination and Protection at Los Alamos National Laboratory(LANL), Los Alamos, New Mexico

Dear Mr. Kirkman:

The New Mexico Environment Department(NMED), Department of Energy Oversight Bureau(DOE OB) and Hazardous and Radioactive Material Bureau(HRMB) staff have assessed LANL's ground-water protection program, and have concluded that several problems concerning ground-water contamination and protection exist. The following summarizes major concerns of the NMED in relation to ground-water protection at LANL:

- From 1989 to 1993, water at approximately 271 ground-water monitoring stations(wells) exceeded Department of Energy, Environmental Protection Agency, New Mexico State drinking water standards or maximum contaminant levels, and NMED Water Quality Control Commission (WQCC) standards.

- Results of historical tritium concentration trend analyses, performed for seven LANL regional aquifer monitoring wells indicate that past laboratory releases of tritium-contaminated water may have commingled with the regional aquifer.

- LANL's Environmental Surveillance group recently reported preliminary data which indicate that the regional aquifer near production well O-4 contains strontium-90 at levels

four(4) times the New Mexico State drinking water standard and NMED WQCC standard.

- Both LANL and NMED DOE OB analytical data obtained from on-site and off-site springs are showing elevated concentrations of chlorinated solvents, high explosives, nitrates/nitrites as nitrogen and radionuclides.

- Preliminary modeling of the water balance in Mortandad Canyon by NMED suggests radionuclide-bearing effluent from LANL's liquid radioactive waste treatment facility(Tech Area 50) can leak out of the shallow(alluvium) aquifer and thus percolate towards the regional aquifer.

The above conditions warrant NMED's previous recommendations to develop a site-wide ground-water monitoring system to ascertain the impacts of laboratory operations to the groundwater regime. Currently, the impact to human health and the environment is unknown. A plan is required to determine adequately the effect past, current, and future laboratory operations have on the ground-water regime. The inadequacy of LANL's current ground-water monitoring system, the lack of basic hydrologic information, and the lack of compliance with both HSWA and RCRA ground-water monitoring requirements have previously been conveyed by NMED through memoranda, presentations, and letters. *(c.f. NMED internal letter, August 26, 1992; NMED letter to Jerry Bellows, November 25, 1992; NMED Initial Ground-Water Assessment Report, December 1992; NMED internal memo, February 5, 1993; NMED presentation at San Ildefonso, February 16, 1993; NMED/LANL meeting February 19, 1993; NMED letter to Diana Webb, March 10, 1993; NMED letter to Diana Webb, July 1, 1993; NMED letter to distribution, August 6, 1993; NMED memo to EPA, August 5, 1993; NMED internal memo, November 23, 1993; NMED letter to Diana Webb, February 28, 1994; NMED internal memo, February 22, 1994; NMED internal presentations, May 13, 1994; NMED letter to Joseph Vozella, July 7, 1994; NMED letter to EPA, January 23, 1995; NMED letter to EPA, January 24, 1995; NMED/DOE meeting, April 13, 1995; NMED letter to Larry Kirkman, May 30, 1995; NMED internal memo, July 5, 1995).*

Basic geology, hydrogeology, and pathways for contaminant transport have not been adequately addressed to date. At present, the following fundamental hydrogeologic issues/questi remain unresolved at LANL.

- Individual zones of saturation beneath LANL have not been adequately delineated, and the "hydraulic interconnection" between these is not understood. A facility-wide description of the hydrogeologic characteristics affecting ground-water flow beneath the facility cannot be made without adequate delineation of the perched-intermediate aquifer(s) beneath LANL.

- The recharge area(s) for the main and perched-intermediate aquifers have not been identified. It is unknown at this time if any significant quantity of water is recharging the main aquifer through fracture-fault zones which occur on the Pajarito Plateau. Characterization of these site-wide fault zones as potential pathways for aqueous migration is not complete. It is unknown what effect, if any, these zones may have on the direction of ground-water flow and hydraulic gradient of the main and perched-intermediate aquifers.

- The ground-water flow direction(s) of the main aquifer and perched-intermediate aquifer(s), as influenced by pumping of production wells are unknown.

- Aquifer characteristics cannot be determined without additional monitoring wells installed within specific intervals of the various aquifers beneath the facility. Locations of wells designed for aquifer testing cannot be addressed adequately without the delineation of individual zones of saturation beneath LANL.

At present, it appears that several different organizations (i.e., Environmental Restoration, Environmental Surveillance and Earth and Environmental Science divisions) at LANL are performing activities related to ground-water protection, monitoring and characterization. NMED does not consider that LANL's individual programs are adequately addressing the necessary requirements for a comprehensive ground-water protection program.

The hydrogeologic projects underway lack the integration necessary to meet the specific requirements of the HSWA permit and to address the fundamental hydrogeologic issues mentioned above. The lack of knowledge surrounding these fundamental hydrogeologic issues does not allow for compliance with the regulatory requirements of a site-wide characterization.

NMED is currently evaluating what work needs to be conducted and to what level of detail to assure compliance with both the HSWA hydrogeologic permit requirements and the requirements for ground-water monitoring of RCRA regulated units. This evaluation should be completed in October, 1995, and provided to EPA and then available to LANL.

During the course of NMED's investigation for the RCRA hydrogeologic evaluation, it has become evident to NMED that a RCRA site-wide hydrogeologic workplan should be developed and submitted to NMED and EPA for review and approval. A site-wide hydrogeologic workplan developed under the driver of RCRA will provide a mechanism to assure a compliance schedule with specific tasks to meet the permit objectives. The workplan should address both the HSWA hydrogeologic permit requirements and RCRA regulatory ground-water monitoring requirements.

Thank you for your attention in this matter. Should you have any questions concerning either technical or regulatory issues please contact Ms. Teri Davis of HRMB at (505) 827-1560. If you have any questions concerning technical matters please contact Mr. Michael Dale of DOE OB at (505) 672-0449.

Sincerely,

Ed Kelley PhD, Director, Water and Waste Management Division
New Mexico Environment Department

cc: Theodore Taylor, DOE LAAO, AAMEP, MS A316
Joseph Vosella, DOE LAAO, MS A316
Ivan Trujillo, DOE LAAO, MS A316
Matt Johansen, DOE LAAO, MS A316
Ken Zamora, Scientech/LAAO, MS A316
Barbara Driscoll, EPA Region 6
Gilbert Sanchez, San Ildefonso Pueblo, Environmental Director
Mark Weidler, NMED, Secretary
Peter Maggiore, NMED, Environmental Protection Division
Neil Weber, NMED, Chief, DOE Oversight Bureau
Benito Garcia, NMED, Chief, HRMB
Jim Piatt, NMED, Chief, SWQB
Marcy Leavitt, NMED, Chief, GWPRB
Sig Hecker, LANL, Laboratory Director, MS A100
Tom Baca, LANL, EM, MS J591
Jorg Jansen, LANL, EM/ER, MS M992
Steve Rae, LANL, ESH-18, MS K490

ATTACHMENT B

GROUNDWATER DATA FROM THE R-25 WELL

Source: "Interim Completion Report for Characterization Well R-25," draft document, 1999.

Note: This report will be provided to the New Mexico Environment Department when it is finalized.

ANALYTICAL RESULTS OF GROUNDWATER SAMPLES COLLECTED AT R-25[a]

DEPTH	DATE	Ag ppm	Al ppm	Std.D. +/-	Alk(Lab) ppm CaCO3	As ppm	B ppm	Std.D. +/-	Ba ppm	Std.D. +/-	Be ppm	std.D. +/-	Br ppm
747'	09/30/98	<0.001	0.07	0.01	70.0	0.0001	0.12	0.01	0.006	0.001	<0.002		0.05
747' total	09/30/98	<0.001	27.3	0.1	72.4	0.0024	0.15	0.01	0.12	0.01	0.012	0.001	0.05
867'	10/09/98	<0.001	<0.02		58.0	<0.0001	0.058	0.003	0.005	0.001	<0.002		0.05
867' total	10/09/98	<0.001	10.7	0.1	59.3	0.0013	0.087	0.002	0.11	0.01	0.002	0.001	0.05
1,047'	10/28/98	<0.001	0.04	0.01	57.5	<0.0001	0.090	0.002	0.007	0.001	<0.002		0.07
1,047' total	10/28/98	<0.001	10.0	0.1	59.1	0.0012	0.095	0.003	0.15	0.01	0.002	0.001	0.07
1,137'	11/03/98	<0.001	0.19	0.02	60.7	0.0003	0.074	0.002	0.005	0.001	<0.002		0.07
1,137 total	11/03/98	<0.001	124	1	95.1	0.017	0.097	0.004	1.26	0.01	0.010	0.001	0.06
1,184'	12/02/98	<0.001	0.02	0.01	50.5	0.0003	0.027	0.002	0.008	0.001	<0.002		0.05
1,184' total	12/02/98	<0.001	13.2	0.1	53.0	0.0041	0.021	0.003	0.13	0.01	<0.002		0.05
1,286'	12/18/98	<0.001	0.03	0.01	54.7	0.0001	0.014	0.001	0.014	0.001	<0.002		0.02
1,286' total	12/18/98	<0.001	199	2	62.5	0.015	0.013	0.003	1.75	0.01	0.009	0.001	0.02
1,407'	01/07/99	<0.001	0.10	0.01	53.0	0.0003	0.087	0.001	0.016	0.001	<0.002		0.04
1,407' total	01/07/99	<0.001	45.9	0.1	57.7	0.012	0.10	0.01	0.26	0.01	0.004	0.001	0.05
1,507'	01/13/99	<0.001	0.04	0.01	46.9	<0.0001	0.037	0.001	0.010	0.001	<0.002		0.02
1,507' total	01/13/99	<0.001	27.7	0.1	51.6	0.0041	0.032	0.004	0.21	0.01	<0.002		0.02
1,607'	02/03/99	<0.001	0.05	0.01	48.1	0.0001	0.027	0.002	0.014	0.001	<0.002		0.03
1,607' total	02/03/99	<0.001	15.7	0.1	51.1	0.0038	0.024	0.007	0.18	0.01	<0.002		0.04
1,747'	02/12/99	<0.001	<0.02		46.5	0.0008	0.011	0.001	0.013	0.001	<0.002		0.01
1,747' total	02/12/99	<0.001	2.14	0.01	48.3	0.0018	0.012	0.002	0.042	0.001	<0.002		0.01
1,867'	02/20/99	<0.001	0.07	0.01	44.2	0.0004	0.010	0.001	0.009	0.001	<0.002		0.02
1,867' total	02/20/99	<0.001	3.39	0.04	45.1	0.0018	0.010	0.002	0.045	0.001	<0.002		0.02
1,940'	02/23/99	<0.001	0.41	0.01	52.0	0.0002	0.013	0.002	0.015	0.001	<0.002		0.03
1,940' total	02/23/99	<0.001	21.2	0.3	53.7	0.0025	0.014	0.003	0.17	0.01	<0.002		0.03
1,942'	02/26/99	<0.001	0.03	0.01	47.4	0.0004	0.016	0.003	0.006	0.001	<0.002		0.01
1,942' total	02/26/99	<0.001	3.67	0.03	46.8	0.0024	0.016	0.005	0.045	0.001	<0.002		0.01

a. The data in this table should be used only for screening purposes.

ANALYTICAL RESULTS OF GROUNDWATER SAMPLES COLLECTED AT BOREHOLE R-25[a]

Ca ppm	Std.D. +/-	Cd ppm	Std.D. +/-	Cl ppm	ClO3 ppm	Co ppm	Std.D. +/-	CO3 ppm	Cond.(L) µS/cm	Cr ppm	Std.D. +/-	Cs ppm	Std.D. +/-	Cu ppm	Std.D. +/-	DEPTH
17.0	0.1	<0.001		11.1	<0.02	0.005	0.002	0	197	<0.002		<0.002		0.003	0.002	747'
21.8	0.1	0.0019	0.0002	11.0	<0.02	0.010	0.002	0	199	0.026	0.002	0.002		0.033	0.002	747' total
13.8	0.1	0.0023	0.0002	9.80	<0.02	<0.002		0	171	<0.002		<0.002		0.006	0.002	867'
16.6	0.2	0.0088	0.0002	9.76	<0.02	0.006	0.002	0	171	0.023	0.002	<0.002		0.021	0.002	867' total
14.6	0.1	<0.001		9.13	<0.02	<0.002		0	166	<0.002		<0.002		0.014	0.002	1,047'
18.2	0.1	<0.001		9.22	<0.02	0.006	0.002	0	166	0.021	0.002	<0.002		0.024	0.002	1,047' total
6.47	0.04	<0.001		8.04	<0.02	<0.002		0	175	<0.002		<0.002		0.003	0.002	1,137'
47.0	0.1	0.0011	0.0002	7.83	<0.02	0.028	0.004	0	202	0.17	0.01	0.013	0.002	0.56	0.02	1,137' total
11.0	0.1	<0.001		5.79	<0.02	<0.002		0	147	<0.002		<0.002		0.013	0.002	1,184'
15.4	0.1	<0.001		5.74	<0.02	0.008	0.002	0	155	0.072	0.005	0.006	0.002	0.20	0.01	1,184' total
8.70	0.02	<0.001		1.09	<0.02	<0.002		0	116	<0.002		<0.002		<0.002		1,286'
45.1	0.3	<0.001		1.09	<0.02	0.026	0.002	0	126	0.11	0.01	0.023	0.002	0.24	0.02	1,286' total
12.1	0.1	<0.001		8.03	<0.02	<0.002		0	154	<0.002		<0.002		<0.002		1,407'
31.3	0.3	<0.001		8.00	<0.02	0.012	0.002	0	161	0.11	0.01	0.003	0.002	0.12	0.01	1,407' total
7.83	0.04	<0.001		3.80	<0.02	<0.002		0	117	<0.002		<0.002		0.005	0.002	1,507'
13.4	0.1	<0.001		3.74	<0.02	0.008	0.002	0	121	0.044	0.004	0.006	0.002	0.12	0.01	1,507' total
9.53	0.04	<0.001		2.49	<0.02	<0.002		0	117	<0.002		<0.002		0.002	0.002	1,607'
15.9	0.1	<0.001		2.44	<0.02	0.006	0.002	0	117	0.22	0.02	<0.002		0.072	0.005	1,607' total
7.32	0.07	<0.001		1.54	<0.02	<0.002		0	106	<0.002		<0.002		0.003	0.002	1,747'
8.31	0.08	<0.001		1.53	<0.02	0.002	0.002	0	106	0.17	0.02	<0.002		0.026	0.002	1,747' total
5.89	0.01	<0.001		1.65	<0.02	<0.002		0	101	<0.002		<0.002		0.004	0.002	1,867'
7.11	0.08	<0.001		1.65	<0.02	0.003	0.002	0	101	0.089	0.004	<0.002		0.032	0.002	1,867' total
10.9	0.1	<0.001		2.15	<0.02	0.002	0.002	0	120	<0.002		<0.002		<0.002		1,940'
15.6	0.1	<0.001		2.16	<0.02	0.006	0.002	0	120	0.034	0.002	0.006	0.002	0.07	0.01	1,940' total
7.08	0.01	<0.001		1.77	<0.02	<0.002		0	105	<0.002		<0.002		<0.002		1,942'
8.23	0.02	<0.001		1.75	<0.02	0.003	0.002	0	105	0.046	0.002	0.003	0.002	0.027	0.002	1,942' total

The data in this table should be used only for screening purposes.

ANALYTICAL RESULTS OF GROUNDWATER SAMPLES COLLECTED AT BOREHOLE R-25[a]

F	Fe	Std.D.	Hardness	HCO3	Hg	I	K	Std.D.	Li	Std.D.	Mg	Std.D.	Mn	Std.D.	Mo	Std.D.	
ppm	ppm	+/-	ppm	ppm	ppm	ppm	ppm	+/-	ppm	+/-	ppm	+/-	ppm	+/-	ppm	+/-	DEPTH
0.17	0.04	0.01	70.5	85.4	0.00005	<0.01	2.59	0.01	0.02	0.01	6.82	0.02	1.39	0.01	0.006	0.002	747'
0.17	30.5	0.3	96.4	88.3	0.00007	<0.01	12.8	0.1	0.26	0.01	10.2	0.1	2.27	0.01	0.018	0.002	747' total
0.07	0.02	0.01	56.3	70.8	<0.00002	<0.01	0.77	0.04	<0.01		5.30	0.01	0.27	0.01	<0.002		867'
0.07	27.8	0.1	67.9	72.4	<0.00002	<0.01	2.24	0.01	0.02	0.01	6.43	0.01	0.77	0.01	0.008	0.002	867' total
0.07	0.05	0.01	58.2	70.2	<0.00002	<0.01	0.7	0.1	0.02	0.01	5.29	0.03	0.19	0.01	<0.002		1,047'
0.09	16.8	0.1	70.6	72.1	<0.00002	<0.01	2.2	0.1	0.02	0.01	6.10	0.02	0.77	0.01	0.009	0.002	1,047' total
0.12	0.13	0.01	25.8	74.1	<0.00002	<0.01	2.07	0.06	0.02	0.01	2.35	0.02	0.11	0.01	<0.002		1,137'
0.14	150	1	208.8	116	0.00018	<0.01	13.3	0.1	0.10	0.01	22.2	0.2	5.44	0.01	0.023	0.002	1,137' total
0.03	<0.01		41.0	61.6	<0.00002	<0.01	2.17	0.01	0.04	0.01	3.29	0.01	0.18	0.01	0.002	0.002	1,184'
0.04	34.3	0.2	60.4	64.7	<0.00002	<0.01	4.46	0.01	0.05	0.01	5.32	0.01	0.49	0.01	0.022	0.002	1,184' total
0.10	0.02	0.01	33.4	66.7	0.00006	<0.01	1.54	0.01	0.02	0.01	2.84	0.04	0.25	0.01	0.046	0.004	1,286'
0.12	123	1	184	76.3	0.00008	<0.01	16.0	0.1	0.17	0.01	17.4	0.1	2.14	0.03	0.055	0.004	1,286' total
0.09	0.17	0.01	48.6	64.7	<0.00002	<0.01	1.59	0.03	<0.01		4.47	0.01	0.21	0.01	0.007	0.002	1,407'
0.10	80.9	0.6	140	70.4	0.00005	<0.01	4.29	0.01	0.03	0.01	14.9	0.1	0.95	0.01	0.044	0.002	1,407' total
0.06	0.07	0.01	31.6	57.2	0.00005	<0.01	1.34	0.01	0.01	0.01	2.92	0.02	0.19	0.01	0.017	0.002	1,507'
0.09	95.9	0.1	60.0	62.9	0.00005	<0.01	4.03	0.01	0.03	0.01	6.44	0.03	0.96	0.01	0.048	0.004	1,507' total
0.06	0.12	0.01	36.8	58.7	<0.00002	<0.01	1.30	0.03	0.02	0.01	3.15	0.02	0.19	0.01	0.014	0.002	1,607'
0.07	47.2	0.2	59.1	62.3	<0.00002	<0.01	2.97	0.02	0.02	0.01	4.70	0.01	0.51	0.01	0.048	0.004	1,607' total
0.12	1.75	0.02	28.6	56.7	<0.00002	<0.01	2.01	0.01	0.02	0.01	2.50	0.01	0.10	0.01	0.007	0.002	1,747'
0.16	11.7	0.1	32.1	58.9	<0.00002	<0.01	2.17	0.01	0.03	0.01	2.76	0.01	0.17	0.01	0.018	0.002	1,747' total
0.16	0.61	0.02	23.3	53.9	0.00002	<0.01	2.60	0.01	0.02	0.01	2.09	0.01	0.11	0.01	0.006	0.002	1,867'
0.18	14.8	0.1	28.3	55.0	0.00005	<0.01	2.94	0.02	0.02	0.01	2.57	0.03	0.20	0.01	0.019	0.002	1,867' total
0.06	0.76	0.01	41.8	63.5	<0.00002	<0.01	1.18	0.02	0.01	0.01	3.54	0.01	0.14	0.01	0.003	0.002	1,940'
0.06	41.7	0.6	67.4	65.5	0.00005	<0.01	3.32	0.03	0.02	0.01	6.01	0.01	0.69	0.01	0.024	0.002	1,940' total
0.14	0.52	0.01	28.4	57.8	<0.00002	<0.01	2.78	0.01	0.01	0.01	2.61	0.02	0.30	0.01	0.030	0.002	1,942'
0.14	28.7	0.5	33.4	57.1	<0.00002	<0.01	3.23	0.02	0.02	0.01	3.12	0.02	0.54	0.01	0.062	0.002	1,942' total

a. The data in this table should be used only for screening purposes.

ANALYTICAL RESULTS OF GROUNDWATER SAMPLES COLLECTED AT BOREHOLE R-25[a]

Na ppm	Std.D. +/-	NH4 ppm	Ni ppm	Std.D. +/-	NO2 ppm	NO3 ppm	Oxalate ppm	Pb ppm	Std.D. +/-	pH Lab	PO4 ppm	Rb ppm	Std.D. +/-	Sb ppm	Se ppm	DEPTH
11.5	0.1	0.03	0.016	0.002	<0.02	4.17	<0.02	<0.002		7.69	<0.05	0.012	0.002	0.0005	<0.0001	747'
22.0	0.1	0.04	0.032	0.002	<0.02	4.14	<0.02	0.040	0.004	7.35	<0.05	0.12	0.01	0.0006	0.0002	747' total
12.9	0.1	0.03	0.007	0.002	<0.02	4.02	<0.02	<0.002		7.52	<0.05	0.005	0.002	0.0001	<0.0001	867'
13.7	0.1	<0.02	0.029	0.002	<0.02	3.37	<0.02	0.008	0.002	7.37	<0.05	0.018	0.002	0.0004	<0.0001	867' total
12.4	0.1	0.05	0.004	0.002	<0.02	3.55	<0.02	<0.002		7.74	<0.05	0.003	0.002	0.0002	<0.0001	1,047'
13.4	0.1	0.13	0.012	0.002	<0.02	2.93	<0.02	0.008	0.002	7.29	<0.05	0.018	0.002	0.0002	<0.0001	1,047' total
29.2	0.4	0.08	<0.002		<0.02	3.84	<0.02	<0.002		7.92	<0.05	0.004	0.002	0.0008	<0.0001	1,137'
33.1	0.2	0.74	0.13	0.01	<0.02	<0.02	<0.02	0.18	0.01	7.63	<0.05	0.12	0.01	0.0008	0.0001	1,137' total
13.9	0.1	0.18	0.018	0.002	<0.02	3.32	0.82	<0.002		7.38	0.07	0.002	0.002	0.0002	<0.0001	1,184'
15.0	0.1	0.19	0.083	0.004	<0.02	3.37	0.81	0.028	0.002	7.14	0.07	0.031	0.002	0.0008	<0.0001	1,184' total
11.9	0.1	<0.02	0.002	0.002	<0.02	1.70	0.05	<0.002		7.12	<0.05	0.002	0.002	0.0003	<0.0001	1,286'
28.6	0.3	0.02	0.19	0.01	<0.02	1.41	0.10	0.089	0.005	7.38	<0.05	0.13	0.01	0.0008	0.0001	1,286' total
12.6	0.1	<0.02	0.005	0.002	<0.02	2.38	<0.02	<0.002		7.40	<0.05	0.002	0.002	0.0002	<0.0001	1,407'
15.2	0.1	0.04	0.072	0.004	0.05	2.25	<0.02	0.056	0.004	6.96	<0.05	0.028	0.002	0.0006	<0.0001	1,407' total
12.5	0.1	<0.02	0.003	0.002	<0.02	1.31	0.16	0.002	0.002	7.39	<0.05	0.002	0.002	0.0001	<0.0001	1,507'
13.3	0.1	<0.02	0.050	0.004	<0.02	1.22	0.13	0.028	0.002	7.43	<0.05	0.026	0.002	0.0007	<0.0001	1,507' total
9.98	0.04	<0.02	0.009	0.002	<0.02	1.86	0.06	<0.002		7.24	<0.05	0.002	0.002	0.0003	<0.0001	1,607'
12.7	0.1	<0.02	0.12	0.01	<0.02	1.82	0.05	0.083	0.005	6.80	<0.05	0.013	0.002	0.0057	<0.0001	1,607' total
11.0	0.1	<0.02	0.011	0.002	<0.01	1.86	0.07	0.061	0.004	7.14	<0.02	0.003	0.002	0.0010	<0.0001	1,747'
10.9	0.1	<0.02	0.078	0.002	<0.01	1.35	0.02	0.089	0.005	6.94	<0.02	0.006	0.002	0.0073	<0.0001	1,747' total
10.9	0.1	<0.02	0.020	0.002	<0.02	1.93	0.11	0.004	0.002	7.40	<0.05	0.005	0.002	0.0007	<0.0001	1,867'
11.1	0.1	<0.02	0.050	0.004	0.13	0.88	<0.02	0.11	0.01	6.83	<0.05	0.007	0.002	0.0069	<0.0001	1,867' total
9.35	0.03	<0.02	<0.002		<0.02	1.81	<0.02	<0.002		7.45	<0.05	0.004	0.002	0.0001	<0.0001	1,940'
10.7	0.1	<0.02	0.027	0.002	<0.02	1.69	<0.02	0.021	0.002	7.48	<0.05	0.013	0.002	0.0008	0.0004	1,940' total
10.1	0.1	<0.02	0.003	0.002	<0.01	1.53	<0.02	<0.002		7.46	<0.02	0.007	0.002	0.0003	<0.0001	1,942'
10.3	0.1	<0.02	0.017	0.002	0.12	1.11	<0.02	0.020	0.002	6.98	<0.02	0.009	0.002	0.0008	0.0001	1,942' total

a. The data in this table should be used only for screening purposes.

ANALYTICAL RESULTS OF GROUNDWATER SAMPLES COLLECTED AT BOREHOLE R-25[a]

Si ppm	Std.D +/-	SiO2 ppm calc	SO4 ppm	S2O3 ppm	Sn ppm	Std.D. +/-	Sr ppm	Std.D. +/-	Ti ppm	Std.D. +/-	Tl ppm	Std.D. +/-	V ppm	std.D. +/-	Zn ppm	Std.D. +/-	DEPTH
20.7	0.1	44.3	9.66	<0.01	<0.005		0.12	0.01	<0.002		<0.002		<0.002		<0.01		747'
78.5	0.1	168	9.61	<0.01	0.014	0.005	0.20	0.01	0.42	0.01	<0.002		0.011	0.001	0.19	0.01	747' total
18.4	0.1	39.4	8.93	<0.01	<0.005		0.10	0.01	<0.002		<0.002		<0.002		<0.01		867'
41.6	0.1	89.0	8.90	<0.01	<0.005		0.15	0.01	0.23	0.01	<0.002		0.009	0.001	0.08	0.01	867' total
25.1	0.2	53.7	7.87	<0.01	<0.005		0.11	0.01	<0.002		<0.002		<0.002		0.02	0.01	1047'
41.0	0.1	87.7	8.00	<0.01	<0.005		0.17	0.01	0.28	0.01	<0.002		0.009	0.003	0.14	0.01	1,047' total
21.1	0.1	45.2	10.8	<0.01	<0.005		0.051	0.001	0.003	0.001	<0.002		0.011	0.001	<0.01		1,137'
122	1	261	11.1	<0.01	<0.005		0.60	0.01	1.84	0.01	0.003	0.002	0.10	0.01	0.60	0.01	1,137' total
20.2	0.2	43.2	7.49	<0.01	<0.005		0.079	0.001	<0.002		<0.002		<0.002		0.34	0.01	1,184'
46.6	0.1	99.7	7.51	<0.01	<0.005		0.15	0.01	0.33	0.01	<0.002		0.010	0.001	1.67	0.01	1,184' total
15.9	0.2	34.0	4.17	<0.01	<0.005		0.056	0.001	<0.002		<0.002		<0.002		<0.01		1,286'
66.6	0.4	143	4.42	<0.01	<0.005		0.57	0.01	7.85	0.02	<0.002		0.075	0.001	0.33	0.01	1,286' total
20.7	0.1	44.3	7.44	<0.01	<0.005		0.11	0.01	<0.002		<0.002		<0.002		0.01	0.01	1,407'
116	1	248	7.56	<0.01	<0.005		0.35	0.01	0.49	0.01	<0.002		0.034	0.002	0.34	0.01	1,407' total
5.29	0.01	11.3	4.64	<0.01	<0.005		0.048	0.003	<0.002		<0.002		<0.002		0.02	0.01	1,507'
63.9	0.1	137	4.63	<0.01	<0.005		0.12	0.01	0.80	0.01	<0.002		0.012	0.001	0.10	0.01	1,507' total
17.5	0.1	37.5	3.77	<0.01	<0.005		0.057	0.001	<0.002		<0.002		<0.002		0.03	0.01	1,607'
45.7	0.1	97.8	3.80	<0.01	<0.005		0.15	0.01	0.39	0.01	<0.002		0.007	0.001	0.43	0.01	1,607' total
28.1	0.1	60.1	1.50	<0.01	<0.005		0.045	0.001	<0.002		<0.002		0.003	0.001	0.08	0.01	1,747'
32.4	0.1	69.3	1.49	<0.01	<0.005		0.058	0.001	0.064	0.001	<0.002		0.007	0.002	0.28	0.01	1,747' total
28.4	0.2	60.8	1.55	<0.01	<0.005		0.039	0.001	0.002	0.001	<0.002		<0.002		0.02	0.01	1,867'
36.6	0.3	78.3	1.59	<0.01	<0.005		0.054	0.001	0.11	0.01	<0.002		0.005	0.003	0.18	0.01	1,867' total
28.1	0.1	60.1	3.56	<0.01	<0.005		0.071	0.001	0.019	0.001	<0.002		<0.002		<0.01		1,940'
75.5	0.1	162	3.58	<0.01	<0.005		0.13	0.01	0.69	0.01	<0.002		0.012	0.002	0.08	0.01	1,940' total
25.0	0.1	53.5	2.45	<0.01	<0.005		0.040	0.001	<0.002		<0.002		<0.002		<0.01		1,942'
36.0	0.1	77.0	2.49	<0.01	<0.005		0.056	0.001	0.12	0.01	<0.002		0.005	0.004	0.04	0.01	1,942' total

a. The data in this table should be used only for screening purposes.

ANALYTICAL RESULTS OF GROUNDWATER SAMPLES COLLECTED AT BOREHOLE R-25[a]

TSS ppm	TDS ppm	Cation Sum	Anion Sum	Balance	DEPTH
1900	265.1	2.044	1.996	0.8234	747'
1900	506.3	8.017	2.041	1.1885	747' total
314	222.6	1.720	1.695	0.0149	867'
314	330.6	4.731	1.710	0.9380	867' total
637	236.4	1.744	1.638	0.0626	1,047'
637	319.3	4.111	1.666	0.8466	1,047' total
---	208.7	1.880	1.739	0.0779	1,137'
---	1006.6	28.074	2.365	1.6892	1,137' total
---	194.7	1.517	1.387	0.0890	1,184'
---	333.6	5.373	1.438	1.1555	1,184' total
---	166.7	1.243	1.245	-0.0016	1,286'
---	853.2	34.195	1.403	1.8423	1,286' total
---	207.1	1.591	1.490	0.0657	1,407'
---	672.1	13.066	1.585	1.5673	1,407' total
---	135.1	1.227	1.168	0.0497	1,507'
---	432.8	10.155	1.259	1.5587	1,507' total
---	165.7	1.226	1.146	0.0677	1,607'
---	328.8	6.128	1.204	1.3432	1,607' total
---	175.4	1.060	1.041	0.0174	1,747'
---	204.0	2.058	1.071	0.6312	1,747' total
---	165.8	1.055	1.003	0.0510	1,867'
---	209.0	2.314	1.009	0.7856	1,867' total
---	199.5	1.367	1.209	0.1222	1,940'
---	403.5	6.532	1.241	1.3616	1,940' total
---	169.2	1.123	1.082	0.0380	1,942'
---	231.4	3.172	1.066	0.9938	1,942' total

a. The data in this table should be used only for screening purposes.

ATTACHMENT C

SURFACE WATER AND SEDIMENT SAMPLING RESULTS FROM CAÑON DE VALLE

Source: "RFI Report for Potential Release Site 16-021(c)", LA-UR-98-4101, September 1998, Los Alamos National Laboratory, Los Alamos, New Mexico.

DRAFT

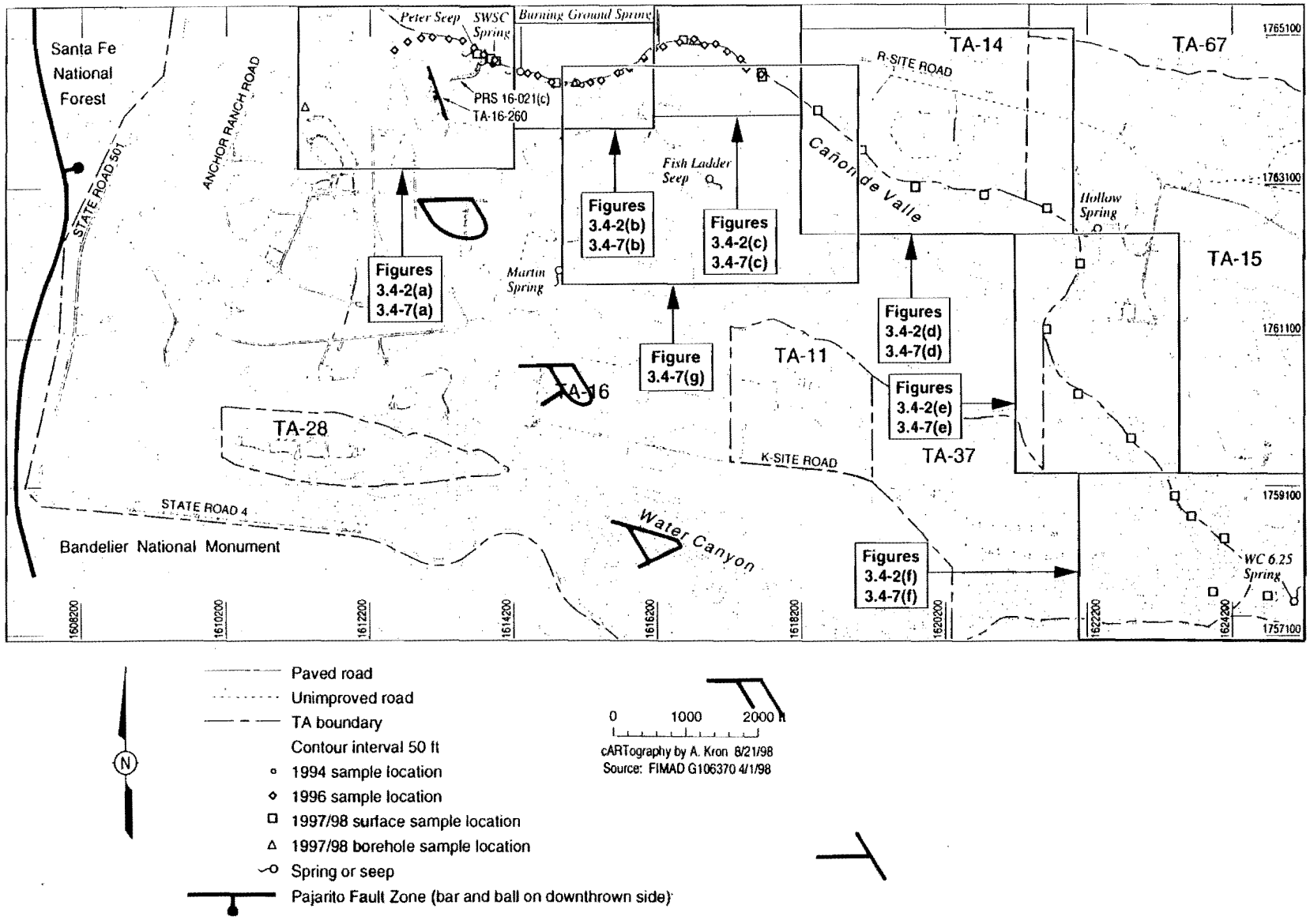

Figure 3.4-1. Index to maps showing contamination and location of samples collected during the three investigations

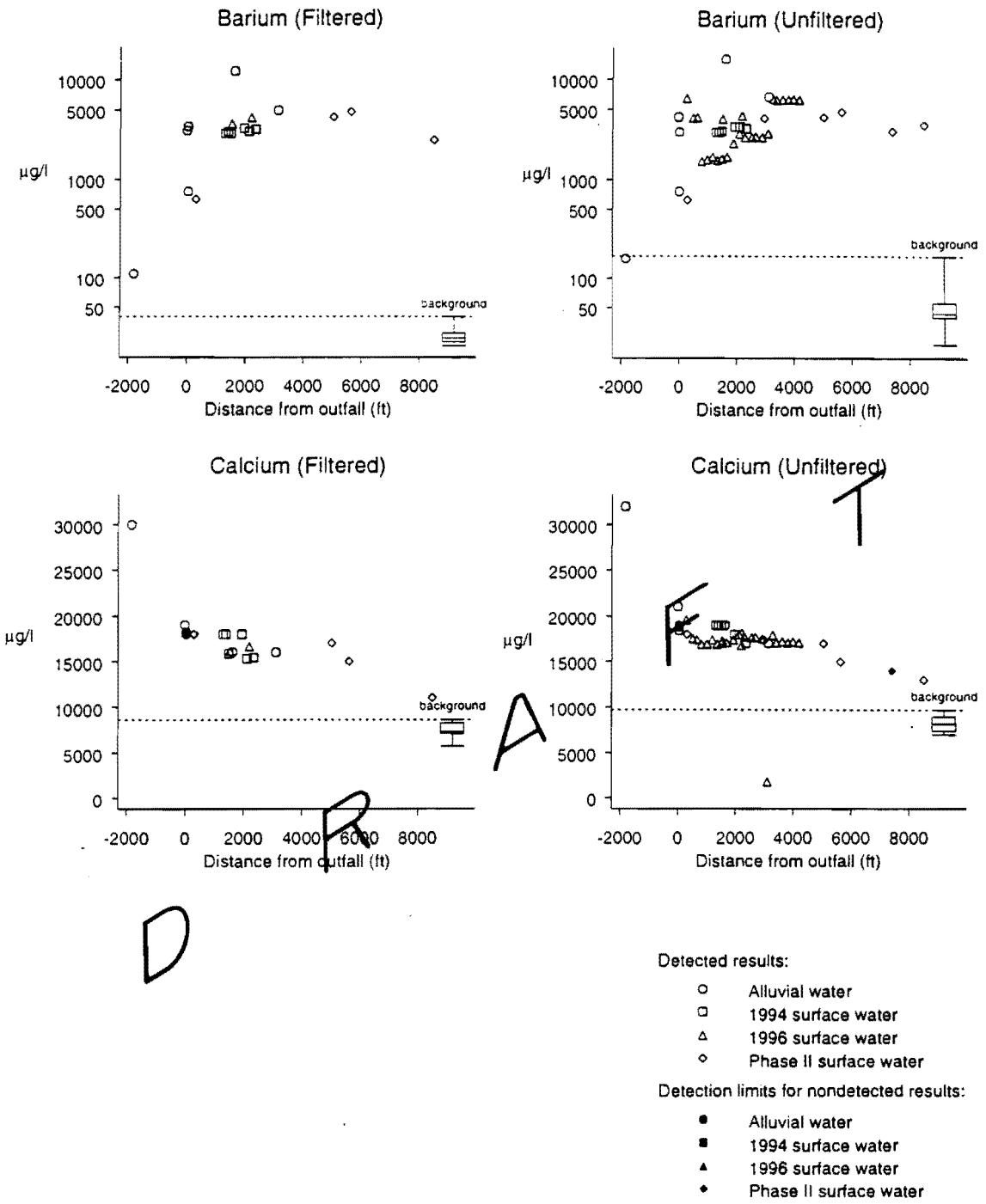

Figure 3.4-10(a). Barium and calcium in water compared with distance from TA-16-260 outfall

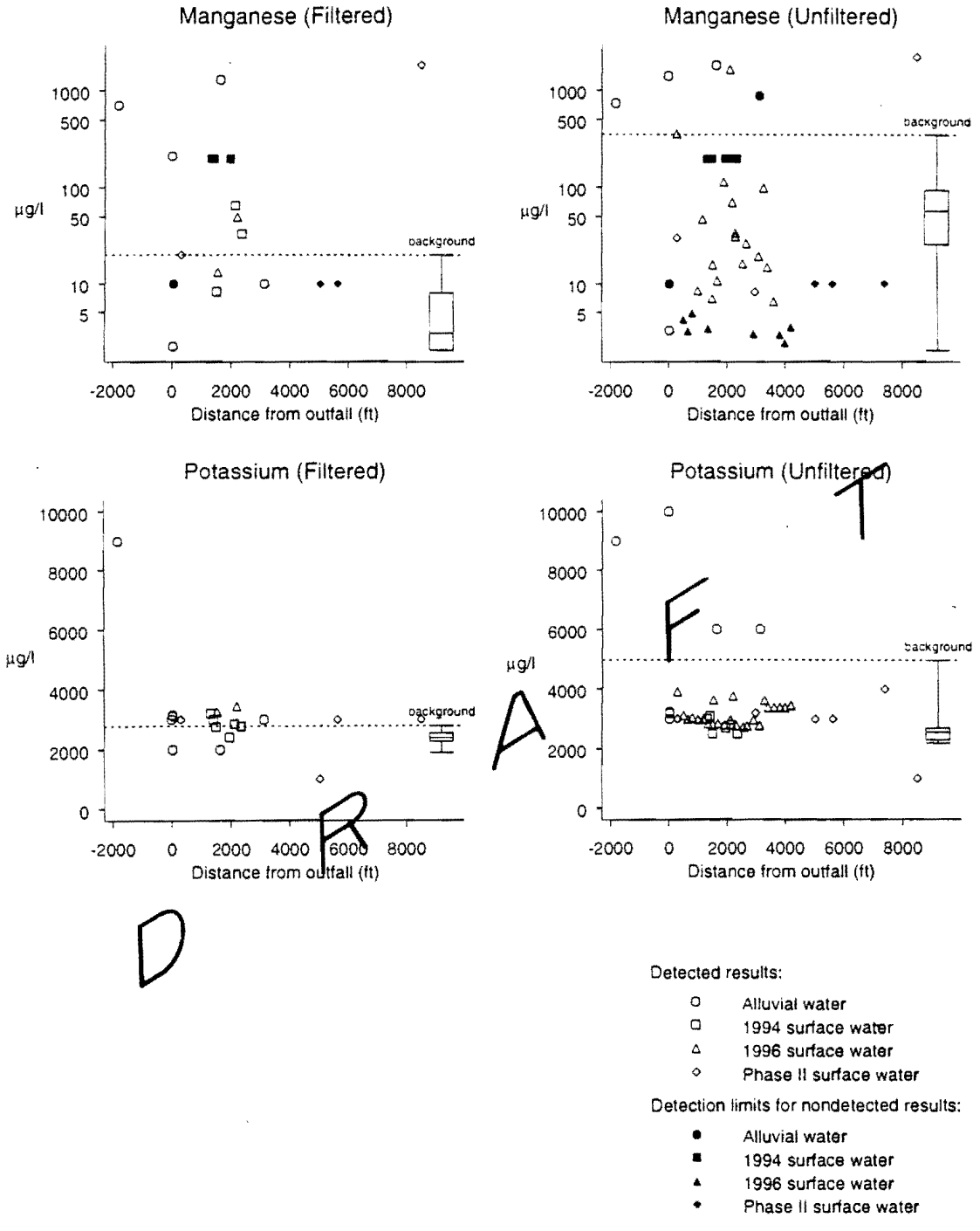

Figure 3.4-10(b). Manganese and potassium in water compared with distance from TA-16-260 outfall

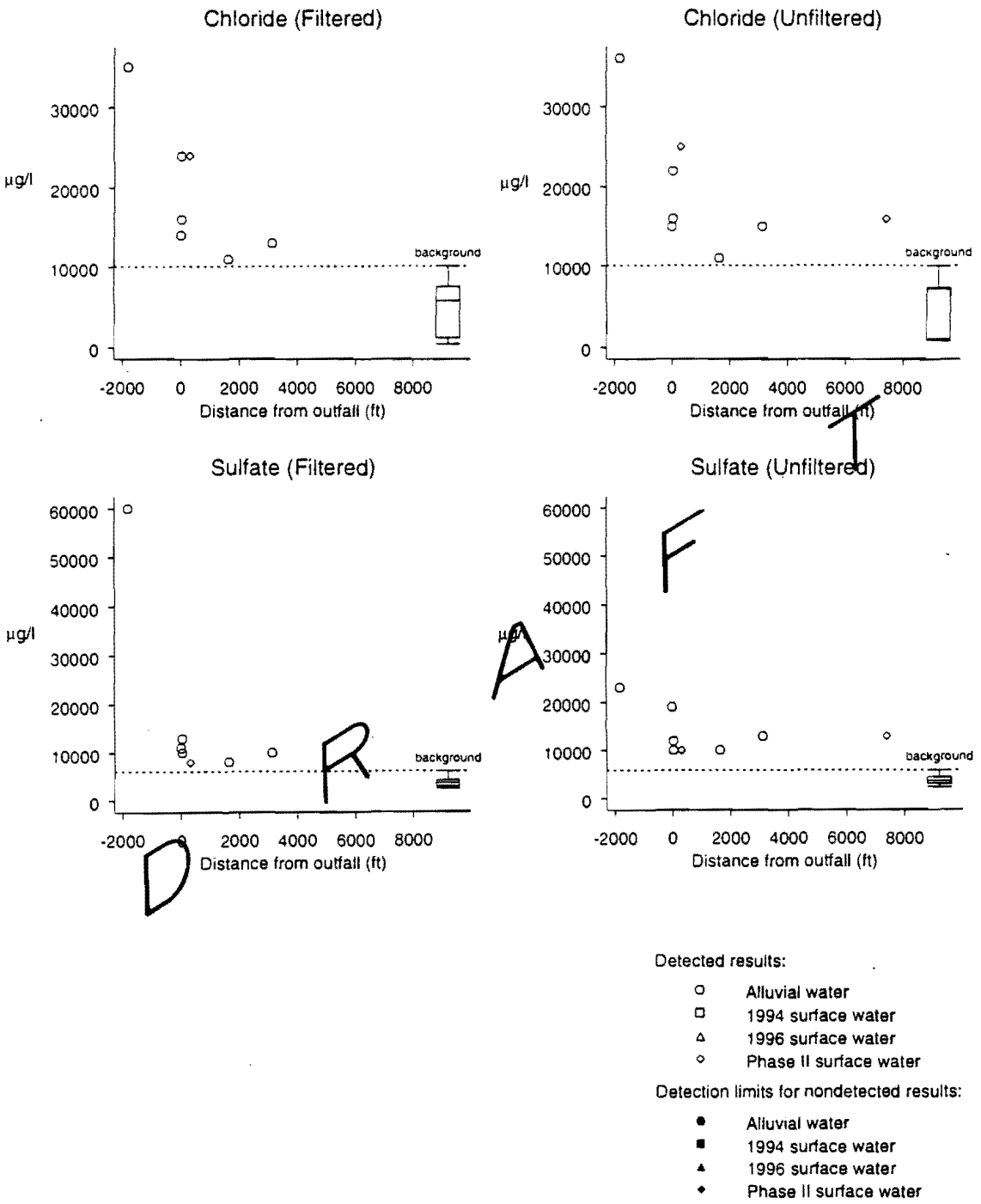

Figure 3.4-10(c). Chloride and sulfate in water compared with distance from TA-16-260 outfall

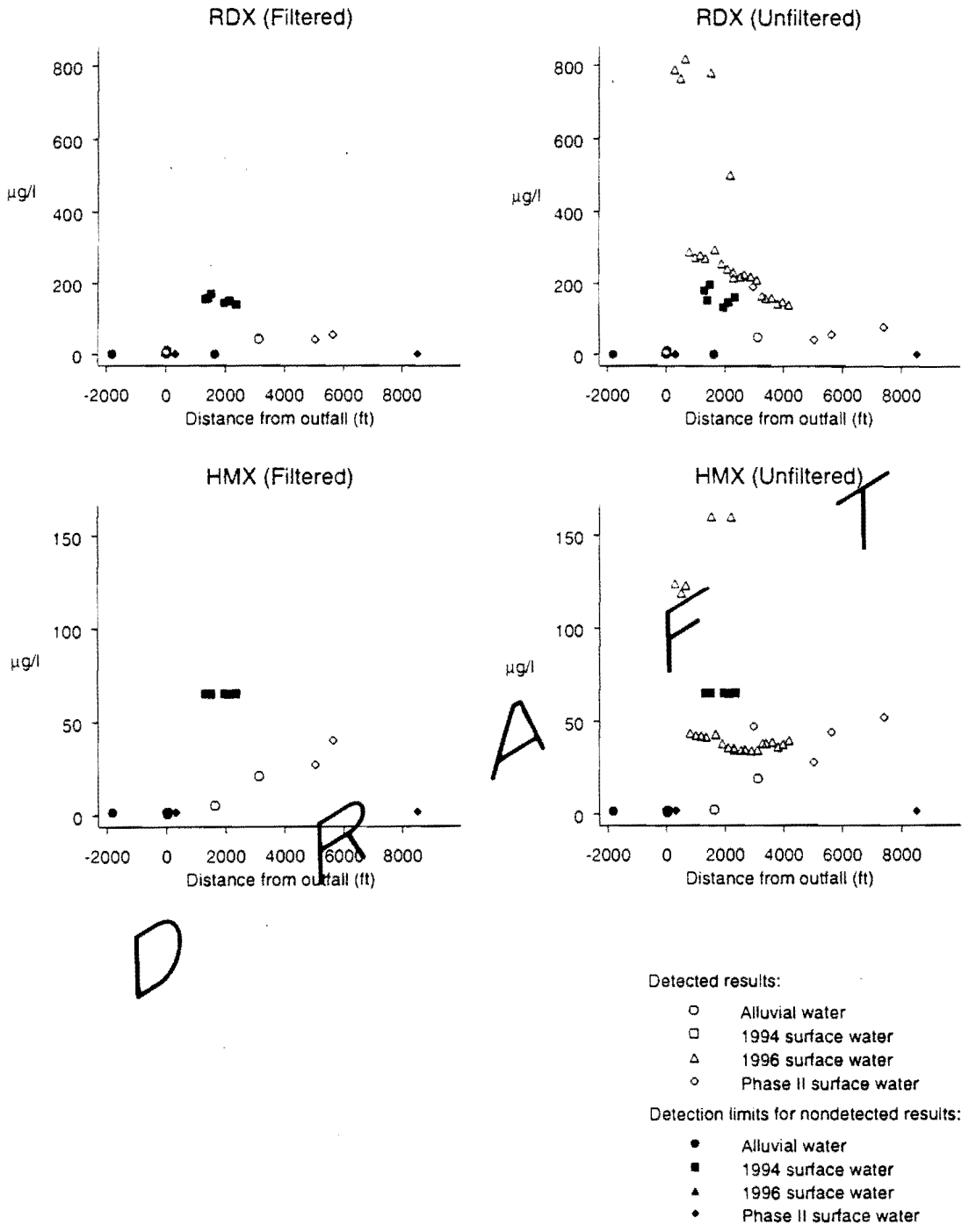

Figure 3.4-10(d). RDX and HMX in water compared with distance from TA-16-260 outfall

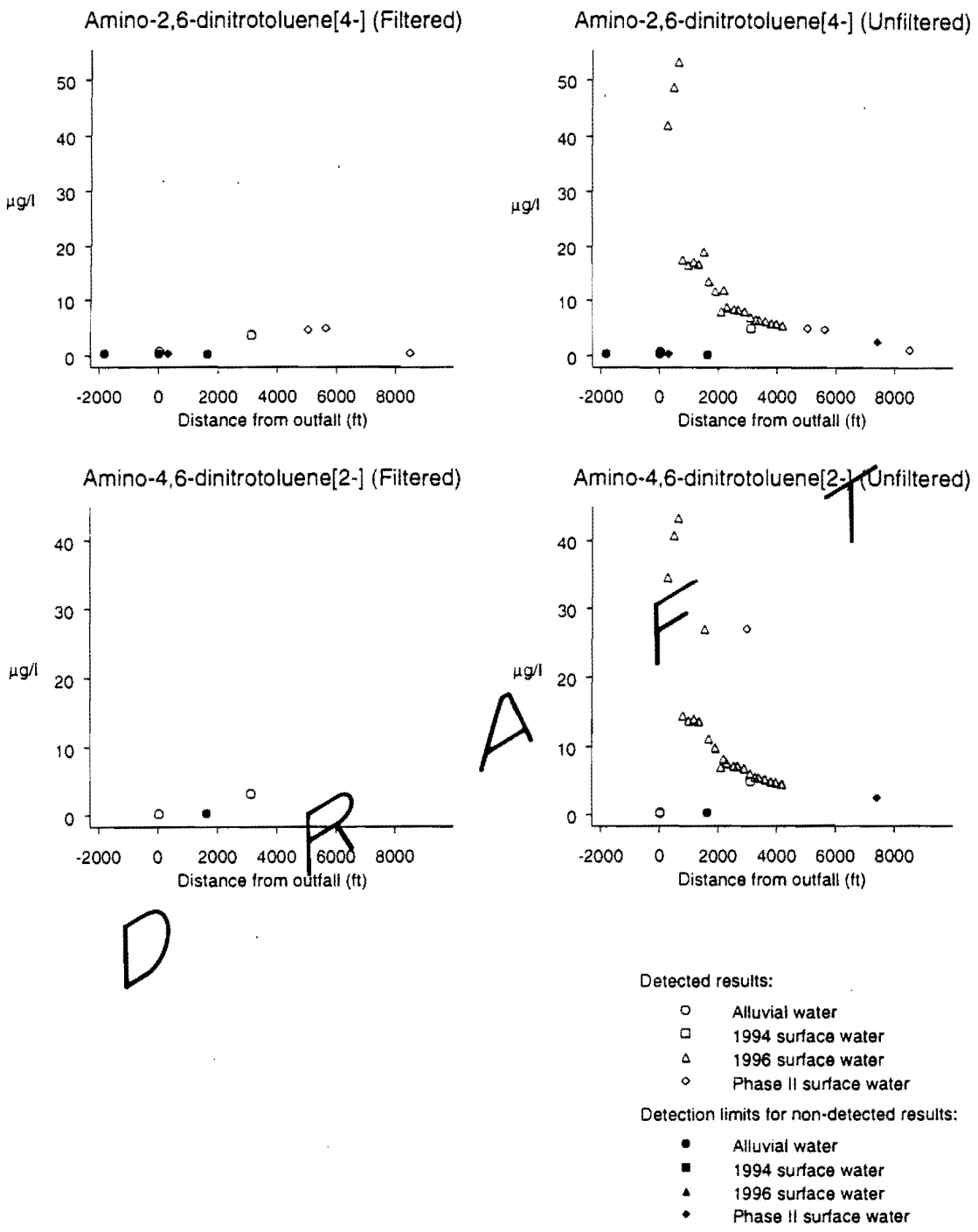

Figure 3.4-10(e). Amino-2,6-dinitrotoluene[4-] and amino-4,6-dinitrotoluene[2-] in water compared with distance from TA-16-260 outfall

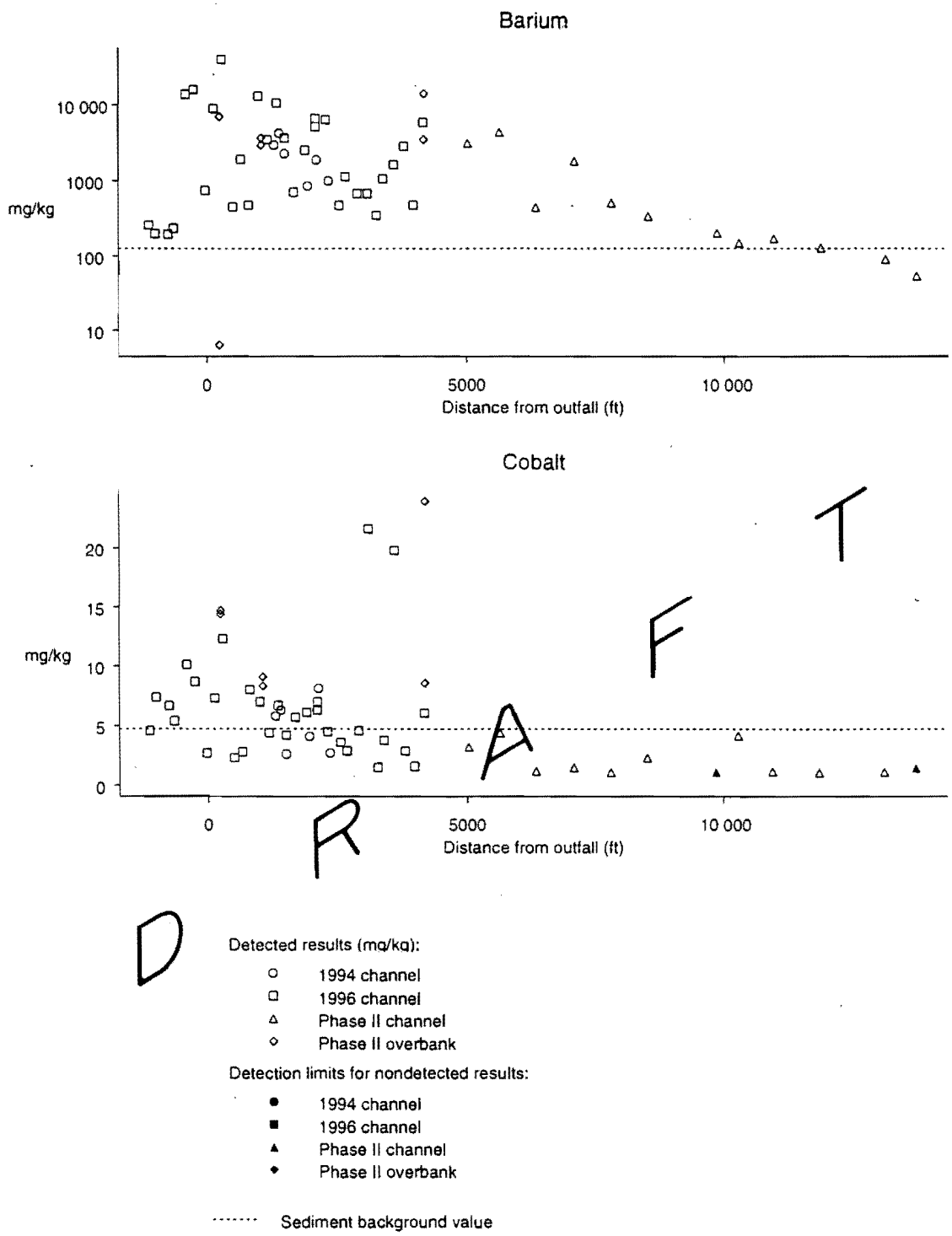

Figure 3.4-4(a). Trend plots of barium and cobalt in Cañon de Valle sediments

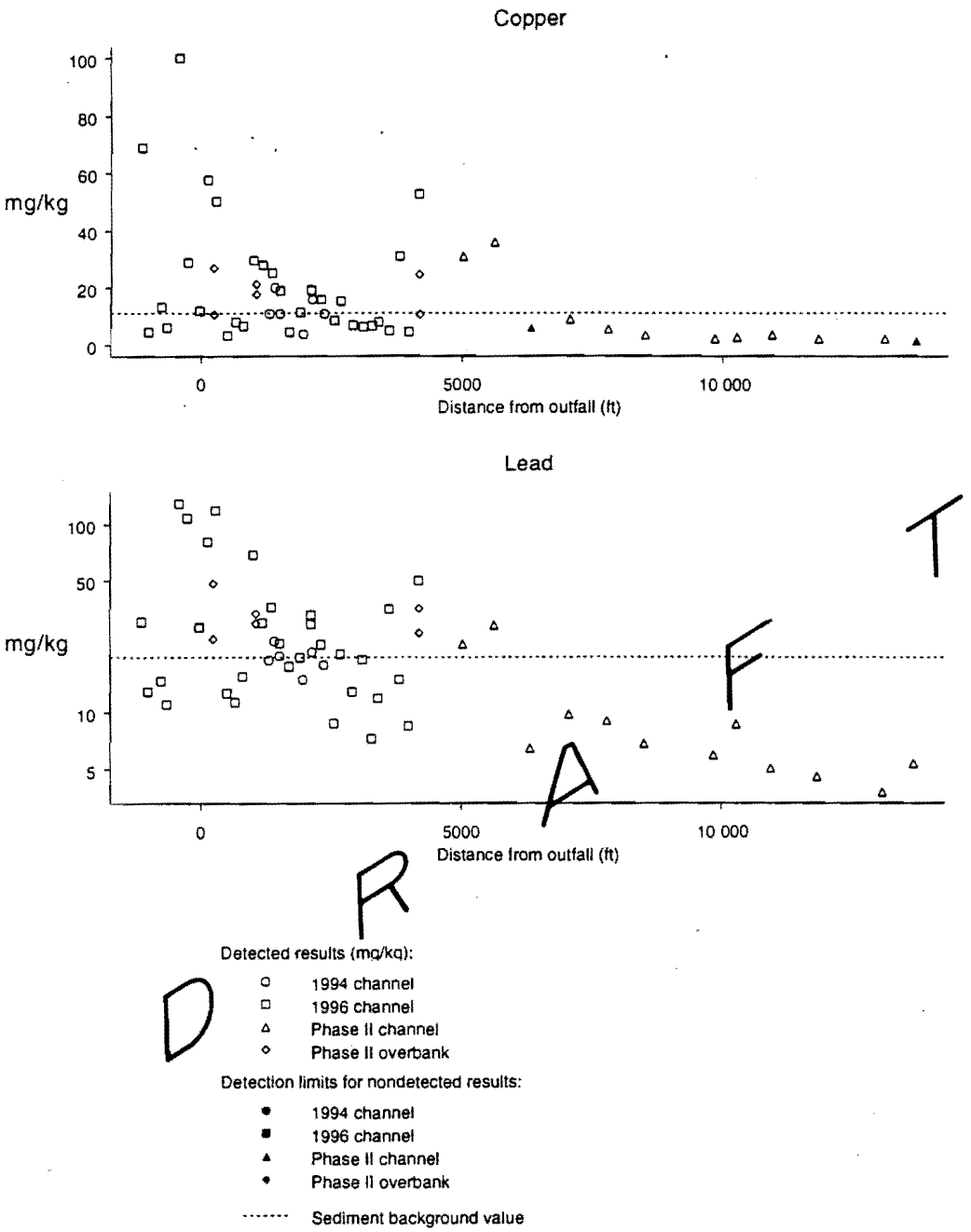

DRAFT

Figure 3.4-4(b). Trend plots of copper and lead in Cañon de Valle sediments

DRAFT

ATTACHMENT D

SITE LOCATIONS FOR GROUNDWATER WELLS

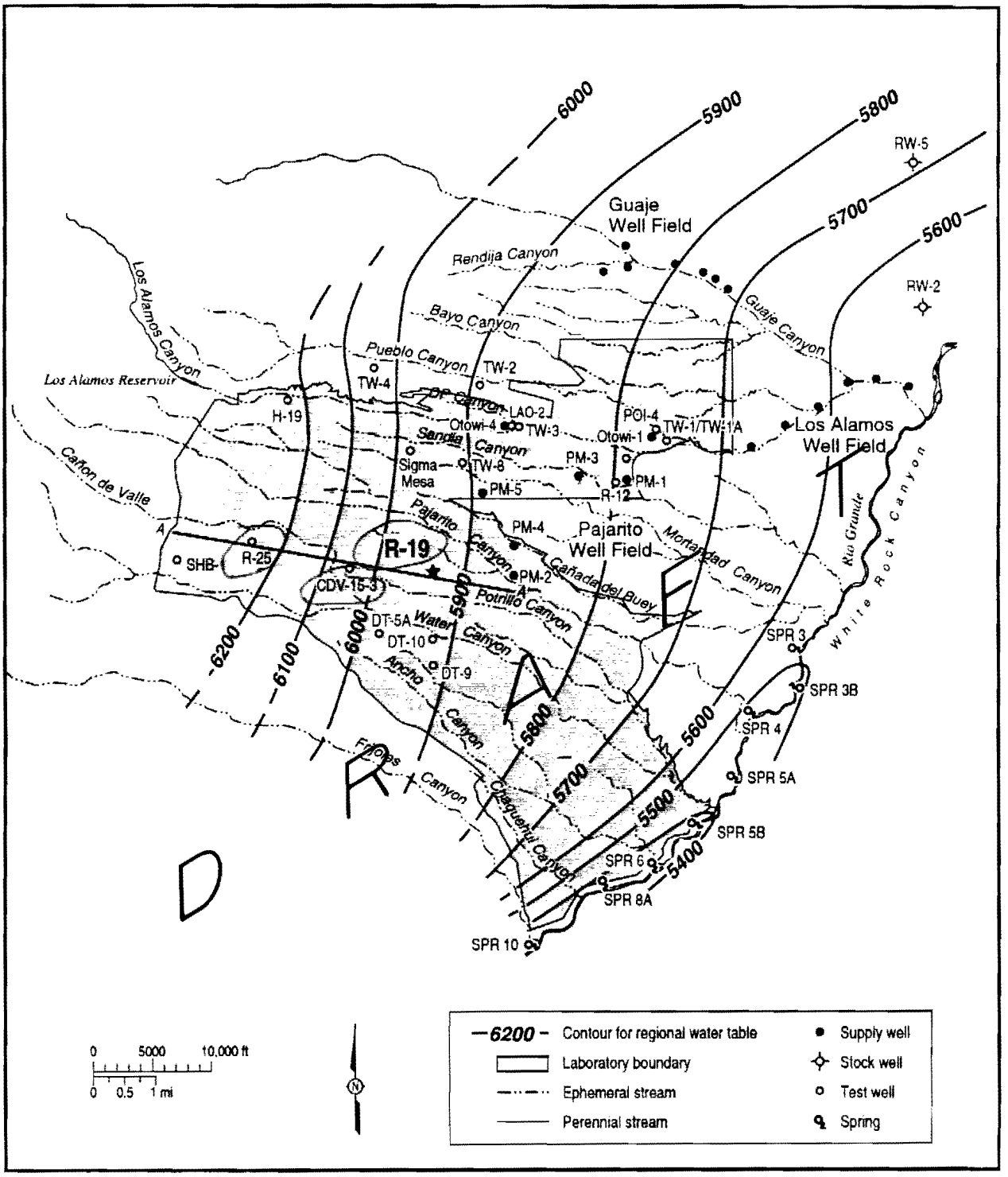
6000
5900
5800
5700
5600
5500
5400
6200
6100
RW-5
RW-2
Guaje Well Field
Rendija Canyon
Bayo Canyon
Guaje Canyon
Los Alamos Canyon
Los Alamos Reservoir
Pueblo Canyon
TW-2
TW-4
DP Canyon
LAO-2
H-19
Otowi-4
TW-3
POI-4
Otowi-1
TW-1/TW-1A
Los Alamos Well Field
Sandia Canyon
Sigma Mesa
TW-8
PM-3
PM-1
PM-5
R-12
Cañon de Valle
Pajarito Canyon
PM-4
Pajarito Well Field
Mortandad Canyon
R-19
R-25
SHB
PM-2
Cañada del Buey
Potrillo Canyon
CDV-15-3
DT-5A
Water Canyon
DT-10
DT-9
Ancho Canyon
Rio Grande
White Rock Canyon
SPR 3
SPR 3B
SPR 4
SPR 5A
SPR 5B
SPR 6
SPR 8A
SPR 10
Frijoles Canyon
Chaquehui Canyon
A
A'
0 5000 10,000 ft
0 0.5 1 mi
N
6200 Contour for regional water table
Laboratory boundary
Ephemeral stream
Perennial stream
Supply well
Stock well
Test well
Spring

ATTACHMENT E

SURFACE SOIL SAMPLE RESULTS FOR THE TA-16 BURN GROUND AREA

Source: Unpublished Data.

DRAFT

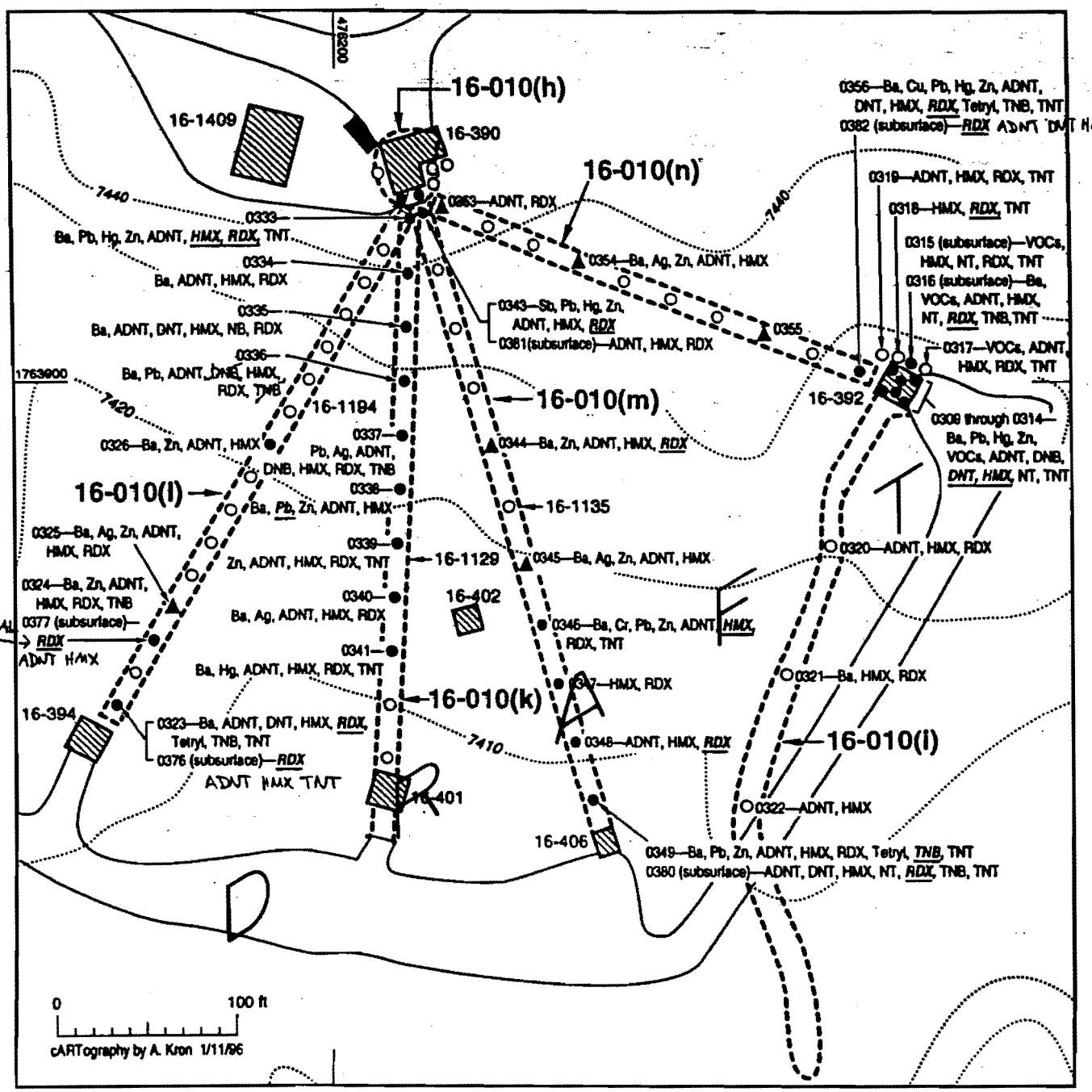

Permanent structure

Temporary structure

Paved road

PRS boundary

Contour interval = 10 ft

○ HE screening sample (no elevated levels found)

● HE analytical sample (elevated HE levels found)

▲ Analytical sample (elevated barium levels found)

0323 Sample number (all samples collected at surface except where otherwise noted). Note: all sample numbers have prefix 0316-95-
Analytes listed exceed background levels. Analytes in bold italic face and underlined exceed SALs.

Abbreviations:

Sb—antimony	VOCs—volatile organic compounds
Ba—barium	ADNT—2-amino-4,6-dinitrotoluene and 4-amino-2,6-dinitrotoluene
Cr—chromium	
Cu—copper	DNB—1,3-dinitrobenzene
Ni—nickel	DNT—2,4-dinitrotoluene and 2,6-dinitrotoluene
Pb—lead	HMX—cyclotetramethylenetetranitramine
Hg—mercury	NB—nitrobenzene
Ag—silver	RDX—cyclonite
Zn—zinc	TNB—1,3,5-tinitrobenzene
	TNT-2,4,6-tinitrotoluene

Sampling locations for PRSs 16-010(i, k, l, m, n).

16-010(h) Table (Inorganics)

SAMPLE ID	DEPTH (ft)	BARIUM (mg/kg)	LEAD (mg/kg)	MERCURY (mg/kg)	ZINC (mg/kg)
LANL UTL	N/A	315	23.3	0.1	50.8
SAL	N/A	5340	400	23	23,004
0316-95-0303	0-0.5	196	800	<0.053	1070
0316-95-0304	sub	42	51.1	<0.05	115
0316-95-0305	0-0.5	80.5	12.1	<0.054	46.7
0316-95-0306	sub	75.3	12.3	<0.054	47.1
0316-95-0307	0-0.5	121	44.2	0.058	96.7
0316-95-0308	sub	35.8	8.48	<0.06	53.9

Bold indicates values above SAL.

SWMU 16-010(h) TABLE 5.1.6-1

SAMPLE ID	DEPTH (ft)	2-Amino-4,6-dinitrotoluene (mg/kg)	4-Amino-2,6-dinitrotolene (mg/kg)	2,4-Dinitrotoluene (mg/kg)	HMX (mg/kg)	Nitrobenzene (mg/kg)	RDX (mg/kg)	1,3,5-Trinitrobenzene (mg/kg)	2,4,6-Trinitrotoluene (mg/kg)
SAL	N/A	NC	NC	0.65	3259	32.6	4.0	3.3	48.4
0316-95-0303	0-0.5	<0.077	<0.091	<0.057	0.623	<0.091	0.178	<0.085	<0.084
0316-95-0305	0-0.5	0.658	0.447	0.083	727	0.199	1250	0.143	0.123
0316-95-0306	sub	<0.082	<0.085	<0.057	18.3	<0.091	189	<0.093	<0.09
0316-95-0307	0-0.5	0.169	0.214	0.233	732	<0.091	124	<0.093	3.37
0316-95-0308	sub	0.172	0.138	<0.057	37.1	<0.09	65.1	<0.092	<0.089

16-010(i) Table (Inorganics)												
SAMPLE ID	DEPTH (ft)	BARIUM (mg/kg)	LEAD (mg/kg)	MERCURY (mg/kg)	ZINC (mg/kg)							
LANL UTL	N/A	315	23.3	0.1	50.9							
SAL	N/A	5340	400	23	23,004							
0316-95-0309	0-0.5	345	45.5	<0.044	23.3							
0316-95-0310	sub	831	54.7	0.065	39.4							
0316-95-0311	0-0.5	291	19.1	0.173	28.8							
0316-95-0312	sub	339	32.4	0.188	27.7							
0316-95-0313	0-0.5	880	46.8	0.331	118							
0316-95-0314	sub	652	14.4	0.087	48.5							
0316-95-0316	1.6	571	12.1	<0.049	36.7							
0316-95-0321	0-0.5	318	7.9	<0.052	25.4							
Bold indicates values above SAL.												

SWMU 16-010(i) HE

SAMPLE ID	DEPTH (ft)	2-Amino-4,6-dinitrotoluene (mg/kg)	4-Amino-2,6-dinitrotolene (mg/kg)	1,3-Dinitrobenzene (mg/kg)	2,4-Dinitrotoluene (mg/kg)	HMX (mg/kg)	2-Nitrotoluene (mg/kg)	3-Nitrotoluene (mg/kg)	4-Nitrotoluene (mg/kg)	RDX (mg/kg)	1,3,5-Trinitrobenzene (mg/kg)	2,4,6-Trinitrotoluene (mg/kg)
SAL	N/A	NC	NC	6.52	0.65	3250	652.0	652.0	652.0	4.0	3.3	48.4
0316-95-0309	0-0.5	2.32	1.87	0.09	0.348	764	0.434	<0.158	<0.19	39.2	0.095	1.53
0316-95-0310	sub	3.02	2.2.4	0.111	0.318	339	0.694	<0.158	0.255	58.7	0.353	24
0316-95-0311	0-0.5	7.14	5.83	<0.064	0.651	77.7	<0.157	<0.156	<0.187	5.75	0.105	35.1
0316-95-0312	sub	19.9	14.7	<0.064	3.02	152	0.248	<0.155	<0.187	19.2	0.241	63.3
0316-95-0313	0-0.5	4.07	4.01	0.208	0.857	4830	1.56	<0.165	4.51	10700	0.791	230
0316-95-0314	sub	2.28	<0.086	0.102	0.635	2610	3.03	<0.157	<0.189	8160	1.03	2060
0316-95-0315	1.1	<0.091	<0.094	<0.071	<0.063	8.05	2.87	1.1	<0.207	3.32	<0.103	0.241
0316-95-0316	1.6	2.1	3.66	<0.069	<0.062	64.8	0.351	<0.167	0.947	23	0.217	4.06
0316-95-0317	1.1	<0.076	0.104	<0.068	<0.056	42.4	<0.155	<0.154	<0.185	1.31	<0.084	0.101
0316-95-0318	1.1	<0.077	<0.092	<0.069	<0.057	5.3	<0.156	<0.155	<0.187	10.6	<0.085	1.02
0316-95-0319	0-0.5	0.102	0.115	<0.068	<0.057	1.73	<0.155	<0.154	<0.185	2.3	<0.084	0.142
0316-95-0320	0-0.5	0.211	0.167	<0.075	<0.067	0.273	<0.184	<0.183	<0.22	0.216	<0.011	<0.106
0316-95-0321	0-0.5	<0.077	<0.091	<0.069	<0.065	0.435	<0.156	<0.154	<0.186	2.14	<0.084	<0.09
0316-95-0322	0-0.5	<0.094	0.125	<0.073	<0.057	0.35	<0.178	<0.177	<0.213	<0.2	<0.106	<0.103

SWMU 16-010(i) VOLATILES												
SAMPLE ID	DEPTH (ft)	ACETONE (mg/kg)	P-ISOPROPYLTOLUENE (mg/kg)	METHYLENE CHLORIDE (mg/kg)	TRICHLOROFLUORO METHANE (mg/kg)	TOLUENE (mg/kg)						
SAL	N/A	2000	NC	11	710	1,900						
0316-95-0314	sub	0.014	<0.005	<0.005	<0.005	0.017						
0316-95-0315	0-0.5	0.014	0.022	<0.0055	<0.0055	<0.0055						
0316-95-0316	1.6	<0.0011	0.012	<0.0054	<0.0054	<0.0055						
0316-95-0317	1.1	<0.001	<0.0052	0.063	0.013	<0.0052						

DRAFT

16-010(k) Table (Inorganics)

SAMPLE ID	DEPTH (ft)	BARIUM (mg/kg)	LEAD (mg/kg)	MERCURY (mg/kg)	SILVER (mg/kg)	ZINC (mg/kg)
LANL UTL	N/A	315	23.3	0.1	not available	50.8
SAL	N/A	5340	400	23	383	23,004
0316-95-0333	0-0.5	1 820	169	0.295	<0.578	63.7
0316-95-0334	0-0.5	480	17.4	<0.054	<0.536	28.1
0316-95-0335	0-0.5	633	15	0.058	<0.547	34
0316-95-0336	0-0.5	456	49.4	0.058	<0.53	20.6
0316-95-0337	0-0.5	289	85.7	<0.053	0.52	43.1
0316-95-0338	0-0.5	401	489	<0.051	<0.507	71.4
0316-95-0339	0-0.5	301	14.3	<0.054	<0.522	54.6
0316-95-0340	0-0.5	610	10.7	<0.06	0.89	44.9
0316-95-0341	0-0.5	337	8.81	0.122	<0.537	37
0316-95-0378	1-1.5	76.1	4.51	<0.06	<0.6	33.5
0316-95-0379	0-0.5	126	5.31	<0.059	<0.582	32.7
0316-95-2018	1-1.5	73.5	6.38	<0.058	<0.579	41.1

Bold indicates values above SAL.

SWMU 16-010(k) TABLE 5.1.6-1

SAMPLE ID	DEPTH (ft)	2-Amino-4,6-dinitrotoluene (mg/kg)	4-Amino-2,6-dinitrotolene (mg/kg)	1,3-Dinitrobenzene (mg/kg)	2,4-Dinitrotoluene (mg/kg)	2,6-Dinitrotoluene (mg/kg)	HMX (mg/kg)	Nitrobenzene (mg/kg)	RDX (mg/kg)	1,3,5-Trinitrobenzene (mg/kg)	2,4,6-Trinitrotoluene (mg/kg)
SAL	N/A	NC	NC	6.52	0.65	0.65	3259	32.6	4.0	3.3	48.4
0316-95-0333	0-0.5	1.29	0.882	<0.407	<0.337	<0.475	**12100**	<0.537	**6.93**	<0.501	0.848
0316-95-0334	0-0.5	0.155	0.159	<0.074	<0.061	<0.086	2.84	<0.098	0.96	<0.091	<0.097
0316-95-0335	0-0.5	0.544	0.266	<0.077	<0.064	0.121	91.3	0.464	0.621	<0.095	<0.101
0316-95-0336	0-0.5	0.134	0.142	<0.076	<0.063	<0.089	78.6	<0.101	0.887	<0.094	<0.1
0316-95-0337	0-0.5	0.453	0.416	0.221	<0.061	<0.085	588	<0.096	1.24	0.189	<0.096
0316-95-0338	0-0.5	0.225	0.215	<0.070	<0.058	<0.082	6.95	<0.093	<0.179	<0.087	<0.092
0316-95-0339	0-0.5	1.51	1.07	<0.078	0.066	<0.091	885	<0.103	1.83	<0.096	0.484
0316-95-0340	0-0.5	0.573	0.435	<0.082	<0.068	<0.088	801	<0.108	0.865	<0.1	<0.107
0316-95-0341	0-0.5	0.542	0.584	<0.076	<0.063	<0.095	388	<0.1	0.485	<0.093	0.164
0316-95-0378	1-1.5	<0.077	0.216	<0.069	<0.057	<0.08	116	<0.091	<0.175	<0.085	<0.09
0316-95-0379	0-0.5	0.105	0.13	<0.069	<0.057	<0.08	162	<0.091	0.286	<0.085	<0.09
0316-95-2018	1-1.5	0.52	0.421	<0.069	<0.057	<0.08	69.1	<0.091	<0.175	<0.085	<0.09

16-010(I) Table (inorganics)

SAMPLE ID	DEPTH (ft)	BARIUM (mg/kg)	SILVER (mg/kg)	ZINC (mg/kg)
LANL UTL	N/A	315	NC	50.8
SAL	N/A	5340	383	23,004
0316-95-0323	0-0.5	475	<0.567	33.4
0316-95-0324	0-0.5	387	<0.555	55.1
0316-95-0325	0-0.5	902	1.09	125
0316-95-0326	0-0.5	489	<0.513	86.3
0316-95-0376	2-2.5			
0316-95-0377	3-3.5			

Samples not in FIMAD or hard copy; values < 25% SAL

Bold indicates values above SAL.

SWMU 16-010(I) TABLE 5.1.6-1

SAMPLE ID	DEPTH (ft)	2-Amino-4,6-dinitrotoluene (mg/kg)	4-Amino-2,6-dinitrotolene (mg/kg)	2,4-Dinitrotoluene (mg/kg)	2,6-Dinitrotoluene (mg/kg)	HMX (mg/kg)	RDX (mg/kg)	Tetryl (mg/kg)	1,3,5-Trinitrobenzene (mg/kg)	2,4,6-Trinitrotoluene (mg/kg)
SAL	N/A	NC	NC	0.65	3259	3259	4.0	NC	3.3	48.4
0316-95-0323	0-0.5	21.7	15.2	0.481	0.178	259	2540	0.321	0.421	23
0316-95-0324	0-0.5	0.465	0.295	<0.062	<0.088	1	0.476	<0.103	0.123	<0.099
0316-95-0325	0-0.5	1.07	0.789	<0.057	<0.08	352	2.38	<0.093	<0.084	<0.089
0316-95-0326	0-0.5	0.081	<0.091	<0.057	<0.08	0.176	<0.174	<0.093	<0.084	<0.089
0316-95-0376	2-2.5	2.61	2.05	<0.065	<0.092	45.7	594	<0.114	<0.113	30.9
0316-95-0377	3-3.5	0.425	0.267	<0.078	<0.11	20.2	2.29	<0.137	<0.135	<0.123

16-010(m) Table (inorganics)										
SAMPLE ID	DEPTH (ft)	ANTIMONY (mg/kg)	BARIUM (mg/kg)	CHROMIUM (mg/kg)	LEAD (mg/kg)	MERCURY (mg/kg)	SILVER (mg/kg)	ZINC (mg/kg)		
LANL UTL	N/A	1	315	19.3	23.3	0.1	NC	50.8		
SAL	N/A	30.7	5340	211	400	23	383	23,004		
0316-95-0343	0-0.5	12.1	273	3.85	102	0.154	<0.561	76.6		
0316-95-0344		<1.07	380	5.39	9.3	<0.05	<0.534	53.4		
0316-95-0345	0-0.5	<1.07	577	6.85	9.97	<0.051	0.735	106		
0316-95-0346		<5.69	316	25.6	192	<0.057	<0.569	66.1		
0316-95-0347	0-0.5	<5.59	188	3.03	16.9	<0.058	<0.559	25.2		
0316-95-0348		<5.63	272	3.58	9.34	<0.056	<0.563	30.8		
0316-95-0349	1.6	<5.25	545	11.7	87.6	0.062	<0.559	120		
0316-95-0380	0-0.5	<6.02	241	9.2	46.8	<0.06	<0.602	39.4		
0316-95-0381	1.6	<6.05	44.9	2.28	31.3	<0.059	<0.605	37.8		
0316-95-2019	0-0.5	<1.23	212	8.88	16.1	0.106	<0.598	56.7		
Bold indicates values above SAL.										
SWMU 16-010(m) TABLE 5.1.6-1										
SAMPLE ID	DEPTH (ft)	2-Amino-4,6-dinitrotoluene (mg/kg)	4-Amino-2,6-dinitrotolene (mg/kg)	2,4-Dinitrotoluene (mg/kg)	HMX (mg/kg)	2-Nitrotoluene (mg/kg)	RDX (mg/kg)	Tetryl (mg/kg)	1,3,5-Trinitrobenzene (mg/kg)	2,4,6-Trinitrotoluene (mg/kg)
SAL	N/A	NC	NC	0.65	3259	652.0	4.0	NC	3.3	48.4
0316-95-0343	0-0.5	0.433	0.427	<0.068	2420	<0.185	**27.8**	<0.111	<0.101	<0.107
0316-95-0344		0.457	0.247	<0.057	8.34	<0.155	**2050**	<0.093	<0.084	<0.089
0316-95-0345	0-0.5	0.649	0.315	<0.057	5.6	<0.155	<0.174	<0.093	<0.084	<0.089
0316-95-0346		1.18	1.14	<0.334	**18700**	<0.914	0.39	<0.55	<0.496	1.74
0316-95-0347	0-0.5	<0.088	<0.104	<0.065	0.905	<0.178	0.404	<0.107	<0.096	<0.102
0316-95-0348		0.131	0.17	<0.064	1630	<0.175	**40.7**	<0.105	<0.095	<0.101
0316-95-0349	1.1	2.99	2.44	<0.064	603	<0.176	2.3	0.262	**3.36**	22.9
0316-95-0380	1.6	1.8	1.7	0.117	204	0.634	**3170**	<0.099	0.128	37.3
0316-95-0381	1.1	<0.082	0.086	<0.057	205	<0.155	3.03	<0.099	<0.092	<0.089
0316-95-2019	1.1	1.8	1.76	<0.057	153	<0.156	**2160**	0.154	1.08	**59.5**

16-010(n) Table (inorganics)									
SAMPLE ID	DEPTH (ft)	BARIUM (mg/kg)	COPPER (mg/kg)	LEAD (mg/kg)	MERCURY (mg/kg)	SILVER (mg/kg)	ZINC (mg/kg)		
LANL UTL	N/A	315	19.3	23.3	0.1	NC	50.8		
SAL	N/A	5340	211	400	23	383	23,004		
0316-95-0354	0-0.5	494	8.01	19.1	<0.053	0.536	162		
0316-95-0356	0-0.5	545	35	87.6	0.573	<0.525	166		
0316-95-0382	0.7-1.1								
Sample results not in FIMAD or hard copy; no values > SAL									
Bold indicates values above SAL.									
SWMU 16-010(n) TABLE 5.1.6-1									
SAMPLE ID	DEPTH (ft)	2-Amino-4,6-dinitrotoluene (mg/kg)	4-Amino-2,6-dinitrotolene (mg/kg)	2,4-Dinitrotoluene (mg/kg)	HMX (mg/kg)	RDX (mg/kg)	Tetryl (mg/kg)	1,3,5-Trinitrobenzene (mg/kg)	2,4,6-Trinitrotoluene (mg/kg)
SAL	N/A	NC	NC	0.65	3259	4.0	NC	3.3	48.4
0316-95-0353	0-0.5	0.251	0.271	<0.056	<0.165	0.955	<0.093	<0.084	<0.089
0316-95-0354	0-0.5	<0.078	0.094	<0.057	0.321	<0.176	<0.095	<0.085	<0.091
0316-95-0356	0-0.5	1.55	1.56	0.116	1890	4980	0.275	0.097	3.66
0316-95-0382	0.7-1.1	1.07	0.985	0.075	748	2430	<0.112	<0.111	2.83

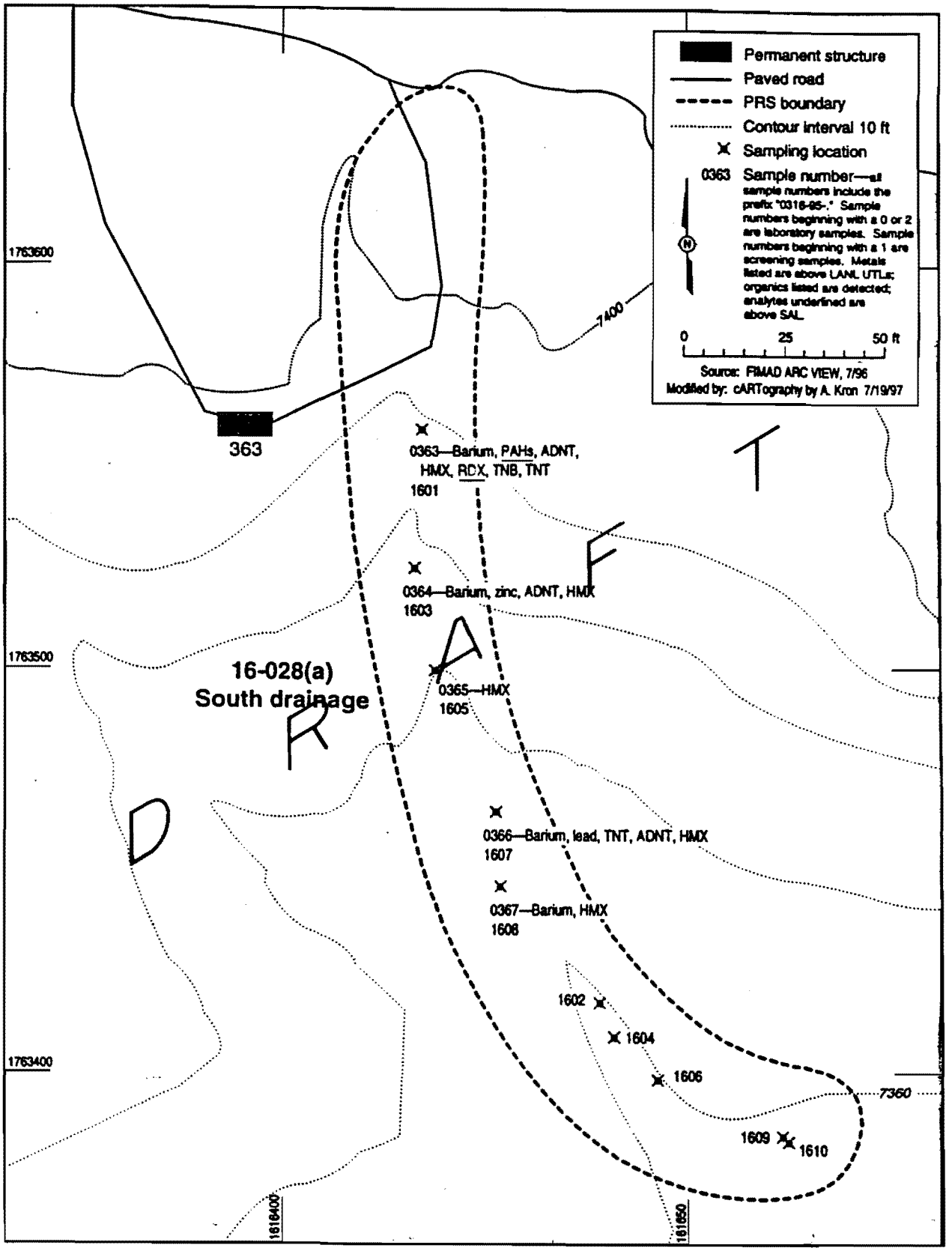

Sample locations at PRS 16-028(a).

5.14.5 Evaluation of Inorganic Chemicals

Table 5.14.5-1 shows the metals present at levels above UTLs. Barium, a component of many explosives, was above its UTL but well below its SAL.

TABLE 5.14.5-1

INORGANICS WITH CONCENTRATIONS GREATER THAN BACKGROUND UTLs FOR PRS 16-028(a)

SAMPLE ID	DEPTH (ft)	BARIUM (mg/kg)	LEAD (mg/kg)	ZINC (mg/kg)
LANL UTL (all soil)	N/A	315	23.3	50.8
SAL	N/A	5 300	400	23 000
0316-95-0363	0-0.5	321	7.9	35.1 (P)
0316-95-0364	0-0.5	588	5.5	170 (P)
0316-95-0366	0-0.5	501	76.6	37.8 (P)
0316-95-0367	0-0.5	368	6.3	30.1 (P)

5.14.6 Evaluation of Radionuclides

Radionuclides were not present at levels above UTLs at this PRS.

5.14.7 Evaluation of Organic Chemicals

PAHs were found at levels less than 0.3 mg/kg in one sample (Table 5.14.7-1). All the PAH data were qualified as being estimated concentrations. Benzo(a)pyrene was present at a level slightly greater than its SAL. No other PAHs were above SALs.

TABLE 5.14.7-1

PRS 16-028(a) SOIL CONCENTRATIONS FOR DETECTED ORGANIC ANALYTES

SAMPLE ID	DEPTH (ft)	ANTHRACENE (mg/kg)	BENZO(a) ANTHRACENE (mg/kg)	BENZO(a) PYRENE (mg/kg)	BENZO(b) FLUORANTHENE (mg/kg)	BENZO(k) FLUORANTHENE (mg/kg)	CHRYSENE (mg/kg)	FLUORANTHENE (mg/kg)	PHENANTHRENE (mg/kg)	PYRENE (mg/kg)
SAL	N/A	18 000	0.61	0.061	0.61	6.1	61	2 600	NC	19 000
EQL	N/A	0.33	0.33	0.33	0.33	0.33	0.33	0.33	0.33	0.33
0316-95-0363	0-0.5	0.042 (J)	0.095 (J)	0.09 (J)	0.11 (J)	0.056 (J)	0.11 (J)	0.26 (J)	0.2 (J)	0.22 (J)

HE was found in a number of samples. Table 5.14.7-2 presents the analytical results for samples containing HE. Only sample 0316-95-0363 contained HE (RDX only) at a levels above SAL. All other samples showed that HE contamination dropped off significantly with distance from the burning ground, with only very low levels of HMX detected at the farthest downgradient point.

TABLE 5.14.7-2

PRS 16-028(a) SOIL CONCENTRATIONS FOR DETECTED HE ANALYTES

SAMPLE ID	DEPTH (ft)	2-ADNT (mg/kg)	4-ADNT (mg/kg)	HMX (mg/kg)	RDX (mg/kg)	1,3,5-TNB (mg/kg)	TNT (mg/kg)
SAL	N/A	NC	NC	3 300	4	3.3	15
EQL	N/A	0.26	ND	2.2	1	0.25	0.25
0316-95-0363	0-0.5	0.093	0.097	8.22	5.33	2.33	0.139
0316-95-0364	0-0.5	0.081 (U)	0.12	1.04	0.174 (U)	0.092 (U)	0.089 (U)
0316-95-0365	0-0.5	0.081 (U)	0.084 (U)	0.34	0.174 (U)	0.092 (U)	0.089 (U)
0316-95-0366	0-0.5	0.171	0.247	0.644	0.175 (U)	0.093 (U)	0.301
0316-95-0367	0-0.5	0.081 (U)	0.084 (U)	0.432	0.174 (U)	0.092 (U)	0.089 (U)

5.14.8 Risk-Based Screening Assessment

Three inorganic and two organic chemicals were carried forward from the background comparison and organic constituent evaluation. As described in Chapter 3 of this report, analytes are divided into three classes for the screening assessment (noncarcinogens, carcinogens, and radionuclides), depending on which toxicological effect forms the basis of their SAL. This separation is required to evaluate possible additive effects within each class of chemical.

RDX and Benzo(a)pyrene exceed their SALs in only one sample. These two constituents will be retained as COPCs for further evaluation. Sample results that exceeded SAL values are highlighted in black squares in the previous tables.

An MCE calculation was performed using the sum of the maximum concentrations at this PRS. The MCE results for noncarcinogens and chemical carcinogens 1.0 and 0.2, respectively. The MCE value for noncarcinogenic compounds is greater than unity; therefore, a potential human health risk based on additive effects has been identified for this class of chemicals. The noncarcinogenic COPCs that have a normalized value of more than 0.1 in the MCE at this PRS are barium, lead, and 1,3,5-Trinitrobenzene. These compounds are, therefore, retained as COPCs for further evaluation. The MCE value for carcinogenic compounds is less than the target value of 1, indicating that multiple constituents are not present at levels that pose a risk when combined. The MCE calculations are presented in Table 5.14.8-1.

ATTACHMENT F

ROUTES AND PATHWAYS OF EXPOSURE FOR THE TA-16 BURN GROUND AREA

DRAFT

ATTACHMENT F
ROUTES AND PATHWAYS OF EXPOSURE

There are two populations that could potentially receive exposures from waste or residuals managed at the Technical Area 16 (TA-16) Burn Ground Unit: 1) the on-site workers and environment and 2) the off-site public and environment. They could be impacted through three routes of exposure:

- dermal (skin or other covering),
- ingestion (eating or drinking), and
- inhalation (breathing).

Although typical pathways include air, soil, and water, the only realistic pathway for ongoing operations at the TA-16 Burn Ground Unit is air, as discussed below. Legacy contamination from past uses of the area is being addressed through the Resource Conservation and Recovery Act corrective action process, which will include a formal risk assessment.

Dermal Exposure

Dermal exposure occurs when chemicals directly contact an organism's skin or other covering. This route is potentially important for workers because they can be exposed when they handle wastes or residues. The Occupational Safety and Health Administration (OSHA) is the Federal agency responsible for protecting workers. OSHA requires that three types of controls be considered: protective equipment, administrative controls, and engineering controls. Protective equipment and administrative controls are the primary controls for worker protection at the TA-16 Burn Ground Unit. Engineering controls are used to prevent migration of wastes and residues from the burn structures to the environment.

Workers at the TA-16 Burn Ground Unit are required to wear protective equipment when handling waste or residues. The type and level of protective equipment are chemical and hazard specific. Typically, for a low hazard waste, coveralls, safety glasses, gloves, and steel-toed shoes or boots are worn. For a higher hazard waste, goggles, face shields, respirators, rubber aprons, or other protective clothing are donned, as needed. This required use of protective equipment prevents any direct contact with waste, eliminating dermal exposure as an important route of exposure for workers.

Administrative controls also protect workers from all routes of exposure. Wastes are typically handled in small amounts for safety purposes. For instance, the maximum amount of solvent that can be treated at the TA-16-388 Burn Tray is 75 gallons, but this waste type is usually burned in batches of 5 gallons to maximize worker safety and minimize exposure. Workers leave the area as soon as the waste is staged and occupy a protective shelter (the TA-16-389 Control Building) during burning. The Control Building is located a minimum of 300 feet from the nearest burn structure. Burns are ignited remotely from this shelter and workers observe the burns by remote cameras. They may not approach the burn structure until they can visually verify the destruction of high explosives (HE) or determine by thermocouple readouts that HE has been completely decomposed.

The dermal route becomes important for the on-site environment and off-site public and environment only if the pathways are contaminated and contaminants are transported away

from the TA-16 Burn Ground Unit to receptors. The remote location of the unit decreases this risk; only a major spill that could not be cleaned up quickly could potentially migrate off the unit. The release potential is managed by minimizing the amounts of wastes handled. In the event of a spill, solid HE would contact the soil surface and would be removed immediately. While 1,000 pounds are allowed, it is rare that this amount is handled at one time; burns more typically involve less than 100 pounds of explosive. Large pieces of HE-contaminated equipment (e.g., a lathe or an HE oven) may be handled, but these have low levels of contamination and are easily retrieved if dropped. Solids and liquids are handled in separate structures of the TA-16 Burn Ground Unit; thus, there is no opportunity for them to commingle and be transported in a liquid waste stream.

Engineering controls have been installed at the burn structures to prevent migration of wastes or residues into the environment. They primarily include precipitation covers and secondary containment for the burn structures. The precipitation covers are used as follows:

- **TA-16-399 HE Burn Tray:** The TA-16-399 HE Burn Tray is always covered between burns, unless an ash sample is being taken, ash is being removed, or HE is being staged. A moveable cover (see Figure H-6 in Attachment A) or tarp may be used.

- **TA-16-388 Flash Pad and Oil/Solvent Burn Tray:** This structure is intended to be covered between burns unless sampling, ash removal, or waste staging requires that the cover be moved. Two types of covers may be used. One type is a large retractable cover (see Figures H-4 and H-5 in Attachment A); the second includes tarps or other types of covers (e.g., a removable cover similar to that used at the TA-16-399 HE Burn Tray).

- **TA-16-401, -406 Sand Filters:** Precipitation on the TA-16-401 and –406 Sand Filters are not a concern because any water falling on the filters will be treated at the High Explosives Wastewater Treatment Facility (HEWTF). These structures are left open during periods when wastewater is being filtered. They are covered (see Figure H-7 in Attachment A) once bulk HE is added so that the material can be dried and burned. The covers are removed after burning for sampling, waste removal, and further wastewater treatment.

Secondary containment is provided for the TA-16-388 Flash Pad and Oil/Solvent Burn Tray. The secondary containment for the flash pad is designed to prevent any downward or lateral migration of potential leakage from/through the concrete pad. The base of the flash pad is 12 inches thick with integrally poured 8-inch-thick walls. The entire flash pad is contained in a 45 mil Hypalon liner (6 inches below the bottom of the pad and curved up to ground level on all 4 sides, 2 feet out from the pad perimeter). The pad was designed and constructed with a quarter-inch drop/foot towards the back of the pad to contain precipitation in case an unexpected rain event occurs during flashing. For safety purposes, the pad cannot be approached for 8 hours after a burn unless it can be visually confirmed that all HE is destroyed. Water build-up on the pad as a result of precipitation is removed with the HE wastewater (vacuum) truck and treated at the HEWTF. HE-contaminated solvents are burned in a 75-gallon stainless-steel tank, which is surrounded by an 8-foot diameter, 1-foot-high, 375-gallon aluminum secondary containment device. The secondary containment device can contain not only the contents of the 75-gallon tank, but also any unexpected rainfall that might occur during the 8-hour period after a burn that the pad cannot be approached for covering. The containment devices are visually inspected for cracks or other signs of leaking daily during operation or weekly if no operations occur that week.

The combination of having only a small amount of chemicals at risk at any one time, the ability to rapidly respond to spills, and engineered controls ensure that there is no realistic pathway for transport to off-site receptors.

Ingestion

Ingestion may be an important route of exposure if foodstuffs or drinking water becomes contaminated. The contamination may occur from deposition of airborne contaminants, uptake of pollutants from soil by plants, or from contact of pollutants with water. On-site workers are not affected because food and drink may not be consumed in the vicinity of the treatment structures (both an OSHA and U.S. Department of Energy requirement). Crops are not grown on site. The nearest locations where crops may be grown are in gardens in the communities of Los Alamos and White Rock, which are approximately 2.5 and 6 miles away, respectively. Off-site soil and water contamination are not viable pathways for the same reasons discussed under dermal exposure; transport off site is limited by administrative and engineering controls. Small amounts of air pollutants generated during burning could be carried from the site and deposited on foodstuffs and water. This potential release pathway is reviewed and mitigated, if necessary, when air quality standards and burning conditions are set, as described in the following discussion of the inhalation exposure route.

Inhalation

As with the other pathways, OSHA requires workers to be protected from unhealthy exposure to air emissions and publishes occupational exposure standards. Worker exposure is kept below these standards through the use of protective equipment and administrative controls, as described under the dermal route of exposure.

Airborne exposure to the public and environment is regulated by the New Mexico Environment Department's (NMED's) Air Quality Bureau (AQB) under the New Mexico Administrative Code, Title 20, Chapter 2, Part 60, "Open Burning." The NMED's open burning program evaluates the methods of burning and relies on burning under good atmospheric dispersion conditions to minimize hazardous emissions impacts. The AQB requires that a source estimate emissions from the burning of wastes, model impacts, and compare the impacts to Federal and New Mexico primary and secondary air quality standards. Primary standards set limits to protect public health, including the health of "sensitive" populations such as asthmatics, children, and the elderly. Secondary standards set limits to protect public welfare, including protection against decreased visibility and damage to animals, crops, vegetation, and buildings. These standards take into account not only direct impacts from air pollutants but also from deposition of pollutants on the surfaces, uptake into plants, and other indirect impacts. Thus, these standards already account for human health and ecological risks.

Air quality standards are based on short-term (1-, 3-, 8-, or 24-hours) or long-term (monthly or annual) averages of pollutant concentrations. Because burning at the TA-16 Burn Ground Unit is intermittent and is almost always completed within an hour, the short-term averages are more restrictive. This influences the type of model and the input to the models. Depending on the source characteristics, the Laboratory currently uses one of two U.S. Environmental Protection Agency (EPA)-approved Gaussian plume models: SCREEN3 or ISC3.

The basic input parameters required for the models are:

- the source term for each pollutant (emission factors) in pounds per hour;
- type of emission point (area source, volume source, or point source);
- emission point dimensions;
- emission point height above ground;
- gas flow rate out of the emission point;
- emission gas temperature;
- ambient air temperature;
- location, size, and height of adjacent buildings (to account for plume cavitation effects);
- wind speed;
- atmospheric stability (the vertical temperature structure of the atmosphere);
- ceiling (inversion) height (how high above the ground the mixing depth extends);
- receptor distance (the distance from the emission point that impacts are estimated, any distance or array of distances can be specified); and
- receptor height above or below the emission point.

The meteorological information remains constant for modeling impacts from all of the TA-16 Burn Ground Unit structures, but the source term will depend on the types and maximum amounts of material burned at each structure. The physical information for the structures will also vary. Because short-term air quality standards are the most restrictive for this source, "event" rather than "long-term" modeling is performed. The time to complete each burn will vary by structure and the waste being treated, but it is rarely more than an hour. Therefore, only 1- and 3-hour impacts are modeled, unless otherwise requested by the AQB. The models are run in the "rural" mode.

SCREEN3 uses simplified worst-case meteorological input that is designed to overestimate impacts. For instance, actual wind speeds and directions are not input. Instead, the wind is assumed to blow directly toward receptors at a low speed for the entire modeling period. EPA estimates that SCREEN3 overestimates impacts by 110% for 3-hour modeling, 142% for 8-hour modeling, 250% for 24-hour modeling, and 1250% for annual modeling (EPA, 1992). The advantage of using SCREEN3 is that modeling is simple and fast.

If the open burning source shows acceptable impacts with SCREEN3, no further modeling is performed. Otherwise, a more reasonable estimate is made with ISC3. The basic difference between SCREEN3 and ISC3 is that ISC3 uses actual facility wind rose data (wind direction, length of time in that direction, and wind speed).

Model selection and input must be approved by the AQB. The AQB reviews the results of modeling, assures that no standards will be exceeded, and places restrictions on the meteorological conditions under which burning can occur. The AQB and LANL have agreed upon the following restrictions, but they can be changed by the AQB:

- if mean wind speed is projected to be $\geq$ 5 meters per second, a Los Alamos National Laboratory (LANL) meteorologist must be consulted and determine that high wind speeds are not projected later in the day;
- burns must be postponed if wind speeds exceed 10 meters per second;
- burns can occur only when atmospheric stability is A, B, C, or D (conditions under which mixing is quite rapid and concentrations fall off quickly with distance from the source);
- mixing depth must be greater than 200 meters; and
- burns must be conducted between 10 AM and 4 PM, the time of day when dispersion is optimal.

Restrictions may also be placed upon burns if fire danger is high. Fire danger is determined by the local fire department. High fire danger occurs after prolonged dry periods when fuel moisture is very low and fine dead fuels ignite readily. If burning is done during high fire danger periods, special precautions, such as having the fire department stand by, are taken.

A report submitted to the NMED annually summarizes burn location, burn type, burn date, fuel type, and fuel quantity. An estimate of total annual air emissions is also provided.

LANL has minimized the air impacts by both reducing the amount of waste burned and reengineering some structures to burn more effectively and with lower emissions. The biggest source of air emissions in the past was from using wood as the fuel for flashing and for destroying HE in oils and solvents. In 1999, this practice was discontinued and propane was substituted. This change resulted in an order of magnitude reduction of air emissions. Related to the change to propane was that oils and solvents could be burned using propane burners positioned above the waste. This increases the destruction efficiency of vapors. To reduce the amount of waste burned, the Engineering Sciences and Applications Division reviewed its waste streams to determine which could be treated by methods other than burning. This reduced the amount of waste treated by hundreds of pounds a year. Other significant reductions occurred by modifying processes to filter and reuse water contaminated with HE. Pollution prevention is an ongoing program at the Laboratory.

References:

EPA, 1992, "Screening Procedures for Estimating the Air Quality Impact of Stationary Sources, Revised;" U.S. Environmental Protection Agency, Office of Air and Radiation, Office of Air Quality Planning and Standards, Research Triangle Park, North Carolina.

DRAFT