TA-16

National Nuclear Security Administration

DEPARTMENT OF ENERGY
National Nuclear Security Administration
Los Alamos Site Office
Los Alamos, New Mexico 87544

FEB 0 3 2005

CERTIFIED MAIL/RETURN RECEIPT

Mr. John Young
NMED-Hazardous Waste Bureau
2905 Rodeo Park Drive East,
Building 1
Santa Fe, NM 87505-6333

Dear Mr. Young:

Subject: Revised Well R-26 Well Completion Report

Enclosed are two copies of the recently revised Well R-26 Completion Report, which was completed by the Department of Energy. This revision of the report contains an updated version of the Aquifer Test Report and Test Data included in Appendix E. This report replaces the previous completion report submitted to NMED last year. If you have any questions regarding this matter, please feel free to contact me at (505) 665-5046.

Mat Johansen
Groundwater Program Manager

ES:5TW-011

Enclosure

cc w/o enclosure:
B. Enz, OPM, LASO
T. Whitacre, OPM, LASO
T. Taylor, OOM, LASO
C. Nylander, RRES, LANL, MS-J591
J. McCann, RRES, LANL, MS-M992
S Yanicak, NMED-OB, MS-J993

NNSA/DOE
Los Alamos Site Office
528 35th Street
Los Alamos, NM 87544-2201

NNSA/DOE
Headquarters
) Independence Avenue, SW
shington, DC 20585-1290

6527

FINAL
WELL R-26 COMPLETION REPORT
LOS ALAMOS NATIONAL LABORATORY
LOS ALAMOS, NEW MEXICO
PROJECT NO. 37151
Revision No. 1

Prepared for:

The United States Department of Energy and the
National Nuclear Security Administration through the
United States Army Corps of Engineers
Sacramento District

Prepared by:

8300 Jefferson NE, Suite B
Albuquerque, New Mexico 87113

January 25, 2005

TABLE OF CONTENTS

LIST OF ACRONYMS AND ABBREVIATIONS iii
ABSTRACT v
1.0 INTRODUCTION 1
2.0 PRELIMINARY ACTIVITIES 1
2.1 Administrative Preparation 1
2.2 Site Preparation 1
3.0 SUMMARY OF DRILLING ACTIVITIES 3
3.1 Phase I Drilling Activities 4
3.2 Phase II Drilling Activities 7
4.0 SAMPLING AND ANALYSIS OF DRILL CUTTINGS AND GROUNDWATER 9
4.1 Sampling of Drill Cuttings and Core 9
4.2 Sampling of Groundwater 9
5.0 BOREHOLE GEOPHYSICS 10
5.1 KA-Supported Geophysical Logging 10
5.2 Schlumberger Geophysical Logging 11
6.0 LITHOLOGY AND HYDROGEOLOGY 12
6.1 Stratigraphy and Lithologic Logging 13
6.2 Groundwater Occurrence and Characteristics 14
7.0 WELL DESIGN AND CONSTRUCTION 16
7.1 Well Design 16
7.2 Well Construction 16
7.2.1 Steel Installation 18
7.2.2 Annular Fill Placement 18
7.3 Piezometer Construction 19
8.0 WELL DEVELOPMENT AND HYDROLOGIC TESTING 19
8.1 Well Development 21
8.2 Hydrologic Testing 24
8.3 Dedicated Sampling System Installation 24
8.4 Wellhead Completion 24
8.5 Geodetic Survey 24
8.6 Site Restoration 25
9.0 DEVIATIONS FROM THE R-26 SAP 26
10.0 ACKNOWLEDGEMENTS 26
11.0 REFERENCES 26

TABLE OF CONTENTS (continued)

APPENDIXES

A	Borehole Videos (DVDs included)
B	Schlumberger Geophysical Report and Montages (CD included)
C	Groundwater Analytical Results
D	Lithology Log
E	Aquifer Testing Report and Aquifer Test Data
F	Westbay Installation Report
G	NMED Discharge Approval and Discharge Media Analytical Results
H	Activities Planned for Well R-26 Compared with Work Performed

LIST OF FIGURES

1.0-1	Site Location Map, Well R-26 Location
3.0-1	Well Summary Data Sheet for Well R-26
7.2-1	Schematic Diagram of Well R-26
7.3-1	Schematic Diagram of Corehole Piezometers of Well R-26
8.1-1	Effects of Pump Development of the Upper Screen on Water Quality Parameters at Well R-26
8.1-2	Effects of Pump Development of the Lower Screen on Water Quality Parameters at Well R-26

LIST OF TABLES

3.0-1	Operations Chronology for Well R-26
3.2-1	Introduced and Recovered Drilling Fluids
5.1-1	Borehole and Well Logging Surveys Conducted in R-26
7.1-1	Summary of Well Screen Information for Well R-26
7.2-1	Annular Fill Materials Used in Well R-26
8.1-1	Development and Testing of Well R-26
8.5-1	Geodetic Data for Well R-26

LIST OF ACRONYMS AND ABBREVIATIONS

ASTM	American Society for Testing and Materials
bgs	below ground surface
DOE	United States Department of Energy
DTH	down-the-hole
DTW	depth to water
DVD	digital video disc
EES	Earth and Environmental Sciences
ELAN	Elemental Analysis
EnviroWorks	EnviroWorks, Inc.
ft	feet
g	grams
gal.	gallon
g/cc	grams per cubic centimeter
GEL	General Engineering Laboratories
hr	hour
HSA	hollow-stem auger
ID	inner diameter
in.	inches
KA	Kleinfelder, Inc.
KBr	potassium bromide
LANL	Los Alamos National Laboratory
MDL	Method Detection Limit
mil	1/1000 of an inch
MP	multiport
NAD	North American Datum
NGS	natural gamma spectroscopy
NMED	New Mexico Environment Department
NOI	Notice of Intent
NTU	nephelometric turbidity unit
OD	outer diameter

psi	pounds per square inch
PVC	polyvinyl chloride
Qbog	Guaje Pumice Bed
Qbt	Tsirege Member of Bandelier Tuff
R-26	Well R-26
SAP	Sampling and Analysis Plan
TA	technical area
TD	total depth
TLD	triple detector lithodensity
TOC	total organic carbon
µS/cm	microsiemens per centimeter
WDC	WDC Exploration & Wells, Inc.

ABSTRACT

Well R-26 was installed at Los Alamos National Laboratory (LANL) for LANL's Groundwater Protection Program as part of the "Hydrogeologic Workplan" (LANL 1998). The Department of Energy (DOE) contracted and directed the installation of Well R-26. The purpose of the well is (1) to characterize intermediate-depth perched groundwater penetrated by existing wells R-25 and SHB-3, and (2) to provide background water chemistry for perched and regional groundwater upgradient of LANL activities in the Technical Area (TA)-16 vicinity. Well R-26 is located on the downthrown block of the Pajarito fault system; data from this well will be used to evaluate the influence of the Pajarito fault system on the regional aquifer piezometric surface and to provide information on the role of faults in recharge.

The well was drilled in two phases. Phase I consisted of collecting continuous core from the surface to a depth of 250 feet (ft) below ground surface (bgs). Core will be used characterize anion profiles in the vadose zone. In Phase II drilling, a borehole was advanced to a total depth (TD) of 1,490.5 bgs into the regional aquifer and installing a well. The well was sampled to determine water quality, and hydrologic testing was conducted to evaluate aquifer parameters.

The R-26 borehole was drilled using fluid-assisted air-rotary and mud-rotary drilling methods. The 5-inch outer diameter stainless-steel well was installed on October 18, 2003, to a TD of 1,479 ft bgs with two screened intervals; the upper screened interval was set within the intermediate-depth perched groundwater, and the lower screened interval was set in the regional aquifer. A Westbay multi-port sampling system was installed on July 16, 2004 for long-term monitoring of water levels and collection of groundwater samples. The stratigraphy encountered during borehole drilling included, in descending order, alluvium, ash-flow tuffs of the Tshirege Member of the Bandelier Tuff, Cerro Toledo interval, ash-flow tuffs of the Otowi Member of the Bandelier Tuff, the Guaje Pumice Bed of the Otowi Member, and Puye Formation sediments.

Samples of drill cuttings were collected at regular intervals for stratigraphic, petrographic, and geochemical analysis. A perched water zone was encountered in the R-26 corehole at 240 ft bgs in the Tshirege Member of the Bandelier Tuff. A groundwater sample was collected at 240 ft bgs and was submitted for analysis. Groundwater saturation was first noted while drilling at 650 ft bgs. A groundwater screening sample was collected at 604 ft bgs and was submitted for analysis. Groundwater samples were collected from the completed well's upper screen at 651.8 to 669.9 ft bgs and from the lower screen at 1,421.8 to 1,445 ft bgs. All samples were analyzed for organic, inorganic, and radiochemical compounds.

1.0 INTRODUCTION

This completion report summarizes the drilling, well construction, well development, and related activities conducted from August 27, 2003 to July 18, 2004 to characterize Well R-26 (R-26). R-26 was drilled and installed for Los Alamos National Laboratory's (LANL's) Groundwater Protection Program as part of the "Hydrogeologic Workplan" (LANL 1998). Characterization and sampling activities were conducted in accordance with the SAP (Sampling and Analysis Plan) for Drilling and Testing Characterization Wells R-2, R-4, R-11, and R-26 (LANL 2003). R-26 is located in Cañon de Valle, just east of State Highway 4 and upgradient of LANL activities at Technical Area (TA)-16. The locations of R-26 and adjacent wells are shown in Figure 1.0-1. An electronic copy of this report and appendixes is included on the CD on the inside back cover.

R-26 was funded and directed by the U.S. Department of Energy (DOE). Kleinfelder, Inc. (KA), under contract to the United States Army Corps of Engineers (USACE), was responsible for executing the drilling, installation, testing, and sampling activities with technical assistance from LANL.

The information presented in this report was compiled from field reports and activity summaries generated by KA, LANL, and subcontractor personnel, such as Schlumberger, who provided geophysical logging services and data interpretation. Results of these activities are discussed briefly and shown in tables and figures contained in this report.

R-26 is designed to provide water quality and water level monitoring data from the regional aquifer. R-26 will provide hydrologic and water-quality data for regional groundwater upgradient of potential contaminant sources in TA-16. Data from R-26 and other hydrogeologic data will provide a basis for evaluating the need for groundwater monitoring and will form the technical basis for the design of a groundwater monitoring system. Water quality, geochemical, hydrologic, and geologic information obtained from R-26 will augment knowledge of regional subsurface characteristics and will serve as a monitoring well upgradient of potential release sites.

2.0 PRELIMINARY ACTIVITIES

Preliminary activities at R-26 included administrative and site preparation.

2.1 Administrative Preparation

On July 11, 2003, KA received contractual authorization, in the form of a notice to proceed, to start administrative preparation tasks. As part of this preparation, KA developed a Project Management Plan (KA 2003a), a Contractor's Quality Management Plan (KA 2003b), a Site-Specific Health and Safety Plan (KA 2003c), a traffic control plan, and a Drilling Plan (KA 2003d) for the work at Well R-26. The host facility signed a Facility-Tenant Agreement to provide access and security controls for site preparation, drilling and well installation activities. Necessary permits and access agreements were obtained before beginning fieldwork.

2.2 Site Preparation

EnviroWorks, Inc. (EnviroWorks) was subcontracted by KA to prepare the site. Activities included site clearing, access road improvement, construction of the drill pad, and construction of a lined borehole-cuttings containment area. Site preparation was begun on August 27, 2003 and was completed on September 16, 2003.

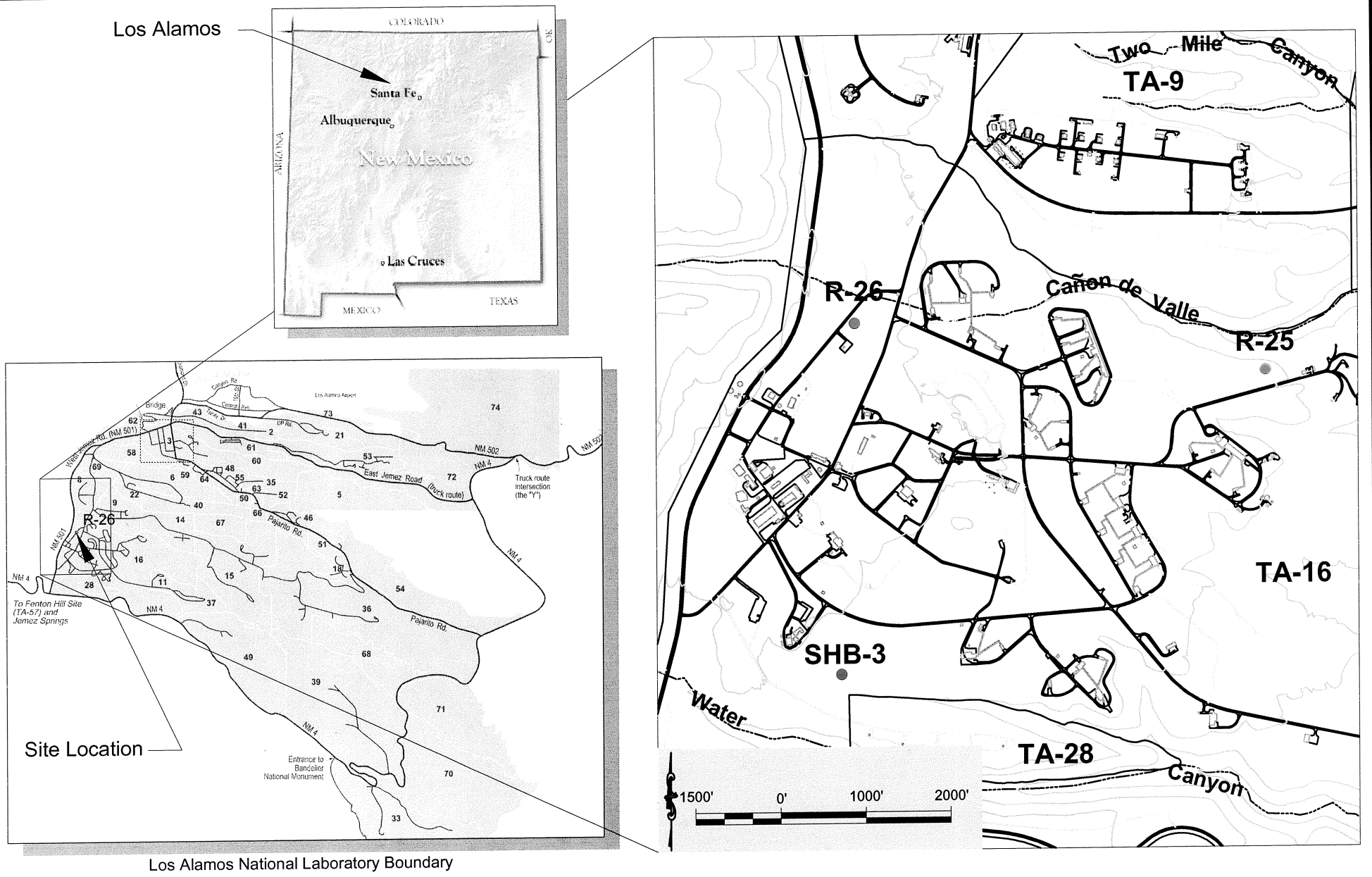

Note: R-26 Well Identification Modified from Proposed R Characterization Well Location Map Provided by Los Alamos National Laboratory

KLEINFELDER	
Drawn By: C. Landon	Date: April 2004
Project No.: 37151	Filename: FIGURE 1.0–1
Scale: 1" = 2000'	Revision: 0

SITE LOCATION MAP
Well R-26 Location
LANL Well Program
Los Alamos National Laboratory
Los Alamos, New Mexico

FIGURE **1.0-1**

L:\2003\PROJECTS\37151 DOE Deep Wells\4.0 – Project Technical Information\4.3 – Project Deliverables\R-26

© Kleinfelder, Inc. 2004

The site was initially cleared of vegetation. The drilling pad was then developed by grading an area with a front-end loader. A primary layer of base-course gravel was distributed over the drill pad area. To store Well R-26 drilling fluids and borehole cuttings, a 30-feet (ft) -wide by 60-ft-long by 7-ft-deep borehole-cuttings containment pit was excavated along the eastern drill pad boundary. A secondary containment area was lined with 6-mil (1/1000 of an inch) polyethylene and surrounded by straw bales to accommodate a 21,000-gallon (gal.) tanker trailer used for storing development water and drilling fluids pumped from the borehole-cuttings containment area. Drill pad construction was completed with an additional graded layer of base-course gravel. Safety barriers and signs were installed around the borehole-cuttings containment area and at the site entrance. Office and supply trailers, generators, and safety lighting equipment were moved to the site during subsequent mobilization of drilling equipment. Base course was also placed on the access road, as necessary. Equipment necessary for the completion of the drilling project was situated at the work site to provide a safe, secure work site. Orientation and placement of the equipment was dependent on borehole location and physical constraints at the drill site.

Potable water for drilling at Well R-26 was pumped from a hydrant adjacent to the fire station located off West Jemez Road and delivered to the site through a fire hose.

3.0 SUMMARY OF DRILLING ACTIVITIES

Drilling activities at Well R-26 were completed in two phases during September and October 2003. Phase I drilling was performed by KA using a StrataStar SS15 drill rig equipped with a 2-ft-long split spoon used to collect 2.0-in.-diameter samples, a 5-ft-long core barrel used to collect 3.0-in.-diameter continuous core samples, and an HQ sampler to collect 2.4-in.-diameter core samples. Phase II drilling was performed in an offset borehole by WDC Exploration and Wells, Inc. (WDC) using a Dresser T70W drill rig equipped with conventional circulation drilling rods, tricone bits, down-the-hole (DTH) hammer bits, and support equipment. Drilling fluid mixing and circulation equipment included a mixing tank and pump assembly, an auxiliary pump, a shaker unit to remove solids from the discharged drilling fluids, and a generator to power the mixing unit.

The goal of Phase I drilling was to collect continuous rock core samples for geologic characterization and to determine moisture, anion, stable isotope, radionuclide, metals, and tritium distributions in the upper section of the borehole. Planned total depth (TD) for Phase I was 250 ft bgs, or approximately 250 ft into the Tshirege Member of the Bandelier Tuff. Groundwater samples were to be collected from significant perched zones, if encountered.

Drilling of the borehole for Phase II was performed using air-rotary, fluid-assisted air-rotary, and mud-rotary drilling techniques using open-hole and casing-advance methods, as appropriate for changing geologic and drilling conditions. Various additives were mixed with municipal water to improve borehole stability, to minimize fluid loss, and to facilitate cuttings removal from the borehole. Air-rotary drilling was assisted with water at shallow depths to suppress dust emissions and, at greater depths, with a foam mixture that consisted of municipal water mixed with QUIK-FOAM® (surfactant) and EZ-MUD® (polymer). Mud-rotary drilling fluids were comprised of a mixture of water, bentonite, soda ash, and Pac-L polyanionic cellulose.

Primary Phase II drilling objectives were (1) to collect cuttings of encountered geologic formations; (2) to collect water samples from perched and regional groundwater zones; (3) to

complete a borehole for geophysical logging; and (4) to install a well with two screened intervals, one in the intermediate perched zone, if present, and one in the regional aquifer. The planned TD for Phase II drilling was approximately 1,414 ft bgs, roughly 100 ft below the predicted regional water table.

Coring and deep drilling activities were conducted from September 8 through October 17, 2003. Phase I drilling was completed in one shift per day from September 8 through September 12, 2003. Phase II drilling activities were performed generally in one shift per day from September 18 through October 14, 2003. Two shifts per day began on October 14 and continued through October 21, 2003, during well construction. A drill shift nominally represents a 12-hour (hr) period spent on the project by the drill crew, two site geologists, and onsite support equipment. Drilling and well construction work was conducted under a 7-days-per-week schedule.

Figure 3.0-1 summarizes well data and graphically depicts groundwater and geologic conditions encountered in R-26. Sections 3.1 and 3.2 discuss Phase I and Phase II drilling activities, respectively, for R-26.

A tabular chronology of drilling and other onsite activities is presented as Table 3.0-1.

3.1 Phase I Drilling Activities

On September 8, 2003, KA mobilized a StrataStar SS15 hollow-stem auger (HSA) drill rig and support equipment to the R-26 site and began Phase I core drilling. The corehole drilling was initiated with an 8-in. nominal outer diameter (OD) HSA using a DTH hammer with a split-spoon sampler. At 19 ft bgs, KA switched to the continuous sampler system to achieve optimal core recovery. This proved ineffective, and drilling and sampling with the split-spoon sampler was resumed at 25 ft bgs. Split-spoon sampling proved to be difficult from 25 ft to 31 ft bgs.

At 31 ft bgs, KA switched to an air-assisted drilling method using a conventional 3-in. OD core barrel attached to an HQ drill rod. Dust suppression equipment was installed. Coring from 31 ft to 55 ft bgs yielded poor recovery. On September 10, 2003, KA reverted to split-spoon sampling and advanced the hole from 55 ft to 65 ft bgs with limited recovery. Coring with the conventional core barrel was resumed at 65 ft bgs for drilling in the strongly welded tuff. At 70 ft bgs, the drillers replaced the conventional core barrel with a Geobarrel® and cored continuously to 145 ft bgs, where the Geobarrel® core bit was replaced due to excessive wear. Equipped with a new coring bit, the drillers returned to conventional core barrel techniques and advanced the core hole from 145 ft bgs to the planned TD of 250 ft bgs.

On September 15, 2003, the drillers tripped out the drill stem, and video, natural gamma, and resistivity logs were run in the corehole. The video log (Appendix A) revealed possible perched zones of saturation from 150 to 180 ft bgs and 230 to 250 ft bgs. Depth to groundwater was measured at 242 ft bgs in the corehole. A groundwater screening sample was collected from the open corehole at 240 bgs on September 18, 2003, and was submitted for analysis. Two piezometers were installed with screened intervals in the potential zones of saturation. Further discussion on the piezometer installation is in Section 7.3.

Location: Mesa South of Cañon de Valle
(on down thrown side of Pajarito Fault) TA-16

Description: Brass Marker
Northing: 1764721.12
Easting: 1610267.33
Elevation: 7641.69

Description: Well Casing
Northing: 1764721.35
Easting: 1610269.56
Elevation: 7643.33

Coring:
(0' - 31') Auger
(31'-55') HQ Coring
(55' - 65') Auger
(65' - 250') HQ Coring

Drilling:
(0' - 77') 13-3/8" Air Rotary Casing Hammer
(77' - 140') 12-1/4" Tri-Cone, Air-rotary
(140' - 205') Air-rotary with water
(205' - 1005') Fluid-assisted (AWQE) air rotary
(1005' - 1490.5') Mud-rotary 8.5" Tri-Cone

Reaming:
(77' - 1005') 14" Roller Reamed - unsuccessful
(1005' - 1490') 10" Reamed - partial success

Data Collection:
- Hydrologic Properties:
  Constant discharge pumping test: 2/11/04 - 2/27/04
- Cores/Cuttings submitted for geochemical and contaminant characterization: 13
- Ground Water Samples Submitted
  Perched Ground Water - 9/18/03 (240') - corehole
  Deep Ground Water -
  Screening Samples: 9/22/03 (604')
  Well Samples: 11/14/03 (1430')
  11/16/03 (660')
- Geologic Properties:
  Cuttings submitted for mineralogy, petrography, and chemistry: 7

Borehole Logs:
- Lithologic: 0' - 1490.5'
- Video (LANL tool): 0' - 717'
- Caliper Logging: 0 - 1475'
- Schlumberger logs:
  Compensated Neutron Log:
  9/28/03: Open Hole: 70'-985'
  10/14/03: Cased: 500'-1005'; Open Hole: 1005'-1481'
  Triple Litho-Density:
  9/28/03: Open Hole: 70'-985'
  10/14/03: Cased: 500'-1005'; Open Hole: 1005'-1481'
  Array Induction Imager:
  9/28/03: Open Hole: 70'-979'
  10/14/03: Cased: 500'-1005'; Open Hole: 1005'-1476'
  Elemental Capture Sonde:
  9/28/03: Open Hole: 70'-981'
  10/14/03: Cased: 500'-1005'; Open Hole: 1005'-1477'
  Natural GR Spectroscopy:
  9/28/03: Open Hole: 70'-979'
  10/14/03: Cased: 500'-1005'; Open Hole: 1005'-1460'
  Combinable Magnetic Resonance:
  9/28/03: Open Hole: 70'-967'
  10/14/03: Cased: none; Open Hole: 1005'-1464'
  Fullbore Formation Micro Imager:
  9/28/03: Open Hole: 450'-985'
  10/14/03: Cased: none; Open Hole: 1005'-1483'

Corehole Logs:
- Lithologic: 0' - 250'
- Video (LANL tool): 0' - 241'
- Gamma Ray (LANL Tool): 0'-245'
- Array Induction (LANL Tool): 0'-245'

Core Drilling Completed: 9/8/03-9/12/03

Rotary Drilling Completed: 9/18/03-10/17/03

Contract Geophysics: 9/28/03 and 10/14/03-10/15/03

Well Installation: 10/17/03-10/21/03

Well Developed: 10/29/03-11/16/03

- Casing:
  4.46" ID / 5.0" OD A304 Stainless Steel casing with external couplings
- Number of Screens:
  Two (2) 4.46" ID wire wrapped stainless steel with external couplings.
  Screen #1 (Upper): 5.53" OD Pipe based 0.010 slot
  Screen #2 (Lower): 5.27" OD Rod based 0.020 slot
- Screen Intervals:
  Screen #1 (Upper): 651.8' - 669.9'
  Screen #2 (Lower): 1421.8' - 1445'

Well Development performed by airlifting, swabbing, bailing, and pumping.
Total Volume Purged: 41,069 gallons

Corehole Temporary Piezometer Completions
- Casing - 1" OD Sched. 40 PVC threaded
- Number of Screens - One (1) 1" OD Sched. 40 PVC 0.010 slotted in each piezometer
- Screen Interval -
  Piezometer 1 - 230'-250'
  Piezometer 2 - 150'-180'

Geologic contacts for R-26 were determined from core samples, cuttings, borehole video, and geophysical logs.

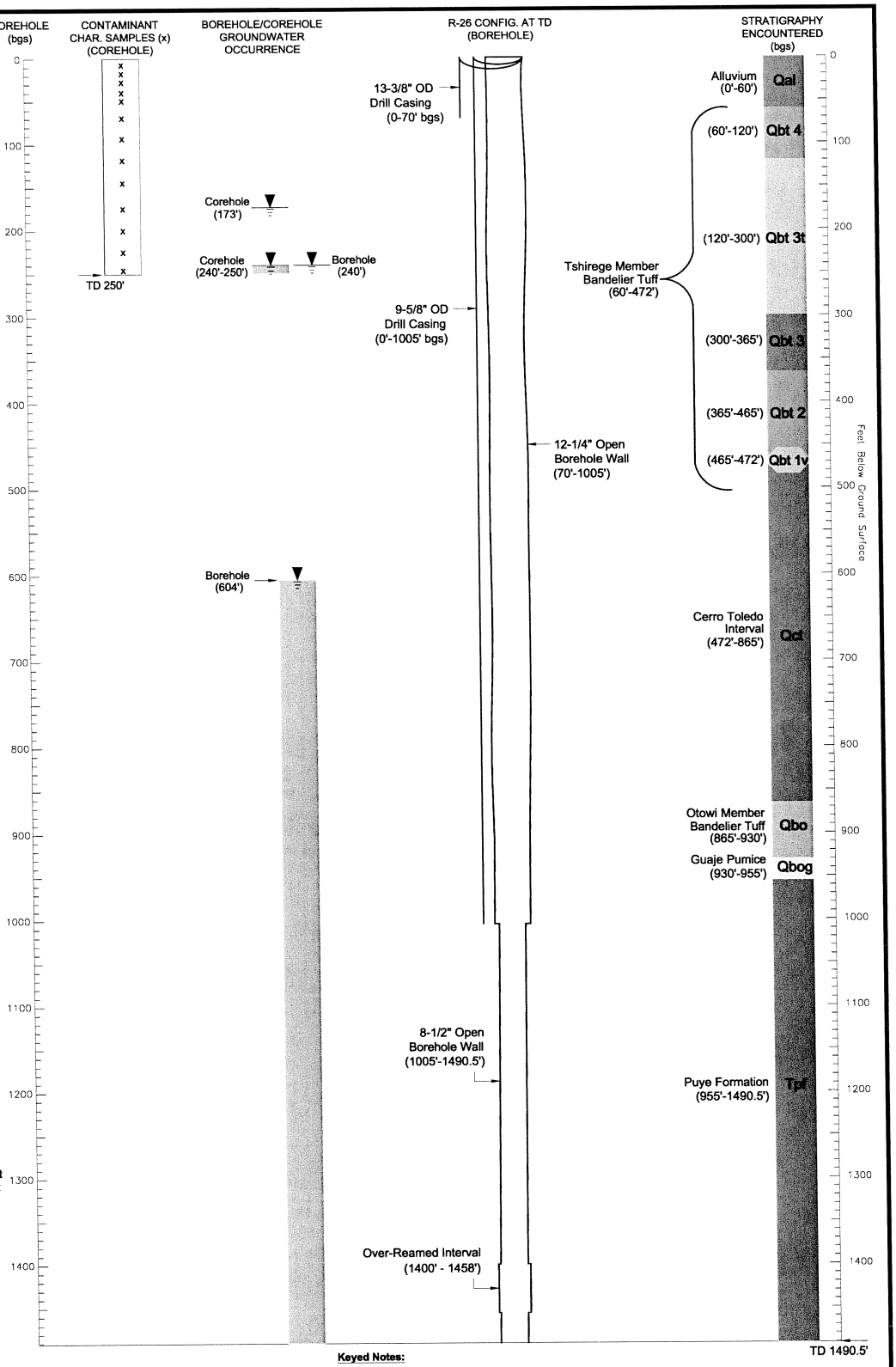

Keyed Notes:

1. Coordinates - NM State Plane Grid Central Zone (North America) Datum - 1983 (NAD83); expressed in feet.
2. Elevations - National Geodetic Vertical Datum (NGVD29); expressed in feet above mean sea level.
3. All depths are below ground surface (bgs).
4. Drill casing removed prior to well installation.
5. Borehole reamed across Screen #2 Interval (1421.8'-1445')
6. Water level measurement in shallow piezometer was 172.97'; the deep piezometer was dry when sounded on 11-25-03.
7. Post-development composite groundwater level measurement recorded on 9-21-03.

KLEINFELDER		WELL SUMMARY DATA SHEET Well R-26 Los Alamos National Laboratory Los Alamos, New Mexico	FIGURE 3.0-1
Drawn By: C. Landon	Date: January 2005		
Project No.: 37151	Filename: Figure 3.0–1.dwg		
Scale: not–to–scale	Revision: 4		

© Kleinfelder, Inc. 2005

TABLE 3.0-1. OPERATIONS CHRONOLOGY GRAPH FOR WELL R-26

TASK DESCRIPTIONS	DATE																							
	August-03		Sep-03			Oct-03			Nov-03		Dec-03			Jan-04		Feb-04		Mar-04		Apr-04		May-04	Jun-04	Jul-04	
SITE PREPARATION ACTIVITIES		8/27		9/16																				
COREHOLE DRILLING AND SAMPLING			9/8																					
Mobilization			9/8																					
Continuous Coring			9/8		9/12																			
LANL Video & Geophysics					9/15																			
Plug & Abandon Corehole																								
BOREHOLE DRILLING AND SAMPLING				9/17		10/17																		
Mobilization				9/17																				
Air Rotary				9/18																				
Fluid Assisted Air Rotary				9/19																				
Mud Rotary					9/20	10/17																		
Groundwater Screening Sampling				9/18, 9/21-22																				
BOREHOLE GEOPHYSICS				9/22		10/16																		
Schlumberger Logging					9/28	10/14-15																		
LANL Video				9/15	9/22																			
LANL Geophysics						10/16	10/17																	
WELL DESIGN AND CONSTRUCTION						10/17-21																		
WELL DEVELOPMENT							10/18			11/17														
GROUNDWATER WELL SAMPLING									11/14	11/16														
HYDROLOGIC TESTING																2/16	2/27	3/6						
SITE RESTORATION																				4/4-8			7/16-18	
WESTBAY INSTALLATION																								

NOTES:
Shaded area indicates no activity

3.2 Phase II Drilling Activities

On September 17, 2003, WDC mobilized a Dresser T70W drill rig, compressor and, support equipment to the site for Phase II drilling. The Phase II borehole was located 91 ft northeast of the corehole. On September 18, 2003, the WDC drill crew advanced 13⅜-in. OD drill casing to 65 ft bgs with a 12¼-in. tricone drill bit. The borehole was drilled ahead of the drill casing to 77 ft bgs.

On September 19, 2003, WDC drove the 13⅜-in. conductor casing to 70 ft bgs, then advanced the borehole with the 12¼-in. tricone drill bit and air-rotary methods from 77 ft bgs to 140 ft bgs. The drillers switched to a 12¼-in. DTH hammer bit with air only and drilled open-hole to 147 ft bgs. The borehole was checked for the presence of groundwater at the end of the shift and at the start of work on September 20, 2003; none was present. Open-hole air-rotary drilling resumed at 147 ft bgs, and water was used for dust suppression.

On September 20, 2003, at approximately 205 ft bgs, drilling fluids consisting of QUIK-FOAM® and EZ-MUD® and potable water were used to facilitate cuttings removal and borehole stabilization. Table 3.2-1 shows the total amount of drilling fluids introduced and recovered from the borehole during Phase II drilling activities. The borehole was advanced through the Tshirege Member of the Bandelier Tuff and into volcaniclastic sediments and pumice beds of the Cerro Toledo interval to 565 ft bgs.

Table 3.2-1
Introduced and Recovered Drilling Fluids

Material	Unit	Amount
QUIK-FOAM®	Gallon	31
EZ-MUD®	Gallon	3.25
Potable Water	Gallon	23,690
Drilling Mud[1]	Gallon	95,500
Recovered Fluids[2]	Gallon	53,856

[1] Drilling Mud is a mixture of water, bentonite, soda ash and Pac-L polyanionic cellulose
[2] Recovered fluids represents approximate fluids recovered during drilling based on pit dimensions. Fluids removed during well development are included in Table 8.1-1.

On September 21, 2003 a measured depth-to-water (DTW) indicated that the borehole was dry. Drilling resumed open hole using air and a mixture of potable water, EZ-MUD® and QUICK-FOAM®. At 650 ft bgs, observations of the drilling discharge indicated the potential presence of groundwater. The borehole was advanced to 720 ft bgs, where drilling was halted and all tools were tripped out of the borehole. DTW measurements indicated groundwater stabilized after approximately one hour at 604.3 ft bgs. A groundwater screening sample was collected for chemical analysis with a stainless-steel bailer, and the site was secured for the day.

At the beginning of the shift on September 22, 2003, the DTW was measured at 604.2 ft bgs. A second groundwater sample was then collected for chemical analysis with a stainless-steel bailer and the video camera was deployed in the open borehole to document subsurface conditions.

Fluid-assisted drilling resumed open-hole from 720 ft bgs to 900 ft bgs in Cerro Toledo sediments and the Otowi Member of the Bandelier Tuff using a 12¼-in. mill-tooth tricone bit. On the morning of September 23, 2003, the DTW was measured at 611.7 ft bgs. The drillers advanced the borehole from 900 ft through the Guaje Pumice Bed and into the clastic sediments of the Puye Formation to 1,000 ft bgs using a 12¼-in. tricone button bit with fluid-assisted air-rotary drilling methods. At 1,000 ft bgs, WDC elected to switch to the mud-rotary drilling method because of increased borehole sidewall instability.

On September 24 and 25, 2003, WDC mobilized a shaker table and other equipment to prepare for mud-rotary drilling. The New Mexico Environment Department (NMED) approved all mud-drilling additives. On September 25, 2003, three 1,500-gal. batches of drilling mud were mixed and pumped into the borehole. A single batch of drilling mud consisted of 1500-gal. of water, 12 to 22 bags of Aqua-Gel powdered bentonite, 8 quarts of Pac-L (Drispack) and 10 pounds of soda ash. Drilling mud-batch mixing continued through September 26 and 27, 2003. By the end of the shift on September 27, 42,000 gal. of drilling mud had been pumped into the borehole. The calculated capacity of the borehole was 5,932 gal. The top of the mud was last measured at 170 ft bgs, indicating that substantial fluid loss was occurring from the borehole. A total of 7 bags of N-Seal (lost circulation material) had been added to the last five batches of the day to attempt to mitigate the fluid loss from the borehole.

On September 28, 2003, Schlumberger arrived onsite and ran geophysical logging tools described in Section 5.0.

On September 29, 2003, WDC attempted to run 11¾-in. threaded drill casing into the borehole to prevent further fluid loss problems in the borehole. An imperfection in the borehole prevented the 11¾-in. drill casing from being lowered past 131.5 ft bgs. The imperfection was possibly either a slight deviation in the alignment of the borehole or a rock ledge. The borehole was subsequently reamed to 160 ft bgs with a 12½-in. tricone bit in an attempt to remove the imperfection; however, the 11¾-in. casing could not be lowered or pushed past 135 ft bgs when installation was reattempted. On September 30 and October 1, 2003, WDC reamed the entire borehole from ground surface to 1,005 ft bgs with an 8-in. tricone drill bit and an 8-in. roller-reamer bit positioned above the drill bit. The roller-reamer bit was capable of expanding to a maximum effective diameter of 14-in. However, drill rig pump pressures were not sufficient to achieve the maximum reaming diameter. Water and QUIK FOAM® were used to ream the borehole. On October 2, 2003, DTW was measured at 606 ft bgs and the 11¾-in. drill casing was tripped in for a third time to approximately 135 ft bgs, where it once again encountered the imperfection that prevented further advancement of the casing.

A decision was made to install smaller-diameter drill casing that would theoretically bypass the obstruction. On October 3 and 4, 2003, the 9⅝-in. drill casing was installed to a final depth of 1000 ft bgs. At 0830 on the morning of October 4, 2003, the drill crew began days off. On October 10, 2003, drilling operations resumed. WDC mixed and pumped three 1,500-gal. batches of drilling mud into the cased borehole. The batches consisted of water, 10 bags of bentonite, 10 bags of soda ash, and 6 quarts of Pac-L polyanionic cellulose. At approximately 980 ft bgs, while reaming the 9⅝-in. drill casing with the 8½-in. tricone button bit, the drill casing slipped down 5 to 1,005 ft bgs. On the following day, WDC reamed cuttings from the casing and drilled open-hole from 1,005 to 1,145 ft bgs in the Puye fanglomerate using the 8½-in. tricone button bit and mud-rotary techniques.

On the morning of October 11, 2003, the borehole was reamed and drilling resumed. Drilling continued open-hole using the same equipment and methods until October 14, 2003, when the borehole had been advanced to 1,485 ft bgs. Schlumberger mobilized borehole geophysical logging equipment to the site the same day and gathered borehole geophysical data, which are described in Section 5.0. On October 15, 2003, WDC set up to ream the borehole with a 4½-in. tricone pilot bit with a 2½-in. side reamer using mud-rotary methods. The crew worked through the night, and on October 16, 2003, had reamed the borehole to 1,485 ft bgs, still within the Puye Fanglomerate, and had over-drilled an additional 5 ft to 1,490.5 ft bgs, the TD of the borehole. The LANL geophysics trailer was mobilized to the site to run the borehole caliper to verify that the borehole diameter was sufficient to build a monitoring well with the required 2-in. annulus. Caliper data indicated that the borehole diameter was 8.5-in. within the vicinity of the planned well-screen interval, too small to provide the required 2-in. annulus for a 5-in.-diameter well screen (caliper log on compact disk [CD], inside back cover). WDC subsequently reamed the borehole again from 1,400 to 1,475 ft bgs with the 14-in. hydraulic roller-reamer and 4.5-in. tricone pilot bit. After the borehole had been reamed to 1,485 ft bgs, caliper data indicated that the borehole measured at least 9.3-in. in diameter throughout the planned lower screened interval of the monitoring well (caliper log on CD, inside back cover). Phase II drilling was completed on October 17, 2003, and well construction preparations commenced.

4.0 SAMPLING AND ANALYSIS OF DRILL CUTTINGS AND GROUNDWATER

4.1 Sampling of Drill Cuttings and Core

During drilling operations at R-26, drill cuttings were collected according to the LANL-prepared Sampling and Analysis Plan (LANL 2003). As drilling conditions permitted, an ample quantity of borehole material was collected from the discharge line at 5-ft intervals. A portion of the cuttings was sieved (at >#10 and >#35 mesh, or >#35 and >#60 for finer-grained samples) and placed in chip-tray bins along with an unsieved portion. These chip trays were studied to determine lithologic characteristics and were used to prepare the lithologic logs. The remaining cuttings were sealed in Ziploc® bags and set in core boxes for curation. Seven samples were removed by LANL for mineralogic, petrographic, and geochemical analyses. No cuttings samples were submitted for contaminant characterization analysis.

Core samples were collected from R-26 and analyzed for cations, anions, metals, and radionuclides for characterization purposes. Thirteen samples of core were collected from the vadose (unsaturated) zone during drilling from 5 ft to 250 ft bgs. Approximately 500 grams (g) to 1,000 g of core samples were placed in appropriate sample jars and protective plastic bags before being delivered to Earth and Environmental Sciences (EES)-6, Coastal Science Laboratories, Inc., and General Engineering Laboratories (GEL) for laboratory analysis. Analytical results will be included in future investigation reports for Cañon de Valle.

4.2 Sampling of Groundwater

During Phase I drilling operations at R-26, perched groundwater was encountered at 240 ft bgs, and a groundwater screening sample was collected on September 18, 2003, from the corehole for analysis. Groundwater samples have not been collected from the temporary piezometers.

During Phase II drilling operations, groundwater was first encountered at 650 ft bgs on September 21, 2003. After the borehole was advanced to 720 ft bgs, the water table was

measured at 604 ft bgs. At this stage, the drill system was removed from the borehole, and a groundwater screening sample was collected using a wireline bailer. On the morning of September 22, 2003, the DTW was measured at 604 ft bgs, and a second groundwater screening sample was collected from the open borehole. Because the second sample contained less suspended sediment, it was submitted for analysis and the first sample was disposed of.

Although the regional water table was predicted to occur at 1,314 ft bgs, neither the drillers nor the onsite geologists were able to distinguish between the increased flow detected from the drilling discharge line at approximately 600 ft bgs and groundwater in the regional aquifer. Geophysical log interpretation suggests that full saturation does not occur until the Puye Formation is encountered at 955 ft bgs (see Section 5.2 and Appendix B, Schlumberger's Geophysical Report and Montages, for further discussion). During well development activities, two groundwater samples were collected from the completed well R-26 on November 14 and 16, 2003. With a packer isolating the two screened intervals, these samples were collected from 1,430 ft and 660 ft bgs, respectively, and were submitted for analysis.

Further discussion of the groundwater sampling and analytical results are presented in Appendix C.

5.0 BOREHOLE GEOPHYSICS

Using LANL-owned and subcontractor-owned tools, KA and Schlumberger performed borehole geophysics logging operations at R-26.

5.1 KA-Supported Geophysical Logging

On September 15, 2003, video, natural gamma, and resistivity logging were performed in the R-26 corehole using downhole tools provided by LANL. The logs were used to look for perched water and to aid in lithologic contact identification. On September 22, 2003, video logging was performed in borehole R-26 using downhole tools provided by LANL. On October 16, 2003, caliper logging was performed in the borehole to determine whether the borehole diameter was sufficient for well screen installation. On October 17, 2003, after the borehole was reamed, caliper logging was rerun to confirm that the borehole was of sufficient diameter.

Table 5.1-1 summarizes the video and geophysical well logs conducted in R-26. The video logs of the open borehole were digitized onto the two digital videodiscs (DVDs) that are included as Appendix A. The gamma, resistivity, and caliper logs are included on the CD included on the back inside cover of this report.

Table 5.1-1
Borehole and Well Logging Surveys Conducted in R-26

Operator	Date	Method	Cased Footage (ft bgs)	Open-hole Interval (ft bgs)	Remarks
KA/LANL	September 15, 2003	Video	0-65	65-241	Corehole video to identify accumulated water
KA/LANL	September 15, 2003	Gamma and Resistivity Log	0-65	65-245	Corehole logging
KA/LANL	September 22, 2003	Video	0-70	70-717	Open-borehole video
Schlumberger	September 28, 2003	Logging suite[a]	0-70	70-985[b]	Schlumberger borehole logging conducted on open hole before installing casing
Schlumberger	October 14 and October 15, 2003	Logging suite[a]	0-1005	1005-1477[b]	Schlumberger borehole logging conducted to TD before well installation
KA/LANL	October 16, 2003	Caliper Log	0-1005	977-1459	Borehole logging to determine diameter before well installation
KA/LANL	October 17, 2003	Caliper Log	0-1005	1374-1474	Borehole logging to determine diameter before well installation

[a] Schlumberger suite of borehole logging surveys included triple detector litho-density, array induction tool, epithermal compensated neutron tool, elemental capture spectrometry, full-bore formation microimager, combinable magnetic resonance tool, natural gamma spectrometry, caliper gamma ray, spontaneous potential, and platform express.

[b] Variable effective depths, see Appendix A.

5.2 Schlumberger Geophysical Logging

The primary purpose of the Schlumberger logging was to characterize the conditions in the hydrogeologic units penetrated by the R-26 borehole, with emphasis on gathering moisture distribution data, identifying possible perched water zones, measuring capacity for flow (porosity and moisture), and obtaining lithologic/stratigraphic data. Secondary objectives included evaluating borehole geometry and determining the degree of drilling fluid invasion along the borehole wall.

Schlumberger personnel conducted geophysical logging in the R-26 borehole on September 28 and again on October 14 and 15, 2003. During the initial geophysical logging, a 13⅜-in. OD drill casing extended from the ground surface to 70 ft bgs, and the remainder of the borehole was open to 985 ft bgs. During the second run of geophysical logging, a 13⅜-in. OD drill casing extended from the ground surface to 70 ft bgs, and a 9⅝-in. OD steel drive casing extended from the surface to 1,005 ft bgs; the remainder of the hole was open to 1,485 ft bgs.

Schlumberger personnel ran a suite of geophysical logging tools in the cased and uncased portions of the borehole. The suite included the following tools:

- Combinable Magnetic Resonance™ tool measures the nuclear magnetic resonance response of the formation. It is used to evaluate total and effective water-filled porosity of the formation and to estimate pore-size distribution and in-situ hydraulic conductivity.
- Array Induction Tool, version H™, measures formation electrical resistivity and borehole fluid resistivity, thus evaluating the drilling fluid invasion into the formation, the presence of moist zones away from the borehole wall, and the presence of clay-rich zones.
- Triple Detector Litho-Density™ measures formation bulk-density related to porosity, photoelectric effect related to lithology, and borehole diameter using a single-arm caliper.
- Natural Gamma Spectroscopy (NGS™) measures spectral and overall natural gamma-ray activity, including potassium, thorium, and uranium concentrations, thus evaluating geology and lithology.
- Elemental Capture Spectroscopy™ measures concentrations of hydrogen, silicon, calcium, sulfur, iron, aluminum, potassium, titanium, chlorinity, and gadolinium to characterize mineralogy, lithology, and water content of the formations.
- Epithermal Compensated Neutron Tool, model G™, measures volumetric water content beyond the casing to evaluate formation moisture content and porosity.
- Full-Bore Formation Micro-Imager (FMI™) measures electrical conductivity images of the borehole wall and the borehole diameter with a two-axis caliper to evaluate geologic bedding and fracturing, including strike and dip of these features, fracture apertures, and rock textures.

Additionally, a calibrated natural gamma tool was used to record gross natural gamma-ray activity with each logging method (except the NGS™ run) to correlate depth runs between each of the surveys conducted.

The Schlumberger interpretive logging report and the geophysical logs, compiled as a montage, can be found as Appendix B (compact disc included). Additionally, an abstract of Schlumberger's report is presented in Appendix B on pages B-1 and B-2.

6.0 LITHOLOGY AND HYDROGEOLOGY

A preliminary assessment of the hydrogeologic features encountered during drilling operations at R-26 is presented below. Groundwater occurrences are discussed based on drilling evidence, open-hole video logging, and geophysical logging data. LANL EES-6 staff provided preliminary geologic contacts.

6.1 Stratigraphy and Lithologic Logging

Rock units and stratigraphic relations, interpreted primarily from visual examination of rock core, sampled drill cuttings, and geophysical data, are briefly discussed in order of younger to older occurrence. These interpretations may be revised upon further analysis of petrographic, geochemical, mineralogical, and geophysical data. A lithology log for the R-26 borehole is provided in Appendix D.

Alluvium (0 to 60 ft bgs)

Core samples indicated that unconsolidated alluvium was intersected in R-26 from ground surface to approximately 60 ft bgs. This interval is made up of clastic sediments, including tuffaceous silty sands and gravels as well as weathered boulders and blocks of indurated ash flow tuff. The sedimentary constituents are likely derived from the Tshirege Member of the Bandelier Tuff and Tschicoma dacite lavas.

Bandelier Tuff (60 to 955 ft bgs)

The Bandelier Tuff is locally represented in borehole R-26 in the interval from 60 to 955 ft bgs by the Tshirege (Qbt) and Otowi Members, including the Guaje Pumice Bed at the base of the section. An unusually thick section of the Cerro Toledo interval was identified between the Tshirege and Otowi Members from 472 to 865 ft bgs.

Ash flows of the Tshirege Member of the Bandelier Tuff (60 to 472 ft bgs)

Rhyolitic ash flows of the Tshirege Member have been divided into four separate cooling units in the general region of the Pajarito Plateau (Broxton and Reneau, 1995). The drilled R-26 section from 60 to 472 ft bgs is interpreted to represent, in descending order, Units 4, 3t, 3, 2, and 1v. Unit 1g, which is normally present at the base of the Tshirege Member, is absent at R-26. The tuff section is locally typified by strong welding that is characteristic of ash flows occurring in the western part of the plateau.

Unit 4 was intersected from 60 to 120 ft bgs. Core and cuttings samples indicate that Unit 4 is comprised of abundant sanidine and quartz phenocrysts, typically making up 20 to 40% of the sample by volume, and up to 30% pumice lapilli enclosed in a matrix of reddish fine vitric ash. Volcanic lithic fragments (i.e., xenoliths) are locally present in abundances of 1 to 2% by volume. Welding is characterized as weak near the top, possibly due to the effects of weathering, but increases significantly toward the base of the interval.

Units 3t and 3 are represented in the R-26 section from 120 to 300 ft, and from 300 to 365 ft bgs, respectively. Cuttings samples from Unit 3t, a unit having chemical properties transitional between Qbt 3 and Qbt 4, are represented by chips of strongly welded tuff that are typically made up of quartz, sanidine, and minor ferromagnesian minerals (possibly pyroxene), as much as 3% small intermediate volcanic xenoliths, and a well-indurated matrix of light to medium gray vitric ash. Unit 3 appears to be a strongly welded crystal-rich tuff with characteristics that are visually similar to those of Unit 3t.

Cuttings from Unit 2, intersected in R-26 from 365 ft to 465 ft bgs, are made up of light brownish gray, indurated, strongly welded tuff. Crystals (commonly as much as 50% by volume) of sanidine, quartz, and ferromagnesian minerals and small (up to 5 millimeters) felsic and

intermediate volcanic lithics (up to 5% by volume) are enclosed in an aphanitic matrix of vitric ash.

Unit 1v occurs from 465 to 472 ft bgs. It is defined by a downward decrease in bulk density toward the base of the Tshirege Member. The contact between the strongly welded tuffs of Unit 2 and the less welded tuffs of Unit 1v is gradational.

Cerro Toledo Interval (472 to 865 ft bgs)

Volcaniclastic sedimentary and tephra deposits of the Cerro Toledo interval regionally separate the Tshirege and Otowi Members of the Bandelier Tuff. Geophysical logs suggest that the Cerro Toledo interval occurs in borehole R-26 from 472 to 865 ft bgs. This unexpectedly thick interval of tuff and volcaniclastic sediments appears to represent a filled paleo-channel incised into the underlying Otowi Member. Cuttings indicate that this volcaniclastic deposit is locally made up of silty to clayey sands and gravels. Detrital constituents comprised of hornblende-biotite dacite, rhyolite, andesite, indurated welded tuff, pumice fragments, and local vitrophyre are present in varying abundances throughout the interval.

Ash flows of the Otowi Member of the Bandelier Tuff (865 to 930 ft bgs)

Ash flows of the Otowi Member of the Bandelier Tuff are recognized in the interval from 865 ft to 930 ft bgs. Cuttings show that the Otowi Member is strongly pumiceous and poorly welded. Pumice fragments in chip samples are vitric and white or orange-brown as a result of iron-oxide staining. Volcanic lithic fragments represent xenoliths of dacite, andesite, rhyolite, and vitrophyre. Free quartz and sanidine crystals are generally abundant in the fine-grained fraction of the sieved cuttings samples.

Guaje Pumice Bed of the Otowi Member (930 to 955 ft bgs)

The Guaje Pumice Bed (Qbog) was encountered in borehole from 930 to 955 ft bgs. Cuttings from this interval indicate the unit is nonwelded and generally pumice-rich. Samples from this unit are typically made up of pumice, quartz, and sanidine crystals, and lithic fragments of intermediate volcanic composition.

Puye Formation (955 to 1490.5 ft bgs)

Fanglomerates of the Puye Formation were intersected in the R-26 interval from 955 ft to the borehole TD at 1490.5 ft bgs. The FMI log (Appendix D) indicates that the Puye Formation largely consists of clast- and matrix-supported conglomerate, with clasts commonly 0.5 to 1.5 ft in diameter. Clasts in these sediments are predominantly made up of detritus, likely derived from volcanic rocks of the Tschicoma Formation, including porphyritic dacite, rhyodacite, rhyolite, andesite, and vitrophyre. Minor occurrences of welded tuff and chert are locally present in the interval.

6.2 Groundwater Occurrence and Characteristics

Perched groundwater saturation zones above the regional aquifer were predicted to occur in R-26 within either the Cerro Toledo interval or the Otowi Member of the Bandelier Tuff, or between 700 and 900 ft bgs. However, during Phase I coring, a shallow zone of perched saturation was first observed at 240 ft bgs within the Tshirege Member of the Bandelier Tuff and before

encountering refusal at 250 ft bgs. A video camera survey of the open corehole indicated that water was emanating from a depth of 150 to 180 ft bgs.

Two temporary piezometers were installed side by side in the corehole to collect possible perched groundwater data from two target intervals: an upper screen from 150 ft to 180 ft bgs (piezometer 2) and a lower screen from 230 ft to 250 ft bgs (piezometer 1). On November 25, 2003, approximately 1 month after the installation of the piezometers, the DTW was measured at 173 ft bgs in piezometer 2; however, no water was present in piezometer 1.

An intermediate perched saturated zone was indicated by a sustained increase in flow from the discharge line during Phase II drilling in the Cerro Toledo interval, at approximately 650 ft bgs. A groundwater level measurement of 604 ft bgs was observed on September 21, 2003, when the depth of the borehole was at 720 ft bgs.

The chemical indicator potassium bromide (KBr) was added to drilling fluids when the borehole had been advanced to 200 ft bgs. Monitoring input and output concentrations showed that KBr concentrations were at fairly consistent levels from 300 to 600 ft bgs. KBr concentrations began to decrease significantly at 650 ft bgs, reflecting dilution of the drilling fluids by formational water entry into the borehole. Due to the presence of significant quantities of groundwater in the borehole, KBr monitoring was suspended when the borehole was advanced to 1005 ft bgs.

The processed geophysical logs indicate high water-filled porosity within the porous, glassy tuff/pumice and volcaniclastic sediment sections in R-26 from 575 to 955 ft bgs. However, the processed logs, by themselves, indicate that most of this interval is not fully saturated with water. A water level between 865 ft and 885 ft bgs made when the bottom screen was isolated during hydrologic testing is consistent with these observations. The total porosity in the glassy tuffs/pumice and volcaniclastic sediments, estimated from the elemental analysis (ELAN) integrated log analysis, ranges from 40% to over 50% of total rock volume, with water saturations of generally 50–80%.

The estimated moveable water content is generally high across this water-rich glassy tuff/pumice and volcaniclastic sediment interval ranging from 5 % to 25% of total rock volume. Although much of the 575 to 955 ft bgs interval may not be fully saturated with water, the high total and moveable water content suggests that, in general, the water is quite mobile. The water in this interval is likely connected to the saturated Puye Formation below.

There is strong evidence from the processed geophysical logs that the bottom of Well R-26, below the Guaje Pumice Bed (955 ft bgs) in the Puye Formation, lies within the regional aquifer. The estimated pore volume water saturation (fraction of the total pore volume containing water) computed from the ELAN analysis is over 85% from 954 ft bgs to the bottom of the log interval at 1484 ft bgs. The estimate is even higher when computed directly from bulk density and ELAN water-filled porosity for a grain density range of 2.45 grams per cubic centimeter (g/cc) to 2.65 g/cc, ranging from 90% to a consistent 100%.

The estimated moveable water generally varies from 7% to 15% of total rock volume across the saturated interval. The hydraulic conductivity estimated from the ELAN integrated log analysis (from the CMR moveable water measurement) generally ranges from 0.1–1 gal./day/ft^2. However, in the intervals from 1,100 to 1,108 ft bgs and 1,186 ft to 1,200 ft bgs the hydraulic conductivity is estimated to be over 3 gal./day/ft^2.

7.0 WELL DESIGN AND CONSTRUCTION

R-26 was installed as a hydrogeologic characterization and groundwater monitoring well as part of LANL's Groundwater Protection Program and in accordance with the "Hydrogeologic Workplan" (LANL 1998). On October 17, 2003, KA received final construction specifications for R-26 following approval of the design by DOE, LANL, and NMED. Well installation activities were performed from October 17 to 21, 2003. Sections 7.1 and 7.2 describe the main aspects of well design and construction, respectively. Section 7.3 discusses the completion of two piezometers in the corehole.

7.1 Well Design

Well design was undertaken jointly by DOE, LANL, and KA, and NMED approved the well design before well construction. Data from geophysical logs, borehole video logs, borehole geologic samples, field water level and water quality measurements, and field observations were analyzed to determine the appropriate intervals to be screened. Two well screen intervals were specified for R-26: (1) an upper screen to monitor groundwater associated with an intermediate zone of perched saturation and (2) a lower screen to monitor potential contaminants in the uppermost productive zone of the regional aquifer. The planned well design assumed a typical two-section, rod-based screen length of approximately 23 ft. However, a two-section, pipe-based screen with a perforated length of 18 ft was used for the upper screened interval. In addition, the blank casing length between the two screened intervals is approximately 4 ft shorter than the design due to the limitations of available casing joint lengths. The planned design and actual constructed screen locations for R-26 are listed in Table 7.1-1.

Table 7.1-1
Summary of Well Screen Information for Well R-26

Screen No.	Planned Depth (ft bgs)[a]	Actual Depth (ft bgs)[a]	Geologic/Hydrologic Setting
1	643–666	651.8–669.9	Intermediate perched zone in the Cerro Toledo interval of the Bandelier Tuff
2	1422–1445	1421.8–1445	Regional zone of saturation in the Puye Formation

[a] These intervals represent the perforated area of the screen.

7.2 Well Construction

R-26 was constructed of 4.46-in. inner diameter (ID)/5.0-in.-OD, type A304 stainless-steel casing fabricated to American Society for Testing and Materials (ASTM) A312 standards. The upper screen was constructed of two 10-ft joints of wire-wrapped 5.53-in.-OD, pipe-based 0.010-in. slotted well screens. The lower screen was constructed using 5.27-in.-OD, rod-based 0.020-in. slotted screens. Stainless-steel casing was installed below the lower screen to provide a 34-ft-long well sump. Figure 7.2-1 is a schematic as-built diagram of the completed R-26 well.

External couplings, also of type A304 stainless steel fabricated to ASTM A312 standards, were used to connect individual casing and screen joints. Centralizers were installed above and below

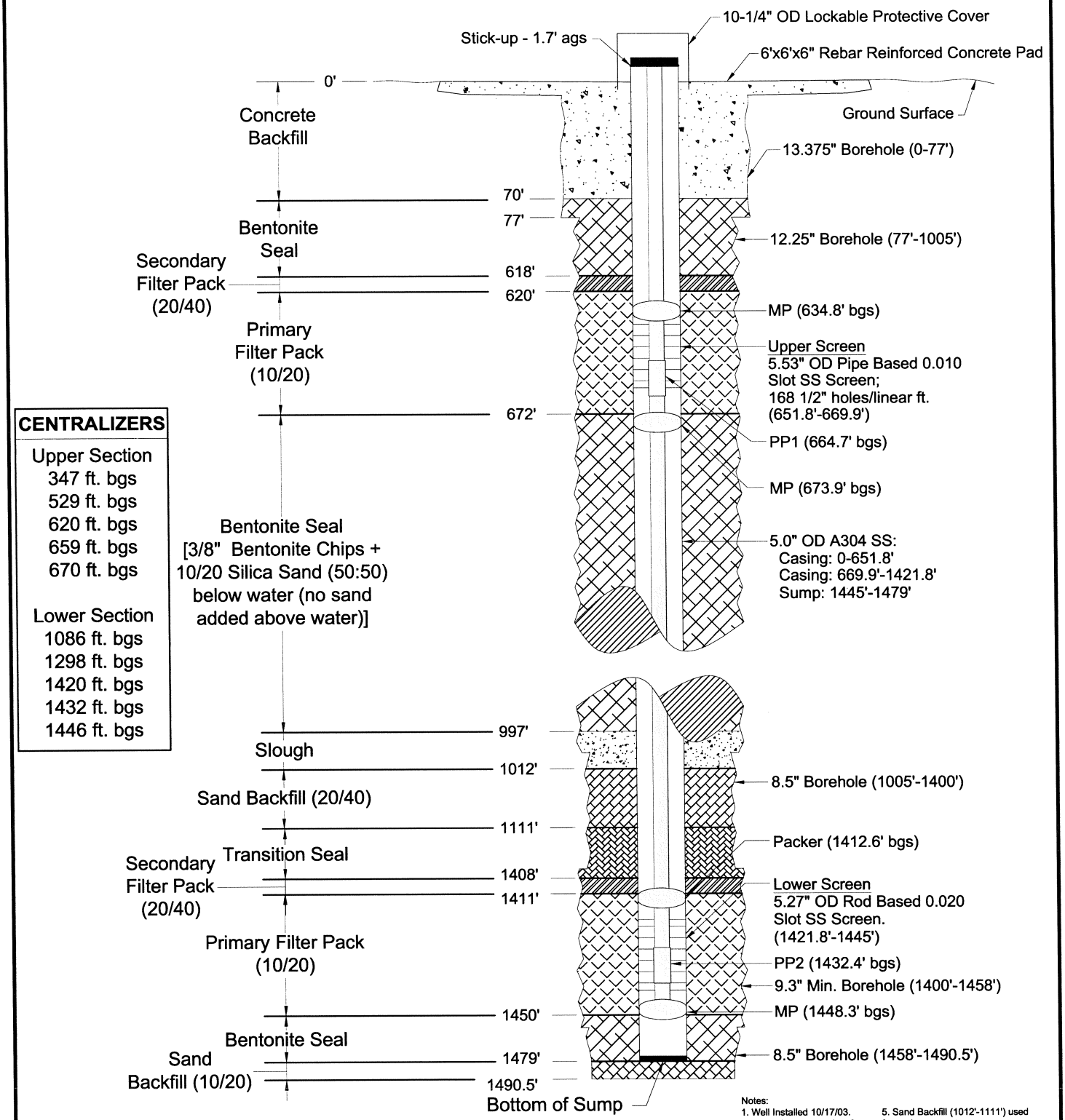

Notes:
1. Well Installed 10/17/03.
2. ags - above ground surface.
3. bgs - below ground surface.
4. Screen depths are slotted intervals.
5. Sand Backfill (1012'-1111') used for casing support.
6. Borehole reamed 1400'-1458'.
7. Drill Casing removed prior to well installation
8. Westbay installed: 7/16/05
9. MP - Packer / PP - Port

KLEINFELDER		WELL SCHEMATIC DIAGRAM Well R-26 Los Alamos National Laboratory Los Alamos, New Mexico	FIGURE 7.2-1
Drawn By: C. Landon	Date: January 2005		
Project No.: 37151	Filename: Figure 7.2–1.dwg		
Scale: not–to–scale	Revision: 0		

© Kleinfelder, Inc. 2005

each joint of well screen. In addition, one centralizer was placed approximately 100 ft above each screen interval. Centralizers for R-26 are located at 347 ft, 529 ft, 620 ft, 659 ft, 670 ft, 1,086 ft, 1,298 ft, 1,420 ft, 1,432 ft, and 1,446 ft bgs (Figure 7.2-1).

The casing and screens were factory-cleaned before being shipped and delivered to the site. Additional decontamination of the stainless-steel components was performed onsite using a high-pressure steam cleaner and scrub brushes. Annular fill was placed in casing/borehole annulus through use of a tremie pipe. Well installation occurred on October 17, 2003, and backfilling was completed on October 21, 2003.

7.2.1 Steel Installation

R-26 well steel installation consisted of connecting joints of stainless-steel casing and screen sections by means of external threaded couplings. The bottom of the well was set at 1,479 ft bgs. Figure 7.2-1 shows the as-built well configuration and indicates the depths of the various well components as measured from ground surface.

7.2.2 Annular Fill Placement

Placement of annular fill consisted of using a 2.5-in. OD steel tremie pipe to deliver various materials to specified backfill intervals. Filter packs across screened intervals consisting of silica sand were generally transported using municipal water and placed in the annulus as a fluid slurry. Bentonite materials were placed between screened intervals to seal the annular space and to isolate the water-bearing zones.

The bottom of the open R-26 borehole was measured at 1,490.5 ft bgs before beginning backfill activities. Well casing and screens were lowered in the hole, and the bottom of the sump was positioned at 1,479 ft bgs. The lower part of the borehole was backfilled with 10/20 silica sand from 1,490.5 ft (TD) to 1,479 ft bgs, and bentonite chips were then tremied in the annulus from the top of the sand to 1,450 ft bgs to create a seal around the well sump. A primary filter pack consisting of 10/20 silica sand was placed across the lower screen in the annular interval from 1,450 to 1,411 ft bgs, and a secondary filter pack of 20/40 silica sand was placed above the screen from 1,411 to 1,408 ft bgs. A swabbing tool was run through the screened interval to settle the primary filter pack before placement of the secondary filter pack. Next, a transition seal was placed above the secondary filter pack in the annular space between 1,408 and 1,111 ft bgs. The transition seal consisted of a 50:50 mixture of 10/20 sand and bentonite chips.

To provide casing support, 20/40 silica sand backfill was placed above the transition seal from 1,111 to 1,012 ft bgs. After placing the transition seal, 15 ft of formation material was sloughed into the annulus. A bentonite seal was installed above the backfill sand from 997 to 672 ft bgs. A primary filter pack consisting of 10/20 silica sand was then tremied across the upper screen interval from 672 to 620 ft bgs, followed by a secondary filter pack of 20/40 silica sand from 620 to 618 ft bgs. A swabbing tool was run through the screened interval to settle the primary filter pack before placement of the secondary filter pack. A final bentonite seal was then placed above the secondary filter pack from 618 to 70 ft bgs. Concrete backfill, consisting of 2,500 pounds per square inch (psi) concrete with 4 percent bentonite, was placed from 70 ft bgs to near the surface. Approximately 16,000 gal. of water were used during well completion. The quantities of annular fill materials used in the completion of R-26 are presented in Table 7.2-1.

Table 7.2-1
Annular Fill Materials Used in Well R-26

Function/Material	Amount	Unit[a]	Mix
Backfill: 10/20 sand	10	Bag	–
Seal: ⅜-in. bentonite chips	15.5	Bag	–
Primary filter pack, lower screen: 10/20 sand	15.5	Bag	–
Secondary filter pack, lower screen: 20/40 sand	1	Bag	–
Transition seal: 10/20 sand and bentonite	65 sand/34 bentonite	Bag/5-gal. bucket	50:50
Backfill: 20/40 sand	56	Bag	–
Seal: ⅜-in. bentonite chips	5.875	Bag	–
Primary filter pack, upper screen: 10/20 sand	70	Bag	–
Secondary filter pack, upper screen: 20/40 sand	5	Bag	–
Seal: ⅜-in. bentonite chips	7.75	Supersack	–
Surface seal: concrete backfill	2	Cubic Yards	2,500 psi concrete with 4% bentonite
Potable water	15,978	Gallons	–

[a] Sand bag = 45 lb each, bentonite bag/bucket = 50 lb ea, bentonite supersack = 3,000 lb ea (equivalent to 3 yd^3)
Sand bag = 0.5 ft^3 each, bentonite bag/bucket = 0.67 ft^3, bentonite supersack = 41.4 ft^3

7.3 Piezometer Construction

Two piezometers were installed in the open 8½-in. R-26 corehole to monitor two potential zones of perched saturated water observed during Phase I drilling. Piezometer construction was performed on October 1, 2003. Piezometers 1 and 2 were completed using 1-in. OD, Schedule 40 flush-jointed polyvinyl chloride (PVC) casing and 0.010-in. slotted screen. PZ-1 was screened across the interval from 230 to 250 ft bgs. A filter pack of 10/20 silica sand was tremied across the screened interval from 250 to 225 ft bgs, and a bentonite seal was then placed from 225 to 185 ft bgs. PZ-2 was constructed above the bentonite seal with its screen positioned from 150 to 180 ft bgs and sump from 180 to 185 ft bgs. The PZ-2 filter pack of 10/20 silica sand was installed from 185 to 145 ft bgs, and a bentonite seal was placed from 145 to 60 ft bgs. The annular interval from 60 to 2 ft bgs was backfilled with bentonite, and concrete was poured from 2 ft bgs to ground surface. A total of 14 bags of 10/20 silica sand and 41.5 bags of bentonite chips were used in constructing the two piezometers. Figure 7.3-1 is a schematic as-built diagram of these piezometers.

8.0 WELL DEVELOPMENT AND HYDROLOGIC TESTING

Well development activities at R-26 were conducted from October 18, 2003, to November 17, 2003. Well development procedures, described below, included airlifting, well-screen swabbing,

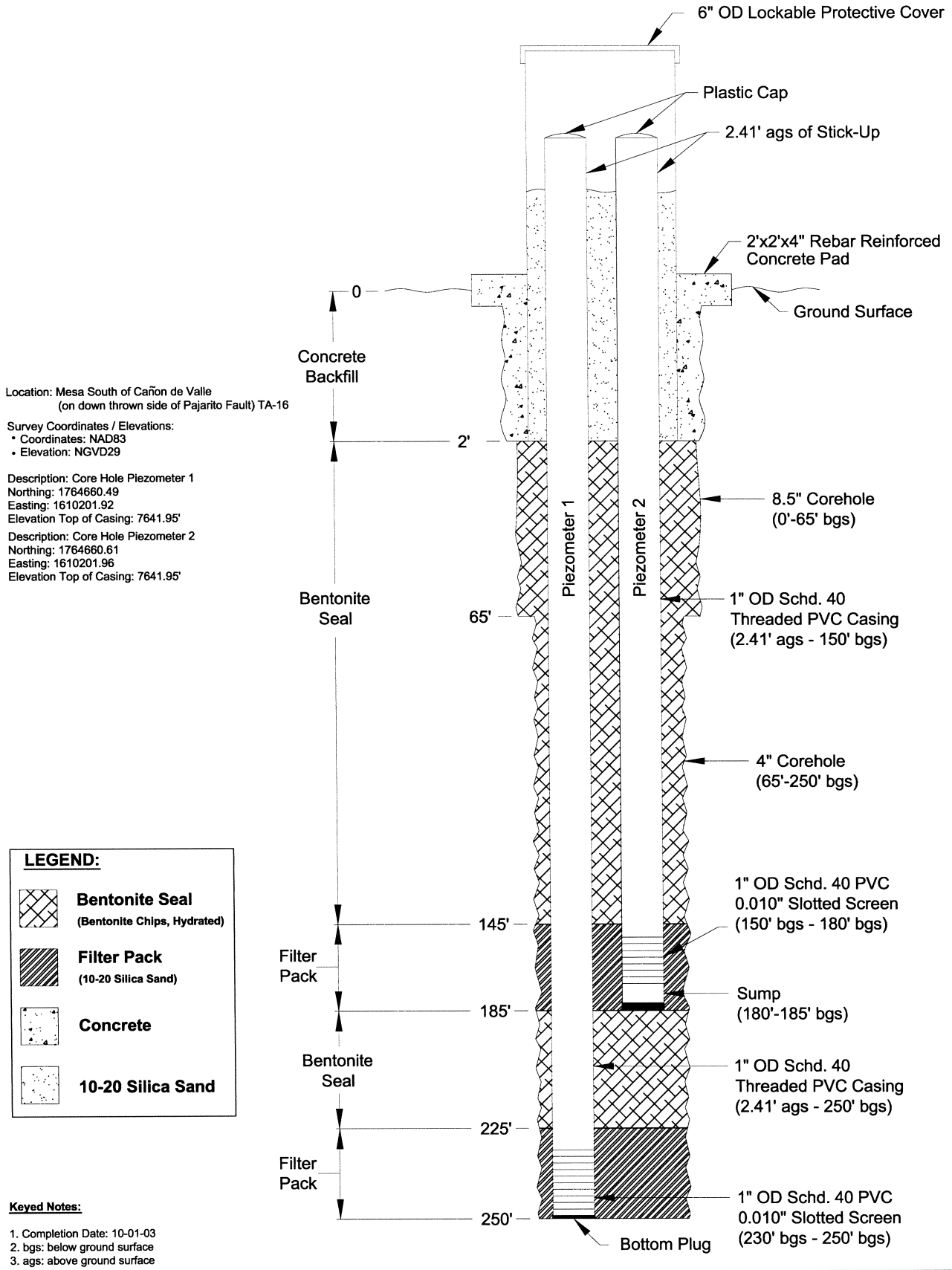

Location: Mesa South of Cañon de Valle
(on down thrown side of Pajarito Fault) TA-16

Survey Coordinates / Elevations:
- Coordinates: NAD83
- Elevation: NGVD29

Description: Core Hole Piezometer 1
Northing: 1764660.49
Easting: 1610201.92
Elevation Top of Casing: 7641.95'

Description: Core Hole Piezometer 2
Northing: 1764660.61
Easting: 1610201.96
Elevation Top of Casing: 7641.95'

LEGEND:

- **Bentonite Seal** (Bentonite Chips, Hydrated)
- **Filter Pack** (10-20 Silica Sand)
- **Concrete**
- **10-20 Silica Sand**

Keyed Notes:

1. Completion Date: 10-01-03
2. bgs: below ground surface
3. ags: above ground surface

KLEINFELDER

Drawn By: C. Landon	Date: January 2005
Project No.: 37151	Filename: Figure 7.3-1.dwg
Scale: not-to-scale	Revision: 4

SCHEMATIC DIAGRAM
Corehole Piezometers Well R-26
Los Alamos National Laboratory
Los Alamos, New Mexico

FIGURE
7.3-1

© Kleinfelder, Inc. 2005

surging, bailing, and pumping, and also, during well construction, surging was done to encourage settlement of the filter packs. A total of 55,294 gal. of water were removed during well development and hydrologic testing. All produced fluids were stored in lined pits and storage tanks until discharge approval was received from NMED.

Hydrologic testing consisted of two constant rate pumping tests and one falling head test. The tests were conducted from February 16 to February 20, 2004. Results from these tests are in Appendix A of the Addendum to this report (Kleinfelder 2004).

8.1 Well Development

Well development at R-26 was performed in three stages. The initial stage consisted of airlifting to remove excess drilling fluids and to allow for formation water to recharge the well. The second stage consisted of bailing to remove solid materials from the well, followed by swabbing and surging the screened intervals to draw fine sediment from the constructed filter pack. The final stage consisted of lowering a submersible pump into the well and drawing the pump repeatedly across the screened intervals.

The efficiency of well development was monitored by measuring field water-quality parameters (pH, temperature, specific conductance, and turbidity). To monitor progress during each development stage, samples of water were periodically collected and parameter measurements were recorded in the field log book and on field forms. The field log book and forms are on file at KA's Albuquerque office, and copies will be included in the LANL record project file.

The primary objective of well development was to remove suspended sediment from the water until turbidity was less than 5 NTUs for three consecutive samples. Similarly, other measured parameters were required to stabilize before terminating development procedures. In addition, total organic carbon (TOC) samples were collected and analyzed toward the end of development. The target level for TOC was 2 parts per million. Table 8.1-1 presents the final water quality parameter data values measured during the well development process.

Preliminary bailing from the R-26 screened intervals and sump was performed to remove bentonite materials, drilling fluids, and formation sands and fines that had been introduced into the well during drilling and installation. Bailing activities were conducted by WDC using a 5-gal. capacity, 3-in.-diameter by 10-ft-long stainless-steel bailer. Bailing activities continued until water clarity improved. Bailing was followed by swabbing across each screened interval to enhance filter-pack development. A swabbing tool consisting of a 4.25-in.-diameter, 1-in.-thick rubber disc attached to the drill rod was lowered into the well and was drawn repeatedly across the screen interval for approximately one hour. Water turbidity was not measured during the bailing and swabbing process.

Table 8.1-1
Development and Testing of Well R-26

Method	Water Removed (gal.)	pH	Temperature (°C)	Specific Conductance (µS/cm)[a]	Turbidity (NTU)
Airlifting	3,872	NM[b]	NM	NM	NM
Bailing/Swabbing Screens	123	7.92	12.7	146	NM
Pumping Upper Screen	5,899	NM	16.8	80	4.87
Pumping Lower Screen	25,210	NM	17.2	80	4.58
Sump	5,965	NM	NM	NM	NM
Hydrologic Testing	14,225	NM	NM	NM	NM
Total	55,294				

[a] Specific conductance is reported in microsiemens per centimeter
[b] NM = Not measured

Following swabbing, pump development procedures were applied to the screened intervals (651.8 to 669.9 ft bgs and 1421.8 to 1445 ft bgs) using a 10 horsepower, 4-in. Grundfos submersible pump. The pump intake was lowered to each screened interval and was cycled on at a nominal rate of 6.0 gal. per minute. The pump intake was then drawn across the length of each screened interval to remove remaining fines from the filter pack and adjacent formation. While pumping, water samples were collected for parameter measurements. Once the target water quality parameters were reached (<5 nephelometric turbidity units [NTUs]), the pump was tripped out and the packer, which isolates the screens from one another, was placed above the pump. Initially, the upper screen was pumped with the packer located below the pump. The lower screen and sump were then pumped. Pump development was then completed with additional pumping of the upper screen.

Figure 8.1-1 illustrates the effects of well development in the upper screen on measured field parameters. Figure 8.1-2 illustrates the effects of well development in the lower screen on measured field parameters. R-26 was considered fully developed when the limiting values of acceptability were met. The primary acceptance criterion was that turbidity be less than 5 NTUs.

From July 10 to July 14, 2004, additional well development was conducted at well R-26 prior to the installation of the Westbay Multi-Port (MP) sampling system. A 10 horsepower, 4-in. Grundfos submersible pump was used to pump the well from 1,209 and 1,467 ft bgs prior to sampling. The upper depth was pumped continuously between 10:45 A.M. on July 11, 2004 and 11:57 A.M. on July 13, 2004 and a total of 41,818 gallons (gal.) of water were removed. The lower depth was pumped between 2:40 P.M. and 6:10 P.M. on July 13, 2004, and an additional 3,733 gal. of water were removed.

After the additional well development, a downhole video log was run to observe casing conditions and water clarity prior to the installation of the sampling system. Appendix A, Borehole Video

Logs, contains a DVD of the R-26 borehole video log as well as the corehole video log from the shallow corehole at R-26.

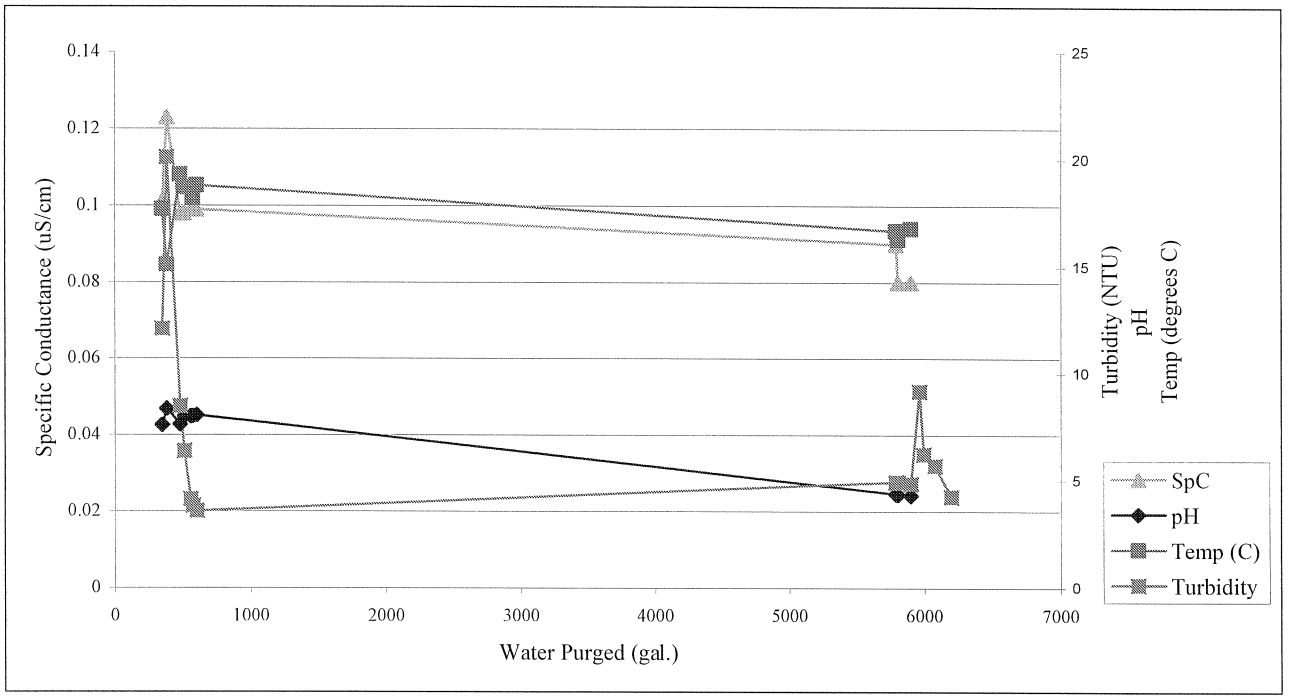

Figure 8.1-1. Effects of Pump Development of the Upper Screen on Water Quality Parameters at Well R-26

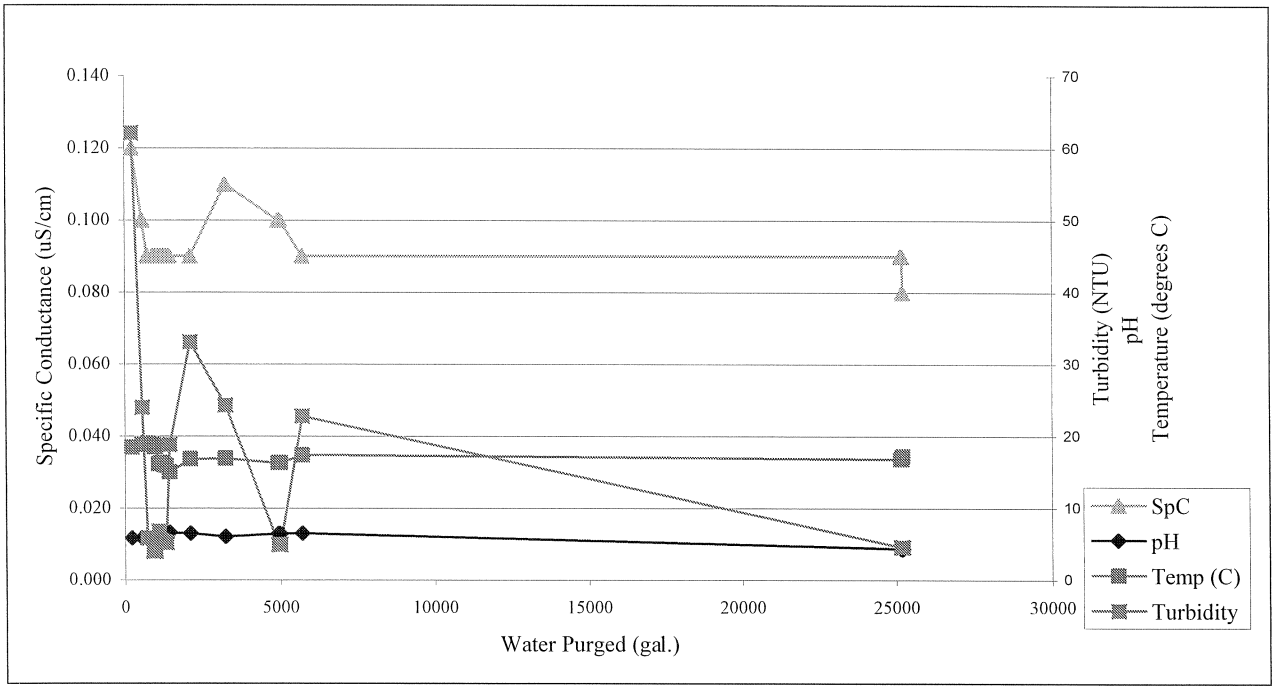

Figure 8.1-2. Effects of Pump Development of the Lower Screen on Water Quality Parameters at Well R-26

8.2 Hydrologic Testing

Constant-rate pumping tests and shut-in tests were conducted on the two water-bearing zones in R-26 from February 16, 2004, and March 6, 2004. The purpose of the tests was to determine the hydraulic properties and lateral extent of the two water-bearing zones encountered in R-26. One aquifer test was conducted on the upper intermediate zone, with a screened interval from 651.8 to 669.9 ft bgs, and two tests were conducted on the lower regional zone, screened between 1421.8 to 1445 ft bgs.

The average hydraulic conductivity of the upper zone, in the Cerro Toledo interval, adjacent to the borehole, is approximately 1.7 ft per day. Further from the borehole, average hydraulic conductivities ranged between 2.4 and 3.7 ft per day, depending on the degree of anisotropy. A steep vertical gradient was observed over this interval, suggesting that values in the upper end of the range may be most reliable. The results of the aquifer test on the upper interval indicate that it is limited in areal extent and not well connected to the lower regional aquifer.

The aquifer tests revealed that the lower water-bearing zone, in the Puye Formation fanglomerate, is a much less permeable zone with an average hydraulic conductivity of 0.0022 ft per day, with a lower bound of 0.002 ft per day. The complete report summarizing these tests is included as a compact disc (CD) in Appendix E.

8.3 Dedicated Sampling System Installation

Following final well development activities, a Westbay Instruments, Inc., multi-port sampling system was installed in R-26 to isolate and allow discrete sampling of the two water-bearing zones. Appendix F to this report contains a CD with a PDF file of the complete Installation Report compiled by Westbay Instruments, Inc.

8.4 Wellhead Completion

The surface completion for R-26 involved placing a reinforced (2,500 psi) concrete pad, 6-ft wide by 6-ft long by 6-in. thick on December 19, 2004. A brass survey pin was installed in the northwest corner of the pad. A 10.75-in. steel casing with locking lid protects the well riser. The pad was designed to be slightly elevated, with base course graded up around the pad to allow for drainage. Bollards were installed during site restoration activities.

Some fissures developed in the concrete wellhead surface pad that was installed, necessitating repair and refurbishment of the concrete pad. The refurbishment was completed on October 25, 2004. The specifications for the wellhead pad are the same as those for the previous wellhead.

8.5 Geodetic Survey

The refurbished wellhead pad was resurveyed on October 27, 2004. The brass cap monument in the concrete pad and the top of the stainless-steel well casing were resurveyed; the new coordinates for these features are shown in Table 8.5-1.

Table 3.5-1

Coordinates for New Wellhead Features at R-26 and Piezometers

Description	Northing[a]	Easting[a]	Elevation[b]
Brass cap in R-26 Pad	1764721.12	1610267.33	7641.69
Top of stainless-steel casing	1764721.35	1610269.56	7643.33
PZ 1 (185 ft TD)	1764660.49	1610201.92	7641.95[(c)]
PZ 2 (250 ft TD)	1764660.61	1610201.96	7641.95[(c)]

[a] Coordinates are NM State Plane Grid, Central Zone, NAD83, determined from LANL monument A1601with static Global Positioning Satellite observation.

[b] Feet above mean sea level relative to the National Geodetic Vertical Datum of 1929.

8.6 Site Restoration

On December 12, 2003, a Notice of Intent (NOI) to discharge drilling and development water from the borehole-cuttings containment area at R-26 was forwarded, via e-mail, to Mr. Curt Frishkorn with the NMED. Approval to discharge drilling and development water was received via e-mail from the NMED on January 14, 2004. A copy of the e-mail received from the NMED is in Appendix G.

Fluids produced during drilling and development were sampled in accordance with the NOI to Discharge, Hydrogeologic Workplan Wells and filed with the NMED. Results of the sampling data were reviewed by the NMED and LANL, and discharge was approved. A copy of the sample analysis is included in Appendix A of the Addendum to this report (Kleinfelder 2004).

Water from the borehole-cuttings containment area has been land-applied in the area of the general drill site using a 2,000-gal. capacity water truck. Silt fencing and straw bales have been left in place to minimize possible sediment impacts from future precipitation.

Site restoration activities included removing the polyethylene liner and borehole cuttings from the borehole-cuttings containment area, removing the containment area berms, and backfilling and grading the containment area. The cuttings were thinly spread onsite after obtaining NMED-approval.

The former drill site was graded, seeded with native vegetation, and mulched. Native vegetation has been re-established with 70% coverage. The Best Management Practices for the site, per the National Pollution Discharge Elimination System permit, included temporary site fencing to minimize silt runoff from the site. DOE filed a Notice of Termination on October 29, 2004 and the temporary site fencing to control silt runoff was removed on November 14, 2004.

9.0 DEVIATIONS FROM THE R-26 SAP

Appendix H compares the actual characterization activities that were performed at R-26 with the planned activities described in the "Hydrogeologic Workplan" (LANL 1998, 59599) and the R-26 SAP (LANL 2003, 03-4782. The main deviations from planned activities are summarized below:

- Planned depth – the SAP stated that the approximate depth of the well would be 1414 ft bgs. The completed borehole TD was 1490.5 ft bgs to ensure that the top of the regional aquifer was penetrated.
- Number of core and cuttings samples collected for contaminant analysis – up to 15 samples from the unsaturated zone and two samples each from saturated zones were planned for as specified in the R-26 SAP; 13 were actually collected. Use of drilling fluids precluded the collection of cuttings for contaminant characterization within the zones of saturation.
- Piezometer installation – piezometer installation was not specified in the SAP. Two temporary piezometers were installed in the corehole to monitor perched water conditions. Details about piezometer installation are presented in Section 7.3.
- Drilling methods – The borehole was reamed across the lower screen interval to increase the diameter of the hole.

10.0 ACKNOWLEDGEMENTS

D. Schafer of David Schafer and Associates contributed the hydrologic testing section of this report.

E. Tow, P. Schuh, and R. Lawrence of Tetra Tech EM, Inc., Albuquerque, NM, contributed to the preparation of this report.

EnviroWorks, Inc provided site preparation and restoration activities.

Lynn Engineering & Surveying, Inc. provided the final geodetic survey.

N. Clayton of Schlumberger provided processing and interpretation of borehole geophysical data.

P. Longmire of LANL contributed the geochemistry section of this report.

Tetra Tech EM, Inc. provided support for well site geology, sample collection, and hydrologic testing.

WDC Exploration & Wells provided rotary drilling services.

11.0 REFERENCES

Broxton, D.E. and S.L. Reneau, 1995. "Stratigraphic Nomenclature of the Bandelier Tuff for the Environmental Restoration Project at Los Alamos National Laboratory," LA-13010-MS, August 1995. (Broxton and Reneau 1995)

Kleinfelder, Inc., 2004. "Addendum to the Final Well R-26 Completion Report, Los Alamos National Laboratory," Los Alamos, New Mexico, November 29, 2004. (Kleinfelder 2004)

Los Alamos National Laboratory, July 2003. "Sampling and Analysis Plan for Drilling and Testing Characterization Wells R-2, R-4, R-11, and R-26," Los Alamos National Laboratory Report LA-UR-03-4782, Los Alamos, New Mexico. (LANL 2003)

Los Alamos National Laboratory, May 1998. "Hydrogeologic Work Plan," Los Alamos, New Mexico. (LANL 1998)

Los Alamos National Laboratory, January 1996. "Groundwater Protection Management Program Plan," Rev. 0.0, Los Alamos, New Mexico. (LANL 1996)

Kleinfelder, Inc., 2003. "Project Management Plan for DOE Monitoring Well Installation at Los Alamos National Laboratory," Los Alamos, New Mexico, October 29, 2003. (Kleinfelder 2003a)

Kleinfelder, Inc., 2003. "Final Contractor Quality Management Plan, Revision 1, DOE Monitoring Well Installation at Los Alamos National Laboratory," Los Alamos, New Mexico, November 24, 2003. (Kleinfelder 2003b)

Kleinfelder, Inc., 2003. "Site Specific Health and Safety Plan, Characterization Well R-26, DOE Monitoring Well Installation at Los Alamos National Laboratory," Los Alamos, New Mexico, September 16, 2003. (Kleinfelder 2003c)

Kleinfelder, Inc., 2003. "Drilling Plan – KADP for Characterization Wells R-2, R-4, R-11, and R-26, Final, DOE Monitoring Well Installation at Los Alamos National Laboratory," Los Alamos, New Mexico, June 25, 2003. (Kleinfelder 2003d)

Appendix A

Borehole Videos
(DVDs included)

TO VIEW THE VIDEO THAT ACCOMPANIES THIS DOCUMENT, PLEASE CALL THE HAZARDOUS WASTE BUREAU AT 505-476-6000 TO MAKE AN APPOINTMENT

Appendix B

Geophysical Logging Report and Montages
(CD included)

Schlumberger Water Services
February 2004

TABLE OF CONTENTS

1.0 SUMMARY 2
2.0 INTRODUCTION 4
3.0 METHODOLOGY 5
3.1 Acquisition procedure 5
3.2 Log Quality Control and Assessment 6
3.3 Processing Procedure 7
Environmental Corrections and Raw Measurement Reprocessing 7
Depth-Matching and Splicing 8
Integrated Log Analysis 9
4.0 RESULTS 11
Well Water Level 11
Regional Aquifer 11
Vadose Zone Perched Water 12
Geology 13
4.1 Summary Logs 16
4.2 Integrated Log Montage 20
Track 1–Depth 20
Track 2–Basic Logs 20
Track 3–Resistivity 20
Track 4–Porosity 21
Track 5–Density 21
Track 6–NGS Spectral Gamma 22
Track 7–CMR Porosity 22
Track 8 –Pore Size Distribution 23
Track 9–CMR T2 Distribution (Waveforms) 23
Track 10–CMR T2 Distribution (Heated Amplitude) 23
Track 11–CMR Hydraulic Conductivity 23
Track 12– FMI Image (Dynamic Normalization) 24
Track 13– FMI Bedding and Fractures 24
Track 14– FMI Image (Static Normalization) 24
Track 15– Fracture Aperture and High Resolution Porosity 24
Tracks 16 to 20– Geochemical Elemental Measurements 25
Track 21–ELAN Mineralogy Model Results (Dry Weight Fraction) 25
Track 22–ELAN Mineralogy-Pore Space Model Results (Wet Volume Fraction) 25
Track 23–Summary Logs 26
Track 24–Depth 27
5.0 REFERENCES 27

1.0 SUMMARY

This report describes the borehole geophysical logging measurements acquired in characterization well R-26 by Schlumberger, logged at two separate times – September and October 2003 – before well completion. The report (1) summarizes the technology, measurements, and procedures employed, and (2) presents the processed results from these measurements and discusses their interpretation. The logs were acquired in two runs at two separate times as the well was drilled in an effort to maximize the amount of open hole versus cased hole measurements. The September logging suite was acquired from 20 ft. to 990 ft. bgs, when the borehole was open (uncased) below 70 ft., drilled with 12.25 in. diameter bit size, and contained 13.375 in. outer diameter steel casing above 68 ft. (as measured by the logs). The October logging suite was acquired from 655 ft. to 1378 ft. bgs, when the borehole was open below 1005 ft., drilled with 8.5 in. diameter bit size, and contained 9.625 in. outer diameter freestanding steel casing above 1005 ft. (as measured by the logs).

The primary purpose of the geophysical logging was to characterize the geologic/hydrogeologic section intersected by the well with emphasis on determining regional aquifer groundwater level, perched groundwater zones, moisture content, capacity for flow, and the stratigraphy/mineralogy of geologic units. A secondary purpose of the geophysical logging was to evaluate the borehole conditions such as borehole diameter versus depth, deviation versus depth, and degree of drilling fluid invasion. These objectives were accomplished by measuring, nearly continuously, along the length of the well: (1) total and effective water-filled porosity and pore size distribution, from which an estimate of effective water hydraulic conductivity is made, (2) bulk density (sensitive to total water- plus air-filled porosity), (3) bulk electrical resistivity at multiple depths of investigation, (4) bulk concentrations of a number of important mineral-forming elements, (5) spectral natural gamma ray, including potassium, thorium, and uranium concentrations, (6) bedding and fracture orientation, fracture aperture, and geologic texture, (7) borehole inclination and azimuth, and (8) borehole diameter.

Preliminary results of these measurements were generated in the logging truck at the time the geophysical services were performed and are documented in field logs provided onsite. However, the measurements presented in the field results are not fully corrected for borehole conditions and are provided as separate, individual logs. The field results were reprocessed by Schlumberger to (1) correct/improve the measurements, as best as possible, for borehole/formation environmental conditions, (2) perform an integrated analysis of the log measurements so that they are all coherent, and (3) combine the logs in a single presentation, enabling integrated interpretation. The reprocessed log results provide better quantitative property estimates that are consistent for all applicable measurements, as well as estimates of properties that otherwise could not be reliably estimated from the single measurements alone (e.g. total porosity inclusive of all water and air present, water saturation, mineralogy).

The geophysical log measurements from Well R-26 provide good quality results that are consistent with each other through most of the borehole. The quality of some measurements was degraded across intervals where the borehole contains large washouts and/or rugose hole. The measurements most affected by the adverse borehole conditions were ones that have a shallow depth of investigation and require close contact to the borehole wall—the bulk density, photoelectric effect, and the porosity measurements. The greatest impact on the log processing was erroneously high estimated air-filled and/or water-filled porosity in the problem zones.

Through the integrated analysis and interpretation of all the logs, the individual shortcomings of the specific measurements are reduced. Thus, the integrated log analysis results (e.g. the optimized water-filled porosity log) are the most robust single representation of the geophysical log results—providing a wealth of valuable high resolution information on the geologic and hydrogeologic environment of the R-26 locale.

Important results from the processed geophysical logs in R-26 include the following:

1. The Puye Formation fanglomerate at the bottom of the well (955–1490.5 ft bgs) is likely fully saturated with water throughout. The porosity across this interval is mostly in the range of 20–30% of the total rock volume, although there are a number of zones with higher porosity. The most porous zones (in which the logs are not obviously affected by hole conditions) appear to be 1075–1108 ft and 1186–1200 ft, with porosity mostly ranging 30–40% and a peak of over 50% at 1102 ft. Both these zones have high moveable water content (effective porosity) of 15–20% of total rock volume.

2. The high porosity glassy tuff/pumice beds and volcaniclastic sediments of the Cerro Toledo interval and Otowi Member (472–955 ft bgs) lying above the Puye Formation are likely not fully saturated with water through most of the section, although they have very high water content (30–50% of total rock volume) from 570–955 ft. The general trend is an increase in water content with depth – culminating at 52% of total rock volume at the bottom of the Guaje Pumice Bed at 955 ft. The moveable water content is relatively high as well (5–25% of total rock volume, except 40% at the bottom of the Guaje Pumice Bed). Although much of the glassy tuff/pumice interval may not be fully saturated with water, the high total and moveable water content suggests that, in general, the water is quite mobile. Likely, water in this interval is connected (in a broad sense) to the saturated Puye Formation below.

3. Three heterogeneous fanglomerate-type beds within the Cerro Toledo interval are clearly delineated by the logs at 505–524 ft, 530–544 ft, and 779–828 ft bgs. These beds have significantly lower porosity (mostly 20–30% of total rock volume) than the surrounding sediments (mostly 40–50% of total rock volume). The processed logs indicate that some zones within these beds may be fully saturated with water – particularly the interval 780–827 ft – but the moveable water content is highly variable and mostly less than 5% of total rock volume.

4. The crystalline tuff beds (60–472 ft bgs) generally have very low porosity (10–20% of total rock volume) and water content (5–10%). Some zones within this interval appear to be fully saturated with water, but the low moveable water content (5% of total rock volume) likely limits the flow of this water. The total porosity above 134 ft appears to be much higher (35–45%).

5. Fractures were identified from the electrical image log (acquired across the interval 390–1390 ft) at 412 ft, 681 ft, 687 ft, 690 ft, 700 ft, 701 ft, 705 ft, 710 ft, 870 ft, 880 ft, 882 ft, 883 ft, 947.5 ft, 950 ft, 952 ft, sand 1363.5 ft. All are in the volcanic tuff sequence, except the deepest one is in the Puye Formation.

6. Clay-rich beds occur in the following zones: 1023–1026 ft, 1051–1053 ft, 1080–1114 ft, 1135–1143 ft, 1171–1177 ft, and 1187–1200 ft.

2.0 INTRODUCTION

Geophysical logging services were performed in characterization well R-26 by Schlumberger in September and October 2003, before initial well completion. The purpose of these services was to acquire in situ measurements that help characterize the borehole, near-borehole, and abutting geologic formation environment. The primary objective of the geophysical logging was to provide in situ evaluation of formation properties (hydrogeology and geology) intersected by the well. This information was (and is) used by scientists, engineers, and project managers in the Los Alamos Characterization and Monitoring Well Project to design the well completion, better understand subsurface site conditions, and assist in overall decision-making.

The primary geophysical logging services performed by Schlumberger in well R-26 were the

- Combinable Magnetic Resonance (CMR™) tool to measure the nuclear magnetic resonance response of the formation, which is used to evaluate total and effective water-filled porosity of the shallow formation and to estimate pore size distribution and in-situ hydraulic conductivity;
- Compensated Neutron Tool (CNT™) to measure volumetric water content of the formation, which is used to evaluate moist/porous zones;
- Triple detector Litho-Density (TLD™) tool to measure formation bulk density and photoelectric factor, which are used to estimate total porosity and lithology;
- Array Induction Tool, (AIT™) to measure formation electrical resistivity at five depths of investigation and borehole fluid resistivity, which is used to evaluate drilling fluid invasion into the formation (an indicator of relative permeability and water saturation), presence of moist zones far from the borehole wall, and presence of clay-rich zones;
- Formation Micro-Imager (FMI™) tool to measure electrical conductivity images of the borehole wall in fluid-filled open hole and borehole diameter with a two-axis caliper – used for evaluating geologic bedding and fracturing, including strike and dip of these features and fracture apertures, and rock texture;
- General Purpose Inclinometry Tool (GPIT™) to measure borehole deviation and azimuth in OH – used to evaluate borehole position versus depth and to orient FMI images;
- Natural Gamma Spectroscopy (NGS) tool to measure gross natural gamma and spectral natural gamma ray activity, including potassium, thorium, and uranium concentrations, which is used to evaluate geology/lithology, particularly the amount of clay and potassium-bearing minerals;
- Elemental Capture Spectroscopy (ECS™) tool to measure elemental weight percent concentrations of a number of elements – used to characterize mineralogy and lithology of the formation

In addition, calibrated gross gamma ray (GR) was recorded with every service except the NGS, for the purpose of depth matching the logging runs to each other. Table 2.1 summarizes the geophysical logging runs performed in R-26.

Table 2.1
Geophysical logging services, their combined tool runs and intervals logged, as performed by Schlumberger in borehole R-26

Date of Logging	Borehole Status	Run #	Tool 1	Tool 2	Tool 3	Depth Interval (ft)
28-Sept-2003	Open hole below 68 ft. Bit size of 12.25 in. Steel casing above 68 ft. Casing OD of 13.375 in.	1	TLD	CNT	GR	26–984 ft
Same	Same	2	NGS	AIT		20–990 ft
Same	Same	3	CMR	ECS	GR	58–988 ft
Same	Same	4	FMI	GPIT	GR	389–990 ft
14-Oct-2003	Open hole below 1007 ft. Bit size of 8.5 in. Steel casing above 1007 ft. Casing OD of 9.625 in.	5	TLD	CNT	GR	500–1482 ft
Same	Same	6	AITH	NGS		500–1484 ft
15-Oct-2003	Same	7	ECS	CMR	GR	500–1486 ft
Same	Same	8	FMI	GPIT	GR	1005–1388 ft

A description of these geophysical logging tools can be found on the Schlumberger website (http://www.hub.slb.com/index.cfm?id=id11618).

3.0 METHODOLOGY

This section describes the methods employed by Schlumberger for performed geophysical logging services in Well R-26, including the following stages/tasks:

- Measurement acquisition at the well site
- Quality assessment of logs
- Reprocessing of field data

3.1 Acquisition procedure

Once the well drilling project team notified Schlumberger that R-26 was ready for geophysical well logging, the Schlumberger district in Farmington, NM, mobilized a wireline logging truck, the appropriate wireline logging tools and associated equipment, and crew to the job site. Upon arriving at the LANL site, the crew completed site entry paperwork and received a site-specific safety briefing.

After arriving at the well site, the crew proceeded to rig up the wireline logging system, including:

- Parking and stabilizing the logging truck in a position relative to the borehole that is best for performing the surveys;

- Setting up a lower and an upper sheave wheel (the latter attached to, and hanging above, the borehole from the drilling rig/mast truck);
- Threading the wireline cable through the sheaves; and
- Attaching the appropriate sonde(s) for the first run to the end of the cable.

Next, pre-logging checks and any required calibrations were performed on the logging sondes and the tool string was lowered into the borehole. If any of the tools required active radioactive sources (in this case a neutron and gamma source for the CNT/ECS and TLD, respectively), just before lowering the tool string the sources were taken out of their carrying shields and placed in the appropriate tool source-holding locations using special source handling tools. The tool string was lowered to the bottom of the borehole and brought up at the appropriate logging speed as measurements were made. At least two logging runs (one main and one repeat) were made with each tool string.

Upon reaching the surface any radioactive sources were removed from the tools and returned to their appropriate storage shields, thus eliminating any radiation hazards. Any post-logging measurement checks were performed as part of log quality control and assurance. The tool string was cleaned as it was pulled out of the hole, separated and disconnected.

The second tool string was attached to the cable for another logging run, followed by subsequent tool strings and logging runs. After the final logging run is completed the cable and sheave wheels were rigged down.

Before departure, the logging engineer printed field logs for on site distribution and sent the data via satellite to the Schlumberger data archiving center. The Schlumberger data processing center was alerted that the data were ready for post-acquisition processing.

3.2 Log Quality Control and Assessment

Schlumberger has a thorough set of procedures and protocols for ensuring that the geophysical logging measurements are of very high quality. This includes full calibration of tools when they are first built, regular recalibrations and tool measurement/maintenance checks, and real-time monitoring of log quality as measurements are made. Indeed, one of the primary responsibilities of the logging engineer is to ensure, before and during acquisition, that the log measurements meet prescribed quality criteria.

A tool specific base calibration that directly relates the tool response to the physical measurement using the designed measurement principle is performed on all Schlumberger logging tools when first assembled in the engineering production centers. This is accomplished through a combination of computer modeling and controlled measurements in calibration models with known physical parameters.

The base calibration is augmented through regular "master calibrations" for most Schlumberger tools – typically performed every one to six months in local Schlumberger shops (such as Farmington, NM), depending on tool design. Master calibrations consist of controlled measurements using specially designed calibration tanks/jigs and internal calibration devices that are built into the tools. The measurements are used to fine-tune the tool's calibration parameters and to verify that the measurements are valid.

In addition, on every logging job, onsite before and after "calibrations" are executed for most Schlumberger tools directly before/after lowering/removing the tool string from the borehole. For most tools these represent a measurement verification instead of an actual calibration – used to confirm the validity of the measurements directly before acquisition and to ensure that they have not drifted or been corrupted during the logging job.

All Schlumberger logging measurements have a number of associated depth-dependent quality control (QC) logs and flags to assist with identifying and determining the magnitude of log quality problems. These QC logs are monitored in real-time by the logging engineer during acquisition and are used in the post-acquisition processing of the logs to determine the best processing approach for optimizing the overall validity of the property estimates derived from the logs.

Additional information on specific tool calibration procedures can be found on the Schlumberger web page (http://www.hub.slb.com/index.cfm?id=id11618).

3.3 Processing Procedure

After the geophysical logging job was completed in the field and the data archived, the data were downloaded to the Schlumberger processing center. There the data were processed, in the order below, to (1) correct the measurements for near-wellbore environmental conditions and redo the raw measurement field processing for certain tools using better processing algorithms, (2) depth match and splice the log curves from different logging runs, and (3) model the near-wellbore substrate lithology/mineralogy and pore fluids through integrated log analysis. Separately, the FMI electrical image was processed to produce scaled and normalized high-resolution images that were interpreted to identify geologic features and compute fracture apertures. Afterwards an integrated log montage was built to combine and compile all the processed log results.

Environmental Corrections and Raw Measurement Reprocessing

If required, the field log measurements were processed to correct for conditions in the well, including fluid type (water or air), presence of steel casing, and (to a much lesser extent) pressure, temperature, and water salinity. Basically these environmental corrections entail subtracting from the measurement response the known influences of the set of prescribed borehole conditions. In R-26 the log measurements requiring these corrections are the CNT porosity, TLD density, ECS elemental concentrations, and NGS spectral gamma ray logs.

Two CNT neutron porosity measurements are available – one that measures thermal ("slow") neutrons and one that measures epithermal ("fast") neutrons. Measurement of epithermal neutrons is required to make neutron porosity measurements in air-filled hole. In water/mud-filled hole both the CNT epithermal and thermal neutron measurements are valid, but the thermal neutron porosity has better statistical precision. Both epithermal and thermal neutron porosity measurements were made in R-26 since the borehole was partly water-filled (below 435 ft) and partly air-filled (above 435 ft) during the September logging (the log interval during the October logging was all below the well water level). The thermal neutron porosity measurement was reprocessed for borehole conditions, although the results were very similar to the field logs. For further processing and analysis (e.g. ELAN analysis), the reprocessed thermal neutron porosity log was used.

The standard open hole processing algorithm used for the TLD density measurement is influenced by the steel density in cased hole. A cased hole density algorithm was applied to the raw TLD field measurements obtained in cased hole sections of the combined September and October log intervals (comprising 30–68 ft and 981–1007 ft) to try to eliminate the casing response. While the algorithm can account for the casing per say, it cannot account for air- or water-filled gaps in the annulus between the casing and the formation—that cause erroneously low bulk density readings.

The raw ECS elemental yield measurements include the contribution of iron from steel casing and hydrogen from fluid in the borehole. The processing consists of subtracting these unwanted contributions from the raw normalized yields, then performing the normal elemental yields-to-weight fraction processing. The contribution to subtract is a constant baseline amount (or zoned constant values if there are bit/casing size changes), usually determined by comparing the normalized raw yields in zones directly below/above the borehole fluid/casing change. The ECS logs from R-26 have two short cased hole sections (30–68 ft and 981–1007 ft), for which casing corrections were applied. At the time of the September ECS logging in R-26 the borehole water level was 455 ft; no hydrogen correction was required in the air-filled section above 455 ft and the difference between the hydrogen yield above and below this depth was used to determine the baseline borehole hydrogen correction to apply below. For the October logging the entire ECS log interval was below the well water level; in this case the hydrogen baseline subtraction was determined by a trial and error comparison of the resulting estimated ECS water content with CNT and TLD porosities to check relative agreement.

The NGS spectral gamma ray logs are affected by the material (fluid, air, casing) in the borehole because different types and amounts of these materials have different gamma ray shielding properties; the NGS measures incoming gamma rays emitted by radioactive elements in the formation surrounding the borehole. The processing algorithms try to correct for the damping influence of the borehole material. The NGS logs from R-26 were reprocessed to fully account for the environmental effects of the borehole fluid (water and air), hole size, and casing (the latter above 68 ft).

The measurements cannot be fully corrected for borehole washouts or rugosity, as well as the annulus material (e.g., bentonite grout) between casing and the formation, since the specific characteristics of these features (e.g., geometry) are unknown and their effects on the measurements often too significant to account for. Thus, the compromising effects of these conditions on the measurements should be accounted for in the interpretation of the log results.

Depth-Matching and Splicing

Once the logs were environmentally corrected for the conditions in the borehole and the raw measurement reprocessing was completed, the logs from different tool runs were depth-matched to each other using the AIT-NGS tool run as the base reference. Gamma ray was used as the common correlation log measurement for depth-matching the different runs. The second logging suite (October 2003) was depth-matched to the first suite (September 2003) by shifting the AIT-NGS tool run logs from the second suite to the AIT-NGS run from the first suite (using gross gamma), then depth-matching the logs from the remaining second suite tool runs to the depth-shifted AIT-NGS run (using gross gamma). Once all the logs were on depth with each other, logs

from the October logging runs (spanning the bottom 500 ft of R-26) were spliced to the equivalent logs from the September logging runs (spanning the top 1000 ft of R-26).

Integrated Log Analysis

An integrated log analysis, using as many of the processed logs as possible, was performed to model the near-wellbore substrate lithology/mineralogy and pore fluids. This analysis was performed using the Elemental Log Analysis (ELAN*) program (Mayer and Sibbit, 1980; Quieren et al, 1986) – a petrophysical interpretation program designed for depth-by-depth quantitative formation evaluation from borehole geophysical logs. ELAN estimates the volumetric fractions of user-defined rock matrix and pore constituents at each depth based on the known log measurement responses to each individual constituent by itself1. ELAN requires an a priori specification of the volume components present within the formation—fluids, minerals, and rocks. For each component, the relevant response parameters for each measurement are also required. For example, if one assumes that quartz is a volume component within the formation and the bulk density tool is used, then the bulk density parameter for this mineral is well known to be 2.65 g/cc.

The logging tool measurements, volume components, and measurement response parameters used in the ELAN analysis for R-26 are provided in Table 3.1. The final results of the analysis – an optimized mineral-fluid volume model – are shown on the integrated log montage (see montage on CD, inside back cover), 3rd track from the right (inclusive of the depth track). To make best use of all the measurement data and to perform the analysis across as much of the well interval as possible (25–1484 ft.), as many as possible of the processed logs were included in the analysis, with less weighting applied to less robust logs. Not all the tool measurements shown in Table 3.1 are used for the entire interval analyzed, as not all the measurements are available, or of good quality, across certain sections of the borehole. To accommodate fewer tool measurements certain model constituents are removed from the analysis in some intervals. Most notably, within the cased interval (above 68 ft) many of the minerals had to be removed from the model due to the absence of many of the logs.

The ELAN analysis was performed with as few constraints or prior assumptions as possible. A considerable effort was made to choose a set of minerals or mineral types for the model that is representative of Los Alamos area geology and it's volcanic origins. No prior assumption is made about water saturation—where the boundary between saturated and unsaturated zones lies (e.g. the depth to the top of the regional aquifer or perched zones). Thus, the presence and amount of air in the pore space is unconstrained. Total porosity and water-filled porosity are also left unconstrained throughout the analysis interval. Thus, interpretations should be made from the ELAN results with the understanding that the mineral-fluid model represents a mathematically optimized solution that is not necessarily a physically accurate representation of the native geologic formation. Within this context, the ELAN model is a robust estimate of the bulk mineral-fluid composition that accounts for the combined response from all the geophysical measurements.

---

*Mark of Schlumberger

[1]Mathematically this corresponds to an inverse problem – solving for constituent volume fractions from an (over)determined system of equations relating the measured log results to combinations of the tool measurement response to individual constituents

Table 3.1
Tool measurements, volumes, and respective parameters used in the R-26 ELAN analysis .

Volume / Tool Measurement	Air	Capillary Bound Water	Water	Hornblende	Hypersthene	Labradorite	Silica Glass	Heavy Mafic Minerals	Augite	Montmorillinite	Pyrite	Orthoclase / Sanidine	Calcite	Quartz
Bulk density (g/cc)	–0.14	1.00	1.00	3.11	3.55	2.65	2.33	4.0	3.08	2.1	4.99	2.58 2.56		2.64
Epithermal neutron porosity (ft^3/ ft^3)	-0.02	1.00	1.00	0.05	0.01	-0.01	0.0	0.02	-0.01	0.6	0.17	-0.01	0.0	-0.047
Thermal neutron porosity (ft^3/ ft^3)	–0.05	1.00	1.00	0.06	0.04	-0.01	0.0	0.07	0.02	0.65	0.01	-0.01	0.0	-0.073
Volumetric photoelectric effect	0	0	0.40	12	20.2	7	4.2	65	23.8	4.4	82.1	7.3 7.0	14.1	4.8
Total CMR water-filled porosity (ft^3/ ft^3)	0	1.0	1.0	0	0	0	0	0	0	0.425	0	0	0	0
CMR bound fluid volume (ft^3/ ft^3)	0	1.0	0	0	0	0	0	0	0	0.425	0	0	0	0
Resistivity (ohm-m)	Very high	10	10	Very high	Very high	Very high	Very high	Very high	Very high	1.06	Very high	Very high	Very high	Very high
Dry weight silicon (lbf / lbf)	0.0	0.0	0.0	0.21	0.24	0.24	0.47	0.18	0.23	0.26	0	0.3 0.38	0	0.47
Dry weight calcium (lbf / lbf)	0.0	0.0	0.0	0.09	0.0	0.09	0.0	0.0	0.10	0.01	0.0	0.0	0.405	0.0
Dry weight iron (lbf / lbf)	0.0	0.0	0.0	0.08	0.20	0.02	0.0	0.22	0.11	0.04	0.47	0.02	0.0	0.0
Dry weight sulfur (lbf / lbf)	0.0	0.0	0.0	0.0	0.0	0.0	0.0	0.0	0.0	0.0	0.53	0.0	0.0	0.0
Dry weight titanium (lbf / lbf)	0.0	0.0	0.0	0.005	0.01	0.0	0.0	0.0	0.048	0.0	0.0	0.0	0.0	0.0
Dry weight aluminum (lbf / lbf)	0.0	0.0	0.0	0.07	0.0	0.16	0.0	0.0	0.02	0.11	0.0	0.10	0.0	0.0
Wet weight potassium (lbf / lbf)	0.0	0.0	0.0	0.01	0.0	0.0	0.0	0.0	0.003	0.005	0.0	0.102	0.0	0.0
Weight water (lbf / lbf)	0.0	1.0	1.0	0.0	0.0	0.0	0.0	0.0	0.0	0.18	0.0	0.0	0.0	0.0
Wet weight thorium (ppm)	0.0	0.0	0.0	50	25	3	2	4	20	24	0	5.5	0.0	2
Clay bound water volume (ft^3/ ft^3)	0	0	0	0	0	0	0	0	0	0.425	0	0		0

4.0 RESULTS

Preliminary results from the wireline geophysical logging measurements acquired by Schlumberger in R-26 were generated in the logging truck at the time the geophysical services were performed and are documented in field logs provided onsite. However, the measurements presented in the field results are not fully corrected for undesirable (from a measurement standpoint) borehole and geologic conditions and are provided as separate, individual logs. The field log results have been processed (1) to correct/improve the measurements, as best as possible, for borehole/formation environmental conditions and (2) to depth-match the logs from different tool runs in the well and splice the top (September 2003) and bottom (October 2003) logging suites. Additional logs were generated from integrated analysis of processed measured logs, providing valuable estimates of key geologic and hydrologic properties.

The processed log results are presented as continuous curves of the processed measurement versus depth and are displayed as (1) one page, compressed summary log displays for selected directly related sets of measurements (see Figures 4.1, 4.2, and 4.3) and (2) an integrated log montage that contains all the key processed log curves, on depth and side by side (see montage on CD, inside back cover). The summary log displays address specific characterization needs, such as moisture content, water saturation, and lithologic changes. The purpose of the integrated log montage is to present, side by side, all the most salient reprocessed logs and log-derived models, depth-matched to each other, so that correlations and relationships between the logs can be identified.

Important results from the processed geophysical logs in R-26 are described below.

Well Water Level

The standing water level in R-26 varied significantly during the September 2003 logging – dropping from 434 ft bgs at time of the first logging run to 444 ft at time of the second logging run, to 455 ft at time of the third logging run. The borehole water level was not measured during the October 2003 logging – the logging interval was completely below the water level.

Regional Aquifer

There is strong evidence from the processed logs that the bottom of R-26, below the Guaje Pumice Bed (bottom at 956 ft) in the Puye Formation, lies within the regional aquifer. The estimated pore volume water saturation (fraction of the total pore volume containing water) computed from the ELAN analysis is very high (mostly over 85%) from 954 ft to the bottom of the log interval (1484 ft). The estimate is even higher when computed directly from bulk density and ELAN water-filled porosity for a grain density range of 2.45 g/cc to 2.65 g/cc – ranging from 90% (2.65 g/cc) to a consistent 100% (2.45 g/cc). Water-filled and total porosity2 mostly ranges 20–30% across the interval, although there are a number of zones with elevated porosity:

- **968–980 ft**: Washed out zone characterized by unrealistically high total porosity (as high as 60% of total rock volume), although water-filled porosity is only 25–30%. This would

[2] Water-filled porosity is defined in this report as the fraction of the total rock volume occupied by water. Total porosity is defined as fraction of the total rock volume occupied by water plus air, plus any other fluid or gas (non-solid).

suggest the zone is unsaturated (estimated water saturation is less than 50%), but this condition could very well be an artifact of the huge washout.

- **997–1001 ft**: Characterized by very high total porosity (57% of total rock volume) and water-filled porosity (46%) – likely a result of a washout behind the casing across this interval at the time of logging.
- **1075–1108 ft**: Elevated porosity of 30–35%, increasing to 58% below 1100 ft. The hole condition and the log quality appear to be good across the interval (the hole does not contain any significant washouts). The zone is characterized by an increase in estimated clay content (5–20% of total volume), but high effective porosity (15–22%). A possible explanation for the very high porosity from 1100–1108 ft is that it is a pumice-rich zone within the Puye Formation.
- **1173–1175 ft**: Porosity of 50% associated with a sharp washout.
- **1186–1200 ft**: Elevated porosity of 30–43%, characterized by an increase in estimated clay content (10–30% of total volume), but high effective porosity (15–20%).
- **1422–1452 ft**: Elevated porosity of 30–35% possibly associated with a slight change in lithology (indicated by a drop in potassium content). There is a thin "tight" streak at 1490 ft.
- **1452–1483 ft (bottom of log interval)**: Continuation from above of elevated total porosity (30–35%), but water-filled porosity drops 20–22% below 1475 ft. This suggests that the zone from 1475 ft might not be fully saturated, but this may well be an artifact of the bottom of the borehole being the start of the logging passes – resulting in not having coverage from all the measurements (being below the first reading of some measurements).

Estimated water-filled effective porosity (moveable water) generally varies from 7% to 15% of total rock volume across this interval, except higher where noted above. The hydraulic conductivity estimated from the ELAN integrated log analysis (largely based on the CMR moveable water measurement) generally ranges 0.1–1 gal/dat/ft2, but reaches over 3 gal/day/ft2 in a few zones – most notably 1100–1108 ft and 1186–1200 ft.

Vadose Zone Perched Water

The processed logs indicate high water-filled porosity within the porous, volcaniclastic sediments and glassy tuff/pumice sections in R-26 from 575–955 ft bgs – ranging from 30% to 52% of the total rock volume. However, the processed logs, by themselves, indicate quite strongly that most of this interval is not fully saturated with water (that is not all of the pore space is occupied by water, instead partially filled with air). The total porosity in the sediments and glassy tuffs/pumice (estimated from the ELAN integrated log analysis) ranges from 40% to over 50% of total rock volume – resulting in water saturations of generally 50–80%. The computation of water saturation directly from bulk density and ELAN water-filled porosity for a grain density of 2.45 g/cc further confirms the conclusion that the glassy tuffs/pumice are not fully saturated. The highest estimated water saturation across this interval of water-rich sediments and glassy tuff/pumice (575–955 ft) occurs in the following zones:

- **580–620 ft**: Highly variably water saturation reaching 100%, but the zone contains abrupt, large washouts – likely causing the elevated water-filled and total porosity values as high as 70%.
- **620–640 ft**: Water saturation ranges 85–90%, due to a decrease in total porosity to 30–40%, with water-filled porosity averaging 30%.
- **642–662 ft**: Water saturation reaches over 90% as a result of increased water-filled porosity as high as 42%. due to a decrease in total porosity to 30–40%, with water-filled porosity averaging 30%.
- **780–827 ft**: Water saturation reaches 100% across this "Puye-like" bed within the Cerro Toledo interval – mostly due to a marked decrease in total porosity to 30%. The actual water-filled porosity is also lower than the surrounding high porosity glassy tuff. The borehole condition across this interval is highly rugose – making the estimation of water saturation from the geophysical logs in the water-filled borehole difficult and not very reliable.
- **950–955 ft**: Water-filled porosity increases significantly to 50% within the Guaje Pumice Bed, but the total porosity also jumps to 58%. It is possible water saturation reaches 100% at the very bottom of the bed, due to pooling of water.

The estimated moveable water content is generally quite high across this water-rich sediments and glassy tuff/pumice interval – ranging 5–25% of total rock volume. Although much of the 575–955 ft interval may not be fully saturated with the water, the high total and moveable water content suggests that, in general, the water is quite mobile. Likely water in this interval is connected (in a broad sense) to the saturated Puye Formation below.

Water-filled porosity drops off significantly above 575 ft (except in a washout at 475–485 ft) – averaging about 15–23% of total rock volume from 465–575 ft, 5–10% from 134–465 ft, and 10–20% from 25–134 ft. The total porosity drops significantly as well in the crystalline tuff interval 125–450 ft, ranging mostly 10–20% of total rock volume. Correspondingly, estimated water saturation reaches 100% in a number of places across this low porosity interval – most notably 370–440 ft – but the effective porosity is 5% or less. The apparent increase in water-filled porosity at the top of the well (above 134 ft) is coincident with a significant increase in total porosity (35–50%) – resulting in a low estimate of water saturation. The borehole is significantly washed out across this interval, as well, which may be partly responsible for the elevated porosity.

Geology

The processed geophysical log results clearly delineate the geologic material and formation contacts intersected by R-26. The generalized geologic stratigraphy observed from the logs across the logged interval is as follows (depth below ground surface):

- **33–68 ft: Clay-rich zone in cased hole** – characterized by clay content of 30% of total volume, but the elevated clay derived from the log measurements could well be due to bentonite used to seal the casing

- **68–134 ft: Porous volcanic tuff** – characterized by high total porosity (40% of total rock volume), high sanidine content and moderate silica mineral/glass content
- **134–465 ft: Low porosity volcanic tuff** – characterized by low total porosity (10–20% of total rock volume), high sanidine and silica mineral/glass content
- **465–505 ft: Porous volcanic tuff and Upper Cerro Toledo interval** – characterized by high total porosity (40–50% of total rock volume), high sanidine and silica mineral/glass content
- **505–524 ft: Heterogeneous bed within Cerro Toledo interval** – characterized by relatively low total porosity (20–25% of total rock volume), high potassium feldspar, plagioclase and silica mineral/glass content
- **524–530 ft: Porous zone** – characterized by high total porosity (30–50% of total rock volume), high sanidine and silica mineral/glass content
- **530–544 ft: Heterogeneous bed within Cerro Toledo interval** – characterized by relatively low total porosity (20–25% of total rock volume), high potassium feldspar, plagioclase and silica mineral/glass content
- **544–779 ft: Porous zone in Cerro Toledo interval** – characterized by high total porosity (40–50% of total rock volume), high sanidine and silica mineral/glass content
- **779–865 ft: Heterogeneous bed within Cerro Toledo interval** – characterized by highly variable porosity (20–40% of total rock volume), high potassium feldspar and silica mineral/glass content, and lesser plagioclase content
- **865–930 ft: Porous volcanic tuff** – characterized by high total porosity (40–50% of total rock volume), high sanidine and silica mineral/glass content
- **930–955 ft: Very porous volcanic pumice bed** – characterized by very high total porosity (58% of total rock volume), high sanidine and silica glass content
- **955–968 ft: Heterogeneous fanglomerate** – characterized by moderate total porosity (20–30% of total rock volume), high potassium feldspar, plagioclase and silica mineral/glass content
- **968–980 ft: Washout in heterogeneous fanglomerate** – characterized by unrealistically high total porosity (50–60% of total rock volume), high potassium feldspar, plagioclase and silica mineral/glass content
- **980–1010 ft: Heterogeneous fanglomerate** – characterized by relatively high total porosity (25–35% of total rock volume), high potassium feldspar and silica mineral/glass content, and the presence of clay (although the latter could be an artifact of the log measurement being made through casing in this interval)
- **1023–1026 ft: Thin clay-rich bed** – characterized by relatively high total porosity (35% of total rock volume), an indication of clay (clearly visible on the high resolution FMI image), high potassium feldspar, plagioclase and silica mineral/glass content

- **1026–1050 ft: Heterogeneous fanglomerate** – characterized by relatively low total porosity (20–25% of total rock volume), high potassium feldspar, plagioclase and silica mineral/glass content
- **1051–1053 ft: Thin clay-rich bed** – characterized by relatively high total porosity (35% of total rock volume), moderate clay, potassium feldspar, plagioclase and silica mineral/glass content
- **1053–1080 ft: Heterogeneous fanglomerate** – characterized by relatively low total porosity (20–25% of total rock volume), high potassium feldspar, plagioclase and silica mineral/glass content
- **1080–1114 ft: Clay-rich zone** – characterized by high total porosity (30–55% of total rock volume), moderate clay, potassium feldspar, plagioclase and silica mineral/glass content
- **1114–1135 ft: Heterogeneous fanglomerate** – characterized by relatively low total porosity (20–25% of total rock volume), high potassium feldspar, plagioclase and silica mineral/glass content
- **1135–1143 ft: Clay-rich zone** – characterized by relatively high total porosity (30–35% of total rock volume), moderate clay, potassium feldspar, plagioclase and silica mineral/glass content
- **1143–1171 ft: Heterogeneous fanglomerate** – characterized by relatively low total porosity (20–25% of total rock volume), high potassium feldspar, plagioclase and silica mineral/glass content
- **1171–1177 ft: Clay-rich zone** – characterized by high total porosity (50% of total rock volume), moderate clay, potassium feldspar, plagioclase and silica mineral/glass content
- **1177–1187 ft: Heterogeneous fanglomerate** – characterized by relatively low total porosity (20–25% of total rock volume), high potassium feldspar, plagioclase and silica mineral/glass content
- **1187–1200 ft: Clay-rich zone** – characterized by high total porosity (30–45% of total rock volume), moderate clay, potassium feldspar, plagioclase and silica mineral/glass content
- **1200–1233 ft: Heterogeneous fanglomerate** – characterized by relatively low total porosity (20–25% of total rock volume), high potassium feldspar, plagioclase and silica mineral/glass content
- **1233–1236 ft: Thin clay-rich bed** – characterized by moderate total porosity (30% of total rock volume), moderate clay, potassium feldspar, plagioclase and silica mineral/glass content
- **1236–1417 ft: Heterogeneous fanglomerate** – characterized by relatively low total porosity (20–25% of total rock volume), high potassium feldspar, plagioclase and silica mineral/glass content

- **1417–1423 ft: Clay-rich zone** – characterized by moderate total porosity (30% of total rock volume), moderate clay, potassium feldspar, plagioclase and silica mineral/glass content
- **1423–1483 ft (bottom of log interval): Heterogeneous, high porosity fanglomerate** – characterized by relatively high total porosity (30–38% of total rock volume), high plagioclase and silica mineral/glass content

4.1 Summary Logs

Three summary log displays have been generated for R-26 to highlight the key hydrogeologic and geologic information provided by the processed geophysical log results:

- Porosity summary log showing continuous hydrogeologic property logs, including total and moveable water content and water saturation – to highlight hydrologic information obtained from the integrated log results (Figure 4.1)
- Density and clay content summary showing a continuous logs of formation bulk density and estimated grain density, as well as photoelectric factor (sensitive to mineralogy) and estimated clay volume – to highlight key geologic rock matrix information obtained from the log results (Figure 4.2)
- Spectral natural gamma ray and lithology summary showing a high vertical resolution, continuous volumetric analysis of formation mineral and pore fluid composition (based on an integrated analysis of the logs) and key lithologic/stratigraphic correlation logs from the spectral gamma ray measurement (concentrations of gamma-emitting elements) – to highlight the geologic lithology, stratigraphy and correlation information obtained from the log results (Figure 4.3)

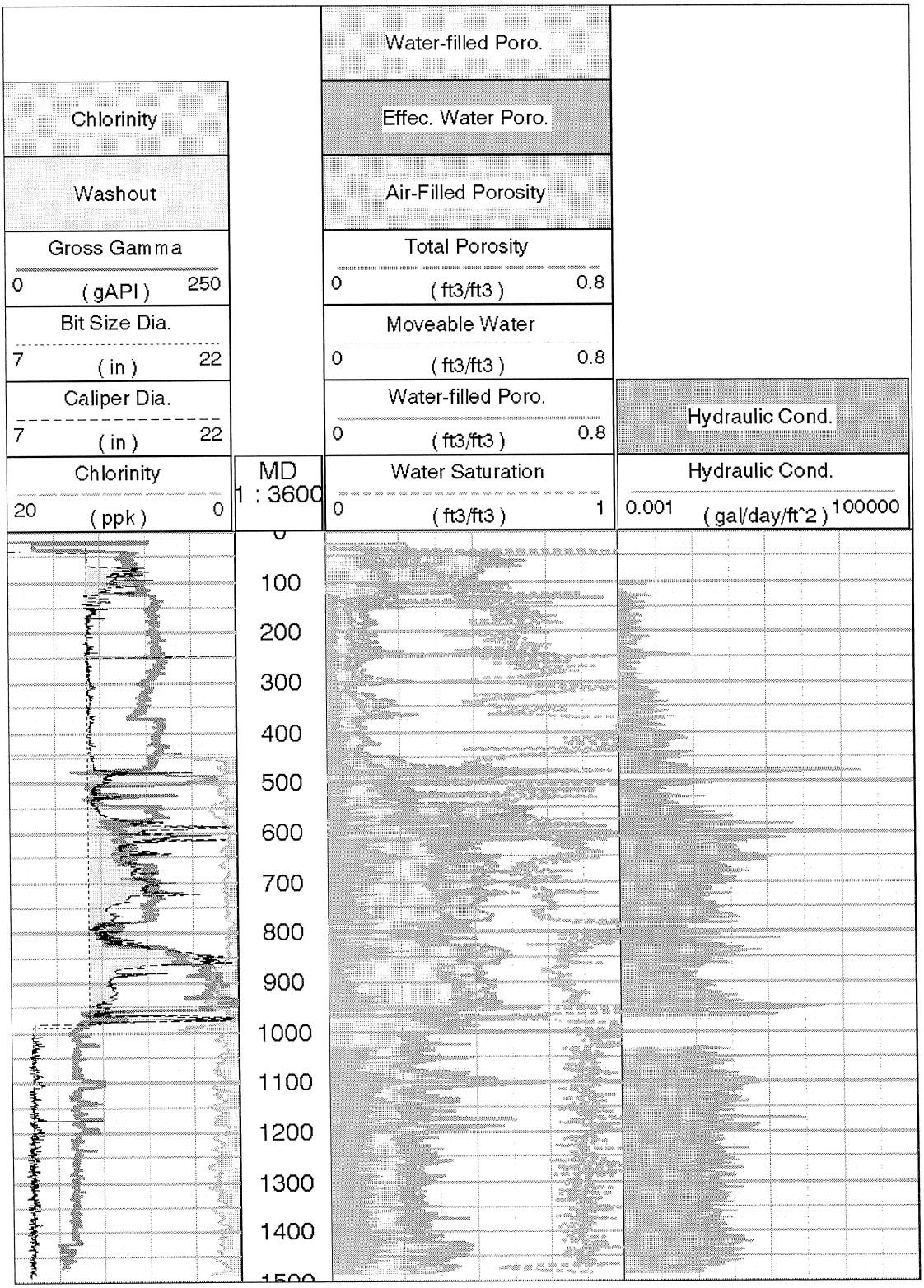
Chlorinity
Washout
Gross Gamma
0 (gAPI) 250
Bit Size Dia.
7 (in) 22
Caliper Dia.
7 (in) 22
Chlorinity
20 (ppk) 0
MD
1 : 3600
Water-filled Poro.
Effec. Water Poro.
Air-Filled Porosity
Total Porosity
0 (ft3/ft3) 0.8
Moveable Water
0 (ft3/ft3) 0.8
Water-filled Poro.
0 (ft3/ft3) 0.8
Water Saturation
0 (ft3/ft3) 1
Hydraulic Cond.
Hydraulic Cond.
0.001 (gal/day/ft^2) 100000
100
200
300
400
500
600
700
800
900
1000
1100
1200
1300
1400

Figure 4.1. Summary porosity logs in R-26 borehole from processed geophysical logs, interval 25–1484 ft, with caliper, gross gamma, apparent chlorinity, water saturation, and water hydraulic conductivity logs. Porosity, water saturation, and hydraulic conductivity logs are derived from the ELAN integrated log analysis.

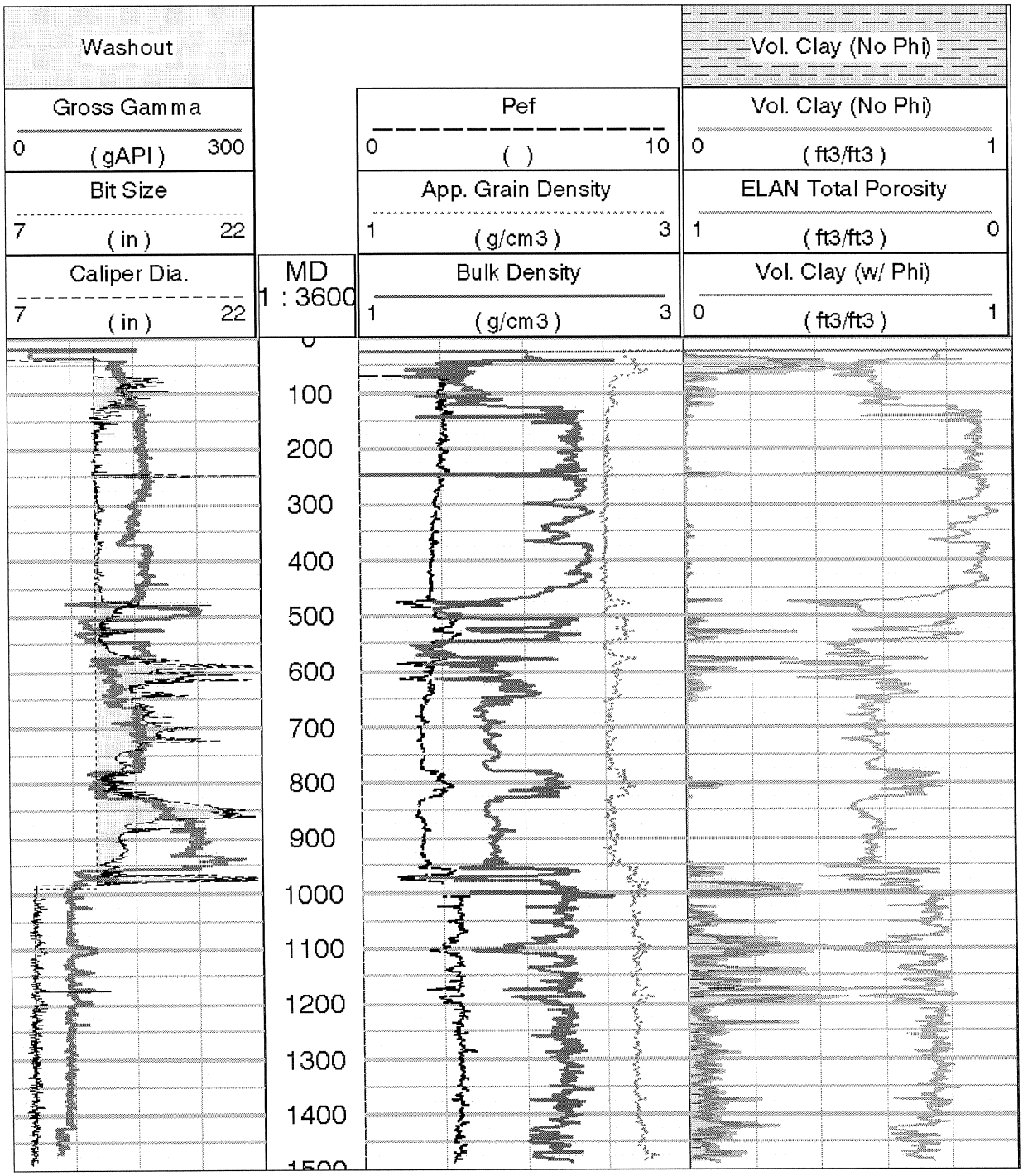

Figure 4.2. Summary bulk density and volume clay logs in R-26 borehole from processed geophysical logs, interval 25–1486 ft. Also shown – caliper, gross gamma, apparent grain density, and total porosity logs (the latter two derived from the ELAN analysis).

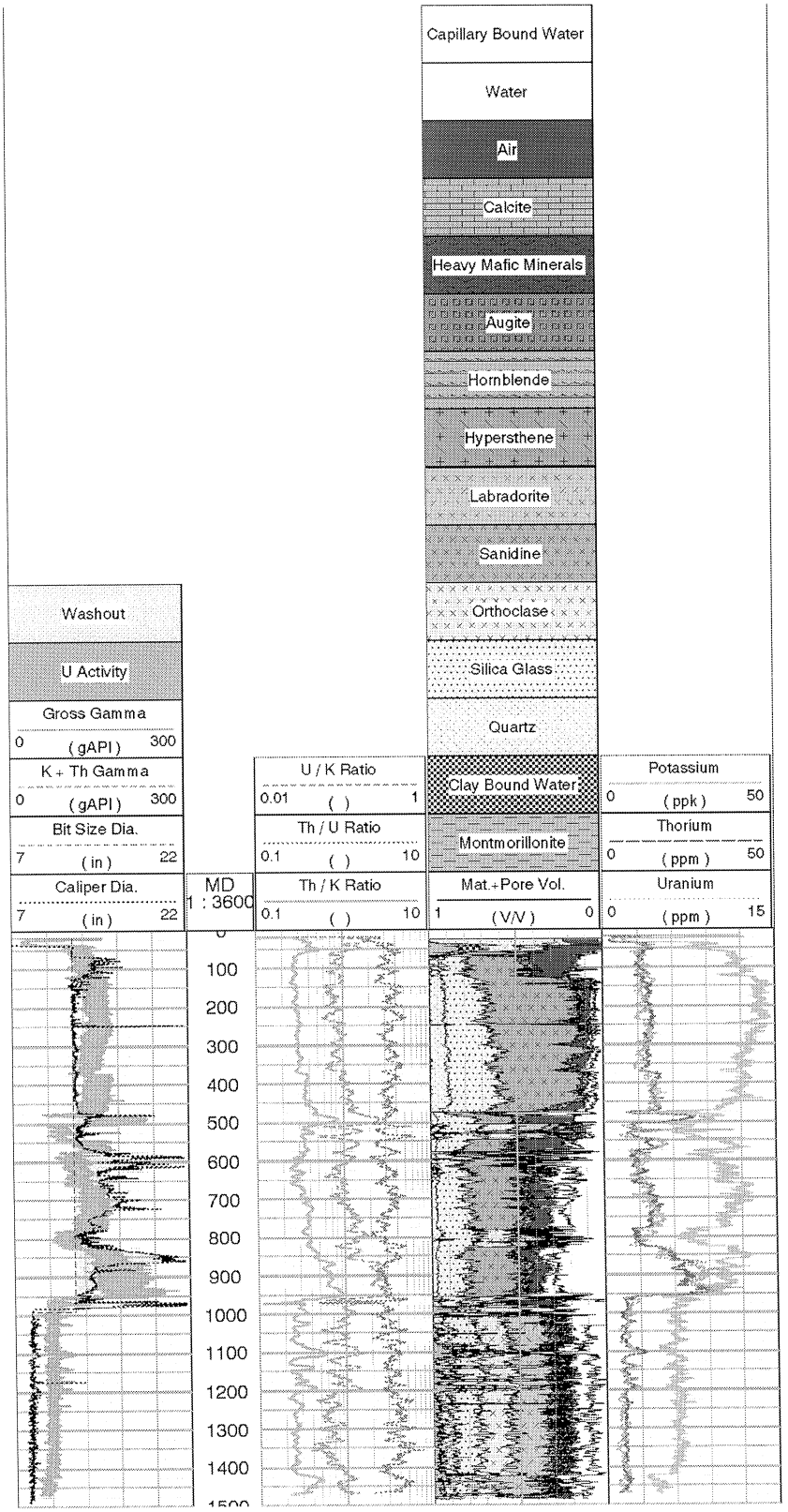

Figure 4.3. Summary spectral natural gamma ray logs and ELAN mineralogy/lithology and pore fluid model from R-26 borehole, interval 25–1484 ft. Caliper log is also shown.

4.2 Integrated Log Montage

This section summarizes the integrated geophysical log montage for R-26. The montage is provided in Appendix D. A description of each log curve in the montage follows—organized under the heading of each track, starting from track 1 on the left-hand side of the montage. Note that the descriptions in this section focus on what the curves are and how they are displayed; the specific characteristics and interpretations of the R-26 geophysical logs are provided in the previous section.

Track 1–Depth

The first track on the left contains the depth below ground surface in units of feet, as measured by the geophysical logging system during the AIT logging run of September 2003 and the AIT logging run of October 2003 (the latter run depth-matched to former). All the geophysical logs are depth-matched to the spectral gross gamma measurement run with the AIT.

Track 2–Basic Logs

The second track on the left (inclusive of the depth track) presents basic curves:

- gamma ray (thick black), recorded in API units and displayed on a scale of 0 to 250 API units;
- two calipers from the FMI (thin dotted and dashed pink) and one from the TLD (thin solid pink) with bit size as a reference (dashed-dotted black) to show washout (pink shading), recorded as hole diameter in inches and displayed on a scale of 11 to 21 in.;
- spontaneous potential or SP (dashed red – valid only below the borehole water level), recorded in millivolts and displayed on a relative scale;
- bulk chlorinity (dashed green with green shading), recorded in parts per thousand (ppk) and displayed on a scale of 5 to 0 ppk (left to right);
- borehole deviation displayed as a tadpole every ten feet (light blue dots and connected line segments) – the "head" marks the angular deviation from vertical at that particular depth, on a scale of zero to 5 degrees, and the "tail" shows the azimuth of the deviation, true north represented by the tail facing straight towards the top of the page.

Two gamma ray curves from the NGS are presented:

- total gross gamma (thick solid black curve) and
- gross gamma minus the contribution of uranium (dashed black).

Track 3–Resistivity

The third track displays the resistivity measurements from the AIT, spanning most of the open hole section. All the resistivity logs are recorded in units of ohmmeters and displayed on a logarithmic scale of 2 to 2000 ohm-m.

Six electrical resistivity logs from the AIT are displayed:

- Borehole fluid resistivity (solid orange curve)–only valid in water-filled hole
- Bulk electrical resistivity at five median depths of investigation–10 in. (black solid), 20 in. (long-dashed blue), 30 in. (short-dashed red), 60 in. (dashed-dotted green), and 90 in. (solid purple)–each having a two-foot vertical resolution.

The area between the 10 in. and 90 in. resistivity curves, representing radial variations in bulk resistivity (potentially from invasion of drilling fluids), is shaded:

- blue when the 10 in. resistivity is greater than the 90 in. resistivity (labeled "resistive invasive") and
- yellow when the 90 in. resistivity is greater than the 10 in. resistivity (labeled "conductive invasive").

A high vertical resolution (~8 in.), shallow-reading (~2 in.) micro-resistivity log from the MCFL is also displayed in this track (solid pink curve).

Track 4–Porosity

The fourth track displays the primary porosity log results. All the porosity logs are recorded in units of volumetric fraction and displayed on a linear scale of 0.75 (left side) to negative 0.1 (right side). Specifically, these logs consist of

- CNT air-filled epithermal neutron porosity (solid sky blue curve)–epithermal neutron porosity processed for air-filled hole and, thus, valid (and visible) only in the air-filled borehole (above 833 ft);
- CNT water-filled thermal neutron porosity (solid sky blue curve)–thermal neutron porosity valid only in the water-filled borehole;
- CMR total water-filled porosity (solid black);
- CMR effective water-filled porosity (dashed green);
- CMR bound water porosity (light blue area shading)–representing by the area between the CMR total and effective water-filled porosities;
- Total porosity derived from bulk density and neutron porosity using 2.65 g/cc (dotted red curve), 2.45 g/cc (long-dashed red curve), and 2.25 g/cc (dashed red curve)–with red shading between the 2.25 and 2.65 g/cc saturation curves to show the range; and
- ELAN total water and air-filled porosity (dashed-dotted cyan)–derived from the ELAN integrated analysis of all log curves to estimate optimized matrix and pore volume constituents.

Track 5–Density

The fifth track displays the:

- bulk density (thick solid maroon curve) on a scale of 1 to 3 grams per cubic centimeter (g/cc);
- Pe (long-dashed black curve) on a scale of 0 to 10 non-dimensional units;

- density correction (dashed orange curve) on a scale of -0.75 to 0.25 g/cc; and
- apparent grain density (dashed-dotted brown curve), derived from the ELAN analysis, on a scale of 2 to 4 g/cc.

Grey area shading is shown where the Pe increases above 3 (indicating the presence of heavy, possibly mafic, minerals) and orange shading is shown where the density correction is greater than the absolute value of 0.25 (indicating the density processing algorithm had to perform a major correction to the bulk density calculation).

Track 6–NGS Spectral Gamma

The sixth track from the left displays the spectral components of the NGS measurement results as wet weight concentrations:

- potassium (solid green curve) in units of parts per thousand (ppk) and on a scale of -50 to 50 ppk;
- thorium (dashed brown) in units of parts per million (ppm) and on a scale of 50 to -50 ppm; and
- uranium (dotted blue) in units of parts per million (ppm) and on a scale of 20 to 0 ppm.

Track 7–CMR Porosity

Track 7 displays various CMR water-filled porosities along with measurement quality flags–valid only in the open hole section. The porosity and measurement quality logs are presented on a scale of 0.5 to zero volume fraction and discrete blocks originating from the left side, respectively. Specifically, the CMR logs shown in this track are:

- Total water-filled porosity (solid black curve)–representing the total water volume fraction measured by the CMR;
- Three millisecond (ms) porosity (short-dashed brown)–representing the water volume fraction corresponding to the portion of the CMR measured T2 distribution that is above 3 ms, a cutoff that is considered to be representative of the break between clay-bound water (less than 3 ms) and all other types of water (greater than 3 ms);
- Effective water-filled, or free fluid, porosity (solid pink)–representing the water volume fraction that is moveable (can flow), based on a 33 ms T2 distribution cutoff that is considered representative of the break between bound water (less than 33 ms) and moveable water (greater than 33 ms) in clastic rocks;
- Clay-bound water (brown area shading between total and 3 ms porosity logs)–representing the water volume fraction that is bound within clays;
- Capillary-bound water (pink area shading between 3 ms and effective porosity logs)–representing the water volume fraction that is bound within matrix pores by capillary forces;

- CMR wait-time flag (red area shading)–activates when there is significant measurement response at late T2 times, corresponding to large amounts of completely free ("bathtub") water and often associated with washouts or very large pores;
- CMR measurement noise flag (yellow and orange area shading)–activates when there is potentially detrimental amounts of measurement noise detected by the tool, at moderate (yellow) and high (orange) levels.

Track 8 –Pore Size Distribution

Track 8 displays the water-filled pore size distribution as determined by the CMR–shown as binned water-filled porosities and valid only in the open hole section. The binned porosity logs are presented on a scale of 0.5 to zero volume fraction with colored area shading corresponding to the different bins:

- Clay-bound water–brown area shading;
- Micro pore and small pore water (the sum comprising capillary-bound water)–gray and blue area shading, respectively;
- Medium pore, large pore, and late decay (the sum comprising effective water-filled porosity)–yellow, red, and green area shading, respectively.

Track 9–CMR T2 Distribution (Waveforms)

The CMR T2 distribution is displayed in Track 9 as green waveform traces at discrete depths. The horizontal axis, corresponding to relaxation time in milliseconds, is on a logarithmic scale from 0.3 to 3000 ms. Also plotted are the:

- T2 logarithmic mean (solid blue curve) and
- T2 cutoff time used for differentiating between bound and free water (solid red line)–a constant 33 ms in this case.

Track 10–CMR T2 Distribution (Heated Amplitude)

Track 10 displays the T2 distribution in another way–on a heated color scale where progressively "hotter" color (green to yellow to red) corresponds to increasing T2 amplitude. The remaining aspects of the display are the same as in Track 9, except that the T2 logarithmic mean is shown as a solid white curve and the T2 cutoff is not displayed.

Track 11–CMR Hydraulic Conductivity

Track 11 displays several estimates of hydraulic conductivity (K) derived from the CMR measurement and the ELAN integrated log analysis (the latter primarily sensitive to the CMR measurement of moveable water), presented on a logarithmic scale of 10^{-4} to 10^{6} gallons per day per feet squared (gal/day/ft^2):

- A K versus depth estimate derived from using the SDR permeability equation applied to the processed CMR results, converted to hydraulic conductivity (dashed purple curve);

- A K versus depth estimate derived from using the Timur-Coates permeability equation with total and moveable water content derived from the ELAN analysis, converted to hydraulic conductivity (solid blue curve); and
- An intrinsic K versus depth estimate (assuming full saturation) using the Timur-Coates permeability equation with total and effective porosity values derived from the ELAN analysis, converted to hydraulic conductivity (dotted cyan).

Track 12– FMI Image (Dynamic Normalization)

Track 12 displays the FMI image, processed with dynamic normalization so that small-scale electrical resistivity features are amplified in the image. (With dynamic normalization the range of electrical resistivity amplitudes – colors in the image – is normalized across a small moving depth window.) The image is fully oriented and corresponds to the inside of the borehole wall unwrapped, such that the left-hand side represents true north, half-way across the image is south, and the right-hand side is north again. The four color tracks in the image correspond to portions of the borehole wall contacted by the four FMI caliper pads; the blank space in between is the portion of the borehole wall not covered by the pads.

Also displayed are the interpreted bed boundaries (thin blue sinusoids) and electrically conductive fractures (bold purple sinusoids).

Track 13– FMI Bedding and Fractures

Track 13 displays the interpreted bed boundaries and fractures picked from the FMI image, shown in two ways:

- Individually as tadpoles at the depths the bedding plane or fracture crosses the midpoint of the borehole – where the "heads" (circles/triangles) represent the dip angle and the "tails" (line segments) represent the true dip azimuth (direction the bed is dipping towards). Bed boundaries are shown as circular headed blue and black tadpoles and electrically conductive fractures are shown as red circular headed and black triangular headed tadpoles.
- Summed as dip azimuth rose histograms (green colored fan plots for bed boundaries) – where the number of bed boundaries having a dip direction within a particular sector are summed, thus highlighting the predominant dip directions.

Track 14– FMI Image (Static Normalization)

Track 14 displays the FMI image again, but in a different way – processed with static normalization to highlight larger scale features and trends. (With static normalization the range of electrical resistivity amplitudes – colors in the image – is normalized across the entire length of the log interval.)

Track 15– Fracture Aperture and High Resolution Porosity

Track 15 displays the estimated hydraulic aperture of any interpreted electrically conductive fractures (red circles on logarithmic scale of 0.0001 to 1 inch) – computed using an FMI image scaled to the AIT shallow resistivity. Also displayed is the high resolution thermal neutron

porosity log (solid blue) and the high resolution density porosity (solid red), the latter computed assuming a matrix grain density of 2.65 g/cc and pore fluid density of 1.0 g/cc. Both these logs have an 8 in depth resolution. Where the density porosity is greater than the neutron porosity the area between the two logs is shaded red. The red shading is an indication of air in the pore space (less than 100% water saturation).

Tracks 16 to 20– Geochemical Elemental Measurements

The narrow tracks 16 to 20 present the geochemical measurements iron (Fe) and silicon (Si), sulfur (S) and calcium (Ca), potassium (K) and estimated aluminum (Al), titanium (Ti) and gadolinium (Gd), and hydrogen (H) and bulk chlorinity (Cl) —from left to right respectively, in units of dry matrix weight fraction (except H wet weight fraction, Cl and K in ppk).

Track 21–ELAN Mineralogy Model Results (Dry Weight Fraction)

Track 21 displays the results from the ELAN integrated log analysis (the matrix portion)–presented as dry weight fraction of mineral types chosen in the model:

- Montmorillonite clay (brown/tan)
- Quartz (yellow with small black dots)
- Silica glass (orange)
- Orthoclase or other potassium feldspar (lavender)
- Sanidine (violet)
- Labradorite or other plagioclase feldspar (pink)
- Hypersthene (purple)
- Hornblende (forest green)
- Augite (maroon)
- Heavy mafic/ultramafic minerals, such as magnetite or olivine (dark green)
- Pyrite (cross-hatched red).

Track 22–ELAN Mineralogy-Pore Space Model Results (Wet Volume Fraction)

Track 22 displays the results from the ELAN integrated log analysis–presented as wet mineral and pore fluid volume fractions:

- Montmorillonite clay (brown/tan)
- Clay-bound water (checkered gray-black)
- Quartz (yellow with small black dots)
- Silica glass (yellow with large black dots)
- Orthoclase or other potassium feldspar (lavender)
- Sanidine (violet)

- Labradorite or other plagioclase feldspar (pink)
- Pyrite (tan with large black squares).
- Hypersthene (purple)
- Hornblende (forest green)
- Augite (maroon)
- Heavy mafic minerals, such as magnetite (dark army green)
- Air (red)
- Moveable water (white)
- Capillary-bound water (light blue).

Track 23–Summary Logs

Track 23, the second track from the right, displays several summary logs that describe the fluid and air-filled volume measured by the geophysical tools, including water saturation:

- Optimized estimate of total volume fraction water from the ELAN analysis (solid dark blue curve and area shading);
- Optimized estimate of moveable volume fraction water (effective porosity in fully saturated conditions) from the ELAN analysis (dashed cyan curve and green area shading);
- Optimized estimate of total volume fraction of air-filled porosity from the ELAN analysis (solid red curve and dotted red area shading);
- Optimized estimate of water saturation (percentage of pore space filled with water) from the ELAN analysis (dashed-dotted purple curve);
- Water saturation as calculated directly from the bulk density and geochemical estimated porosity using a grain density of 2.65 g/cc (dotted light blue curve), 2.45 g/cc (long-dashed light blue curve), and 2.25 g/cc (dashed light blue curve)–with light blue shading between the 2.25 and 2.65 g/cc saturation curves to show the range;
- Integrated estimated relative water flow from the CMR log that mimics a flow meter (spinner) acquired under flowing conditions (solid green line coming from left-hand side at bottom of logged interval);
- Potential for water flow indicator from the CMR log (block cyan coming from the right-hand side of the track).

The porosity curves scale from 0 to 1 total volume fraction, left to right; the water saturation scales from 0 to 1 volume fraction of pore space, from left to right. The relative water flow is on a scale of 0 to 1 relative volumetric flow rate from left to right. The flow indicator is a binary-valued flag that rises to halfway through the first division from the right on the x-axis when the CMR measurement indicates a potential for flow.

Track 24–Depth

The final track on the right, same as the first track on the left, displays the depth below ground surface in units of feet, as measured by the geophysical logging system during the AIT-NGT logging run.

5.0 REFERENCES

Kenyon, B., R. Kleinberg, C. Straley, G. Gubelin, and C. Morris: 1995. "Nuclear Magnetic Resonance Imaging— Technology for the 21st Century." Oilfield Review, v. 7, n. 3, p. 19–33.

Mayer, C. and A. Sibbit, 1980. "GLOBAL, A New Approach to Computer-Processed Log Interpretation." Paper SPE 9341 presented at the 1980 SPE Annual Technical Conference and Exhibition.

Quirein, J., S. Kimminau, J. LaVigne, J. Singer, and F. Wendel. 1986. "A Coherent Framework for Developing and Applying Multiple Formation Evaluation Models." Paper DD in 27th Annual Logging Symposium Transactions: Society of Professional Well Log Analysts.

Schlumberger, Log Interpretation Charts 1998 (SMP-7006).

Schlumberger, Log Interpretation Principles/Applications 1989 (SMP 7017)

Schlumberger, Log Quality Control Manual. 1997

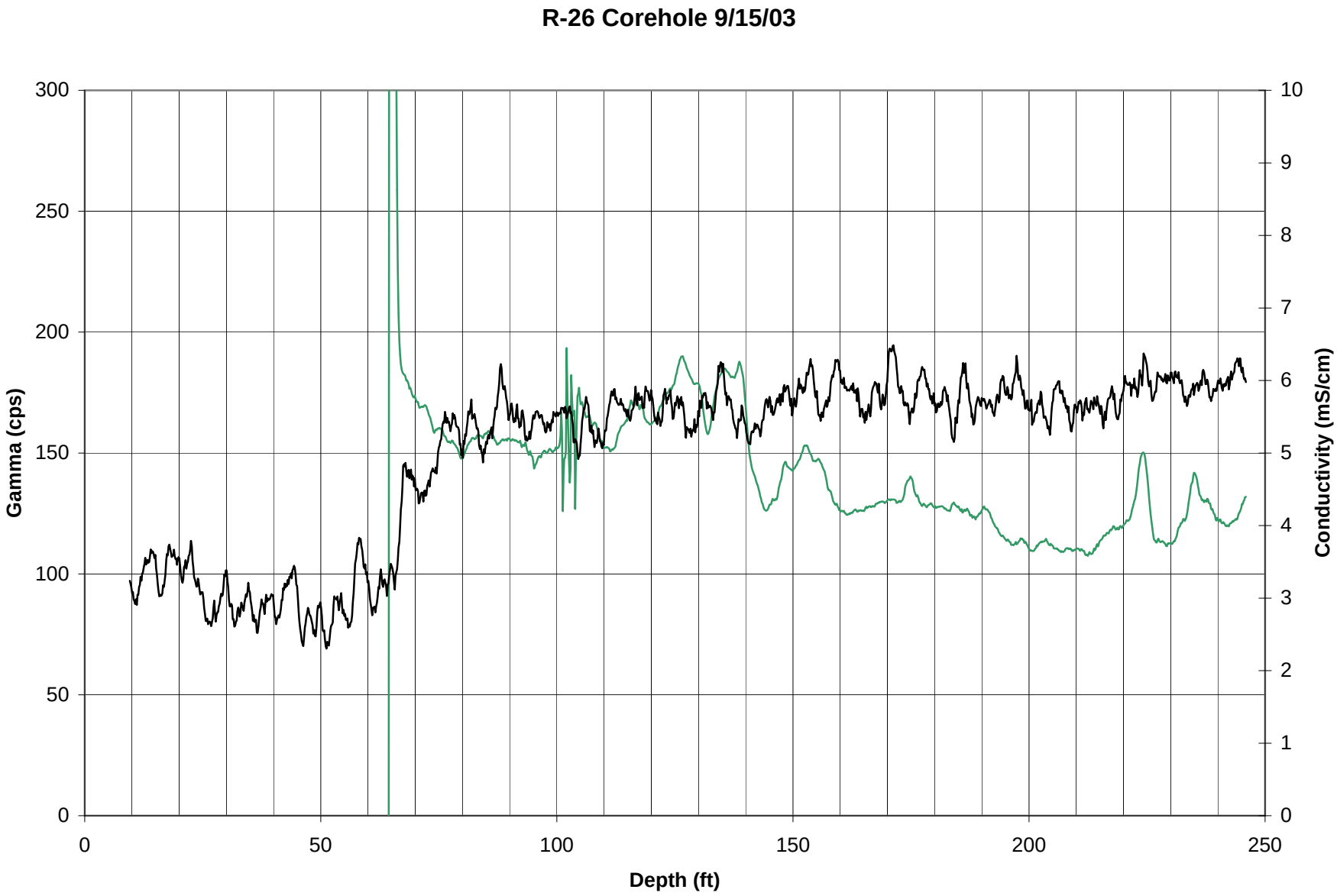
R-26 Corehole 9/15/03
Gamma (cps)
Conductivity (mS/cm)
Depth (ft)
300
250
200
150
100
50
0
10
9
8
7
6
5
4
3
2
1
0
0
50
100
150
200
250

R-26 Caliper After Reaming 10-17-03

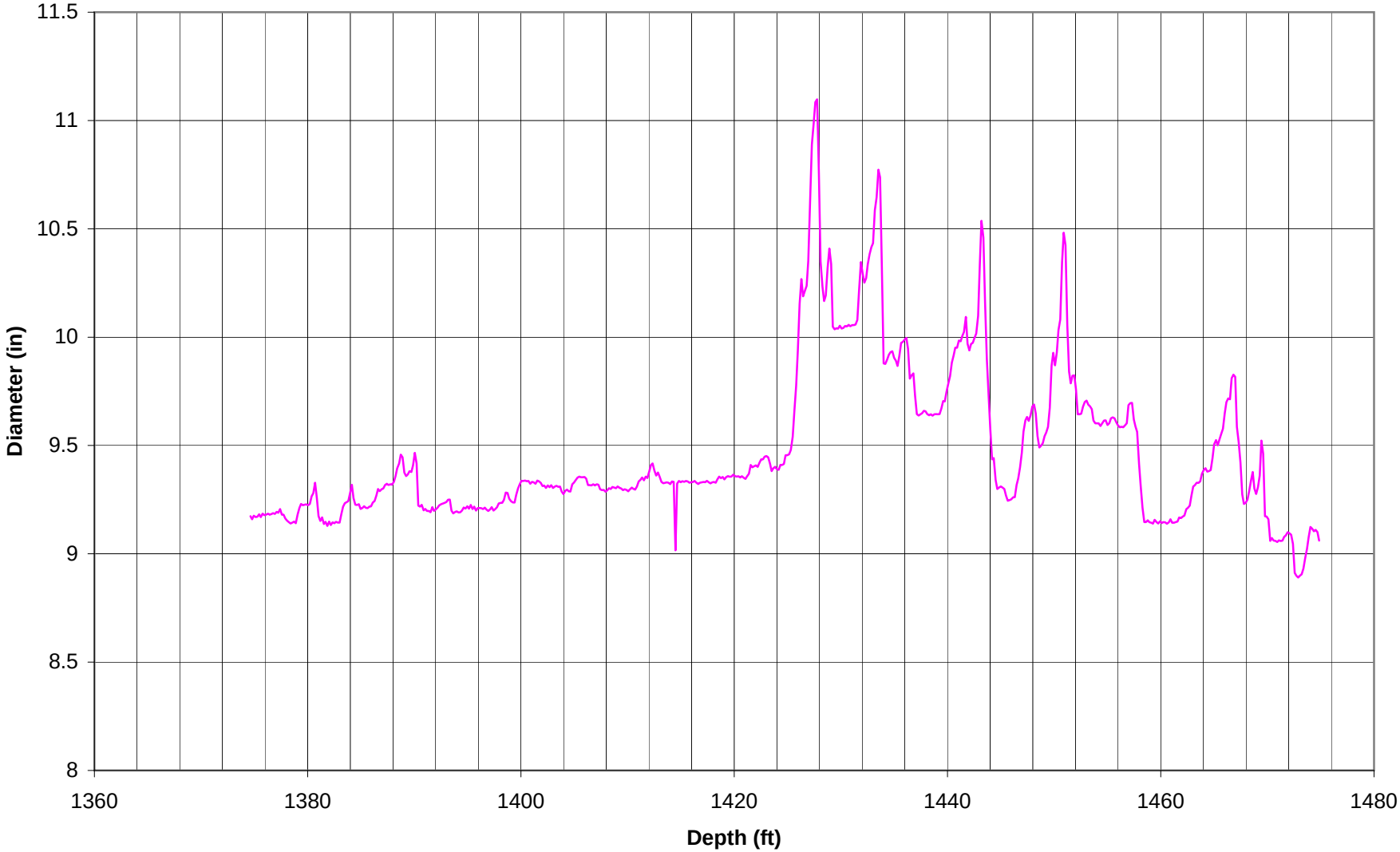

```
~VERSION INFORMATION
VERS                 :CWLS LOG ASCII STANDARD-VERSION 2.0
WRAP                 :ONE LINE PER DEPTH STEP
~WELL INFORMATION
STRT       1474.85  :START DEPTH
STOP       1374.63  :STOP DEPTH
STEP      -0.16404  :STEP
NULL       -999.25  :NULL VALUE
COMP    Kleinfelder :COMPANY
WELL                 :WELL
FLD                  :FIELD
LOC                  :LOCATION
PROV     N/A         :PROVINCE
SRVC     N/A         :SERVICE COMPANY
DATE      ######## :DATE
UWI      N/A         :UNIQUE WELL ID
~CURVE INFORMATION
DEPT                 :DEPTH
GAMM                 :Gamma
CALI                 :Caliper
~PARAMETER INFORMATION
ELEV                 :ELEVATION
STE                  :STE
DENS                 :DENSITY
CASI                 :CASING TO1
OPER                 :OPERATING RIG TIME
WGT1                 :WGT1
CASI                 :CASING SIZE1
CASI                 :CASING TO2
WGT2                 :WGT2
CASI                 :CASING SIZE2
WELL     R-26        :WELL ID
CASI                 :CASING TO3
K.B.                 :K.B.
WGT3                 :WGT3
TYPE                 :TYPE LOG
CASI                 :CASING SIZE3
CASI                 :CASING TO4
SALI                 :SALINITY
TITL                 :TITLE
WGT4                 :WGT4
TOP                  :TOP LOGGED INTERVAL
CASI                 :CASING SIZE4
WITN                 :WITNESSED BY
CASI                 :CASING TO5
DRIL                 :DRILLING MEAS. FROM
WGT5                 :WGT5
CASI                 :CASING SIZE5
CTY                  :CTY
WGT6                 :WGT6
CASI                 :CASING SIZE6
MAX.                 :MAX. REC. TEMP.
D.F.                 :D.F.
CASI                 :CASING TO6
OTHE                 :OTHER SERVICES
BIT1                 :BIT1
DEPT                 :DEPTH-DRILLER
BIT2                 :BIT2
RUN                  :RUN No
RUN1                 :RUN1
BIT3                 :BIT3
RUN2                 :RUN2
PERM                 :PERMANENT DATUM
TWP                  :TWP
BIT4                 :BIT4
LOG                  :LOG MEAS. FROM
BIT                  :BIT FROM1
RUN3                 :RUN3
BIT5                 :BIT5
CASI                 :CASING FROM1
TYPE                 :TYPE FLUID IN HOLE
RUN4                 :RUN4
FLD                  :FLD
BIT6                 :BIT6
BIT                  :BIT TO1
CASI                 :CASING FROM2
BIT                  :BIT FROM2
CO                   :CO
RGE                  :RGE
BIT                  :BIT TO2
DEPT                 :DEPTH-LOGGER
CASI                 :CASING FROM3
BIT                  :BIT FROM3
RUN5                 :RUN5
SEC                  :SEC
BIT                  :BIT TO3
G.L.                 :G.L.
CASI                 :CASING FROM4
BIT                  :BIT FROM4
RUN6                 :RUN6
BIT                  :BIT TO4
BTM                  :BTM LOGGED INTERVAL
CASI                 :CASING FROM5
BIT                  :BIT FROM5
STAT                 :STATE
BIT                  :BIT TO5
LEVE                 :LEVEL
CASI                 :CASING FROM6
BIT                  :BIT FROM6
COUN                 :COUNTRY
RECO     Mark Ever   :RECORDED BY
FILI                 :FILING No
BIT                  :BIT TO6
~OTHER
~A
  1474.85   9.06115
  1474.69   9.09963
  1474.53   9.11072
  1474.36   9.10419
   1474.2   9.11593
  1474.03   9.12376
  1473.87    9.0768
  1473.71   9.02268
  1473.54   8.98094
  1473.38   8.93203
  1473.21   8.90529
  1473.05   8.89942
  1472.89   8.89029
  1472.72   8.89877
  1472.56   8.91181
  1472.39   9.04615
  1472.23   9.08789
  1472.07   9.09441
   1471.9   9.09963
  1471.74   9.08593
  1471.57   9.07811
  1471.41   9.06115
  1471.25    9.0592
  1471.08    9.0618
  1470.92   9.05463
  1470.75   9.05985
  1470.59   9.06115
  1470.42   9.07289
  1470.26   9.05985
   1470.1   9.15963
  1469.93   9.17202
  1469.77   9.17332
   1469.6   9.46157
  1469.44   9.52288
  1469.28   9.36114
  1469.11   9.30767
  1468.95   9.27636
  1468.78    9.3018
  1468.62   9.37745
  1468.46   9.33636
  1468.29   9.28875
  1468.13   9.25028
  1467.96   9.23528
   1467.8   9.23006
  1467.64   9.27441
  1467.47   9.42179
  1467.31   9.51635
  1467.14   9.58613
  1466.98     9.817
  1466.82   9.82678
  1466.65   9.81048
  1466.49    9.7133
  1466.32   9.71722
  1466.16   9.70026
     1466   9.64874
  1465.83   9.57766
  1465.67   9.55288
   1465.5   9.52679
  1465.34    9.5007
  1465.18   9.52483
  1465.01   9.50527
  1464.85    9.4407
  1464.68   9.38658
  1464.52   9.38201
  1464.36    9.3794
  1464.19   9.39505
  1464.03   9.38788
  1463.86   9.36897
   1463.7    9.3344
  1463.54   9.32723
  1463.37   9.32788
  1463.21   9.31745
  1463.04   9.31027
  1462.88   9.26788
  1462.72   9.22223
  1462.55   9.21245
  1462.39   9.20593
  1462.22   9.17658
  1462.06   9.17202
  1461.89   9.16484
  1461.73   9.16745
  1461.57   9.14854
   1461.4   9.14658
  1461.24   9.14332
  1461.07   9.14332
  1460.91   9.15963
  1460.75   9.14528
  1460.58   9.13876
  1460.42   9.14528
  1460.25   9.14658
  1460.09   9.14202
  1459.93   9.14984
  1459.76   9.14006
   1459.6   9.14658
  1459.43   9.15702
  1459.27   9.13941
  1459.11   9.14332
  1458.94   9.14593
  1458.78   9.15441
  1458.61   9.14658
  1458.45   9.14658
  1458.29    9.2131
  1458.12   9.31223
  1457.96   9.41462
  1457.79   9.56266
  1457.63   9.58744
  1457.47   9.62005
   1457.3   9.69635
  1457.14    9.6957
  1456.97   9.68591
  1456.81   9.60309
  1456.65   9.59266
  1456.48   9.58418
  1456.32   9.58613
  1456.15   9.58418
  1455.99   9.59266
  1455.83     9.607
  1455.66   9.62526
   1455.5   9.62983
  1455.33   9.62526
  1455.17   9.60309
  1455.01   9.59461
  1454.84   9.61613
  1454.68   9.61548
  1454.51   9.60309
  1454.35   9.59005
  1454.18   9.60244
  1454.02   9.60244
  1453.86   9.60244
  1453.69   9.61548
  1453.53   9.66765
  1453.36    9.6807
   1453.2   9.68918
  1453.04   9.70744
  1452.87   9.70091
  1452.71   9.67874
  1452.54   9.64679
  1452.38   9.64418
  1452.22   9.64418
  1452.05   9.75961
  1451.89   9.82352
  1451.72   9.82221
  1451.56     9.787
   1451.4   9.84113
  1451.23    10.057
  1451.07   10.4248
   1450.9   10.4822
  1450.74   10.3439
  1450.58   10.0818
  1450.41   10.0329
  1450.25   9.92982
  1450.08   9.86982
  1449.92   9.92786
  1449.76   9.86786
  1449.59   9.67418
  1449.43   9.58548
  1449.26   9.56005
   1449.1   9.54244
  1448.94   9.51049
  1448.77   9.49875
  1448.61   9.49092
  1448.44   9.54309
  1448.28   9.64809
  1448.12   9.68918
  1447.95   9.67939
  1447.79   9.63831
  1447.62   9.61353
  1447.46   9.63179
   1447.3   9.61613
  1447.13   9.56396
  1446.97   9.46679
   1446.8   9.39897
  1446.64    9.3481
  1446.48   9.31745
  1446.31   9.26136
  1446.15   9.26071
  1445.98   9.25158
  1445.82   9.24767
  1445.65   9.24506
  1445.49   9.26919
  1445.33   9.29919
  1445.16   9.30571
     1445   9.31093
  1444.83   9.30571
  1444.67   9.29919
  1444.51   9.34027
  1444.34   9.44201
  1444.18   9.43614
  1444.01   9.57766
  1443.85     9.742
  1443.69   9.90047
  1443.52   10.1639
  1443.36     10.46
  1443.19    10.537
  1443.03   10.3348
  1442.87   10.0987
   1442.7   10.0166
  1442.54   9.99764
  1442.37   9.97351
  1442.21   9.96895
  1442.05    9.9396
  1441.88    9.9696
  1441.72   10.0935
  1441.55   10.0237
  1441.39   10.0055
  1441.23   9.98069
  1441.06    9.9846
   1440.9   9.95134
  1440.73   9.95134
  1440.57   9.91547
  1440.41   9.88221
  1440.24   9.81961
  1440.08   9.78765
  1439.91   9.74656
  1439.75   9.70352
  1439.59   9.70483
  1439.42   9.67091
  1439.26   9.64483
  1439.09   9.64418
  1438.93   9.64483
  1438.77   9.64418
   1438.6   9.63766
  1438.44   9.64418
  1438.27   9.63961
  1438.11   9.64483
  1437.94   9.65787
  1437.78   9.65983
  1437.62   9.64874
  1437.45   9.64352
  1437.29   9.63831
  1437.12   9.64483
  1436.96   9.73026
   1436.8   9.83265
  1436.63   9.82417
  1436.47   9.80852
   1436.3   9.94612
  1436.14   9.99699
  1435.98   9.98851
  1435.81   9.97808
  1435.65   9.97351
  1435.48   9.91352
  1435.32   9.86721
  1435.16   9.89134
  1434.99   9.90504
  1434.83   9.93504
  1434.66   9.93047
   1434.5   9.91873
  1434.34   9.89591
  1434.17   9.87634
  1434.01   9.87895
  1433.84   10.3231
  1433.68   10.7378
  1433.52   10.7731
  1433.35   10.6452
  1433.19   10.5852
  1433.02   10.4339
  1432.86   10.4157
   1432.7   10.3831
  1432.53   10.3374
  1432.37   10.2722
   1432.2   10.2513
  1432.04   10.2957
  1431.88   10.3465
  1431.71     10.22
  1431.55   10.0792
  1431.38   10.0583
  1431.22   10.0557
  1431.06   10.0557
  1430.89   10.0505
  1430.73    10.057
  1430.56   10.0492
   1430.4   10.0518
  1430.24   10.0426
  1430.07     10.04
  1429.91   10.0531
  1429.74   10.0394
  1429.58   10.0413
  1429.41   10.0361
  1429.25   10.0479
  1429.09   10.3374
  1428.92   10.4092
  1428.76   10.3179
  1428.59   10.1926
  1428.43   10.1666
  1428.27   10.2331
   1428.1   10.3492
  1427.94   10.7548
  1427.77   11.0978
  1427.61   11.0848
  1427.45   10.9857
  1427.28   10.8891
  1427.12   10.6439
  1426.95   10.3531
  1426.79    10.237
  1426.63   10.2148
  1426.46   10.1887
   1426.3   10.2683
  1426.13   10.1535
  1425.97   9.93699
  1425.81   9.77591
  1425.64   9.65918
  1425.48   9.54048
  1425.31   9.47918
  1425.15   9.45962
  1424.99    9.4557
  1424.82   9.45505
  1424.66   9.41462
  1424.49   9.41005
  1424.33   9.41071
  1424.17   9.38788
     1424   9.39049
  1423.84   9.40158
  1423.67    9.3944
  1423.51   9.38201
  1423.35   9.41658
  1423.18   9.44527
  1423.02   9.45114
  1422.85   9.44853
  1422.69   9.43614
  1422.53   9.43614
  1422.36   9.41918
   1422.2   9.40092
  1422.03    9.4081
  1421.87   9.40418
   1421.7   9.39962
  1421.54   9.41005
  1421.38   9.36962
  1421.21   9.35788
  1421.05   9.34549
  1420.88   9.35136
  1420.72   9.35788
  1420.56   9.35201
  1420.39   9.35788
  1420.23   9.35658
  1420.06   9.35853
   1419.9   9.36506
  1419.74   9.35658
  1419.57   9.35593
  1419.41   9.35853
  1419.24   9.35397
  1419.08   9.34353
  1418.92   9.35462
  1418.75    9.3494
  1418.59   9.35658
  1418.42   9.34353
  1418.26   9.32788
   1418.1    9.3318
  1417.93   9.32984
  1417.77   9.32527
   1417.6   9.33049
  1417.44   9.33701
  1417.28   9.33049
  1417.11    9.3318
  1416.95   9.32984
  1416.78   9.32788
  1416.62   9.32201
  1416.46   9.32788
  1416.29   9.33636
  1416.13    9.3318
  1415.96   9.33049
   1415.8   9.32788
  1415.64   9.33375
  1415.47   9.33636
  1415.31   9.33245
  1415.14   9.33506
  1414.98   9.33049
  1414.82   9.33636
  1414.65   9.32397
  1414.49   9.01615
  1414.32   9.33245
  1414.16   9.33375
     1414   9.32136
  1413.83   9.32788
  1413.67   9.32984
   1413.5   9.32723
  1413.34   9.32593
  1413.17   9.33245
  1413.01   9.35593
  1412.85   9.37549
  1412.68   9.36114
  1412.52   9.38397
  1412.35   9.41723
  1412.19   9.41005
  1412.03   9.38136
  1411.86   9.35006
   1411.7   9.35658
  1411.53   9.33897
  1411.37   9.35201
  1411.21   9.34158
  1411.04   9.33375
  1410.88   9.31027
  1410.71   9.29593
  1410.55   9.29984
  1410.39   9.30571
  1410.22   9.29723
  1410.06   9.28875
  1409.89   9.29527
  1409.73   9.29788
  1409.57   9.29397
   1409.4    9.3018
  1409.24   9.30441
  1409.07   9.31093
  1408.91   9.30245
  1408.75   9.30571
  1408.58   9.30832
  1408.42   9.29919
  1408.25   9.30245
  1408.09   9.29332
  1407.93    9.2868
```

R26 Caliper 10/16/03

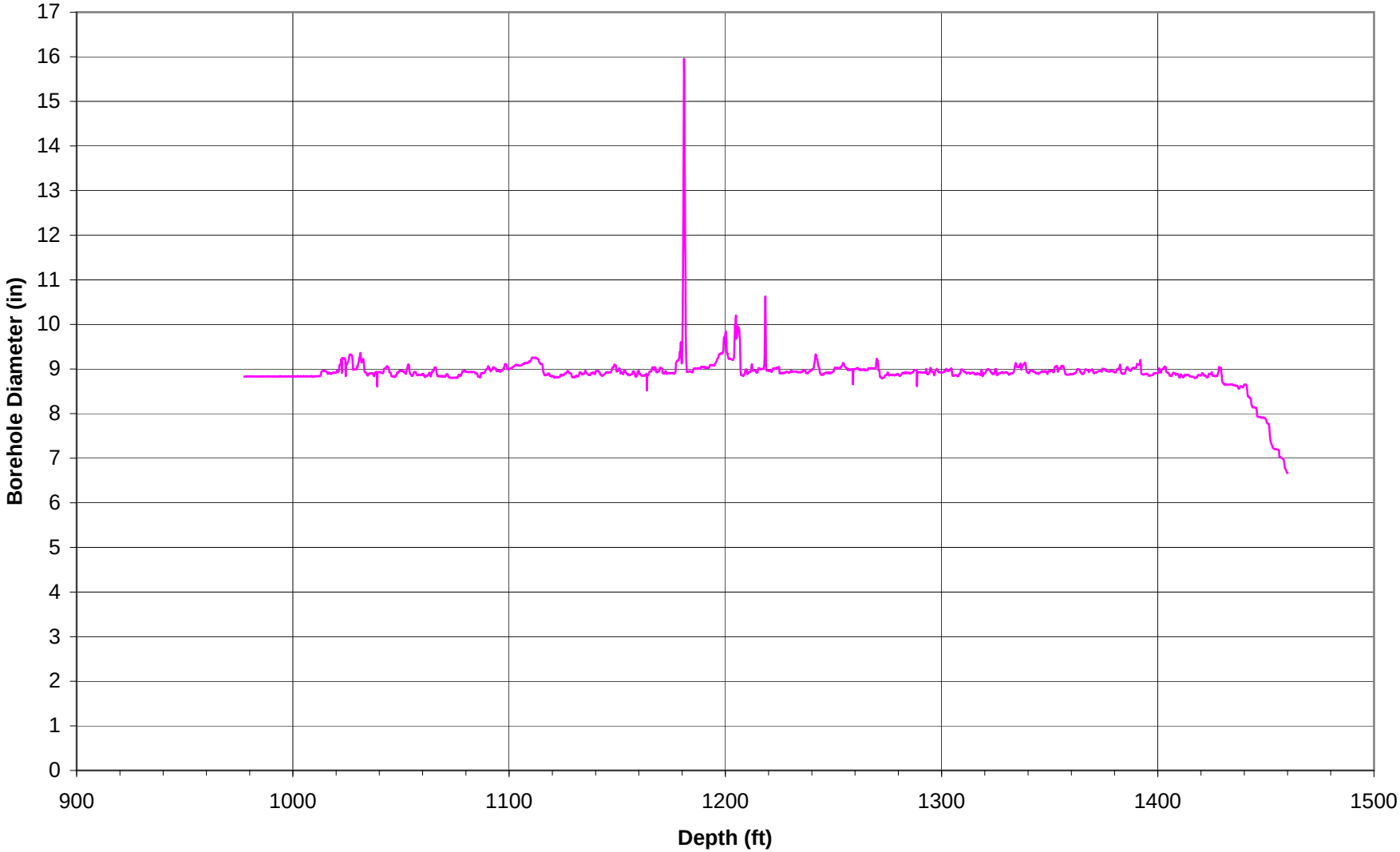

```
~VERSION INFORMATION
VERS                    :CWLS LOG ASCII STANDARD-VERSION 2.0
WRAP                    :ONE LINE PER DEPTH STEP
~WELL INFORMATION
STRT            1459.99 :START DEPTH
STOP            977.524 :STOP DEPTH
STEP           -0.16349 :STEP
NULL            -999.25 :NULL VALUE
COMP                    :COMPANY
WELL                    :WELL
FLD                     :FIELD
LOC                     :LOCATION
PROV     N/A            :PROVINCE
SRVC     N/A            :SERVICE COMPANY
DATE           ######## :DATE
UWI      N/A            :UNIQUE WELL ID
~CURVE INFORMATION
DEPT                    :DEPTH
GAMM                    :Gamma
CALI                    :Caliper
~PARAMETER INFORMATION
ELEV                    :ELEVATION
STE                     :STE
DENS                    :DENSITY
CASI                    :CASING TO1
OPER
WGT1                    :WGT1
CASI                    :CASING SIZE1
CASI                    :CASING TO2
WGT2                    :WGT2
CASI                    :CASING SIZE2
WELL     R-26           :WELL ID
CASI                    :CASING TO3
K.B.                    :K.B.
WGT3                    :WGT3
TYPE                    :TYPE LOG
CASI                    :CASING SIZE3
CASI                    :CASING TO4
SALI                    :SALINITY
TITL                    :TITLE
WGT4                    :WGT4
TOP                     :TOP LOGGED INTERVAL
CASI                    :CASING SIZE4
WITN                    :WITNESSED BY
CASI                    :CASING TO5
DRIL                    :DRILLING MEAS. FROM
WGT5                    :WGT5
CASI                    :CASING SIZE5
CTY                     :CTY
WGT6                    :WGT6
CASI                    :CASING SIZE6
MAX.                    :MAX. REC. TEMP.
D.F.                    :D.F.
CASI                    :CASING TO6
OTHE                    :OTHER SERVICES
BIT1                    :BIT1
DEPT                    :DEPTH-DRILLER
BIT2                    :BIT2
RUN                     :RUN No
RUN1                    :RUN1
BIT3                    :BIT3
RUN2                    :RUN2
PERM                    :PERMANENT DATUM
TWP                     :TWP
BIT4                    :BIT4
LOG                     :LOG MEAS. FROM
BIT                     :BIT FROM1
RUN3                    :RUN3
BIT5                    :BIT5
CASI                    :CASING FROM1
TYPE                    :TYPE FLUID IN HOLE
RUN4                    :RUN4
FLD                     :FLD
BIT6                    :BIT6
BIT                     :BIT TO1
CASI                    :CASING FROM2
BIT                     :BIT FROM2
CO                      :CO
RGE                     :RGE
BIT                     :BIT TO2
DEPT                    :DEPTH-LOGGER
CASI                    :CASING FROM3
BIT                     :BIT FROM3
RUN5                    :RUN5
SEC                     :SEC
BIT                     :BIT TO3
G.L.                    :G.L.
CASI                    :CASING FROM4
BIT                     :BIT FROM4
RUN6                    :RUN6
BIT                     :BIT TO4
BTM                     :BTM LOGGED INTERVAL
CASI                    :CASING FROM5
BIT                     :BIT FROM5
STAT                    :STATE
BIT                     :BIT TO5
LEVE                    :LEVEL
CASI                    :CASING FROM6
BIT                     :BIT FROM6
COUN                    :COUNTRY
RECO     Mark Ever      :RECORDED BY
FILI                    :FILING No
BIT                     :BIT TO6
~OTHER
~A
  1459.99  6.66906
  1459.83  6.66906
  1459.67  6.68077
   1459.5  6.70877
  1459.34   6.7335
  1459.18  6.75108
  1459.01  6.75694
  1458.85  6.77711
  1458.69  6.79404
  1458.52  6.89363
  1458.36  6.92162
  1458.19  6.96719
  1458.03  6.98867
  1457.87  6.99062
   1457.7  6.99128
  1457.54  6.99453
  1457.38  6.99909
  1457.21  7.01276
  1457.05  7.01666
  1456.89  7.01471
  1456.72  7.01666
  1456.56  7.03424
   1456.4  7.02968
  1456.23  7.02708
  1456.07  7.17745
  1455.91   7.1833
  1455.74  7.19372
  1455.58  7.18981
  1455.42  7.19177
  1455.25  7.19893
  1455.09  7.19763
  1454.92  7.20023
  1454.76  7.19632
   1454.6  7.20023
  1454.43  7.19893
  1454.27  7.20088
  1454.11  7.21129
  1453.94  7.20674
  1453.78  7.21129
  1453.62   7.2152
  1453.45  7.22236
  1453.29  7.22822
  1453.13  7.25035
  1452.96  7.27639
   1452.8  7.29396
  1452.64  7.29852
  1452.47  7.34279
  1452.31  7.35125
  1452.15  7.36947
  1451.98  7.44303
  1451.82  7.51854
  1451.65  7.64873
  1451.49  7.72229
  1451.33  7.75483
  1451.16  7.77566
     1451  7.78087
  1450.84  7.78022
  1450.67  7.78087
  1450.51  7.79129
  1450.35  7.83165
  1450.18  7.85573
  1450.02  7.86029
  1449.86  7.88112
  1449.69  7.89674
  1449.53  7.90325
  1449.37  7.90716
   1449.2  7.90976
  1449.04   7.9039
  1448.88  7.91497
  1448.71  7.91887
  1448.55  7.91171
  1448.39  7.90976
  1448.22  7.90325
  1448.06  7.91366
  1447.89  7.91236
  1447.73  7.91432
  1447.57  7.90781
   1447.4  7.92278
  1447.24  7.92017
  1447.08  7.92538
  1446.91  7.92473
  1446.75  7.92733
  1446.59  7.92864
  1446.42  7.92538
  1446.26  7.92929
   1446.1  7.93189
  1445.93  7.94816
  1445.77  8.04581
  1445.61  8.12262
  1445.44  8.12262
  1445.28  8.13629
  1445.12  8.13889
  1444.95  8.13889
  1444.79   8.1441
  1444.62  8.14735
  1444.46   8.1415
   1444.3  8.13954
  1444.13  8.13433
  1443.97  8.13889
  1443.81  8.16102
  1443.64  8.15582
  1443.48  8.18446
  1443.32  8.20203
  1443.15  8.28796
  1442.99  8.33417
  1442.83  8.33157
  1442.66  8.35696
   1442.5  8.36217
  1442.34  8.35956
  1442.17  8.38169
  1442.01  8.37258
  1441.85  8.39016
  1441.68   8.3843
  1441.52  8.42075
  1441.35   8.5236
  1441.19  8.60432
  1441.03  8.63491
  1440.86  8.64793
   1440.7  8.64598
  1440.54  8.65184
  1440.37  8.65379
  1440.21  8.64923
  1440.05  8.65184
  1439.88  8.64077
  1439.72  8.62189
  1439.56   8.5952
  1439.39  8.58739
  1439.23  8.58674
  1439.07  8.60627
   1438.9  8.61018
  1438.74  8.61669
  1438.58  8.61538
  1438.41  8.61343
  1438.25  8.61734
  1438.08  8.60236
  1437.92  8.57763
  1437.76  8.56266
  1437.59  8.56331
  1437.43   8.5594
  1437.27  8.56331
   1437.1  8.58544
  1436.94  8.61538
  1436.78  8.62515
  1436.61  8.62775
  1436.45  8.62319
  1436.29   8.6284
  1436.12  8.62124
  1435.96  8.61864
   1435.8  8.63491
  1435.63  8.62775
  1435.47  8.63426
  1435.31  8.63621
  1435.14  8.63231
  1434.98  8.63491
  1434.82  8.63882
  1434.65  8.65119
  1434.49    8.659
  1434.32  8.65574
  1434.16  8.64988
     1434  8.65379
  1433.83    8.659
  1433.67   8.6603
  1433.51  8.65119
  1433.34  8.65379
  1433.18  8.64923
  1433.02  8.64533
  1432.85  8.64793
  1432.69  8.65249
  1432.53  8.65119
  1432.36  8.64923
   1432.2  8.64923
  1432.04  8.65379
  1431.87  8.64533
  1431.71  8.64923
  1431.55  8.64337
  1431.38  8.65444
  1431.22  8.64923
  1431.05  8.64468
  1430.89  8.64337
  1430.73  8.67267
  1430.56  8.67397
   1430.4  8.67136
  1430.24  8.67983
  1430.07   8.6974
  1429.91  8.69936
  1429.75  8.72084
  1429.58  8.86014
  1429.42  8.90115
  1429.26  8.99619
  1429.09  9.03459
  1428.93  8.98512
  1428.77  9.02157
   1428.6   9.0079
  1428.44  9.03459
  1428.28  9.04761
  1428.11  8.95192
  1427.95  8.90766
  1427.78  8.89334
  1427.62  8.86014
  1427.46  8.84386
  1427.29  8.83801
  1427.13  8.84191
  1426.97  8.85037
   1426.8  8.83931
  1426.64  8.83996
  1426.48  8.84191
  1426.31  8.83736
  1426.15  8.84452
  1425.99  8.85493
  1425.82  8.85233
  1425.66  8.84582
   1425.5  8.85037
  1425.33  8.84842
  1425.17   8.8699
  1425.01  8.93044
  1424.84  8.92653
  1424.68  8.89138
  1424.51  8.88553
  1424.35  8.88553
  1424.19  8.88683
  1424.02  8.88162
  1423.86  8.89203
   1423.7  8.89659
  1423.53  8.88943
  1423.37  8.84647
  1423.21  8.81392
  1423.04  8.81653
  1422.88  8.81653
  1422.72  8.81392
  1422.55  8.81197
  1422.39  8.82694
  1422.23  8.84712
  1422.06  8.85233
   1421.9  8.85493
  1421.74  8.85103
  1421.57  8.86404
  1421.41  8.85688
  1421.25  8.85493
  1421.08  8.88032
  1420.92  8.90245
  1420.75  8.90636
  1420.59  8.91091
  1420.43  8.90505
  1420.26  8.86404
   1420.1  8.86014
  1419.94  8.85363
  1419.77  8.85103
  1419.61  8.86014
  1419.45  8.86339
  1419.28  8.85688
  1419.12  8.86404
  1418.96    8.866
  1418.79  8.86014
  1418.63  8.86795
  1418.47  8.85298
   1418.3   8.8354
  1418.14  8.82043
  1417.98  8.80546
  1417.81  8.80741
  1417.65  8.80936
  1417.48  8.81392
  1417.32  8.80546
  1417.16  8.79309
  1416.99  8.79179
  1416.83  8.80481
  1416.67  8.81587
   1416.5  8.82434
  1416.34  8.83085
  1416.18   8.8315
  1416.01  8.83085
  1415.85  8.82499
  1415.69  8.82499
  1415.52  8.82759
  1415.36  8.82889
   1415.2  8.82954
  1415.03  8.82694
  1414.87  8.84582
  1414.71  8.84582
  1414.54  8.85037
  1414.38    8.866
  1414.21  8.85753
  1414.05  8.86535
  1413.89  8.87381
  1413.72  8.86209
  1413.56  8.86535
   1413.4  8.86014
  1413.23  8.85753
  1413.07  8.87186
  1412.91   8.8699
  1412.74  8.85233
  1412.58    8.866
  1412.42  8.86665
  1412.25  8.86144
  1412.09   8.8354
  1411.93  8.82238
  1411.76  8.80936
   1411.6  8.81848
  1411.44  8.82303
  1411.27  8.83931
  1411.11  8.86144
  1410.95   8.8686
  1410.78   8.8686
  1410.62  8.88032
  1410.45  8.84061
  1410.29  8.81587
  1410.13  8.81848
  1409.96  8.80741
   1409.8  8.81132
  1409.64  8.85688
  1409.47    8.866
  1409.31  8.88487
  1409.15  8.89138
  1408.98  8.88292
  1408.82  8.88683
  1408.66  8.87837
  1408.49   8.8699
  1408.33  8.86535
  1408.17  8.89203
     1408  8.91156
  1407.84  8.90766
  1407.68  8.91156
  1407.51  8.89789
  1407.35  8.91742
  1407.18  8.90701
  1407.02  8.91417
  1406.86  8.90636
  1406.69  8.88032
  1406.53  8.84386
  1406.37  8.84452
   1406.2  8.85233
  1406.04  8.84452
  1405.88  8.84061
  1405.71  8.84907
  1405.55  8.84452
  1405.39   8.8686
  1405.22  8.89399
  1405.06  8.89399
   1404.9  8.91156
  1404.73  8.91091
  1404.57  8.91287
  1404.41  8.92198
  1404.24  8.92719
  1404.08  8.92588
  1403.91  8.93955
  1403.75  9.03394
  1403.59  9.04826
  1403.42  9.05217
  1403.26  9.05412
   1403.1  9.05152
  1402.93  9.04501
  1402.77  9.01767
  1402.61  9.00595
  1402.44  8.99423
  1402.28   9.0079
  1402.12   9.0027
  1401.95  8.99749
  1401.79  8.98512
  1401.63  8.96364
  1401.46  8.91742
   1401.3  8.92003
  1401.14  8.95843
  1400.97  8.96364
  1400.81  8.99619
  1400.64  9.01311
  1400.48  9.01246
  1400.32  8.92458
  1400.15  8.91156
  1399.99  8.90766
  1399.83  8.91156
  1399.66  8.91091
   1399.5  8.91287
  1399.34  8.91091
  1399.17  8.90505
  1399.01   8.9044
  1398.85   8.9005
  1398.68  8.90505
  1398.52  8.89464
  1398.36   8.9031
  1398.19  8.90766
  1398.03   8.9005
  1397.87  8.88683
   1397.7  8.86665
  1397.54  8.86339
  1397.38  8.86404
  1397.21  8.85753
  1397.05  8.85363
  1396.88  8.85558
  1396.72  8.85688
  1396.56  8.85884
  1396.39  8.85233
  1396.23  8.85363
  1396.07  8.86014
   1395.9  8.85493
  1395.74  8.84647
  1395.58  8.86144
  1395.41  8.87381
  1395.25  8.88683
  1395.09  8.89594
  1394.92  8.88813
  1394.76  8.89789
   1394.6  8.88487
  1394.43  8.89594
  1394.27  8.89334
  1394.11  8.88683
  1393.94  8.87902
  1393.78  8.87706
  1393.61  8.87641
  1393.45  8.87641
  1393.29  8.88032
```

GEOFRAME
PROCESSED
INTERPRETATION

Integrated Log Well Montage

Initial Processed Data

*A Mark of Schlumberger

Using the following logs: CMR*, CNL*, TLD*
AIT*, FMI*
ECS*, NGT*

COMPANY:	Kleinfelder		
WELL:	R-26		
FIELD:	Canon de Valle, Just East of Hwy 4		
COUNTY:	Los Alamos		
STATE:	New Mexico		
COUNTRY:	U.S.		
Date Logged:	28-Sep-2003	Date Processed:	7-Oct-2003
Well Location:	Easting: 1,610,220		
	Northing: 1,764,690		
Elevations:	KB:	DF:	GL: 7639.00 ft
API Number:		Job Number:	

FOLD HERE The well name, location, borehole reference data were furnished by the customer.

All interpretations are opinions based on inferences from electrical or other measurements and we cannot, and do not guarantee the accuracy or correctness of any interpretation, and we shall not, except in the case of gross or wilful negligence on our part, be liable or responsible for any loss, costs, damages or expenses incurred or sustained by anyone resulting from any interpretation made by any of our officers, agents or employees. These interpretations are also subject to Clause 4 of our General Terms and Conditions as set out in our current Price Schedule.

Field Recording:	Location:	Farmington	Software Version:	11C0-305	Engineer: Tom Hansen
Office Recording:	ICS Center:	SWS Sacramento	Baseline:	GF3.8.1	Log Analyst: Ned Clayton

Mud and Borehole Measurements:			
Rm @ Measured temperature: 2.860 ohm.m @83.0 degF	BHT: 82.0 degF	Bitsize: 12.2 in	
Rmf @ Measured temperature: 2.145 ohm.m @83.0 degF	Type Fluid in Hole	Air / Fresh Water	
Rmc @ Measured temperature: 4.290 ohm.m @83.0 degF	Mud Density: 8.34 lbm/gal		

Remarks:

AIT-NGT tool run serves as primary depth reference.
AIT-NGT tool run serves as primary depth reference.
Water level between ~435' and 456' during logging.
ELAN* integrated log analysis performed with no porosity or water saturation constraints.

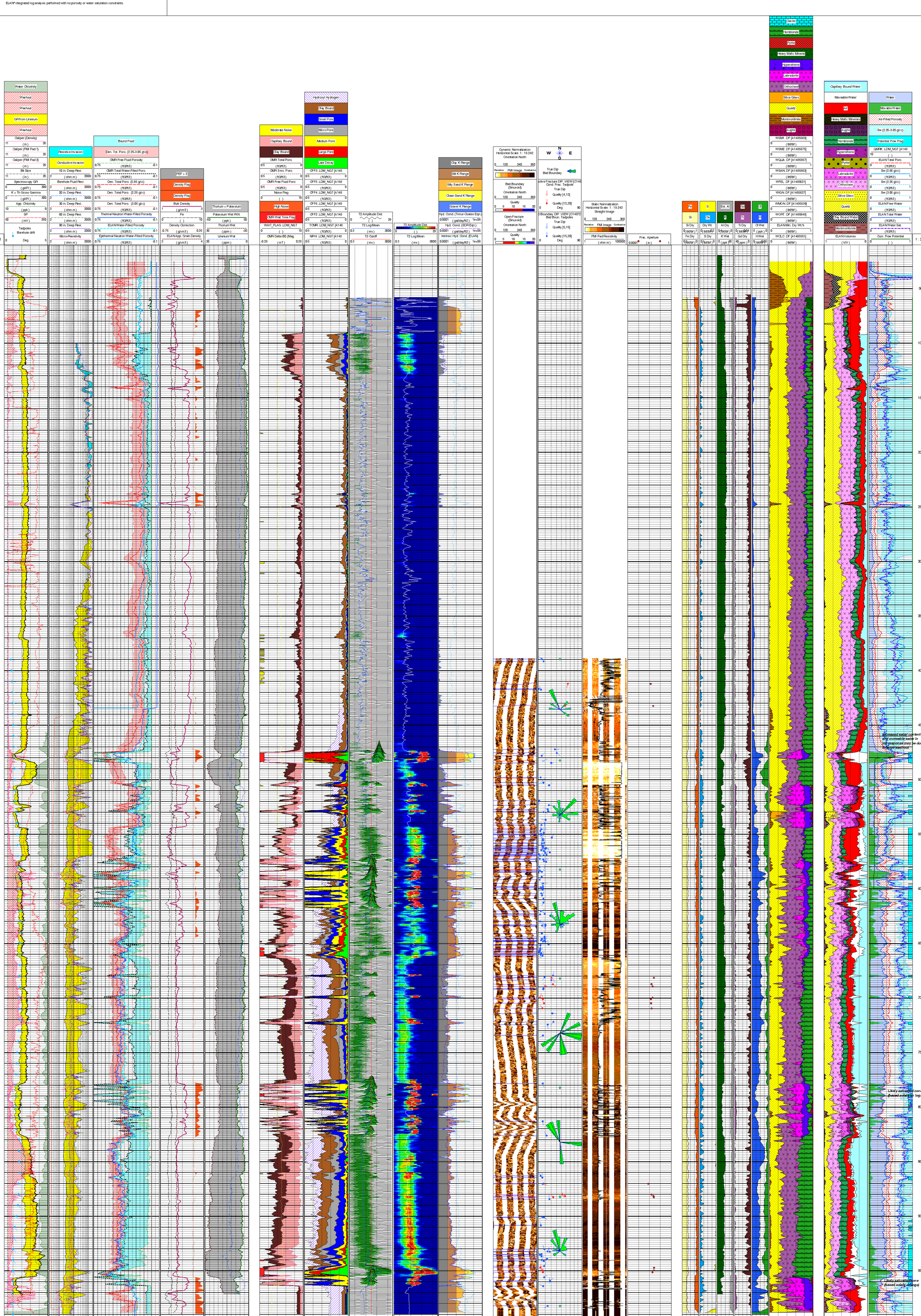

Chlorinity

Washout

Gross Gamma

0 (gAPI) 250

Bit Size Dia.

7 (in) 22

Caliper Dia.

7 (in) 22

Chlorinity

20 (ppk) 0

MD

1 : 3600

Water-filled Poro.

Effec. Water Poro.

Air-Filled Porosity

Total Porosity

0 (ft3/ft3) 0.8

Moveable Water

0 (ft3/ft3) 0.8

Water-filled Poro.

0 (ft3/ft3) 0.8

Water Saturation

0 (ft3/ft3) 1

Hydraulic Cond.

0.001 (gal/day/ft^2) 100000

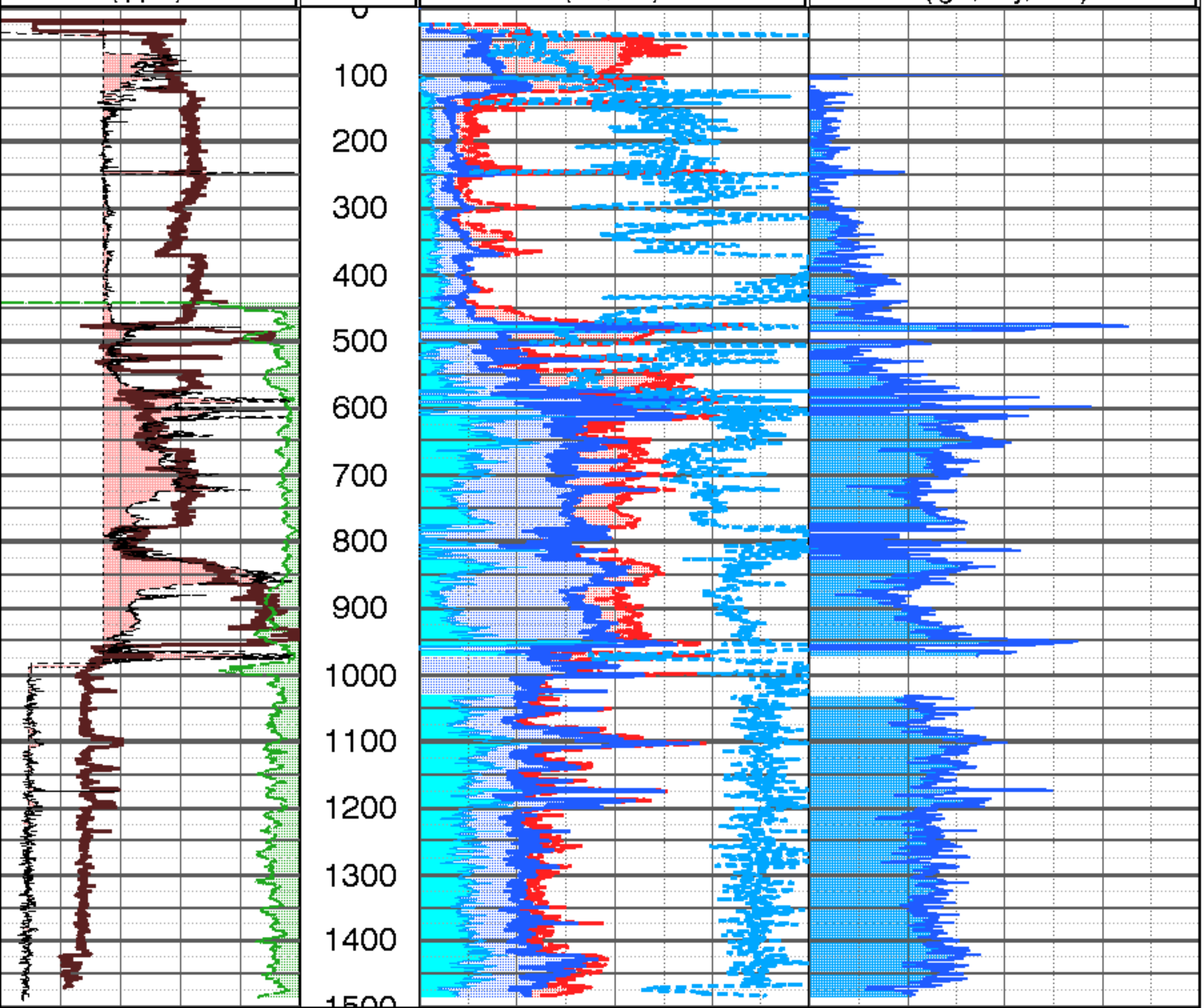

GEOFRAME PROCESSED INTERPRETATION

Integrated Log Well Montage

Initial Processed Data - Merged Runs

* A Mark of Schlumberger

Using the following logs:	TLD*, CNL*, CMR* NGT*, ECS* FMI*, AIT*

COMPANY: Kleinfelder
WELL: R-26
FIELD: LANL Characterization and Monitoring Wells
COUNTY: Los Alamos
STATE: New Mexico
COUNTRY: U.S.
Date Logged: 28-Sep-03 / 14-Oct-2003 Date Processed: 30-Oct-2003
Well Location: Easting: 1,610,220 ft
Northing: 1,764,690
Elevations: KB: DF: GL: 7639.00 ft
API Number: Job Number:

FOLD HERE The well name, location, borehole reference data were furnished by the customer.

All interpretations are opinions based on inferences from electrical or other measurements and we cannot, and do not guarantee the accuracy or correctness of any interpretation, and we shall not, except in the case of gross or willful negligence on our part, be liable or responsible for any loss, costs, damages or expenses incurred or sustained by anyone resulting from any interpretations made by any of our officers, agents or employees. These interpretations are also subject to Clause 4 of our General Terms and Conditions as set out in our current Price Schedule.

Field Recording:	Location:	Farmington	Software Version:	11C0-305	Engineer:	Keith MacPhail
Office Recording:	ICS Center:	SWS Sacramento	Baseline:	GF3.8.1	Log Analyst:	Ned Clayton

Mud and Borehole Measurements:

Rm @ Measured temperature: 3.800 ohm.m @75.0 degF	BHT: 82.0 degF	Bitsize:	12.25 / 8.5 in
Rmf @ Measured temperature: @	Type Fluid in Hole	Air / Water / Drilling Mud	
Rmc @ Measured temperature: @	Mud Density: 8.73 lbm/gal		

Remarks:

- Merged logs from Runs 1 and 2
- Run 1 AIT-NGT logs are primary depth reference.
- Gross gamma ray log used for depth correlation.
- ELAN* integrated log analysis performed without porosity or water saturation constraints.
- Hole filled with water/mud below 444 ft at time of Run 1 logging.

GEOFRAME
PROCESSED
INTERPRETATION

Integrated Log Well Montage

Initial Processed Data - Merged Runs

*A Mark of Schlumberger

Using the following logs: TLD*, CNL*, CMR*
NGT*, ECS*
FMI*, AIT*

COMPANY: Kleinfelder
WELL: R-26
FIELD: LANL Characterization and Monitoring Wells
COUNTY: Los Alamos
STATE: New Mexico
COUNTRY: U.S.
Date Logged: 28-Sep-03 / 14-Oct-2003 Date Processed: 30-Oct-2003
Well Location: Easting: 1,610,220 ft
Northing: 1,764,690
Elevations: KB: DF: GL: 7639.00 ft
API Number: Job Number:

FOLD HERE The well name, location, borehole reference data were furnished by the customer.

All interpretations are opinions based on inferences from electrical or other measurements and we cannot, and do not guarantee the accuracy or correctness of any interpretation, and we shall not, except in the case of gross or willful negligence on our part, be liable or responsible for any loss, costs, damages or expenses incurred or sustained by anyone resulting from any interpretations made by any of our officers, agents or employees. These interpretations are also subject to Clause 4 of our General Terms and Conditions as set out in our current Price Schedule.

Field Recording:	Location:	Farmington	Software Version:	11C0-305	Engineer:	Keith MacPhail
Office Recording:	ICS Center:	SWS Sacramento	Baseline:	GF3.8.1	Log Analyst:	Ned Clayton

Mud and Borehole Measurements:

Rm @ Measured temperature: 3.800 ohm.m @75.0 degF	BHT: 82.0 degF	Bitsize:	12.25 / 8.5 in
Rmf @ Measured temperature: @	Type Fluid in Hole	Air / Water / Drilling Mud	
Rmc @ Measured temperature: @	Mud Density: 8.73 lbm/gal		

Remarks:

Merged logs from Runs 1 and 2
Run 1 AIT-NGT logs are primary depth reference.
Gross gamma ray log used for depth correlation.
ELAN* integrated log analysis performed without porosity or water saturation constraints.
Hole filled with water/mud below 444 ft at time of Run 1 logging.

GEOFRAME
PROCESSED
INTERPRETATION

Integrated Log Well Montage

Initial Processed Data - Merged Runs

*A Mark of Schlumberger

Using the following logs:	TLD*, CNL*, CMR* NGT*, ECS* FMI*, AIT*

COMPANY:	Kleinfelder			
WELL:	R-26			
FIELD:	LANL Characterization and Monitoring Wells			
COUNTY:	Los Alamos			
STATE:	New Mexico			
COUNTRY:	U.S.			
Date Logged:	28-Sep-03 / 14-Oct-2003	Date Processed: 30-Oct-2003		
Well Location:	Easting: 1,610,220 ft			
	Northing: 1,764,690			
Elevations:	KB:	DF:	GL:	7639.00 ft
API Number:		Job Number:		

FOLD HERE The well name, location, borehole reference data were furnished by the customer.

All interpretations are opinions based on inferences from electrical or other measurements and we cannot, and do not guarantee the accuracy or correctness of any interpretation, and we shall not, except in the case of gross or wilful negligence on our part, be liable or responsible for any loss, costs, damages or expenses incurred or sustained by anyone resulting from any interpretations made by any of our officers, agents or employees. These interpretations are also subject to Clause 4 of our General Terms and Conditions as set out in our current Price Schedule.

Field Recording:	Location:	Farmington	Software Version:	11C0-305	Engineer:	Keith MacPhail	
Office Recording:	ICS Center:	SWS Sacramento	Baseline:	GF3.8.1	Log Analyst:	Ned Clayton	

Mud and Borehole Measurements:

Rm @ Measured temperature: 3.800 ohm.m @75.0 degF	BHT: 82.0 degF	Bitsize:	12.25 / 8.5 in
Rmf @ Measured temperature: @	Type Fluid in Hole	Air / Water / Drilling Mud	
Rmc @ Measured temperature: @	Mud Density: 8.73 lbm/gal		

Remarks:

Merged logs from Runs 1 and 2
Run 1 AIT-NGT logs are primary depth reference.
Gross gamma ray log used for depth correlation.
ELAN* integrated log analysis performed without porosity or water saturation constraints.
Hole filled with water/mud below 444 ft at time of Run 1 logging.

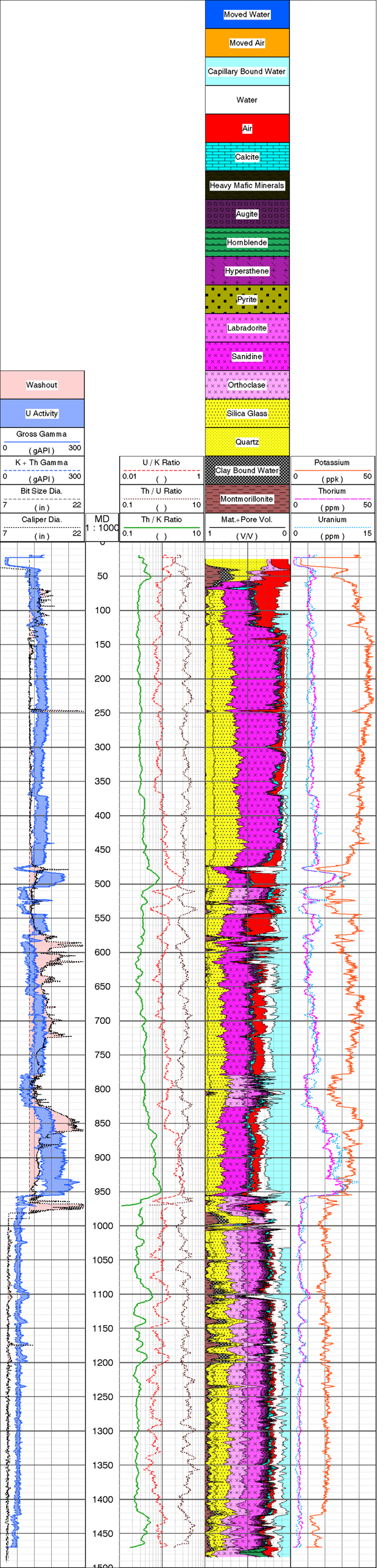
Moved Water
Moved Air
Capillary Bound Water
Water
Air
Calcite
Heavy Mafic Minerals
Augite
Hornblende
Hypersthene
Pyrite
Labradorite
Sanidine
Orthoclase
Silica Glass
Quartz
Clay Bound Water
Montmorillonite
Washout
U Activity
Gross Gamma
0 (gAPI) 300
K + Th Gamma
0 (gAPI) 300
Bit Size Dia.
7 (in) 22
Caliper Dia.
7 (in) 22
MD
1 : 1000
U / K Ratio
0.01 ( ) 1
Th / U Ratio
0.1 ( ) 10
Th / K Ratio
0.1 ( ) 10
Mat.+Pore Vol.
1 (V/V) 0
Potassium
0 (ppk) 50
Thorium
0 (ppm) 50
Uranium
0 (ppm) 15
0
50
100
150
200
250
300
350
400
450
500
550
600
650
700
750
800
850
900
950
1000
1050
1100
1150
1200
1250
1300
1350
1400
1450
1500

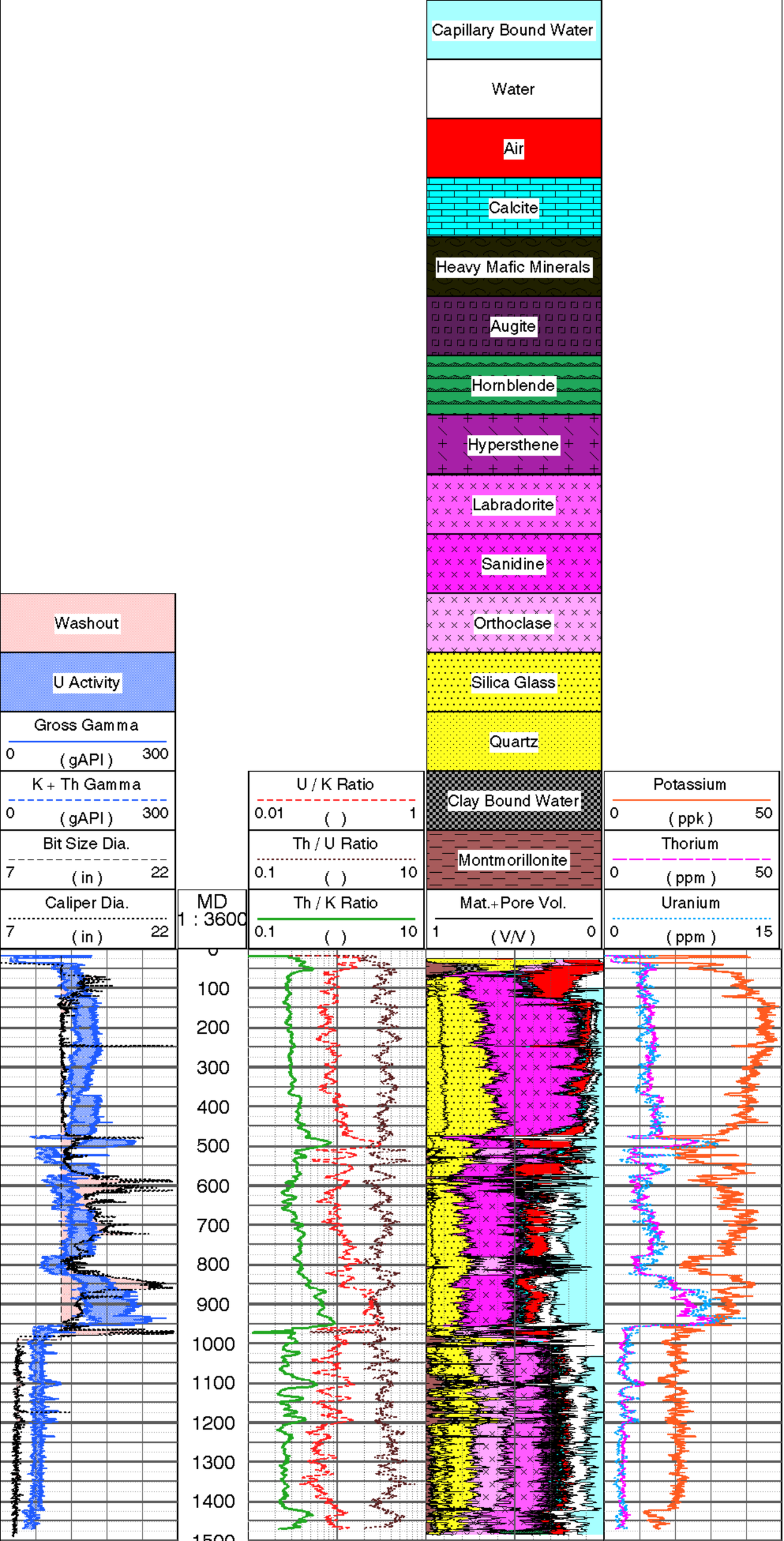
Capillary Bound Water
Water
Air
Calcite
Heavy Mafic Minerals
Augite
Hornblende
Hypersthene
Labradorite
Sanidine
Orthoclase
Silica Glass
Quartz
Clay Bound Water
Montmorillonite
Washout
U Activity
Gross Gamma
0 (gAPI) 300
K + Th Gamma
0 (gAPI) 300
Bit Size Dia.
7 (in) 22
Caliper Dia.
7 (in) 22
MD
1 : 3600
U / K Ratio
0.01 ( ) 1
Th / U Ratio
0.1 ( ) 10
Th / K Ratio
0.1 ( ) 10
Mat.+Pore Vol.
1 (V/V) 0
Potassium
0 (ppk) 50
Thorium
0 (ppm) 50
Uranium
0 (ppm) 15
0
100
200
300
400
500
600
700
800
900
1000
1100
1200
1300
1400
1500

Washout

Gross Gamma
0 (gAPI) 300

Bit Size
7 (in) 22

Caliper Dia.
7 (in) 22

MD
1 : 3600

Pef
0 ( ) 10

App. Grain Density
1 (g/cm3) 3

Bulk Density
1 (g/cm3) 3

Vol. Clay (No Phi)

Vol. Clay (No Phi)
0 (ft3/ft3) 1

ELAN Total Porosity
1 (ft3/ft3) 0

Vol. Clay (w/ Phi)
0 (ft3/ft3) 1

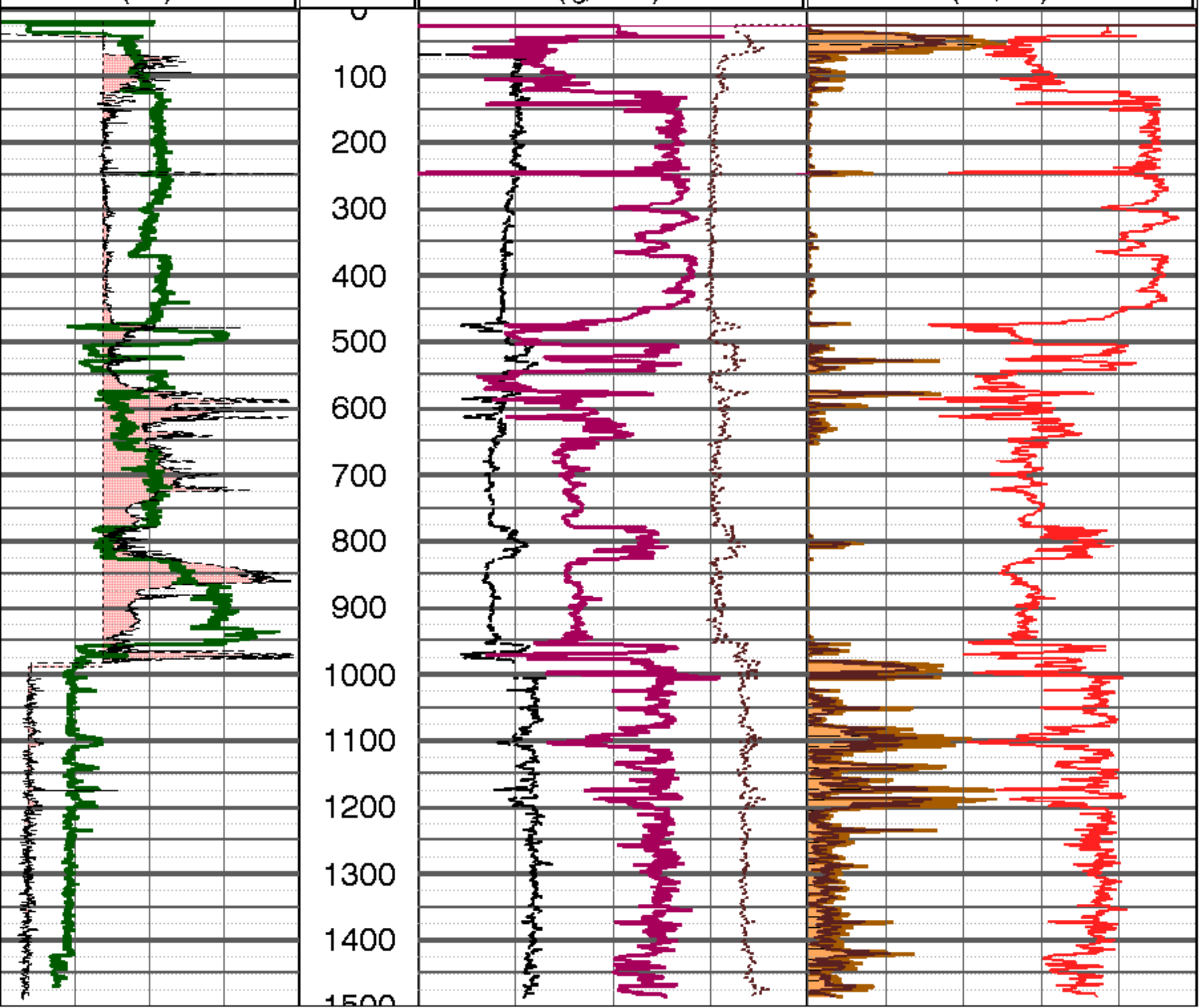

```
~VERSION INFORMATION
VERS.    2.0                 :CWLS LOG ASCII STANDARD-VERSION 2.0
WRAP.    NO                  :ONE LINE PER DEPTH STEP
~WELL INFORMATION
STRT    .FT        7.90675   :START DEPTH
STOP    .FT        6.75846   :STOP DEPTH
STEP    .FT              0   :STEP
NULL    .          -999.25   :NULL VALUE
COMP    .      Kleinfelder   :COMPANY
WELL    .                    :WELL
FLD     .                    :FIELD
LOC     .                    :LOCATION
PROV    .              N/A   :PROVINCE
SRVC    .              N/A   :SERVICE COMPANY
DATE    .        9/15/2003   :DATE
UWI     .              N/A   :UNIQUE WELL ID
~CURVE INFORMATION
DEPT    .FT                  :DEPTH
COND    .MS/M                :Cond.
GAMM    .CPS                 :Gamma
I__R    .OHM-M               :I. Res.
~PARAMETER INFORMATION
ELEV    .                    :ELEVATION
STE     .                    :STE
DENS    .                    :DENSITY
CASI    .          60'       :CASING TO1
OPER    .                    :OPERATING RIG TIME
WGT1    .                    :WGT1
CASI    .          4.25" ID A :CASING SIZE1
CASI    .                    :CASING TO2
WGT2    .                    :WGT2
CASI    .                    :CASING SIZE2
WELL    .          R-26 Core :WELL ID
CASI    .                    :CASING TO3
K.B.    .                    :K.B.
WGT3    .                    :WGT3
TYPE    .                    :TYPE LOG
CASI    .                    :CASING SIZE3
CASI    .                    :CASING TO4
SALI    .                    :SALINITY
TITL    .                    :TITLE
WGT4    .                    :WGT4
TOP     .                    :TOP LOGGED INTERVAL
CASI    .                    :CASING SIZE4
WITN    .                    :WITNESSED BY
CASI    .                    :CASING TO5
DRIL    .                    :DRILLING MEAS. FROM
WGT5    .                    :WGT5
CASI    .                    :CASING SIZE5
CTY     .                    :CTY
WGT6    .                    :WGT6
CASI    .                    :CASING SIZE6
MAX.    .                    :MAX. REC. TEMP.
D.F.    .                    :D.F.
CASI    .                    :CASING TO6
OTHE    .                    :OTHER SERVICES
BIT1    .          4.25" ID A :BIT1
DEPT    .                    :DEPTH-DRILLER
BIT2    .          4" OD HQ  :BIT2
RUN     .                    :RUN No
RUN1    .                    :RUN1
BIT3    .                    :BIT3
RUN2    .                    :RUN2
PERM    .                    :PERMANENT DATUM
TWP     .                    :TWP
BIT4    .                    :BIT4
LOG     .                    :LOG MEAS. FROM
BIT     .                0   :BIT FROM1
RUN3    .                    :RUN3
BIT5    .                    :BIT5
CASI    .                0   :CASING FROM1
TYPE    .                    :TYPE FLUID IN HOLE
RUN4    .                    :RUN4
FLD     .                    :FLD
BIT6    .                    :BIT6
BIT     .          60'       :BIT TO1
CASI    .                    :CASING FROM2
BIT     .               60   :BIT FROM2
CO      .                    :CO
RGE     .                    :RGE
BIT     .          250'      :BIT TO2
DEPT    .                    :DEPTH-LOGGER
CASI    .                    :CASING FROM3
BIT     .                    :BIT FROM3
RUN5    .                    :RUN5
SEC     .                    :SEC
BIT     .                    :BIT TO3
G.L.    .                    :G.L.
CASI    .                    :CASING FROM4
BIT     .                    :BIT FROM4
RUN6    .                    :RUN6
BIT     .                    :BIT TO4
BTM     .                    :BTM LOGGED INTERVAL
CASI    .                    :CASING FROM5
BIT     .                    :BIT FROM5
STAT    .                    :STATE
BIT     .                    :BIT TO5
LEVE    .                    :LEVEL
CASI    .                    :CASING FROM6
BIT     .                    :BIT FROM6
COUN    .                    :COUNTRY
RECO    .          M. Everett :RECORDED BY
FILI    .                    :FILING No
BIT     .                    :BIT TO6
~OTHER
~A
7.90675 -154.116 102.668 -6.48863
8.07079 -173.345 99.1875 -5.76885
8.23483 -185.416 101.359 -5.39328
8.39887 -166.528 91.0703 -6.00499
8.56291 -125.196 99.7266 -7.98744
8.72695 -150.111 106.008 -6.66175
8.89099 -166.048 96.7734 -6.02235
9.05503 -157.443 81.75 -6.35151
9.21907 -128.204 115.805 -7.80009
9.38311 -139.39 89.2617 -7.17411
9.54715 -189.894 84.9023 -5.2661
9.71119 -220.383 89.4727 -4.53756
9.87523 -230.929 83.3828 -4.33034
10.0393 -230.929 72.375 -4.33034
10.2033 -230.929 97.8008 -4.33034
10.3674 -230.929 65.9219 -4.33034
10.5314 -230.929 98.1875 -4.33034
10.6954 -230.929 83.9609 -4.33034
10.8595 -230.929 103.602 -4.33034
11.0235 -230.929 90.1563 -4.33034
11.1876 -230.929 135.414 -4.33034
11.3516 -230.929 84.7617 -4.33034
11.5156 -230.929 125.707 -4.33034
11.6797 -230.929 91.2422 -4.33034
11.8437 -228.852 110.352 -4.36964
12.0078 -188.682 79.7344 -5.29992
12.1718 -150.958 98.2578 -6.62437
12.3358 -118.396 103.457 -8.44622
12.4999 -214.069 107.875 -4.67138
12.6639 -230.929 118.996 -4.33034
12.828 -230.929 117.469 -4.33034
12.992 -230.929 104.785 -4.33034
13.156 -230.929 90.8906 -4.33034
13.3201 -230.929 140.555 -4.33034
13.4841 -230.929 78.7773 -4.33034
13.6482 -230.929 112.984 -4.33034
13.8122 -230.929 103.297 -4.33034
13.9762 -230.929 132.758 -4.33034
14.1403 -230.929 86.5352 -4.33034
14.3043 -230.929 116.801 -4.33034
14.4684 -230.929 114.938 -4.33034
14.6324 -230.929 104.867 -4.33034
14.7964 -230.929 89.3398 -4.33034
14.9605 -230.929 105.605 -4.33034
15.1245 -230.929 79.7461 -4.33034
15.2886 -230.929 48.3965 -4.33034
15.4526 -230.929 72.9883 -4.33034
15.6166 -230.929 72.457 -4.33034
15.7807 -230.929 106.113 -4.33034
15.9447 -230.929 93.7617 -4.33034
16.1088 -230.929 111.305 -4.33034
16.2728 -230.929 117.996 -4.33034
16.4368 -230.929 114.043 -4.33034
16.6009 -230.929 126.047 -4.33034
16.7649 -230.929 98.5586 -4.33034
16.929 -230.929 108.02 -4.33034
17.093 -230.929 77.0039 -4.33034
17.257 -230.929 138.289 -4.33034
17.4211 -230.929 99.6602 -4.33034
17.5851 -230.929 99.543 -4.33034
17.7492 -230.929 136.766 -4.33034
17.9132 -230.929 117.57 -4.33034
18.0772 -230.929 101.004 -4.33034
18.2413 -230.929 95.3867 -4.33034
18.4053 -230.929 105.547 -4.33034
18.5694 -230.929 101.996 -4.33034
18.7334 -230.929 113.352 -4.33034
18.8974 -230.929 101.617 -4.33034
19.0615 -230.929 107.203 -4.33034
19.2255 -230.929 87.875 -4.33034
19.3896 -230.929 100.672 -4.33034
19.5536 -230.929 109.262 -4.33034
19.7177 -230.929 147.609 -4.33034
19.8817 -230.929 105.938 -4.33034
20.0457 -230.929 90.0039 -4.33034
20.2098 -230.929 64.8711 -4.33034
20.3738 -230.929 67.1094 -4.33034
20.5379 -230.929 89.582 -4.33034
20.7019 -230.929 89.582 -4.33034
20.8659 -230.929 123.746 -4.33034
21.03 -230.929 141.891 -4.33034
21.194 -230.929 108.793 -4.33034
21.3581 -230.929 133.266 -4.33034
21.5221 -230.929 108.93 -4.33034
21.6861 -230.929 129.07 -4.33034
21.8502 -230.929 99.1563 -4.33034
22.0142 -230.929 90.0742 -4.33034
22.1783 -230.929 74.418 -4.33034
22.3423 -230.929 112.117 -4.33034
22.5063 -230.929 128.992 -4.33034
22.6704 -230.929 97.6445 -4.33034
22.8344 -230.929 78.832 -4.33034
22.9985 -230.929 77.9883 -4.33034
23.1625 -230.929 86.418 -4.33034
23.3265 -230.929 100.129 -4.33034
23.4906 -230.929 115.91 -4.33034
23.6546 -230.929 79.5156 -4.33034
23.8187 -230.929 92.6484 -4.33034
23.9827 -230.929 108.695 -4.33034
24.1467 -230.929 91.4336 -4.33034
24.3108 -230.929 99.8398 -4.33034
24.4748 -230.929 75.168 -4.33034
24.6389 -230.929 89.3438 -4.33034
24.8029 -230.929 77.2852 -4.33034
24.9669 -230.929 86.2578 -4.33034
25.131 -230.929 69.6797 -4.33034
25.295 -230.929 74.9492 -4.33034
25.4591 -230.929 54.8438 -4.33034
25.6231 -230.929 58.1543 -4.33034
25.7871 -230.929 112.73 -4.33034
25.9512 -230.929 98.4141 -4.33034
26.1152 -230.929 74.6328 -4.33034
26.2793 -230.929 83.7617 -4.33034
26.4433 -230.929 92.7891 -4.33034
26.6073 -230.929 72.6406 -4.33034
26.7714 -230.929 69.9883 -4.33034
26.9354 -230.929 86.4063 -4.33034
27.0995 -230.929 92.4375 -4.33034
27.2635 -218.863 102.906 -4.56907
27.4275 -210.188 91.8203 -4.75765
27.5916 -230.929 53.3457 -4.33034
27.7556 -230.929 62.1934 -4.33034
27.9197 -230.929 104.008 -4.33034
28.0837 -230.929 96.2305 -4.33034
28.2477 -230.929 95.1914 -4.33034
28.4118 -230.929 98.4258 -4.33034
28.5758 -230.929 81.7773 -4.33034
28.7399 -230.929 114.063 -4.33034
28.9039 -230.929 109.805 -4.33034
29.068 -230.929 92.3359 -4.33034
29.232 -230.929 97.9063 -4.33034
29.396 -230.929 91.9141 -4.33034
29.5601 -230.929 115.258 -4.33034
29.7241 -230.929 95.4648 -4.33034
29.8882 -230.929 123.539 -4.33034
30.0522 -230.929 95.4258 -4.33034
30.2162 -230.929 52.2559 -4.33034
30.3803 -230.929 55.2285 -4.33034
30.5443 -230.929 52.1406 -4.33034
30.7084 -230.929 81.293 -4.33034
30.8724 -230.929 91.2773 -4.33034
31.0364 -230.929 110.02 -4.33034
31.2005 -230.929 84.1719 -4.33034
31.3645 -230.929 52.0742 -4.33034
31.5286 -230.929 97.1445 -4.33034
31.6926 -230.929 88.9883 -4.33034
31.8566 -230.929 99.6484 -4.33034
32.0207 -230.929 71.1953 -4.33034
32.1847 -230.203 59.3574 -4.344
32.3488 -186.807 95.1797 -5.35313
32.5128 -218.375 97.8047 -4.57927
32.6768 -230.929 79.3008 -4.33034
32.8409 -230.929 80.8906 -4.33034
33.0049 -230.929 110.094 -4.33034
33.169 -230.929 90.0234 -4.33034
33.333 -230.929 84.4102 -4.33034
33.497 -230.929 77.5234 -4.33034
33.6611 -230.929 86.3281 -4.33034
33.8251 -230.929 105.953 -4.33034
33.9892 -230.929 81.1367 -4.33034
34.1532 -230.929 113.945 -4.33034
34.3172 -230.929 86.6953 -4.33034
34.4813 -230.929 102.879 -4.33034
34.6453 -230.929 120.801 -4.33034
34.8094 -230.929 75.4258 -4.33034
34.9734 -230.929 81.4063 -4.33034
35.1374 -230.929 46.5703 -4.33034
35.3015 -230.929 57.2012 -4.33034
35.4655 -230.929 56.9355 -4.33034
35.6296 -230.929 63.6523 -4.33034
35.7936 -230.929 107.734 -4.33034
35.9576 -230.929 81.75 -4.33034
36.1217 -230.929 96.1289 -4.33034
36.2857 -230.929 103.512 -4.33034
36.4498 -230.929 62.457 -4.33034
36.6138 -230.929 73.8516 -4.33034
36.7778 -230.929 112.754 -4.33034
36.9419 -230.929 83.2422 -4.33034
37.1059 -230.929 87.9336 -4.33034
37.27 -230.929 76.1484 -4.33034
37.434 -230.929 98.707 -4.33034
37.5981 -230.929 86.9102 -4.33034
37.7621 -230.929 84.5898 -4.33034
37.9261 -230.929 75.4961 -4.33034
38.0902 -230.929 75.1953 -4.33034
38.2542 -230.929 113.145 -4.33034
38.4183 -230.929 110.988 -4.33034
38.5823 -230.929 81.2344 -4.33034
38.7463 -230.929 98.6445 -4.33034
38.9104 -230.929 80.2891 -4.33034
39.0744 -230.929 77.3164 -4.33034
39.2385 -230.929 104.25 -4.33034
39.4025 -230.929 98.4766 -4.33034
39.5665 -230.929 93.168 -4.33034
39.7306 -230.929 67.7344 -4.33034
39.8946 -230.929 77.7656 -4.33034
40.0587 -230.929 68.8594 -4.33034
40.2227 -230.929 57.7637 -4.33034
40.3867 -230.929 79.4453 -4.33034
40.5508 -230.929 66.0039 -4.33034
40.7148 -230.929 101.074 -4.33034
40.8789 -230.929 87.543 -4.33034
41.0429 -230.929 113.406 -4.33034
41.2069 -230.929 88.3438 -4.33034
41.371 -230.929 110.129 -4.33034
41.535 -230.929 88.0195 -4.33034
41.6991 -230.929 121.582 -4.33034
41.8631 -230.929 66.918 -4.33034
42.0271 -230.929 112.59 -4.33034
42.1912 -230.929 71.7383 -4.33034
42.3552 -230.929 94.7227 -4.33034
42.5193 -230.929 83.0703 -4.33034
42.6833 -230.929 103.641 -4.33034
42.8473 -230.929 103.809 -4.33034
43.0114 -230.929 116.379 -4.33034
43.1754 -230.929 91.8672 -4.33034
43.3395 -230.929 120.895 -4.33034
43.5035 -230.929 118.422 -4.33034
43.6675 -230.929 85.6563 -4.33034
43.8316 -230.929 89.6094 -4.33034
43.9956 -230.929 107.105 -4.33034
44.1597 -230.929 104.383 -4.33034
44.3237 -230.929 95.4375 -4.33034
44.4877 -230.929 95.0898 -4.33034
44.6518 -230.929 71.1914 -4.33034
44.8158 -230.929 71.0547 -4.33034
44.9799 -230.929 86.2266 -4.33034
45.1439 -230.929 62.7773 -4.33034
45.3079 -230.929 60.1563 -4.33034
45.472 -230.929 39.1191 -4.33034
45.636 -230.929 55.1309 -4.33034
45.8001 -230.929 85.5859 -4.33034
45.9641 -230.929 72.9766 -4.33034
46.1281 -230.929 82.0625 -4.33034
46.2922 -230.929 85.5273 -4.33034
46.4562 -230.929 109.598 -4.33034
46.6203 -230.929 118.191 -4.33034
46.7843 -230.929 104.641 -4.33034
46.9484 -230.929 91.9375 -4.33034
47.1124 -230.929 77.3867 -4.33034
47.2764 -230.929 62.6543 -4.33034
47.4405 -230.929 45.0664 -4.33034
47.6045 -230.929 62.5859 -4.33034
47.7686 -230.929 70.8867 -4.33034
47.9326 -230.929 70.6797 -4.33034
48.0966 -230.929 67.8555 -4.33034
48.2607 -230.929 94.6211 -4.33034
48.4247 -230.929 80.4141 -4.33034
48.5888 -230.929 121.215 -4.33034
48.7528 -230.929 65.168 -4.33034
48.9168 -230.929 74.5273 -4.33034
49.0809 -230.929 107.848 -4.33034
49.2449 -230.929 110 -4.33034
49.409 -230.929 92 -4.33034
49.573 -230.929 62.1641 -4.33034
49.737 -230.929 84.1367 -4.33034
49.9011 -230.929 78.4805 -4.33034
50.0651 -230.929 65.7422 -4.33034
50.2292 -230.929 45.9805 -4.33034
50.3932 -230.929 58.7598 -4.33034
50.5572 -230.929 58.1816 -4.33034
50.7213 -230.929 80.4063 -4.33034
50.8853 -230.929 65.7031 -4.33034
51.0494 -230.929 77.2539 -4.33034
51.2134 -230.929 83.0156 -4.33034
51.3774 -230.929 93.6094 -4.33034
51.5415 -230.929 69.4922 -4.33034
51.7055 -230.929 75.7852 -4.33034
51.8696 -230.929 96.2617 -4.33034
52.0336 -230.929 87.2539 -4.33034
52.1976 -230.929 77.582 -4.33034
52.3617 -230.929 62.4727 -4.33034
52.5257 -230.929 90.4141 -4.33034
52.6898 -230.929 141.656 -4.33034
52.8538 -230.929 120.594 -4.33034
53.0178 -230.929 72.1484 -4.33034
53.1819 -230.929 95.6953 -4.33034
53.3459 -230.929 62.7363 -4.33034
53.51 -230.929 90.6367 -4.33034
53.674 -230.929 63.3809 -4.33034
53.838 -230.929 57.5391 -4.33034
54.0021 -230.929 115.598 -4.33034
54.1661 -230.929 77.4492 -4.33034
54.3302 -230.929 114.879 -4.33034
54.4942 -230.929 81.8945 -4.33034
54.6582 -230.929 88.4102 -4.33034
54.8223 -230.929 87.875 -4.33034
54.9863 -230.929 67.9336 -4.33034
55.1504 -230.929 71.6602 -4.33034
55.3144 -230.929 64.9219 -4.33034
55.4784 -230.929 61.6992 -4.33034
55.6425 -230.929 64.9492 -4.33034
55.8065 -230.929 73.2266 -4.33034
55.9706 -230.929 91.3086 -4.33034
56.1346 -230.929 106.188 -4.33034
56.2987 -230.929 98.0391 -4.33034
56.4627 -230.929 94.0781 -4.33034
56.6267 -230.929 114.598 -4.33034
56.7908 -230.929 127.988 -4.33034
56.9548 -230.929 117.293 -4.33034
57.1189 -230.929 130.281 -4.33034
57.2829 -230.929 129.328 -4.33034
57.4469 -230.929 83.9102 -4.33034
57.611 -230.929 100.813 -4.33034
57.775 -230.929 137.563 -4.33034
57.9391 -230.929 98.6484 -4.33034
58.1031 -230.929 130.086 -4.33034
58.2671 -230.929 88.168 -4.33034
58.4312 -230.929 114.723 -4.33034
58.5952 -230.929 95.9492 -4.33034
58.7593 -230.929 98.7617 -4.33034
58.9233 -230.929 95.9375 -4.33034
59.0873 -230.929 87.8258 -4.33034
59.2514 -230.929 75.7656 -4.33034
59.4154 -230.929 120.434 -4.33034
59.5795 -230.929 91.9063 -4.33034
59.7435 -230.929 108.117 -4.33034
59.9075 -230.929 83.3594 -4.33034
60.0716 -230.929 95.3359 -4.33034
60.2356 -230.929 80.1484 -4.33034
60.3997 -230.929 49.2109 -4.33034
60.5637 -230.929 76.8125 -4.33034
60.7277 -230.929 67.4727 -4.33034
60.8918 -230.929 63.5723 -4.33034
61.0558 -230.929 110.57 -4.33034
61.2199 -230.929 117.016 -4.33034
61.3839 -230.929 99.4805 -4.33034
61.5479 -230.929 81.6211 -4.33034
61.712 -230.929 111.664 -4.33034
61.876 -230.929 110.742 -4.33034
62.0401 -230.929 107.77 -4.33034
62.2041 -230.815 93.7539 -4.33247
62.3681 -195.347 68.8945 -5.11909
62.5322 -191.621 120.355 -5.21863
62.6962 -230.929 99.2422 -4.33034
62.8603 -230.872 81.3164 -4.3314
63.0243 -183.665 78.4609 -5.44468
63.1883 -144.129 86.9453 -6.93822
63.3524 -24.2454 110.719 -41.2449
63.5164 255.402 117.324 3.9154
63.6805 211.07 92.4961 4.73776
63.8445 126.341 91.4336 7.91508
64.0085 72.9455 51.6797 13.7089
64.1726 40.7838 122.219 24.5195
64.3366 27.0231 124.035 37.0053
64.5007 18.0909 136.477 55.2764
64.6647 12.8012 110.066 78.1176
64.8288 10.2317 101.801 97.7358
64.9928 8.30216 77.2656 120.451
65.1568 7.50212 98.9531 133.296
65.3209 6.85267 98.2031 145.928
65.4849 6.63619 57.1309 150.689
65.649 6.28794 50.8945 159.035
65.813 6.1091 115.164 163.69
65.977 6.01498 135.922 166.252
66.1411 6.05263 140.281 165.217
66.3051 6.04322 176.586 165.475
66.4692 6.00557 167.5 166.512
66.6332 6.08087 129.031 164.45
66.7972 6.26911 147.398 159.512
66.9613 6.09969 174.836 163.943
67.1253 6.04322 135.844 165.475
67.2894 6.2597 121.75 159.752
67.4534 6.08087 147.844 164.45
67.6174 5.9491 121.934 168.093
67.7815 5.95851 124.93 167.827
67.9455 5.7232 157.828 174.727
68.1096 5.50672 136.844 181.596
68.2736 6.04322 143.836 165.475
68.4376 5.84556 152.531 171.07
68.6017 5.89262 155.094 169.704
68.7657 5.44083 136.875 183.795
68.9298 6.23146 162.477 160.476
69.0938 5.89262 135.477 169.704
69.2578 5.62908 101.891 177.649
69.4219 5.58202 141.203 179.147
69.5859 5.67614 116.152 176.176
69.75 5.69496 116.391 175.594
69.914 5.76085 173.789 173.585
70.078 5.50672 90.1992 181.596
70.2421 5.61025 153 178.245
70.4061 5.67614 161.539 176.176
70.5702 5.46907 125.836 182.846
70.7342 5.69496 105.211 175.594
70.8982 5.54437 137.68 180.363
71.0623 5.69496 126.969 175.594
71.2263 5.65732 160.313 176.762
71.3904 5.75144 119.449 173.87
71.5544 5.61025 113.285 178.245
71.7184 5.76085 135.555 173.585
71.8825 5.69496 138.523 175.594
72.0465 5.7232 155.375 174.727
72.2106 5.58202 136.906 179.147
72.3746 5.29965 129.484 188.692
72.5386 5.27141 146.969 189.702
72.7027 5.27141 148.977 189.702
72.8667 5.20553 140.891 192.103
73.0308 5.38436 131.703 185.723
73.1948 5.50672 152.484 181.596
73.3588 5.13023 143.68 194.923
73.5229 5.25259 143.461 190.382
73.6869 5.22435 150.055 191.411
73.851 5.20553 142.875 192.103
74.015 5.29024 136.555 189.027
74.1791 5.57261 123.258 179.449
74.3431 5.4879 170.188 182.219
74.5071 5.22435 121.246 191.411
74.6712 5.37495 182.125 186.048
```

Appendix C

Groundwater Analytical Results

GROUNDWATER ANALYTICAL RESULTS

During drilling operations at R-26, alluvial groundwater was not encountered. Perched groundwater was encountered in the R-26 corehole at depths of 173 and 241 ft bgs. An upper saturated zone was encountered in the R-26 borehole at 604 ft bgs. A screening groundwater sample was collected from the open corehole at 240 ft on September 15, 2003. This groundwater may have flowed down from the 173-ft zone above. The groundwater sample from the R-26 corehole was collected using a bailer and analyzed for inorganic constituents and high explosive compounds. Analytical results for the corehole sample are provided in Table 1. Two piezometers were installed at depths of 150 to 180 ft bgs and 230 to 250 ft bgs for collecting additional groundwater samples. To date, no samples have been collected from the piezometers. A groundwater sample was not collected from the 604-ft zone during drilling of the borehole; however, this zone was sampled during well development between depths of 651.8 and 669.9 ft bgs (upper screened interval). A groundwater sample was collected from the regional aquifer between 1421.8 and 1445 ft bgs (lower screened interval) on November 14, 2003. These groundwater samples were analyzed for cations, anions, metals, and low-level tritium, and the results are presented in Tables 2 and 3.

Core samples were collected from the alluvium and Tshirege Member of the Bandelier Tuff. Thirteen samples of core were collected from the vadose (unsaturated) zone during drilling from 5 to 250 ft bgs. Approximately 500 g to 1000 g of core or cuttings samples were placed in appropriate sample jars in protective plastic bags before they were analyzed by EES-6, Coastal Science Laboratories, and Severn–Trent Laboratories (STL), Inc. These samples were analyzed for high explosive compounds, cations, anions, metals, and radionuclides for characterization purposes. The results will be reported in the investigation report for the Cañon de Valle watershed.

GEOCHEMISTRY OF SAMPLED WATERS FROM WELL R-26

Groundwater samples were collected after well development from both the upper saturated zone within the Cerro Toledo interval (651.8 to 669.9 ft bgs) and the regional aquifer (1421.8 to 1445 ft bgs) within the upper Puye Formation. Groundwater samples from the upper saturated zone and the regional aquifer were collected by using a submersible pump during well development. Analytical results for these two samples are provided in Tables 2 and 3. Temperature, turbidity, and pH were not determined onsite during sampling of the upper saturated zone and regional aquifer. Both filtered (metals, trace elements, and major cations and anions) and nonfiltered (tritium, total organic carbon, radionuclides, and stable isotopes) samples were collected for chemical and radiochemical analyses. Aliquots of the samples were filtered through a 0.45-μm Gelman filter. Groundwater samples were acidified with analytical-grade HNO_3 to a pH of 2.0 or less for metal and major cation analyses at EES-6. Alkalinity was determined at EES-6 using standard titration techniques.

Groundwater samples were analyzed by EES-6 using techniques specified in the US Environmental Protection Agency (EPA) SW-846 manual. Ion chromatography (IC) was the analytical method for bromide, chloride, fluoride, nitrate, nitrite, oxalate, perchlorate, phosphate, and sulfate. The method detection limit (MDL) for perchlorate using IC is 0.002 ppm or mg/L (2 ppb or 2 μg/L). Perchlorate was also analyzed by General Engineering Laboratories (GEL) using the liquid chromatography/mass spectrometry/mass spectrometry (LC/MS/MS) method. This

method is more sensitive than the IC method, having an MDL of 0.00005 mg/L (0.050 µg/L) and a reporting limit or quantitation limit of 0.0002 mg/L (0.2 µg/L). Inductively coupled (argon) plasma emission spectroscopy (ICPES) was used for calcium, magnesium, potassium, silica, and sodium. Aluminum, antimony, arsenic, barium, beryllium, cadmium, chromium, cobalt, copper, iron, lead, manganese, mercury, nickel, selenium, silver, thallium, vanadium, uranium, and zinc were analyzed by inductively coupled (argon) plasma mass spectrometry (ICPMS). The precision limits (analytical error) for major ions and trace elements were generally less than ±10% using ICPES and ICPMS. High explosive compounds were analyzed by using the LC/MS/MS method.

Radionuclide activity in groundwater was determined by alpha spectrometry for americium, plutonium, and uranium isotopes; gas proportional counting for strontium-90; and gamma spectrometry for cesium-137 and other gamma-emitting isotopes. GEL performed the above radiometric analyses. Concentrations of tritium were determined by electrolytic enrichment at the University of Miami. Stable isotopes of oxygen (oxygen-18 and oxygen-16, δ18O) and hydrogen (hydrogen and deuterium, δD) were analyzed by Geochron Laboratories (Cambridge, Massachusetts) using isotope ratio mass spectrometry (IRMS). Stable isotopes of nitrogen (nitrogen-15 and nitrogen-14, δ15N) were analyzed by Coastal Science Laboratories, Inc. (Austin, Texas) using IRMS. Analytical results for nitrogen stable isotopes are pending for R-26.

Table 1

Hydrochemistry of Perched Groundwater from Open Corehole R-26 (filtered samples except as noted)

Depth (ft)	**240**
Geologic Unit	**Cerro Toledo Interval**
Date Sampled	**09/15/03**
pH	7.73 (Lab)
Temperature (°C)	Not reported
Specific Conductance (µS/cm)	Not reported
Turbidity (NTU)	Not reported
Alkalinity (ppm $CaCO_3$/L)	83.8
Al (ppm)	0.035
Sb (ppm)	0.001
As (ppm)	0.0009
B (ppm)	0.018
Ba (ppm)	0.007
Be (ppm)	[0.001], U
HCO_3 (ppm)	90.0
Br (ppm)	0.05
Cd (ppm)	[0.001], U
Ca (ppm)	9.77
Cl (ppm)	5.27
ClO_4 (mg/L) (LC/MS/MS)	Not analyzed
ClO_4 (ppm) (IC)	Not decipherable

Cr (ppm)	0.0010
Co (ppm)	0.0059
Cu (ppm)	0.0081
F (ppm)	0.16
Fe (ppm)	[0.01], U
Pb (ppm)	0.0003
Mg (ppm)	2.86
Mn (ppm)	0.062
Hg (ppm)	0.010
Mo (ppm)	0.061
Ni (ppm)	[0.001], U
NO_3 (ppm) (as N)	0.60
NO_2 (ppm) (as N)	0.01
C_2O_4 (ppm) (oxalate)	0.05
PO_4 (ppm) (as P)	0.18
K (ppm)	9.09
Se (ppm)	[0.001], U
Ag (ppm)	[0.001], U
Na (ppm)	23.1
SiO_2 (ppm)	32.7
Sr (ppm)	0.043
SO_4 (ppm)	2.46
Tl (ppm)	[0.001], U
U (ppm)	0.0022
V (ppm)	0.001
Zn (ppm)	0.003
TOC (ppm), non filtered	Not analyzed
RDX (µg/L), non filtered	0.019
HMX (µg/L), non filtered	0.0634
TDS (ppm) (calculated)	185

Note: U = not detected. Silica concentrations were calculated from measured silicon (ICPES). Bicarbonate concentrations were calculated from measured alkalinity. TOC = total organic carbon.

Table 2

Hydrochemistry of the Upper Saturated Zone and Regional Aquifer in Completed Well R-26 (samples filtered, except as noted)

Depth (ft)	**651.8 to 669.9**	**1421.8 to 1445**
Geologic Unit	**Cerro Toledo Interval**	**Upper Puye Formation**
Date Sampled	**11/16/03**	**11/14/03**
pH	6.99 (Lab)	7.07 (Lab)
Temperature (°C)	Not reported	Not reported
Specific Conductance (µS/cm)	Not reported	Not reported

Turbidity (NTU)	Not reported	Not reported
Alkalinity (ppm $CaCO_3$/L)	46.1	46.3
Al (ppm)	0.85	0.90
Sb (ppm)	[0.001], U	[0.001], U
As (ppm)	0.0009	0.0008
B (ppm)	0.008	0.009
Ba (ppm)	0.010	0.010
Be (ppm)	[0.001], U	[0.001], U
HCO_3 (ppm)	56.3	56.5
Br (ppm)	0.02	0.02
Cd (ppm)	[0.001], U	[0.001], U
Ca (ppm)	7.53	7.51
Cl (ppm)	1.12	1.13
ClO_4 (mg/L) (LC/MS/MS)	0.000215	0.000218
ClO_4 (ppm) (IC)	[0.002], U	[0.002], U
Cr (ppm)	0.0013	0.0015
Co (ppm)	[0.001], U	[0.001], U
Cu (ppm)	[0.001], U	[0.001], U
F (ppm)	0.08	0.08
Fe (ppm)	0.14	0.21
Pb (ppm)	0.0004	0.0006
Mg (ppm)	2.93	2.90
Mn (ppm)	0.0040	0.0062
Hg (ppm)	[0.00005], U	[0.00005], U
Mo (ppm)	[0.001], U	[0.001], U
Ni (ppm)	[0.001], U	[0.001], U
NO_3 (ppm) (as N)	0.38	0.37
NO_2 (ppm) (as N)	[0.01], U	[0.01], U
C_2O_4 (ppm) (oxalate)	[0.01], U	[0.01], U
PO_4 (ppm) (as P)	0.08	0.06
K (ppm)	2.11	2.11
Se (ppm)	[0.001], U	[0.001], U
Ag (ppm)	[0.001], U	[0.001], U
Na (ppm)	9.35	9.27
SiO_2 (ppm)	66.8	67.8
Sr (ppm)	0.042	0.043
SO_4 (ppm)	1.09	1.13
Tl (ppm)	[0.001], U	[0.001], U
U (ppm)	0.0005	0.0005
V (ppm)	0.007	0.007
Zn (ppm)	0.041	0.17
TDS (ppm) (calculated)	152	154

Note: U = not detected. Silica concentrations were calculated from measured silicon (ICPES). Bicarbonate concentrations were calculated from measured alkalinity.

Table 3
Hydrochemistry of the Upper Saturated Zone and Regional Aquifer in Completed Well R-26 (non-filtered samples)

Depth (ft)	**651.8 to 669.9**	**1421.8 to 1445.0**
Geologic Unit	**Cerro Toledo Interval**	**Upper Puye Formation**
Date Sampled	**11/16/03**	**11/14/03**
Tritium (pCi/L)	[0.10], U	[0.19], U
Am-241 (pCi/L)	[0.0054], U	[0.0163], U
Cs-137 (pCi/L)	[-1.51], U	[0.383], U
Pu-238 (pCi/L)	[0.0148], U	[-0.0050], U
Pu-239,240 (pCi/L)	[0.0049], U	[0.0050], U
Sr-90 (pCi/L)	[0.0276], U	[-0.0694], U
U-234 (pCi/L)	0.371	0.351
U-235 (pCi/L)	[0.0327], U	[0.0312], U
U-238 (pCi/L)	0.185	0.229
RDX (mg/L)	[0.000104], U	[0.000104], U
HMX (mg/L)	[0.000104], U	[0.000104], U
TOC (ppm)	2.01	2.17
$\delta^{15}N$ (‰)	Results pending	Results pending
δD (‰)	-88	-87
$\delta^{18}O$ (‰)	-12.0	-12.0

Note: U = not detected, ‰ = permil, and TOC = total organic carbon.

Hall Environmental Analysis Laboratory

Date: *12-Dec-03*

CLIENT: Kleinfelder
Client Sample ID: R-26 cuttings
Lab Order: 0311068
Collection Date: 11/10/2003 12:50:00 PM
Project: R-26
Lab ID: 0311068-03
Matrix: SOIL

Analyses	Result	Limit	Qual	Units	DF	Date Analyzed
EPA METHOD 8082: PCB'S						Analyst: **JMP**
Aroclor 1016	ND	0.050		mg/Kg	1	12/4/2003 5:05:43 PM
Aroclor 1221	ND	0.25		mg/Kg	1	12/4/2003 5:05:43 PM
Aroclor 1232	ND	0.050		mg/Kg	1	12/4/2003 5:05:43 PM
Aroclor 1242	ND	0.050		mg/Kg	1	12/4/2003 5:05:43 PM
Aroclor 1248	ND	0.050		mg/Kg	1	12/4/2003 5:05:43 PM
Aroclor 1254	ND	0.050		mg/Kg	1	12/4/2003 5:05:43 PM
Aroclor 1260	ND	0.050		mg/Kg	1	12/4/2003 5:05:43 PM
Surr: Decachlorobiphenyl	87.4	50.1-115		%REC	1	12/4/2003 5:05:43 PM
EPA METHOD 8260B: VOLATILES						Analyst: **BL**
Benzene	ND	0.050		mg/Kg	1	11/13/2003
Toluene	ND	0.050		mg/Kg	1	11/13/2003
Ethylbenzene	ND	0.050		mg/Kg	1	11/13/2003
Methyl tert-butyl ether (MTBE)	ND	0.050		mg/Kg	1	11/13/2003
1,2,4-Trimethylbenzene	ND	0.050		mg/Kg	1	11/13/2003
1,3,5-Trimethylbenzene	ND	0.050		mg/Kg	1	11/13/2003
1,2-Dichloroethane (EDC)	ND	0.050		mg/Kg	1	11/13/2003
1,2-Dibromoethane (EDB)	ND	0.050		mg/Kg	1	11/13/2003
Naphthalene	ND	0.10		mg/Kg	1	11/13/2003
1-Methylnaphthalene	ND	0.20		mg/Kg	1	11/13/2003
2-Methylnaphthalene	ND	0.20		mg/Kg	1	11/13/2003
Acetone	ND	0.50		mg/Kg	1	11/13/2003
Bromobenzene	ND	0.050		mg/Kg	1	11/13/2003
Bromochloromethane	ND	0.050		mg/Kg	1	11/13/2003
Bromodichloromethane	ND	0.050		mg/Kg	1	11/13/2003
Bromoform	ND	0.050		mg/Kg	1	11/13/2003
Bromomethane	ND	0.10		mg/Kg	1	11/13/2003
2-Butanone	ND	0.50		mg/Kg	1	11/13/2003
Carbon disulfide	ND	0.50		mg/Kg	1	11/13/2003
Carbon tetrachloride	ND	0.050		mg/Kg	1	11/13/2003
Chlorobenzene	ND	0.050		mg/Kg	1	11/13/2003
Chloroethane	ND	0.10		mg/Kg	1	11/13/2003
Chloroform	ND	0.050		mg/Kg	1	11/13/2003
Chloromethane	ND	0.050		mg/Kg	1	11/13/2003
2-Chlorotoluene	ND	0.050		mg/Kg	1	11/13/2003
4-Chlorotoluene	ND	0.050		mg/Kg	1	11/13/2003
cis-1,2-DCE	ND	0.050		mg/Kg	1	11/13/2003
cis-1,3-Dichloropropene	ND	0.050		mg/Kg	1	11/13/2003
1,2-Dibromo-3-chloropropane	ND	0.10		mg/Kg	1	11/13/2003
Dibromochloromethane	ND	0.050		mg/Kg	1	11/13/2003
Dibromomethane	ND	0.10		mg/Kg	1	11/13/2003

Qualifiers:
ND - Not Detected at the Reporting Limit
J - Analyte detected below quantitation limit
B - Analyte detected in the associated Method Blank
* - Value exceeds Maximum Contaminant Level
S - Spike Recovery outside accepted recovery limits
R - RPD outside accepted recovery limits
E - Value above quantitation range

Hall Environmental Analysis Laboratory

Date: *12-Dec-03*

CLIENT: Kleinfelder
Client Sample ID: R-26 cuttings
Lab Order: 0311068
Collection Date: 11/10/2003 12:50:00 PM
Project: R-26
Lab ID: 0311068-03
Matrix: SOIL

Analyses	Result	Limit	Qual	Units	DF	Date Analyzed
1,2-Dichlorobenzene	ND	0.050		mg/Kg	1	11/13/2003
1,3-Dichlorobenzene	ND	0.050		mg/Kg	1	11/13/2003
1,4-Dichlorobenzene	ND	0.050		mg/Kg	1	11/13/2003
Dichlorodifluoromethane	ND	0.050		mg/Kg	1	11/13/2003
1,1-Dichloroethane	ND	0.050		mg/Kg	1	11/13/2003
1,1-Dichloroethene	ND	0.050		mg/Kg	1	11/13/2003
1,2-Dichloropropane	ND	0.050		mg/Kg	1	11/13/2003
1,3-Dichloropropane	ND	0.050		mg/Kg	1	11/13/2003
2,2-Dichloropropane	ND	0.050		mg/Kg	1	11/13/2003
1,1-Dichloropropene	ND	0.050		mg/Kg	1	11/13/2003
Hexachlorobutadiene	ND	0.050		mg/Kg	1	11/13/2003
2-Hexanone	ND	0.50		mg/Kg	1	11/13/2003
Isopropylbenzene	ND	0.050		mg/Kg	1	11/13/2003
4-Isopropyltoluene	ND	0.050		mg/Kg	1	11/13/2003
4-Methyl-2-pentanone	ND	0.50		mg/Kg	1	11/13/2003
Methylene chloride	ND	0.15		mg/Kg	1	11/13/2003
n-Butylbenzene	ND	0.050		mg/Kg	1	11/13/2003
n-Propylbenzene	ND	0.050		mg/Kg	1	11/13/2003
sec-Butylbenzene	ND	0.050		mg/Kg	1	11/13/2003
Styrene	ND	0.050		mg/Kg	1	11/13/2003
tert-Butylbenzene	ND	0.050		mg/Kg	1	11/13/2003
1,1,1,2-Tetrachloroethane	ND	0.050		mg/Kg	1	11/13/2003
1,1,2,2-Tetrachloroethane	ND	0.050		mg/Kg	1	11/13/2003
Tetrachloroethene (PCE)	ND	0.050		mg/Kg	1	11/13/2003
trans-1,2-DCE	ND	0.050		mg/Kg	1	11/13/2003
trans-1,3-Dichloropropene	ND	0.050		mg/Kg	1	11/13/2003
1,2,3-Trichlorobenzene	ND	0.050		mg/Kg	1	11/13/2003
1,2,4-Trichlorobenzene	ND	0.050		mg/Kg	1	11/13/2003
1,1,1-Trichloroethane	ND	0.050		mg/Kg	1	11/13/2003
1,1,2-Trichloroethane	ND	0.050		mg/Kg	1	11/13/2003
Trichloroethene (TCE)	ND	0.050		mg/Kg	1	11/13/2003
Trichlorofluoromethane	ND	0.050		mg/Kg	1	11/13/2003
1,2,3-Trichloropropane	ND	0.10		mg/Kg	1	11/13/2003
Vinyl chloride	ND	0.10		mg/Kg	1	11/13/2003
Xylenes, Total	ND	0.050		mg/Kg	1	11/13/2003
Surr: 1,2-Dichloroethane-d4	111	68.4-123		%REC	1	11/13/2003
Surr: 4-Bromofluorobenzene	93.8	70-119		%REC	1	11/13/2003
Surr: Dibromofluoromethane	98.3	76.8-123		%REC	1	11/13/2003
Surr: Toluene-d8	111	85.2-123		%REC	1	11/13/2003
EPA METHOD 8270D: SEMIVOLATILES						Analyst: **CS**
Acenaphthene	ND	0.20		mg/Kg	1	11/21/2003
Acenaphthylene	ND	0.20		mg/Kg	1	11/21/2003

Qualifiers:
ND - Not Detected at the Reporting Limit
J - Analyte detected below quantitation limits
B - Analyte detected in the associated Method Blank
* - Value exceeds Maximum Contaminant Level
S - Spike Recovery outside accepted recovery limits
R - RPD outside accepted recovery limits
E - Value above quantitation range

Hall Environmental Analysis Laboratory

Date: *12-Dec-03*

CLIENT: Kleinfelder
Client Sample ID: R-26 cuttings
Lab Order: 0311068
Collection Date: 11/10/2003 12:50:00 PM
Project: R-26
Lab ID: 0311068-03
Matrix: SOIL

Analyses	Result	Limit	Qual	Units	DF	Date Analyzed
Aniline	ND	0.20		mg/Kg	1	11/21/2003
Anthracene	ND	0.20		mg/Kg	1	11/21/2003
Azobenzene	ND	0.20		mg/Kg	1	11/21/2003
Benz(a)anthracene	ND	0.20		mg/Kg	1	11/21/2003
Benzidine	ND	0.20		mg/Kg	1	11/21/2003
Benzo(a)pyrene	ND	0.20		mg/Kg	1	11/21/2003
Benzo(b)fluoranthene	ND	0.20		mg/Kg	1	11/21/2003
Benzo(g,h,i)perylene	ND	0.20		mg/Kg	1	11/21/2003
Benzo(k)fluoranthene	ND	0.20		mg/Kg	1	11/21/2003
Benzoic acid	ND	0.50		mg/Kg	1	11/21/2003
Benzyl alcohol	ND	0.20		mg/Kg	1	11/21/2003
Bis(2-chloroethoxy)methane	ND	0.20		mg/Kg	1	11/21/2003
Bis(2-chloroethyl)ether	ND	0.20		mg/Kg	1	11/21/2003
Bis(2-chloroisopropyl)ether	ND	0.20		mg/Kg	1	11/21/2003
Bis(2-ethylhexyl)phthalate	ND	0.20		mg/Kg	1	11/21/2003
4-Bromophenyl phenyl ether	ND	0.20		mg/Kg	1	11/21/2003
Butyl benzyl phthalate	ND	0.20		mg/Kg	1	11/21/2003
Carbazole	ND	0.20		mg/Kg	1	11/21/2003
4-Chloro-3-methylphenol	ND	0.20		mg/Kg	1	11/21/2003
4-Chloroaniline	ND	0.20		mg/Kg	1	11/21/2003
2-Chloronaphthalene	ND	0.20		mg/Kg	1	11/21/2003
2-Chlorophenol	ND	0.20		mg/Kg	1	11/21/2003
4-Chlorophenyl phenyl ether	ND	0.20		mg/Kg	1	11/21/2003
Chrysene	ND	0.20		mg/Kg	1	11/21/2003
Di-n-butyl phthalate	0.25	0.20	B	mg/Kg	1	11/21/2003
Di-n-octyl phthalate	ND	0.20		mg/Kg	1	11/21/2003
Dibenz(a,h)anthracene	ND	0.20		mg/Kg	1	11/21/2003
Dibenzofuran	ND	0.20		mg/Kg	1	11/21/2003
1,2-Dichlorobenzene	ND	0.20		mg/Kg	1	11/21/2003
1,3-Dichlorobenzene	ND	0.20		mg/Kg	1	11/21/2003
1,4-Dichlorobenzene	ND	0.20		mg/Kg	1	11/21/2003
3,3'-Dichlorobenzidine	ND	0.20		mg/Kg	1	11/21/2003
Diethyl phthalate	ND	0.20		mg/Kg	1	11/21/2003
Dimethyl phthalate	ND	0.20		mg/Kg	1	11/21/2003
2,4-Dichlorophenol	ND	0.20		mg/Kg	1	11/21/2003
2,4-Dimethylphenol	ND	0.20		mg/Kg	1	11/21/2003
4,6-Dinitro-2-methylphenol	ND	0.50		mg/Kg	1	11/21/2003
2,4-Dinitrophenol	ND	0.50		mg/Kg	1	11/21/2003
2,4-Dinitrotoluene	ND	0.20		mg/Kg	1	11/21/2003
2,6-Dinitrotoluene	ND	0.20		mg/Kg	1	11/21/2003
Fluoranthene	ND	0.20		mg/Kg	1	11/21/2003
Fluorene	ND	0.20		mg/Kg	1	11/21/2003

Qualifiers:

ND - Not Detected at the Reporting Limit
J - Analyte detected below quantitation limit
B - Analyte detected in the associated Method Blank
* - Value exceeds Maximum Contaminant Level
S - Spike Recovery outside accepted recovery limits
R - RPD outside accepted recovery limits
E - Value above quantitation range

Hall Environmental Analysis Laboratory

Date: *12-Dec-03*

CLIENT: Kleinfelder
Lab Order: 0311068
Project: R-26
Lab ID: 0311068-03

Client Sample ID: R-26 cuttings
Collection Date: 11/10/2003 12:50:00 PM
Matrix: SOIL

Analyses	Result	Limit	Qual	Units	DF	Date Analyzed
Hexachlorobenzene	ND	0.20		mg/Kg	1	11/21/2003
Hexachlorobutadiene	ND	0.20		mg/Kg	1	11/21/2003
Hexachlorocyclopentadiene	ND	0.20		mg/Kg	1	11/21/2003
Hexachloroethane	ND	0.20		mg/Kg	1	11/21/2003
Indeno(1,2,3-cd)pyrene	ND	0.20		mg/Kg	1	11/21/2003
Isophorone	ND	0.20		mg/Kg	1	11/21/2003
2-Methylnaphthalene	ND	0.20		mg/Kg	1	11/21/2003
2-Methylphenol	ND	0.20		mg/Kg	1	11/21/2003
3+4-Methylphenol	ND	0.20		mg/Kg	1	11/21/2003
N-Nitrosodi-n-propylamine	ND	0.20		mg/Kg	1	11/21/2003
N-Nitrosodiphenylamine	ND	0.20		mg/Kg	1	11/21/2003
Naphthalene	ND	0.20		mg/Kg	1	11/21/2003
2-Nitroaniline	ND	0.50		mg/Kg	1	11/21/2003
3-Nitroaniline	ND	0.50		mg/Kg	1	11/21/2003
4-Nitroaniline	ND	0.20		mg/Kg	1	11/21/2003
Nitrobenzene	ND	0.20		mg/Kg	1	11/21/2003
2-Nitrophenol	ND	0.20		mg/Kg	1	11/21/2003
4-Nitrophenol	ND	0.20		mg/Kg	1	11/21/2003
Pentachlorophenol	ND	0.50		mg/Kg	1	11/21/2003
Phenanthrene	ND	0.20		mg/Kg	1	11/21/2003
Phenol	ND	0.20		mg/Kg	1	11/21/2003
Pyrene	ND	0.20		mg/Kg	1	11/21/2003
Pyridine	ND	0.50		mg/Kg	1	11/21/2003
1,2,4-Trichlorobenzene	ND	0.20		mg/Kg	1	11/21/2003
2,4,5-Trichlorophenol	ND	0.20		mg/Kg	1	11/21/2003
2,4,6-Trichlorophenol	ND	0.20		mg/Kg	1	11/21/2003
Surr: 2,4,6-Tribromophenol	75.9	26-156		%REC	1	11/21/2003
Surr: 2-Fluorobiphenyl	82.5	23.6-111		%REC	1	11/21/2003
Surr: 2-Fluorophenol	67.4	21.5-107		%REC	1	11/21/2003
Surr: 4-Terphenyl-d14	98.3	30-220		%REC	1	11/21/2003
Surr: Nitrobenzene-d5	70.3	25.3-115		%REC	1	11/21/2003
Surr: Phenol-d6	79.0	25.2-115		%REC	1	11/21/2003
MERCURY, TCLP LEACHED						Analyst: **MAP**
Mercury	ND	0.020		mg/L	1	11/21/2003
EPA METHOD 6010C: TCLP METALS						Analyst: **NMO**
Arsenic	ND	5.0		mg/L	1	11/21/2003 11:14:44 AM
Barium	ND	100		mg/L	1	11/21/2003 11:14:44 AM
Cadmium	ND	1.0		mg/L	1	11/21/2003 11:14:44 AM
Chromium	ND	5.0		mg/L	1	11/21/2003 11:14:44 AM
Lead	ND	5.0		mg/L	1	11/21/2003 11:14:44 AM
Selenium	ND	1.0		mg/L	1	11/21/2003 11:14:44 AM

Qualifiers:

ND - Not Detected at the Reporting Limit
J - Analyte detected below quantitation limit
B - Analyte detected in the associated Method Blank
* - Value exceeds Maximum Contaminant Level
S - Spike Recovery outside accepted recovery limits
R - RPD outside accepted recovery limits
E - Value above quantitation range

Hall Environmental Analysis Laboratory

Date: *12-Dec-03*

CLIENT: Kleinfelder
Lab Order: 0311068
Project: R-26
Lab ID: 0311068-03

Client Sample ID: R-26 cuttings
Collection Date: 11/10/2003 12:50:00 PM
Matrix: SOIL

Analyses	Result	Limit	Qual	Units	DF	Date Analyzed
Silver	ND	5.0		mg/L	1	11/21/2003 11:14:44 AM

Qualifiers:

ND - Not Detected at the Reporting Limit
J - Analyte detected below quantitation limit
B - Analyte detected in the associated Method Blank
* - Value exceeds Maximum Contaminant Level
S - Spike Recovery outside accepted recovery limits
R - RPD outside accepted recovery limits
E - Value above quantitation range

GENERAL ENGINEERING LABORATORIES, LLC
2040 Savage Road Charleston SC 29407 - (843) 556-8171 - www.gel.com

Certificate of Analysis

Company : Hall Environmental Analysis Labs
Address : 4901 Hawkins Ne
Suite D
Albuquerque, New Mexico 87109
Contact: Nancy McDuffie
Project: Hall Environmental

Report Date: December 11, 2003

Client Sample ID: R-26 Cuttings (chemistry)
Sample ID: 102538001
Matrix: Soil
Collect Date: 10-NOV-03 12:50
Receive Date: 24-NOV-03
Collector: Client
Moisture: 3.46%

Project: HALL00103
Client ID: HALL001

Parameter	Qualifier	Result	DL	RL	Units	DF	AnalystDate	Time	Batch	Method
HPLC Explosives										
8330 EXPLO. Std list Soil										
1,3,5-Trinitrobenzene	Uh	ND	29.0	80.0	ug/kg	1	MAP 12/02/03	1937	293844	1
2,4,6-Trinitrotoluene	Uh	ND	48.0	80.0	ug/kg	1				
2,4-Dinitrotoluene	Uh	ND	55.0	80.0	ug/kg	1				
2,6-Dinitrotoluene	Uh	ND	48.0	80.0	ug/kg	1				
2-Amino-4,6-dinitrotoluene	Uh	ND	18.1	80.0	ug/kg	1				
4-Amino-2,6-dinitrotoluene	Uh	ND	34.1	80.0	ug/kg	1				
HMX	Uh	ND	48.0	80.0	ug/kg	1				
Nitrobenzene	Uh	ND	48.0	80.0	ug/kg	1				
RDX	Uh	ND	48.0	80.0	ug/kg	1				
Tetryl	Uh	ND	22.1	80.0	ug/kg	1				
m-Dinitrobenzene	Uh	ND	34.1	80.0	ug/kg	1				
m-Nitrotoluene	Uh	ND	24.0	80.0	ug/kg	1				
o-Nitrotoluene	Uh	ND	24.0	80.0	ug/kg	1				
p-Nitrotoluene	Uh	ND	24.0	80.0	ug/kg	1				
Mercury Analysis-CVAA										
7471 Cold Vapor Hg in Solid										
Mercury	J	9.75	0.992	10.1	ug/kg	1	NOR1 12/01/03	1118	293699	2
Metals Analysis-ICP										
6010/3050 ICP SCAN Metals Soil										
Aluminum		5930000	822	10400	ug/kg	2	RMJ 12/03/03	2104	293758	3
Antimony	U	ND	356	1040	ug/kg	2				
Arsenic		2640	214	518	ug/kg	2				
Barium		70500	69.1	518	ug/kg	2				
Beryllium	J	460	51.8	518	ug/kg	2				
Cadmium	U	ND	49.5	518	ug/kg	2				
Calcium		2700000	1350	10400	ug/kg	2				
Chromium		5660	167	518	ug/kg	2				
Cobalt		2370	82.7	518	ug/kg	2				
Copper		7720	210	518	ug/kg	2				
Iron		7650000	1620	10400	ug/kg	2				
Lead		38000	294	518	ug/kg	2				
Magnesium		776000	606	10400	ug/kg	2				
Manganese		295000	135	1040	ug/kg	2				
Nickel		5490	88.5	518	ug/kg	2				
Potassium		515000	3700	10400	ug/kg	2				
Selenium	J	471	168	518	ug/kg	2				

GENERAL ENGINEERING LABORATORIES, LLC
2040 Savage Road Charleston SC 29407 - (843) 556-8171 - www.gel.com

Certificate of Analysis

Company : Hall Environmental Analysis Labs
Address : 4901 Hawkins Ne
Suite D
Albuquerque, New Mexico 87109
Contact: Nancy McDuffie
Project: Hall Environmental

Report Date: December 11, 2003

Client Sample ID: R-26 Cuttings (chemistry) Project: HALL00103
Sample ID: 102538001 Client ID: HALL001

Parameter	Qualifier	Result	DL	RL	Units	DF	AnalystDate	Time	Batch	Method
Metals Analysis-ICP										
6010/3050 ICP SCAN Metals Soil										
Silver	U	ND	93.4	518	ug/kg	2				
Sodium		441000	3760	10400	ug/kg	2				
Thallium	U	ND	1040	2070	ug/kg	2				
Vanadium		9820	94.1	518	ug/kg	2				
Zinc		27100	174	518	ug/kg	2				

The following Prep Methods were performed

Method	Description	Analyst	Date	Time	Prep Batch
SW846 3050B	846 3050BS PREP	CQH1	12/02/03	1623	293757
SW846 7471A Prep	EPA 7471A Mercury Prep Soil	ETL	11/26/03	1115	293697
SW846 8330 PREP	8330 EXPLOSIVES BY HPLC Prep in soil	HMF1	12/01/03	1200	293843

The following Analytical Methods were performed

Method	Description	Analyst Comments
1	SW846 8330	
2	SW846 7471A	
3	SW846 3050B/6010B	

Surrogate/Tracer recovery	Test	Recovery%	Acceptable Limits
1,2-dinitrobenzene	8330 EXPLO. Std list Soil	83	(76%-114%)

Notes:
The Qualifiers in this report are defined as follows :

< Result is less than amount reported.
> Result is greater than amount reported.
B Target analyte was detected in the sample as well as the associated blank.
BD Flag for results below the MDC or a flag for low tracer recovery.
E Concentration of the target analyte exceeds the instrument calibration range.
H Analytical holding time exceeded.
J Indicates an estimated value. The result was greater than the detection limit, but less than the reporting limit.
P The response between the confirmation column and the primary column is >40%D.
U Indicates the target analyte was analyzed for but not detected above the detection limit.
UI Uncertain identification for gamma spectroscopy.
X Lab-specific qualifier-please see case narrative, data summary package or contact your project manager for details.
Y QC Samples were not spiked with this compound.
h Sample preparation or preservation holding time exceeded.

The above sample is reported on a dry weight basis except where prohibited by the analytical procedure.

GENERAL ENGINEERING LABORATORIES, LLC
2040 Savage Road Charleston SC 29407 - (843) 556-8171 - www.gel.com

Certificate of Analysis

Company : Hall Environmental Analysis Labs
Address : 4901 Hawkins Ne
Suite D
Albuquerque, New Mexico 87109
Contact: Nancy McDuffie
Project: Hall Environmental

Report Date: December 11, 2003

Client Sample ID: R-26 Cuttings (chemistry) Project: HALL00103
Sample ID: 102538001 Client ID: HALL001

Parameter	Qualifier	Result	DL	RL	Units	DF	AnalystDate	Time	Batch	Method

Where the analytical method has been performed under NELAP certification, the analysis has met all of the requirements of the NELAC standard unless qualified on the Certificate of Analysis.

This data report has been prepared and reviewed in accordance with General Engineering Laboratories, LLC standard operating procedures. Please direct any questions to your Project Manager, Amy Jamison.

Reviewed by

GENERAL ENGINEERING LABORATORIES, LLC
2040 Savage Road Charleston SC 29407 - (843) 556-8171 - www.gel.com

Certificate of Analysis

Company : Hall Environmental Analysis Labs
Address : 4901 Hawkins Ne
Suite D
Albuquerque, New Mexico 87109
Contact: Nancy McDuffie
Project: Hall Environmental

Report Date: December 11, 2003

Client Sample ID: R-26 Cuttings (radiochemistry)
Sample ID: 102538002
Matrix: Soil
Collect Date: 10-NOV-03 12:50
Receive Date: 24-NOV-03
Collector: Client

Project: HALL00103
Client ID: HALL001

Parameter	Qualifier	Result		DL	RL	Units	DF	AnalystDate	Time	Batch	Method
Rad Alpha Spec Analysis											
Alphaspec Am241 Solid											
Alphaspec Pu, Solid											
Alphaspec Th, Solid											
Alphaspec U, Solid											
Rad Gamma Spec Analysis											
Gammaspec, Gamma, Solid Cs137											
Cesium-137	U	ND	+/-0.029	0.0396	0.100	pCi/g		SRB 12/08/03	1914	295765	5
Rad Gas Flow Proportional Counting											
GFPC, Sr90, solid											
Rad Liquid Scintillation Analysis											
LSC, Tritium Dist, Solid											

The following Prep Methods were performed

Method	Description	Analyst	Date	Time	Prep Batch
Ash Soil Prep	Ash Soil Prep, GL-RAD-A-021B	AWB	11/26/03	0728	293729
Dry Soil Prep	Dry Soil Prep GL-RAD-A-021	AWB	11/25/03	1249	293727

The following Analytical Methods were performed

Method	Description	Analyst Comments
1	DOE EML HASL-300, Am-05-RC Modified	
2	DOE EML HASL-300, Pu-11-RC Modified	
3	DOE EML HASL-300, Th-01-RC Modified	
4	DOE EML HASL-300, U-02-RC Modified	
5	EML HASL 300, 4.5.2.3	
6	EPA 905.0 Modified	
7	EPA 906.0 Modified	

Notes:
The Qualifiers in this report are defined as follows :

< Result is less than amount reported.
> Result is greater than amount reported.
B Target analyte was detected in the sample as well as the associated blank.
BD Flag for results below the MDC or a flag for low tracer recovery.

GENERAL ENGINEERING LABORATORIES, LLC
2040 Savage Road Charleston SC 29407 - (843) 556-8171 - www.gel.com

Certificate of Analysis

Company : Hall Environmental Analysis Labs
Address : 4901 Hawkins Ne
Suite D
Albuquerque, New Mexico 87109
Contact: Nancy McDuffie
Project: Hall Environmental

Report Date: December 11, 2003

Client Sample ID: R-26 Cuttings (radiochemistry) Project: HALL00103
Sample ID: 102538002 Client ID: HALL001

Parameter	Qualifier	Result	DL	RL	Units	DF	AnalystDate	Time	Batch	Method

E Concentration of the target analyte exceeds the instrument calibration range.
H Analytical holding time exceeded.
J Indicates an estimated value. The result was greater than the detection limit, but less than the reporting limit.
P The response between the confirmation column and the primary column is >40%D.
U Indicates the target analyte was analyzed for but not detected above the detection limit.
UI Uncertain identification for gamma spectroscopy.
X Lab-specific qualifier-please see case narrative, data summary package or contact your project manager for details.
Y QC Samples were not spiked with this compound.
h Sample preparation or preservation holding time exceeded.

The above sample is reported on a dry weight basis except where prohibited by the analytical procedure.
Where the analytical method has been performed under NELAP certification, the analysis has met all of the requirements of the NELAC standard unless qualified on the Certificate of Analysis.

This data report has been prepared and reviewed in accordance with General Engineering Laboratories, LLC standard operating procedures. Please direct any questions to your Project Manager, Amy Jamison.

Reviewed by

GENERAL ENGINEERING LABORATORIES, LLC
2040 Savage Road Charleston SC 29407 - (843) 556-8171 - www.gel.com

Certificate of Analysis

Company : Hall Environmental Analysis Labs
Address : 4901 Hawkins Ne
Suite D
Albuquerque, New Mexico 87109
Contact: Nancy McDuffie
Project: **Hall Environmental**

Report Date: January 15, 2004

Client Sample ID: R-26 Cuttings
Sample ID: 103826001
Matrix: Soil
Collect Date: 12-DEC-03 14:00
Receive Date: 16-DEC-03
Collector: Client

Project: HALL00103
Client ID: HALL001

Parameter	Qualifier	Result	DL	RL	Units	DF	AnalystDate	Time	Batch	Method
LC-MS/MS Explosives										
SW846 8321A Modified Explosives by LC-MS/MS										
1,3,5-Trinitrobenzene	U	ND	9.86	80.0	ug/kg	1	JLW 01/09/04	1745	302199	1
2,4,6-Trinitrotoluene	U	ND	7.68	80.0	ug/kg	1				
2,4-Dinitrotoluene	U	ND	10.0	80.0	ug/kg	1				
2,6-Dinitrotoluene	U	ND	8.90	80.0	ug/kg	1				
2-Amino-4,6-dinitrotoluene	U	ND	15.0	80.0	ug/kg	1				
4-Amino-2,6-dinitrotoluene	U	ND	19.1	80.0	ug/kg	1				
HMX	U	ND	40.0	80.0	ug/kg	1				
Nitrobenzene	U	ND	20.3	80.0	ug/kg	1				
RDX	U	ND	9.35	80.0	ug/kg	1				
Tetryl	U	ND	16.7	80.0	ug/kg	1				
m-Dinitrobenzene	U	ND	10.7	80.0	ug/kg	1				
m-Nitrotoluene	U	ND	23.8	80.0	ug/kg	1				
o-Nitrotoluene	U	ND	26.5	80.0	ug/kg	1				
p-Nitrotoluene	U	ND	80.0	80.0	ug/kg	1				

The following Prep Methods were performed

Method	Description	Analyst	Date	Time	Prep Batch
SW846 8330 PREP	8330 EXPLOSIVES BY HPLC Prep in soil	KXV1	12/21/03	1100	298568
SW846 8330 PREP	SW846 8330 Explosives Extraction in Solids	KXV1	12/21/03	1100	302198

The following Analytical Methods were performed

Method	Description	Analyst Comments
1	SW846 8321A Modified	
2	SW846 8321A Modified	

Surrogate/Tracer recovery	Test	Recovery%	Acceptable Limits
1,2-dinitrobenzene	SW846 8321A Modified Explosives by LC-MS/MS	55 *	(63%-119%)

Notes:
The Qualifiers in this report are defined as follows :

< Result is less than amount reported.
> Result is greater than amount reported.
B Target analyte was detected in the sample as well as the associated blank.
BD Flag for results below the MDC or a flag for low tracer recovery.

GENERAL ENGINEERING LABORATORIES, LLC
2040 Savage Road Charleston SC 29407 - (843) 556-8171 - www.gel.com

Certificate of Analysis

Company : Hall Environmental Analysis Labs
Address : 4901 Hawkins Ne
Suite D
Albuquerque, New Mexico 87109
Contact: Nancy McDuffie
Project: **Hall Environmental**

Report Date: January 15, 2004

Client Sample ID: R-26 Cuttings
Sample ID: 103826001

Project: HALL00103
Client ID: HALL001

Parameter	Qualifier	Result	DL	RL	Units	DF	AnalystDate	Time	Batch	Method

E Concentration of the target analyte exceeds the instrument calibration range.
H Analytical holding time exceeded.
J Indicates an estimated value. The result was greater than the detection limit, but less than the reporting limit.
P The response between the confirmation column and the primary column is >40%D.
U Indicates the target analyte was analyzed for but not detected above the detection limit.
UI Uncertain identification for gamma spectroscopy.
X Lab-specific qualifier-please see case narrative, data summary package or contact your project manager for details.
Y QC Samples were not spiked with this compound.
h Sample preparation or preservation holding time exceeded.

The above sample is reported on an "as received" basis.

Where the analytical method has been performed under NELAP certification, the analysis has met all of the requirements of the NELAC standard unless qualified on the Certificate of Analysis.

This data report has been prepared and reviewed in accordance with General Engineering Laboratories, LLC standard operating procedures. Please direct any questions to your Project Manager, Amy Jamison.

Reviewed by

Hall Environmental
Analysis Laboratory

COVER LETTER

December 22, 2003

Mark Everett
Kleinfelder
8300 Jefferson, NE Suite B
Albuquerque, NM 87113
TEL: (505) 344-7373
FAX (505) 344-1711

RE: R-26 Order No.: 0311068

Dear Mark Everett:

Hall Environmental Analysis Laboratory received 3 samples on 11/10/2003 for the analyses presented in the following report.

These were analyzed according to EPA procedures or equivalent.

Reporting limits are determined by EPA methodology. No determination of compounds below these (denoted by the ND or < sign) has been made.

Please don't hesitate to contact HEAL for any additional information or clarifications.

Sincerely,

Andy Freeman, Business Manager
Nancy McDuffie, Laboratory Manager

Andy Freeman
Business Manager

Hall Environmental Analysis Laboratory

Date: *22-Dec-03*

CLIENT: Kleinfelder
Client Sample ID: R-26 pit
Lab Order: 0311068
Collection Date: 11/10/2003 12:50:00 PM
Project: R-26
Lab ID: 0311068-01
Matrix: AQUEOUS

Analyses	Result	Limit	Qual	Units	DF	Date Analyzed
EPA METHOD 300.0: ANIONS						Analyst: **BDH**
Fluoride	0.21	0.10		mg/L	1	11/10/2003 10:16:48 PM
Chloride	2.4	0.10		mg/L	1	11/10/2003 10:16:48 PM
Nitrogen, Nitrite (As N)	ND	0.10		mg/L	1	11/10/2003 10:16:48 PM
Bromide	6.7	0.10		mg/L	1	11/10/2003 10:16:48 PM
Nitrogen, Nitrate (As N)	ND	0.10		mg/L	1	11/10/2003 10:16:48 PM
Phosphorus, Orthophosphate (As P)	ND	0.50		mg/L	1	11/10/2003 10:16:48 PM
Sulfate	49	0.50		mg/L	1	11/10/2003 10:16:48 PM
EPA METHOD 8082: PCB'S						Analyst: **GT**
Aroclor 1016	ND	1.0		µg/L	1	11/20/2003 10:20:09 AM
Aroclor 1221	ND	5.0		µg/L	1	11/20/2003 10:20:09 AM
Aroclor 1232	ND	1.0		µg/L	1	11/20/2003 10:20:09 AM
Aroclor 1242	ND	1.0		µg/L	1	11/20/2003 10:20:09 AM
Aroclor 1248	ND	1.0		µg/L	1	11/20/2003 10:20:09 AM
Aroclor 1254	ND	1.0		µg/L	1	11/20/2003 10:20:09 AM
Aroclor 1260	ND	1.0		µg/L	1	11/20/2003 10:20:09 AM
Surr: Decachlorobiphenyl	87.4	76-111		%REC	1	11/20/2003 10:20:09 AM
Surr: Tetrachloro-m-xylene	67.4	47-94		%REC	1	11/20/2003 10:20:09 AM
EPA METHOD 8260B: VOLATILES						Analyst: **JDC**
Benzene	ND	10		µg/L	10	11/11/2003
Toluene	13	10		µg/L	10	11/11/2003
Ethylbenzene	ND	10		µg/L	10	11/11/2003
Methyl tert-butyl ether (MTBE)	ND	10		µg/L	10	11/11/2003
1,2,4-Trimethylbenzene	ND	10		µg/L	10	11/11/2003
1,3,5-Trimethylbenzene	ND	10		µg/L	10	11/11/2003
1,2-Dichloroethane (EDC)	ND	10		µg/L	10	11/11/2003
1,2-Dibromoethane (EDB)	ND	10		µg/L	10	11/11/2003
Naphthalene	ND	20		µg/L	10	11/11/2003
1-Methylnaphthalene	ND	40		µg/L	10	11/11/2003
2-Methylnaphthalene	ND	40		µg/L	10	11/11/2003
Acetone	2100	100		µg/L	10	11/11/2003
Bromobenzene	ND	10		µg/L	10	11/11/2003
Bromochloromethane	ND	10		µg/L	10	11/11/2003
Bromodichloromethane	ND	10		µg/L	10	11/11/2003
Bromoform	ND	10		µg/L	10	11/11/2003
Bromomethane	ND	20		µg/L	10	11/11/2003
2-Butanone	ND	100		µg/L	10	11/11/2003
Carbon disulfide	ND	100		µg/L	10	11/11/2003
Carbon Tetrachloride	ND	10		µg/L	10	11/11/2003
Chlorobenzene	ND	10		µg/L	10	11/11/2003
Chloroethane	ND	20		µg/L	10	11/11/2003

Qualifiers:

ND - Not Detected at the Reporting Limit
J - Analyte detected below quantitation limits
B - Analyte detected in the associated Method Blank
* - Value exceeds Maximum Contaminant Level
S - Spike Recovery outside accepted recovery limits
R - RPD outside accepted recovery limits
E - Value above quantitation range

Hall Environmental Analysis Laboratory

Date: *22-Dec-03*

CLIENT: Kleinfelder
Lab Order: 0311068
Project: R-26
Lab ID: 0311068-01

Client Sample ID: R-26 pit
Collection Date: 11/10/2003 12:50:00 PM
Matrix: AQUEOUS

Analyses	Result	Limit	Qual	Units	DF	Date Analyzed
Chloroform	ND	10		µg/L	10	11/11/2003
Chloromethane	ND	10		µg/L	10	11/11/2003
2-Chlorotoluene	ND	10		µg/L	10	11/11/2003
4-Chlorotoluene	ND	10		µg/L	10	11/11/2003
cis-1,2-DCE	ND	10		µg/L	10	11/11/2003
cis-1,3-Dichloropropene	ND	10		µg/L	10	11/11/2003
1,2-Dibromo-3-chloropropane	ND	20		µg/L	10	11/11/2003
Dibromochloromethane	ND	10		µg/L	10	11/11/2003
Dibromomethane	ND	20		µg/L	10	11/11/2003
1,2-Dichlorobenzene	ND	10		µg/L	10	11/11/2003
1,3-Dichlorobenzene	ND	10		µg/L	10	11/11/2003
1,4-Dichlorobenzene	ND	10		µg/L	10	11/11/2003
Dichlorodifluoromethane	ND	10		µg/L	10	11/11/2003
1,1-Dichloroethane	ND	10		µg/L	10	11/11/2003
1,1-Dichloroethene	ND	10		µg/L	10	11/11/2003
1,2-Dichloropropane	ND	10		µg/L	10	11/11/2003
1,3-Dichloropropane	ND	10		µg/L	10	11/11/2003
2,2-Dichloropropane	ND	10		µg/L	10	11/11/2003
1,1-Dichloropropene	ND	10		µg/L	10	11/11/2003
Hexachlorobutadiene	ND	10		µg/L	10	11/11/2003
2-Hexanone	ND	100		µg/L	10	11/11/2003
Isopropylbenzene	ND	10		µg/L	10	11/11/2003
4-Isopropyltoluene	ND	10		µg/L	10	11/11/2003
4-Methyl-2-pentanone	ND	100		µg/L	10	11/11/2003
Methylene Chloride	ND	30		µg/L	10	11/11/2003
n-Butylbenzene	ND	10		µg/L	10	11/11/2003
n-Propylbenzene	ND	10		µg/L	10	11/11/2003
sec-Butylbenzene	ND	10		µg/L	10	11/11/2003
Styrene	ND	10		µg/L	10	11/11/2003
tert-Butylbenzene	ND	10		µg/L	10	11/11/2003
1,1,1,2-Tetrachloroethane	ND	10		µg/L	10	11/11/2003
1,1,2,2-Tetrachloroethane	ND	10		µg/L	10	11/11/2003
Tetrachloroethene (PCE)	ND	10		µg/L	10	11/11/2003
trans-1,2-DCE	ND	10		µg/L	10	11/11/2003
trans-1,3-Dichloropropene	ND	10		µg/L	10	11/11/2003
1,2,3-Trichlorobenzene	ND	10		µg/L	10	11/11/2003
1,2,4-Trichlorobenzene	ND	10		µg/L	10	11/11/2003
1,1,1-Trichloroethane	ND	10		µg/L	10	11/11/2003
1,1,2-Trichloroethane	ND	10		µg/L	10	11/11/2003
Trichloroethene (TCE)	ND	10		µg/L	10	11/11/2003
Trichlorofluoromethane	ND	10		µg/L	10	11/11/2003
1,2,3-Trichloropropane	ND	20		µg/L	10	11/11/2003

Qualifiers:

ND - Not Detected at the Reporting Limit
J - Analyte detected below quantitation limits
B - Analyte detected in the associated Method Blank
* - Value exceeds Maximum Contaminant Level
S - Spike Recovery outside accepted recovery limits
R - RPD outside accepted recovery limits
E - Value above quantitation range

CLIENT: Kleinfelder
Lab Order: 0311068
Project: R-26
Lab ID: 0311068-01

Client Sample ID: R-26 pit
Collection Date: 11/10/2003 12:50:00 PM
Matrix: AQUEOUS

Analyses	Result	Limit	Qual	Units	DF	Date Analyzed
Vinyl chloride	ND	20		µg/L	10	11/11/2003
Xylenes, Total	ND	10		µg/L	10	11/11/2003
Surr: 1,2-Dichloroethane-d4	96.4	70.6-124		%REC	10	11/11/2003
Surr: 4-Bromofluorobenzene	92.8	76.2-122		%REC	10	11/11/2003
Surr: Dibromofluoromethane	94.1	67.2-131		%REC	10	11/11/2003
Surr: Toluene-d8	107	82.1-123		%REC	10	11/11/2003
EPA METHOD 8270D: SEMIVOLATILES						Analyst: **CS**
Acenaphthene	ND	100		µg/L	1	11/14/2003
Acenaphthylene	ND	100		µg/L	1	11/14/2003
Aniline	ND	100		µg/L	1	11/14/2003
Anthracene	ND	100		µg/L	1	11/14/2003
Azobenzene	ND	100		µg/L	1	11/14/2003
Benz(a)anthracene	ND	100		µg/L	1	11/14/2003
Benzidine	ND	200		µg/L	1	11/14/2003
Benzo(a)pyrene	ND	100		µg/L	1	11/14/2003
Benzo(b)fluoranthene	ND	100		µg/L	1	11/14/2003
Benzo(g,h,i)perylene	ND	100		µg/L	1	11/14/2003
Benzo(k)fluoranthene	ND	100		µg/L	1	11/14/2003
Benzoic acid	ND	500		µg/L	1	11/14/2003
Benzyl alcohol	ND	200		µg/L	1	11/14/2003
Bis(2-chloroethoxy)methane	ND	100		µg/L	1	11/14/2003
Bis(2-chloroethyl)ether	ND	100		µg/L	1	11/14/2003
Bis(2-chloroisopropyl)ether	ND	100		µg/L	1	11/14/2003
Bis(2-ethylhexyl)phthalate	ND	100		µg/L	1	11/14/2003
4-Bromophenyl phenyl ether	ND	100		µg/L	1	11/14/2003
Butyl benzyl phthalate	ND	100		µg/L	1	11/14/2003
Carbazole	ND	100		µg/L	1	11/14/2003
4-Chloro-3-methylphenol	ND	200		µg/L	1	11/14/2003
4-Chloroaniline	ND	200		µg/L	1	11/14/2003
2-Chloronaphthalene	ND	100		µg/L	1	11/14/2003
2-Chlorophenol	ND	100		µg/L	1	11/14/2003
4-Chlorophenyl phenyl ether	ND	100		µg/L	1	11/14/2003
Chrysene	ND	100		µg/L	1	11/14/2003
Di-n-butyl phthalate	ND	100		µg/L	1	11/14/2003
Di-n-octyl phthalate	ND	100		µg/L	1	11/14/2003
Dibenz(a,h)anthracene	ND	100		µg/L	1	11/14/2003
Dibenzofuran	ND	100		µg/L	1	11/14/2003
1,2-Dichlorobenzene	ND	100		µg/L	1	11/14/2003
1,3-Dichlorobenzene	ND	100		µg/L	1	11/14/2003
1,4-Dichlorobenzene	ND	100		µg/L	1	11/14/2003
3,3'-Dichlorobenzidine	ND	100		µg/L	1	11/14/2003
Diethyl phthalate	ND	100		µg/L	1	11/14/2003

Qualifiers:
ND - Not Detected at the Reporting Limit
J - Analyte detected below quantitation limits
B - Analyte detected in the associated Method Blank
* - Value exceeds Maximum Contaminant Level
S - Spike Recovery outside accepted recovery limits
R - RPD outside accepted recovery limits
E - Value above quantitation range

Hall Environmental Analysis Laboratory

Date: *22-Dec-03*

CLIENT: Kleinfelder
Client Sample ID: R-26 pit
Lab Order: 0311068
Collection Date: 11/10/2003 12:50:00 PM
Project: R-26
Lab ID: 0311068-01
Matrix: AQUEOUS

Analyses	Result	Limit	Qual	Units	DF	Date Analyzed
Dimethyl phthalate	ND	100		µg/L	1	11/14/2003
2,4-Dichlorophenol	ND	100		µg/L	1	11/14/2003
2,4-Dimethylphenol	ND	100		µg/L	1	11/14/2003
4,6-Dinitro-2-methylphenol	ND	500		µg/L	1	11/14/2003
2,4-Dinitrophenol	ND	500		µg/L	1	11/14/2003
2,4-Dinitrotoluene	ND	100		µg/L	1	11/14/2003
2,6-Dinitrotoluene	ND	100		µg/L	1	11/14/2003
Fluoranthene	ND	100		µg/L	1	11/14/2003
Fluorene	ND	100		µg/L	1	11/14/2003
Hexachlorobenzene	ND	100		µg/L	1	11/14/2003
Hexachlorobutadiene	ND	100		µg/L	1	11/14/2003
Hexachlorocyclopentadiene	ND	100		µg/L	1	11/14/2003
Hexachloroethane	ND	100		µg/L	1	11/14/2003
Indeno(1,2,3-cd)pyrene	ND	100		µg/L	1	11/14/2003
Isophorone	ND	100		µg/L	1	11/14/2003
2-Methylnaphthalene	ND	100		µg/L	1	11/14/2003
2-Methylphenol	ND	100		µg/L	1	11/14/2003
3+4-Methylphenol	ND	100		µg/L	1	11/14/2003
N-Nitrosodi-n-propylamine	ND	100		µg/L	1	11/14/2003
N-Nitrosodiphenylamine	ND	100		µg/L	1	11/14/2003
Naphthalene	ND	100		µg/L	1	11/14/2003
2-Nitroaniline	ND	500		µg/L	1	11/14/2003
3-Nitroaniline	ND	500		µg/L	1	11/14/2003
4-Nitroaniline	ND	200		µg/L	1	11/14/2003
Nitrobenzene	ND	100		µg/L	1	11/14/2003
2-Nitrophenol	ND	100		µg/L	1	11/14/2003
4-Nitrophenol	ND	500		µg/L	1	11/14/2003
Pentachlorophenol	ND	500		µg/L	1	11/14/2003
Phenanthrene	ND	100		µg/L	1	11/14/2003
Phenol	ND	100		µg/L	1	11/14/2003
Pyrene	ND	100		µg/L	1	11/14/2003
Pyridine	ND	100		µg/L	1	11/14/2003
1,2,4-Trichlorobenzene	ND	100		µg/L	1	11/14/2003
2,4,5-Trichlorophenol	ND	100		µg/L	1	11/14/2003
2,4,6-Trichlorophenol	ND	100		µg/L	1	11/14/2003
Surr: 2,4,6-Tribromophenol	57.2	16.6-115		%REC	1	11/14/2003
Surr: 2-Fluorobiphenyl	47.4	37-95.7		%REC	1	11/14/2003
Surr: 2-Fluorophenol	39.3	9.54-89.8		%REC	1	11/14/2003
Surr: 4-Terphenyl-d14	68.0	47.9-115		%REC	1	11/14/2003
Surr: Nitrobenzene-d5	45.7	38-106		%REC	1	11/14/2003
Surr: Phenol-d6	31.5	10.7-63.4		%REC	1	11/14/2003

Qualifiers:

ND - Not Detected at the Reporting Limit
J - Analyte detected below quantitation limits
B - Analyte detected in the associated Method Blank
* - Value exceeds Maximum Contaminant Level
S - Spike Recovery outside accepted recovery limits
R - RPD outside accepted recovery limits
E - Value above quantitation range

Hall Environmental Analysis Laboratory

Date: *22-Dec-03*

CLIENT: Kleinfelder
Client Sample ID: Trip Blank
Lab Order: 0311068
Collection Date:
Project: R-26
Lab ID: 0311068-02
Matrix: TRIP BLANK

Analyses	Result	Limit	Qual	Units	DF	Date Analyzed
EPA METHOD 8260B: VOLATILES						Analyst: **JDC**
Benzene	ND	1.0		µg/L	1	11/11/2003
Toluene	ND	1.0		µg/L	1	11/11/2003
Ethylbenzene	ND	1.0		µg/L	1	11/11/2003
Methyl tert-butyl ether (MTBE)	ND	1.0		µg/L	1	11/11/2003
1,2,4-Trimethylbenzene	ND	1.0		µg/L	1	11/11/2003
1,3,5-Trimethylbenzene	ND	1.0		µg/L	1	11/11/2003
1,2-Dichloroethane (EDC)	ND	1.0		µg/L	1	11/11/2003
1,2-Dibromoethane (EDB)	ND	1.0		µg/L	1	11/11/2003
Naphthalene	ND	2.0		µg/L	1	11/11/2003
1-Methylnaphthalene	ND	4.0		µg/L	1	11/11/2003
2-Methylnaphthalene	ND	4.0		µg/L	1	11/11/2003
Acetone	ND	10		µg/L	1	11/11/2003
Bromobenzene	ND	1.0		µg/L	1	11/11/2003
Bromochloromethane	ND	1.0		µg/L	1	11/11/2003
Bromodichloromethane	ND	1.0		µg/L	1	11/11/2003
Bromoform	ND	1.0		µg/L	1	11/11/2003
Bromomethane	ND	2.0		µg/L	1	11/11/2003
2-Butanone	ND	10		µg/L	1	11/11/2003
Carbon disulfide	ND	10		µg/L	1	11/11/2003
Carbon Tetrachloride	ND	1.0		µg/L	1	11/11/2003
Chlorobenzene	ND	1.0		µg/L	1	11/11/2003
Chloroethane	ND	2.0		µg/L	1	11/11/2003
Chloroform	ND	1.0		µg/L	1	11/11/2003
Chloromethane	ND	1.0		µg/L	1	11/11/2003
2-Chlorotoluene	ND	1.0		µg/L	1	11/11/2003
4-Chlorotoluene	ND	1.0		µg/L	1	11/11/2003
cis-1,2-DCE	ND	1.0		µg/L	1	11/11/2003
cis-1,3-Dichloropropene	ND	1.0		µg/L	1	11/11/2003
1,2-Dibromo-3-chloropropane	ND	2.0		µg/L	1	11/11/2003
Dibromochloromethane	ND	1.0		µg/L	1	11/11/2003
Dibromomethane	ND	2.0		µg/L	1	11/11/2003
1,2-Dichlorobenzene	ND	1.0		µg/L	1	11/11/2003
1,3-Dichlorobenzene	ND	1.0		µg/L	1	11/11/2003
1,4-Dichlorobenzene	ND	1.0		µg/L	1	11/11/2003
Dichlorodifluoromethane	ND	1.0		µg/L	1	11/11/2003
1,1-Dichloroethane	ND	1.0		µg/L	1	11/11/2003
1,1-Dichloroethene	ND	1.0		µg/L	1	11/11/2003
1,2-Dichloropropane	ND	1.0		µg/L	1	11/11/2003
1,3-Dichloropropane	ND	1.0		µg/L	1	11/11/2003
2,2-Dichloropropane	ND	1.0		µg/L	1	11/11/2003
1,1-Dichloropropene	ND	1.0		µg/L	1	11/11/2003

Qualifiers:
ND - Not Detected at the Reporting Limit
J - Analyte detected below quantitation limits
B - Analyte detected in the associated Method Blank
* - Value exceeds Maximum Contaminant Level
S - Spike Recovery outside accepted recovery limits
R - RPD outside accepted recovery limits
E - Value above quantitation range

Hall Environmental Analysis Laboratory

Date: *22-Dec-03*

CLIENT: Kleinfelder
Client Sample ID: Trip Blank
Lab Order: 0311068
Collection Date:
Project: R-26
Lab ID: 0311068-02
Matrix: TRIP BLANK

Analyses	Result	Limit	Qual	Units	DF	Date Analyzed
Hexachlorobutadiene	ND	1.0		µg/L	1	11/11/2003
2-Hexanone	ND	10		µg/L	1	11/11/2003
Isopropylbenzene	ND	1.0		µg/L	1	11/11/2003
4-Isopropyltoluene	ND	1.0		µg/L	1	11/11/2003
4-Methyl-2-pentanone	ND	10		µg/L	1	11/11/2003
Methylene Chloride	ND	3.0		µg/L	1	11/11/2003
n-Butylbenzene	ND	1.0		µg/L	1	11/11/2003
n-Propylbenzene	ND	1.0		µg/L	1	11/11/2003
sec-Butylbenzene	ND	1.0		µg/L	1	11/11/2003
Styrene	ND	1.0		µg/L	1	11/11/2003
tert-Butylbenzene	ND	1.0		µg/L	1	11/11/2003
1,1,1,2-Tetrachloroethane	ND	1.0		µg/L	1	11/11/2003
1,1,2,2-Tetrachloroethane	ND	1.0		µg/L	1	11/11/2003
Tetrachloroethene (PCE)	ND	1.0		µg/L	1	11/11/2003
trans-1,2-DCE	ND	1.0		µg/L	1	11/11/2003
trans-1,3-Dichloropropene	ND	1.0		µg/L	1	11/11/2003
1,2,3-Trichlorobenzene	ND	1.0		µg/L	1	11/11/2003
1,2,4-Trichlorobenzene	ND	1.0		µg/L	1	11/11/2003
1,1,1-Trichloroethane	ND	1.0		µg/L	1	11/11/2003
1,1,2-Trichloroethane	ND	1.0		µg/L	1	11/11/2003
Trichloroethene (TCE)	ND	1.0		µg/L	1	11/11/2003
Trichlorofluoromethane	ND	1.0		µg/L	1	11/11/2003
1,2,3-Trichloropropane	ND	2.0		µg/L	1	11/11/2003
Vinyl chloride	ND	2.0		µg/L	1	11/11/2003
Xylenes, Total	ND	1.0		µg/L	1	11/11/2003
Surr: 1,2-Dichloroethane-d4	96.2	70.6-124		%REC	1	11/11/2003
Surr: 4-Bromofluorobenzene	89.1	76.2-122		%REC	1	11/11/2003
Surr: Dibromofluoromethane	95.4	67.2-131		%REC	1	11/11/2003
Surr: Toluene-d8	105	82.1-123		%REC	1	11/11/2003

Qualifiers:

ND - Not Detected at the Reporting Limit
J - Analyte detected below quantitation limits
B - Analyte detected in the associated Method Blank
* - Value exceeds Maximum Contaminant Level
S - Spike Recovery outside accepted recovery limits
R - RPD outside accepted recovery limits
E - Value above quantitation range

Environmental Health Laboratories
The Nation's Drinking Water Laboratory

110 S. Hill Street
South Bend, IN 46617
574.233.4777
800.332.4345
Fax: 574.233.8207
www.ehl.cc

LABORATORY REPORT

Client: Hall Environmental
Attn: Andy Freeman
4901 Hawkins NE
Suite A
Albuquerque, NM 87109

Report#: 966062

Priority: Standard Written

Status: Final

Project/Site: R-26 pit / 0311068-01E

Samples Submitted: One groundwater sample

Copies to: None

Collected: 11/10/03 By: Client Received: 11/12/03

REPORT SUMMARY

One groundwater sample was submitted for perchlorate analysis.

Note: Sample container was provided by the client.

Detailed quantitative results are presented on the following page.

We appreciate the opportunity to provide you with this analysis. If you have any questions concerning this report, please do not hesitate to call us at (574) 233-4777.

Note: This report may not be reproduced, except in full, without written approval from Environmental Health Laboratories (EHL). EHL is accredited by the National Environmental Laboratory Accreditation Program (NELAP). This report satisfies the requirements of your project but has not been prepared to comply with NELAP reporting requirements.

REVIEWED BY: William Reeves Reporting Manager DATE: 11/21/03

FINALIZED BY: [signature] f. on DATE: 11-21-03

A Division of Underwriters Laboratories Inc.

Client: Hall Environmental Report#: 966062

PERCHLORATE — Groundwater

Lab#	Sampling Point	MRL	Results
966062	R-26 pit / 0311068-01E	4.0	< 400 † ug/L

Analyzed: 11/14/03 Analyst: NB Method: 314.0

† Result presented is based upon a dilution factor of 100, due to poor sample matrix.

A Division of Underwriters Laboratories Inc.

REFERENCES AND DEFINITIONS OF TERMS

General Chemistry

References: 1. EPA-600/4-79-020
Methods for Chemical Analysis of Water and Wastes
2. Standard Methods For the Examination of Water and Wastewater
Vol. 19, 1995

MRL = EHL's Minimum Reporting Limit

Results: Values presented in the result column represent the lowest reportable value for a parameter after correcting for all sample dilutions.

< = "less than." This number is the lowest reportable value by the procedure used for analysis after factoring in all dilutions.

√ = If dilutions were required for quantitation of specific parameters, they are indicated by a (√) preceding the result.

1 ug/L = 1 microgram per liter (ug/L) = 1 part per billion

A Division of Underwriters Laboratories Inc.

ENERGY LABORATORIES, INC. • 2393 Salt Creek Highway (82601) • P.O. Box 3258 • Casper, WY 82602
Toll Free 888.235.0515 • 307.235.0515 • Fax 307.234.1639 • casper@energylab.com • www.energylab.com

LABORATORY ANALYTICAL REPORT

Client: Hall Environmental
Project: Not Indicated
Lab ID: C03110337-001
Client Sample ID: R-26 Pit 0311068-01D

Report Date: 12/04/03
Collection Date: 11/10/03 12:50
Date Received: 11/11/03
Matrix: Aqueous

Analyses	Result	Units	Qual	RL	MCL/ QCL	Method	Analysis Date / By
MAJOR IONS							
Calcium	10.1	mg/L		1.0		E200.7	11/12/03 18:33 / cp
Magnesium	2.2	mg/L		1.0		E200.7	11/12/03 18:33 / cp
Potassium	4.4	mg/L		1.0		E200.7	11/12/03 18:33 / cp
Sodium	69.4	mg/L		1.0		E200.7	11/12/03 18:33 / cp
METALS - DISSOLVED							
Aluminum	7.23	mg/L		0.001		E200.8	11/22/03 02:14 / smd
Antimony	0.004	mg/L		0.001		E200.8	11/22/03 02:14 / smd
Arsenic	0.031	mg/L	D	0.002		E200.8	11/22/03 02:14 / smd
Barium	0.100	mg/L		0.001		E200.8	11/22/03 02:14 / smd
Beryllium	ND	mg/L		0.001		E200.8	12/02/03 18:41 / smd
Cadmium	ND	mg/L		0.001		E200.8	11/22/03 02:14 / smd
Chromium	0.003	mg/L	D	0.002		E200.8	11/22/03 02:14 / smd
Cobalt	ND	mg/L		0.001		E200.8	11/22/03 02:14 / smd
Copper	0.029	mg/L		0.001		E200.8	11/22/03 02:14 / smd
Iron	1.08	mg/L		0.030		E200.7	11/12/03 18:33 / cp
Lead	0.011	mg/L		0.001		E200.8	11/22/03 02:14 / smd
Manganese	0.072	mg/L		0.001		E200.8	11/22/03 02:14 / smd
Mercury	0.001	mg/L		0.001		E200.8	11/22/03 02:14 / smd
Nickel	ND	mg/L		0.001		E200.8	11/22/03 02:14 / smd
Selenium	ND	mg/L	D	0.005		E200.8	11/22/03 02:14 / smd
Silver	0.009	mg/L		0.001		E200.8	11/22/03 02:14 / smd
Thallium	ND	mg/L		0.001		E200.8	11/22/03 02:14 / smd
Vanadium	0.005	mg/L		0.001		E200.8	11/22/03 02:14 / smd
Zinc	0.135	mg/L		0.001		E200.8	11/22/03 02:14 / smd
RADIONUCLIDES - TOTAL							
Gross Alpha	10.7	pCi/L		1.0		E900.0	11/17/03 09:00 / rs
Gross Alpha precision (±)	1.0	pCi/L				E900.0	11/17/03 09:00 / rs
Gross Gamma	ND	pCi/L		20.0		E901.1	11/13/03 09:38 / db
Tritium	ND	pCi/L		1200		E906.0	11/12/03 12:00 / db

Report Definitions:
RL - Analyte reporting limit.
QCL - Quality control limit.
D - RL increased due to sample matrix interference.
MCL - Maximum contaminant level.
ND - Not detected at the reporting limit.

TRACKING NO. PAGE NO.
I I0337R0001

ENERGY LABORATORIES, INC. • 2393 Salt Creek Highway (82601) • P.O. Box 3258 • Casper, WY 82602
Toll Free 888.235.0515 • 307.235.0515 • Fax 307.234.1639 • casper@energylab.com • www.energylab.com

QA/QC Summary Report

Client: Hall Environmental
Project: Not Indicated

Report Date: 12/04/03
Work Order: C03110337

Analyte	Result	Units	RL	%REC	Low Limit	High Limit	RPD	RPDLimit	Qual
Method: E200.7									Batch: 4581
Sample ID: C03110365-001CMS1	Matrix Spike								11/12/03 17:57
Calcium	766	mg/L	1.00	99.5	80	120			
Magnesium	528	mg/L	1.00	96.3	80	120			
Potassium	504	mg/L	1.00	94.8	80	120			
Sodium	541	mg/L	1.00	88.7	80	120			
Sample ID: C03110365-001CMSD1	Matrix Spike Duplicate								11/12/03 18:05
Calcium	763	mg/L	1.00	98.9	80	120	0.4	20	
Magnesium	528	mg/L	1.00	96.3	80	120	0	20	
Potassium	507	mg/L	1.00	95.4	80	120	0.6	20	
Sodium	543	mg/L	1.00	89.1	80	120	0.4	20	
Method: E200.8									Batch: 4581
Sample ID: C03110534-001BMS	Matrix Spike								11/21/03 23:09
Antimony	0.534	mg/L	0.00100	106	70	130			
Arsenic	0.456	mg/L	0.00200	91.2	70	130			
Barium	0.567	mg/L	0.00100	109	70	130			
Beryllium	0.383	mg/L	0.00100	75.7	70	130			
Cadmium	0.468	mg/L	0.00100	91.7	70	130			
Chromium	0.509	mg/L	0.00200	102	70	130			
Cobalt	0.548	mg/L	0.00100	99.3	70	130			
Copper	0.520	mg/L	0.00100	87.6	70	130			
Lead	0.530	mg/L	0.00100	106	70	130			
Mercury	0.0543	mg/L	0.00100	109	70	130			
Nickel	0.621	mg/L	0.00100	83.2	70	130			
Thallium	0.531	mg/L	0.00100	106	70	130			
Vanadium	0.536	mg/L	0.00100	106	70	130			
Sample ID: C03110534-001BMSD	Matrix Spike Duplicate								11/21/03 23:14
Antimony	0.516	mg/L	0.00100	103	70	130	3.4	20	
Arsenic	0.450	mg/L	0.00200	90	70	130	1.3	20	
Barium	0.562	mg/L	0.00100	108	70	130	0.9	20	
Beryllium	0.367	mg/L	0.00100	72.5	70	130	4.3	20	
Cadmium	0.455	mg/L	0.00100	89.2	70	130	2.8	20	
Chromium	0.511	mg/L	0.00200	102	70	130	0.4	20	
Cobalt	0.545	mg/L	0.00100	98.7	70	130	0.5	20	
Copper	0.504	mg/L	0.00100	84.4	70	130	3.1	20	
Lead	0.522	mg/L	0.00100	104	70	130	1.5	20	
Mercury	0.0551	mg/L	0.00100	110	70	130	1.5	20	
Nickel	0.597	mg/L	0.00100	78.4	70	130	4.0	20	
Thallium	0.522	mg/L	0.00100	104	70	130	1.7	20	
Vanadium	0.530	mg/L	0.00100	105	70	130	1.2	20	

Qualifiers: RL - Analyte reporting limit. ND - Not detected at the reporting limit.

TRACKING NO. PAGE NO.
110337R0002

ENERGY LABORATORIES, INC. • 2393 Salt Creek Highway (82601) • P.O. Box 3258 • Casper, WY 82602
Toll Free 888.235.0515 • 307.235.0515 • Fax 307.234.1639 • casper@energylab.com • www.energylab.com

QA/QC Summary Report

Client: Hall Environmental
Project: Not Indicated

Report Date: 12/04/03
Work Order: C03110337

Analyte	Result	Units	RL	%REC	Low Limit	High Limit	RPD	RPDLimit	Qual
Method: E900.0									Batch: R28843
Sample ID: C03110308-001A	Matrix Spike								11/17/03 09:00
Gross Alpha	445	pCi/L	1.00	91.6	70	130			
Sample ID: C03110308-001A	Matrix Spike Duplicate								11/17/03 09:00
Gross Alpha	419	pCi/L	1.00	86.3	70	130	5.9	30	
Sample ID: MB-R28843	Method Blank								11/17/03 09:00
Gross Alpha	ND	pCi/L	1.00						
Sample ID: LCS-R28843	Laboratory Control Spike								11/17/03 09:00
Gross Alpha	454	pCi/L	1.00	93.4	70	130			
Method: E901.1									Batch: R28507
Sample ID: LCS-R28507	Laboratory Control Spike								11/13/03 09:38
Gross Gamma	616000	pCi/L	20.0	95.4	70	130			
Sample ID: MB-R28507	Method Blank								11/13/03 09:38
Gross Gamma	ND	pCi/L	20.0						
Sample ID: C03110337-001ADUP	Sample Duplicate								11/13/03 09:38
Gross Gamma	ND	pCi/L	20.0				0	30	
Method: E906.0									Batch: R28499
Sample ID: C03110337-001BMS	Matrix Spike								11/12/03 12:00
Tritium	2000	pCi/L	1200	88.2	70	130			
Sample ID: C03110337-001BMSD	Matrix Spike Duplicate								11/12/03 12:00
Tritium	1900	pCi/L	1200	82.4	70	130	6.9	30	
Sample ID: MB-R28499	Method Blank								11/12/03 12:00
Tritium	ND	pCi/L	1200						

Qualifiers: RL - Analyte reporting limit. ND - Not detected at the reporting limit.

TRACKING NO. PAGE NO.
110337R0003

Hall Environmental Analysis Laboratory
4901 Hawkins NE, Suite D
Albuquerque, New Mexico 87109-
(505) 345-3975

CHAIN-OF-CUSTODY RECORD

Subcontractor:
Energy Labs
2393 Salt Creek Highway
Casper, WY 82601

TEL: (888) 235-0515
FAX: (307) 234-1639
Acct #:

Project Name:

10-Nov-03

Client Samp ID	LAB ID	Matrix	Collection Date	Bottle Type	Requested Tests E901.1	E906.9	SW9310
R-26 pit	0311068-01D	Aqueous	11/10/2003 12:50:00 PM	1LHDPEHNO3	1	1	1

4

Alpha, Beta, Gamma, Tritium Dissolved Metals (attached list)
Rush perchlorate Please filter an aliquot for metals

Comments: rush 10 day TAT. Please fax (505) 345-4107 results when completed, or email to lab@hallenvironmental.com. Thank you.

	Date/Time		Date/Time
Relinquished by: [signature]	11/10/03	Received by: Sara Hanson	11/11/03 1000
Relinquished by:		Received by:	C0310337

TRACKING NO. PAGE NO.
110337R0004

Report	T	Analyte	MDL	PQL	MCL
Y	A	Aluminum	0	0	0
Y	A	Antimony	0	0	0
Y	A	Arsenic	0	0	0
Y	A	Barium	0	0	0
Y	A	Beryllium	0	0	0
N	A	Bismuth	0	0	0
N	A	Boron	0	0	0
Y	A	Cadmium	0	0	0
Y	A	Calcium	0	0	0
Y	A	Chromium	0	0	0
Y	A	Cobalt	0	0	0
Y	A	Copper	0	0	0
Y	A	Iron	0	0	0
Y	A	Lead	0	0	0
N	A	Lithium	0	0	0
Y	A	Magnesium	0	0	0
Y	A	Manganese	0	0	0
Y	A	Mercury	0	0	0
N	A	Molybdenum	0	0	0
Y	A	Nickel	0	0	0
Y	A	Potassium	0	0	0
Y	A	Selenium	0	0	0
N	A	Silicon	0	0	0
Y	A	Silver	0	0	0
Y	A	Sodium	0	0	0
N	A	Strontium	0	0	0
Y	A	Thallium	0	0	0
N	A	Tin	0	0	0
N	A	Titanium	0	0	0
N	A	Uranium	0	0	0
Y	A	Vanadium	0	0	0
Y	A	Zinc	0	0	0

TRACKING NO. PAGE NO.

110337R0005

Energy Laboratories Inc.

Sample Receipt Checklist

Client Name: HLL-ENVRNMNTL-ALBQRQ

Date and Time Received: 11/11/2003 10:00:00

Work Order Number C03110337

Received by: . sh

Checklist completed by _____ 11/11/03
Signature | Date

Reviewed by _____
Initials | Date

Carrier name: UPS

Shipping container/cooler in good condition?	Yes ☑	No ☐	Not Present ☐
Custody seals intact on shipping container/cooler?	Yes ☑	No ☐	Not Present ☐
Custody seals intact on sample bottles?	Yes ☐	No ☐	Not Present ☑
Chain of custody present?	Yes ☑	No ☐	
Chain of custody signed when relinquished and received?	Yes ☑	No ☐	
Chain of custody agrees with sample labels?	Yes ☑	No ☐	
Samples in proper container/bottle?	Yes ☑	No ☐	
Sample containers intact?	Yes ☑	No ☐	
Sufficient sample volume for indicated test?	Yes ☑	No ☐	
All samples received within holding time?	Yes ☑	No ☐	
Container/Temp Blank temperature in compliance?	Yes ☑	No ☐	6 °C
Water - VOA vials have zero headspace?	Yes ☐	No ☐	No VOA vials submitted ☑
Water - pH acceptable upon receipt?	Yes ☑	No ☐	Not Applicable ☐

Adjusted? _____ Checked by _____

Any No and/or NA (not applicable) response must be detailed in the comments section below.

Client contacted: _____ Date contacted: _____ Person contacted _____

Contacted by: _____ Regarding: _____

Comments:
Sample split, filtered and preserved by lab. Per TAE per Anne Thorne 11-11-03 11:30 disregard perchlorate, she will send a new sample to another lab. Cancel G-Beta per Nancy McDuffie 11-11-03 11:34 per TAE.

Corrective Action _____

TRACKING NO. PAGE NO.
110337R0006

ENERGY LABORATORIES, INC. • 2393 Salt Creek Highway (82601) • P.O. Box 3258 • Casper, WY 82602
Toll Free 888.235.0515 • 307.235.0515 • Fax 307.234.1639 • casper@energylab.com • www.energylab.com

ANALYTICAL SUMMARY REPORT

December 04, 2003

Nancy McDuffie
Hall Environmental
4901 Hawkins NE
Ste D
Albuquerque, NM 87109

Workorder No.: C03110337

Project Name: Not Indicated

Energy Laboratories Inc. received the following 1 sample from Hall Environmental on 11/11/2003 for analysis.

Sample ID	Client Sample ID	Collect Date	Receive Date	Matrix	Test
C03110337-001	R-26 Pit 0311068-01D	11/10/03 12:50	11/11/03	Aqueous	Sample Filtering Metals by ICP, Dissolved Metals by ICP-MS, Dissolved Gross Alpha Gross Gamma Tritium in Water

There were no problems with the analyses and all data for associated QC met EPA or laboratory specifications except where noted in the Case Narrative or Report.

If you have any questions regarding these tests results, please call.

Report Approved By: R.A. Leaching
ROGER GARLING
LABORATORY SUPERVISOR

TRACKING NO. PAGE NO.
110337R0007

ENERGY LABORATORIES, INC. • 2393 Salt Creek Highway (82601) • P.O. Box 3258 • Casper, WY 82602
Toll Free 888.235.0515 • 307.235.0515 • Fax 307.234.1639 • casper@energylab.com • www.energylab.com

Date: *04-Dec-03*

CLIENT: Hall Environmental
Project: Not Indicated
Sample Delivery Group: C03110337

CASE NARRATIVE

THIS IS THE FINAL PAGE OF THE LABORATORY ANALYTICAL REPORT

BRANCH LABORATORY LOCATIONS
eli-b - Energy Laboratories, Inc. - Billings, MT
eli-cs - Energy Laboratories, Inc. - College Station, TX
eli-g - Energy Laboratories, Inc. - Gillette, WY
eli-h - Energy Laboratories, Inc. - Helena, MT
eli-r - Energy Laboratories, Inc. - Rapid City, SD

SUBCONTRACTING ANALYSIS
Subcontracting of sample analyses to an outside laboratory may be required. If so, ENERGY LABORATORIES will utilize its branch laboratories or qualified contract laboratories for this service. Any such laboratories will be indicated within the Laboratory Analytical Report.

SAMPLE TEMPERATURE COMPLIANCE: 4°C (±2°C)
Temperature of samples received may not be considered properly preserved by accepted standards. Samples that are hand delivered immediately after collection shall be considered acceptable if there is evidence that the chilling process has begun.

ENERGY LABORATORIES, INC. - CASPER,WY certifies that certain method selections contained in this report meet requirements as set forth by NELAC. Some client specific reporting requirements may not require NELAC reporting protocol.

ELI appreciates the opportunity to provide you with this analytical service. For additional information and services visit our web page www.energylab.com.

The total number of pages of this report are indicated by the last four digits of the tracking number located in the lower right corner.

Hall Environmental Analysis Laboratory

Date: *22-Dec-03*

CLIENT: Kleinfelder
Client Sample ID: R-26 cuttings
Lab Order: 0311068
Collection Date: 11/10/2003 12:50:00 PM
Project: R-26
Lab ID: 0311068-03
Matrix: SOIL

Analyses	Result	Limit	Qual	Units	DF	Date Analyzed
EPA METHOD 8082: PCB'S						Analyst: JMP
Aroclor 1016	ND	0.050		mg/Kg	1	12/4/2003 5:05:43 PM
Aroclor 1221	ND	0.25		mg/Kg	1	12/4/2003 5:05:43 PM
Aroclor 1232	ND	0.050		mg/Kg	1	12/4/2003 5:05:43 PM
Aroclor 1242	ND	0.050		mg/Kg	1	12/4/2003 5:05:43 PM
Aroclor 1248	ND	0.050		mg/Kg	1	12/4/2003 5:05:43 PM
Aroclor 1254	ND	0.050		mg/Kg	1	12/4/2003 5:05:43 PM
Aroclor 1260	ND	0.050		mg/Kg	1	12/4/2003 5:05:43 PM
Surr: Decachlorobiphenyl	87.4	50.1-115		%REC	1	12/4/2003 5:05:43 PM
EPA METHOD 8260B: VOLATILES						Analyst: BL
Benzene	ND	0.050		mg/Kg	1	11/13/2003
Toluene	ND	0.050		mg/Kg	1	11/13/2003
Ethylbenzene	ND	0.050		mg/Kg	1	11/13/2003
Methyl tert-butyl ether (MTBE)	ND	0.050		mg/Kg	1	11/13/2003
1,2,4-Trimethylbenzene	ND	0.050		mg/Kg	1	11/13/2003
1,3,5-Trimethylbenzene	ND	0.050		mg/Kg	1	11/13/2003
1,2-Dichloroethane (EDC)	ND	0.050		mg/Kg	1	11/13/2003
1,2-Dibromoethane (EDB)	ND	0.050		mg/Kg	1	11/13/2003
Naphthalene	ND	0.10		mg/Kg	1	11/13/2003
1-Methylnaphthalene	ND	0.20		mg/Kg	1	11/13/2003
2-Methylnaphthalene	ND	0.20		mg/Kg	1	11/13/2003
Acetone	ND	0.50		mg/Kg	1	11/13/2003
Bromobenzene	ND	0.050		mg/Kg	1	11/13/2003
Bromochloromethane	ND	0.050		mg/Kg	1	11/13/2003
Bromodichloromethane	ND	0.050		mg/Kg	1	11/13/2003
Bromoform	ND	0.050		mg/Kg	1	11/13/2003
Bromomethane	ND	0.10		mg/Kg	1	11/13/2003
2-Butanone	ND	0.50		mg/Kg	1	11/13/2003
Carbon disulfide	ND	0.50		mg/Kg	1	11/13/2003
Carbon tetrachloride	ND	0.050		mg/Kg	1	11/13/2003
Chlorobenzene	ND	0.050		mg/Kg	1	11/13/2003
Chloroethane	ND	0.10		mg/Kg	1	11/13/2003
Chloroform	ND	0.050		mg/Kg	1	11/13/2003
Chloromethane	ND	0.050		mg/Kg	1	11/13/2003
2-Chlorotoluene	ND	0.050		mg/Kg	1	11/13/2003
4-Chlorotoluene	ND	0.050		mg/Kg	1	11/13/2003
cis-1,2-DCE	ND	0.050		mg/Kg	1	11/13/2003
cis-1,3-Dichloropropene	ND	0.050		mg/Kg	1	11/13/2003
1,2-Dibromo-3-chloropropane	ND	0.10		mg/Kg	1	11/13/2003
Dibromochloromethane	ND	0.050		mg/Kg	1	11/13/2003
Dibromomethane	ND	0.10		mg/Kg	1	11/13/2003

Qualifiers:
ND - Not Detected at the Reporting Limit
J - Analyte detected below quantitation limits
B - Analyte detected in the associated Method Blank
* - Value exceeds Maximum Contaminant Level
S - Spike Recovery outside accepted recovery limits
R - RPD outside accepted recovery limits
E - Value above quantitation range

Hall Environmental Analysis Laboratory

Date: *22-Dec-03*

CLIENT: Kleinfelder
Client Sample ID: R-26 cuttings
Lab Order: 0311068
Collection Date: 11/10/2003 12:50:00 PM
Project: R-26
Lab ID: 0311068-03
Matrix: SOIL

Analyses	Result	Limit	Qual	Units	DF	Date Analyzed
1,2-Dichlorobenzene	ND	0.050		mg/Kg	1	11/13/2003
1,3-Dichlorobenzene	ND	0.050		mg/Kg	1	11/13/2003
1,4-Dichlorobenzene	ND	0.050		mg/Kg	1	11/13/2003
Dichlorodifluoromethane	ND	0.050		mg/Kg	1	11/13/2003
1,1-Dichloroethane	ND	0.050		mg/Kg	1	11/13/2003
1,1-Dichloroethene	ND	0.050		mg/Kg	1	11/13/2003
1,2-Dichloropropane	ND	0.050		mg/Kg	1	11/13/2003
1,3-Dichloropropane	ND	0.050		mg/Kg	1	11/13/2003
2,2-Dichloropropane	ND	0.050		mg/Kg	1	11/13/2003
1,1-Dichloropropene	ND	0.050		mg/Kg	1	11/13/2003
Hexachlorobutadiene	ND	0.050		mg/Kg	1	11/13/2003
2-Hexanone	ND	0.50		mg/Kg	1	11/13/2003
Isopropylbenzene	ND	0.050		mg/Kg	1	11/13/2003
4-Isopropyltoluene	ND	0.050		mg/Kg	1	11/13/2003
4-Methyl-2-pentanone	ND	0.50		mg/Kg	1	11/13/2003
Methylene chloride	ND	0.15		mg/Kg	1	11/13/2003
n-Butylbenzene	ND	0.050		mg/Kg	1	11/13/2003
n-Propylbenzene	ND	0.050		mg/Kg	1	11/13/2003
sec-Butylbenzene	ND	0.050		mg/Kg	1	11/13/2003
Styrene	ND	0.050		mg/Kg	1	11/13/2003
tert-Butylbenzene	ND	0.050		mg/Kg	1	11/13/2003
1,1,1,2-Tetrachloroethane	ND	0.050		mg/Kg	1	11/13/2003
1,1,2,2-Tetrachloroethane	ND	0.050		mg/Kg	1	11/13/2003
Tetrachloroethene (PCE)	ND	0.050		mg/Kg	1	11/13/2003
trans-1,2-DCE	ND	0.050		mg/Kg	1	11/13/2003
trans-1,3-Dichloropropene	ND	0.050		mg/Kg	1	11/13/2003
1,2,3-Trichlorobenzene	ND	0.050		mg/Kg	1	11/13/2003
1,2,4-Trichlorobenzene	ND	0.050		mg/Kg	1	11/13/2003
1,1,1-Trichloroethane	ND	0.050		mg/Kg	1	11/13/2003
1,1,2-Trichloroethane	ND	0.050		mg/Kg	1	11/13/2003
Trichloroethene (TCE)	ND	0.050		mg/Kg	1	11/13/2003
Trichlorofluoromethane	ND	0.050		mg/Kg	1	11/13/2003
1,2,3-Trichloropropane	ND	0.10		mg/Kg	1	11/13/2003
Vinyl chloride	ND	0.10		mg/Kg	1	11/13/2003
Xylenes, Total	ND	0.050		mg/Kg	1	11/13/2003
Surr: 1,2-Dichloroethane-d4	111	68.4-123		%REC	1	11/13/2003
Surr: 4-Bromofluorobenzene	93.8	70-119		%REC	1	11/13/2003
Surr: Dibromofluoromethane	98.3	76.8-123		%REC	1	11/13/2003
Surr: Toluene-d8	111	85.2-123		%REC	1	11/13/2003
EPA METHOD 8270D: SEMIVOLATILES						Analyst: **CS**
Acenaphthene	ND	0.20		mg/Kg	1	11/21/2003
Acenaphthylene	ND	0.20		mg/Kg	1	11/21/2003

Qualifiers:
ND - Not Detected at the Reporting Limit
J - Analyte detected below quantitation limits
B - Analyte detected in the associated Method Blank
* - Value exceeds Maximum Contaminant Level
S - Spike Recovery outside accepted recovery limits
R - RPD outside accepted recovery limits
E - Value above quantitation range

Hall Environmental Analysis Laboratory

Date: *22-Dec-03*

CLIENT: Kleinfelder
Client Sample ID: R-26 cuttings
Lab Order: 0311068
Collection Date: 11/10/2003 12:50:00 PM
Project: R-26
Lab ID: 0311068-03
Matrix: SOIL

Analyses	Result	Limit	Qual	Units	DF	Date Analyzed
Aniline	ND	0.20		mg/Kg	1	11/21/2003
Anthracene	ND	0.20		mg/Kg	1	11/21/2003
Azobenzene	ND	0.20		mg/Kg	1	11/21/2003
Benz(a)anthracene	ND	0.20		mg/Kg	1	11/21/2003
Benzidine	ND	0.20		mg/Kg	1	11/21/2003
Benzo(a)pyrene	ND	0.20		mg/Kg	1	11/21/2003
Benzo(b)fluoranthene	ND	0.20		mg/Kg	1	11/21/2003
Benzo(g,h,i)perylene	ND	0.20		mg/Kg	1	11/21/2003
Benzo(k)fluoranthene	ND	0.20		mg/Kg	1	11/21/2003
Benzoic acid	ND	0.50		mg/Kg	1	11/21/2003
Benzyl alcohol	ND	0.20		mg/Kg	1	11/21/2003
Bis(2-chloroethoxy)methane	ND	0.20		mg/Kg	1	11/21/2003
Bis(2-chloroethyl)ether	ND	0.20		mg/Kg	1	11/21/2003
Bis(2-chloroisopropyl)ether	ND	0.20		mg/Kg	1	11/21/2003
Bis(2-ethylhexyl)phthalate	ND	0.20		mg/Kg	1	11/21/2003
4-Bromophenyl phenyl ether	ND	0.20		mg/Kg	1	11/21/2003
Butyl benzyl phthalate	ND	0.20		mg/Kg	1	11/21/2003
Carbazole	ND	0.20		mg/Kg	1	11/21/2003
4-Chloro-3-methylphenol	ND	0.20		mg/Kg	1	11/21/2003
4-Chloroaniline	ND	0.20		mg/Kg	1	11/21/2003
2-Chloronaphthalene	ND	0.20		mg/Kg	1	11/21/2003
2-Chlorophenol	ND	0.20		mg/Kg	1	11/21/2003
4-Chlorophenyl phenyl ether	ND	0.20		mg/Kg	1	11/21/2003
Chrysene	ND	0.20		mg/Kg	1	11/21/2003
Di-n-butyl phthalate	0.25	0.20	B	mg/Kg	1	11/21/2003
Di-n-octyl phthalate	ND	0.20		mg/Kg	1	11/21/2003
Dibenz(a,h)anthracene	ND	0.20		mg/Kg	1	11/21/2003
Dibenzofuran	ND	0.20		mg/Kg	1	11/21/2003
1,2-Dichlorobenzene	ND	0.20		mg/Kg	1	11/21/2003
1,3-Dichlorobenzene	ND	0.20		mg/Kg	1	11/21/2003
1,4-Dichlorobenzene	ND	0.20		mg/Kg	1	11/21/2003
3,3'-Dichlorobenzidine	ND	0.20		mg/Kg	1	11/21/2003
Diethyl phthalate	ND	0.20		mg/Kg	1	11/21/2003
Dimethyl phthalate	ND	0.20		mg/Kg	1	11/21/2003
2,4-Dichlorophenol	ND	0.20		mg/Kg	1	11/21/2003
2,4-Dimethylphenol	ND	0.20		mg/Kg	1	11/21/2003
4,6-Dinitro-2-methylphenol	ND	0.50		mg/Kg	1	11/21/2003
2,4-Dinitrophenol	ND	0.50		mg/Kg	1	11/21/2003
2,4-Dinitrotoluene	ND	0.20		mg/Kg	1	11/21/2003
2,6-Dinitrotoluene	ND	0.20		mg/Kg	1	11/21/2003
Fluoranthene	ND	0.20		mg/Kg	1	11/21/2003
Fluorene	ND	0.20		mg/Kg	1	11/21/2003

Qualifiers:

ND - Not Detected at the Reporting Limit
J - Analyte detected below quantitation limits
B - Analyte detected in the associated Method Blank
* - Value exceeds Maximum Contaminant Level
S - Spike Recovery outside accepted recovery limits
R - RPD outside accepted recovery limits
E - Value above quantitation range

Hall Environmental Analysis Laboratory

Date: *22-Dec-03*

CLIENT: Kleinfelder
Client Sample ID: R-26 cuttings
Lab Order: 0311068
Collection Date: 11/10/2003 12:50:00 PM
Project: R-26
Lab ID: 0311068-03
Matrix: SOIL

Analyses	Result	Limit	Qual	Units	DF	Date Analyzed
Hexachlorobenzene	ND	0.20		mg/Kg	1	11/21/2003
Hexachlorobutadiene	ND	0.20		mg/Kg	1	11/21/2003
Hexachlorocyclopentadiene	ND	0.20		mg/Kg	1	11/21/2003
Hexachloroethane	ND	0.20		mg/Kg	1	11/21/2003
Indeno(1,2,3-cd)pyrene	ND	0.20		mg/Kg	1	11/21/2003
Isophorone	ND	0.20		mg/Kg	1	11/21/2003
2-Methylnaphthalene	ND	0.20		mg/Kg	1	11/21/2003
2-Methylphenol	ND	0.20		mg/Kg	1	11/21/2003
3+4-Methylphenol	ND	0.20		mg/Kg	1	11/21/2003
N-Nitrosodi-n-propylamine	ND	0.20		mg/Kg	1	11/21/2003
N-Nitrosodiphenylamine	ND	0.20		mg/Kg	1	11/21/2003
Naphthalene	ND	0.20		mg/Kg	1	11/21/2003
2-Nitroaniline	ND	0.50		mg/Kg	1	11/21/2003
3-Nitroaniline	ND	0.50		mg/Kg	1	11/21/2003
4-Nitroaniline	ND	0.20		mg/Kg	1	11/21/2003
Nitrobenzene	ND	0.20		mg/Kg	1	11/21/2003
2-Nitrophenol	ND	0.20		mg/Kg	1	11/21/2003
4-Nitrophenol	ND	0.20		mg/Kg	1	11/21/2003
Pentachlorophenol	ND	0.50		mg/Kg	1	11/21/2003
Phenanthrene	ND	0.20		mg/Kg	1	11/21/2003
Phenol	ND	0.20		mg/Kg	1	11/21/2003
Pyrene	ND	0.20		mg/Kg	1	11/21/2003
Pyridine	ND	0.50		mg/Kg	1	11/21/2003
1,2,4-Trichlorobenzene	ND	0.20		mg/Kg	1	11/21/2003
2,4,5-Trichlorophenol	ND	0.20		mg/Kg	1	11/21/2003
2,4,6-Trichlorophenol	ND	0.20		mg/Kg	1	11/21/2003
Surr: 2,4,6-Tribromophenol	75.9	26-156		%REC	1	11/21/2003
Surr: 2-Fluorobiphenyl	82.5	23.6-111		%REC	1	11/21/2003
Surr: 2-Fluorophenol	67.4	21.5-107		%REC	1	11/21/2003
Surr: 4-Terphenyl-d14	98.3	30-220		%REC	1	11/21/2003
Surr: Nitrobenzene-d5	70.3	25.3-115		%REC	1	11/21/2003
Surr: Phenol-d6	79.0	25.2-115		%REC	1	11/21/2003
MERCURY, TCLP LEACHED						Analyst: **MAP**
Mercury	ND	0.020		mg/L	1	11/21/2003
EPA METHOD 6010C: TCLP METALS						Analyst: **NMO**
Arsenic	ND	5.0		mg/L	1	11/21/2003 11:14:44 AM
Barium	ND	100		mg/L	1	11/21/2003 11:14:44 AM
Cadmium	ND	1.0		mg/L	1	11/21/2003 11:14:44 AM
Chromium	ND	5.0		mg/L	1	11/21/2003 11:14:44 AM
Lead	ND	5.0		mg/L	1	11/21/2003 11:14:44 AM
Selenium	ND	1.0		mg/L	1	11/21/2003 11:14:44 AM

Qualifiers:
ND - Not Detected at the Reporting Limit
J - Analyte detected below quantitation limits
B - Analyte detected in the associated Method Blank
* - Value exceeds Maximum Contaminant Level
S - Spike Recovery outside accepted recovery limits
R - RPD outside accepted recovery limits
E - Value above quantitation range

Hall Environmental Analysis Laboratory

Date: *22-Dec-03*

CLIENT:	Kleinfelder	**Client Sample ID:**	R-26 cuttings
Lab Order:	0311068	**Collection Date:**	11/10/2003 12:50:00 PM
Project:	R-26		
Lab ID:	0311068-03	**Matrix:**	SOIL

Analyses	Result	Limit	Qual	Units	DF	Date Analyzed
Silver	ND	5.0		mg/L	1	11/21/2003 11:14:44 AM

Qualifiers:

ND - Not Detected at the Reporting Limit

J - Analyte detected below quantitation limits

B - Analyte detected in the associated Method Blank

* - Value exceeds Maximum Contaminant Level

S - Spike Recovery outside accepted recovery limits

R - RPD outside accepted recovery limits

E - Value above quantitation range

GENERAL ENGINEERING LABORATORIES, LLC
2040 Savage Road Charleston SC 29407 - (843) 556-8171 - www.gel.com

Certificate of Analysis

Company : Hall Environmental Analysis Labs
Address : 4901 Hawkins Ne
Suite D
Albuquerque, New Mexico 87109
Contact: Nancy McDuffie
Project: Hall Environmental

Report Date: December 18, 2003

Client Sample ID: R-26 Cuttings (Chemistry)
Sample ID: 102538001
Matrix: Soil
Collect Date: 10-NOV-03 12:50
Receive Date: 24-NOV-03
Collector: Client
Moisture: 3.46%

Project: HALL00103
Client ID: HALL001

Parameter	Qualifier	Result	DL	RL	Units	DF	Analyst	Date	Time	Batch	Method
HPLC Explosives											
8330 EXPLO. Std list Soil											
1,3,5-Trinitrobenzene	Uh	ND	29.0	80.0	ug/kg	1	MAP	12/02/03	1937	293844	1
2,4,6-Trinitrotoluene	Uh	ND	48.0	80.0	ug/kg	1					
2,4-Dinitrotoluene	Uh	ND	55.0	80.0	ug/kg	1					
2,6-Dinitrotoluene	Uh	ND	48.0	80.0	ug/kg	1					
2-Amino-4,6-dinitrotoluene	Uh	ND	18.1	80.0	ug/kg	1					
4-Amino-2,6-dinitrotoluene	Uh	ND	34.1	80.0	ug/kg	1					
HMX	Uh	ND	48.0	80.0	ug/kg	1					
Nitrobenzene	Uh	ND	48.0	80.0	ug/kg	1					
RDX	Uh	ND	48.0	80.0	ug/kg	1					
Tetryl	Uh	ND	22.1	80.0	ug/kg	1					
m-Dinitrobenzene	Uh	ND	34.1	80.0	ug/kg	1					
m-Nitrotoluene	Uh	ND	24.0	80.0	ug/kg	1					
o-Nitrotoluene	Uh	ND	24.0	80.0	ug/kg	1					
p-Nitrotoluene	Uh	ND	24.0	80.0	ug/kg	1					
Mercury Analysis-CVAA											
7471 Cold Vapor Hg in Solid											
Mercury	J	9.75	0.992	10.1	ug/kg	1	NOR1	12/01/03	1118	293699	2
Metals Analysis-ICP											
6010/3050 ICP SCAN Metals Soil											
Aluminum		5930000	822	10400	ug/kg	2	RMJ	12/03/03	2104	293758	3
Antimony	U	ND	356	1040	ug/kg	2					
Arsenic		2640	214	518	ug/kg	2					
Barium		70500	69.1	518	ug/kg	2					
Beryllium	J	460	51.8	518	ug/kg	2					
Cadmium	U	ND	49.5	518	ug/kg	2					
Calcium		2700000	1350	10400	ug/kg	2					
Chromium		5660	167	518	ug/kg	2					
Cobalt		2370	82.7	518	ug/kg	2					
Copper		7720	210	518	ug/kg	2					
Iron		7650000	1620	10400	ug/kg	2					
Lead		38000	294	518	ug/kg	2					
Magnesium		776000	606	10400	ug/kg	2					
Manganese		295000	135	1040	ug/kg	2					
Nickel		5490	88.5	518	ug/kg	2					
Potassium		515000	3700	10400	ug/kg	2					
Selenium	J	471	168	518	ug/kg	2					

GENERAL ENGINEERING LABORATORIES, LLC
2040 Savage Road Charleston SC 29407 - (843) 556-8171 - www.gel.com

Certificate of Analysis

Company : Hall Environmental Analysis Labs
Address : 4901 Hawkins Ne
Suite D
Albuquerque, New Mexico 87109
Contact: Nancy McDuffie
Project: Hall Environmental

Report Date: December 18, 2003

Client Sample ID: R-26 Cuttings (Chemistry) Project: HALL00103
Sample ID: 102538001 Client ID: HALL001

Parameter	Qualifier	Result	DL	RL	Units	DF	AnalystDate	Time	Batch	Method
Metals Analysis-ICP										
6010/3050 ICP SCAN Metals Soil										
Silver	U	ND	93.4	518	ug/kg	2				
Sodium		441000	3760	10400	ug/kg	2				
Thallium	U	ND	1040	2070	ug/kg	2				
Vanadium		9820	94.1	518	ug/kg	2				
Zinc		27100	174	518	ug/kg	2				

The following Prep Methods were performed

Method	Description	Analyst	Date	Time	Prep Batch
SW846 3050B	846 3050BS PREP	CQH1	12/02/03	1623	293757
SW846 7471A Prep	EPA 7471A Mercury Prep Soil	ETL	11/26/03	1115	293697
SW846 8330 PREP	8330 EXPLOSIVES BY HPLC Prep in soil	HMF1	12/01/03	1200	293843

The following Analytical Methods were performed

Method	Description	Analyst Comments
1	SW846 8330	
2	SW846 7471A	
3	SW846 3050B/6010B	

Surrogate/Tracer recovery	Test	Recovery%	Acceptable Limits
1,2-dinitrobenzene	8330 EXPLO. Std list Soil	83	(76%-114%)

Notes:
The Qualifiers in this report are defined as follows :

< Result is less than amount reported.
> Result is greater than amount reported.
B Target analyte was detected in the sample as well as the associated blank.
BD Flag for results below the MDC or a flag for low tracer recovery.
E Concentration of the target analyte exceeds the instrument calibration range.
H Analytical holding time exceeded.
J Indicates an estimated value. The result was greater than the detection limit, but less than the reporting limit.
P The response between the confirmation column and the primary column is >40%D.
U Indicates the target analyte was analyzed for but not detected above the detection limit.
UI Uncertain identification for gamma spectroscopy.
X Lab-specific qualifier-please see case narrative, data summary package or contact your project manager for details.
Y QC Samples were not spiked with this compound.
h Sample preparation or preservation holding time exceeded.

The above sample is reported on a dry weight basis except where prohibited by the analytical procedure.

GENERAL ENGINEERING LABORATORIES, LLC
2040 Savage Road Charleston SC 29407 - (843) 556-8171 - www.gel.com

Certificate of Analysis

Company : Hall Environmental Analysis Labs
Address : 4901 Hawkins Ne
Suite D
Albuquerque, New Mexico 87109
Contact: Nancy McDuffie
Project: Hall Environmental

Report Date: December 18, 2003

Client Sample ID: R-26 Cuttings (Chemistry)
Sample ID: 102538001

Project: HALL00103
Client ID: HALL001

Parameter	Qualifier	Result	DL	RL	Units	DF	AnalystDate	Time	Batch	Method

Where the analytical method has been performed under NELAP certification, the analysis has met all of the requirements of the NELAC standard unless qualified on the Certificate of Analysis.

This data report has been prepared and reviewed in accordance with General Engineering Laboratories, LLC standard operating procedures. Please direct any questions to your Project Manager, Amy Jamison.

Reviewed by

GENERAL ENGINEERING LABORATORIES, LLC

2040 Savage Road Charleston SC 29407 - (843) 556-8171 - www.gel.com

Certificate of Analysis

Company : Hall Environmental Analysis Labs
Address : 4901 Hawkins Ne
Suite D
Albuquerque, New Mexico 87109
Contact: Nancy McDuffie
Project: Hall Environmental

Report Date: December 18, 2003

Client Sample ID: R-26 Cuttings (Radiochemistry)
Sample ID: 102538002
Matrix: Soil
Collect Date: 10-NOV-03 12:50
Receive Date: 24-NOV-03
Collector: Client

Project: HALL00103
Client ID: HALL001

Parameter	Qualifier	Result		DL	RL	Units	DF	Analyst	Date	Time	Batch	Method
Rad Alpha Spec Analysis												
Alphaspec Am241 Solid												
Americium-241	U	ND	+/-0.136	0.264	1.00	pCi/g		MLA	12/16/03	1205	296051	1
Alphaspec Pu, Solid												
Plutonium-238	U	ND	+/-2.00	0.0805	1.00	pCi/g		MLA	12/16/03	1224	296052	2
Plutonium-239/240	U	ND	+/-0.0129	0.141	1.00	pCi/g						
Alphaspec Th, Solid												
Thorium-232		1.84	+/-0.759	0.207	1.00	pCi/g		MLA	12/16/03	1158	296055	3
Alphaspec U, Solid												
Uranium-233/234		0.957	+/-0.406	0.263	1.00	pCi/g		MLA	12/16/03	1226	296053	4
Uranium-235/236	U	ND	+/-0.0803	0.236	1.00	pCi/g						
Uranium-238		0.786	+/-0.361	0.200	1.00	pCi/g						
Rad Gamma Spec Analysis												
Gammaspec, Gamma, Solid Cs137												
Cesium-137	U	ND	+/-0.029	0.0396	0.100	pCi/g		SRB	12/08/03	1914	295765	5
Rad Gas Flow Proportional Counting												
GFPC, Sr90, solid												
Strontium-90	U	ND	+/-0.241	0.502	2.00	pCi/g		JAS1	12/05/03	1710	293858	6
Rad Liquid Scintillation Analysis												
LSC, Tritium Dist, Solid												
Tritium		3.89	+/-2.22	3.42	6.00	pCi/g		CTO1	12/12/03	1043	296153	7

The following Prep Methods were performed

Method	Description	Analyst	Date	Time	Prep Batch
Ash Soil Prep	Ash Soil Prep, GL-RAD-A-021B	AWB	11/26/03	0728	293729
Dry Soil Prep	Dry Soil Prep GL-RAD-A-021	AWB	11/25/03	1249	293727

The following Analytical Methods were performed

Method	Description	Analyst Comments
1	DOE EML HASL-300, Am-05-RC Modified	
2	DOE EML HASL-300, Pu-11-RC Modified	
3	DOE EML HASL-300, Th-01-RC Modified	
4	DOE EML HASL-300, U-02-RC Modified	
5	EML HASL 300, 4.5.2.3	
6	EPA 905.0 Modified	

GENERAL ENGINEERING LABORATORIES, LLC
2040 Savage Road Charleston SC 29407 - (843) 556-8171 - www.gel.com

Certificate of Analysis

Company : Hall Environmental Analysis Labs
Address : 4901 Hawkins Ne
Suite D
Albuquerque, New Mexico 87109
Contact: Nancy McDuffie
Project: Hall Environmental

Report Date: December 18, 2003

Client Sample ID: R-26 Cuttings (Radiochemistry) Project: HALL00103
Sample ID: 102538002 Client ID: HALL001

Parameter	Qualifier	Result	DL	RL	Units	DF	AnalystDate	Time	Batch	Method
7	EPA 906.0 Modified									

Notes:
The Qualifiers in this report are defined as follows :

< Result is less than amount reported.
> Result is greater than amount reported.
B Target analyte was detected in the sample as well as the associated blank.
BD Flag for results below the MDC or a flag for low tracer recovery.
E Concentration of the target analyte exceeds the instrument calibration range.
H Analytical holding time exceeded.
J Indicates an estimated value. The result was greater than the detection limit, but less than the reporting limit.
P The response between the confirmation column and the primary column is >40%D.
U Indicates the target analyte was analyzed for but not detected above the detection limit.
UI Uncertain identification for gamma spectroscopy.
X Lab-specific qualifier-please see case narrative, data summary package or contact your project manager for details.
Y QC Samples were not spiked with this compound.
h Sample preparation or preservation holding time exceeded.

The above sample is reported on a dry weight basis except where prohibited by the analytical procedure.
Where the analytical method has been performed under NELAP certification, the analysis has met all of the requirements of the NELAC standard unless qualified on the Certificate of Analysis.

This data report has been prepared and reviewed in accordance with General Engineering Laboratories, LLC standard operating procedures. Please direct any questions to your Project Manager, Amy Jamison.

Reviewed by

GENERAL ENGINEERING LABORATORIES, LLC
2040 Savage Road Charleston, SC 29407 - (843) 556-8171 - www.gel.com

QC Summary

Report Date: December 18, 2003

Client : Hall Environmental Analysis Labs
4901 Hawkins Ne
Suite D
Albuquerque, New Mexico
Contact: Nancy McDuffie

Workorder: 102538

Parmname	NOM	Sample	Qual	QC	Units	RPD%	REC%	Range	Anlst	Date Time
HPLC-Explosives										
Batch 293844										
QC1200531987 LCS										
1,3,5-Trinitrobenzene	800			846	ug/kg		106	(57%-130%)	MAP	12/02/03 18:55
2,4,6-Trinitrotoluene	800			849	ug/kg		106	(61%-130%)		
2,4-Dinitrotoluene	800			841	ug/kg		105	(56%-127%)		
2,6-Dinitrotoluene	800			852	ug/kg		106	(57%-131%)		
2-Amino-4,6-dinitrotoluene	800			855	ug/kg		107	(57%-133%)		
4-Amino-2,6-dinitrotoluene	800			746	ug/kg		93	(57%-119%)		
HMX	800			888	ug/kg		111	(61%-138%)		
Nitrobenzene	800			784	ug/kg		98	(55%-124%)		
RDX	800			873	ug/kg		109	(62%-134%)		
Tetryl	800			701	ug/kg		88	(48%-122%)		
m-Dinitrobenzene	800			847	ug/kg		106	(78%-110%)		
m-Nitrotoluene	800			759	ug/kg		95	(55%-124%)		
o-Nitrotoluene	800			911	ug/kg		114*	(72%-109%)		
p-Nitrotoluene	800			775	ug/kg		97	(55%-126%)		
**1,2-dinitrobenzene	400			374	ug/kg		94	(76%-114%)		
QC1200531986 MB										
1,3,5-Trinitrobenzene			U	ND	ug/kg					12/02/03 18:12
2,4,6-Trinitrotoluene			U	ND	ug/kg					
2,4-Dinitrotoluene			U	ND	ug/kg					
2,6-Dinitrotoluene			U	ND	ug/kg					
2-Amino-4,6-dinitrotoluene			U	ND	ug/kg					
4-Amino-2,6-dinitrotoluene			U	ND	ug/kg					
HMX			U	ND	ug/kg					
Nitrobenzene			U	ND	ug/kg					
RDX			U	ND	ug/kg					
Tetryl			U	ND	ug/kg					
m-Dinitrobenzene			U	ND	ug/kg					
m-Nitrotoluene			U	ND	ug/kg					
o-Nitrotoluene			U	ND	ug/kg					
p-Nitrotoluene			U	ND	ug/kg					
**1,2-dinitrobenzene	400			336	ug/kg		84	(76%-114%)		
QC1200531988 102538001 MS										
1,3,5-Trinitrobenzene	800	Uh	ND	h 742	ug/kg		93	(80%-118%)		12/02/03 20:20
2,4,6-Trinitrotoluene	800	Uh	ND	h 777	ug/kg		97	(73%-133%)		
2,4-Dinitrotoluene	800	Uh	ND	h 766	ug/kg		96	(75%-118%)		
2,6-Dinitrotoluene	800	Uh	ND	h 823	ug/kg		103	(75%-130%)		
2-Amino-4,6-dinitrotoluene	800	Uh	ND	h 693	ug/kg		87	(67%-124%)		
4-Amino-2,6-dinitrotoluene	800	Uh	ND	h 387	ug/kg		48	(43%-126%)		
HMX	800	Uh	ND	h 812	ug/kg		101	(74%-131%)		
Nitrobenzene	800	Uh	ND	h 739	ug/kg		92	(72%-115%)		
RDX	800	Uh	ND	h 767	ug/kg		96	(68%-125%)		
Tetryl	800	Uh	ND	h 306	ug/kg		38*	(50%-116%)		

QC Summary

Workorder: 102538

Parmname	NOM		Sample	Qual	QC	Units	RPD%	REC%	Range	Anlst	Date Time
HPLC-Explosives											
Batch 293844											
m-Dinitrobenzene	800	Uh	ND	h	778	ug/kg		97	(80%-118%)		
m-Nitrotoluene	800	Uh	ND	h	689	ug/kg		86	(74%-115%)		
o-Nitrotoluene	800	Uh	ND	h	728	ug/kg		91	(74%-115%)		
p-Nitrotoluene	800	Uh	ND	h	705	ug/kg		88	(74%-116%)		
**1,2-dinitrobenzene	400		330		328	ug/kg		82	(76%-114%)		
QC1200531989 102538001 MSD											
1,3,5-Trinitrobenzene	800	Uh	ND	h	667	ug/kg	11	83	(0%-30%)		12/02/03 21:02
2,4,6-Trinitrotoluene	800	Uh	ND	h	735	ug/kg	6	92	(0%-30%)		
2,4-Dinitrotoluene	800	Uh	ND	h	737	ug/kg	4	92	(0%-30%)		
2,6-Dinitrotoluene	800	Uh	ND	h	780	ug/kg	5	98	(0%-30%)		
2-Amino-4,6-dinitrotoluene	800	Uh	ND	h	667	ug/kg	4	83	(0%-30%)		
4-Amino-2,6-dinitrotoluene	800	Uh	ND	h	370	ug/kg	5	46	(0%-30%)		
HMX	800	Uh	ND	h	782	ug/kg	4	98	(0%-30%)		
Nitrobenzene	800	Uh	ND	h	707	ug/kg	4	88	(0%-30%)		
RDX	800	Uh	ND	h	745	ug/kg	3	93	(0%-30%)		
Tetryl	800	Uh	ND	h	117	ug/kg	90*	15*	(0%-30%)		
m-Dinitrobenzene	800	Uh	ND	h	749	ug/kg	4	94	(0%-30%)		
m-Nitrotoluene	800	Uh	ND	h	652	ug/kg	6	82	(0%-30%)		
o-Nitrotoluene	800	Uh	ND	h	725	ug/kg	0	91	(0%-30%)		
p-Nitrotoluene	800	Uh	ND	h	673	ug/kg	5	84	(0%-30%)		
**1,2-dinitrobenzene	400		330		301	ug/kg		75*	(76%-114%)		
Metals Analysis-ICP											
Batch 293758											
QC1200531726 102538001 DUP											
Aluminum			5930000		6600000	ug/kg	11		(0%-20%)	RMJ	12/03/03 21:19
Antimony		U	ND	U	ND	ug/kg	N/A		(+/-996)		
Arsenic			2640		2780	ug/kg	5		(0%-20%)		
Barium			70500		79100	ug/kg	11		(0%-20%)		
Beryllium		J	460		525	ug/kg	N/A ^		(+/-498)		
Cadmium		U	ND	U	ND	ug/kg	N/A		(+/-498)		
Calcium			2700000		2900000	ug/kg	7		(0%-20%)		
Chromium			5660		5900	ug/kg	4		(0%-20%)		
Cobalt			2370		2610	ug/kg	10		(0%-20%)		
Copper			7720		8270	ug/kg	7		(0%-20%)		
Iron			7650000		8360000	ug/kg	9		(0%-20%)		
Lead			38000		32200	ug/kg	17		(0%-20%)		
Magnesium			776000		820000	ug/kg	6		(0%-20%)		
Manganese			295000		288000	ug/kg	2		(0%-20%)		
Nickel			5490		5470	ug/kg	0		(0%-20%)		
Potassium			515000		559000	ug/kg	8		(0%-20%)		
Selenium		J	471	J	401	ug/kg	N/A ^		(+/-498)		
Silver		U	ND	U	ND	ug/kg	N/A		(+/-498)		
Sodium			441000		444000	ug/kg	1		(0%-20%)		
Thallium		U	ND	U	ND	ug/kg	N/A		(+/-1990)		
Vanadium			9820		10300	ug/kg	5		(0%-20%)		
Zinc			27100		31000	ug/kg	13		(0%-20%)		
QC1200531730 LCS											
Aluminum	6640000				6030000	ug/kg		91	(44%-157%)		12/03/03 20:58

QC Summary

Workorder: 102538

Parmname		NOM	Sample	Qual	QC	Units	RPD%	REC%	Range	Anlst	Date Time
Metals Analysis-ICP											
Batch 293758											
Antimony		78900			32900	ug/kg		42	(1%-205%)		
Arsenic		197000			199000	ug/kg		101	(79%-121%)		
Barium		392000			388000	ug/kg		99	(80%-120%)		
Beryllium		75700			76300	ug/kg		101	(81%-119%)		
Cadmium		69100			68600	ug/kg		99	(81%-120%)		
Calcium		3380000			3620000	ug/kg		107	(76%-124%)		
Chromium		82600			78900	ug/kg		96	(77%-123%)		
Cobalt		81500			81500	ug/kg		100	(85%-115%)		
Copper		127000			127000	ug/kg		100	(80%-120%)		
Iron		12200000			10100000	ug/kg		83	(47%-153%)		
Lead		95000			95900	ug/kg		101	(77%-123%)		
Magnesium		2050000			2030000	ug/kg		99	(71%-129%)		
Manganese		452000			458000	ug/kg		101	(76%-124%)		
Nickel		85700			86500	ug/kg		101	(74%-121%)		
Potassium		1910000			1820000	ug/kg		95	(64%-136%)		
Selenium		117000			118000	ug/kg		100	(74%-126%)		
Silver		141000			164000	ug/kg		117	(45%-155%)		
Sodium		352000			303000	ug/kg		86	(51%-149%)		
Thallium		103000			104000	ug/kg		101	(71%-128%)		
Vanadium		158000			147000	ug/kg		93	(70%-129%)		
Zinc		275000			273000	ug/kg		99	(77%-123%)		
QC1200531725	MB										
Aluminum				J	1130	ug/kg					12/03/03 20:51
Antimony				U	ND	ug/kg					
Arsenic				U	ND	ug/kg					
Barium				U	ND	ug/kg					
Beryllium				U	ND	ug/kg					
Cadmium				U	ND	ug/kg					
Calcium				J	2360	ug/kg					
Chromium				U	ND	ug/kg					
Cobalt				U	ND	ug/kg					
Copper				U	ND	ug/kg					
Iron				U	ND	ug/kg					
Lead				U	ND	ug/kg					
Magnesium				U	ND	ug/kg					
Manganese				U	ND	ug/kg					
Nickel				U	ND	ug/kg					
Potassium				U	ND	ug/kg					
Selenium				U	ND	ug/kg					12/04/03 12:47
Silver				J	91.6	ug/kg					12/03/03 20:51
Sodium				U	ND	ug/kg					
Thallium				U	ND	ug/kg					
Vanadium				U	ND	ug/kg					
Zinc				J	268	ug/kg					
QC1200531728	102538001 MS										
Aluminum		251000	5930000		9090000	ug/kg		N/A	(75%-125%)		12/03/03 21:25
Antimony		25100	U ND		3820	ug/kg		15*	(75%-125%)		
Arsenic		25100	2640		25300	ug/kg		90	(75%-125%)		

QC Summary

Workorder: 102538

Parmname	NOM		Sample	Qual	QC	Units	RPD%	REC%	Range	Anlst	Date Time
Metals Analysis-ICP											
Batch 293758											
Barium	25100		70500		88600	ug/kg		72*	(75%-125%)		
Beryllium	25100	J	460		24000	ug/kg		94	(75%-125%)		
Cadmium	25100	U	ND		23100	ug/kg		92	(75%-125%)		
Calcium	251000		2700000		2350000	ug/kg		N/A	(75%-125%)		
Chromium	25100		5660		27700	ug/kg		88	(75%-125%)		
Cobalt	25100		2370		24800	ug/kg		89	(75%-125%)		
Copper	25100		7720		31100	ug/kg		93	(75%-125%)		
Iron	251000		7650000		8140000	ug/kg		N/A	(75%-125%)		
Lead	25100		38000		41000	ug/kg		12*	(75%-125%)		
Magnesium	251000		776000		1080000	ug/kg		121	(75%-125%)		
Manganese	25100		295000		281000	ug/kg		N/A	(75%-125%)		
Nickel	25100		5490		28100	ug/kg		90	(75%-125%)		
Potassium	251000		515000		826000	ug/kg		124	(75%-125%)		
Selenium	25100	J	471		21000	ug/kg		82	(75%-125%)		
Silver	25100	U	ND		22700	ug/kg		90	(75%-125%)		
Sodium	251000		441000		637000	ug/kg		78	(75%-125%)		
Thallium	25100	U	ND		21000	ug/kg		83	(75%-125%)		
Vanadium	25100		9820		32000	ug/kg		88	(75%-125%)		
Zinc	25100		27100		50500	ug/kg		93	(75%-125%)		
QC1200531729 102538001 MSD											
Aluminum	235000		5930000		8070000	ug/kg	12	N/A	(0%-20%)		12/03/03 21:31
Antimony	23500	U	ND		4830	ug/kg	24*	21*	(0%-20%)		
Arsenic	23500		2640		23800	ug/kg	6	90	(0%-20%)		
Barium	23500		70500		87200	ug/kg	2	71*	(0%-20%)		
Beryllium	23500	J	460		22400	ug/kg	7	93	(0%-20%)		
Cadmium	23500	U	ND		21600	ug/kg	7	92	(0%-20%)		
Calcium	235000		2700000		2300000	ug/kg	2	N/A	(0%-20%)		
Chromium	23500		5660		27000	ug/kg	3	91	(0%-20%)		
Cobalt	23500		2370		23200	ug/kg	7	89	(0%-20%)		
Copper	23500		7720		31200	ug/kg	0	100	(0%-20%)		
Iron	235000		7650000		8120000	ug/kg	0	N/A	(0%-20%)		
Lead	23500		38000		36100	ug/kg	13	0*	(0%-20%)		
Magnesium	235000		776000		998000	ug/kg	8	94	(0%-20%)		
Manganese	23500		295000		272000	ug/kg	4	N/A	(0%-20%)		
Nickel	23500		5490		27300	ug/kg	3	93	(0%-20%)		
Potassium	235000		515000		755000	ug/kg	9	102	(0%-20%)		
Selenium	23500	J	471		20500	ug/kg	2	85	(0%-20%)		
Silver	23500	U	ND		21400	ug/kg	6	91	(0%-20%)		
Sodium	235000		441000		588000	ug/kg	8	63*	(0%-20%)		
Thallium	23500	U	ND		20300	ug/kg	3	86	(0%-20%)		
Vanadium	23500		9820		31200	ug/kg	3	91	(0%-20%)		
Zinc	23500		27100		48100	ug/kg	5	89	(0%-20%)		
QC1200531727 102538001 SDILT											
Aluminum			57300		11600	ug/L	1.16				12/03/03 21:12
Antimony		U	ND	U	ND	ug/L	N/A				
Arsenic			25.5	J	4.30	ug/L	15.6				
Barium			681		142	ug/L	4.02				
Beryllium		J	4.44	J	0.940	ug/L	5.8				

QC Summary

Workorder: 102538

Parmname	NOM	Sample	Qual	QC	Units	RPD%	REC%	Range	Anlst	Date Time
Metals Analysis-ICP										
Batch 293758										
Cadmium		U ND	U	ND	ug/L	N/A				
Calcium		26100		5280	ug/L	1.11				
Chromium		54.6		11.5	ug/L	4.99				
Cobalt		22.9		5.25	ug/L	14.9				
Copper		74.5		15.8	ug/L	6.1				
Iron		73900		15100	ug/L	2.15				
Lead		366		77.6	ug/L	5.95				
Magnesium		7490		1530	ug/L	2.12				
Manganese		2840		594	ug/L	4.43				
Nickel		53.0		11.6	ug/L	9.84				
Potassium		4970		962	ug/L	3.26				
Selenium		J 4.55	J	3.78	ug/L	315				
Silver		U ND	U	ND	ug/L	N/A				
Sodium		4250		834	ug/L	1.99				
Thallium		U ND	U	ND	ug/L	N/A				
Vanadium		94.8		19.0	ug/L	.00844				
Zinc		262		55.2	ug/L	5.37				
Metals Analysis-Mercury										
Batch 293699										
QC1200531605 102538001 DUP										
Mercury		J 9.75	J	9.67	ug/kg	N/A ^		(+/-10.3)	NOR1	12/01/03 11:20
QC1200531608 LCS										
Mercury	9410			10400	ug/kg		111	(66%-134%)		12/01/03 11:16
QC1200531604 MB										
Mercury			U	ND	ug/kg					12/01/03 11:14
QC1200531606 102538001 MS										
Mercury	103	J 9.75		120	ug/kg		107	(75%-125%)		12/01/03 11:22
QC1200531607 102538001 MSD										
Mercury	100	J 9.75		117	ug/kg	3	107	(0%-20%)		12/01/03 11:23
Rad Alpha Spec										
Batch 296051										
QC1200537343 102538002 DUP										
Americium-241		U 0.0914 +/-0.136	U	0.0947 +/-0.129	pCi/g	4			MLA	12/16/03 12:06
QC1200537345 LCS										
Americium-241	13.3			13.2 +/-2.05	pCi/g		99			
QC1200537342 MB										
Americium-241			U	0.131 +/-0.149	pCi/g					
QC1200537344 102538002 MS										
Americium-241	13.3	U 0.0914 +/-0.136		13.1 +/-2.13	pCi/g		98			
Batch 296052										
QC1200537347 102538002 DUP										
Plutonium-238		U 0.00 +/-2.00	U	-0.0213 +/-0.0247	pCi/g	N/A		(0%-20%)	MLA	12/16/03 12:25
Plutonium-239/240		U -0.00643	U	-0.00709	pCi/g	N/A		(0%-20%)		

QC Summary

Workorder: 102538

Parmname	NOM		Sample	Qual	QC	Units	RPD%	REC%	Range	Anlst	Date Time
Rad Alpha Spec											
Batch 296052											
			+/-0.0129		+/-0.0142						
QC1200537349 LCS											
Plutonium-238					21.4 +/-2.61	pCi/g			(75%-125%)		
Plutonium-239/240	21.0			U	0.0488 +/-0.0797	pCi/g		102	(75%-125%)		
QC1200537346 MB											
Plutonium-238				U	0.0306 +/-0.105	pCi/g					
Plutonium-239/240				U	-0.0068 +/-0.0136	pCi/g					
QC1200537348 102538002 MS											
Plutonium-238		U	0.00 +/-2.00		23.0 +/-2.81	pCi/g			(75%-125%)		
Plutonium-239/240	21.0	U	-0.00643 +/-0.0129		0.308 +/-0.193	pCi/g		110	(75%-125%)		
Batch 296053											
QC1200537351 102538002 DUP											
Uranium-233/234			0.957 +/-0.406		0.823 +/-0.362	pCi/g	15		(0%-20%)	MLA	12/16/03 12:26
Uranium-235/236		U	0.0198 +/-0.0803	U	-0.00709 +/-0.0805	pCi/g	N/A		(0%-20%)		
Uranium-238			0.786 +/-0.361		0.707 +/-0.328	pCi/g	11		(0%-20%)		
QC1200537353 LCS											
Uranium-233/234					12.6 +/-2.06	pCi/g			(75%-125%)		12/16/03 12:28
Uranium-235/236					0.714 +/-0.335	pCi/g			(75%-125%)		
Uranium-238	12.1				12.9 +/-2.09	pCi/g		107	(75%-125%)		
QC1200537350 MB											
Uranium-233/234				U	0.135 +/-0.145	pCi/g					12/16/03 12:26
Uranium-235/236				U	0.019 +/-0.120	pCi/g					
Uranium-238				U	-0.0606 +/-0.0435	pCi/g					
QC1200537352 102538002 MS											
Uranium-233/234			0.957 +/-0.406		14.6 +/-2.38	pCi/g			(75%-125%)		12/16/03 12:28
Uranium-235/236		U	0.0198 +/-0.0803		0.517 +/-0.295	pCi/g			(75%-125%)		
Uranium-238	12.1		0.786 +/-0.361		14.3 +/-2.33	pCi/g		112	(75%-125%)		
Batch 296055											
QC1200537355 102538002 DUP											

QC Summary

Workorder: 102538

Parmname	NOM	Sample	Qual	QC	Units	RPD%	REC%	Range	Anlst	Date Time
Rad Alpha Spec										
Batch 296055										
Thorium-232		1.84 +/-0.759		0.917 +/-0.404	pCi/g	67*		(0%-20%)	MLA	12/16/03 11:58
QC1200537357 LCS										
Thorium-232	5.17			5.54 +/-1.79	pCi/g		107	(75%-125%)		
QC1200537354 MB										
Thorium-232			U	0.235 +/-0.403	pCi/g					
QC1200537356 102538002 MS										
Thorium-232	5.17	1.84 +/-0.759		6.25 +/-1.95	pCi/g		85	(75%-125%)		
Rad Gamma Spec										
Batch 295765										
QC1200536683 103013016 DUP										
Cesium-137		0.103 +/-0.0439	U	0.0509 +/-0.102	pCi/g	67*		(0%-20%)	SRB	12/08/03 23:38
QC1200536684 LCS										
Cesium-137	9.25			8.93 +/-0.778	pCi/g		97	(75%-125%)		12/08/03 17:42
QC1200536682 MB										
Cesium-137			U	0.0036 +/-0.0317	pCi/g					12/08/03 19:19
Rad Gas Flow										
Batch 293858										
QC1200532058 101971006 DUP										
Strontium-90		0.0849 +/-0.0273	U	0.0447 +/-0.0279	pCi/g	62*		(0%-20%)	JAS1	12/05/03 22:10
QC1200532060 LCS										
Strontium-90	3.35			3.24 +/-0.186	pCi/g		97	(75%-125%)		12/05/03 19:17
QC1200532057 MB										
Strontium-90			U	0.0134 +/-0.0251	pCi/g					12/05/03 22:10
QC1200532059 101971006 MS										
Strontium-90	6.82	0.0849 +/-0.0273		6.74 +/-0.422	pCi/g		98	(75%-125%)		12/05/03 19:17
Rad Liquid Scintillation										
Batch 296153										
QC1200537559 102913001 DUP										
Tritium	U	-2.93 +/-9.68	U	-1.46 +/-9.80	pCi/g	N/A		(0%-20%)	CTO1	12/12/03 13:48
QC1200537561 LCS										
Tritium	26.4			25.5 +/-3.13	pCi/g		97	(75%-125%)		12/12/03 14:50
QC1200537558 MB										
Tritium			U	-0.964 +/-1.54	pCi/g					12/12/03 13:17
QC1200537560 102913001 MS										

GENERAL ENGINEERING LABORATORIES, LLC
2040 Savage Road Charleston, SC 29407 - (843) 556-8171 - www.gel.com

QC Summary

Workorder: 102538

Parmname	NOM	Sample	Qual	QC	Units	RPD%	REC%	Range	Anlst	Date Time
Rad Liquid Scintillation										
Batch 296153										
Tritium	6690	-2.93 +/-9.68	U	6660 +/-810	pCi/g		100	(75%-125%)		

Notes:
The Qualifiers in this report are defined as follows:

- < Result is less than amount reported.
- > Result is greater than amount reported.
- B Target analyte was detected in the sample as well as the associated blank.
- BD Flag for results below the MDC or a flag for low tracer recovery.
- E Concentration of the target analyte exceeds the instrument calibration range.
- H Analytical holding time exceeded.
- J Indicates an estimated value. The result was greater than the detection limit, but less than the reporting limit.
- P The response between the confirmation column and the primary column is >40%D.
- U Indicates the target analyte was analyzed for but not detected above the detection limit.
- UI Uncertain identification for gamma spectroscopy.
- X Lab-specific qualifier-please see case narrative, data summary package or contact your project manager for details.
- Y QC Samples were not spiked with this compound.
- h Sample preparation or preservation holding time exceeded.

N/A indicates that spike recovery limits do not apply when sample concentration exceeds spike conc. by a factor of 4 or more.
^ The Relative Percent Difference (RPD) obtained from the sample duplicate (DUP) is evaluated against the acceptence criteria when the sample is greater than five times (5X) the contract required detection limit (RL). In cases where either the sample or duplicate value is less than 5X the RL, a control limit of +/- the RL is used to evaluate the DUP result.
For PS, PSD, and SDILT results, the values listed are the measured amounts, not final concentrations.

Where the analytical method has been performed under NELAP certification, the analysis has met all of the requirements of the NELAC standard unless qualified on the QC Summary.

CLIENT: Kleinfelder
Work Order: 0311068
Project: R-26

QC SUMMARY REPORT

Method Blank

Sample ID **MB 111003** Batch ID: **R10067** Test Code: **E300** Units: **mg/L** Analysis Date **11/10/2003 10:20:34 A** Prep Date

Client ID: Run ID: **LC_031110A** SeqNo: **225682**

Analyte	Result	PQL	SPK value	SPK Ref Val	%REC	LowLimit	HighLimit	RPD Ref Val	%RPD	RPDLimit	Qual
Fluoride	ND	0.10									
Chloride	ND	0.10									
Nitrogen, Nitrite (As N)	ND	0.10									
Bromide	ND	0.10									
Nitrogen, Nitrate (As N)	ND	0.10									
Phosphorus, Orthophosphate (As P)	ND	0.50									
Sulfate	ND	0.50									

Sample ID **mb 111003-b** Batch ID: **R10067** Test Code: **E300** Units: **mg/L** Analysis Date **11/10/2003 9:43:19 PM** Prep Date

Client ID: Run ID: **LC_031110A** SeqNo: **225721**

Analyte	Result	PQL	SPK value	SPK Ref Val	%REC	LowLimit	HighLimit	RPD Ref Val	%RPD	RPDLimit	Qual
Fluoride	ND	0.10									
Chloride	ND	0.10									
Nitrogen, Nitrite (As N)	ND	0.10									
Bromide	ND	0.10									
Nitrogen, Nitrate (As N)	ND	0.10									
Phosphorus, Orthophosphate (As P)	ND	0.50									
Sulfate	ND	0.50									

Qualifiers:
ND - Not Detected at the Reporting Limit
J - Analyte detected below quantitation limits
S - Spike Recovery outside accepted recovery limits
R - RPD outside accepted recovery limits
B - Analyte detected in the associated Method Blank

CLIENT: Kleinfelder
Work Order: 0311068
Project: R-26

QC SUMMARY REPORT
Method Blank

Sample ID **MB-4692** Batch ID: **4692** Test Code: **SW8080A** Units: **mg/Kg** Analysis Date **12/3/2003 4:28:09 AM** Prep Date **11/19/2003**
Client ID: Run ID: **ECD(17A)_031202A** SeqNo: **229821**

Analyte	Result	PQL	SPK value	SPK Ref Val	%REC	LowLimit	HighLimit	RPD Ref Val	%RPD	RPDLimit	Qual
Aroclor 1016	ND	0.050									
Aroclor 1221	ND	0.25									
Aroclor 1232	ND	0.050									
Aroclor 1242	ND	0.050									
Aroclor 1248	ND	0.050									
Aroclor 1254	ND	0.050									
Aroclor 1260	ND	0.050									
Surr: Decachlorobiphenyl	0.2338	0	0.25	0	93.5	50.1	115	0			

Sample ID **MB-4653** Batch ID: **4653** Test Code: **SW8080A** Units: **µg/L** Analysis Date **11/20/2003 8:01:27 AM** Prep Date **11/13/2003**
Client ID: Run ID: **HUGO_031119A** SeqNo: **228120**

Analyte	Result	PQL	SPK value	SPK Ref Val	%REC	LowLimit	HighLimit	RPD Ref Val	%RPD	RPDLimit	Qual
Aroclor 1016	ND	1.0									
Aroclor 1221	ND	5.0									
Aroclor 1232	ND	1.0									
Aroclor 1242	ND	1.0									
Aroclor 1248	ND	1.0									
Aroclor 1254	ND	1.0									
Aroclor 1260	ND	1.0									
Surr: Decachlorobiphenyl	4.62	0	5	0	92.4	76	111	0			
Surr: Tetrachloro-m-xylene	3.75	0	5	0	75.0	47	94	0			

Qualifiers:
ND - Not Detected at the Reporting Limit
J - Analyte detected below quantitation limits
S - Spike Recovery outside accepted recovery limits
R - RPD outside accepted recovery limits
B - Analyte detected in the associated Method Blank

CLIENT: Kleinfelder
Work Order: 0311068
Project: R-26

QC SUMMARY REPORT
Method Blank

Sample ID mb-4691 Batch ID: 4691 Test Code: SW8270A Units: mg/Kg Analysis Date 11/21/2003 Prep Date 11/19/2003
Client ID: Run ID: ELMO_031121A SeqNo: 228469

Analyte	Result	PQL	SPK value	SPK Ref Val	%REC	LowLimit	HighLimit	RPD Ref Val	%RPD	RPDLimit	Qual
Acenaphthene	ND	0.20									
Acenaphthylene	ND	0.20									
Aniline	ND	0.20									
Anthracene	ND	0.20									
Azobenzene	ND	0.20									
Benz(a)anthracene	ND	0.20									
Benzidine	ND	0.20									
Benzo(a)pyrene	ND	0.20									
Benzo(b)fluoranthene	ND	0.20									
Benzo(g,h,i)perylene	ND	0.20									
Benzo(k)fluoranthene	ND	0.20									
Benzoic acid	ND	0.50									
Benzyl alcohol	ND	0.20									
Bis(2-chloroethoxy)methane	ND	0.20									
Bis(2-chloroethyl)ether	ND	0.20									
Bis(2-chloroisopropyl)ether	ND	0.20									
Bis(2-ethylhexyl)phthalate	ND	0.20									
4-Bromophenyl phenyl ether	ND	0.20									
Butyl benzyl phthalate	0.0565	0.20									J
Carbazole	ND	0.20									
4-Chloro-3-methylphenol	ND	0.20									
4-Chloroaniline	ND	0.20									
2-Chloronaphthalene	ND	0.20									
2-Chlorophenol	ND	0.20									
4-Chlorophenyl phenyl ether	ND	0.20									
Chrysene	ND	0.20									
Di-n-butyl phthalate	0.356	0.20									
Di-n-octyl phthalate	ND	0.20									

Qualifiers:
ND - Not Detected at the Reporting Limit
J - Analyte detected below quantitation limits
S - Spike Recovery outside accepted recovery limits
R - RPD outside accepted recovery limits
B - Analyte detected in the associated Method Blank

CLIENT: Kleinfelder
Work Order: 0311068
Project: R-26

QC SUMMARY REPORT
Method Blank

Dibenz(a,h)anthracene	0.0995	0.20	J
Dibenzofuran	ND	0.20	
1,2-Dichlorobenzene	ND	0.20	
1,3-Dichlorobenzene	ND	0.20	
1,4-Dichlorobenzene	ND	0.20	
3,3'-Dichlorobenzidine	0.09	0.20	J
Diethyl phthalate	ND	0.20	
Dimethyl phthalate	ND	0.20	
2,4-Dichlorophenol	ND	0.20	
2,4-Dimethylphenol	ND	0.20	
4,6-Dinitro-2-methylphenol	ND	0.50	
2,4-Dinitrophenol	ND	0.50	
2,4-Dinitrotoluene	ND	0.20	
2,6-Dinitrotoluene	ND	0.20	
Fluoranthene	ND	0.20	
Fluorene	ND	0.20	
Hexachlorobenzene	ND	0.20	
Hexachlorobutadiene	ND	0.20	
Hexachlorocyclopentadiene	ND	0.20	
Hexachloroethane	ND	0.20	
Indeno(1,2,3-cd)pyrene	0.0695	0.20	J
Isophorone	ND	0.20	
2-Methylnaphthalene	ND	0.20	
2-Methylphenol	ND	0.20	
3+4-Methylphenol	ND	0.20	
N-Nitrosodi-n-propylamine	ND	0.20	
N-Nitrosodiphenylamine	ND	0.20	
Naphthalene	ND	0.20	
2-Nitroaniline	ND	0.50	
3-Nitroaniline	ND	0.50	
4-Nitroaniline	ND	0.20	
Nitrobenzene	ND	0.20	
2-Nitrophenol	ND	0.20	

Qualifiers:
ND - Not Detected at the Reporting Limit
J - Analyte detected below quantitation limits
S - Spike Recovery outside accepted recovery limits
R - RPD outside accepted recovery limits
B - Analyte detected in the associated Method Blank

CLIENT: Kleinfelder
Work Order: 0311068
Project: R-26

QC SUMMARY REPORT
Method Blank

4-Nitrophenol	0.1655	0.20							J
Pentachlorophenol	0.1685	0.50							J
Phenanthrene	ND	0.20							
Phenol	ND	0.20							
Pyrene	ND	0.20							
Pyridine	ND	0.50							
1,2,4-Trichlorobenzene	ND	0.20							
2,4,5-Trichlorophenol	ND	0.20							
2,4,6-Trichlorophenol	ND	0.20							
Surr: 2,4,6-Tribromophenol	4.182	0	5	0	83.6	26	156	0	
Surr: 2-Fluorobiphenyl	2.244	0	2.5	0	89.7	23.6	111	0	
Surr: 2-Fluorophenol	4.26	0	5	0	85.2	21.5	107	0	
Surr: 4-Terphenyl-d14	2.482	0	2.5	0	99.3	30	120	0	
Surr: Nitrobenzene-d5	2.035	0	2.5	0	81.4	25.3	115	0	
Surr: Phenol-d6	5.002	0	5	0	100	25.2	115	0	

Qualifiers:
ND - Not Detected at the Reporting Limit
J - Analyte detected below quantitation limits
S - Spike Recovery outside accepted recovery limits
R - RPD outside accepted recovery limits
B - Analyte detected in the associated Method Blank

CLIENT: Kleinfelder
Work Order: 0311068
Project: R-26

QC SUMMARY REPORT
Method Blank

Sample ID **mb-4645** Batch ID: **4645** Test Code: **SW8270A** Units: **µg/L** Analysis Date **11/14/2003** Prep Date **11/12/2003**
Client ID: Run ID: **ELMO_031114A** SeqNo: **226987**

Analyte	Result	PQL	SPK value	SPK Ref Val	%REC	LowLimit	HighLimit	RPD Ref Val	%RPD	RPDLimit	Qual
Acenaphthene	ND	10									
Acenaphthylene	ND	10									
Aniline	ND	10									
Anthracene	ND	10									
Azobenzene	ND	10									
Benz(a)anthracene	ND	10									
Benzidine	ND	20									
Benzo(a)pyrene	ND	10									
Benzo(b)fluoranthene	ND	10									
Benzo(g,h,i)perylene	ND	10									
Benzo(k)fluoranthene	ND	10									
Benzoic acid	ND	50									
Benzyl alcohol	ND	20									
Bis(2-chloroethoxy)methane	ND	10									
Bis(2-chloroethyl)ether	ND	10									
Bis(2-chloroisopropyl)ether	ND	10									
Bis(2-ethylhexyl)phthalate	ND	10									
4-Bromophenyl phenyl ether	ND	10									
Butyl benzyl phthalate	ND	10									
Carbazole	ND	10									
4-Chloro-3-methylphenol	ND	20									
4-Chloroaniline	ND	20									
2-Chloronaphthalene	ND	10									
2-Chlorophenol	ND	10									
4-Chlorophenyl phenyl ether	ND	10									
Chrysene	ND	10									
Di-n-butyl phthalate	ND	10									
Di-n-octyl phthalate	ND	10									

Qualifiers:
ND - Not Detected at the Reporting Limit
J - Analyte detected below quantitation limits
S - Spike Recovery outside accepted recovery limits
R - RPD outside accepted recovery limits
B - Analyte detected in the associated Method Blank

Dibenz(a,h)anthracene	ND	10
Dibenzofuran	ND	10
1,2-Dichlorobenzene	ND	10
1,3-Dichlorobenzene	ND	10
1,4-Dichlorobenzene	ND	10
3,3'-Dichlorobenzidine	ND	10
Diethyl phthalate	ND	10
Dimethyl phthalate	ND	10
2,4-Dichlorophenol	ND	10
2,4-Dimethylphenol	ND	10
4,6-Dinitro-2-methylphenol	ND	50
2,4-Dinitrophenol	ND	50
2,4-Dinitrotoluene	ND	10
2,6-Dinitrotoluene	ND	10
Fluoranthene	ND	10
Fluorene	ND	10
Hexachlorobenzene	ND	10
Hexachlorobutadiene	ND	10
Hexachlorocyclopentadiene	ND	10
Hexachloroethane	ND	10
Indeno(1,2,3-cd)pyrene	ND	10
Isophorone	ND	10
2-Methylnaphthalene	ND	10
2-Methylphenol	ND	10
3+4-Methylphenol	ND	10
N-Nitrosodi-n-propylamine	ND	10
N-Nitrosodiphenylamine	ND	10
Naphthalene	ND	10
2-Nitroaniline	ND	50
3-Nitroaniline	ND	50
4-Nitroaniline	ND	20
Nitrobenzene	ND	10
2-Nitrophenol	ND	10

CLIENT: Kleinfelder
Work Order: 0311068
Project: R-26

QC SUMMARY REPORT
Method Blank

4-Nitrophenol	ND	50							
Pentachlorophenol	ND	50							
Phenanthrene	ND	10							
Phenol	ND	10							
Pyrene	ND	10							
Pyridine	ND	10							
1,2,4-Trichlorobenzene	ND	10							
2,4,5-Trichlorophenol	ND	10							
2,4,6-Trichlorophenol	ND	10							
Surr: 2,4,6-Tribromophenol	129.8	0	200	0	64.9	16.6	115	0	
Surr: 2-Fluorobiphenyl	70.93	0	100	0	70.9	37	95.7	0	
Surr: 2-Fluorophenol	114.3	0	200	0	57.2	9.54	89.8	0	
Surr: 4-Terphenyl-d14	82.02	0	100	0	82.0	70	130	0	
Surr: Nitrobenzene-d5	74.43	0	100	0	74.4	38	106	0	
Surr: Phenol-d6	87.73	0	200	0	43.9	10.7	63.4	0	

Sample ID **MB-4705** Batch ID: **4705** Test Code: **SW7470** Units: **mg/L** Analysis Date **11/21/2003** Prep Date **11/21/2003**
Client ID: Run ID: **MI-LA254_031121B** SeqNo: **228479**

Analyte	Result	PQL	SPK value	SPK Ref Val	%REC	LowLimit	HighLimit	RPD Ref Val	%RPD	RPDLimit	Qual
Mercury	ND	0.020									

Sample ID **MB-4697** Batch ID: **4697** Test Code: **SW1311/6010** Units: **mg/L** Analysis Date **11/21/2003 10:49:05 A** Prep Date **11/20/2003**
Client ID: Run ID: **ICP_031121A** SeqNo: **228323**

Analyte	Result	PQL	SPK value	SPK Ref Val	%REC	LowLimit	HighLimit	RPD Ref Val	%RPD	RPDLimit	Qual
Arsenic	ND	5.0									
Barium	ND	100									
Cadmium	ND	1.0									
Chromium	ND	5.0									
Lead	ND	5.0									
Selenium	ND	1.0									
Silver	0.007017	5.0									J

Qualifiers: ND - Not Detected at the Reporting Limit; S - Spike Recovery outside accepted recovery limits; B - Analyte detected in the associated Method Blank
J - Analyte detected below quantitation limits; R - RPD outside accepted recovery limits

Hall Environmental Analysis Laboratory

Date: *22-Dec-03*

CLIENT: Kleinfelder
Work Order: 0311068
Project: R-26

QC SUMMARY REPORT
Method Blank

Sample ID **mb 4644** Batch ID: **4644** Test Code: **SW8260B** Units: **mg/Kg** Analysis Date **11/13/2003** Prep Date **11/12/2003**

Client ID: Run ID: **VAL_031113B** SeqNo: **226703**

Analyte	Result	PQL	SPK value	SPK Ref Val	%REC	LowLimit	HighLimit	RPD Ref Val	%RPD	RPDLimit	Qual
Benzene	ND	0.050									
Toluene	ND	0.050									
Ethylbenzene	ND	0.050									
Methyl tert-butyl ether (MTBE)	ND	0.050									
1,2,4-Trimethylbenzene	ND	0.050									
1,3,5-Trimethylbenzene	ND	0.050									
1,2-Dichloroethane (EDC)	ND	0.050									
1,2-Dibromoethane (EDB)	ND	0.050									
Naphthalene	ND	0.10									
1-Methylnaphthalene	ND	0.20									
2-Methylnaphthalene	ND	0.20									
Acetone	ND	0.50									
Bromobenzene	ND	0.050									
Bromochloromethane	ND	0.050									
Bromodichloromethane	ND	0.050									
Bromoform	ND	0.050									
Bromomethane	ND	0.10									
2-Butanone	ND	0.50									
Carbon disulfide	ND	0.50									
Carbon tetrachloride	ND	0.050									
Chlorobenzene	ND	0.050									
Chloroethane	ND	0.10									
Chloroform	ND	0.050									
Chloromethane	ND	0.050									
2-Chlorotoluene	ND	0.050									
4-Chlorotoluene	ND	0.050									
cis-1,2-DCE	ND	0.050									

Qualifiers:
ND - Not Detected at the Reporting Limit
J - Analyte detected below quantitation limits
S - Spike Recovery outside accepted recovery limits
R - RPD outside accepted recovery limits
B - Analyte detected in the associated Method Blank

1

CLIENT: Kleinfelder
Work Order: 0311068
Project: R-26

QC SUMMARY REPORT
Method Blank

cis-1,3-Dichloropropene	ND	0.050	
1,2-Dibromo-3-chloropropane	ND	0.10	
Dibromochloromethane	ND	0.050	
Dibromomethane	ND	0.10	
1,2-Dichlorobenzene	ND	0.050	
1,3-Dichlorobenzene	ND	0.050	
1,4-Dichlorobenzene	ND	0.050	
Dichlorodifluoromethane	ND	0.050	
1,1-Dichloroethane	ND	0.050	
1,1-Dichloroethene	ND	0.050	
1,2-Dichloropropane	ND	0.050	
1,3-Dichloropropane	ND	0.050	
2,2-Dichloropropane	ND	0.050	
1,1-Dichloropropene	ND	0.050	
Hexachlorobutadiene	ND	0.050	
2-Hexanone	ND	0.50	
Isopropylbenzene	ND	0.050	
4-Isopropyltoluene	ND	0.050	
4-Methyl-2-pentanone	ND	0.50	
Methylene chloride	0.0297	0.15	J
n-Butylbenzene	ND	0.050	
n-Propylbenzene	ND	0.050	
sec-Butylbenzene	ND	0.050	
Styrene	ND	0.050	
tert-Butylbenzene	ND	0.050	
1,1,1,2-Tetrachloroethane	ND	0.050	
1,1,2,2-Tetrachloroethane	ND	0.050	
Tetrachloroethene (PCE)	ND	0.050	
trans-1,2-DCE	ND	0.050	
trans-1,3-Dichloropropene	ND	0.050	
1,2,3-Trichlorobenzene	ND	0.050	
1,2,4-Trichlorobenzene	ND	0.050	
1,1,1-Trichloroethane	ND	0.050	

Qualifiers:
ND - Not Detected at the Reporting Limit
J - Analyte detected below quantitation limits
S - Spike Recovery outside accepted recovery limits
R - RPD outside accepted recovery limits
B - Analyte detected in the associated Method Blank

CLIENT: Kleinfelder
Work Order: 0311068
Project: R-26

QC SUMMARY REPORT
Method Blank

1,1,2-Trichloroethane	ND	0.050						
Trichloroethene (TCE)	ND	0.050						
Trichlorofluoromethane	ND	0.050						
1,2,3-Trichloropropane	ND	0.10						
Vinyl chloride	ND	0.10						
Xylenes, Total	ND	0.050						
Surr: 1,2-Dichloroethane-d4	0.5274	0	0.5	0	105	68.4	123	0
Surr: 4-Bromofluorobenzene	0.484	0	0.5	0	96.8	70	119	0
Surr: Dibromofluoromethane	0.5129	0	0.5	0	103	76.8	123	0
Surr: Toluene-d8	0.5185	0	0.5	0	104	85.2	123	0

Qualifiers:
ND - Not Detected at the Reporting Limit
J - Analyte detected below quantitation limits
S - Spike Recovery outside accepted recovery limits
R - RPD outside accepted recovery limits
B - Analyte detected in the associated Method Blank

CLIENT: Kleinfelder
Work Order: 0311068
Project: R-26

QC SUMMARY REPORT
Method Blank

Sample ID 5ml rb | Batch ID: R10078 | Test Code: SW8260B | Units: µg/L | Analysis Date 11/11/2003 | Prep Date
Client ID: | Run ID: NEPTUNE_031111A | SeqNo: 226011

Analyte	Result	PQL	SPK value	SPK Ref Val	%REC	LowLimit	HighLimit	RPD Ref Val	%RPD	RPDLimit	Qual
Benzene	ND	1.0									
Toluene	ND	1.0									
Ethylbenzene	ND	1.0									
Methyl tert-butyl ether (MTBE)	ND	1.0									
1,2,4-Trimethylbenzene	ND	1.0									
1,3,5-Trimethylbenzene	ND	1.0									
1,2-Dichloroethane (EDC)	ND	1.0									
1,2-Dibromoethane (EDB)	ND	1.0									
Naphthalene	ND	2.0									
1-Methylnaphthalene	ND	4.0									
2-Methylnaphthalene	ND	4.0									
Acetone	ND	10									
Bromobenzene	ND	1.0									
Bromochloromethane	ND	1.0									
Bromodichloromethane	ND	1.0									
Bromoform	ND	1.0									
Bromomethane	ND	2.0									
2-Butanone	ND	10									
Carbon disulfide	ND	10									
Carbon Tetrachloride	ND	1.0									
Chlorobenzene	ND	1.0									
Chloroethane	ND	2.0									
Chloroform	ND	1.0									
Chloromethane	ND	1.0									
2-Chlorotoluene	ND	1.0									
4-Chlorotoluene	ND	1.0									
cis-1,2-DCE	ND	1.0									
cis-1,3-Dichloropropene	ND	1.0									

Qualifiers:
ND - Not Detected at the Reporting Limit
J - Analyte detected below quantitation limits
S - Spike Recovery outside accepted recovery limits
R - RPD outside accepted recovery limits
B - Analyte detected in the associated Method Blank

CLIENT: Kleinfelder
Work Order: 0311068
Project: R-26

QC SUMMARY REPORT
Method Blank

1,2-Dibromo-3-chloropropane	ND	2.0
Dibromochloromethane	ND	1.0
Dibromomethane	ND	2.0
1,2-Dichlorobenzene	ND	1.0
1,3-Dichlorobenzene	ND	1.0
1,4-Dichlorobenzene	ND	1.0
Dichlorodifluoromethane	ND	1.0
1,1-Dichloroethane	ND	1.0
1,1-Dichloroethene	ND	1.0
1,2-Dichloropropane	ND	1.0
1,3-Dichloropropane	ND	1.0
2,2-Dichloropropane	ND	1.0
1,1-Dichloropropene	ND	1.0
Hexachlorobutadiene	ND	1.0
2-Hexanone	ND	10
Isopropylbenzene	ND	1.0
4-Isopropyltoluene	ND	1.0
4-Methyl-2-pentanone	ND	10
Methylene Chloride	ND	3.0
n-Butylbenzene	ND	1.0
n-Propylbenzene	ND	1.0
sec-Butylbenzene	ND	1.0
Styrene	ND	1.0
tert-Butylbenzene	ND	1.0
1,1,1,2-Tetrachloroethane	ND	1.0
1,1,2,2-Tetrachloroethane	ND	1.0
Tetrachloroethene (PCE)	ND	1.0
trans-1,2-DCE	ND	1.0
trans-1,3-Dichloropropene	ND	1.0
1,2,3-Trichlorobenzene	ND	1.0
1,2,4-Trichlorobenzene	ND	1.0
1,1,1-Trichloroethane	ND	1.0
1,1,2-Trichloroethane	ND	1.0

Qualifiers:
ND - Not Detected at the Reporting Limit
J - Analyte detected below quantitation limits
S - Spike Recovery outside accepted recovery limits
R - RPD outside accepted recovery limits
B - Analyte detected in the associated Method Blank

CLIENT: Kleinfelder
Work Order: 0311068
Project: R-26

QC SUMMARY REPORT
Method Blank

Trichloroethene (TCE)	ND	1.0						
Trichlorofluoromethane	ND	1.0						
1,2,3-Trichloropropane	ND	2.0						
Vinyl chloride	ND	2.0						
Xylenes, Total	ND	1.0						
Surr: 1,2-Dichloroethane-d4	9.736	0	10	0	97.4	68.4	127	0
Surr: 4-Bromofluorobenzene	9.142	0	10	0	91.4	70.4	126	0
Surr: Dibromofluoromethane	9.65	0	10	0	96.5	70.2	126	0
Surr: Toluene-d8	10.44	0	10	0	104	73.5	129	0

Qualifiers:
ND - Not Detected at the Reporting Limit
J - Analyte detected below quantitation limits
S - Spike Recovery outside accepted recovery limits
R - RPD outside accepted recovery limits
B - Analyte detected in the associated Method Blank

CLIENT: Kleinfelder
Work Order: 0311068
Project: R-26

QC SUMMARY REPORT

Sample Duplicate

Sample ID **0311068-03A DUP** Batch ID: **4697** Test Code: **SW1311/6010** Units: **mg/L** Analysis Date **11/21/2003 11:17:05 A** Prep Date **11/20/2003**

Client ID: **R-26 cuttings** Run ID: **ICP_031121A** SeqNo: **228332**

Analyte	Result	PQL	SPK value	SPK Ref Val	%REC	LowLimit	HighLimit	RPD Ref Val	%RPD	RPDLimit	Qual
Arsenic	ND	5.0	0	0	0	0	0	0	0	30	
Barium	1.039	100	0	0	0	0	0	1.01	0	30	J
Cadmium	ND	1.0	0	0	0	0	0	0	0	30	
Chromium	0.007411	5.0	0	0	0	0	0	0.006618	0	30	J
Lead	0.05754	5.0	0	0	0	0	0	0.05466	0	30	J
Selenium	0.0548	1.0	0	0	0	0	0	0.05225	0	30	J
Silver	ND	5.0	0	0	0	0	0	0	0	30	

Qualifiers:
ND - Not Detected at the Reporting Limit
J - Analyte detected below quantitation limits
S - Spike Recovery outside accepted recovery limits
R - RPD outside accepted recovery limits
B - Analyte detected in the associated Method Blank

Hall Environmental Analysis Laboratory

Date: *22-Dec-03*

CLIENT: Kleinfelder
Work Order: 0311068
Project: R-26

QC SUMMARY REPORT

Sample Matrix Spike

Sample ID **0311068-03A MS** Batch ID: **4697** Test Code: **SW1311/6010** Units: **mg/L** Analysis Date **11/21/2003 11:19:26 A** Prep Date **11/20/2003**

Client ID: **R-26 cuttings** Run ID: **ICP_031121A** SeqNo: **228333**

Analyte	Result	PQL	SPK value	SPK Ref Val	%REC	LowLimit	HighLimit	RPD Ref Val	%RPD	RPDLimit	Qual
Arsenic	0.5	5.0	0.5	0	100	75	125	0			
Barium	1.481	100	0.5	1.01	94.2	75	125	0			
Cadmium	0.4867	1.0	0.5	0	97.3	75	125	0			
Chromium	0.4807	5.0	0.5	0.006618	94.8	75	125	0			
Lead	0.4881	5.0	0.5	0.05466	86.7	75	125	0			
Selenium	0.5332	1.0	0.5	0.05225	96.2	75	125	0			
Silver	0.4967	5.0	0.5	0	99.3	75	125	0			

Qualifiers:
ND - Not Detected at the Reporting Limit
J - Analyte detected below quantitation limits
S - Spike Recovery outside accepted recovery limits
R - RPD outside accepted recovery limits
B - Analyte detected in the associated Method Blank

Hall Environmental Analysis Laboratory

Date: *22-Dec-03*

CLIENT: Kleinfelder
Work Order: 0311068
Project: R-26

QC SUMMARY REPORT

Laboratory Control Spike - generic

Sample ID **LCS 111003** Batch ID: **R10067** Test Code: **E300** Units: **mg/L** Analysis Date **11/10/2003 10:37:18 A** Prep Date

Client ID: Run ID: **LC_031110A** SeqNo: **225683**

Analyte	Result	PQL	SPK value	SPK Ref Val	%REC	LowLimit	HighLimit	RPD Ref Val	%RPD	RPDLimit	Qual
Fluoride	0.5265	0.10	0.5	0	105	90	110	0			
Chloride	5.228	0.10	5	0	105	90	110	0			
Nitrogen, Nitrite (As N)	1.008	0.10	1	0	101	90	110	0			
Bromide	2.628	0.10	2.5	0	105	90	110	0			
Nitrogen, Nitrate (As N)	2.532	0.10	2.5	0	101	90	110	0			
Phosphorus, Orthophosphate (As P)	4.952	0.50	5	0	99.0	90	110	0			
Sulfate	9.737	0.50	10	0	97.4	90	110	0			

Sample ID **lcs 111003-b** Batch ID: **R10067** Test Code: **E300** Units: **mg/L** Analysis Date **11/10/2003 10:00:03 P** Prep Date

Client ID: Run ID: **LC_031110A** SeqNo: **225722**

Analyte	Result	PQL	SPK value	SPK Ref Val	%REC	LowLimit	HighLimit	RPD Ref Val	%RPD	RPDLimit	Qual
Fluoride	0.5492	0.10	0.5	0	110	90	110	0			
Chloride	5.211	0.10	5	0	104	90	110	0			
Nitrogen, Nitrite (As N)	0.9495	0.10	1	0	95.0	90	110	0			
Bromide	2.33	0.10	2.5	0	93.2	90	110	0			
Nitrogen, Nitrate (As N)	2.451	0.10	2.5	0	98.1	90	110	0			
Phosphorus, Orthophosphate (As P)	4.854	0.50	5	0	97.1	90	110	0			
Sulfate	9.596	0.50	10	0	96.0	90	110	0			

Sample ID **LCS-4692** Batch ID: **4692** Test Code: **SW8080A** Units: **mg/Kg** Analysis Date **12/3/2003 5:13:07 AM** Prep Date **11/19/2003**

Client ID: Run ID: **ECD(17A)_031202A** SeqNo: **229823**

Analyte	Result	PQL	SPK value	SPK Ref Val	%REC	LowLimit	HighLimit	RPD Ref Val	%RPD	RPDLimit	Qual
Aroclor 1016	0.222	0.050	0.25	0	88.8	70	130	0			
Aroclor 1260	0.2333	0.050	0.25	0	93.3	67	137	0			

Qualifiers: ND - Not Detected at the Reporting Limit; S - Spike Recovery outside accepted recovery limits; B - Analyte detected in the associated Method Blank; J - Analyte detected below quantitation limits; R - RPD outside accepted recovery limits

1

CLIENT: Kleinfelder
Work Order: 0311068
Project: R-26

QC SUMMARY REPORT
Laboratory Control Spike Duplicate

Sample ID **LCSD-4692** Batch ID: **4692** Test Code: **SW8080A** Units: **mg/Kg** Analysis Date **12/3/2003 5:59:31 AM** Prep Date **11/19/2003**
Client ID: Run ID: **ECD(17A)_031202A** SeqNo: **229825**

Analyte	Result	PQL	SPK value	SPK Ref Val	%REC	LowLimit	HighLimit	RPD Ref Val	%RPD	RPDLimit	Qual
Aroclor 1016	0.2367	0.050	0.25	0	94.7	70	130	0.222	6.39	0	
Aroclor 1260	0.2325	0.050	0.25	0	93.0	67	137	0.2333	0.365	20	

Sample ID **LCS-4653** Batch ID: **4653** Test Code: **SW8080A** Units: **µg/L** Analysis Date **11/20/2003 8:47:36 AM** Prep Date **11/13/2003**
Client ID: Run ID: **HUGO_031119A** SeqNo: **228121**

Analyte	Result	PQL	SPK value	SPK Ref Val	%REC	LowLimit	HighLimit	RPD Ref Val	%RPD	RPDLimit	Qual
Aroclor 1016	3.506	1.0	5	0	70.1	27.4	132	0			
Aroclor 1260	4.612	1.0	5	0	92.2	52.1	148	0			

Sample ID **LCSD-4653** Batch ID: **4653** Test Code: **SW8080A** Units: **µg/L** Analysis Date **11/20/2003 9:33:47 AM** Prep Date **11/13/2003**
Client ID: Run ID: **HUGO_031119A** SeqNo: **228122**

Analyte	Result	PQL	SPK value	SPK Ref Val	%REC	LowLimit	HighLimit	RPD Ref Val	%RPD	RPDLimit	Qual
Aroclor 1016	3.88	1.0	5	0	77.6	27.4	132	3.506	10.1	45.7	
Aroclor 1260	4.642	1.0	5	0	92.8	52.1	148	4.612	0.648	30	

Sample ID **100ng lcs** Batch ID: **R10078** Test Code: **SW8260B** Units: **µg/L** Analysis Date **11/11/2003** Prep Date
Client ID: Run ID: **NEPTUNE_031111A** SeqNo: **226012**

Analyte	Result	PQL	SPK value	SPK Ref Val	%REC	LowLimit	HighLimit	RPD Ref Val	%RPD	RPDLimit	Qual
Benzene	19.53	1.0	20	0	97.7	71.2	122	0			
Toluene	19.8	1.0	20	0	99.0	87.7	122	0			
Chlorobenzene	19.53	1.0	20	0	97.7	85.6	136	0			
1,1-Dichloroethene	18.65	1.0	20	0	93.2	70.7	117	0			
Trichloroethene (TCE)	20.26	1.0	20	0	101	76.9	130	0			

Qualifiers:
ND - Not Detected at the Reporting Limit
J - Analyte detected below quantitation limits
S - Spike Recovery outside accepted recovery limits
R - RPD outside accepted recovery limits
B - Analyte detected in the associated Method Blank

CLIENT: Kleinfelder
Work Order: 0311068
Project: R-26

QC SUMMARY REPORT

Laboratory Control Spike - generic

Sample ID **lcs-4691** Batch ID: **4691** Test Code: **SW8270A** Units: **mg/Kg** Analysis Date **11/21/2003** Prep Date **11/19/2003**
Client ID: Run ID: **ELMO_031121A** SeqNo: **228470**

Analyte	Result	PQL	SPK value	SPK Ref Val	%REC	LowLimit	HighLimit	RPD Ref Val	%RPD	RPDLimit	Qual
Acenaphthene	1.986	0.20	2.5	0	79.4	45	110	0			
4-Chloro-3-methylphenol	4.057	0.20	5	0	81.1	45	110	0			
2-Chlorophenol	3.944	0.20	5	0	78.9	45	110	0			
1,4-Dichlorobenzene	1.925	0.20	2.5	0	77.0	45	110	0			
2,4-Dinitrotoluene	2.118	0.20	2.5	0	84.7	45	110	0			
N-Nitrosodi-n-propylamine	1.818	0.20	2.5	0	72.7	45	110	0			
4-Nitrophenol	4.271	0.20	5	0.1655	82.1	45	110	0			
Pentachlorophenol	4.363	0.50	5	0.1685	83.9	45	110	0			
Phenol	3.909	0.20	5	0	78.2	45	110	0			
Pyrene	2.155	0.20	2.5	0	86.2	45	110	0			
1,2,4-Trichlorobenzene	1.892	0.20	2.5	0	75.7	45	110	0			

Sample ID **lcsd-4691** Batch ID: **4691** Test Code: **SW8270A** Units: **mg/Kg** Analysis Date **11/21/2003** Prep Date **11/19/2003**
Client ID: Run ID: **ELMO_031121A** SeqNo: **228471**

Analyte	Result	PQL	SPK value	SPK Ref Val	%REC	LowLimit	HighLimit	RPD Ref Val	%RPD	RPDLimit	Qual
Acenaphthene	1.903	0.20	2.5	0	76.1	45	110	1.986	4.29	25	
4-Chloro-3-methylphenol	3.868	0.20	5	0	77.4	45	110	4.057	4.78	25	
2-Chlorophenol	3.98	0.20	5	0	79.6	45	110	3.944	0.909	25	
1,4-Dichlorobenzene	1.814	0.20	2.5	0	72.6	45	110	1.925	5.91	25	
2,4-Dinitrotoluene	2.017	0.20	2.5	0	80.7	45	110	2.118	4.89	25	
N-Nitrosodi-n-propylamine	1.904	0.20	2.5	0	76.2	45	110	1.818	4.62	25	
4-Nitrophenol	4.368	0.20	5	0.1655	84.1	45	110	4.271	2.25	25	
Pentachlorophenol	4.177	0.50	5	0.1685	80.2	45	110	4.363	4.36	25	
Phenol	3.738	0.20	5	0	74.8	45	110	3.909	4.47	25	
Pyrene	2.068	0.20	2.5	0	82.7	45	110	2.155	4.12	25	
1,2,4-Trichlorobenzene	1.933	0.20	2.5	0	77.3	45	110	1.892	2.12	25	

Qualifiers: ND - Not Detected at the Reporting Limit; J - Analyte detected below quantitation limits; S - Spike Recovery outside accepted recovery limits; R - RPD outside accepted recovery limits; B - Analyte detected in the associated Method Blank

CLIENT: Kleinfelder
Work Order: 0311068
Project: R-26

QC SUMMARY REPORT
Laboratory Control Spike - generic

Sample ID **lcs-4645** Batch ID: **4645** Test Code: **SW8270A** Units: **µg/L** Analysis Date **11/14/2003** Prep Date **11/12/2003**
Client ID: Run ID: **ELMO_031114A** SeqNo: **226988**

Analyte	Result	PQL	SPK value	SPK Ref Val	%REC	LowLimit	HighLimit	RPD Ref Val	%RPD	RPDLimit	Qual
Acenaphthene	62.17	10	100	0	62.2	43.1	89.9	0			
4-Chloro-3-methylphenol	139.5	20	200	0	69.8	44.1	93.2	0			
2-Chlorophenol	136.9	10	200	0	68.5	20.7	98	0			
1,4-Dichlorobenzene	56.35	10	100	0	56.4	24.1	90.7	0			
2,4-Dinitrotoluene	72.5	10	100	0	72.5	43.2	101	0			
N-Nitrosodi-n-propylamine	63.65	10	100	0	63.6	44.6	99.9	0			
4-Nitrophenol	75.44	50	200	0	37.7	11	57.5	0			
Pentachlorophenol	143.5	50	200	0	71.7	8.65	105	0			
Phenol	73.65	10	200	0	36.8	21.1	55.3	0			
Pyrene	77.63	10	100	0	77.6	35.7	111	0			
1,2,4-Trichlorobenzene	56.94	10	100	0	56.9	30.2	89.6	0			

Sample ID **lcsd-4645** Batch ID: **4645** Test Code: **SW8270A** Units: **µg/L** Analysis Date **11/14/2003** Prep Date **11/12/2003**
Client ID: Run ID: **ELMO_031114A** SeqNo: **226989**

Analyte	Result	PQL	SPK value	SPK Ref Val	%REC	LowLimit	HighLimit	RPD Ref Val	%RPD	RPDLimit	Qual
Acenaphthene	54.69	10	100	0	54.7	43.1	89.9	62.17	12.8	30.5	
4-Chloro-3-methylphenol	128.2	20	200	0	64.1	44.1	93.2	139.5	8.44	28.6	
2-Chlorophenol	131.2	10	200	0	65.6	20.7	98	136.9	4.28	107	
1,4-Dichlorobenzene	53.18	10	100	0	53.2	24.1	90.7	56.35	5.78	62.1	
2,4-Dinitrotoluene	63.18	10	100	0	63.2	43.2	101	72.5	13.7	14.7	
N-Nitrosodi-n-propylamine	59.44	10	100	0	59.4	44.6	99.9	63.65	6.83	30.3	
4-Nitrophenol	66.85	50	200	0	33.4	11	57.5	75.44	12.1	36.3	
Pentachlorophenol	134.3	50	200	0	67.2	8.65	105	143.5	6.59	49	
Phenol	70.23	10	200	0	35.1	21.1	55.3	73.65	4.76	52.4	
Pyrene	72.62	10	100	0	72.6	35.7	111	77.63	6.67	16.3	
1,2,4-Trichlorobenzene	54.68	10	100	0	54.7	30.2	89.6	56.94	4.05	36.4	

Qualifiers: ND - Not Detected at the Reporting Limit; S - Spike Recovery outside accepted recovery limits; B - Analyte detected in the associated Method Blank
J - Analyte detected below quantitation limits; R - RPD outside accepted recovery limits

CLIENT: Kleinfelder
Work Order: 0311068
Project: R-26

QC SUMMARY REPORT
Laboratory Control Spike - generic

Sample ID **LCS-4705** Batch ID: **4705** Test Code: **SW7470** Units: **mg/L** Analysis Date **11/21/2003** Prep Date **11/21/2003**
Client ID: Run ID: **MI-LA254_031121B** SeqNo: **228480**

Analyte	Result	PQL	SPK value	SPK Ref Val	%REC	LowLimit	HighLimit	RPD Ref Val	%RPD	RPDLimit	Qual
Mercury	0.005	0.0020	0.005	0	100	80	120	0			

Sample ID **LCSD-4705** Batch ID: **4705** Test Code: **SW7470** Units: **mg/L** Analysis Date **11/21/2003** Prep Date **11/21/2003**
Client ID: Run ID: **MI-LA254_031121B** SeqNo: **228481**

Analyte	Result	PQL	SPK value	SPK Ref Val	%REC	LowLimit	HighLimit	RPD Ref Val	%RPD	RPDLimit	Qual
Mercury	0.005	0.0020	0.005	0	100	80	120	0.005	0	20	

Sample ID **LCS-4697** Batch ID: **4697** Test Code: **SW1311/6010** Units: **mg/L** Analysis Date **11/21/2003 10:52:53 A** Prep Date **11/20/2003**
Client ID: Run ID: **ICP_031121A** SeqNo: **228324**

Analyte	Result	PQL	SPK value	SPK Ref Val	%REC	LowLimit	HighLimit	RPD Ref Val	%RPD	RPDLimit	Qual
Arsenic	0.4495	5.0	0.5	0	89.9	80	120	0			
Barium	0.4528	100	0.5	0	90.6	80	120	0			
Cadmium	0.4496	1.0	0.5	0	89.9	80	120	0			
Chromium	0.4673	5.0	0.5	0	93.5	80	120	0			
Lead	0.4434	5.0	0.5	0	88.7	80	120	0			
Selenium	0.449	1.0	0.5	0	89.8	80	120	0			
Silver	0.4537	5.0	0.5	0.007017	89.3	80	120	0			

Qualifiers:
ND - Not Detected at the Reporting Limit
J - Analyte detected below quantitation limits
S - Spike Recovery outside accepted recovery limits
R - RPD outside accepted recovery limits
B - Analyte detected in the associated Method Blank

CLIENT: Kleinfelder
Work Order: 0311068
Project: R-26

QC SUMMARY REPORT
Laboratory Control Spike Duplicate

Sample ID **LCSD-4697** Batch ID: **4697** Test Code: **SW1311/6010** Units: **mg/L** Analysis Date **11/21/2003 10:56:46 A** Prep Date **11/20/2003**

Client ID: Run ID: **ICP_031121A** SeqNo: **228325**

Analyte	Result	PQL	SPK value	SPK Ref Val	%REC	LowLimit	HighLimit	RPD Ref Val	%RPD	RPDLimit	Qual
Arsenic	0.456	5.0	0.5	0	91.2	80	120	0.4495	0	20	
Barium	0.4592	100	0.5	0	91.8	80	120	0.4528	0	20	
Cadmium	0.4507	1.0	0.5	0	90.1	80	120	0.4496	0	20	
Chromium	0.4723	5.0	0.5	0	94.5	80	120	0.4673	0	20	
Lead	0.4423	5.0	0.5	0	88.5	80	120	0.4434	0	20	
Selenium	0.4568	1.0	0.5	0	91.4	80	120	0.449	0	20	
Silver	0.4608	5.0	0.5	0.007017	90.8	80	120	0.4537	0	20	

Qualifiers:
ND - Not Detected at the Reporting Limit
J - Analyte detected below quantitation limits
S - Spike Recovery outside accepted recovery limits
R - RPD outside accepted recovery limits
B - Analyte detected in the associated Method Blank

Hall Environmental Analysis Laboratory

Sample Receipt Checklist

Client Name KLEIN | Date and Time Received: 11/10/2003

Work Order Number 0311068 | Received by AT

Checklist completed by _____ 11/10/03
Signature | Date

Matrix | Carrier name Client drop-off

Shipping container/cooler in good condition?	Yes ☑	No ☐	Not Present ☐	
Custody seals intact on shipping container/cooler?	Yes ☐	No ☐	Not Present ☐	Not Shipped ☑
Custody seals intact on sample bottles?	Yes ☐	No ☐	N/A ☑	
Chain of custody present?	Yes ☑	No ☐		
Chain of custody signed when relinquished and received?	Yes ☑	No ☐		
Chain of custody agrees with sample labels?	Yes ☐	No ☑		
Samples in proper container/bottle?	Yes ☑	No ☐		
Sample containers intact?	Yes ☑	No ☐		
Sufficient sample volume for indicated test?	Yes ☑	No ☐		
All samples received within holding time?	Yes ☑	No ☐		
Water - VOA vials have zero headspace?	No VOA vials submitted ☐	Yes ☑	No ☐	
Water - pH acceptable upon receipt?	Yes ☐	No ☐	N/A ☑	
Container/Temp Blank temperature?	14°	*4° C ± 2 Acceptable* If given sufficient time to cool.		

COMMENTS:

Client contacted _____ Date contacted: _____ Person contacted _____

Contacted by: _____ Regarding _____

Comments: _____

_____

_____

_____

_____

Corrective Action _____

_____

_____

CHAIN-OF-CUSTODY RECORD

Accreditation Applied: NELAC ☐ USACE ☐ Other: _____

HALL ENVIRONMENTAL ANALYSIS LABORATORY
4901 Hawkins NE, Suite D
Albuquerque, New Mexico 87109
Tel. 505.345.3975 Fax 505.345.4107
www.hallenvironmental.com

Client: Kleinfelder

Address: 8300 Jefferson NE
Suite 100
Albuquerque, NM 87113

Phone #: 344-7373

Fax #: 344-1711

Project Name: R-26

Project #:

Project Manager: Mark Everett

Sampler: John Carrillo

Sample Temperature: ~~57°~~ F 14°C

ANALYSIS REQUEST

Date	Time	Matrix	Sample I.D. No.	Number/Volume	Preservative H_gCl_2	Preservative HNO_3	Preservative	HEAL No.	BTEX + MTBE + TMB's (8021)	BTEX + MTBE + TPH (Gasoline Only)	TPH Method 8015B MOD (Gas/Diesel)	TPH (Method 418.1)	EDB (Method 504.1)	EDC (Method 8021)	8310 (PNA or PAH)	~~RCRA 8 Metals~~ Perchlorates	Cations (Na, K, Ca, Mg)	Anions (F, Cl, NO_3, NO_2, PO_4, SO_4)	8081 Pesticides / PCB's (8082)	8260 (VOA)	8270 (Semi-VOA)	Alpha, Beta, Gamma, Iron	Tritium	Metals	Air Bubbles or Headspace (Y or N)
11/10/03	1250	H_2O	R-26 pit A Amber	Amber 1 liter			X	0311068-1													X				
11/10/03	1250	H_2O	R-26 pit B Amber	Amber 1 liter			X												X						
11/10/03	1250	H_2O	R-26 pit C	40 ml	X															X					
11/10/03	1250	H_2O	R-26 pit D	40 ml	X															X					
11/10/03	1250	H_2O	R-26 pit E	40 ml	X															X					
11/10/03	1250	H_2O	R-26 pit F	Poly liter		X																X			
11/10/03	1250	H_2O	R-26 pit G	Poly liter		X																	X		
11/10/03	1250	H_2O	R-26 pit H	Poly liter		X																		X	
11/10/03	1250	H_2O	R-26 pit I	½ liter Poly			X									X									
11/10/03	1250	H_2O	R-26 pit J	½ liter Poly			X											X							
11/10/03	1250	H_2O	R-26 pit K	100 ml Poly			H_2SO_4																		
			Trip Blank					-2												X					

Date:	Time:	Relinquished By: (Signature)	Remarks:
11/10/03	1615	[signature]	Received by Anne Thorne 11/10/03
11/10/03	1250	Soil R26 Cuttings	3 Bgz 1615 -3

Remarks: -03 see list for soils per Bernie Bookisch

Hall Environmental Analysis Laboratory

DATE: *22-Dec-03*

Remit To: Hall Environmental Analysis
4901 Hawkins NE, Suite D
Albuquerque, New Mexico 87109-
Attn: Accounts Receivable
TEL: (505) 345-3975 FAX: (505) 345-4107

INVOICE

Invoice TO: Kleinfelder
8300 Jefferson, NE Suite B
Albuquerque, NM 87113
Attn:
Phone: (505) 344-7373

Work Order: 0311068
PO Number:
Delivery Order
Project Name R-21
Date Received 11/10/2003

Invoice No: 0311068

Invoice Date: 22-Dec-03
Payment Terms: Net 30 Days

Item	Remarks	Matrix	Qty	Unit Price	Mult	Quoted	Test Total
AQPREP LIQ-LIQ: PCB.		Aqueous	1	$0.00	1	$0.00	$0.00
AQPREP SEP FUNNEL: BNA		Aqueous	1	$0.00	1	$0.00	$0.00
EPA 8330: Explosives (Soil)		Soil	1	$225.00	1.75	$393.75	$393.75
EPA Method 300.0: Anions		Aqueous	1	$105.00	1	$105.00	$105.00
EPA Method 314.0: Perchlorate		Aqueous	1	$130.00	1	$130.00	$130.00
EPA Method 6010B: Metals		Aqueous	1	$220.00	1.75	$385.00	$385.00
EPA Method 6020: Dissolved		Aqueous	1	$220.00	1	$220.00	$220.00
EPA Method 8082: PCB's		Soil	1	$70.00	1	$70.00	$70.00
EPA Method 8082: PCB's		Aqueous	1	$70.00	1	$70.00	$70.00
EPA Method 8260B: VOLATILES		Soil	1	$100.00	1	$100.00	$100.00
EPA Method 8260B: VOLATILES		Aqueous	1	$0.00	1	$0.00	$0.00
EPA Method 8260B: VOLATILES		Aqueous	1	$100.00	1	$100.00	$100.00
EPA Method 8270D: Semivolatiles		Aqueous	1	$240.00	1	$240.00	$240.00
EPA Method 8270D: Semivolatiles		Soil	1	$240.00	1	$240.00	$240.00
Gamma CS-137			1	$95.00	1.5	$142.50	$142.50
Gamma CS-137			1	$96.00	1.75	$168.00	$168.00
Gross Alpha Activity		Aqueous	1	$90.00	1.5	$135.00	$135.00
Methanol Extraction		Solid	1	$0.00	1	$0.00	$0.00
PCB Prep Soxhlet		Soil	1	$0.00	1	$0.00	$0.00
PU 238,239 & AM 241			1	$500.00	1.75	$875.00	$875.00
SOPREP SOXHLET: BNA		Soil	1	$0.00	1	$0.00	$0.00
Strontium 90			1	$140.00	1.75	$245.00	$245.00
TCLP Metals		Waste	1	$190.00	1	$190.00	$190.00
Thorium 232			1	$142.00	1.75	$248.50	$248.50
Tritium			1	$120.00	1.75	$210.00	$210.00
Tritium			1	$80.00	1.5	$120.00	$120.00
Uranium 234,235,238			1	$142.00	1.75	$248.50	$248.50

Order TOTAL: $4,636.25

Invoice TO: Kleinfelder
8300 Jefferson, NE Suite B
Albuquerque, NM 87113
Attn:
Phone: (505) 344-7373

Work Order: 0311068
PO Number:
Delivery Order
Project Name R-21
Date Received 11/10/2003

Invoice No: 0311068

Invoice Date: 22-Dec-03
Payment Terms: Net 30 Days

Item	Remarks	Matrix	Qty	Unit Price	Mult	Quoted	Test Total

Discount: 0.00%
Sales Tax: 0.00%
Misc Charges: $0.00

Misc Comments

Subtotal: $4,636.25
Payment Received: $0.00

INVOICE Total $4,636.25

All invoices are due and payable net 30 days from receipt.

Hall Environmental Analysis Laboratory

COVER LETTER

December 05, 2003

Mark Everett
Kleinfelder
8300 Jefferson, NE Suite B
Albuquerque, NM 87113
TEL: (505) 344-7373
FAX (505) 344-1711

RE: R-26 Order No.: 0311068

Dear Mark Everett:

Hall Environmental Analysis Laboratory received 3 samples on 11/10/2003 for the analyses presented in the following report.

This is a preliminary report that contains incomplete data or data that has not been fully validated. Caution should be exercised in the use of any data presented as final reported results may not reflect the values presented.

If you have any questions regarding these test results, please feel free to call.

Hall Environmental Analysis Laboratory

Date: *05-Dec-03*

CLIENT: Kleinfelder
Lab Order: 0311068
Project: R-26
Lab ID: 0311068-01

Client Sample ID: R-26 pit
Collection Date: 11/10/2003 12:50:00 PM
Matrix: AQUEOUS

Analyses	Result	Limit	Qual	Units	DF	Date Analyzed
EPA METHOD 300.0: ANIONS						Analyst: **BDH**
Fluoride	0.21	0.10		mg/L	1	11/10/2003 10:16:48 PM
Chloride	2.4	0.10		mg/L	1	11/10/2003 10:16:48 PM
Nitrogen, Nitrite (As N)	ND	0.10		mg/L	1	11/10/2003 10:16:48 PM
Bromide	6.7	0.10		mg/L	1	11/10/2003 10:16:48 PM
Nitrogen, Nitrate (As N)	ND	0.10		mg/L	1	11/10/2003 10:16:48 PM
Phosphorus, Orthophosphate (As P)	ND	0.50		mg/L	1	11/10/2003 10:16:48 PM
Sulfate	49	0.50		mg/L	1	11/10/2003 10:16:48 PM
EPA METHOD 8082: PCB'S						Analyst: **GT**
Aroclor 1016	ND	1.0		µg/L	1	11/20/2003 10:20:09 AM
Aroclor 1221	ND	5.0		µg/L	1	11/20/2003 10:20:09 AM
Aroclor 1232	ND	1.0		µg/L	1	11/20/2003 10:20:09 AM
Aroclor 1242	ND	1.0		µg/L	1	11/20/2003 10:20:09 AM
Aroclor 1248	ND	1.0		µg/L	1	11/20/2003 10:20:09 AM
Aroclor 1254	ND	1.0		µg/L	1	11/20/2003 10:20:09 AM
Aroclor 1260	ND	1.0		µg/L	1	11/20/2003 10:20:09 AM
Surr: Decachlorobiphenyl	87.4	76-111		%REC	1	11/20/2003 10:20:09 AM
Surr: Tetrachloro-m-xylene	67.4	47-94		%REC	1	11/20/2003 10:20:09 AM
EPA METHOD 8260B: VOLATILES						Analyst: **JDC**
Benzene	ND	10		µg/L	10	11/11/2003
Toluene	13	10		µg/L	10	11/11/2003
Ethylbenzene	ND	10		µg/L	10	11/11/2003
Methyl tert-butyl ether (MTBE)	ND	10		µg/L	10	11/11/2003
1,2,4-Trimethylbenzene	ND	10		µg/L	10	11/11/2003
1,3,5-Trimethylbenzene	ND	10		µg/L	10	11/11/2003
1,2-Dichloroethane (EDC)	ND	10		µg/L	10	11/11/2003
1,2-Dibromoethane (EDB)	ND	10		µg/L	10	11/11/2003
Naphthalene	ND	20		µg/L	10	11/11/2003
1-Methylnaphthalene	ND	40		µg/L	10	11/11/2003
2-Methylnaphthalene	ND	40		µg/L	10	11/11/2003
Acetone	2100	100		µg/L	10	11/11/2003
Bromobenzene	ND	10		µg/L	10	11/11/2003
Bromochloromethane	ND	10		µg/L	10	11/11/2003
Bromodichloromethane	ND	10		µg/L	10	11/11/2003
Bromoform	ND	10		µg/L	10	11/11/2003
Bromomethane	ND	20		µg/L	10	11/11/2003
2-Butanone	ND	100		µg/L	10	11/11/2003
Carbon disulfide	ND	100		µg/L	10	11/11/2003
Carbon Tetrachloride	ND	10		µg/L	10	11/11/2003
Chlorobenzene	ND	10		µg/L	10	11/11/2003
Chloroethane	ND	20		µg/L	10	11/11/2003

Qualifiers:
ND - Not Detected at the Reporting Limit
J - Analyte detected below quantitation limit
B - Analyte detected in the associated Method Blank
* - Value exceeds Maximum Contaminant Level
S - Spike Recovery outside accepted recovery limits
R - RPD outside accepted recovery limits
E - Value above quantitation range

Hall Environmental Analysis Laboratory

Date: *05-Dec-03*

CLIENT: Kleinfelder
Lab Order: 0311068
Project: R-26
Lab ID: 0311068-01

Client Sample ID: R-26 pit
Collection Date: 11/10/2003 12:50:00 PM
Matrix: AQUEOUS

Analyses	Result	Limit	Qual	Units	DF	Date Analyzed
Chloroform	ND	10		µg/L	10	11/11/2003
Chloromethane	ND	10		µg/L	10	11/11/2003
2-Chlorotoluene	ND	10		µg/L	10	11/11/2003
4-Chlorotoluene	ND	10		µg/L	10	11/11/2003
cis-1,2-DCE	ND	10		µg/L	10	11/11/2003
cis-1,3-Dichloropropene	ND	10		µg/L	10	11/11/2003
1,2-Dibromo-3-chloropropane	ND	20		µg/L	10	11/11/2003
Dibromochloromethane	ND	10		µg/L	10	11/11/2003
Dibromomethane	ND	20		µg/L	10	11/11/2003
1,2-Dichlorobenzene	ND	10		µg/L	10	11/11/2003
1,3-Dichlorobenzene	ND	10		µg/L	10	11/11/2003
1,4-Dichlorobenzene	ND	10		µg/L	10	11/11/2003
Dichlorodifluoromethane	ND	10		µg/L	10	11/11/2003
1,1-Dichloroethane	ND	10		µg/L	10	11/11/2003
1,1-Dichloroethene	ND	10		µg/L	10	11/11/2003
1,2-Dichloropropane	ND	10		µg/L	10	11/11/2003
1,3-Dichloropropane	ND	10		µg/L	10	11/11/2003
2,2-Dichloropropane	ND	10		µg/L	10	11/11/2003
1,1-Dichloropropene	ND	10		µg/L	10	11/11/2003
Hexachlorobutadiene	ND	10		µg/L	10	11/11/2003
2-Hexanone	ND	100		µg/L	10	11/11/2003
Isopropylbenzene	ND	10		µg/L	10	11/11/2003
4-Isopropyltoluene	ND	10		µg/L	10	11/11/2003
4-Methyl-2-pentanone	ND	100		µg/L	10	11/11/2003
Methylene Chloride	ND	30		µg/L	10	11/11/2003
n-Butylbenzene	ND	10		µg/L	10	11/11/2003
n-Propylbenzene	ND	10		µg/L	10	11/11/2003
sec-Butylbenzene	ND	10		µg/L	10	11/11/2003
Styrene	ND	10		µg/L	10	11/11/2003
tert-Butylbenzene	ND	10		µg/L	10	11/11/2003
1,1,1,2-Tetrachloroethane	ND	10		µg/L	10	11/11/2003
1,1,2,2-Tetrachloroethane	ND	10		µg/L	10	11/11/2003
Tetrachloroethene (PCE)	ND	10		µg/L	10	11/11/2003
trans-1,2-DCE	ND	10		µg/L	10	11/11/2003
trans-1,3-Dichloropropene	ND	10		µg/L	10	11/11/2003
1,2,3-Trichlorobenzene	ND	10		µg/L	10	11/11/2003
1,2,4-Trichlorobenzene	ND	10		µg/L	10	11/11/2003
1,1,1-Trichloroethane	ND	10		µg/L	10	11/11/2003
1,1,2-Trichloroethane	ND	10		µg/L	10	11/11/2003
Trichloroethene (TCE)	ND	10		µg/L	10	11/11/2003
Trichlorofluoromethane	ND	10		µg/L	10	11/11/2003
1,2,3-Trichloropropane	ND	20		µg/L	10	11/11/2003

Qualifiers:

ND - Not Detected at the Reporting Limit
J - Analyte detected below quantitation limit
B - Analyte detected in the associated Method Blank
* - Value exceeds Maximum Contaminant Level
S - Spike Recovery outside accepted recovery limits
R - RPD outside accepted recovery limits
E - Value above quantitation range

Hall Environmental Analysis Laboratory

Date: *05-Dec-03*

CLIENT: Kleinfelder
Client Sample ID: R-26 pit
Lab Order: 0311068
Collection Date: 11/10/2003 12:50:00 PM
Project: R-26
Lab ID: 0311068-01
Matrix: AQUEOUS

Analyses	Result	Limit	Qual	Units	DF	Date Analyzed
Vinyl chloride	ND	20		µg/L	10	11/11/2003
Xylenes, Total	ND	10		µg/L	10	11/11/2003
Surr: 1,2-Dichloroethane-d4	96.4	70.6-124		%REC	10	11/11/2003
Surr: 4-Bromofluorobenzene	92.8	76.2-122		%REC	10	11/11/2003
Surr: Dibromofluoromethane	94.1	67.2-131		%REC	10	11/11/2003
Surr: Toluene-d8	107	82.1-123		%REC	10	11/11/2003
EPA METHOD 8270D: SEMIVOLATILES						Analyst: **CS**
Acenaphthene	ND	100		µg/L	1	11/14/2003
Acenaphthylene	ND	100		µg/L	1	11/14/2003
Aniline	ND	100		µg/L	1	11/14/2003
Anthracene	ND	100		µg/L	1	11/14/2003
Azobenzene	ND	100		µg/L	1	11/14/2003
Benz(a)anthracene	ND	100		µg/L	1	11/14/2003
Benzidine	ND	200		µg/L	1	11/14/2003
Benzo(a)pyrene	ND	100		µg/L	1	11/14/2003
Benzo(b)fluoranthene	ND	100		µg/L	1	11/14/2003
Benzo(g,h,i)perylene	ND	100		µg/L	1	11/14/2003
Benzo(k)fluoranthene	ND	100		µg/L	1	11/14/2003
Benzoic acid	ND	500		µg/L	1	11/14/2003
Benzyl alcohol	ND	200		µg/L	1	11/14/2003
Bis(2-chloroethoxy)methane	ND	100		µg/L	1	11/14/2003
Bis(2-chloroethyl)ether	ND	100		µg/L	1	11/14/2003
Bis(2-chloroisopropyl)ether	ND	100		µg/L	1	11/14/2003
Bis(2-ethylhexyl)phthalate	ND	100		µg/L	1	11/14/2003
4-Bromophenyl phenyl ether	ND	100		µg/L	1	11/14/2003
Butyl benzyl phthalate	ND	100		µg/L	1	11/14/2003
Carbazole	ND	100		µg/L	1	11/14/2003
4-Chloro-3-methylphenol	ND	200		µg/L	1	11/14/2003
4-Chloroaniline	ND	200		µg/L	1	11/14/2003
2-Chloronaphthalene	ND	100		µg/L	1	11/14/2003
2-Chlorophenol	ND	100		µg/L	1	11/14/2003
4-Chlorophenyl phenyl ether	ND	100		µg/L	1	11/14/2003
Chrysene	ND	100		µg/L	1	11/14/2003
Di-n-butyl phthalate	ND	100		µg/L	1	11/14/2003
Di-n-octyl phthalate	ND	100		µg/L	1	11/14/2003
Dibenz(a,h)anthracene	ND	100		µg/L	1	11/14/2003
Dibenzofuran	ND	100		µg/L	1	11/14/2003
1,2-Dichlorobenzene	ND	100		µg/L	1	11/14/2003
1,3-Dichlorobenzene	ND	100		µg/L	1	11/14/2003
1,4-Dichlorobenzene	ND	100		µg/L	1	11/14/2003
3,3'-Dichlorobenzidine	ND	100		µg/L	1	11/14/2003
Diethyl phthalate	ND	100		µg/L	1	11/14/2003

Qualifiers:
ND - Not Detected at the Reporting Limit
S - Spike Recovery outside accepted recovery limits
J - Analyte detected below quantitation limit
R - RPD outside accepted recovery limits
B - Analyte detected in the associated Method Blank
E - Value above quantitation range
* - Value exceeds Maximum Contaminant Level

Hall Environmental Analysis Laboratory

Date: *05-Dec-03*

CLIENT: Kleinfelder
Lab Order: 0311068
Project: R-26
Lab ID: 0311068-01

Client Sample ID: R-26 pit
Collection Date: 11/10/2003 12:50:00 PM
Matrix: AQUEOUS

Analyses	Result	Limit	Qual	Units	DF	Date Analyzed
Dimethyl phthalate	ND	100		µg/L	1	11/14/2003
2,4-Dichlorophenol	ND	100		µg/L	1	11/14/2003
2,4-Dimethylphenol	ND	100		µg/L	1	11/14/2003
4,6-Dinitro-2-methylphenol	ND	500		µg/L	1	11/14/2003
2,4-Dinitrophenol	ND	500		µg/L	1	11/14/2003
2,4-Dinitrotoluene	ND	100		µg/L	1	11/14/2003
2,6-Dinitrotoluene	ND	100		µg/L	1	11/14/2003
Fluoranthene	ND	100		µg/L	1	11/14/2003
Fluorene	ND	100		µg/L	1	11/14/2003
Hexachlorobenzene	ND	100		µg/L	1	11/14/2003
Hexachlorobutadiene	ND	100		µg/L	1	11/14/2003
Hexachlorocyclopentadiene	ND	100		µg/L	1	11/14/2003
Hexachloroethane	ND	100		µg/L	1	11/14/2003
Indeno(1,2,3-cd)pyrene	ND	100		µg/L	1	11/14/2003
Isophorone	ND	100		µg/L	1	11/14/2003
2-Methylnaphthalene	ND	100		µg/L	1	11/14/2003
2-Methylphenol	ND	100		µg/L	1	11/14/2003
3+4-Methylphenol	ND	100		µg/L	1	11/14/2003
N-Nitrosodi-n-propylamine	ND	100		µg/L	1	11/14/2003
N-Nitrosodiphenylamine	ND	100		µg/L	1	11/14/2003
Naphthalene	ND	100		µg/L	1	11/14/2003
2-Nitroaniline	ND	500		µg/L	1	11/14/2003
3-Nitroaniline	ND	500		µg/L	1	11/14/2003
4-Nitroaniline	ND	200		µg/L	1	11/14/2003
Nitrobenzene	ND	100		µg/L	1	11/14/2003
2-Nitrophenol	ND	100		µg/L	1	11/14/2003
4-Nitrophenol	ND	500		µg/L	1	11/14/2003
Pentachlorophenol	ND	500		µg/L	1	11/14/2003
Phenanthrene	ND	100		µg/L	1	11/14/2003
Phenol	ND	100		µg/L	1	11/14/2003
Pyrene	ND	100		µg/L	1	11/14/2003
Pyridine	ND	100		µg/L	1	11/14/2003
1,2,4-Trichlorobenzene	ND	100		µg/L	1	11/14/2003
2,4,5-Trichlorophenol	ND	100		µg/L	1	11/14/2003
2,4,6-Trichlorophenol	ND	100		µg/L	1	11/14/2003
Surr: 2,4,6-Tribromophenol	57.2	16.6-115		%REC	1	11/14/2003
Surr: 2-Fluorobiphenyl	47.4	37-95.7		%REC	1	11/14/2003
Surr: 2-Fluorophenol	39.3	9.54-89.8		%REC	1	11/14/2003
Surr: 4-Terphenyl-d14	68.0	47.9-115		%REC	1	11/14/2003
Surr: Nitrobenzene-d5	45.7	38-106		%REC	1	11/14/2003
Surr: Phenol-d6	31.5	10.7-63.4		%REC	1	11/14/2003

Qualifiers:

ND - Not Detected at the Reporting Limit
J - Analyte detected below quantitation limit
B - Analyte detected in the associated Method Blank
* - Value exceeds Maximum Contaminant Level
S - Spike Recovery outside accepted recovery limits
R - RPD outside accepted recovery limits
E - Value above quantitation range

Hall Environmental Analysis Laboratory

Date: *05-Dec-03*

CLIENT: Kleinfelder
Lab Order: 0311068
Project: R-26
Lab ID: 0311068-02

Client Sample ID: Trip Blank
Collection Date:
Matrix: TRIP BLANK

Analyses	Result	Limit	Qual	Units	DF	Date Analyzed
EPA METHOD 8260B: VOLATILES						Analyst: **JDC**
Benzene	ND	1.0		µg/L	1	11/11/2003
Toluene	ND	1.0		µg/L	1	11/11/2003
Ethylbenzene	ND	1.0		µg/L	1	11/11/2003
Methyl tert-butyl ether (MTBE)	ND	1.0		µg/L	1	11/11/2003
1,2,4-Trimethylbenzene	ND	1.0		µg/L	1	11/11/2003
1,3,5-Trimethylbenzene	ND	1.0		µg/L	1	11/11/2003
1,2-Dichloroethane (EDC)	ND	1.0		µg/L	1	11/11/2003
1,2-Dibromoethane (EDB)	ND	1.0		µg/L	1	11/11/2003
Naphthalene	ND	2.0		µg/L	1	11/11/2003
1-Methylnaphthalene	ND	4.0		µg/L	1	11/11/2003
2-Methylnaphthalene	ND	4.0		µg/L	1	11/11/2003
Acetone	ND	10		µg/L	1	11/11/2003
Bromobenzene	ND	1.0		µg/L	1	11/11/2003
Bromochloromethane	ND	1.0		µg/L	1	11/11/2003
Bromodichloromethane	ND	1.0		µg/L	1	11/11/2003
Bromoform	ND	1.0		µg/L	1	11/11/2003
Bromomethane	ND	2.0		µg/L	1	11/11/2003
2-Butanone	ND	10		µg/L	1	11/11/2003
Carbon disulfide	ND	10		µg/L	1	11/11/2003
Carbon Tetrachloride	ND	1.0		µg/L	1	11/11/2003
Chlorobenzene	ND	1.0		µg/L	1	11/11/2003
Chloroethane	ND	2.0		µg/L	1	11/11/2003
Chloroform	ND	1.0		µg/L	1	11/11/2003
Chloromethane	ND	1.0		µg/L	1	11/11/2003
2-Chlorotoluene	ND	1.0		µg/L	1	11/11/2003
4-Chlorotoluene	ND	1.0		µg/L	1	11/11/2003
cis-1,2-DCE	ND	1.0		µg/L	1	11/11/2003
cis-1,3-Dichloropropene	ND	1.0		µg/L	1	11/11/2003
1,2-Dibromo-3-chloropropane	ND	2.0		µg/L	1	11/11/2003
Dibromochloromethane	ND	1.0		µg/L	1	11/11/2003
Dibromomethane	ND	2.0		µg/L	1	11/11/2003
1,2-Dichlorobenzene	ND	1.0		µg/L	1	11/11/2003
1,3-Dichlorobenzene	ND	1.0		µg/L	1	11/11/2003
1,4-Dichlorobenzene	ND	1.0		µg/L	1	11/11/2003
Dichlorodifluoromethane	ND	1.0		µg/L	1	11/11/2003
1,1-Dichloroethane	ND	1.0		µg/L	1	11/11/2003
1,1-Dichloroethene	ND	1.0		µg/L	1	11/11/2003
1,2-Dichloropropane	ND	1.0		µg/L	1	11/11/2003
1,3-Dichloropropane	ND	1.0		µg/L	1	11/11/2003
2,2-Dichloropropane	ND	1.0		µg/L	1	11/11/2003
1,1-Dichloropropene	ND	1.0		µg/L	1	11/11/2003

Qualifiers:
ND - Not Detected at the Reporting Limit
J - Analyte detected below quantitation limit
B - Analyte detected in the associated Method Blank
* - Value exceeds Maximum Contaminant Level
S - Spike Recovery outside accepted recovery limits
R - RPD outside accepted recovery limits
E - Value above quantitation range

Hall Environmental Analysis Laboratory

Date: *05-Dec-03*

CLIENT: Kleinfelder
Client Sample ID: Trip Blank
Lab Order: 0311068
Collection Date:
Project: R-26
Lab ID: 0311068-02
Matrix: TRIP BLANK

Analyses	Result	Limit	Qual	Units	DF	Date Analyzed
Hexachlorobutadiene	ND	1.0		µg/L	1	11/11/2003
2-Hexanone	ND	10		µg/L	1	11/11/2003
Isopropylbenzene	ND	1.0		µg/L	1	11/11/2003
4-Isopropyltoluene	ND	1.0		µg/L	1	11/11/2003
4-Methyl-2-pentanone	ND	10		µg/L	1	11/11/2003
Methylene Chloride	ND	3.0		µg/L	1	11/11/2003
n-Butylbenzene	ND	1.0		µg/L	1	11/11/2003
n-Propylbenzene	ND	1.0		µg/L	1	11/11/2003
sec-Butylbenzene	ND	1.0		µg/L	1	11/11/2003
Styrene	ND	1.0		µg/L	1	11/11/2003
tert-Butylbenzene	ND	1.0		µg/L	1	11/11/2003
1,1,1,2-Tetrachloroethane	ND	1.0		µg/L	1	11/11/2003
1,1,2,2-Tetrachloroethane	ND	1.0		µg/L	1	11/11/2003
Tetrachloroethene (PCE)	ND	1.0		µg/L	1	11/11/2003
trans-1,2-DCE	ND	1.0		µg/L	1	11/11/2003
trans-1,3-Dichloropropene	ND	1.0		µg/L	1	11/11/2003
1,2,3-Trichlorobenzene	ND	1.0		µg/L	1	11/11/2003
1,2,4-Trichlorobenzene	ND	1.0		µg/L	1	11/11/2003
1,1,1-Trichloroethane	ND	1.0		µg/L	1	11/11/2003
1,1,2-Trichloroethane	ND	1.0		µg/L	1	11/11/2003
Trichloroethene (TCE)	ND	1.0		µg/L	1	11/11/2003
Trichlorofluoromethane	ND	1.0		µg/L	1	11/11/2003
1,2,3-Trichloropropane	ND	2.0		µg/L	1	11/11/2003
Vinyl chloride	ND	2.0		µg/L	1	11/11/2003
Xylenes, Total	ND	1.0		µg/L	1	11/11/2003
Surr: 1,2-Dichloroethane-d4	96.2	70.6-124		%REC	1	11/11/2003
Surr: 4-Bromofluorobenzene	89.1	76.2-122		%REC	1	11/11/2003
Surr: Dibromofluoromethane	95.4	67.2-131		%REC	1	11/11/2003
Surr: Toluene-d8	105	82.1-123		%REC	1	11/11/2003

Qualifiers:
ND - Not Detected at the Reporting Limit
J - Analyte detected below quantitation limit
B - Analyte detected in the associated Method Blank
* - Value exceeds Maximum Contaminant Level
S - Spike Recovery outside accepted recovery limits
R - RPD outside accepted recovery limits
E - Value above quantitation range

Environmental Health Laboratories
The Nation's Drinking Water Laboratory

110 S. Hill Street
South Bend, IN 46617
574.233.4777
800.332.4345
Fax: 574.233.8207
www.ehl.cc

LABORATORY REPORT

Client: Hall Environmental
Attn: Andy Freeman
4901 Hawkins NE
Suite A
Albuquerque, NM 87109

Report#: 966062

Priority: Standard Written

Status: Final

Project/Site: R-26 pit / 0311068-01E

Samples Submitted: One groundwater sample

Copies to: None

Collected: 11/10/03 By: Client Received: 11/12/03

REPORT SUMMARY

One groundwater sample was submitted for perchlorate analysis.

Note: Sample container was provided by the client.

Detailed quantitative results are presented on the following page.

We appreciate the opportunity to provide you with this analysis. If you have any questions concerning this report, please do not hesitate to call us at (574) 233-4777.

Note: This report may not be reproduced, except in full, without written approval from Environmental Health Laboratories (EHL). EHL is accredited by the National Environmental Laboratory Accreditation Program (NELAP). This report satisfies the requirements of your project but has not been prepared to comply with NELAP reporting requirements.

REVIEWED BY: William Reeves Reporting Manager DATE: 11/21/03

FINALIZED BY: [signature] DATE: 11-21-03

A Division of Underwriters Laboratories Inc.

Client: Hall Environmental

Report#: 966062

PERCHLORATE — Groundwater

Lab#	Sampling Point	MRL	Results
966062	R-26 pit / 0311068-01E	4.0	< 400 † ug/L

Analyzed: 11/14/03 Analyst: NB Method: 314.0

† Result presented is based upon a dilution factor of 100, due to poor sample matrix.

A Division of Underwriters Laboratories Inc.

REFERENCES AND DEFINITIONS OF TERMS

General Chemistry

References: 1. EPA-600/4-79-020
Methods for Chemical Analysis of Water and Wastes
2. Standard Methods For the Examination of Water and Wastewater
Vol. 19, 1995

MRL = EHL's Minimum Reporting Limit

Results: Values presented in the result column represent the lowest reportable value for a parameter after correcting for all sample dilutions.

< = "less than." This number is the lowest reportable value by the procedure used for analysis after factoring in all dilutions.

√ = If dilutions were required for quantitation of specific parameters, they are indicated by a (√) preceding the result.

1 ug/L = 1 microgram per liter (ug/L) = 1 part per billion

A Division of Underwriters Laboratories Inc.

ENERGY LABORATORIES, INC. *2393 Salt Creek Highway (82601)* P.O. Box 3258 * Casper, WY 82602
Toll Free 888.235.0515 * 307.235.0515 * Fax 307.234.1639 * casper@energylab.com

LABORATORY ANALYTICAL REPORT

Client: Hall Environmental
Project: Not Indicated
Lab ID: C03110337-001
Client Sample ID: R-26 Pit 0311068-01D

Report Date: 12/04/03
Collection Date: 11/10/03 12:50
Date Received: 11/11/03
Matrix: Aqueous

Analyses	Result	Units	Qual	RL	MCL/ QCL	Method	Analysis Date / By
MAJOR IONS							
Calcium	10.1	mg/L		1.0		E200.7	11/12/03 18:33 cp
Magnesium	2.2	mg/L		1.0		E200.7	11/12/03 18:33 cp
Potassium	4.4	mg/L		1.0		E200.7	11/12/03 18:33 cp
Sodium	69.4	mg/L		1.0		E200.7	11/12/03 18:33 cp
METALS - DISSOLVED							
Aluminum	7.23	mg/L		0.001		E200.8	11/22/03 02:14 smd
Antimony	0.004	mg/L		0.001		E200.8	11/22/03 02:14 smd
Arsenic	0.031	mg/L	D	0.002		E200.8	11/22/03 02:14 smd
Barium	0.100	mg/L		0.001		E200.8	11/22/03 02:14 smd
Beryllium	ND	mg/L		0.001		E200.8	12/02/03 18:41 smd
Cadmium	ND	mg/L		0.001		E200.8	11/22/03 02:14 smd
Chromium	0.003	mg/L	D	0.002		E200.8	11/22/03 02:14 smd
Cobalt	ND	mg/L		0.001		E200.8	11/22/03 02:14 smd
Copper	0.029	mg/L		0.001		E200.8	11/22/03 02:14 smd
Iron	1.08	mg/L		0.030		E200.7	11/12/03 18:33 cp
Lead	0.011	mg/L		0.001		E200.8	11/22/03 02:14 smd
Manganese	0.072	mg/L		0.001		E200.8	11/22/03 02:14 smd
Mercury	0.001	mg/L		0.001		E200.8	11/22/03 02:14 smd
Nickel	ND	mg/L		0.001		E200.8	11/22/03 02:14 smd
Selenium	ND	mg/L	D	0.005		E200.8	11/22/03 02:14 smd
Silver	0.009	mg/L		0.001		E200.8	11/22/03 02:14 smd
Thallium	ND	mg/L		0.001		E200.8	11/22/03 02:14 smd
Vanadium	0.005	mg/L		0.001		E200.8	11/22/03 02:14 smd
Zinc	0.135	mg/L		0.001		E200.8	11/22/03 02:14 smd
RADIONUCLIDES - TOTAL							
Gross Alpha	10.7	pCi/L		1.0		E900.0	11/17/03 09:00 rs
Gross Alpha precision (±)	1.0	pCi/L				E900.0	11/17/03 09:00 rs
Gross Gamma	ND	pCi/L		20.0		E901.1	11/13/03 09:38 db
Tritium	ND	pCi/L		1200		E906.0	11/12/03 12:00 db

Report Definitions:
RL - Analyte reporting limit.
QCL - Quality control limit.
D - RL increased due o sample matrix interference.
MCL - Maximum contaminant level.
ND - Not detected a he reporting limit.

QA/QC Summary Report

Client: Hall Environmental
Project: Not Indicated

Report Date: 12/04/03
Work Order: C03110337

Analyte	Result	Units	RL	%REC	Low Limit	High Limit	RPD	RPDLimit	Qual
Method: E200.7									Batch: 4581
Sample ID: C03110365-001CMS1	Matrix Spike								11/12/03 17:57
Calcium	766	mg/L	1.00	99.5	80	120			
Magnesium	528	mg/L	1.00	96.3	80	120			
Potassium	504	mg/L	1.00	94.8	80	120			
Sodium	541	mg/L	1.00	88.7	80	120			
Sample ID: C03110365-001CMSD1	Matrix Spike Duplicate								11/12/03 18:05
Calcium	763	mg/L	1.00	98.9	80	120	0.4	20	
Magnesium	528	mg/L	1.00	96.3	80	120	0	20	
Potassium	507	mg/L	1.00	95.4	80	120	0.6	20	
Sodium	543	mg/L	1.00	89.1	80	120	0.4	20	
Method: E200.8									Batch: 4581
Sample ID: C03110534-001BMS	Matrix Spike								11/21/03 23:09
Antimony	0.534	mg/L	0.00100	106	70	130			
Arsenic	0.456	mg/L	0.00200	91.2	70	130			
Barium	0.567	mg/L	0.00100	109	70	130			
Beryllium	0.383	mg/L	0.00100	75.7	70	130			
Cadmium	0.468	mg/L	0.00100	91.7	70	130			
Chromium	0.509	mg/L	0.00200	102	70	130			
Cobalt	0.548	mg/L	0.00100	99.3	70	130			
Copper	0.520	mg/L	0.00100	87.6	70	130			
Lead	0.530	mg/L	0.00100	106	70	130			
Mercury	0.0543	mg/L	0.00100	109	70	130			
Nickel	0.621	mg/L	0.00100	83.2	70	130			
Thallium	0.531	mg/L	0.00100	106	70	130			
Vanadium	0.536	mg/L	0.00100	106	70	130			
Sample ID: C03110534-001BMSD	Matrix Spike Duplicate								11/21/03 23:14
Antimony	0.516	mg/L	0.00100	103	70	130	3.4	20	
Arsenic	0.450	mg/L	0.00200	90	70	130	1.3	20	
Barium	0.562	mg/L	0.00100	108	70	130	0.9	20	
Beryllium	0.367	mg/L	0.00100	72.5	70	130	4.3	20	
Cadmium	0.455	mg/L	0.00100	89.2	70	130	2.8	20	
Chromium	0.511	mg/L	0.00200	102	70	130	0.4	20	
Cobalt	0.545	mg/L	0.00100	98.7	70	130	0.5	20	
Copper	0.504	mg/L	0.00100	84.4	70	130	3.1	20	
Lead	0.522	mg/L	0.00100	104	70	130	1.5	20	
Mercury	0.0551	mg/L	0.00100	110	70	130	1.5	20	
Nickel	0.597	mg/L	0.00100	78.4	70	130	4.0	20	
Thallium	0.522	mg/L	0.00100	104	70	130	1.7	20	
Vanadium	0.530	mg/L	0.00100	105	70	130	1.2	20	

Qualifiers: RL - Analyte reporting limit. ND - Not detected a he reporting limit.

QA/QC Summary Report

Client: Hall Environmental
Project: Not Indicated

Report Date: 12/04/03
Work Order: C03110337

Analyte	Result	Units	RL	%REC	Low Limit	High Limit	RPD	RPDLimit	Qual
Method: E900.0									Batch: R28843
Sample ID: C03110308-001A	Matrix Spike								11/17/03 09:00
Gross Alpha	445	pCi/L	1.00	91.6	70	130			
Sample ID: C03110308-001A	Matrix Spike Duplicate								11/17/03 09:00
Gross Alpha	419	pCi/L	1.00	86.3	70	130	5.9	30	
Sample ID: MB-R28843	Method Blank								11/17/03 09:00
Gross Alpha	ND	pCi/L	1.00						
Sample ID: LCS-R28843	Laboratory Control Spike								11/17/03 09:00
Gross Alpha	454	pCi/L	1.00	93.4	70	130			
Method: E901.1									Batch: R28507
Sample ID: LCS-R28507	Laboratory Control Spike								11/13/03 09:38
Gross Gamma	616000	pCi/L	20.0	95.4	70	130			
Sample ID: MB-R28507	Method Blank								11/13/03 09:38
Gross Gamma	ND	pCi/L	20.0						
Sample ID: C03110337-001ADUP	Sample Duplicate								11/13/03 09:38
Gross Gamma	ND	pCi/L	20.0				0	30	
Method: E906.0									Batch: R28499
Sample ID: C03110337-001BMS	Matrix Spike								11/12/03 12:00
Tritium	2000	pCi/L	1200	88.2	70	130			
Sample ID: C03110337-001BMSD	Matrix Spike Duplicate								11/12/03 12:00
Tritium	1900	pCi/L	1200	82.4	70	130	6.9	30	
Sample ID: MB-R28499	Method Blank								11/12/03 12:00
Tritium	ND	pCi/L	1200						

Qualifiers: RL - Analyte reporting limit. ND - Not detected a he reporting limit.

CHAIN-OF-CUSTODY RECORD

Accreditation Applied: NELAC ☐ USACE ☐ Other: _____

HALL ENVIRONMENTAL ANALYSIS LABORATORY
4901 Hawkins NE, Suite D
Albuquerque, New Mexico 87109
Tel. 505.345.3975 Fax 505.345.4107
www.hallenvironmental.com

Client: Kleinfelder
Address: 8300 Jefferson NE Suite 100 Albuquerque, NM 87113
Phone #: 344-7373
Fax #: 344-1711

Project Name: R-26
Project #:
Project Manager: Mark Everett
Sampler: John Carrillo
Sample Temperature: ~~37~~ F 14°

Date	Time	Matrix	Sample I.D. No.	Number/Volume	Preservative H_gCl_2	Preservative HNO_3	Preservative	HEAL No.
11/10/03	1250	H_2O	R-26 pit A Amber	Amber 1 liter			X	03 1068-1
11/10/03	1250	H_2O	R-26 pit B Amber	Amber 1 liter			X	
11/10/03	1250	H_2O	R-26 pit C	40 ml	X			
11/10/03	1250	H_2O	R-26 pit D	40 ml	X			
11/10/03	1250	H_2O	R-26 pit E	40 ml	X			
11/10/03	1250	H_2O	R-26 pit F	Poly liter		X		
11/10/03	1250	H_2O	R-26 pit G	Poly liter		X		
11/10/03	1250	H_2O	R-26 pit H	Poly liter		X		
11/10/03	1250	H_2O	R-26 pit I	½ liter Poly			X	
11/10/03	1250	H_2O	R-26 pit J	½ liter Poly			X	
11/10/03	1250	H_2O	R-26 pit K	100 ml Poly			H_2SO_4	
			Trip Blank					-2

Date	Time	Relinquished By: (Signature)	Remarks:	
11/10/03	1615		Received by: Connie Thorne	11/10/03
Date:	Time:	Relinquished By: (Signature)	Remarks:	
11/10/03	1825	Soil R26 Cuttings	3 BOZ	1615 -3

ANALYSIS REQUEST

BTEX + MTBE + TMB's (8021)	BTEX + MTBE + TPH (Gasoline Only)	TPH Method 8015B MOD (Gas/Diesel)	TPH (Method 418.1)	EDB (Method 504.1)	EDC (Method 8021)	8310 (PNA or PAH)	~~RCRA~~ 8 Metals (Uranium)	Cations (Na, K, Ca, Mg)	Anions (F, Cl, NO_3, NO_2, PO_4, SO_4)	8081 Pesticides / PCB's (8082)	8260 (VOA)	8270 (Semi-VOA)	Alpha, Beta, Gamma, Total Uranium	Tritium	Metals	Air Bubbles or Headspace (Y or N)
												X				
										X		X				
											X					
											X					
											X					
													X			
														X		
															X	
							X									
									X							
											X					

Remarks: -03 see list for soils per Bonnie Bockisch

Appendix D

Lithology Log

Lithologic Descriptions of Core and Drill Cuttings at Borehole R-26

Geologic Unit	Lithologic Description	Sample Interval (ft)	Elevation Range (ft above msl)
Qal, alluvium	No core recovery. Note: rock core samples examined for lithologic description in the interval from 5.0 to 105.0 ft bgs for this lithlog	0.0-5.0	7641.6-7636.6
	Unconsolidated material. Olive brown (2.5 YR 4/2), sandy gravel (GW) with cobbles and silt, non-plastic; core damp.	5.0-13.0	7636.6-7628.6
	No core recovery.	13.0-14.0	7628.6-7627.6
	Same material as above; weathered tuff plugging sampler shoe.	14.0-16.0	7627.6-7625.6
	No core recovery.	16.0-16.5	7625.6-7625.1
	Volcanic tuff, light brown (7.5 YR 6/4), devitrified, moderately weathered, medium dense, 30% quartz and sanidine phenocrysts (1- 2 mm), 20% pumice (up to 2.5 cm), trace dacite xenoliths.	16.5-18.5	7625.1-7623.1
	No core recovery.	18.5-19.0	7623.1-7622.6
	Volcanic tuff, red brown (2.5 YR 4/4), severely weathered tuff composed of 5% pumice, 5-10% quartz and sanidine phenocrysts, clasts of dacite (5.0 -7.5 cm), core damp.	19.0-24.0	7622.6-7617.6
	Volcanic tuff. Same material as above, with cobbles up to 7.5 cm.	24.0-25.0	7617.6-7616.6
	Volcanic tuff. Cobbles up to 7.5 cm.	25.0-29.0	7616.6-7612.6
	Volcaniclastic sediments, reddish gray (5YR 4/2), sandy clay with silt (SC), non-plastic to low plasticity. Composed of crystals and dacite fragments; core damp.	29.0-31.0	7612.6-7610.6
	No core recovery.	31.0-32.5	7610.6-7609.1
	Volcaniclastic sediments. Same material as above with larger (up to 10 cm) dacite fragments.	32.5-35.0	7609.1-7606.6
	Volcaniclastic sediments, red brown (2.5 YR 4/4), sandy gravel (GP) with silt and clay, non-plastic, gravel 40%, sand 30%, silt 20%. Composed of dacite gravels (up to to 5 cm), fine to coarse sand. Large (up to 10 cm) dacite gravel clasts stuck in geobarrel at 41 ft bgs; core damp to moist.	35.0-45.0	7606.6-7596.6
	Volcaniclastic sediments. Large dacite fragment plugging barrel. Same material as above.	45.0-50.0	7596.6-7591.6
	Volcanic tuff, yellow brown (10YR 5/8), predominantly coarse-grained sand composed of pumice fragments and quartz and sanidine crystals, 20% ash, some devitrified pumice; core damp to moist.	50.0-51.3	7591.6-7590.3
Qbt 4, Unit 4 Tshirege Member of the Bandelier Tuff	Volcanic tuff, pink (7.5 YR 7/4), fine-grained ash matrix. Yellow phenocryst-rich vitric pumice occurrence at 54 ft bgs. **Note: base of alluvium and contact with underlying Unit 4 of the Tshirege Member of the Bandelier Tuff is interpreted to be at 60 ft bgs.**	51.3-63.5	7590.3-7578.1
	Volcanic tuff, pale red (10YR 6/4), nonwelded to partially welded, slightly weathered. Composed of 20% white to light gray devitrified pumice, 10-20% quarts and sanidine phenocrysts (up to 2 mm), and 60-70% fine-grained ash matrix; core dry to damp.	63.5-65.0	7578.1-7576.6
	Volcanic tuff, light red (10R 6/6). Similar to above, reddish brown to light gray pumice increasing in abundance to 25-30% by volume. Coloration change to pale red (10R 5/4) in the interval 66.2-66.9 ft bgs.	65.0-70.0	7576.6-7571.6
	Volcanic tuff, similar to above, phenocrysts increasing in abundance (35-40%).	70.0-75.0	7571.6-7566.6
	Volcanic tuff, light red (10R 6/6). Similar to above; slight increase in degree of welding, partially welded.	75.0-80.0	7566.6-7561.6
	Volcanic tuff, light red (10R 6/6). Similar to above, partially welded.	80.0-85.0	7561.6-7556.6
	Volcanic tuff. Increase in pumice ratio to 5 to 1.	85.0-90.0	7556.6-7551.6
	Volcanic tuff. Same material as above, slight decrease in welding.	90.0-95.0	7551.6-7546.6
	Volcanic tuff, light red (10R 6/6). Similar to above.	95.0-100.0	7546.6-7541.6

Lithologic Descriptions of Core and Drill Cuttings at Borehole R-26 (Continued)

Geologic Unit	Lithologic Description	Sample Interval (ft)	Elevation Range (ft above msl)
	Volcanic tuff. Same material as above, becoming more dense at 103.6 ft bgs. Note: drill cuttings were collected and are described in the R-26 interval from 105 ft to the bottom of the borehole at 1,485 ft bgs.	100.0-105.0	7541.6-7536.6
	Volcanic tuff, light brownish gray (5YR 6/1) to grayish orange (10YR 7/4), crystal rich, moderately to strongly welded. +10F (i.e., plus No. 10 sieve-size fraction): 20-30% quartz and sanidine crystals, 1-2% unidentified dark mafic minerals; 1-2% lithic fragments (up to 1 mm); strong Fe-oxide staining. +35F (i.e., plus No. 35 sieve-size fraction): 70-75% quartz and sanidine crystals, 25-30% welded tuff fragments. WR (i.e., unsieved whole rock sample): clayey.	105-110	7536.6-7531.6
Qbt 3t, Unit 3t, Tshirege Member of the Bandelier Tuff	Volcanic tuff, moderate yellowish brown (10YR 5/4), crystal rich, strongly welded. +10F: no sample recovery. +35F 85-95% quartz and sanidine crystals; 10-15% welded crystal-tuff fragments. Note: base of Unit 4 and contact with underlying Unit 3t of the Tshirege Member of the Bandelier Tuff is interpreted to be at 120 ft bgs.	110-125	7531.6-7516.6
	Volcanic tuff, light brownish gray (5YR 6/1), moderately to strongly welded. +10F: welded crystal tuff fragments composed of 15-25% quartz and sanidine phenocrysts; 3-7% ferromagnesian phenocrysts (1-2 mm); 3-5% intermediate volcanic lithic fragments (1-2 mm); fragments exhibiting local Fe-oxide staining and white clay lining vugs. +35F: 30-40% free quartz and sanidine crystals; 60-70% welded tuff fragments.	125-140	7516.6-7501.6
	Volcanic tuff, yellowish gray (5Y 8/1), moderately to strongly welded. +10F: welded crystal tuff fragments composed of 30-40% quartz, sanidine, and minor ferromagnesian crystals; 3-5% dacite lithic fragments (up to 1mm), chips locally stained with Fe-oxide. +35F: 20-30% free quartz and sanidine crystals; 70-80% welded tuff fragments.	140-150	7501.6-7491.6
	No cuttings returned; no sample available for examination.	150-155	7491.6-7486.6
	Volcanic tuff, pale yellowish brown (10YR 6/2), moderately to strongly welded. +10F: crystal-rich welded tuff fragments composed of 35-40% quartz, sanidine, and minor oxidized ferromagnesian phenocrysts; 2-3% white lithic fragments in an aphanitic groundmass of welded ash. +35F: 15-20% free quartz and sanidine crystals; 80-85% welded tuff fragments.	155-165	7486.6-7476.6
	Volcanic tuff, medium gray (N5 6/2), strongly welded. +10F: welded crystal tuff fragments composed of 35-40% quartz, sanidine, and minor ferromagnesian phenocrysts in an aphanitic matrix of welded ash. +35F: 15-20% free quartz and sanidine crystals; 80-85% welded tuff fragments.	165-180	7476.6-7461.6
	Volcanic tuff, brownish gray (5YR 4/1), strongly welded. +10F: crystal-rich welded tuff fragments composed of 35-40% quartz, sanidine, and minor oxidized pyroxene(?) phenocrysts in an aphanitic groundmass of welded ash. +35F: 15-20% free quartz and sanidine crystals; 80-85% welded tuff fragments.	180-195	7461.6-7446.6
	Volcanic tuff, light gray (N7) to very light gray (N8), strongly welded. +10F: welded crystal tuff fragments composed of 15-20% quartz, sanidine, and minor oxidized pyroxene(?) phenocrysts in an aphanitic groundmass of welded ash. +35F: 10-15% free quartz and sanidine crystals; 80-90% welded tuff fragments.	195-210	7446.6-7431.6
	Volcanic tuff, medium light gray (N6), strongly welded. +10F: welded crystal tuff fragments composed of 40-50% quartz, sanidine, and minor oxidized ferromagnesian phenocrysts in a siliceous, aphanitic groundmass of welded ash. White fines (clay) coating chip fragments. +35F: 5-10% free quartz and sanidine crystals; 90-95% welded tuff fragments.	210-225	7431.6-7416.6

Lithologic Descriptions of Core and Drill Cuttings at Borehole R-26 (Continued)

Geologic Unit	Lithologic Description	Sample Interval (ft)	Elevation Range (ft above msl)
	Volcanic tuff, light brownish gray (5YR 6/1) to medium light gray (N6), strongly welded. +10F: welded crystal tuff fragments composed of 15-20% quartz, sanidine, and minor oxidized ferromagnesian phenocrysts and minor lithic fragments in a siliceous aphanitic groundmass of welded ash; local Fe-oxide staining. White fines (clay) coating tuff fragments. +35F: 10-15% free quartz and sanidine crystals; 85-90% welded tuff fragments.	225-230	7416.6-7411.6
	Volcanic tuff, medium light gray (N6), moderately to strongly welded. +10F: welded crystal tuff fragments composed of 20-30% quartz, sanidine, and minor oxidized ferromagnesian (biotite) phenocrysts in an aphanitic groundmass of welded ash; local Fe-oxide staining. +35F: 100% welded crystal tuff fragments.	230-240	7411.6-7401.6
	No cuttings returned; no sample available for examination.	240-245	7401.6-7396.6
	Volcanic tuff, pale yellowish brown (10YR 6/2), moderately welded, weathered appearance. +10F: welded crystal tuff fragments composed of 5-10% quartz, sanidine, and minor oxidized ferromagnesian phenocrysts in a fine-grained groundmass of welded ash; local Fe-oxide staining. +35F: 100% welded crystal tuff fragments.	245-255	7396.6-7386.6
	Volcanic tuff, medium dark gray (N4), moderately to strongly welded. +10F: welded crystal tuff fragments composed of 50-60% quartz, sanidine, and minor oxidized ferromagnesian phenocrysts in an aphanitic groundmass of welded ash. WR sample: very fine yellowish gray (5Y 6/1) ash coating chips.	255-280	7386.6-7361.6
	Volcanic tuff, light gray (N7) to medium light gray (N6), strongly welded. +10F: welded crystal tuff fragments composed of 15-20% quartz, sanidine, and minor ferromagnesian phenocrysts; trace volcanic lithics (up to 1 mm); aphanitic groundmass of welded ash. +35F: 5% free quartz and sanidine crystals; 95% welded tuff fragments.	280-300	7361.6-7341.6
Qbt 3, Unit 3, Tshirege Member of the Bandelier Tuff	Volcanic tuff, medium light gray (N6), moderately to strongly welded. +10F: welded crystal tuff fragments composed of 15-20% quartz, sanidine, and minor ferromagnesian phenocrysts; 2-5% volcanic lithics (1-3 mm); fine-grained groundmass exhibits sugary texture; local Fe-oxide staining. +35F: 30-40% free quartz and sanidine crystals; 60-70% welded tuff fragments.	300-305	7341.6-7336.6
	Insufficient recovery for sample collection and description.	305-315	7336.6-7326.6
	Volcanic tuff, medium gray (N5), crystal-rich, strongly welded. +10F: welded crystal tuff fragments composed of 40-60% quartz, sanidine, and minor ferromagnesian phenocrysts; fine-grained groundmass; local Fe-oxide staining.	315-325	7326.6-7316.6
	Volcanic tuff, medium light gray (N6), strongly welded. +10F: welded crystal tuff fragments composed of 30-35% quartz, sanidine, and minor ferromagnesian (pyroxene?) phenocrysts; 1% aphyric volcanic lithics (2-5 mm); aphanitic groundmass. +35F: 50% free quartz and sanidine crystals; 50% welded tuff fragments. WR sample: 50% pale yellowish brown (10YR 6/2) fines; 50% crystals and tuff fragments.	325-340	7316.6-7301.6
	No cuttings returned; no sample available for examination.	340-345	7301.6-7296.6
	Volcanic tuff, light brownish gray (5YR 6/1), strongly welded. +10F: welded crystal tuff fragments composed of 30-40% quartz, sanidine, and minor ferromagnesian phenocrysts; fine-grained groundmass. +35F: 70-80% free quartz and sanidine crystals; 20-30% welded tuff fragments.	345-360	7296.6-7281.6

Lithologic Descriptions of Core and Drill Cuttings at Borehole R-26 (Continued)

Geologic Unit	Lithologic Description	Sample Interval (ft)	Elevation Range (ft above msl)
Qbt 2, Unit 2, Tshirege Member of the Bandelier Tuff	Volcanic tuff, medium light gray (N6), strongly welded. +10F: welded crystal tuff fragments composed of 30-40% quartz, sanidine, and minor ferromagnesian phenocrysts; 1-2% volcanic lithics (up to 1 cm); aphanitic groundmass. +35F: 70-80% free quartz and sanidine crystals; 20-30% welded tuff fragments. WR sample: 50% pale light brownish gray fines; 50% welded tuff fragments. Note: base of Unit 3 and contact with underlying Unit 2 of the Tshirege Member of the Bandelier Tuff is interpreted to be at 365 ft bgs.	360-370	7281.6-7271.6
	Volcanic tuff, pale brown (5YR 5/2), moderately welded. +10F: 50% welded crystal tuff fragments composed of quartz, sanidine, and minor ferromagnesian (hornblende?) phenocrysts in aphanitic groundmass of welded ash; 50% dacite lithic fragments with varicolored (yellow, white, green) clay filling vugs); Fe-oxide staining common. +35F: 70-80% free quartz and sanidine crystals; 20-30% welded tuff fragments.	370-375	7271.6-7266.6
	Volcanic tuff, brownish gray (5YR 4/1), strongly welded. +10F: welded crystal tuff fragments composed of 50-60% quartz, sanidine, and minor ferromagnesian phenocrysts and trace felsic volcanic lithics in an aphanitic groundmass. +35F: 30-40% free quartz and sanidine crystals; 60-70% welded tuff fragments. WR sample: 50% pale light brownish gray fines; 50% welded tuff fragments.	375-385	7266.6-7256.6
	No cuttings returned; no sample available for examination.	385-390	7256.6-7251.6
	Volcanic tuff, medium gray (N5), strongly welded. +10F: welded crystal tuff fragments composed of 20-25% quartz, sanidine, and minor ferromagnesian phenocrysts and 1-2% volcanic lithics in an aphanitic groundmass. WR sample: yellowish gray, clayey.	390-410	7251.6-7231.6
	Volcanic tuff, light brownish gray (5YR 6/1), strongly welded. +10F: welded crystal tuff fragments composed of 30-40% quartz, sanidine, and minor ferromagnesian phenocrysts and 1-2% volcanic lithics (up to 2 mm) in an aphanitic groundmass. +35F: 50% free quartz and sanidine crystals; 50% welded tuff fragments. WR sample: 50% light brownish gray fines; 50% welded tuff fragments.	400-410	7231.6-7221.6
	No cuttings returned; no sample available for examination.	410-415	7221.6-7216.6
	Volcanic tuff, mottled coloration light brownish gray (5YR 6/1) to medium gray (N5), strongly welded. +10F: welded crystal tuff fragments composed of 40-50% quartz, sanidine, and minor ferromagnesian phenocrysts and 3-5% volcanic lithics (up to 3 mm) in an aphanitic groundmass. +35F: 50-60% free quartz and sanidine crystals; 40-50% welded tuff fragments.	415-425	7216.6-7206.6
	No cuttings returned; no sample available for examination.	425-430	7206.6-7201.6
	Volcanic tuff, medium gray (N5), strongly welded. +10F: 90% welded crystal tuff fragments made up of quartz, sanidine, and minor ferromagnesian phenocrysts (30-40% volume) and black and dark gray volcanic lithics (5-10% volume, up to 2 mm) in an aphanitic groundmass. Free lithic fragments (10% volume, up to 1.0 cm) composed of various intermediate volcanic rocks (up to 1.0 cm). +35F: 20-30% free quartz and sanidine crystals; 70-80% welded tuff fragments.	430-450	7201.6-7181.6
	Volcanic tuff, light brownish gray (5YR 6/1), strongly welded. +10F: welded crystal tuff fragments composed of 50-60% quartz, sanidine, and minor ferromagnesian phenocrysts and 20-30% medium gray (N5) volcanic lithics (up to 5 mm) in an aphanitic groundmass of welded ash. +35F: 40-50% free quartz and sanidine crystals; 50-60% welded tuff fragments.	450-465	7181.6-7166.6
Qbt 1v	No cuttings returned; interpreted to be Unit 1v	465-470	7166.6-7161.6

Lithologic Descriptions of Core and Drill Cuttings at Borehole R-26 (Continued)

Geologic Unit	Lithologic Description	Sample Interval (ft)	Elevation Range (ft above msl)
Qct, Cerro Toledo Interval	Volcanic tuff, light brownish gray (5YR 6/1), strongly welded. +10F: welded crystal tuff fragments composed of 50-60% quartz, sanidine, and minor ferromagnesian phenocrysts and 20-30% medium gray (N5) volcanic lithics (up to 5 mm) in an aphanitic groundmass of welded ash. WR sample: light grayish brown (5YR 6/1), 70-75% fines, 25-30% free quartz and sanidine crystals/welded tuff fragments. Note: base of Unit 1v of the Tshirege Member of the Bandelier Tuff and contact with underlying Cerro Toledo interval is interpreted to be at 472 ft bgs. This sample is likely contaminated with tuff fragments of the Bandelier Tuff from above.	470-475	7161.6-7156.6
	Volcanic tuff, light brownish gray (5YR 6/1), strongly welded. +10F: welded crystal tuff fragments composed of 50-60% quartz, sanidine, and minor ferromagnesian phenocrysts and 20-30% medium gray (N5) volcanic lithics (up to 5 mm) in an aphanitic groundmass of welded ash. WR sample: light grayish brown (5YR 6/1) 80-90% fines, 10-15% free quartz and sanidine crystals; 5-10% welded tuff fragments. This sample is likely contaminated with tuff fragments of the Bandelier Tuff from above.	475-485	7156.6-7146.6
	No cuttings returned; no sample available for examination.	485-490	7146.6-7141.6
	Volcaniclastic sediments, grayish orange pink (5YR 7/2), silty sand (SM), very fine to coarse sand, gravel clasts (5-10% volume, up to 6 mm) angular to subrounded, poor sample recovery. +10F: detrital constituents made up of welded tuff fragments and minor white cherts.	490-495	7141.6-7136.6
	Volcaniclastic sediments, grayish orange pink (5YR 7/2), silty sand with gravel (SM), very fine to coarse sand, gravel clasts (10-15% volume, up to 1.0 cm) subangular, poor sample recovery. +10F: detrital constituents composed of 5-10% welded tuff fragments, 10-15% white porphyritic rhyolite, 80-85% dacite, trace black vitrophyre.	495-500	7136.6-7131.6
	Insufficient sample recovery. Sample appears similar to that of interval 495-500 ft.	500-510	7131.6-7121.6
	No cuttings returned; no sample available for examination.	510-515	7121.6-7116.6
	Volcaniclastic sediments, very pale orange (10YR 8/2), gravelly silt (ML), very fine to medium sand, gravel clasts (15-20% volume, up to 1.0 cm) subangular to subrounded, commonly broken. +10F: detrital constituents composed of 75-85% porphyritic dacite, 10-15% vitrophyre of intermediate volcanic composition, 5-10% porphyritic rhyolite.	515-520	7116.6-7111.6
	No cuttings returned; no sample available for examination.	520-530	7111.6-7101.6
	Volcaniclastic sediments, medium light gray (N6) to yellowish gray (5Y 8/1), poorly graded gravel with silt and sand (GP-GM), fine to coarse sand, gravel clasts (0.5-5 cm) subangular to subrounded, commonly broken. +10F: detrital constituents composed of 40-50% hornblende-dacite, 40-50% other aphanitic rocks of intermediate volcanic composition, trace white vitric pumice, trace black vitrophyre (obsidian); clasts commonly stained with Fe-oxides.	530-545	7101.6-7086.6
	Volcaniclastic sediments, grayish orange (10YR 7/4), silty sand with gravel (SM), very fine to coarse sand, gravel clasts (up to 1.0 cm) angular to subrounded. +10F: varied detrital constituents composed mostly of porphyritic dacite and rhyolite; 1-2% obsidian, 1-2% flow-banded rhyolite; 8-15% gray and red-brown vitrophyre.	545-560	7086.6-7071.6
	Volcaniclastic sediments, grayish orange (10YR 7/4), silty sand (SM), very fine to coarse sand, gravel clasts (up to 1.0 cm) broken to subrounded. +10F: varied detrital constituents composed of hornblende-dacite, andesite, and black vitrophyre.	560-565	7071.6-7066.6
	No cuttings returned; no sample available for examination.	565-570	7066.6-7061.6

Lithologic Descriptions of Core and Drill Cuttings at Borehole R-26 (Continued)

Geologic Unit	Lithologic Description	Sample Interval (ft)	Elevation Range (ft above msl)
	Volcaniclastic sediments, very pale orange (10YR 8/2), poorly graded sand with gravel (SP), predominantly medium sand, gravel clasts (up to 8 mm) subangular to subrounded. +10F: detrital constituents composed of 50% white to pale orange pumices, partly vitric; 50% volcanic lithic clasts including dacite and gray aphanitic varieties of intermediate composition.	570-580	7061.6-7051.6
	Volcaniclastic sediments, very pale orange (10YR 8/2), silt with sand (ML), fine to coarse sand (15-20% volume) grains subangular to subrounded. +10F: coarse sand (less than 5 mm) made up of varied dacite, andesite, and quartz crystals. +35F: 60-70% quartz and sanidine crystals, 30-40% varied volcanic lithics, trace pumice.	580-595	7051.6-7036.6
	Volcaniclastic sediments, very pale orange (10YR 8/2), silty sand (SM). WR: fine to coarse sand composed of quartz and sanidine crystals plus volcanic lithic fragments.	595-600	7036.6-7031.6
	Volcaniclastic sediments, grayish orange (10YR 7/4), well-graded sand (SW) with silt, fine to very coarse sand grains subangular to rounded. +10F: very coarse sand composed of quartz and sanidine crystals and volcanic lithics (dacite, other intermediate volcanic rocks, welded tuff, vitrophyre).	600-615	7031.6-7016.6
	Volcaniclastic sediments, grayish orange (10YR 7/4), well-graded sand (SW) with gravel, fine to very coarse sand, gravel clasts (up to 1 cm) angular to subangular. +10F: detrital clasts dominantly dacite, lesser amounts of andesite, medium gray vitrophyre, and welded tuff; Fe-oxide staining of clasts common.	615-625	7016.6-7006.6
	Volcaniclastic sediments, very pale orange (10YR 8/2) to pale yellowish brown (10YR 6/2), well-graded sand (SW) with gravel, fine to very coarse sand, gravel clasts up to 2 cm. +10F: detrital clasts composed of varied volcanic constituents including indurated ash flow tuff, andesite, dacite, and vitrophyre.	625-645	7006.6-6986.6
	Volcaniclastic sediments, grayish orange (10YR 7/42), silty sand (SM) with gravel, fine to coarse sand, gravel clasts (up to 1.5 cm) are angular and broken. +10F: detrital clasts composed mainly of hornblende dacite with lesser amounts of porphyritic rhyolite, vitrophyre, and welded tuff.	645-655	6986.6-6976.6
	No cuttings returned; no sample available for examination.	655-660	6976.6-6971.6
	Volcaniclastic sediments, very pale orange (10YR 8/2) to pale yellowish brown (10YR 6/2), well-graded sand (SW) with gravel, very fine to very coarse sand, gravel clasts angular to rounded (up to 5 cm). +10F: detrital clasts composed of 80-85% vitric pumice and indurated ash-flow tuff fragments; 5-10% indurated sandstone clasts; and 5% volcanic rocks of intermediate composition.	660-680	6971.6-6951.6
	Volcaniclastic sediments, medium dark gray (N4) to medium light gray (N6), well-graded sand (SW), very fine to very coarse sand, gravel clasts (3-5% volume) generally broken (up to 1.0 cm). +10F: clasts composed of 80-90% hornblende-dacite, 3-5% andesite, 5-7% vitrophyre and trace white pumice; weak local Fe-oxide staining.	680-690	6951.6-6941.6
	Volcaniclastic sediments, pale yellowish brown (10YR 6/2) to grayish orange pink (5YR 7/2), well-graded sand (SW), very fine to coarse sand, gravel clasts (5-10% volume) angular to subangular. +10F: detrital clasts composed of 20-25% hornblende-dacite, 20-25% andesite, 30-40% brown vitreous pumice, 15-20% indurated ash-flow tuff fragments, 5-10% vitrophyre.	690-700	6941.6-6931.6
	Volcaniclastic sediments, varicolored grayish orange pink (5YR 7/2) to light brown (5YR 6/4), well graded sand (SW), very fine to coarse sand, gravel clasts (5-10% volume, up to 1 cm) angular to subangular. +10F: detrital pebbles composed of 20-25% hornblende-dacite, 20-25% andesite, 30-40% brown vitreous pumice, 15-20% indurated ash-flow tuff fragments, 5-10% vitrophyre.	700-710	6931.6-6921.6

Lithologic Descriptions of Core and Drill Cuttings at Borehole R-26 (Continued)

Geologic Unit	Lithologic Description	Sample Interval (ft)	Elevation Range (ft above msl)
	Volcaniclastic sediments, grayish orange pink (5YR 7/2),silt (ML). +10F: detrital pebbles (up to 1.2 cm) composed of 80-85% vitric pumice that is Fe-oxide +/or Mn-oxide stained and 15-20% varied volcanic lithics (i.e., hornblende-biotite-dacite, pumice, trace vitrophyre).	710-715	6921.6-6916.6
	Volcaniclastic sediments, light brown (5YR 6/4), silt (ML). +10F: subrounded to rounded pebbles (up to 1.0 cm) composed of 100% vitric pumice that is Fe-oxide +/or Mn-oxide stained.	715-720	6916.6-6911.6
	Volcaniclastic sediments, varicolored grayish orange pink (5YR 7/2) to medium gray (N5), fine to coarse sand (SW), gravel clasts (5-10% volume, up to 1.0 cm) generally broken . +10F: 80% varied volcanic lithics (i.e., hornblende-biotite-dacite, rhyolite, andesite, minor vitrophyre), 20% orange-colored vitric pumice. Note: percent detrital pumices increasing to 50-70% in lower 15 ft of the interval.	720-740	6911.6-6891.6
	Volcaniclastic sediments, grayish orange pink (5YR 8/4), silty sand (SM), predominantly fine sand. +10F: detrital clasts composed of 50-75% vitric pumice that is Fe-oxide +/or Mn-oxide stained and 25-50% varied volcanic lithics including rhyolite, hornblende-biotite-dacite, and vitrophyre.	740-755	6891.6-6876.6
	Volcaniclastic sediments, varicolored grayish orange pink (5YR 7/2) to medium gray (N5), clayey sand (SC), predominantly very coarse sand, gravel clasts (5% volume, 0.2-0.7 cm) are generally broken. +10F: detrital clasts composed of 60-70% orange pumice and 25-40% varied volcanic lithics including dark brown vitrophyre, rhyolite, and dacite. Note: increase in lithic content to 50% and increase in vitrophyre abundance at 760 ft.	755-765	6876.6-6866.6
	Volcaniclastic sediments, varicolored grayish orange pink (5YR 7/2) to medium gray (N5), clayey sand (SC), fine to medium sand, gravel clasts (5-10% volume, 0.2-1.1 cm) are generally broken. +10F: detrital clasts composed of 50-80% pumice and 20-50% varied volcanic lithics including dark brown vitrophyre, rhyolite, and dacite; local Mn-oxide staining on pumice clasts.	765-785	6866.6-6846.6
	Volcaniclastic sediments, grayish orange pink (5YR 8/4), silty sand (SM), predominantly fine sand. +10F: detrital clasts composed of 50-75% vitric pumice that is Fe-oxide +/or Mn-oxide stained and 25-50% varied volcanic lithics including rhyolite, hornblende-biotite-dacite, and vitrophyre.	785-800	6846.6-6831.6
	Volcaniclastic sediments, medium light gray (N6), sand (SW) with gravel, abundant broken gravel clasts (30-40% volume, 0.3-1.5 cm) exhibiting subrounded fresh surfaces. +10F: detrital clasts composed of varied volcanic lithics including rhyolite, andesite, hornblende-dacite, and vitrophyre.	800-815	6831.6-6816.6
	Volcaniclastic sediments, varicolored to light gray (N7), gravel (GW) with sand, medium to coarse sand, abundant broken gravel clasts (70% volume, 0.5-2.0 cm). +10F: detrital clasts composed of varied volcanic lithics including rhyolite, andesite, hornblende-biotite-dacite, vesicular basalt, and vitrophyre; local Fe-oxide staining of clasts.	815-825	6816.6-6806.6
	Volcaniclastic sediments, medium light gray (N6), sand with gravel (SW), fine to coarse sand, broken to subrounded gravel clasts (8% volume, 0.5-2.0 cm). +10F: detrital clasts composed of varied volcanic lithics including rhyolite, andesite, hornblende-biotite-dacite, vesicular basalt, and vitrophyre; local Fe-oxide staining of clasts.	825-840	6806.6-6791.6
	Volcaniclastic sediments, varicolored to medium light gray (N6), sand (SW) with gravel, fine to coarse sand, broken to subrounded gravel clasts (15% volume, 0.3-1.0 cm). +10F: detrital clasts composed of varied volcanic lithics including rhyolite, rhyodacite and vitrophyre with lesser pumice, andesite, and dacite; strong Fe-oxide staining of clasts.	840-845	6791.6-6786.6

Lithologic Descriptions of Core and Drill Cuttings at Borehole R-26 (Continued)

Geologic Unit	Lithologic Description	Sample Interval (ft)	Elevation Range (ft above msl)
	Volcaniclastic sediments, varicolored medium light gray (N6) to grayish orange pink (5YR 7/2), sand with clay and gravel (SP-SC), fine to coarse sand, broken to subrounded gravel clasts (8% volume, 0.3-1.3 cm). +10F: detrital clasts composed of orange sugary pumice (35-40% volume) and vitrophyre; other volcanic lithics (60-65% volume) include rhyolite, andesite, and hornblende-biotite-dacite; local Fe-oxide and Mn-oxide staining of pumices.	845-850	6786.6-6781.6
	Volcaniclastic sediments, varicolored grayish orange pink (5YR 7/2) to medium light gray (N6), clayey (SC), very fine to coarse sand, broken to subrounded gravel clasts (15% volume, 0.3-0.8 cm). +10F: detrital clasts composed of 60% pumice and 40% volcanic lithics including porphyritic andesite, hornblende-biotite-dacite, and vitrophyre; local Fe-oxide staining of pumice clasts.	850-860	6781.6-6771.6
	No cuttings returned; no sample available for examination.	860-865	6771.6-6766.6
Qbo, Otowi Member of the Bandelier Tuff	Volcanic tuff, grayish orange pink (5YR 7/2) to light gray (N6), poorly welded. +10F: composed of 50% orange vitric pumice, 50% lithic fragments (up to 1.5 cm) including dacite, andesite and lesser vitrophyre. +35F: 15-20% pumice fragments, 70-75% quartz and sanidine crystals, and 10-15% lithics.	865-870	6766.6-6761.6
	Volcanic tuff, grayish orange pink (5YR 7/2) to light gray (N6), poorly welded. +10F: composed of 50-80% white pumice, 20-50% lithic fragments including vitrophyre, biotite-dacite, and andesitic vitrophyre. +35F: 10-15% pumice fragments, 70-75% quartz and sanidine crystals, and 10-15% lithics.	870-900	6761.6-6731.6
	No cuttings returned; no sample available for examination.	900-905	6731.6-6726.6
	Volcanic tuff, very light gray (N8) to medium dark gray (N4), poorly welded, lithic-rich. +10F: composed mostly of lithic fragments including andesite, vitrophyre, rhyolite, porphyritic dacite and minor pumice. +35F: 10-15% pumice fragments, 60-65% quartz and sanidine crystals, and 20-25% lithics.	905-910	6726.6-6721.6
	Volcanic tuff, very light gray (N8), poorly welded. +10F: very little sample return. +35F: 2-5% pumice fragments, 70-75% quartz and sanidine crystals, and 25-30% lithics.	910-920	6721.6-6711.6
	Volcanic tuff, very light gray (N8) to grayish orange pink (5YR 7/2), poorly welded, broken fragments up to 0.7 cm. +10F: very little sample return. +35F: 40% pumice fragments, 30% quartz and sanidine crystals, and 30% lithics.	920-930	6711.6-6701.6
Qbog, Guaje Pumice Bed	Volcanic tuff, pinkish gray (5YR 8/1), poorly welded to nonwelded, broken fragments up to 2.2 cm. WR sample: has texture of clayey sand. +10F: very little sample returns. +35F: 50-60% pumice fragments, 25-30% quartz and sanidine crystals, and 10-15% volcanic lithics.	930-935	6701.6-6696.6
	Volcanic tuff, pinkish gray (5YR 8/1) to grayish red (10R 4/2), nonwelded, lithic-rich. +10F: contains variety of lithic fragments (0.3-0.6 cm) including altered andesite, white vitric and Fe-oxide-stained pumice, and hornblende-biotite-dacite. +35F: 40-45% pumice fragments, 40-45% quartz and sanidine crystals, and 10% volcanic lithics.	935-940	6696.6-6691.6
	Volcanic tuff, pinkish gray (5YR 8/1) to grayish red (10R 4/2), nonwelded, lithic-rich. +10F: contains variety of lithic fragments (0.3-0.6 cm) including altered andesite, white vitric and Fe-oxide-stained pumice, and hornblende-biotite-dacite. +35F: 40-45% pumice fragments, 40-45% quartz and sanidine crystals, and 10-50% volcanic lithics.	940-945	6691.6-6686.6
	Volcanic tuff, very light gray (N8), nonwelded, pumice-rich. +10F: very little sample returns +35F: mostly pumice fragments, 35% quartz and sanidine crystals, minor lithic fragments. Increase in lithic fragments noted in interval 110-115 ft.	945-950	6686.6-6681.6

Lithologic Descriptions of Core and Drill Cuttings at Borehole R-26 (Continued)

Geologic Unit	Lithologic Description	Sample Interval (ft)	Elevation Range (ft above msl)
Tpf, Puye Fanglomerate	Volcanic tuff, very light gray (N8) to white (N9), pumice-rich, lithic-rich, moderately welded, vitric. +10F: 70-75% white vitric pumice fragments, 25-30% lithic (vitrophyre, dacite, andesite, rhyolite) fragments. +35F: 60-65% vitric pumice fragments, 25-30% quartz and sanidine crystals, 5-10% lithic fragments. Probable Guaje Pumice Bed contamination from above. **Note: base of Guaje Pumice Bed and contact with underlying Puye Formation is interpreted to be at 955 ft bgs.**	950-960	6681.6-6671.6
	Volcaniclastic sediments, light brownish gray (5YR 6/1), sand with silt and clay (SP-SM). +10F: no sample returns. +35F: 25-30% pumice, 30-35% quartz and sanidine crystals, 40-45% volcanic lithic fragments.	960-965	6671.6-6666.6
	Volcaniclastic sediments, light brownish gray (5YR 6/1), sand with silt and clay (SP-SM), very fine to coarse sand, gravel clasts up to 1.8 cm. +10F: very little sample returns. +35F: 65% lithic fragments including porphyritic dacite, andesite, rhyodacite and vitrophyre. Note: reddish brown clay at 975 ft bgs.	965-980	6666.6-6651.6
	Volcaniclastic sediments, light brownish gray (5YR 6/1), sand with silt and clay (SP-SM). +10F: no sample return. +35F: 80% hornblende-biotite-plagioclase dacite, 20% other volcanic lithics (andesite, vitrophyre, rhyodacite, minor pumice).	980-985	6651.6-6646.6
	Volcaniclastic sediments, varicolored to pale yellowish brownish (10YR 6/2), poorly graded sand with silt and gravel (SP-SM), subrounded to broken clasts up to 0.7 cm. +10F: varied volcanic lithics including vitrophyre, dacite, andesite, trace rhyodacite, and poorly welded ash flow tuff.	985-990	6646.6-6641.6
	Volcaniclastic sediments, varicolored to pale yellowish brownish (10YR 6/2), poorly graded sand with silt and gravel (SP-SM), subrounded to broken clasts up to 0.7 cm. +10F: mainly dacite with lesser amounts of vitrophyre, andesite, trace rhyodacite, and poorly welded ash flow tuff.	990-1000	6641.6-6631.6
	No cuttings returned; no sample available for examination.	1000-1005	6631.6-6626.6
	Volcaniclastic sediments, varicolored to pale yellowish brownish (10YR 6/2), poorly graded sand (SP), coarse sand grains subangular to subrounded. +10F: grains (up to 5 mm) dacite, rhyodacite, and andesite. +35F: 80-85% dacite and rhyodacite, 15-20% quartz and sanidine crystals.	1005-1025	6626.6-6606.6
	Volcaniclastic sediments, moderate yellowish brown (10YR 4/2), silty, clayey sand (SC-SM), angular grains up to 5 mm. +10F: grains dominantly composed of dacite with other volcanics of intermediate composition. +35F: grains similar in composition to that of +10F.	1025-1040	6606.6-6591.6
	Volcaniclastic sediments, moderate reddish brown (10YR 4/6), silty, clayey sand (SC-SM), angular grains up to 5 mm. +10F: grains dominantly composed of hornblende-biotite-dacite with other volcanics of intermediate composition. +35F: grains similar in composition to that of +10F sample.	1040-1050	6591.6-6581.6
	Volcaniclastic sediments, pale yellowish brown (10YR 6/2), well graded sand (SW) with clay, angular to subrounded grains up to 5 mm. +10F: grains dominantly composed of hornblende-dacite and porphyritic rhyolite, Fe-oxide staining common. +35F: grains similar in composition to that of +10F sample.	1050-1055	6581.6-6576.6
	Volcaniclastic sediments, pale yellowish brown (10YR 6/2), well graded sand (SW) with clay, angular to subrounded grains up to 5 mm. +10F: grains composed of dacite, andesite, vitrophyre, trace white chert. +35F: grains similar in composition to that of +10F sample.	1055-1075	6576.6-6556.6
	Volcaniclastic sediments, light brownish gray (5YR 6/1), poorly graded sand with silt (SP-SM), very fine to fine sand, angular to subrounded grains up to 5 mm. +10F: grains composed of andesite, dacite, vitrophyre; 2-5% Fe-oxide staining. +35F: grains similar in composition to that of +10F sample.	1075-1090	6556.6-6541.6

Lithologic Descriptions of Core and Drill Cuttings at Borehole R-26 (Continued)

Geologic Unit	Lithologic Description	Sample Interval (ft)	Elevation Range (ft above msl)
	Volcaniclastic sediments, light brownish gray (5YR 6/1), poorly graded sand with silt (SP-SM), very fine to fine sand, angular to subrounded grains up to 5 mm. +10F: (very little sample returns) grains composed of andesite, dacite, vitrophyre; 2-5% Fe-oxide staining. +35F: grains of similar in composition to that of +10F sample, minor pale yellow orange chert fragments.	1090-1105	6541.6-6526.6
	Volcaniclastic sediments, pale yellowish brown (10YR 6/2), poorly graded sand with silt (SP-SM), very fine to fine sand, grains angular to subrounded. +10F: grains composed of andesite, dacite, and orange-pink clay-altered pumice and/or indurated tuff.	1105-1115	6526.6-6516.6
	Volcaniclastic sediments, pale yellowish brown (10YR 6/2), poorly graded sand with silt (SP-SM), very fine to fine sand, grains angular to subrounded. +10F: grains composed of andesite and dacite with significantly increased abundance (60-70% volume) of orange-pink clay-altered biotite-bearing tuff; minor well-indurated sandstone clasts. Note: poor sample returns for +10F in the interval 1120-1125 ft bgs.	1115-1125	6516.6-6506.6
	Volcaniclastic sediments, pale yellowish brown (10YR 6/2), poorly graded sand (SP), very fine to fine sand, grains angular to subangular. +10F: (poor sample returns) grains composed of dacite, other intermediate volcanic rocks, with tuff fragments. +35F: similar in composition to that of +10F: sample.	1125-1145	6506.6-6486.6
	Volcaniclastic sediments, pale brown (5YR 5/2), poorly graded sand with silt (SP-SM), very fine to fine sand, grains angular to subrounded. +10F: grains composed of varied volcanic constituents including dacite, andesite, vitrophyre, porphyritic rhyolite, and white biotite-bearing tuff. Note: poor sample returns for +10F at 1150 to 1165 ft bgs.	1145-1165	6486.6-6466.6
	Volcaniclastic sediments, pale yellowish brown (10YR 6/2), poorly graded sand (SP), fine sand grains angular to subangular. +10F: grains composed of dacite, porphyritic rhyolite, orange and white tuff fragments, and indurated sandstone. +35F: similar composition to +10F sample.	1165-1180	6466.6-6451.6
	Volcaniclastic sediments, pale yellowish brown (10YR 6/2), poorly graded sand with silt (SP-SM), fine sand grains angular to subangular. +10F: no sample returns. +35F: grains composed of intermediate volcanics and vitrophyre.	1180-1195	6451.6-6436.6
	Volcaniclastic sediments, light brownish gray (5YR 6/1), poorly graded sand (SP), very fine to fine sand grains mostly angular. +10F: grains composed of hornblende-dacite and trace porphyritic rhyolite. +35F: angular intermediate volcanic grains.	1195-1200	6436.6-6431.6
	Volcaniclastic sediments, grayish orange pink (5YR 7/2), poorly graded sand (SP), fine sand grains angular to subangular. +10F: (poor sample returns) grains composed of intermediate volcanic rocks, obsidian, quartz, altered tuff. Note: sample lacking in obsidian in the interval 1205-1210 ft bgs.	1200-1210	6431.6-6421.6
	Volcaniclastic sediments, grayish orange pink (5YR 7/2), poorly graded sand with silt (SP-SM), very fine to fine sand grains mostly angular. +10F: (poor sample returns) grains composed of intermediate volcanic rocks. +35F: similar in composition to that of +10F: sample.	1210-1225	6421.6-6406.6
	Volcaniclastic sediments, pale yellowish brown (10YR 6/2), poorly graded sand (SP) to sand with silt (SP-SM), very fine to fine sand grains mostly angular. +10F: very little sample returns. +35F: grains composed of intermediate volcanic rocks.	1225-1255	6406.6-6376.6
	Volcaniclastic sediments, pale yellowish brown (5YR 6/1), poorly graded sand (SP) to sand with silt (SP-SM), very fine to fine sand grains angular to subangular (up to 5 mm). +10F: grains composed predominantly of intermediate volcanic composition. +35F: grains composed of dacite and intermediate volcanic rocks, trace quartz. Note: poor sample returns for +10F at 1260 to 1280 ft bgs.	1255-1285	6376.6-6346.6

Lithologic Descriptions of Core and Drill Cuttings at Borehole R-26 (Continued)

Geologic Unit	Lithologic Description	Sample Interval (ft)	Elevation Range (ft above msl)
	Volcaniclastic sediments, brownish gray (5YR 4/1) to pale brown (5YR 5/2), poorly graded sand (SP), fine to medium sand grains angular to subangular. +10F: no sample returns. +35F: grains of intermediate and felsic volcanic composition, minor abundances of quartz and vitrophyre.	1285-1305	6346.6-6326.6
	Volcaniclastic sediments, pale brown (5YR 5/2) to pale yellowish brown (10YR 6/2), poorly graded sand (SP), very fine to fine sand, grains angular to subangular. +10F: no sample returns. +35F: grains of intermediate and felsic volcanic composition.	1305-1330	6326.6-6301.6
	Volcaniclastic sediments, pale brown (5YR 5/2) to pale yellowish brown (10YR 6/2), poorly graded sand (SP), fine to medium sand, grains angular to subangular. +10F: poor sample returns. +35F: light-colored grains of intermediate and felsic volcanic composition.	1330-1360	6301.6-6271.6
	Volcaniclastic sediments, pale yellowish brown (10YR 6/2), poorly graded sand with silt (SP-SM), very fine to fine sand, grains angular to subangular. +10F: very poor sample returns. +35F: light-colored grains of intermediate and felsic volcanic composition.	1360-1380	6271.6-6251.6
	Volcaniclastic sediments, pale yellowish brown (10YR 6/2), poorly graded sand (SP), very fine to fine sand, grains angular to subangular. +10F: very poor sample returns; reddish brown clay noted at 1395 to 1400 ft bgs. +35F: light-colored grains of intermediate and felsic volcanic composition.	1380-1400	6251.6-6231.6
	Volcaniclastic sediments, light brownish gray (5YR 6/1), poorly graded sand (SP), fine to medium sand, grains angular to subangular (up to 3 mm). +10F: (poor sample returns) grains composed of intermediate volcanic rocks; trace reddish brown clay. +35F: grains of intermediate and felsic volcanic composition, vitrophyre, altered volcanic tuff.	1400-1405	6231.6-6226.6
	Volcaniclastic sediments, light brownish gray (5YR 6/1), poorly graded sand (SP), very fine to fine sand, grains angular to subangular. +10F: poor sample returns. +35F: grains of intermediate and felsic volcanic composition, vitrophyre, altered volcanic tuff.	1405-1420	6226.6-6221.6
	Volcaniclastic sediments, light brownish gray (5YR 6/1), poorly graded sand with silt (SP-SM), very fine to fine sand, grains angular to subangular. +10F: poor sample returns. +35F: grains predominantly of intermediate and felsic volcanic composition.	1420-1430	6221.6-6211.6
	No cuttings returned; no sample available for examination.	1430-1440	6211.6-6201.6
	Volcaniclastic sediments, grayish orange pink (5YR 7/2), poorly graded sand with silt (SP-SM), very fine to fine sand, grains angular to subangular. +10F: grains composed of intermediate volcanic composition and minor gray-orange indurated sandstone. +35F: grains of similar in composition to that of +10F: sample with trace vitrophyre.	1440-1445	6201.6-6196.6
	Volcaniclastic sediments, light brownish gray (5YR 6/1), well graded sand (SW), very fine to medium sand, grains angular to subrounded (up to 3 mm). +10F: grains composed of light gray and orange-pink hornblende-dacite intermediate volcanic composition and minor gray-orange indurated sandstone. +35F: grains of similar in composition to that of +10F: sample.	1445-1455	6196.6-6186.6
	Volcaniclastic sediments, light brownish gray (5YR 6/1), poorly graded sand (SP), very fine to fine sand, grains angular to subangular. +10F: grains composed of light gray and orange-pink hornblende-dacite intermediate volcanic composition. +35F: grains of dacite, other intermediate volcanics, vitrophyre, and indurated tuff.	1455-1460	6186.6-6181.6
	Volcaniclastic sediments, light gray (N8), poorly graded sand (SP), very fine to medium sand, grains angular to subangular. +10F: grains composed of dacite and other intermediate volcanic composition. +35F: grains of hornblende-biotite-dacite, other intermediate volcanics, vitrophyre, and indurated tuff.	1460-1490.5	6181.6-6151.1
	TOTAL BOREHOLE DEPTH (TD) IS AT 1,490.5 FT BGS.		

Lithologic Descriptions of Core and Drill Cuttings at Borehole R-26 (Continued)

Geologic Unit	Lithologic Description	Sample Interval (ft)	Elevation Range (ft above msl)

GW Well-graded gravel
GP Poorly graded gravel
GM Silty gravel
SW Well-graded sand
SP Poorly graded sand
SM Silty sand
SC Clayey sand
GP-GM Poorly graded gravel with silt to silty gravel, transitional
SP-SC Poorly graded sand with clay to clayey sand, transitional
SP-SM Poorly graded sand with silt to silty sand, transitional
SC-SM Clayey sand to silty sand, transitional

REFERENCE

ASTM D 2488-90. Standard Practice and Identification of Soils (Visual-Manual Procedure)

Note: The term "per cent" (%), as used in the above descriptions, refers to relative abundance by volume for a given sample component.

Note: Contact locations are based on cuttings retrieval. There is general agreement between this borehole log and the geophysics report.

Note: Grain size descriptions are based on analysis of the cuttings. FMI logs indicate that a much larger grain size is present throughout much of the Puye Formation.

Appendix E

Aquifer Testing Report and
Aquifer Test Data

R-26 PUMPING TEST ANALYSIS

INTRODUCTION

This section describes the analysis of constant-rate pumping tests and shut-in tests conducted on R-26. The primary objective of the analysis was to determine the hydraulic properties of the sediments screened in R-26.

R-26 is completed with two screens, one installed from 651.8 to 669.9 ft bgs (Screen 1) and one from 1421.8 to 1445 ft bgs (Screen 2). Prior to testing, a snug fitting packer had been installed beneath Screen 1 to hydraulically separate the shallow and deep screen zones. The packer was not an inflatable packer, but rather was constructed with a solid neoprene ring bonded to a steel coupling. It was not designed for high-pressure applications and, therefore, provided only partial resistance to movement of water between the screen zones.

With the packer in place, the static water level measured in Screen 1 was approximately 607 ft bgs. When the packer was removed to allow a camera survey of the well, the resulting *composite* water level revealed by the down-hole camera was also 607 ft bgs. The lack of a discernable water level change suggested that the deep zone was exceedingly tight compared to the upper zone and, thus, the upper zone dominated the hydraulics of the combined system. The testing program for R-26 was designed around this assumption.

Three tests were conducted on R-26, one test on Screen 1 and two tests on Screen 2. Screen 1 was tested using conventional constant-rate pumping and recovery procedures. During this testing, the well was open to both zones, because it was believed that the deep zone would have negligible effect on the hydraulic response (subsequently confirmed). Screen 2 was tested initially by shutting it in and pumping it briefly. The information from this preliminary test was used to design a long-term isolation test.

Testing of Screen 1 (both zones open) began on February 16, 2004. The test consisted of two trial pumping periods, a day and a half shut down for background monitoring, 24 hours of pumping and 24 hours of recovery. An inflatable packer was set above Screen 1 to eliminate casing storage effects during the tests. The packer was installed at approximately 635 ft bgs. The pump was positioned well below the packer, with the bottom of the pump shroud at approximately 780 ft bgs. This design was incorporated in anticipation of preliminary testing of Screen 2, which was planned to immediately follow the Screen 1 test.

Two trial tests were conducted in Screen 1 on February 16. Trial 1 was conducted at a rate of 16 gpm for 72 minutes from 3:52 pm to 5:04 pm, and was followed by 28 minutes of recovery. Trial 2 was conducted at a rate of 16 gpm for 31 minutes form 5:32 pm to 6:03 pm. Following this test, recovery was monitored for more than a day and a half from 6:02 pm on February 16 until 8:36 am on February 18. This data set served as recovery for the trial 2 test and as background data.

The 24-hour test on Screen 1 was begun at a rate of 15.7 gpm at 8:36 am on February 18. By mid-afternoon, it was observed that the pumping rate was declining steadily (to less than 15 gpm) and that the gauge pressure in the discharge line was also declining. The only explanation for these simultaneous observations was that the drawdown in the well was increasing

substantially – possibly to a level well below the bottom of the screen. (Note that it was not possible to monitor the pumping water level during the test when using the inflatable packer and isolated down-hole MiniTROLL pressure transducer, so it was necessary to infer what was occurring from the available indirect evidence.) Based on the observed reductions in pumping rate and discharge line pressure, it was concluded that the well screen had become dewatered and that the drawdown would continue to increase, unchecked, until the pump cavitated.

Therefore, the pump was shut off at 6:01 pm for 61 minutes and restarted at 7:02 pm at a reduced rate of 7 gpm. During the temporary shut down, the packer was deflated and re-inflated to release any air that may have entered the well through the well screen. Pumping continued until 8:50 am on February 19. By the end of the pumping period, the discharge rate had declined to 6.8 gpm. Following pump shutdown, recovery measurements were made for 1465 minutes until 9:15 am on February 20.

The 24-hour Screen 1 pumping test procedures are summarized as follows:

1. Pumped at 15.7 gpm (eventually declining to 14.8 gpm) for 565 minutes from 8:36 am to 6:01 pm on February 18.
2. Shut down for 61 minutes from 6:01 pm to 7:02 pm.
3. Pumped at 7.0 gpm (declining to 6.8 gpm) for 828 minutes from 7:02 pm February 18 to 8:50 am February 19.
4. Monitored recovery from 8:50 am February 19 to 9:15 am February 20.

The Screen 2 testing occurred in two phases – a preliminary shut-in and brief pumping event, and long-term isolation and monitoring. The preliminary test was run on February 20 and was accomplished with the pump and packer string used to test Screen 1. To test Screen 2, the pump/packer string was lowered 105 feet, placing the packer and the bottom of the pump shroud at approximately 740 feet and 885 ft bgs, respectively. Testing consisted of setting the packer, monitoring shut-in head for 52 minutes, pumping for 15 minutes, shutting down and monitoring for an additional 53 minutes.

The packer was inflated at 11:22 am. After 52 minutes, the pump was started at 12:14 pm. It was expected that Screen 2 would produce little flow and that most of the pumped water would come from casing storage between the inflatable packer and the top of the pump – an available water volume of about 78 gallons. After 15 minutes of pumping, cavitation occurred and the pump was shut down at 12:29 pm. Monitoring continued for another 53 minutes until 1:22 pm, when the packer was deflated. A total water volume of 58 gallons was removed from the well during pumping – 18 gallons less than the volume drained from casing storage. It is probable that antecedent drainage of a portion of the drop pipe had emptied about 18 gallons of volume, and the pump had to refill the drained volume before discharge reached the surface. Consistent with this, when the pump was started, only air was produced at the surface for the first couple of minutes of operation.

Results of the preliminary test were used to guide the choice of final testing procedures for Screen 2. The preliminary test confirmed that the deep zone yield was exceedingly low and that the zone would not support continuous pumping. It also showed that the deep zone static water level was significantly below that of the upper screened zone. Based on this information, the

decision was made to simply isolate Screen 2 using the inflatable packer and monitor the decay response of the water levels following packer inflation.

The submersible pump used to test Screens 1 and 2 was removed and an inflatable packer was re-run into R-26 to a depth of about 713 feet, with a 1 7/8-inch OD tailpipe (stinger pipe) extending to around 720 feet. The packer was inflated at 2:20 pm on February 22. Water levels were monitored until 8:00 am on March 6, providing a data record of 12.7 days duration.

BACKGROUND DATA

The background water level data collected in conjunction with running the pumping test allow the analyst to see what water level fluctuations occur naturally in the aquifer and help distinguish between water level changes caused by conducting the pumping test and changes associated with other causes.

Background water level fluctuations have several causes, among them barometric pressure changes, operation of other wells in the aquifer, earth tides, and long-term trends related to weather patterns. The background data hydrograph from the R-26 tests was compared to barometric pressure data from the area to determine if a correlation existed.

Previous pumping tests have demonstrated a barometric efficiency for most wells of between 90 and 100 percent. Barometric efficiency is defined as the ratio of water level change to barometric pressure change, expressed as a percentage. In the early pumping tests conducted as part of this project, down hole pressure was monitored using a *vented* transducer. This equipment measures the *difference* between the total absolute pressure applied to the transducer and the barometric pressure, this difference being the true height of water above the transducer.

Later pumping tests in the project, including the R-26 pumping test, utilized a *non-vented* transducer for the background monitoring. This device simply records the total absolute pressure on the transducer, that is, the sum of the water height plus the barometric pressure. This results in an attenuated "apparent" hydrograph in a barometrically efficient well. Take as an example a 90 percent barometrically efficient well. When monitored using a vented transducer, an *increase* in barometric pressure of 1 unit causes a *decrease* in recorded down-hole pressure of 0.9 units, because the water level is forced downward 0.9 units by the barometric pressure change. However, using a non-vented transducer, the total measured pressure *increases* by 0.1 units (the combination of the barometric pressure increase and the water level decrease). Thus, the resulting apparent hydrograph changes by a factor of 100 minus the barometric efficiency, and in the same direction as the barometric pressure change, rather than in the opposite direction.

When the non-vented transducer is used in combination with an inflatable packer, the output is the same as what would be measured without the packer. Because the packer isolates the water in the well from atmospheric pressure, the changing barometric pressure has no direct effect on the water level. The only effect is the indirect effect on the aquifer as a whole. Using the example of a 90 percent barometrically efficient well, an increase in barometric pressure of 1 unit would cause a general aquifer pressure increase of 0.1 units (100 percent minus the barometric efficiency). Thus, the barometric effect is muted and, again, the "apparent" water level hydrograph recorded by the non-vented transducer in conjunction with an inflatable packer is indistinguishable from that recorded by a non-vented transducer without an inflatable packer.

Barometric pressure data were obtained from the Los Alamos National Laboratory TA-54 tower site from RRES-Meteorology and Air Quality. The TA-54 measurement location is at an elevation of 6548 feet above mean sea level (amsl), whereas the wellhead elevation is 7642 feet amsl. Furthermore, the static water level in R-26 was about 607 ft bgs, making the water table elevation 7035 feet amsl. Therefore, the measured barometric pressure data from TA-54 had to be adjusted to reflect the pressure at the elevation of the water table within R-26.

The following formula was used to adjust the measured barometric pressure data:

$$P_{WT} = P_{TA54} \exp\left[-\frac{g}{3.281R}\left(\frac{E_{R26} - E_{TA54}}{T_{TA54}} + \frac{E_{WT} - E_{R26}}{T_{WELL}} \right) \right]$$

where,

P_{WT} = barometric pressure at the water table inside R4
P_{TA54} = barometric pressure measured at TA-54
g = acceleration of gravity, in m/sec^2 (9.80665 m/sec^2)
R = gas constant, in J/Kg/degree Kelvin (287.04 J/Kg/degree Kelvin)
E_{R26} = land surface elevation at R-26, in feet (7642 feet)
E_{TA54} = elevation of barometric pressure measuring point at TA-54, in feet (6548 feet)
E_{WT} = elevation of the water level in R-26, in feet (7035 feet)
T_{TA54} = air temperature near TA-54, in degrees Kelvin (assigned a value of 33 degrees Fahrenheit, or 273.7 degrees Kelvin)
T_{WELL} = air temperature inside R-26, in degrees Kelvin (assigned a value of 63 degrees Fahrenheit, or 290.4 degrees Kelvin)

This formula is an adaptation of an equation provided by RRES-Meteorology and Air Quality. It can be derived from the ideal gas law and standard physics principles. An inherent assumption in the derivation of the equation is that the air temperature between TA-54 and the well is temporally and spatially constant, and that the temperature of the air column in the well is similarly constant.

The corrected barometric pressure data reflecting pressure conditions at the water table were compared to the apparent water level hydrograph to discern the correlation between the two.

THICK AQUIFER RESPONSE

A complicating aspect of the R-well pumping tests is that the wells are partially penetrating. The typical well design incorporates a relatively short well screen (a few feet to tens of feet in length) installed within a massively thick aquifer (many hundreds of feet or more).

As a result, during pumping, the cone of depression expands not only horizontally, but also vertically, throughout the test. As the cone intercepts a greater and greater aquifer thickness, the data plot reflects a steadily flattening slope, corresponding to the continuously increasing vertical height of the zone of investigation. As a result, later data tend to produce a greater calculated

transmissivity than do early data. This complicates the analysis because, for any given slope (or transmissivity value), it is not possible to know what the corresponding aquifer thickness is (vertical extent of the cone of depression).

If an aquitard is encountered at depth, limiting the vertical growth of the cone of depression, the data curve may reach a steady slope, reflecting the transmissivity of the sediments above the aquitard. In that case, a definitive transmissivity can be determined and the hydraulic conductivity can be calculated by dividing the transmissivity by the saturated thickness above the aquitard (if that dimension is known). If no aquitard is encountered, the drawdown curve gets steadily flatter, reflecting a continuum of transmissivities corresponding to the effective depth of the cone of depression at any given time.

Importance of Early Data

When pumping or recovery first begins, the vertical extent of the cone of depression is limited to approximately the well screen length. For most R-well pumping tests, these first few moments of pumping are the only time that the effective height of the cone of depression is known with certainty. Thus, the early data potentially offer the best opportunity to obtain hydraulic conductivity information, because conductivity would equal the earliest-time transmissivity divided by the well screen length.

Unfortunately, in the R-wells, casing storage effects dominate the early-time data, hindering the effort to determine the transmissivity of the screened interval. The duration of casing storage effects can be estimated using the following equation (Schafer, 1978).

$$t_c = \frac{0.6\left(D^2 - d^2\right)}{\frac{Q}{s}}$$

where,

t_c = duration of casing storage effect, in minutes
D = inside diameter of well casing, in inches
d = outside diameter of column pipe, in inches
Q = discharge rate, in gpm
s = drawdown observed in pumped well at time t_c, in feet

In some instances, it may be possible to eliminate casing storage effects by setting an inflatable packer above the tested screen interval prior to conducting the test. Therefore, this option was implemented for the R-26 pumping test. As described later, using the packer was effective at preventing casing drainage during the test, thereby eliminating casing storage effects.

TIME-DRAWDOWN METHODS

Time-drawdown data can be analyzed using a variety of methods. Among them is the Theis method. The Theis equation describes drawdown around a well as follows:

$$s = \frac{114.6Q}{T}W(u) \qquad (1)$$

where,

$$W(u) = \int_{u}^{\infty} \frac{e^{-x}}{x} dx \qquad (2)$$

and

$$u = \frac{1.87 r^2 S}{Tt} \qquad (3)$$

and where,

s = drawdown, in feet
Q = discharge rate, in gpm
T = transmissivity, in gpd/ft
S = storage coefficient (dimensionless)
t = pumping time, in days
r = distance from center of pumpage, in feet

To use the Theis method of analysis, the time-drawdown data are plotted on log-log graph paper. Then, Theis curve matching is performed using the Theis type curve – a plot of the Theis well function $W(u)$ versus $1/u$. Curve matching is accomplished by overlaying the type curve on the data plot and, while keeping the coordinate axes of the two plots parallel, shifting the data plot to align with the type curve, effecting a match position. An arbitrary point, referred to as the match point, is selected from the overlapping parts of the plots. Match point coordinates are recorded from the two graphs, yielding four values – $W(u)$, $1/u$, s, and t. Using these match point values, transmissivity and storage coefficient are computed as follows:

$$T = \frac{114.6Q}{s} W(u) \qquad (4)$$

$$S = \frac{Tut}{2693 r^2} \qquad (5)$$

where,

T = transmissivity, in gpd/ft
S = storage coefficient
Q = discharge rate, in gpm
$W(u)$ = match point value
s = match point value, in feet
u = match point value
t = match point value, in minutes

An alternative solution method applicable to time-drawdown data is the Cooper-Jacob method (1946), a simplification of the Theis equation (1935) that is mathematically equivalent to the

Theis equation for most pumped well data. The Cooper-Jacob equation describes drawdown around a pumping well as follows:

$$s = \frac{264Q}{T}\log\frac{0.3Tt}{r^2S} \qquad (6)$$

where,

s = drawdown, in feet
Q = discharge rate, in gpm
T = transmissivity, in gpd/ft
t = pumping time, in days
r = distance from center of pumpage, in feet
S = storage coefficient (dimensionless)

The Cooper-Jacob equation is a simplified approximation of the Theis equation and is valid whenever the u value is less than about 0.05.

For small radius values (e.g., corresponding to borehole radii), u is less than 0.05 at very early pumping times and, therefore, is less than 0.05 for nearly all measured drawdown values. Thus, for pumped wells, the Cooper-Jacob equation usually can be considered a valid approximation of the Theis equation. (Note: an exception to this can occur when the transmissivity is exceedingly low. If the transmissivity is sufficiently small, some of the very early time measurements may not meet the u-value criterion.)

According to the Cooper-Jacob method, the time-drawdown data are plotted on a semilog graph, with time plotted on the logarithmic scale. Then a straight line of best fit is constructed through the data points and transmissivity is calculated using:

$$T = \frac{264Q}{\Delta s} \qquad (7)$$

where,

T = transmissivity, in gpd/ft
Q = discharge rate, in gpm
Δs = change in head over one log cycle of the graph, in feet

Because the R-wells are severely partially penetrating, another solution considered for determining aquifer parameters is the Hantush equation for partially penetrating wells (1961a, b). The Hantush equation is as follows:

$$s = \frac{Q}{4\pi T}\left(W(u) + \frac{2b^2}{\pi^2(l-d)(l'-d')}\sum_{n=1}^{\infty}\frac{1}{n^2}\left[\sin\frac{n\pi l}{b} - \sin\frac{n\pi d}{b}\right]\left[\sin\frac{n\pi l'}{b} - \sin\frac{n\pi d'}{b}\right]W\left(u, \sqrt{\frac{K_z}{K_r}}\frac{n\pi r}{b}\right)\right) \qquad (8)$$

where, in consistent units, s, Q, T, t, r, S, and u are as previously defined and

b = aquifer thickness
d = distance from top of aquifer to top of well screen in pumped well
l = distance from top of aquifer to bottom of well screen in pumped well
d' = distance from top of aquifer to top of well screen in observation well
l' = distance from top of aquifer to bottom of well screen in observation well
K_z = vertical hydraulic conductivity
K_r = horizontal hydraulic conductivity

In this equation, $W(u)$ is the Theis well function and $W(u,\beta)$ is the Hantush well function for leaky aquifers. For single-well tests, $d = d'$ and $l = l'$.

RECOVERY METHODS

Recovery data were analyzed by the several methods. One of the methods used was the Theis Recovery Method. This is a semi-log analysis method similar to the Cooper-Jacob procedure.

In this method, residual drawdown is plotted on a semi-log graph versus the ratio t/t', where t is the time since pumping began and t' is the time since pumping stopped. A straight line of best fit is constructed through the data points and T is calculated from the slope of the line as follows:

$$T = \frac{264Q}{\Delta s} \qquad (7)$$

The recovery data are particularly useful compared to time-drawdown data. Because the pump is not running, spurious data responses associated with dynamic discharge rate fluctuations are eliminated. The result is that the data set is generally "smoother" and easier to analyze.

Recovery data also were analyzed using the Cooper-Jacob and Hantush methods described above. In applying these procedures, simple recovery (difference between residual drawdown and maximum drawdown observed at the end of the pumping period) was plotted versus recovery time (t'). Such a plot can be considered analogous to a time-drawdown plot and is accurate for early and middle data. For late data, however, this approach can sometimes lose accuracy. The reason for possible loss of accuracy is explained as follows.

Theoretically, recovery time must be plotted against *calculated recovery*, which is defined as the difference between the observed residual drawdown and the drawdown that would have occurred had pumping continued (also called extrapolated drawdown):

$$s_c = s_e - s_r \qquad (9)$$

where,

s_c = calculated recovery
s_e = extrapolated drawdown
s_r = observed residual drawdown

Substituting simple recovery for calculated recovery is done by substituting the drawdown observed at the end of the pumping period for s_e in the above equation. At early-to-middle recovery times, this substitution introduces little error; but at late times, the discrepancy could

become substantial if the extrapolated drawdown deviates significantly from the drawdown observed at the end of the pumping period. Note that in wells where the pumping water level stabilizes during the test, the extrapolated drawdown and the drawdown observed at the end of the pumping test are identical, and no error is introduced by substituting simple recovery for calculated recovery.

Although plotting calculated recovery is theoretically correct, determining the values of extrapolated drawdown to use in computing calculated recovery is problematic. Often, the time-drawdown data are erratic, or biased by changing well efficiency, and can't be extrapolated readily. Even when the time-drawdown data are not erratic, extrapolating the drawdown trend presupposes that future drawdown changes will be similar to those observed during the pumping period. Alternatively, extrapolated drawdown can be determined by mathematical formula, but this approach presupposes particular aquifer coefficients and conceptual model of the well/aquifer system. Thus, regardless of the method used to extrapolate drawdown beyond the pumping period, the validity of the extrapolated values is in doubt. Furthermore, when calculated recovery is used in the graphical procedure, the resulting analysis does not provide independent information on aquifer parameters, but simply reflects the mathematical content of the extrapolation process.

To summarize, either simple recovery or calculated recovery may be plotted against recovery time and analyzed using time-drawdown methods. However, for late times both methods can produce errors. At late time, simple recovery may provide a poor approximation of the calculated recovery. Similarly, obtaining calculated recovery, by extrapolating the time-drawdown trend beyond the pumping period, can introduce a mathematical bias in the data.

SPECIFIC CAPACITY METHOD

The specific capacity of the pumped well can be used to obtain a lower-bound value of hydraulic conductivity. The hydraulic conductivity is computed using formulas that are based on the assumption that the pumped well is 100 percent efficient. The resulting hydraulic conductivity is the value required to sustain the observed specific capacity. If the actual well is less than 100 percent efficient, it follows that the actual hydraulic conductivity would have to be greater than calculated to compensate for well inefficiency. Thus, because the efficiency is unknown, the computed hydraulic conductivity value represents a lower bound. The actual conductivity is known to be greater than or equal to the computed value.

For fully penetrating wells, the Cooper-Jacob equation can be iterated to solve for the lower-bound hydraulic conductivity. However, the Cooper-Jacob equation (assuming full penetration) ignores the contribution to well yield from permeable sediments above and below the screened interval. To account for this contribution, it is necessary to use a computation algorithm that includes the effects of partial penetration. One such approach was introduced by Brons & Marting (1961) and augmented by Bradbury & Rothchild (1985).

Brons and Marting introduced a dimensionless drawdown correction factor, s_P, approximated by Bradbury and Rothschild as follows:

$$s_p = \frac{1-\frac{L}{b}}{\frac{L}{b}}\left[\ln\frac{b}{r_w} - 2.948 + 7.363\frac{L}{b} - 11.447\left(\frac{L}{b}\right)^2 + 4.675\left(\frac{L}{b}\right)^3\right] \quad (10)$$

In this equation, L is the well screen length, in feet. Incorporating the dimensionless drawdown parameter, the conductivity is obtained by iterating the following formula:

$$K = \frac{264Q}{sb}\left(\log\frac{0.3Tt}{r_w^2 S} + \frac{2s_p}{\ln 10}\right) \quad (11)$$

To apply this formula, a storage coefficient value must be assigned. Storage coefficient values for unconfined sand and gravel aquifers, such as the Puye Formation in which many of the R-wells are completed, typically range from a few percent to 20 percent or more, with the majority of the values falling between approximately 5 and 15 percent. Thus, in the absence of site-specific storage coefficient data for the Puye, a value of 0.1 is deemed to be a reasonable choice for performing calculations for unconfined conditions. When confined conditions are encountered, as in R-26 Screen 2, for example, the storage coefficient can be expected to range from about 10^{-5} to 10^{-3}, depending on aquifer thickness (the thicker the aquifer, the greater the storage coefficient). Typically, a value of 5 x 10^{-4} may be assigned for calculation purposes. The choice of storage coefficient is less clear for other formations on the plateau, such as the more massive Cerro Toledo interval in which Screen 1 is completed. Conditions in the Screen 1 zone are likely to be unconfined, but the porosity and specific yield of the Cerro Toledo may be expected to be less than that of the Puye. Without site-specific information on the specific yield of the Cerro Toledo, an arbitrary estimated value of 1 percent was use in the calculations. The calculation result is not particularly sensitive to the choice of storage coefficient value, so a rough estimate of the storage coefficient is adequate to support the calculations.

The analysis also requires assigning a value for the saturated aquifer thickness, b, which is generally not known. Fortunately, the calculated value of hydraulic conductivity is usually insensitive to the selected aquifer thickness value, as long as the aquifer thickness is significantly greater than the screen length. This is because saturated aquifer materials far above or below the screened interval contribute little to the yield of the well. Thus, it was expected that an approximate aquifer thickness estimate would suffice for the calculations.

An alternative specific capacity method for partially penetrating screens is a formula presented by Hvorslev (1951) that can be derived directly from Darcy's Law:

$$K = \frac{229}{L}\frac{Q}{s}\ln\left(\frac{L}{2r_w} + \sqrt{1+\frac{L^2}{4r_w^2}}\right) \quad (12)$$

where,

K = hydraulic conductivity, in gpd/ft^2
Q = discharge rate, in gpm

L = well screen length, in feet
s = drawdown, in feet
r_w = borehole radius, in feet

This formula is derived based on the assumption of infinite aquifer thickness, above and below the well screen, and infinite pumping time. As such, it works reasonably well for short well screens completed in thick aquifers and very long pumping times. As with other specific capacity methods, the resulting K value may be considered a lower-bound estimate of the screened zone hydraulic conductivity.

Computing the lower-bound estimate of hydraulic conductivity can provide a useful frame of reference for evaluating the other pumping test calculations.

SCREEN 1 (651.8 to 669.9 ft bgs)

This section presents the data obtained from the R-26 Screen 1 aquifer tests and the results of the analytical analyses. All tests were run with both well Screens 1 and 2 open, i.e., Screen 1 was not hydraulically isolated from Screen 2. However, as was verified subsequently, Screen 2 produces negligible flow and, thus, the test results may be considered applicable to Screen 1.

There were several episodes of testing that were analyzed:

1. Trial 1. R-26 was pumped at 16 gpm for 72 minutes from 3:52 pm to 5:04 pm on February 16, followed by 28 minutes of recovery.
2. Trial 2. R-26 was pumped at 16 gpm for 31 minutes from 5:32 pm to 6:03 pm on February 16, followed by a day and a half of recovery.
3. Pumping Test. R-26 was pumped at 15.7 gpm (declining to 14.8 gpm) for 565 minutes from 8:36 am to 6:01 pm n February 18.
4. Pumping Test Restart. Following a 61-minute shutdown, R-26 was pumped at 7 gpm (declining to 6.8 gpm) for 828 minutes from 7:02 pm on February 18 to 8:50 am on February 19.
5. Recovery. Recovery data were collected for 1465 minutes from 8:50 am on February 19 to 9:15 am on February 20.

Background Data

Figure 1 shows the "apparent" water level hydrograph and the barometric pressure data recorded on February 17 and 18. These data were recorded well after the brief Trial 1 and Trial 2 pumping events. While the barometric pressure data showed typical diurnal and sinusoidal response, the measured aquifer pressures were very different. It appears that the upper screen zone was still recovering from the short trial pumping episodes. Recovery had not yet become complete, even more than 1.5 days following the trial pumping tests. This response was different than seen in previous R-well pumping tests performed during this phase of investigation. Such sluggish recovery response suggests aquifer boundaries and an aquifer not well connected to the main regional aquifer. The response is not unlike what would be expected in a perched aquifer of limited areal extent.

There was no discernable correlation between aquifer pressures and barometric pressure, suggesting that the Screen 1 zone is nearly 100 percent barometrically efficient. Recall that the observed lack of aquifer pressure response to changes in barometric pressure implies that, had no packer been installed, the actual water levels in the well would have responded nearly equally and opposite to changes in barometric pressure, such that the combined pressure (water head plus atmospheric pressure) would have shown negligible change (except for the steady, gradual recovery from pumping). The observed barometric pressure and aquifer pressure response indicated that barometric corrections to the pumping test data were not necessary, because barometric pressure changes had little effect on the measured pressures in the well.

Trial 1

The first pumping trial consisted of 72 minutes of pumping followed by 28 minutes of recovery. Figure 2 shows the resulting recovery data plot.

The graph shows three distinct slopes. The first slope (right-hand side of graph, i.e., large values of t/t') shows the early data response reflecting the transmissivity of the screened interval. The calculated transmissivity was 240 gpd/ft for the 18.1-foot-thick interval, making the hydraulic conductivity 13.3 gpd/ft^2, or 1.8 feet per day.

During the first minute of recovery, the data trace began to flatten, consistent with vertical expansion of the cone of depression. The transmissivity calculated from the second slope on the graph was 620 gpd/ft, corresponding to some (unknown) thickness of sediments greater than the screen length. The second slope was analyzed using the Hantush method to account for the effects of partial penetration. Figures 3, 4, and 5 show the Hantush analysis results for assumed vertical anisotropy ratios of 1.0, 0.1, and 0.01, respectively. The resulting transmissivity values ranged from 690 to 1000 ft^2/day (5160 to 7480 gpd/ft), while the resulting hydraulic conductivity values ranged from 2.7 to 3.9 feet per day. The different values obtained from the analysis result from different assumed vertical anisotropy ratios (a parameter that is unknown and can't be determined from the available data). All calculations were performed for an assigned aquifer thickness of 258 feet, the observed saturated portion of the Cerro Toledo interval in R-26.

Note on Figures 3 through 5 that the early data did not fit the partial penetration type curves, but described a steeper slope. This indicates that the hydraulic conductivity of the materials immediately adjacent to the well screen is less than that of the sediments farther from the screen, either laterally or vertically. Indeed, early time analysis showed the hydraulic conductivity of the near well sediments to be 1.8 feet per day, while the Hantush analysis of subsequent data showed the average hydraulic conductivity over a broader area to be 2.7 to 3.9 feet per day.

Finally, the late data showed a steepening of the drawdown graph. This could be an indication of reduced hydraulic conductivity at distance, or the presence of negative boundaries, i.e., physical limits to the areal extent of the aquifer. Subsequent analyses, discussed below, suggested that the aquifer is limited in areal extent.

Trial 2

The second pumping trial consisted of 31 minutes of pumping followed by a day and a half of recovery (which also served as background data). Figure 6 shows the resulting recovery data plot.

The graph shows the same three distinct slopes as the first trial. The first slope shows the early data response reflecting the transmissivity of the screened materials. The calculated transmissivity was 250 gpd/ft for the 18.1-foot-thick interval, making the hydraulic conductivity 13.8 gpd/ft^2, or 1.8 feet per day.

The second slope shows the effect of partial penetration. Figures 7, 8, and 9 show Hantush analyses of these data for vertical anisotropy ratios of 1.0, 0.1, and 0.01, respectively. The resulting transmissivities ranged from 660 to 1040 ft^2/day (4940 to 7780 gpd/ft), while the hydraulic conductivity values ranged from 2.6 to 4.0 feet per day, consistent with the results of the first trial test.

Similar to the first test, the late data showed a steep slope, reflecting boundary conditions. Note on Figure 6 that even after more than a day and a half of recovery, the water level was still more than 1.6 feet below the original static water level – this after only about an hour and a half of total preliminary pumping. This suggests that the aquifer is limited in areal extent and not well connected to the regional aquifer. A possible explanation for the observed response is perched conditions. In other words, a perched aquifer having limited areal extent would be expected to respond as observed here. Well R-26 is located in a recharge area where the downward gradients are exceedingly steep (over 30 percent). In this hydrologic setting, perching conditions would not be unexpected. Keep in mind that the pumping response does not prove or guarantee perched conditions, but is nevertheless consistent with such conditions.

Note that the steep-flat-steep data pattern in both trial 1 and trial 2 has the same form as the response associated with delayed yield in an unconfined aquifer, due to slow drainage of the sediments above the cone of depression. This idea was investigated by applying the Neuman method for partially penetrating wells in unconfined aquifers to the data set (not presented here). Using this procedure, it was not possible to arrive at a reasonable solution if parameters such as storage and vertical anisotropy ratio were constrained to plausible values. Therefore, the delayed yield hypothesis was rejected.

Pumping Test

Following the extended recovery period at the end of trial 2, the 24-hour pumping test was started. As described earlier, the test consisted of 565 minutes of pumping at 15.7 gpm (declining to 14.8 gpm), a 61-minute shutdown, and 828 minutes of pumping at 7 gpm (declining to 6.8 gpm).

Figure 10 shows a linear plot of the time-drawdown response. It can be seen on the left side of the graph that the drawdown curve appeared regular (concave upward) until the water level fell into the well screen. Once dewatering of the well screen began, the water levels showed a steepening downward trend, eventually plunging into the casing below the bottom of the screen.

In general, once the pumping water level falls below the well screen, additional lowering of the water level cannot induce more flow from the aquifer, because the aquifer has already been drawn down to the maximum. What occurs next is that, because the aquifer is being pumped at a constant head (i.e., effective head at the bottom of the screen), the flow from the aquifer declines with time as the cone of depression expands. As this occurs, the pump (operating at a fixed rate) begins emptying the casing beneath the screen to make up for the loss of production from the

aquifer. Under these circumstances, it is common for the sump beneath the screen to be completely dewatered in a short time.

In R-26, the dewatering of the casing below the well screen was slowed substantially. This is because, as the sump dewatered, the vertical lift required of the pump increased, causing the pumping rate to decline. Thus, this built-in control mechanism caused the discharge rate produced by the pump to nearly mirror the flux from the aquifer. The result was that it took nearly four hours to evacuate just 57 feet of annulus between the 5-inch OD well casing and the 2-inch drop pipe, a water volume of only 34 gallons.

Once this suspected response was deduced, the pump was shut down. Figure 10 shows the water level rebound that occurred when the pump was shut off for 61 minutes, as well as the response to restarting the pump at 7 gpm.

An attempt was made to analyze the early data from the 15.7 gpm segment of the test. Figure 11 shows the time-drawdown graph of data up to the point where the water level fell into the screen. This graph showed only the second (flat) and third (steep) slopes analogous to those observed in the trial tests on Figures 2 and 6. The early steep slope was not observed in this data set. Notice that at a pumping time of 0.1 minutes, the observed water level displacement was nearly 30 feet. By comparison, inspection of Figures 3 through 5 and 7 through 9 shows displacement magnitudes of around 10 feet (plus or minus) at 0.1 minutes. The excess drawdown on Figure 11 was likely caused by a slow leak in either a coupling joint or a check valve in the drop pipe, resulting in antecedent drainage of a portion of the drop pipe. This caused the pump to start against reduced head and, therefore, pump at a greater rate than under full head conditions. As a result of the greater initial discharge rate, the early data were affected (exaggerated drawdown) and the steep early slope was absent. The Hantush method was applied to the drawdown data to calculate hydraulic conductivity values. Previous Hantush curve matching analyses for trial tests 1 and 2 were applied to data recorded between times ranging from about 1 minute to 5 or 10 minutes. Therefore the Hantush analysis of the 24-hour pumping test data set was constrained to data recorded in this same time interval. Figures 12, 13, and 14 show the analytical results for vertical anisotropy ratios of 1.0, 0.1, and 0.01, respectively. The calculated hydraulic conductivity values ranged from 2.5 to 3.9 feet per day, consistent with the results of trials 1 and 2. Note that the curve matches on Figures 12, 13, and 14 are not particularly good. Nevertheless, the analysis presented is still valid and worthwhile. The early data were affected by the initial over pumping of the well (caused by antecedent drainage of the drop pipe) and, as such, should fall above the theoretical type curve. Similarly, the late, boundary-affected data should lie above the theoretical type curve. Only those data points between the early data and the boundary-affected data would be expected to fall on the type curve. So long as the curve matches are restricted to the appropriate data segments, they may be considered valid and should be included in the analysis. Indeed, the resulting aquifer parameter values agreed well with the results of trials 1 and 2.

Pumping Test Restart

Following the 61-minute shut down of the R-26 pumping test, the pump was restarted and the well was pumped for 828 minutes. The initial discharge rate was 7.0 gpm, but declined to 6.8 gpm during the test.

Figure 15 shows time-drawdown data from the restart test. On this graph, the drawdown values shown are *incremental drawdown* from the onset of restarting the pump, rather than total drawdown from the original static water level. The early data confirmed the transmissivity of the screened zone to be about 240 gpd/ft, corresponding to a hydraulic conductivity of the near-screen sediments of 13.3 gpd/ft^2, or 1.8 feet per day. The Hantush solution was applied to the flat portion of the drawdown curve immediately following the initial steep portion. Figures 16, 17, and 18 show curve matching results for vertical anisotropy ratios of 1.0, 0.1, and 0.01, respectively. The resulting hydraulic conductivity values ranged from 2.0 to 2.9 feet per day.

Note on Figure 15 that the third (steep) slope seen on previous data plots was absent. Instead, the late data actually showed water level reversal, rising slightly for most of the test. This was attributable to a combination of the gradual reduction in pumping grate during the test and superposition of the ongoing water level rebound (recovery), from the previous 15.7 gpm pumping event, on the new pumping test.

Recovery

Following the completion of the 24-hour pumping test, recovery was measured for 1465 minutes. Figure 18 shows the resulting recovery graph. The slope of the early recovery data showed a screen zone transmissivity of 180 gpd/ft, corresponding to a hydraulic conductivity of 9.9 gpd/ft^2, or 1.3 feet per day. As seen in previous plots, the subsequent data showed flattening of the curve associated with vertical expansion of the cone of depression, followed by steepening associated with boundary effects.

Partial penetration effects were analyzed using the Hantush method to quantify formation properties at greater distances, laterally and vertically, from the screen zone. Figures 20, 21, and 22 show curve matching results for assumed vertical anisotropy ratios of 1.0, 0.1, and 0.01, respectively. The resulting hydraulic conductivity values ranged from 2.3 to 3.6 feet per day, considered representative of a greater volume of aquifer than the near-screen portion.

Note on Figure 19 that after more than one day of recovery, the observed water level was still more than 2.6 below the original static water level. This provides additional evidence that the aquifer is limited in areal extent, not well connected to the regional aquifer, and possibly perched.

Specific Capacity Analysis

Specific capacity data from Screen 1 were used to compute lower-bound estimates of hydraulic conductivity. Two data sets were used for this.

First, at the beginning of the 24-hour pumping test, Screen 1 produced 15.7 gpm with 43.36 feet of drawdown after 100 minutes of pumping. The Brons and Marting formula was used to compute the lower-bound hydraulic conductivity value. Other inputs used in the calculation included a borehole radius of 0.51 feet, an aquifer thickness of 258 feet (the Cerro Toledo), a storage coefficient of 0.01 and a well screen length of 18.1 feet. (As explained earlier in the section entitled SPECIFIC CAPACITY METHODS, in the absence of site-specific field data the storage coefficient of 0.01 was selected because the fractured Cerro Toledo is expected to have a lower porosity than would a granular aquifer.) The resulting lower-bound hydraulic conductivity value was 2.4 feet per day. A second calculation was based on recovery following the 24-hour

pumping test. Following final pumping at 6.8 gpm, the water level recovered 19.97 feet after 100 minutes. The Brons and Marting method produced a lower-bound hydraulic conductivity estimate of 2.2 feet per day from this information.

The computed values of 2.4 and 2.2 feet per day were consistent with previous results, which showed a hydraulic conductivity of around 1.8 feet per day immediately adjacent to the well screen, and 2.0 to 4.0 feet per day away from the screen, depending on vertical anisotropy ratio.

At first glance, the lower-bound estimates appear contradictory in that they exceed the calculated hydraulic conductivity of the near-bore sediments of 1.8 feet per day. However, the degree of exceedance is small and can be considered insignificant compared to the expected accuracy of the various analyses. Furthermore, the hydraulic conductivity of the more distant sediments was estimated to range from 2.0 to 4.0 feet per day. Thus, when a weighted average hydraulic conductivity of the near-bore sediments and distant sediments is considered, the lower-bound hydraulic conductivity values are consistent with these, rather than contradictory.

SCREEN 2

This section presents the data obtained from the R-26 Screen 2 hydraulic tests. The Screen 2 testing occurred in two phases – a brief preliminary shut-in, pumping and recovery test; and a long-term isolation test.

Preliminary Test

The preliminary test involved setting a packer below Screen 1, monitoring shut-in head for 52 minutes, pumping for 15 minutes, and monitoring recovery for an additional 53 minutes.

The packer was inflated at 11:22 am on February 20. After 52 minutes, the pump was started at 12:14 pm. After 15 minutes of pumping, cavitation occurred and the pump was shut down at 12:29 pm. Monitoring continued for an additional 53 minutes, until 1:22 pm when the packer was deflated.

Figure 23 shows the heads monitored during the two-hour-long preliminary test. As shown on the graph, the shut-in head declined rapidly for about a half hour after the packer was inflated.

Prior to shut-in, the head on the deep screen zone had been maintained at or near the static water level of the Screen 1 zone for an extended period – essentially since the well was completed on October 19, 2003. This was equivalent to a long-term constant-head injection test of 126 days duration. This meant that the observed head decline following shut-in could be analyzed as a standard post-injection recovery data set. As described later, the effective injection rate was determined to be 0.099 gpm, based on data recorded during the long-term isolation test.

Note that although the effective injection rate was quite low it was nevertheless determined with a high degree of accuracy. As explained in the next section, this was accomplished by observing the rate at which water drained out of a 2-inch pipe. Thus, the rate, as determined, and the corresponding calculations of aquifer parameters can be considered roughly as reliable as those determined by more conventional means.

As shown on Figure 23, after about half an hour of shut-in, the peizometric head rose slightly and leveled off. It was surmised that the check valve above the pump had leaked, allowing a

very small quantity of water in the drop pipe to seep slowly into the Screen 2 zone. The seepage rate was sufficient to halt recovery and maintain the head.

At 12:14 pm, the pump was started and run for 15 minutes. The data points shown on Figure 23 were recorded at 3-second intervals. Note that upon starting, the peizometric head declined more than 40 feet between consecutive measurements, i.e., in less than three seconds. At that point, a full vacuum was formed beneath the packer and further head reduction required physical drainage of the annular space between the 5-inch OD well casing and the 2-inch drop pipe, resulting in a slower rate of head reduction. The water level declined to near the pump intake at which point cavitation occurred.

At 12:29 pm, the pump was shut off and recovery was measured. Based on the recovery rate and the volume of the annulus between the well casing and pump drop pipe, the refill rate was computed to be 0.28 gpm. As discussed later, the static water level for Screen 2 was determined from the long-term isolation test to be about 870 ft bgs. Thus, the 0.28-gpm refilling event occurred with minimal drawdown below the Screen 2 static level. This flow rate was not consistent with the long-term injection rate of only 0.099 gpm at high head buildup above static. It was concluded that check valve leakage, or leaky joints in the drop pipe, had allowed water to leak from the drop pipe into the Screen 2 zone.

The initial recovery data, immediately following packer inflation, were analyzed using the Cooper-Jacob and Theis methods. Figure 24 shows the Cooper-Jacob analysis of the data, revealing a very low deep zone transmissivity of 0.37 gpd/ft. For exceedingly tight sediments, the cone of depression grows very slowly, both laterally and vertically. Therefore, it was assumed that the vertical growth of the cone of depression beyond the screen zone would have been minimal during the brief recovery period. Thus, the computed transmissivity was taken to be representative of the screened interval of 23.2 feet, making the hydraulic conductivity 0.016 gpd/ft^2, or 0.002 feet per day.

It was determined that the very early recovery data were not valid for the Cooper-Jacob analysis because the *u*-value criterion was not met. Therefore, the data were analyzed using Theis curve matching. Figure 25 shows the curve matching results, which produced a transmissivity of 0.41 gpd/ft, yielding a hydraulic conductivity of 0.018 gpd/ft^2, or 0.0024 feet per day.

Long-Term Isolation Test

Based on the very low yield of the deep zone, the decision was made to hydraulically isolate it by packing off Screen 1 and monitor the head decline once the influence of the Screen 1 head was removed. A packer was set on 2-inch drop pipe at a depth of about 713 ft bgs, with a 1 7/8-inch OD stinger pipe extending below the packer to approximately 720 ft bgs. The packer was inflated at 2:20 pm on February 22 and maintained until 8:00 am on March 6, providing a data record of 12.7 days duration.

Figure 26 shows the water levels measured during the Screen 2 isolation period. The first 110 feet or so of water level decline corresponded to drainage of the inside of the 2-inch pipe connected to the packer. Once the water level dropped below 720 feet (the bottom of the stinger pipe) further water level decline corresponded to drainage of the full 5-inch OD well casing.

The hydrograph on Figure 26 shows some unusual responses. First, once the water level fell below the packer into the 5-inch well casing, the rate of descent proceeded at a nearly linear rate (on February 23). Another near-linear segment occurred on February 25. There was no apparent explanation for this unusual response.

Second, the water levels reversed direction and rose periodically – tens of feet in some instances – during the monitoring period. Such water level fluctuations, especially at great depths, are exceedingly rare.

It was not known if the measured head values were valid or whether the pressure transducer had malfunctioned. To check the transducer response, at the end of the monitoring period, the transducer was manually raised and lowered prescribed distances, so that the recorded output could be compared to the known vertical displacements. The transducer readouts correctly reflected these artificially imposed head changes.

If the transducer readings on Figure 26 are valid, it is difficult to explain the large water level fluctuations during the last week of monitoring. Perhaps the proximity of R-26 to the mountain front is such that snowmelt events are able to induce rapid head changes, even at depth. Once Westbay equipment is installed in R-26, it will be important to monitor Screen 2 long term to see if similar responses are observed.

The average depth to water over the last week of monitoring was 870 ft bgs. This was taken to be a representative estimate of the static water level for the deep zone. This water level is 263 feet lower than the initial static water level observed in Screen 1.

The Figure 26 water level recession graph was expanded on Figures 27 and 28 to provide greater detail. As shown on these figures, the segment reflecting drainage of the 2-inch pipe showed the expected concave upward appearance, indicating a gradual reduction in the rate of water level decline as the head dropped.

Note that once the head reached the bottom of the stinger pipe beneath the packer, the water level stabilized for a while. This is because water in the annulus, outside the stinger pipe and beneath the packer element, which was being held above the water level by vacuum, gradually drained out as the vacuum was released because of exposure to atmospheric pressure when the water level reached the lower end of the stinger pipe. The duration of the horizontal portion of the hydrograph illustrates the length of time it took for the suspended volume of water to drain – approximately 107 minutes.

Figures 27 and 28 showed expected response for the water level descent through the 2-inch pipe and packer. Through the 2-inch pipe, the expected concave upward form was evident in the data curve. Even the subtle change in the shape of the curve associated with the water level falling through the smaller inside diameter packer assembly can be seen on the graph. This portion of the hydrograph looked normal, orderly, and consistent with expectations.

The data on Figure 28 were used to determine the rate at which water flowed into Screen 2, calculated as the volume of water that drained from the 2-inch pipe divided by the time it took to drain. Figure 29 shows the calculated injection rates. As expected, as the head dropped, the seepage rate of water into Screen 2 declined. The initial injection rate, calculated using the earliest measurements, was 0.099 gpm. This was the injection rate associated with a head

buildup in Screen 2 equal to the static water level in Screen 1. It was concluded that approximately 0.099 gpm had flowed from Screen 1 to Screen 2 since well completion. (Note that the actual flux rate would have been somewhat less than 0.099 gpm during the time that the solid neoprene packer was in place between Screens 1 and 2, because of the slight flow resistance imposed by the packer.)

As shown on Figure 29, the injection rate declined to a value of about 0.038 gpm by the time the water level reached the packer. When the water level reached the bottom of the stinger pipe, it stabilized as the suspended water between the stinger pipe and well casing drained away. The volume of water suspended in the annulus around the stinger pipe was calculated to be 4.11 gallons. The hydrograph data showed that it took 107 minutes for this volume to drain away, before water levels resumed their downward trend. This worked out to a drainage rate of 4.11/107 = 0.038 gpm, a good match to the observed drainage rate at the time that the water level first reached the packer.

Thus, as discussed above, the portion of the hydrograph reflecting the water level descent through the 2-inch pipe, packer and stinger pipe showed 1) the expected concave upward response indicating declining flux rate with declining head, 2) the effect of the smaller inside diameter of the packer assembly, and 3) reasonable seepage rates showing both the expected decline over time and a good match between the seepage rate at the bottom of the 2-inch pipe and the draining of the annulus outside the stinger pipe. Despite this consistent set of observations, however, once the water levels fell into the 5-inch casing, contradictory response was observed.

Figure 30 shows the water level decline inside the 5-inch casing on February 23. (A straight line has been added to the graph to demonstrate how nearly linear the measured response was.) Based on the volume of the 5-inch casing and the measured water level descent rate, the drainage rate was calculated to be 0.046 gpm. There was no explanation as to why the apparent injection rate declined to 0.038 gpm inside the 2-inch pipe and then increased to 0.046 gpm. Further, there was no explanation as to why the apparent seepage rate of 0.046 gpm was maintained nearly constant as the head declined an additional 100 feet. It is not known whether the transducer malfunctioned or whether the data are valid. However, as stated previously, attempts to assess the working order of the transducer showed it to be responding accurately.

Specific Capacity Analysis

Information gained on the injection rate of Screen 1 water into Screen 2 was used to compute lower-bound hydraulic conductivity estimates for the Screen 2 zone. With the applied head on Screen 2 equal to the static water level in Screen 1 (approximately 607 ft bgs), the flux rate had been calculated to be 0.099 gpm. This rate (or similar) had been occurring since well completion 126 days earlier. The corresponding head buildup was 870 – 607 = 263 feet. The Brons and Marting formula was used to calculate a lower-bound hydraulic conductivity from this information. An arbitrary assumed aquifer thickness of 400 feet and an estimated storage coefficient of 0.0005 were used in the calculation. The resulting lower-bound hydraulic conductivity was 0.0021 feet per day. The calculation was repeated using the Hvorslev formula, yielding 0.0019 feet per day. These values were consistent with the values of 0.0020 and 0.0024 feet per day obtained from the time-recovery analysis.

SUMMARY

The following information was determined from the pumping, recovery, and shut-in tests on R-26.

Screen 1

1. The barometric efficiency of the Screen 1 zone was near 100 percent.
2. Implementation of the inflatable packer successfully eliminated the effects of casing storage and barometric pressure fluctuations.
3. Multiple analyses produced an average hydraulic conductivity value for the portion of the Cerro Toledo immediately adjacent to the screen of about 1.7 feet per day.
4. For portions of the aquifer farther away from the screen, multiple analyses produced average hydraulic conductivities of 2.4 feet per day for isotropic conditions, 3.1 feet per day for 10:1 anisotropy, and 3.7 feet per day for 100:1 anisotropy. The steep vertical gradient at the site suggests that values in the upper end of this range may be most reliable.
5. Analysis of specific capacity data revealed lower-bound estimates of hydraulic conductivity averaging 2.3 feet per day.
6. The data showed the tested zone to be limited in areal extent.
7. The Screen 1 interval appeared to be not well connected to the regional aquifer.
8. Evidence suggested possible perched conditions for the Screen 1 interval.

Screen 2

1. Screen 2 was shut in after 126 days of "injection", i.e., receiving water from Screen 1, at around 0.1 gpm. The recovery response produced an average hydraulic conductivity of 0.0022 feet per day.
2. A 12.7-day isolation and water level equilibration period revealed an average static water level for Screen 2 of 870 ft bgs, 263 feet deeper than the Screen 1 static water level of 607 feet.
3. After water level equilibration, the measured water levels still fluctuated over a range of nearly 25 feet. It is not known whether these fluctuations were real or symptoms of equipment malfunction. However, checks on the equipment showed it to be working properly.
4. Long-term water level monitoring of Screen 2 will be important to see if these kinds of water level fluctuations are replicated in the future.
5. In addition to the unusual water fluctuations, other inexplicable water level response was observed. The descent of the water level through the 2-inch drop pipe and packer appeared normal, conforming to expected hydraulic response in which the rate of descent declines with decreasing head. However, once the water level dropped below the packer, into the 5-inch casing, the rate of descent appeared abnormally great (corresponding to an increase in water seepage rate from 0.038 gpm to 0.046 gpm) and, further, the rate did not fall off as the head declined. There was no apparent explanation for this very unusual observed response. It is not known whether these water level responses were real or

symptoms of equipment malfunction. However, checks on the equipment showed it to be working properly.

6. Analysis of specific capacity data revealed lower-bound estimates of hydraulic conductivity averaging 0.002 feet per day.

REFERENCES

Bradbury, Kenneth R. and Rothschild, Edward R., 1985. A Computerized Technique For Estimating the Hydraulic Conductivity of Aquifers From Specific Capacity Data. Ground Water. V. 23, no. 2, pp. 240-246.

Brons, F. and Marting, V. E., 1961. The Effect of Restricted Fluid Entry on Well Productivity. J. Petrol. Technol. V. 13, no. 2, pp. 172-174.

Cooper, H. H., Jr. and Jacob, C. E., 1946. A Generalized Graphic Method for Evaluating Formation Constants and Summarizing Well Field History, Transactions. Am. Geophys. Union, v. 27, No. 4, pp. 526-534.

Hantush, M. S., 1961a. Drawdown Around a Partially Penetrating Well, Journal of the Hyd. Div., Proceedings of the American Society of Civil Engineers, vol. 87, no. HY5, pp. 83-98.

Hantush, M. S., 1961b. Aquifer Tests on Partially Penetrating Wells, Journal of the Hyd. Div., Proceedings of the American Society of Civil Engineers, vol. 87, no. HY5, pp. 171-194.

Hvorslev, J. M., 1951. Time Lag and Soil Permeability in Ground-Water Observations, Bulletin 36, U. S. Corps of Engineers, Waterways Experiment Station, Vicksburg, Mississippi.

Schafer, David C., 1978. Casing Storage Can Affect Pumping Test Data, Johnson Drillers' Journal, Jan/Feb, Johnson Division, UOP Inc., St. Paul, Minnesota.

Theis, C. V., 1935. The Relation Between the Lowering of the Piezometric Surface and the Rate and Duration of Discharge of a Well Using Groundwater Storage, Transactions. Am. Geophys. Union, v. 16, pp. 519-524.

Westbay Instruments Inc.
A Schlumberger Company

Installation Report

R-26 Monitoring Well

Los Alamos National Laboratory

Los Alamos, NM

Prepared for:

Kleinfelder Inc.
Albuquerque, NM

Prepared by:

Westbay Instruments Inc.
WB777
August 6, 2004

CONTENTS

Westbay Instruments Inc
A Schlumberger Company

1. Introduction 1
2. Personnel 1
3. Installation 1
   - 3.1 Previous Activities 1
   - 3.2 Preparation of Monitoring Well Design 1
   - 3.3 Layout of MP Casing Components 2
   - 3.4 Lowering of MP Components 3
   - 3.5 Hydraulic Integrity Testing 3
   - 3.6 Positioning of MP Components 3
   - 3.7 Inflation of MP System Packers 3
   - 3.8 De-Stressing of MP Casing 4
4. Fluid Pressure Measurements 5

TABLES

Table 1, Summary of Packer Inflation Information, LANL Well R-26
Table 2, Depths of Key Items, R-26 MP55 Completion

APPENDIX

Construction, Stratigraphic, and Hydrogeologic Information for Characterization Well R-26, Revision 1, Figure 1, December 2003.
Schematic Diagram of Characterization Well R-26, Revision 1, Figure 2, December 2003
Summary of MP55 System Installation Procedure
MP Casing Installation Log (field copy with MP Drift Diagram, July 12, 2004
MP55 Packer Inflation Field Records (field records and packer inflation graphs for 8 packers)
Figure 1, Pre-Inflation Profile, July 16, 2004
Piezometric Pressures/Levels, July 16, 2004
Figure 2, Piezometric Profile, July 18, 2004
Piezometric pressures/Levels, July 18, 2004
Summary MP Casing Log
Figure 3, MP2A Pulse Test – Calculated Head Difference vs Elapsed Time

1. INTRODUCTION

This report and the attached Appendix document the technical services carried out by Westbay Instruments Inc. under Kleinfelder Inc. Contract Number 04-00291-033-1005 dated July 8, 2004. The Westbay MP System for groundwater monitoring was installed in the R-26 monitoring well at the LANL site near Los Alamos, NM. The MP55 System casing components were installed in a steel cased drillhole previously prepared by Water Development Corp. for Kleinfelder.

2. PERSONNEL

Field supervision of the work at the R-26 site was provided by personnel from Kleinfelder. Westbay representative Mr. David Larssen was on site from July 11 to 19, 2004 to install the well. Mr. Mark Lessard of Westbay was also on site at no charge to the project as a Westbay trainee.

3. INSTALLATION

Westbay prepared a revised "Summary of MP55 System Installation Procedure, LANL Site" dated January 12, 2003 applicable for installation of well R-26 and a copy is included in the Appendix.

3.1 Previous Activities

The R-26 borehole was drilled by Water Development Corp. under contract to Kleinfelder to a depth of 1490.5-ft using rotary drilling methods. Stainless Steel well casing (nominal 4.5-inch ID and 5.5-inch OD) with two Stainless Steel wire-wrapped well screens was backfilled in place to1479-ft depth. A 10-inch mild steel surface casing was in the top part of the borehole. As-built details of the steel well casing components and the layers of backfill are shown on a sketch from Kleinfelder titled Schematic Diagram of Characterization Well R-26, Revision 1, Figure 2, December 2003. A copy of this diagram is in the Appendix.

The reference point for all depth measurements is ground level at the well, taken as the brass survey benchmark in the concrete pad surrounding the well. The top of the 5.5-inch OD Stainless Steel well casing was 1.70-ft above ground level and the open-hole water level was reported to be 604 ft below ground level.

A sequence of well development pumping was done by Water Development Corp. under contract to Kleinfelder in the days before the Westbay installation was started.

3.2 Preparation of Monitoring Well Design

An MP Casing Installation Log, which specifies the location of each component in the borehole, was prepared in advance by Westbay based on the above R-26 Well As-Built diagram. A post-completion video log taken inside the steel well casing by Los Alamos

National Lab personnel on April 22, 2004 was also reviewed. The steel well arrangement included a nominal 20-ft length of blank stainless steel casing above and below each screen section. A pair of MP packers was positioned immediately above and a single packer was positioned immediately below each screened interval in these continuous 20-ft lengths of casing.

The MP Casing Installation Log was reviewed and revised in a meeting with personnel from Los Alamos National Lab, Kleinfelder and USDOE. The final version of the MP Casing Installation Log, dated July 12, 2004 was approved by Mr. Tom Whitacre of USDOE prior to installation of the well. The MP Casing Installation Log as approved was used as the installation guide in the field. A copy of the MP Casing Installation Log is included in the Appendix.

All depths in the well are with respect to ground level. An MP measurement port coupling and associated magnetic location collar were included in each primary monitoring zone to provide the capability to measure fluid pressures and collect fluid samples. A pumping port coupling was also included in the screened zones to provide purging, sampling and hydraulic conductivity testing capabilities. Additional measurement port couplings were included below the pumping ports in the screened zones for monitoring hydraulic tests.

Measurement port couplings were included in QA zones to provide QA testing capabilities. All 'QA' measurement ports were positioned below each of the MP55 packers to permit operation of the squeeze relief venting with the MP55 packer inflation equipment during the inflation process.

3.3 Layout of MP Casing Components

The MP casing components were set out in sequence according to the MP Casing Installation Log on racks near the borehole. Each casing length was numbered in order beginning with the lowermost as an aid in confirming the proper sequence of components. The sequential MP casing component numbers are given on the MP Casing Installation Log and are used in the following text to identify selected MP casing components (packers and ports).

The appropriate MP System coupling was attached to each piece of MP casing. Magnetic location collars were attached 2.5 ft below selected measurement ports in each of the primary monitoring zones, below selected QA zone measurement ports and below MP Coupling No. 157 near the top of the well.

The length of each MP casing section was measured with a steel tape to confirm nominal lengths, and the data were entered on the field copy of the MP Casing Installation Log.

Each casing component was visually inspected, and serial numbers for each packer, measurement port coupling and pumping port coupling were recorded on the field copy of the MP Casing Installation Log.

3.4 Lowering of MP Components

On July 12, 2004 a video log was run in the well immmediately following completion of well development work. The video log was reviewed and approved, and instruction to proceed with the well installation were given on site by Mr. Tom Whitacre of USDOE.

The MP casing components were lowered into the well in sequence with a Smeal work-over rig provided by Kleinfelder. The MP Joint Test Tool was run inside the full length of each MP casing section to confirm it was clear. Each casing joint was tested with a minimum internal pressure of 300 psi for one minute to confirm hydraulic seals. Commercially available distilled water provided by Kleinfelder was used for the joint tests. A record of each successful joint test and the placement of each casing component is on the field copy of the MP Casing Installation Log.

The suspended weight of the MP casing components was monitored and from time to time noted on the log during lowering to confirm that operating limits of the MP System casing components were not exceeded. Lowering of the MP casing to the target position was successfully completed on July 16, 2004.

3.5 Hydraulic Integrity Testing

After the casing was lowered into the borehole, the water level inside the MP casing was left at a calculated depth of 1237-ft below ground level to confirm hydraulic integrity of the casing. The calculated open-hole water level was about 612-ft below ground level. With this differential pressure acting on the MP casing string, the water level inside the MP casing was left over-night and the following morning it was stable for a measurement period of 30 minutes (actual measurement time was 60 minutes). The data from the hydraulic integrity test are shown on page No. 3 of the MP Casing Installation Log. The test indicated that the MP casing was water tight.

3.6 Positioning of MP Components

After the components were lowered into the well and the hydraulic integrity of the MP casing had been confirmed, the MP casing string was positioned as shown on the MP Casing Installation Log. The datum for the borehole was ground level. The MP casing string was supported with the top of MP Coupling No. 157 positioned 0.16-ft above ground level.

3.7 Inflation of MP System Packers

The MP packers were inflated on July 16 and 17, 2004 using commercially available distilled water provided by Kleinfelder. The packers were inflated in sequence beginning with the lowermost. All of the packers were inflated successfully and QA tests showed that all of the packer valves were closed and sealed.

A summary of the packer inflation information is shown on Table 1 below. The data for inflation of each packer are provided on the MP55 Packer Inflation Field Records and Packer Inflation Graphs included in the Appendix.

Table 1, Summary of Packer Inflation Information, LANL Well R-26

Zone No.	Packer Serial No.	Packer No.	Date Inflated (2004)	Calculated Element Pressure (psi)	Inflation Volume (litres)	QA Test Passed
	0612-441	MP127	July 17	227	3.0	Yes
QA-1						
	0612-420	MP92	July 17	280	3.2	Yes
SQA1						
	0612-416	MP90	July 17	290	2.6	Yes
Zone 1						
	0612-381	MP85	July 17	290	3.7	Yes
LQA1A						
	0612-399	MP47	July 17	288	3.4	Yes
LQA1B						
	0612-422	MP10	July 17	321	3.2	Yes
SQA2						
	0612-433	MP8	July 17	249	3.0	Yes
Zone 2						
	0612-174	MP3	July 16	283	3.0	Yes
LQA2						

3.8 De-Stressing of MP System Casing

After lowering and final positioning of the MP casing was carried out, the tensile load at the top of the MP casing was 800-lb. Westbay's standard procedure for de-stressing the MP casing was carried out during the packer inflation process. The MP casing was lowered before inflation of Packers No. MP47, MP92 and MP127 to distrubute some of the weight of the MP casing to the packers. The final load at the top of the MP casing was 300 lb. During the de-stressing, the top of coupling No. 157 was lowered from the starting point of 0.16-ft above ground to a final measured position of 0.35-ft below ground.

After all of the packers were inflated the top of MP Casing No. 158 was clamped in place at the top of the 5.5 inch well casing, and a stainless steel MP55 top coupling was installed. The MP casing was cut and trimmed to length. A sketch of the as-built top of the MP casing and final positions of the MP well components are shown on the Summary MP Casing Log in the Appendix and a summary of depth information for key MP well components is shown on Table 2 at the end of this report.

4. FLUID PRESSURE MEASUREMENTS

On July 16, 2004 a set of fluid pressure measurements was taken at each measurement port as a QA check on port performance before the packers were inflated. The MP casing was not at the final installed position at the time of these readings. All of the measurements were normal, indicating normal port performance. A plot of the piezometric levels in all zones, including QA zones, based on the July 16 pre-inflation pressure measurements is shown on Figure No.1 in the Appendix. Piezometric Levels/Pressures Field Data and Calculation Sheet for the pre-inflation pressure profile is also in the Appendix.

After packer inflation was completed, fluid pressures were measured at each measurement port. The fluid pressure profile measurements were taken on July 18, 2004. At that time, the in-situ formation pressures may not have recovered from the pre-installation and installation activities. Longer term monitoring may be required to establish representative fluid pressures.

Plots of the piezometric levels in all zones, including QA zones, based on the July 18 pressure measurements are shown on Figure No. 2 in the Appendix. The Piezometric Levels/Pressures Field Data and Calculation Sheet for the pressure profile is also in the Appendix. These data were examined to confirm proper operation of the measurement ports and as a check on the presence of annulus seals between adjacent monitoring zones. All of the measurement ports operated normally. Each of the packers below the open-hole water level was supporting a differential hydraulic pressure, indicating the presence of packer seals.

During the July 18th pressure measurements the fluid pressure measured in Screen 2 (Measurement Ports MP2B and MP2A) was slow to recover from the minor pressure disturbance caused by the measurement process. Therefore the actual fluid level in Screen 2 might be lower (deeper) than indicated in the pressure profile calculations.

After the slow recovery response was observed in Screen 2, a "Pulse Test' was performed. An excess head of about 75 ft of fresh water was applied to the zone through Measurement Port No. 2A for a duration of 1 minute. At the end of the flow period, the shut-in monitroing zone pressure was observed for a recovery period of about 35 minutes. The shut-in pressure appeared to have more or less stabilized after about 30 minutes. A plot of the "Pulse Test" information is shown on Figure 3 in the Appendix.

Field operators should be aware that the equilibration time required for pressure readings during pressure profiling in the Screen 2 measurement ports (MP2A and MP2B) will likely be about 30 minutes, rather than the more typical <<1 minute equilibration time as observed with Screen 1.

It was estimated that a maximum of about 70ml of water had flowed into the zone during the 1-minute 'flow period' of the test. Such a slow rate may indicate that future operators might experience longer waiting times in order to collect groundwater samples from Screen 2.

Table 2, Depths of Key Items, R26 MP55 Completion,

Zone No.	Screen Interval * (ft)	Sand Pack Interval * (ft)	MP Casing No. (from MP Log)	Packer No.	Packer Serial No. (0612)	Nominal Packer Position ** (ft)	Magnetic Collar Depth (ft)	Measurement Port Depth** (ft)	Pumping Port Depth** (ft)	Port Name	Comments
			127	1	441	295.3					
QA-1			126				302.4	299.9		QA-1	
			92	2	420	634.8					
SQA1			91				None	639.4		SQA1	
			90	3	416	644.7					
			88				661.7	659.3		MP1A	
			87						664.7	PP1	
Zone 1	651.8 to 669.9	618 to 672	86				None	670.3		MP1B	
			85	4	381	673.9					
LQA1A			84				None	678.6		LQA1A	
			47	5	399	1043.2					
LQA1B			46				1050.3	1047.8		LQA1B	
			10	6	422	1402.6					
SQA2			9				None	1407.0		SQA2	
			8	7	433	1412.6					
			6				1429.5	1427.0		MP2A	
			5						1432.4	PP2	
Zone 2	1421.8 to 1445.0	1408 to 1479	4				None	1438.0		MP2B	
			3	8	174	1448.3					
LQA2			2				None	1452.9		LQA2	

* Note: All depths are with respect to concrete pad (ground level). Depths of sand pack and screened intervals are from Schematic Diagram of Characterization Well R-26, Revision 1, Figure 2, December 2003

** All depths of MP System casing components are the depth to the top of the respective coupling.

Westbay Instruments Inc.
A Schlumberger Company

APPENDIX

LANL Monitoring Well R-26

Construction, Stratigraphic, and Hydrogeologic Information for Characterization Well R-26, Revision 1, Figure 1, December 2003.	1 page
Schematic Diagram of Characterization Well R-26, Revision 1, Figure 2, December 2003	1 page
Summary of MP55 System Installation Procedure	3 pages
MP Casing Installation Log (field copy with MP Drift Diagram, July 12, 2004)	18 pages
MP55 Packer Inflation Field Records (field records and packer inflation graphs for 8 packers)	21 pages
Figure 1, Pre-Inflation Profile, July 16, 2004	1 page
Piezometric Pressures/Levels, July 16, 2004 Field Data and Calculation Sheet	1 page
Figure 2, Piezometric Profile, July 18, 2004	1 page
Piezometric Pressures/Levels, July 18, 2004 Field Data and Calculation Sheet	2 pages
Summary MP Casing Log	7 pages
Figure 3, MP2A Pulse Test	1 page

Location: Mesa South of Cañon de Valle
(on down thrown side of Pajarito Fault) TA-16

Description: Brass Marker
Northing: Survey to be performed January, 2004
Easting: Survey to be performed January, 2004
Elevation: Survey to be performed January, 2004

Description: Well Casing
Northing: Survey to be performed January, 2004
Easting: Survey to be performed January, 2004
Elevation: Survey to be performed January, 2004

Description: Core Hole
Northing: Survey to be performed January, 2004
Easting: Survey to be performed January, 2004
Elevation: Survey to be performed January, 2004

Coring:
(0' - 19') Split Spoon
(19' - 25') Continuous Sampler
(25' - 55') HQ Coring
(55' - 62.5') Split Spoon
(62.5' - 250') HQ Coring

Drilling:
(0' - 77') 13-3/8" Air Rotary Casing Hammer
(77' - 140') 12-1/4" Tri-Cone
(140' - 205') 12-1/4" Downhole Hammer
(205' - 1005') 12-1/4" Tri-Cone
(1005' - 1490.5') 8.5" Tri-Cone

Reaming:
(77' - 1005') 14" Roller Reamed - unsuccessful
(1005' - 1490') 10" Reamed - partial success

Data Collection:
- Hydrologic Properties: Pending
- Cores/Cuttings submitted for geochemical and contaminant characterization: 13
- Ground Water Samples Submitted
  Perched Ground Water - 9/15/03 (241') - corehole
  Deep Ground Water - 9/21/03 (604')

Geologic Properties:
Mineralogy, petrography and chemistry: 7

Borehole Logs:
- Lithologic: 0' - 1490.5'
- Video (LANL tool): 0' - 717'
- Caliper Logging: 1374' - 1474'
- Schlumberger logs:
  Compensated Neutron Log:
  9/28/03: Open Hole: 70'-985'
  10/14/03: Cased: 500'-1005'; Open Hole: 1005'-1481'
  Triple Litho-Density:
  9/28/03: Open Hole: 70'-985'
  10/14/03: Cased: 500'-1005'; Open Hole: 1005'-1481'
  Array Induction Imager:
  9/28/03: Open Hole: 70'-979'
  10/14/03: Cased: 500'-1005'; Open Hole: 1005'-1476'
  Elemental Capture Sonde:
  9/28/03: Open Hole: 70'-981'
  10/14/03: Cased: 500'-1005'; Open Hole: 1005'-1477'
  Natural GR Spectroscopy:
  9/28/03: Open Hole: 70'-979'
  10/14/03: Cased: 500'-1005'; Open Hole: 1005'-1460'
  Combinable Magnetic Resonance:
  9/28/03: Open Hole: 100'-967'
  10/14/03: Cased: none; Open Hole: 1050'-1464'
  Fullbore Formation Micro Imager:
  9/28/03: Open Hole: 450'-985'
  10/14/03: Cased: none; Open Hole: 1005'-1483'

Corehole Logs:
- Lithologic: 0' - 250'
- Video (LANL tool): 0' - 241'
- Gamma Ray (LANL Tool): 0'-245'

Core Drilling Completed: 9/8/03-9/12/03
Rotary Drilling Completed: 9/18/03-10/14/03
Contract Geophysics: 9/28/03 and 10/14/03-10/15/03
Well Installation: 10/17/03-10/10/03
Well Developed: 11/4/03-11/17/03

- Casing:
  4.5" I.D. / 5.0" O.D. A304 Stainless Steel casing with external couplings
- Number of Screens:
  Two (2) 4.46" ID wire wrapped stainless steel with external couplings.
  Screen #1 (Upper): 5.53" OD Pipe based 0.010 slot
  Screen #2 (Lower): 5.27" OD Rod based 0.020 slot
- Screen Intervals:
  Screen #1 (Upper): 651.8' - 669.9'
  Screen #2 (Lower): 1421.8' - 1445'

Well Development performed by swabbing, bailing, and pumping.
Total Volume Purged: 36,200 gallons

Corehole Piezometer Completions
- Casing - 2" OD Sched. 40 PVC threaded
- Number of Screens - One (1) 2" OD Sched. 40 PVC 0.010 slotted
- Screen Interval -
  Upper - 150' - 180'
  Lower - 230' - 250'

Geologic contacts for R-26 were determined from core samples, cuttings, borehole video, and geophysical logs.

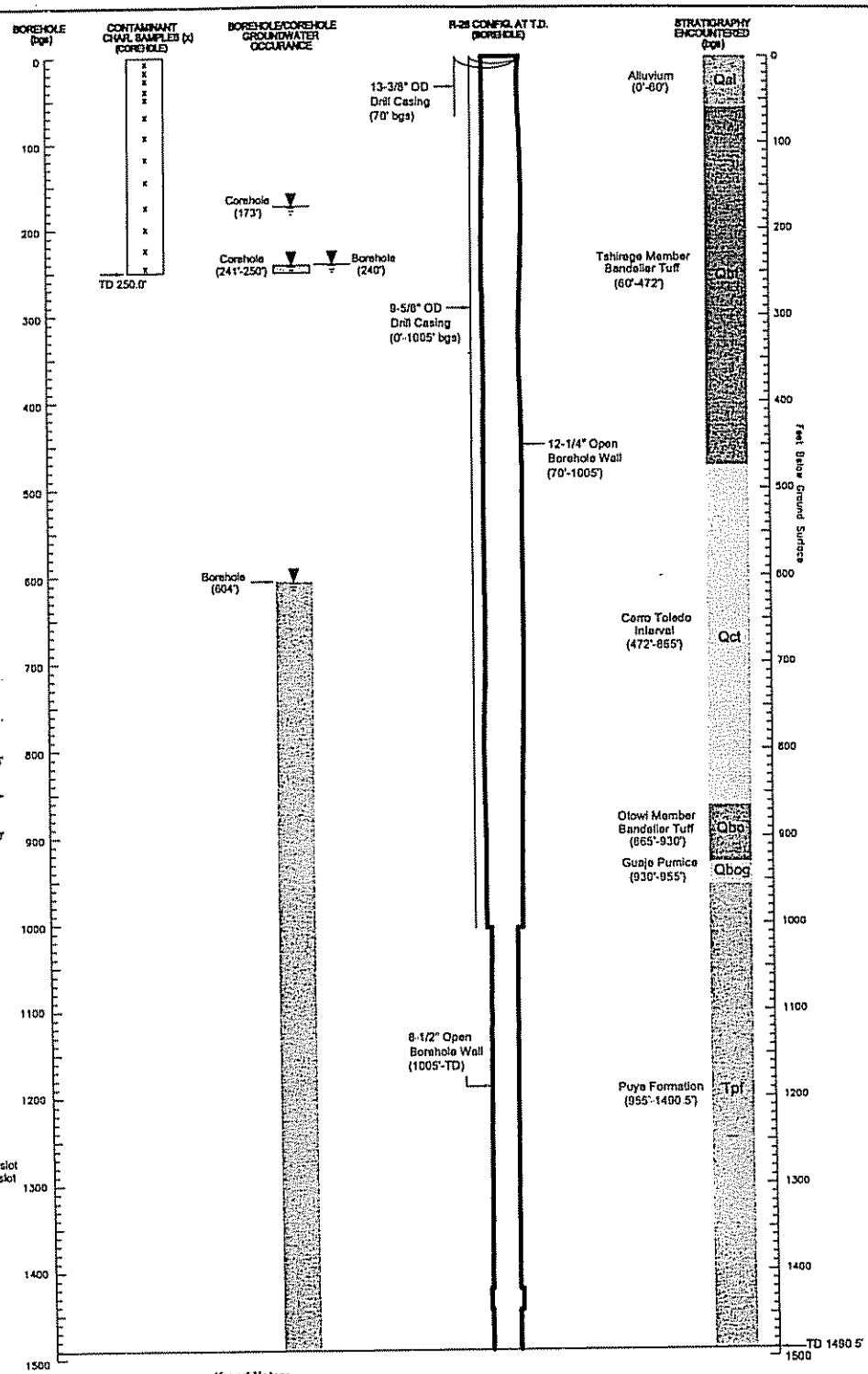

Keyed Notes:

1. Coordinates - NM State Plane Grid Central Zone (North America) Datum - 1983 (NAD83); expressed in feet.
2. Elevations - National Geodetic Vertical Datum (NGVD29); expressed in feet above mean sea level.
3. Surface completion and surveying pending.
4. All depths are below ground surface (bgs).
5. Drill casing removed prior to well installation.
6. Borehole reamed across Screen #2 interval (1421'-1445').
7. Water level measurements in shallow piezometer was 172.97', the deep piezometer was dry when sounded on 11-25-03.
8. Post development deep groundwater level measurement recorded on 9-21-03.

DCN: ALB3DR015 Rev.1

KLEINFELDER

Drawn By: C. Landon	Date: December 2003
Project No.: 37151	Filename: ALB3DR015 REV 1
Scale: Not-To-Scale	Revision: 1
Reviewed By: F. Schelby	Approved By: M. Everett

Construction, Stratigraphic, and Hydrogeologic Information for Characterization Well R-26
Los Alamos National Laboratory
Los Alamos, New Mexico

FIGURE
1

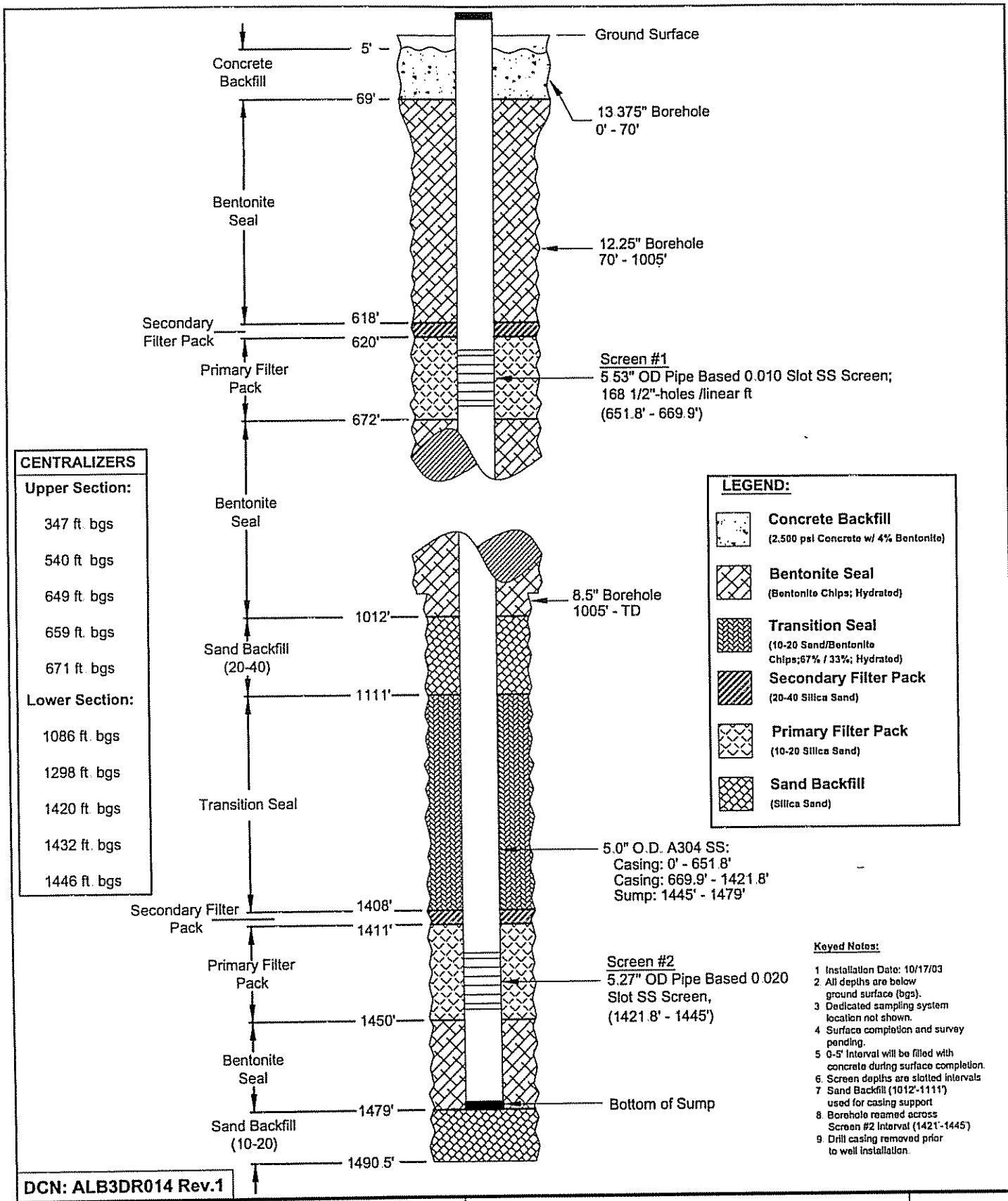

DCN: ALB3DR014 Rev.1

KLEINFELDER

Drawn By: C. Landon	Date: December 2003
Project No.: 37151	Filename: ALB3DR014 REV 1
Scale: Not-To-Scale	Revision: 1
Reviewed By: F. Schelby	Approved By: M. Everett

Schematic Diagram of Characterization Well R-26
Los Alamos National Laboratory
Los Alamos, New Mexico

FIGURE
2

Westbay Instruments Inc
A Schlumberger Company

Summary of MP55 System Installation Procedure, LANL Site

Following is a summary of the installation procedure for the plastic MP55 casing system in monitoring wells at the LANL site, Los Alamos, NM. In this outline emphasis has been placed on Q/A checks and documents generated. All Westbay equipment will be operated as set out in the appropriate operators' manuals. All documents are noted in **bold text**. It has been assumed that the installation work is carried out by customer personnel experienced with the MP System and with on-site assistance from a Westbay field representative.

A. Pre-Installation Activities

Based on the available monitoring well information on depths of well screens, blank pipes, backfill interfaces and expected head distributions, borehole water levels and fluid temperatures a proposed **MP Casing Installation Log** from Westbay's Well Designer Software (or alternatively a manually completed **MP System Casing Installation Log**) is produced, detailing the position of each component to be installed. For clarity the following discussions will only refer to the **MP Casing Installation Log**.

The proposed MP well design typically includes measurement ports placed below each packer for squeeze relief venting during later inflation of the packers. The signature of the client's responsible representative is required on the proposed **MP Casing Installation Log** to confirm acceptance of the proposed well design, the suitability of the MP casing components for the installation, and the suitability of the well for installation to proceed. The signed copy of the **MP Casing Installation Log** serves as the field installation guide for the well.

We understand that a steel multi-screen well casing (minimum ID of 4.5 inches) and a steel surface casing (typical OD of 10-inches) each with a stick-up length of about 3-ft will have already been installed. A monopod bracket (purchased from Westbay or equivalent) will have been welded to the outside of the surface casing for later attachment of the monopod unit used during packer inflation and routine monitoring.

The stable open-hole water level will be measured and recorded by the client.

B. Layout and Lowering of the MP Casing Components

The required MP casing components (casing, couplings, magnetic location collars, etc.) will be laid out and numbered in sequence according to the order indicated on the **MP Casing Installation Log**. Magnetic Location Collars are typically placed 2.5 ft (0.75 meters) below the top of the respective assembled MP casing sections.

The length of each section of MP casing will be measured and recorded on a Casing length Measurement record, or on the **MP Casing Installation Log**. Measurements will be made to the nearest 1/1000 of a foot (or to the nearest millimeter) and the temperature of the MP casing items at the time of measurement will be recorded. The MP packers should be protected from direct sunlight when laid out.

The MP55 Joint test Tool equipment will be set up and tested, and the test results recorded on the **MP Casing Installation Log**. Only water supplied by the client will be used. Each connection in the MP casing will be pressure tested prior to lowering and the results noted on the **MP Casing Installation Log**. In general a minimum test pressure of 300 psi and a minimum test duration of 1 minute should be used for all couplings and ports. The test pass criteria of no observable water leakage must be met by all couplings

before lowering. Any couplings not passing the test must be dis-connected, refurbished or replaced as necessary, and successfully re-tested and passed.

(*) SEE NOTE (DL, Jan 12, 2023)

Use of a lifting hoist and dynamometer and shock absorber apparatus is required for lowering the MP casing. The MP casing weight, differential pressure (both inside to outside, and outside to inside) and the buoyancy force on the casing bottom will be kept within operating limits. When necessary, the tensile load of the MP casing will be measured at the wellhead and noted on the **MP Casing Installation Log**.

When all of the MP casing has been placed into the well the top of the MP casing will be supported by the lifting apparatus and positioned as shown on the **MP Casing Installation Log**. A test will be carried out to confirm the hydraulic integrity of the MP casing by measuring the inside water level over a period of time and the results will be noted on the **MP Casing Installation Log**. A differential head for this test would typically be at least 30 ft (10m) of water outside over inside, though other differential pressures may be deemed suitable by the Westbay field representative. The test result is accepted (passed) if the water level inside the MP casing is stable for at least 30 minutes.

If requested by the client or if squeezing zones are expected, a pre-inflation profile will be carried out. The data will be recorder on a **Piezometric Pressures/Levels Field Data and Calculation Sheet** (manually recorded data) or recorded to disk and reported in a **MOSDAX Data Report.**

C. Packer Inflation, Casing De-Stressing and Final Trimming

The water level inside the MP casing will be adjusted (if necessary) prior to inflation of the packers. The suspended weight of the MP casing will be measured again for later use during de-stressing of the MP casing.

The inflation tool equipment will be set up and tested, and lowered into the well. The packers will be inflated, beginning with the lowermost packer in the well. Injection pressure (packer element pressure) and pumped volume will be recorded at intervals as determined by the Westbay operator (typically one reading for each 0.5 liters pumped). The data for all inflations will be recorded by computer. Selected data points will be recorded manually on a separate **MP55 Packer Inflation Field Record** for each packer. Packer inflation will be terminated as determined by the operator based on pressure and/or volume according to the type of packer being inflated and the expected well diameter. For a 4.5-inch ID well pipe and model 0612M15 packers, the expected inflation volume is 3 liters and the target inflation pressure is 250 psi over ambient.

On completion of inflation pumping the packer valve will be closed. A QA check will be carried out to confirm that the valve has been successfully closed. The final injected volume and pressure will be calculated for each packer.

The MP casing will be de-stressed at intervals as determined by the operator to decrease tensile loads to less than the long-term operating limits. After the last packer has been inflated the MP casing top will be adjusted and, if necessary, trimmed to the final configuration and clamped in position.

Use of a lifting hoist and dynamometer apparatus is required for final trimming. The final load on the MP casing after final trimming and clamping will be measured and recorded on the **M P Casing Installation Log**. A Stainless Steel top coupling (if purchased by the client) will be installed.

A **Summary MP Casing Log** will be prepared to show the final "as-built" configuration of the well, and will include a sketch of the position and dimensions of significant items at the top of the well, such as the final top of the MP casing, steel borehole casings and ground level/concrete pad, etc.

Westbay Instruments Inc
A Schlumberger Company

As soon as possible after the final trimming and landing of the MP casing, a post-inflation profile will be carried out to document the function of each measurement port and to record the initial measurements of in-situ fluid pressure. The data will be recorder on a **Piezometric Pressures/Levels Field Data and Calculation Sheet** (manually recorded data) or recorded to disk and reported in a **MOSDAX Data Report**. A graphical presentation of the results of the pressure profiles will be plotted on a **Piezometric Profile** sheet.

The Westbay field crew will later prepare a **Completion Report** which will summarize all installation activities while on site and will present all documentation, measurements and test results obtained.

JAN 12, 2003.

NOTE: THE FOLLOWING FIELD QA STEPS ARE ADDED TO THE PROCEDURE FOR LAYOUT AND LOWERING THE MP CASING.

1. Add a visual check of each MP casing to confirm the inside is clear.
2. Add a 100% pass-through of each MP casing with the MP55 Joint Test Tool to confirm the inside is clear

Dave Larsson
12 Jan 2003

Casing Installation Log

Company: Kleinfelder Consultants
Well: R26
Site: LANL
Project: Hydrogeology Study

Job No: WB777
Author: DL

Well Information

Reference Datum: Ground Level
Elevation of Datum: 0.00 ft.
MP Casing Top: 0.00 ft.
MP Casing Length: 1468.74 ft.

Borehole Depth: 1490.50 ft.
Borehole Inclination: vertical
Borehole Info: (# - start - end - diameter)
Diameter #1 - 0.00 700.00 10.00 in.
Diameter #2 - 700.00 1276.70 4.50 in.

Well Description:
PlasticMP55
Other References:
Pipe-based wire-wrapped screens
BF and screens: KC As-Built 12-2003
All depths nominal (cold meas'd lengths)

File Information

File Name: R26DRAFT.WWD
Report Date: Wed Jul 07 16:56:30 2004

File Date: Jan 28 18:31:22 2004

Comments

Log Information

Borehole condition confirmed. (method) VIDEO Date: _____
MP well design & preparation. By: DL Date: Jan 28/2004
MP well design checked. By: DL Date: Jan 28/2004
MP well and borehole approved to install. By: Tom Wilcox Date: 7/12/04

Note: revised with addition of 1 packer at bottom zone. July 12, 2004.

Casing Installation Log
Kleinfelder Consultants

Job No: WB777
Well: R26

Legend

(Qty) MP Components

(Library - WD Library 7/27/00)

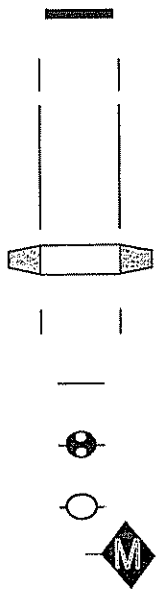

(2) 0603 - MP55 End Plug

(8) 0601M15 - MP55 Casing, 1.5 m, PVC

(142) 0601M30 - MP55 Casing, 3.0 m, PVC

(7) 0612 - MP55 Packer, Stiffened, SS

(1) 0601M10 - MP55 Casing, 1.0 m, PVC

(149) 0602 - MP55 Regular Coupling

(9) 0605 - MP55 Measurement Port

(2) 0607 - MP55 Hydraulic Pumping Port

(5) 0608 - MP55 Magnetic Location Collar

Geology

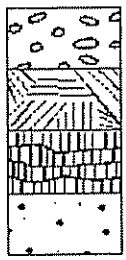

Conglomerate

Rock

Lava, Basaltic

Sandstone, Coarse

Backfill/Casing

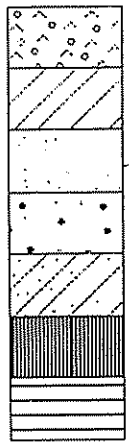

Concrete

Bentonite

Sand Fine

Sand Coarse

Bentonite, Sand

Stainless Steel

Well Screen

Quantities revised after discussion with Tom Whitacre 12 July 2004 14:30hr.

Casing Installation Log
Kleinfelder Consultants

Job No: WB777
Well: R26

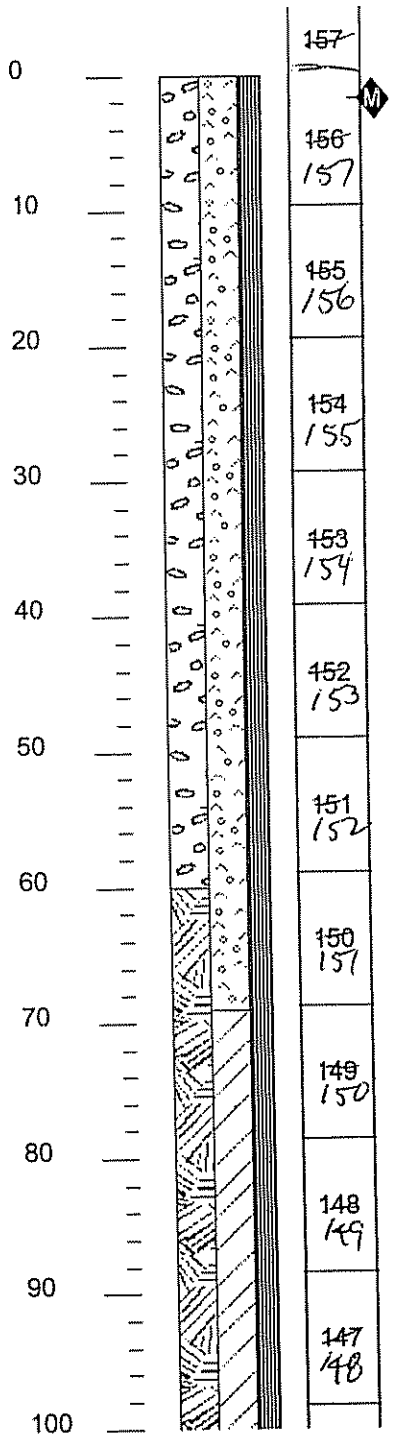

QA Tested OK	MP Casing Description
	720pm finish lowering
	0601M30 - MP55 Casing, 3.0 m, PVC 9' 10 3/16"
	0601M30 - MP55 Casing, 3.0 m, PVC 9' 10 3/16"
	0601M30 - MP55 Casing, 3.0 m, PVC 9' 10 3/16"
	0601M30 - MP55 Casing, 3.0 m, PVC 9' 10 3/16"
	0601M30 - MP55 Casing, 3.0 m, PVC 9' 10 3/16"
	0601M30 - MP55 Casing, 3.0 m, PVC 9' 10 3/16"
	0601M30 - MP55 Casing, 3.0 m, PVC 9' 10 3/16"
	0601M30 - MP55 Casing, 3.0 m, PVC 9' 10 3/16"
	0601M30 - MP55 Casing, 3.0 m, PVC 9' 10 3/16"
	0601M30 - MP55 Casing, 3.0 m, PVC 9' 10 3/16"

(c) Westbay Instruments Inc. 2000ed Jul 07 17:13:56 2004

HYDRAULIC INTEGRITY TEST.
EM2609-250 AT SOA-1

TIME	Pressure
0906	85.03 psia
0920	85.03 psia
0940	85.03 psia
1000	85.02 psia

therefore MP casing is water tight.

9.840'
9.84896 - .015625

Casing Installation Log
Kleinfelder Consultants

Job No: WB777
Well: R26

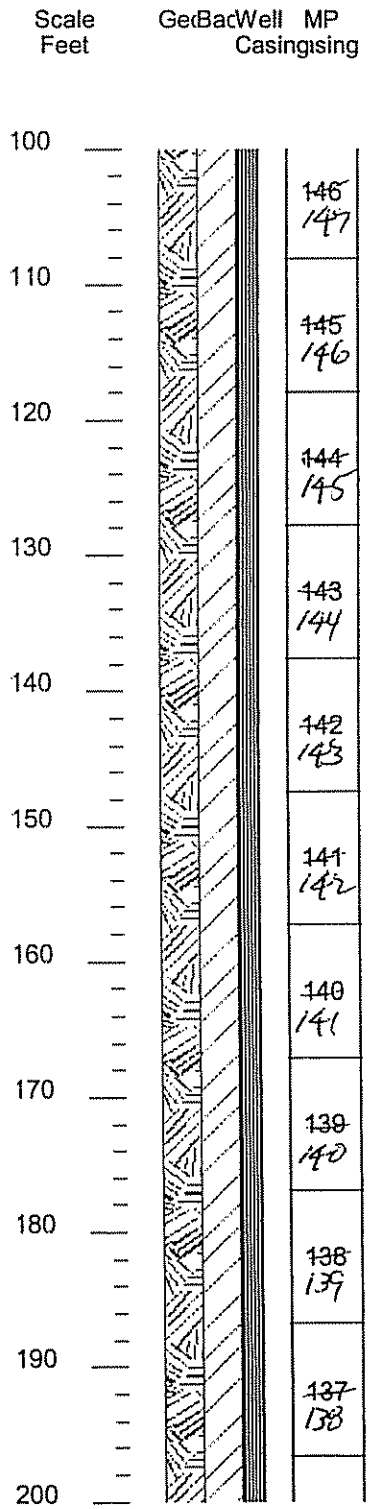

QA Tested OK	MP Casing Description	
☑	0601M30 - MP55 Casing, 3.0 m, PVC	9'10 1/8"
☑ 30		
☑	0601M30 - MP55 Casing, 3.0 m, PVC	9'10 3/16"
☑ 55		
☑	0601M30 - MP55 Casing, 3.0 m, PVC	9'10 1/8"
☑ 70		
☑	0601M30 - MP55 Casing, 3.0 m, PVC	9'10 3/16"
☑ 35		
☑	0601M30 - MP55 Casing, 3.0 m, PVC	9'10 3/16"
☑ 13		
☑	0601M30 - MP55 Casing, 3.0 m, PVC	9'10 1/8"
☑ 90		
☑	0601M30 - MP55 Casing, 3.0 m, PVC	9'10 3/16"
☑ 20		
☑	0601M30 - MP55 Casing, 3.0 m, PVC	9'10 1/8"
☑ 50		
☑	0601M30 - MP55 Casing, 3.0 m, PVC	9'10 1/8"
☑ 30		
☑	0601M30 - MP55 Casing, 3.0 m, PVC	9'10 1/8"
☑ 20		

(c) Westbay Instruments Inc. 2000ed Jul 07 16:59:42 2004

Casing Installation Log
Kleinfelder Consultants

Job No: WB777
Well: R26

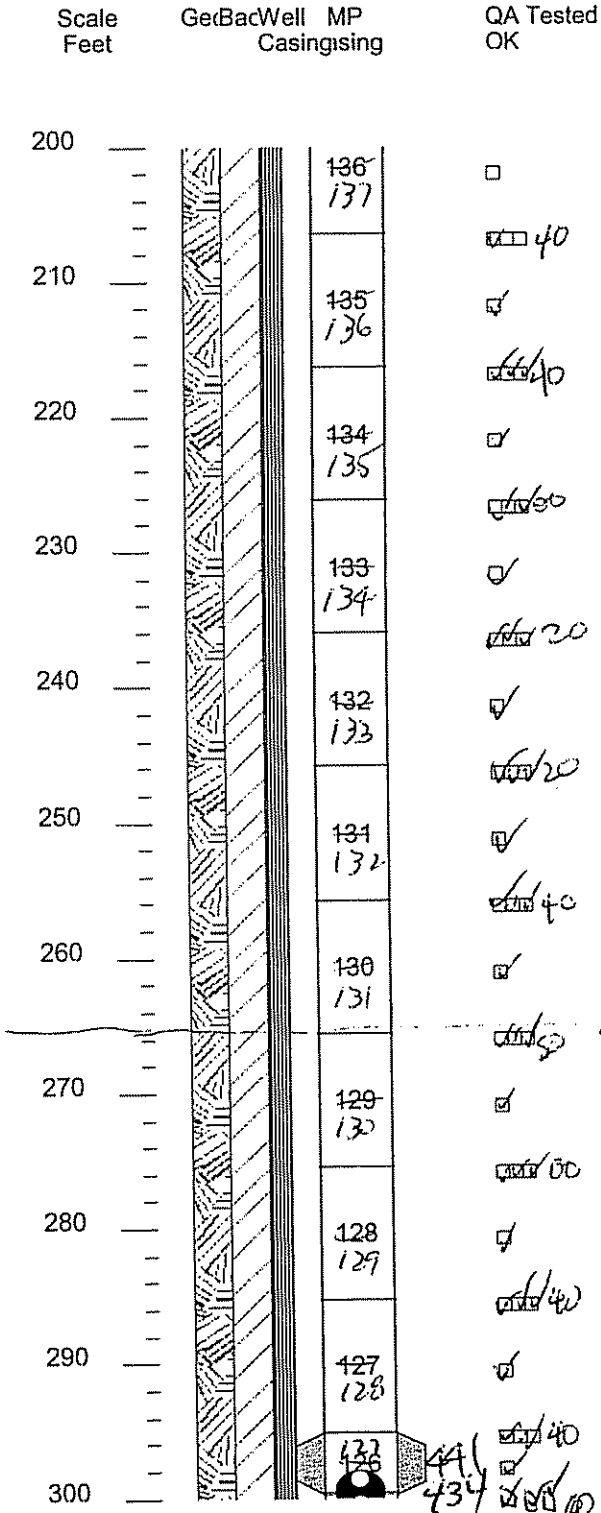

(c) Westbay Instruments Inc. 2000ed Jul 07 16

Casing Installation Log
Kleinfelder Consultants

Job No: WB777
Well: R26

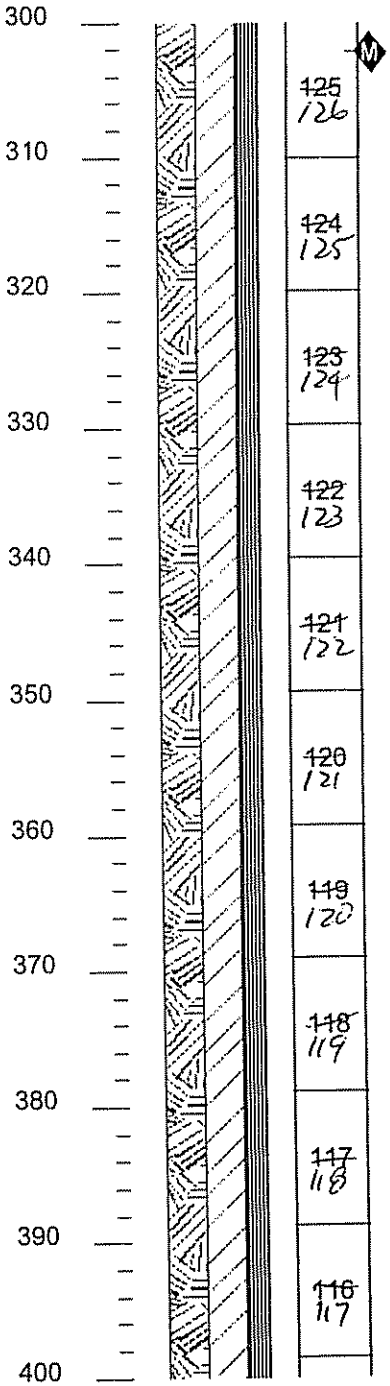

QA Tested OK	MP Casing Description
☑	0601M30 - MP55 Casing, 3.0 m, PVC 10' 3½ inch
☑ 20	LOAD=620 lb
☑	0601M30 - MP55 Casing, 3.0 m, PVC 9'10 3/16"
☑ 30	
☑	0601M30 - MP55 Casing, 3.0 m, PVC 9'10 3/16"
☑ 50	
☑	0601M30 - MP55 Casing, 3.0 m, PVC 9'10 3/16"
☑ 10	
☑	0601M30 - MP55 Casing, 3.0 m, PVC 9'10 3/16"
☑ 00	
☑	0601M30 - MP55 Casing, 3.0 m, PVC 9'10 3/16"
☑ 10	
☑	0601M30 - MP55 Casing, 3.0 m, PVC 9'10 3/16"
☑ 20	
☑	0601M30 - MP55 Casing, 3.0 m, PVC 9'10 3/16"
☑ 95	
☑	0601M30 - MP55 Casing, 3.0 m, PVC 9'10 3/16"
☑ 30	
☑	0601M30 - MP55 Casing, 3.0 m, PVC 9'10 3/16"
☑ 05	

(c) Westbay Instruments Inc. 2000ed Jul 07 16:59:42 2004

Casing Installation Log
Kleinfelder Consultants

Job No: WB777
Well: R26

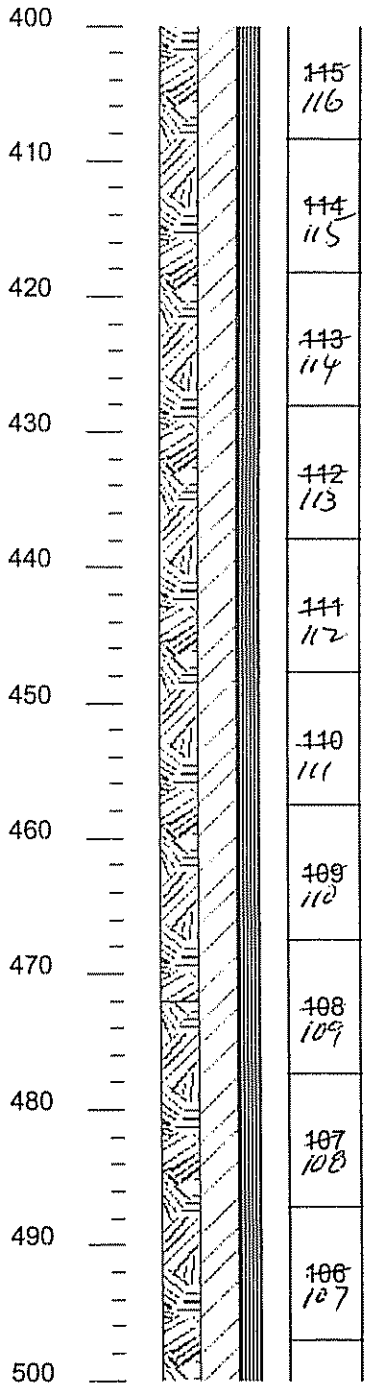

QA Tested OK	MP Casing Description	
☑	0601M30 - MP55 Casing, 3.0 m, PVC	9'10 1/8"
☑	0601M30 - MP55 Casing, 3.0 m, PVC	9'10 1/8"
	LOM=760 lb	
☑	0601M30 - MP55 Casing, 3.0 m, PVC	9'10 3/16"
☑	0601M30 - MP55 Casing, 3.0 m, PVC	9'10 1/8"
☑	0601M30 - MP55 Casing, 3.0 m, PVC	9'10 1/8"
☑	0601M30 - MP55 Casing, 3.0 m, PVC	9'10 1/8"
☑	0601M30 - MP55 Casing, 3.0 m, PVC	9'10 1/8"
☑	0601M30 - MP55 Casing, 3.0 m, PVC	9'10 3/16"
☑	0601M30 - MP55 Casing, 3.0 m, PVC	9'10 1/8"
☑	0601M30 - MP55 Casing, 3.0 m, PVC	9'10 1/8"

(c) Westbay Instruments Inc. 2000ed Jul 07 16:59:42 2004

Casing Installation Log
Kleinfelder Consultants

Job No: WB777
Well: R26

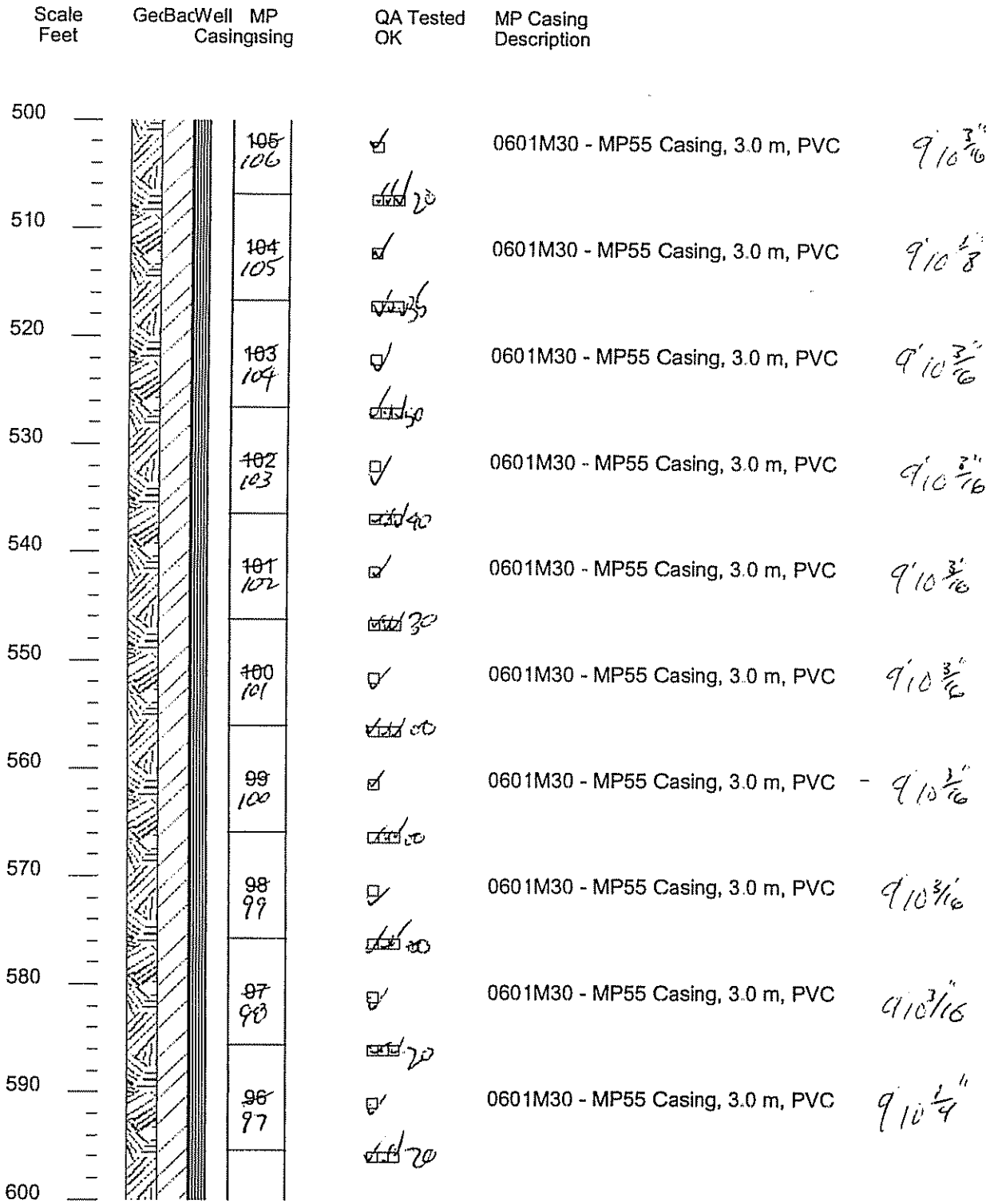

Casing Installation Log
Kleinfelder Consultants

Job No: WB777
Well: R26

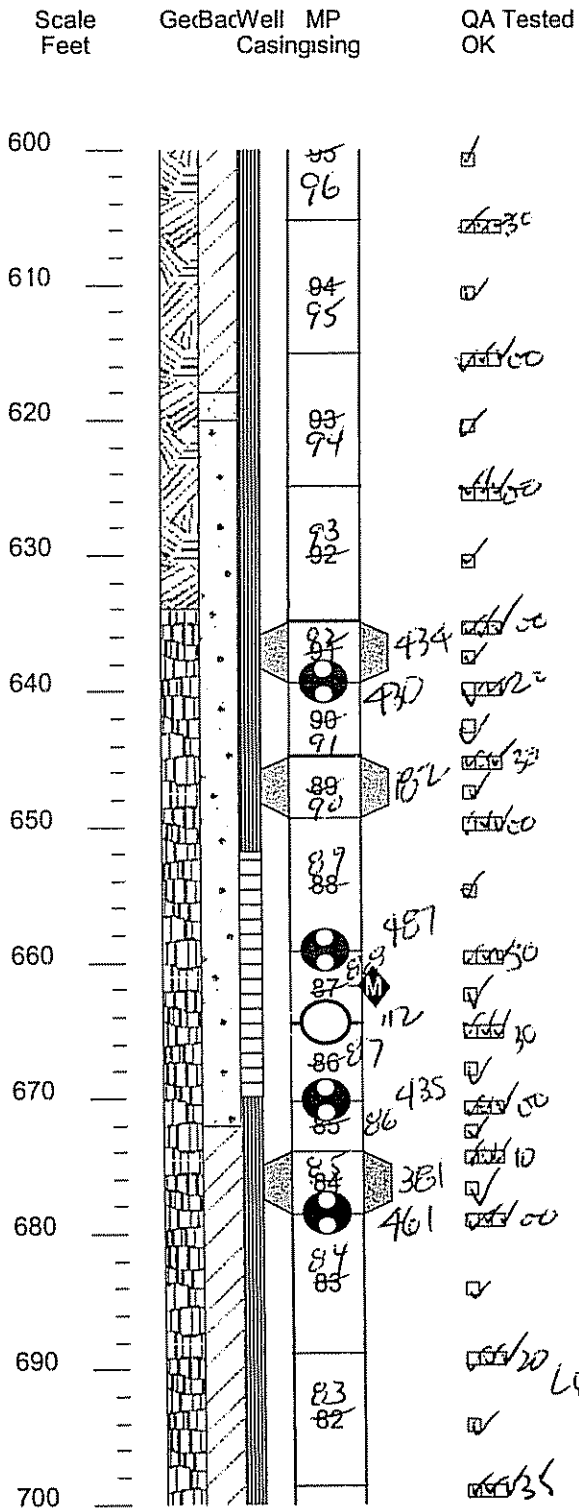

MP Casing Description	
0601M30 - MP55 Casing, 3.0 m, PVC	9' 10 1/4"
0601M30 - MP55 Casing, 3.0 m, PVC	9' 10 1/4"
0601M30 - MP55 Casing, 3.0 m, PVC	9' 10 1/4"
0601M30 - MP55 Casing, 3.0 m, PVC	9' 10 3/16"
0612 - MP55 Packer, Stiffened, SS	4' 6 5/8"
0605 - MP55 Measurement Port with Filter	
0601M15 - MP55 Casing, 1.5 m, PVC	5' 4 5/16"
0612 - MP55 Packer, Stiffened, SS	4' 6 5/8"
0601M30 - MP55 Casing, 3.0 m, PVC	9' 10 1/4"
0605 - MP55 Measurement Port No Filter	
0601M15 - MP55 Casing, 1.5 m, PVC	5' 4 7/16"
0607 - MP55 Hydraulic Pumping Port	
0601M15 - MP55 Casing, 1.5 m, PVC	5' 7 13/16"
0605 - MP55 Measurement Port No Filter	
0601M10 - MP55 Casing, 1.0 m, PVC	3' 8 11/16"
0612 - MP55 Packer, Stiffened, SS	4' 7"
0605 - MP55 Measurement Port WITH FILTER	
0601M30 - MP55 Casing, 3.0 m, PVC	~~9' 10 5/16"~~ 10' 3 5/8"
LOAD = 1100 lb.	
Lunch 1235-1345 - assemble 85-92	
0601M30 - MP55 Casing, 3.0 m, PVC	9' 10 3/8"

21.6 l.
= 53m
~173 ft

Casing Installation Log
Kleinfelder Consultants

Job No: WB777
Well: R26

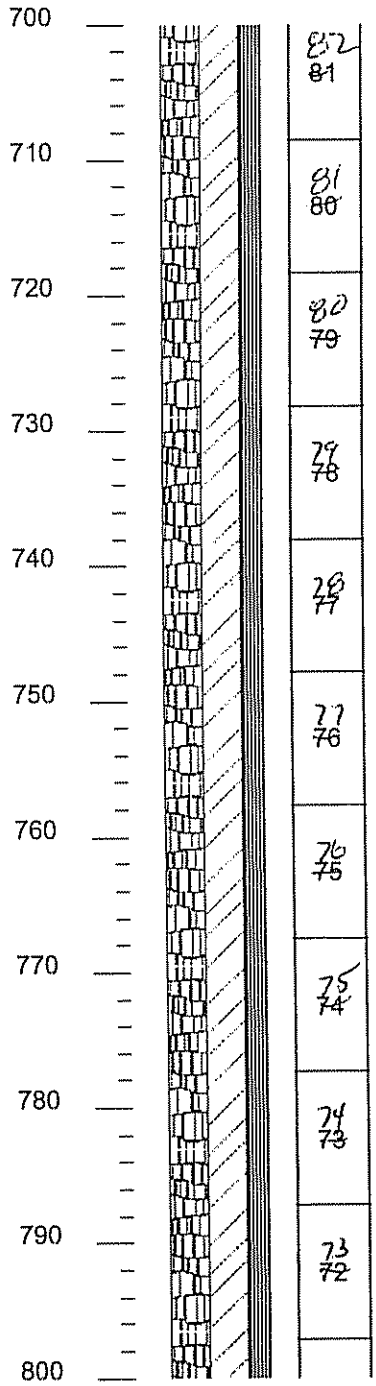

QA Tested OK	MP Casing Description	
☑	0601M30 - MP55 Casing, 3.0 m, PVC	9'10 5/16"
☑	0601M30 - MP55 Casing, 3.0 m, PVC	9'10 5/16"
☑	0601M30 - MP55 Casing, 3.0 m, PVC	9'10 5/16"
☑	0601M30 - MP55 Casing, 3.0 m, PVC	9'10 5/16"
☑	0601M30 - MP55 Casing, 3.0 m, PVC	9'10 5/16"
☑	0601M30 - MP55 Casing, 3.0 m, PVC	9'10 5/16"
☑	0601M30 - MP55 Casing, 3.0 m, PVC	9'10 5/16"
☑	0601M30 - MP55 Casing, 3.0 m, PVC	9'10 5/16"
☑	0601M30 - MP55 Casing, 3.0 m, PVC	9'10 5/16"
☑	0601M30 - MP55 Casing, 3.0 m, PVC	9'10 5/16"
☑	LOAD = 1100 lbs.	

Casing Installation Log
Kleinfelder Consultants

Job No: WB777
Well: R26

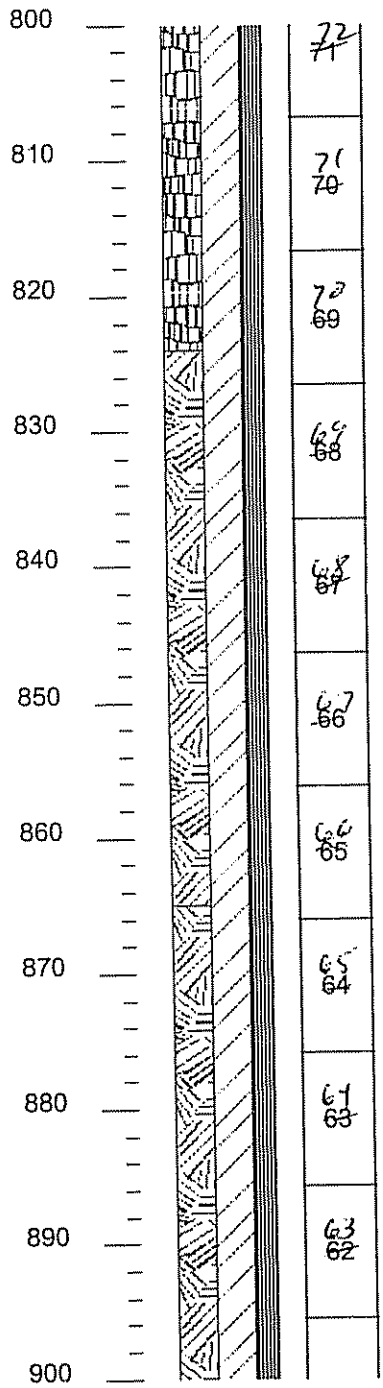

QA Tested OK	MP Casing Description
☑	0601M30 - MP55 Casing, 3.0 m, PVC
☑	0601M30 - MP55 Casing, 3.0 m, PVC
☑	0601M30 - MP55 Casing, 3.0 m, PVC
☑	0601M30 - MP55 Casing, 3.0 m, PVC
☑	0601M30 - MP55 Casing, 3.0 m, PVC
☑	0601M30 - MP55 Casing, 3.0 m, PVC
☑	0601M30 - MP55 Casing, 3.0 m, PVC
☑	0601M30 - MP55 Casing, 3.0 m, PVC
☑	0601M30 - MP55 Casing, 3.0 m, PVC

(c) Westbay Instruments Inc. 2000ed Jul 07 17:01:51 2004

Casing Installation Log
Kleinfelder Consultants

Job No: WB777
Well: R26

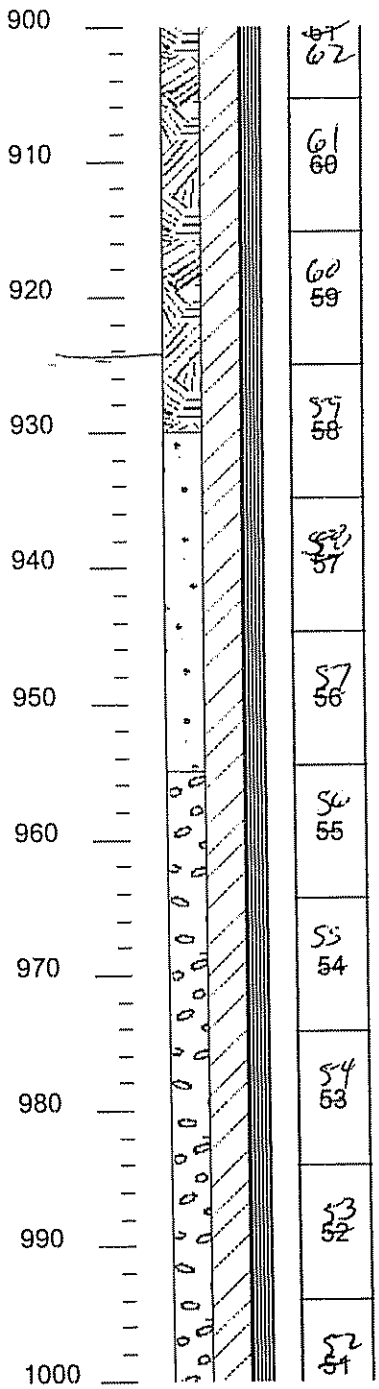

QA Tested OK	MP Casing Description	
☑	0601M30 - MP55 Casing, 3.0 m, PVC	9'10 5/16"
☑ 50		
☑	0601M30 - MP55 Casing, 3.0 m, PVC	9'10 5/16"
☑ 40		
☑	0601M30 - MP55 Casing, 3.0 m, PVC	9'10 5/16"
	END OF #1 RACK	
☑ 40		
☑	0601M30 - MP55 Casing, 3.0 m, PVC	9'10 3/16"
☑ 40		
☑	0601M30 - MP55 Casing, 3.0 m, PVC	9'10 1/4"
☑ 50		
	NMED VISIT 1000 - 1030	
☑	0601M30 - MP55 Casing, 3.0 m, PVC	9'10 1/4"
☑ 20		
☑	0601M30 - MP55 Casing, 3.0 m, PVC	9'10 1/4"
☑ 10		
☑	0601M30 - MP55 Casing, 3.0 m, PVC	9'10 7/16"
☑ 55		
☑	0601M30 - MP55 Casing, 3.0 m, PVC	9'10 3/16"
☑ 50		
☑	0601M30 - MP55 Casing, 3.0 m, PVC	9'10 3/16"
☑ 10		
☑	0601M30 - MP55 Casing, 3.0 m, PVC	9'10 1/4"

Casing Installation Log
Kleinfelder Consultants

Job No: WB777
Well: R26

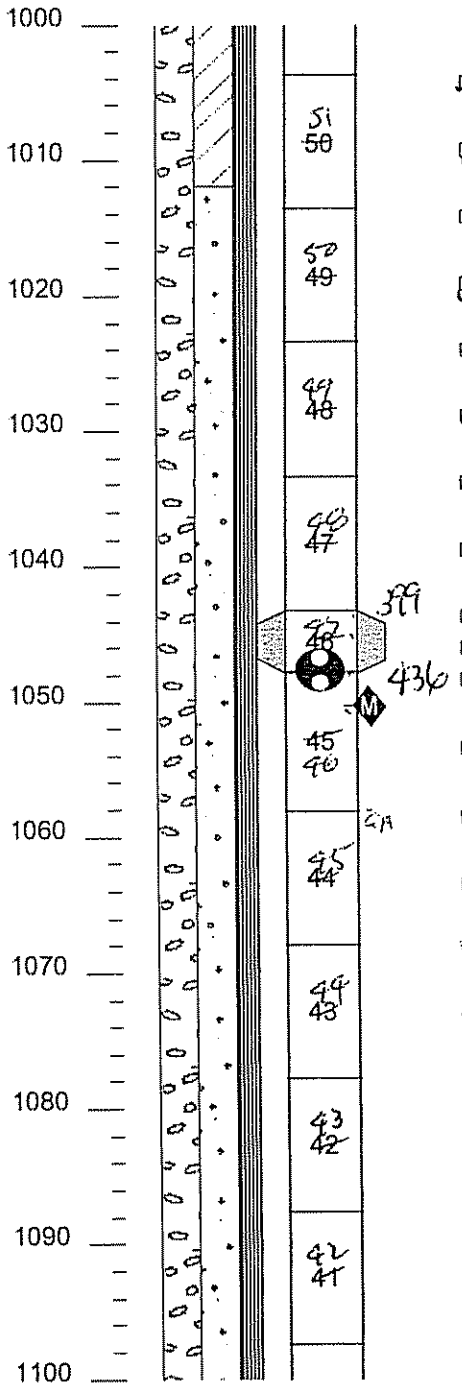

QA Tested OK	MP Casing Description	
		LOAD = 940 lb
☑	0601M30 - MP55 Casing, 3.0 m, PVC	9' 10 3/16"
☑	0601M30 - MP55 Casing, 3.0 m, PVC	9' 10 3/16"
☑	0601M30 - MP55 Casing, 3.0 m, PVC	9' 10 3/16"
☑	0601M30 - MP55 Casing, 3.0 m, PVC	9' 10 3/16"
☑	0612 - MP55 Packer, Stiffened, SS	67"
☑	0605 - MP55 Measurement Port with Filter	0605V4
☑	0601M30 - MP55 Casing, 3.0 m, PVC	10' 3 9/16"
☑	0601M30 - MP55 Casing, 3.0 m, PVC	9' 10 3/4"
☑	0601M30 - MP55 Casing, 3.0 m, PVC	9' 10 3/4"
☑	0601M30 - MP55 Casing, 3.0 m, PVC	9' 10 3/16"
☑	0601M30 - MP55 Casing, 3.0 m, PVC	9' 10 3/4"
		LOAD = 780 lb

Casing Installation Log
Kleinfelder Consultants

Job No: WB777
Well: R26

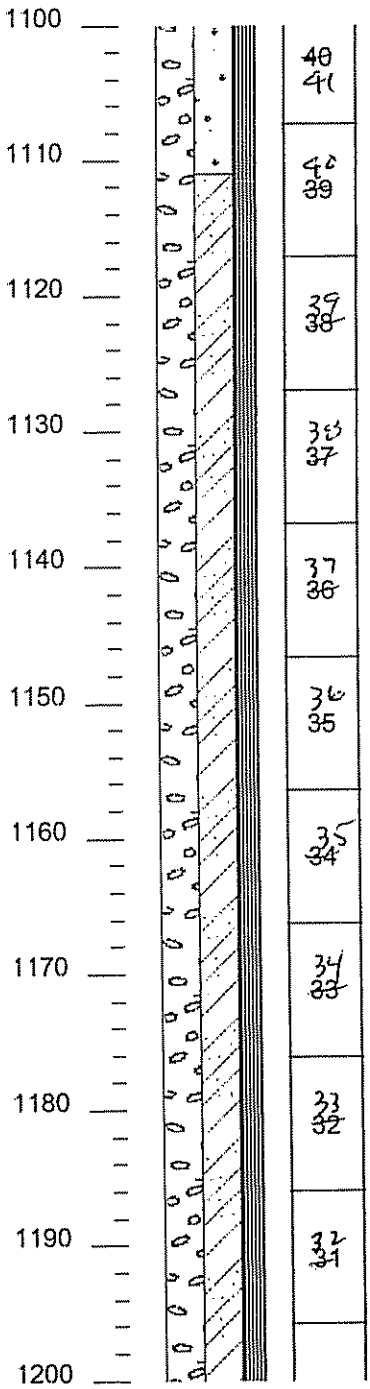

QA Tested OK	MP Casing Description	
☑	0601M30 - MP55 Casing, 3.0 m, PVC	9' 10 1/8"
☑ 35		
☑	0601M30 - MP55 Casing, 3.0 m, PVC	9' 10 1/8"
☑ 35		
☑	0601M30 - MP55 Casing, 3.0 m, PVC	9' 10 3/16"
☑ 15		
☑	0601M30 - MP55 Casing, 3.0 m, PVC	9' 10 3/16"
☑ 05		
☑	0601M30 - MP55 Casing, 3.0 m, PVC	9' 10 3/16"
☑ 10		
☑	0601M30 - MP55 Casing, 3.0 m, PVC	9' 10 3/16"
☑ 10		
☑	0601M30 - MP55 Casing, 3.0 m, PVC	9' 10 3/16"
☑ 10		
☑	0601M30 - MP55 Casing, 3.0 m, PVC	9' 10 3/16"
☑ 05		
☑	0601M30 - MP55 Casing, 3.0 m, PVC	9' 10 1/4"
☑ 05		
☑	0601M30 - MP55 Casing, 3.0 m, PVC	9' 10 1/4"
☑ 10		

0730 July 15 LOAD = 6001b TST = 280 psi
1930h END OF DAY July 14, 2004
LOAD = 680 lb

 H_2O = 12 gallons

Casing Installation Log
Kleinfelder Consultants

Job No: WB777
Well: R26

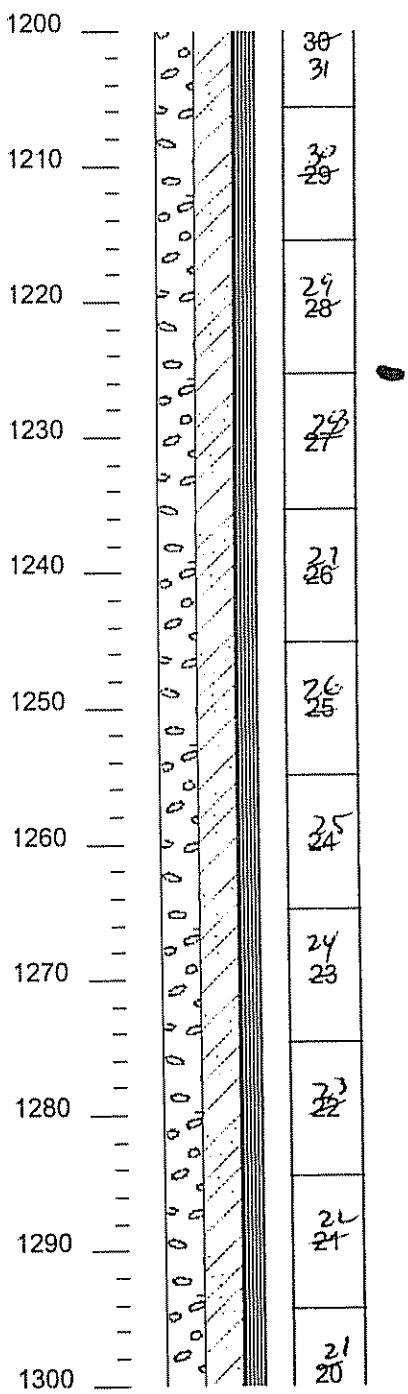

QA Tested OK	MP Casing Description	
☑	0601M30 - MP55 Casing, 3.0 m, PVC	9' 10 3/4"
☑	0601M30 - MP55 Casing, 3.0 m, PVC	9' 10 1/4"
☑	0601M30 - MP55 Casing, 3.0 m, PVC	9' 10 1/4"
☑	0601M30 - MP55 Casing, 3.0 m, PVC	9' 10 1/4"
☑	0601M30 - MP55 Casing, 3.0 m, PVC	9' 10 1/4"
☑	0601M30 - MP55 Casing, 3.0 m, PVC	9' 10 1/4"
☑	0601M30 - MP55 Casing, 3.0 m, PVC	9' 10 1/4"
☑	0601M30 - MP55 Casing, 3.0 m, PVC	9' 10 3/16"
☑	0601M30 - MP55 Casing, 3.0 m, PVC	9' 10 1/4"
☑	0601M30 - MP55 Casing, 3.0 m, PVC	9' 10 1/4"
☑	0601M30 - MP55 Casing, 3.0 m, PVC	9' 10 3/16"

(c) Westbay Instruments Inc. 2000ed Jul 07 17:08:35 2004

Casing Installation Log
Kleinfelder Consultants

Job No: WB777
Well: R26

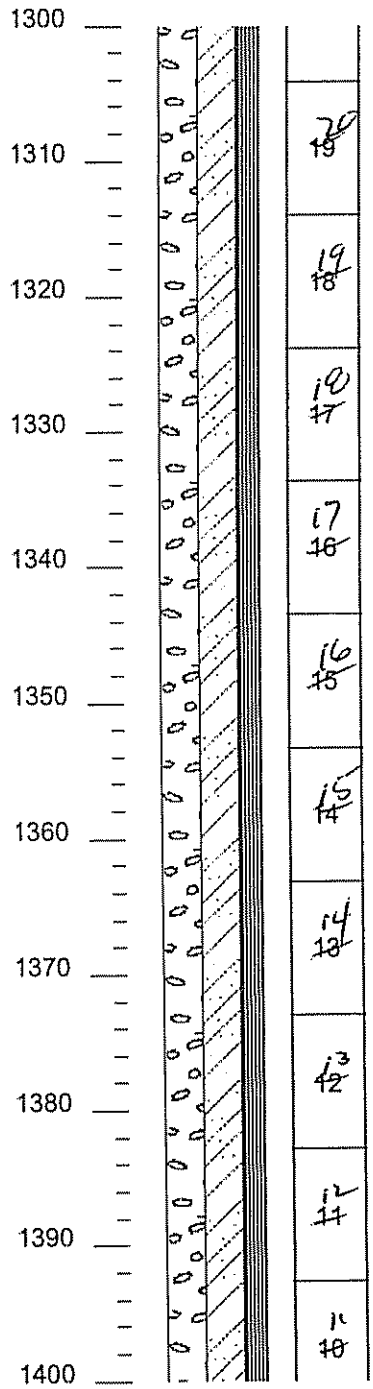

QA Tested OK	MP Casing Description	
45		
☑	0601M30 - MP55 Casing, 3.0 m, PVC	9' 10 3/16"
20		LOAD = 400 lb
☑	0601M30 - MP55 Casing, 3.0 m, PVC	9' 10 1/4"
30		
☑	0601M30 - MP55 Casing, 3.0 m, PVC	9' 10 1/4"
25		
☑	0601M30 - MP55 Casing, 3.0 m, PVC	9' 10 1/4"
30		
☑	0601M30 - MP55 Casing, 3.0 m, PVC	9' 10 1/4"
50		
☑	0601M30 - MP55 Casing, 3.0 m, PVC	9' 10 3/16"
25		
☑	0601M30 - MP55 Casing, 3.0 m, PVC	9' 10 1/4"
35		
☑	0601M30 - MP55 Casing, 3.0 m, PVC	9' 10 1/4"
40		
☑	0601M30 - MP55 Casing, 3.0 m, PVC	9' 10 1/4"
30		
☑	0601M30 - MP55 Casing, 3.0 m, PVC	9' 10 3/16"

(c) Westbay Instruments Inc. 2000ed Jul 07 17:08:35 2004

Casing Installation Log
Kleinfelder Consultants

Job No: WB777
Well: R26

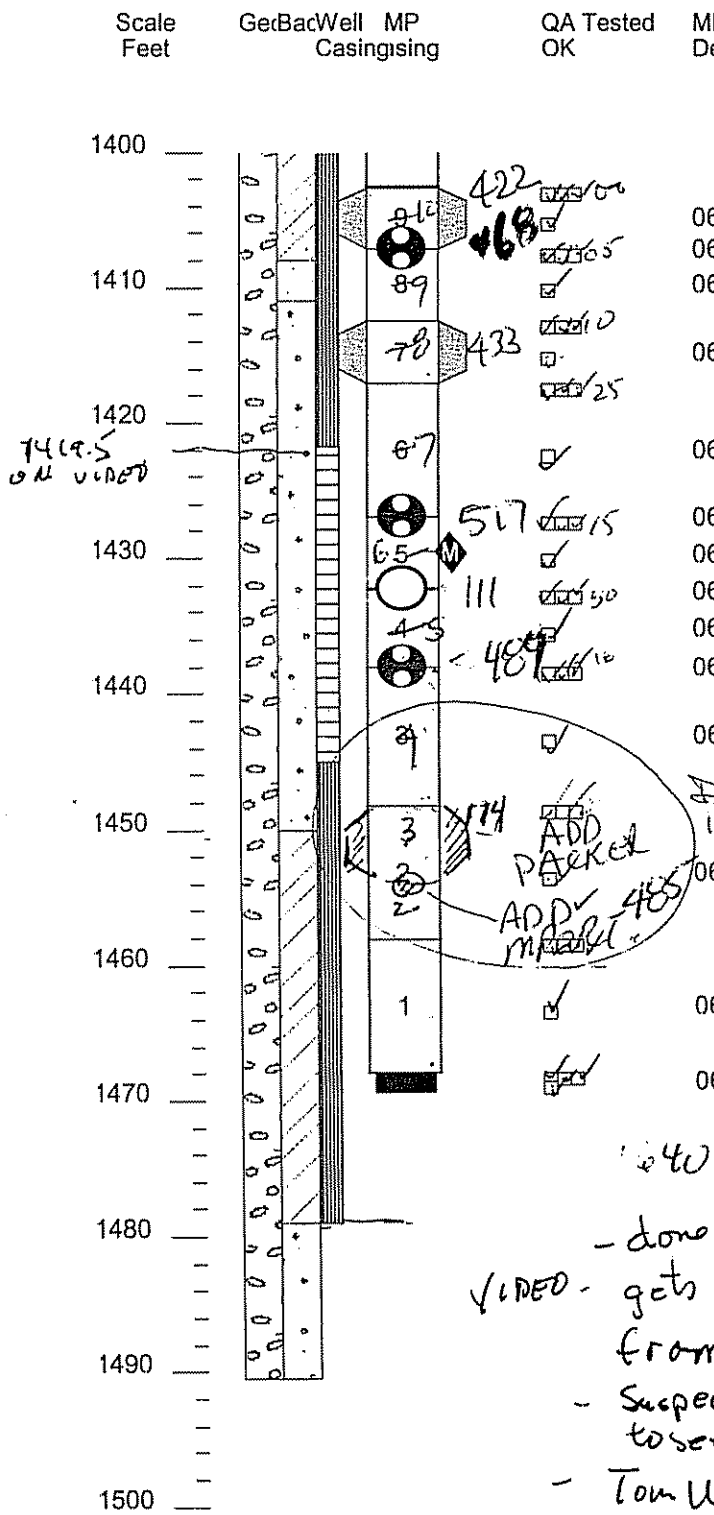

MP Casing Description

0612 - MP55 Packer, Stiffened, SS SN422
0605 - MP55 Measurement Port WITH FILTER
0601M15 - MP55 Casing, 1.5 m, PVC 5' 4 7/16"
0612 - MP55 Packer, Stiffened, SS SN433
0601M30 - MP55 Casing, 3.0 m, PVC 9' 10 1/4"
0605 - MP55 Measurement Port No Filter
0601M15 - MP55 Casing, 1.5 m, PVC 5' 4 1/2"
0607 - MP55 Hydraulic Pumping Port SN111
0601M15 - MP55 Casing, 1.5 m, PVC
0605 - MP55 Measurement Port No filter
No FILTER
0601M30 - MP55 Casing, 3.0 m, PVC 10' 3 5/8" #4
DL 12 July 2004 + PACKER SN174 #3
0601M30 - MP55 Casing, ~~3.0~~ 1.5 m, PVC
MPORT = FILTER 5' 4 3/8" #2
0601M30 - MP55 Casing, 3.0 m, PVC 10' 3 3/16" #1
0603 - MP55 End Plug

1640 hr - start lowering.
- done several hr after pump removed from well
VIDEO - gets murky + cannot see screen from ~1423 ft.
- Suspect that it will clear up with time to settle out
- Tom W. says OK to install as-is.

- TJT Pressure = 260psi.
TEST P = 250psi

Note: Hilpipes have 100% visual interior inspection plus

MP Drift Diagram

Job No. WB777	Monitoring Well No. R-26	Drawn By: DL
Client: Kleinfelder	Project: Hydrogeology Investigation	Date: July 11, 2004
Drift Approval (See MP Casing Installation Log)	Borehole Items:	
	MP Casing Items:	

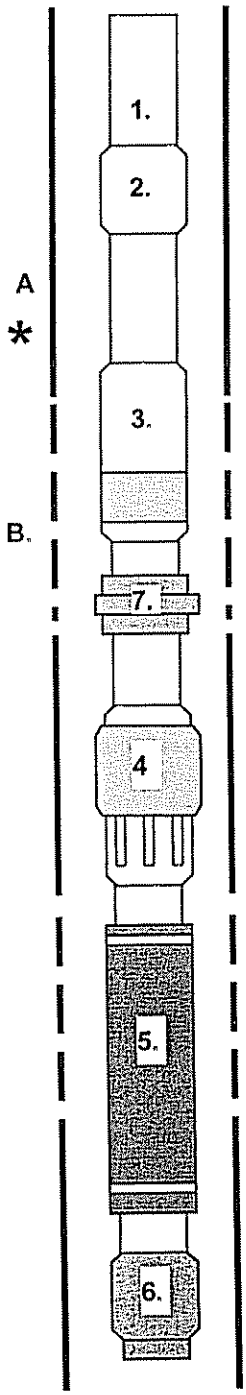

MP System Casing Components				
Item	Model No.	Description	I.D. (in)	O.D. (in)
1.	0601	MP55 Casing	2.25	2.87
2.	0602	MP55 Regular Coupling	2.25	3.6
3.	0605	MP55 Measurement Port Coupling	2.25	3.5
4.	0607	MP55 Hydraulic Pumping Port	2.25	3.5
5.	0612	MP55 Packer, with stiffeners	2.25	4.3
6.	0603	End Plug	2.25	3.6
7.	0608	Magnetic Location Collar	2.9	3.6
Borehole Completion Items				
A.	N/A	Stainless Steel Well Casing*	4.5*	5.0
B.	N/A	Stainless Steel Well Screens, 0.010 in. slot size, pipe-based type.	4.5	5.5

Notes:

1) Confirm that inside pipe joints are smooth. Confirm that the ID of each screen has been gauged and is smooth.

2) The sketches of MP casing components on this Drift Diagram are only to illustrate comparative dimensions. Please refer to the Proposed Casing Log for details on the proposed sequence of MP casing components in the well.

3) Nominal 'drift' for tools to run inside MP55 casing components = 50mm.

4) Well screens are SS ASTM A554 casing with ~3.16 inch diameter perforations drilled through the pipe wall and conventional wire wrap on outside of the pipe.

DL, Westbay Instruments Inc. 2000

PACKER INFLATION RECORD

Client: Kleinfelder Consultants
Site: LANL Grounduater Study
Description: Plastic MP55
Well: R-26
WB Project: WB777
Y Offset Pressure: None
T-Zero = Fri Jul 16 12:29:18 2004

Packer: Blank Test
Packer Depth: Ground Levl
FILE: R26START
Plot By: DC Date: Aug 1/04
Checked By: DGM Date: Aug 5/04
Comment:

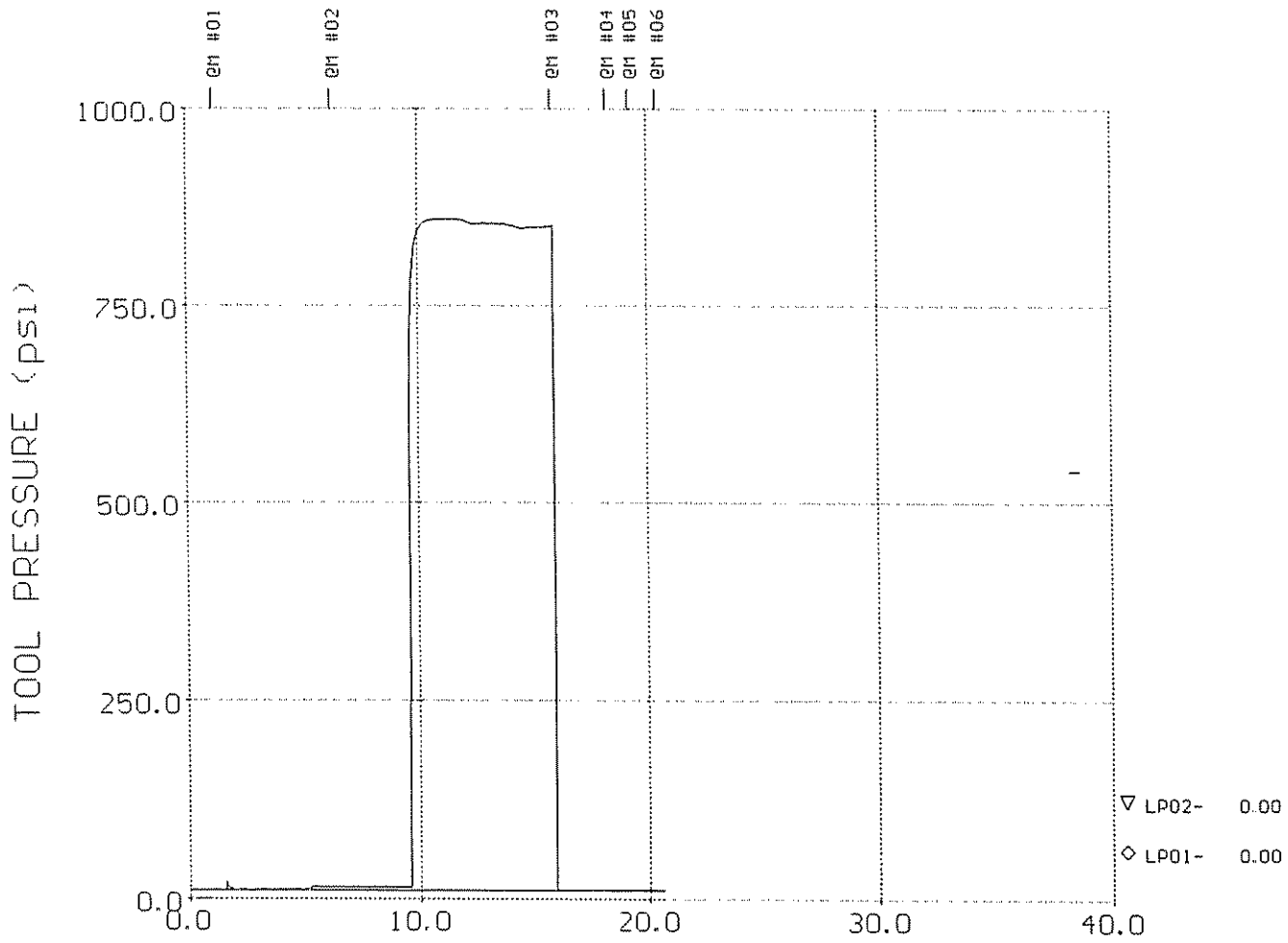

Westbay Instruments Inc.

MP55 Packer Inflation Field Record

BENCH TEST.

Project: ~~LWB 777~~	Client: KLEINFELDER	By: DL / ML	Date: 16 JULY 2004
Location: LANL	Well No. R26	Borehole Diameter: 45-inch steel.	
Packer No. BENCH	Depth: SURFACE	Computer Data File: R26START .WDF	
Inf-Tool No. 2321	Vent Tool No. 1576	Volume Pumped:	Vol Returned
H-B Valve: (P_H) 450	Offset (P_V). 0	Confirm Venting (Vent Tool Data) (Y/N)	
Vent Tool Pressure (Shoe Out, P_O)		Final Inf'n Vol:	Final Press: (P_F)
Comments:		Calc'd Element Pressure ($P_F + P_V - P_O$)	
		Confirm Pkr Valve Closed (Yes/No):	

Software Reminder

Pumping Information

I = Inflate, O = Off, C = Close

Volume (litres)	Pressure			Clock	Comments	
	Line (psig)	Inf. Tool (psia)	Vent Tool (psia)		Tag No.	Text
5.0	850	11.31	—	1329	—	start logging.
						No Leaks.
5.0	850 ↓	11.31		1330:30	1	TIE → I/O/C
						-CONFIRM BOTTOM
						PORT = I, TOP PORT = C
						-OF = NO LEAKS.
						*ARM / SHOE OUT IN
						TEST PORT TIE = O
5.0	530	15.14		1335:30	2	Pump to 900, STOP.
5.4	900	15.26		1338	3	NO LEAKS, TIE → INF
5.4	880	859		1340:20	—	P = STABLE.
5.4	860	850		1345	43	NO LEAKS, TIE → C
5.4	860	11.7		1345:30	—	Observe, No Leaks.
5.4	860	11.7		1347:30	4	VENT LINE.
4.5	0	11.7		1348:30	5	TIE = OFF
						SHOE + ARM IN
4.5	0	11.7		1349:40	6	END

TOP

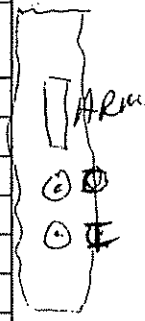

PACKER INFLATION RECORD

Client: Kleinfelder Consultants
Site: LANL Groundwater Study
Description: Plastic MP55
Well: R-26
WB Project: WB777
Y Offset Pressure: None
T-Zero = Fri Jul 16 14:54:36 2004

Packer: MP3
Packer Depth:
FILE: R26_MP3
Plot By: DL Date: 01 AUG 2004
Checked By: DGM Date: 05 AUG 2004
Comment:

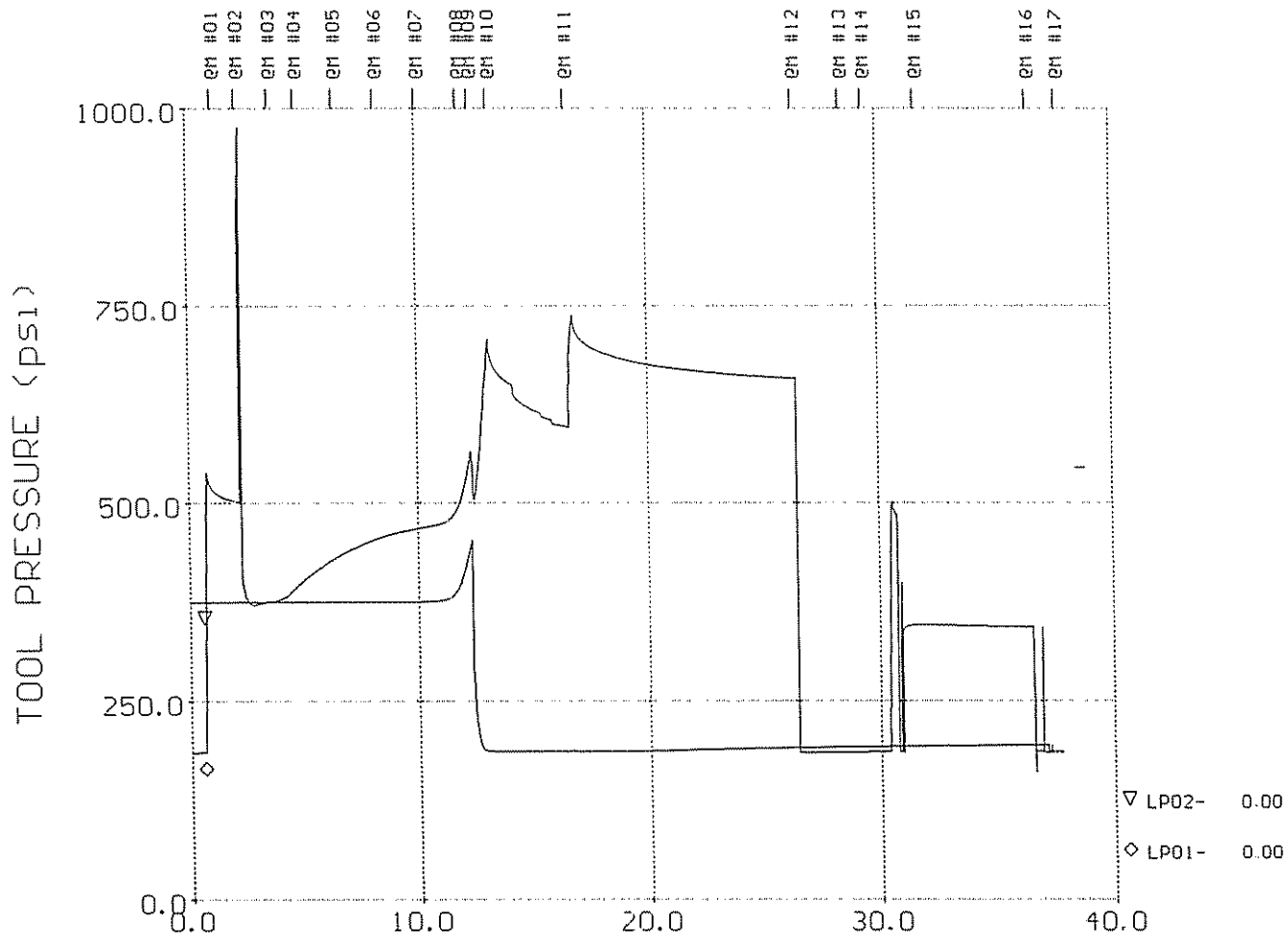

Westbay Instruments Inc.

MP55 Packer Inflation Field Record

Project: WB777	Client: Kleinfelder	By: DL/ML	Date: 16 July 2004
Location: LANL	Well No. R-26	Borehole Diameter: 4.5 inch.	
Packer No. MP3 - 174	Depth: 1448'	Computer Data File: R26-MP3	.WDF
Inf-Tool No. 2321	Vent Tool No. 1576	Volume Pumped:	Vol Returned
H-B Valve: (P_H) 450	Offset (P_V)	Confirm Venting (Vent Tool Data) (Y/N)	Y
Vent Tool Pressure (Shoe Out, P_O) 324.93		Final Inf'n Vol: 3.0	Final Press: 658 (P_F)
Comments:		Calc'd Element Pressure ($P_F + P_V - P_O$)	283
		Confirm Pkr Valve Closed (Yes/No):	Yes

TARGET = 375 + 250 = 625 psi

Software Reminder

I = Inflate, O = Off, C = Close

Pumping Information

Volume (litres)	Pressure			Clock	Comments	
	Line (psig)	Inf. Tool (psia)	Vent Tool (psia)		Tag No.	Text
0	0	184.2	375	1555:00	—	START LOGGING,
						TIE - SHOE OUT.
0	0	523	375	1555:30	1	Pump to 600.
0.7	600	502	↓	1556:40	2	TIE → I. Pkr Valve opened,
0.7	180	374	↓	1558:00	3	
1.0	~~350~~	396	↓	1559:20	4	
1.5	400	431		1601:00	5	
2.0	~~430~~	455		1602:50	6	
2.5	450	468		1604:40	7	
3.0	480	497	420	1606:25	8	-See squeeze start
3.2	500	565	470	1607:00	9	-EMS Valve open.
3.4	600	685	186	1607:49	10	TIE=OFF, STOP Pump
3.4	600	597	186	1611:00	11	TIE=I,
3.4	570	727	186	1611:35	12	TIE=OFF
3.4	570	681	186	1614	13	EMS VALVE CLOSE
3.4	560	661.2	189	1619	~~14~~	Pump to 900
3.8	900	658	190	1621	12	TIE → CLOSE
3.8	880	184	191	1621:20	—	
3.8	870	184	191.2	1623	13	VENT LINE
3.0	0	184	191.6	1625	14	TIE SHOE W/OFF/ OUT.
						Set P1, I → OFF
3.0	0	345	192.4	1626:20	15	OBSERVE.
3.0	0	343	193.9	1631:20	16	OK. SHOES IN AIR/GAS.
3.0	0	184.4	186.1	1632:20	17	END

PACKER INFLATION RECORD

Client: Kleinfelder Consultants
Site: LANL Groundwater Study
Description: Plastic MP55
Well: R-26
WB Project: WB777
Y Offset Pressure: None
T-Zero = Sat Jul 17 06:42:17 2004

Packer: MP8
Packer Depth:
FILE: R26_MP8
Plot By: DC Date: 01 AUG 2004
Checked By: DGM Date: 05 AUG 2004
Comment:

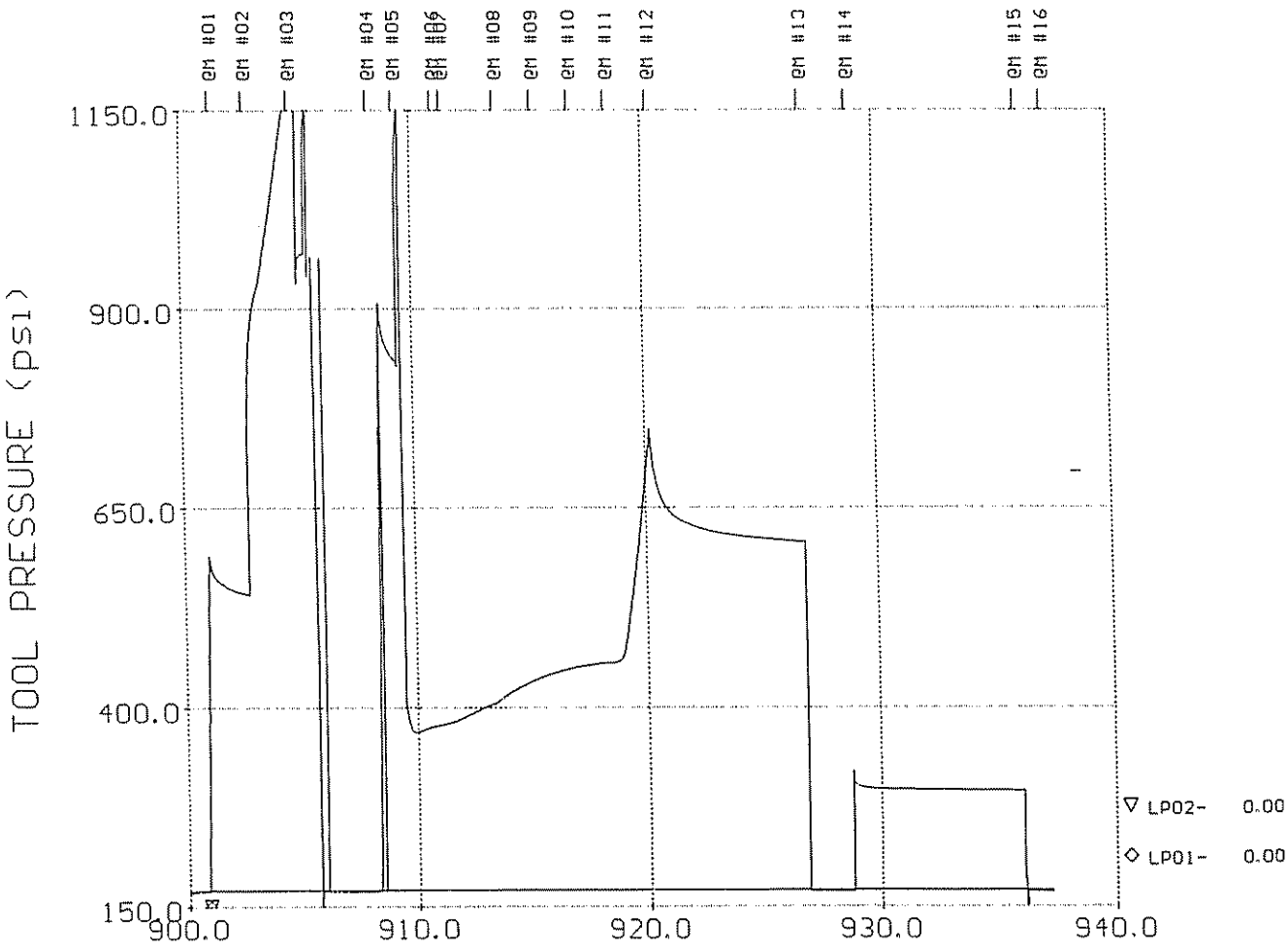

Westbay Instruments Inc.

MP55 Packer Inflation Field Record

Project: 777	Client: KLEINFELDER	By: DC/MC	Date: 17 July 2004
Location: LANL	Well No. R26	Borehole Diameter: 4.5 inch.	
Packer No. MP8-433	Depth: 1402 1412	Computer Data File: R26_MP8.WDF	
Inf-Tool No. 2321	Vent Tool No. 1576	Volume Pumped: _____	Vol Returned _____
H-B Valve: (P_H) 450	Offset (P_V) _____	Confirm Venting (Vent Tool Data) (Y/N) N	
Vent Tool Pressure (Shoe Out, P_O) Calc 358		Final Inf'n Vol: 3.0	Final Press: 607 (P_F)
Comments: No Squeeze Relief needed.		Calc'd Element Pressure ($P_F + P_V - P_O$) 249	
		Confirm Pkr Valve Closed (Yes/No): Y	

607 − 358 = 249

TARGET = 358 + 250 = 608

FILL = 730

Software Reminder

I = Inflate, O = Off, C = Close

Pumping Information

Volume (litres)	Pressure			Clock	Comments	
	Line (psig)	Inf. Tool (psia)	Vent Tool (psia)		Tag No.	Text
0	0	168.2	170.25	0742:30	—	start Logging, Tie Shoe Out.
0	0	581		0743:30	1	Pump TO 600
0.5	600	545		0745:00	2	Tie → I No open
						Pump.
0.9	900	1165.0		0746:50	3	stop pumping. Tie → OUT, Re-check
0.9	860	168.6		0750:30	4	Tie shoe out.
0.9	860	852		0751:30	5	Tie → ~~OUT~~ INF. - Valve opened.
0.9	170	327		0753:10	6	START PUMPING
1.0	250	379		0753:30	7	
1.5	400	409		0755:55	8	
2.0	450	435		0757:30	9	
2.5	460	449		0759:25	10	
3.0	470	455		0800:45	11	
3.6	600	730		0802:35	12	Tie → 0, STOP PUMP
3.6	590	610		0808	—	pump to 1000
4.0	1000	607		0809	13	Tie → C
4.0	970	168		0810	—	VENT LINE
3.0	0	168		0811	14	Tie → OFF.
3.0	0	295				OBSERVE
3.0	0	295		0818	15	OK. SHOE IN.
3.0	0	168	170.3	0819:30	16	END.

PACKER INFLATION RECORD

Client: Kleinfelder Consultants
Site: LANL Groundwater Study
Description: Plastic MP55
Well: R-26
WB Project: WB777
Y Offset Pressure: None
T-Zero = Sat Jul 17 08:23:31 2004

Packer: MP10
Packer Depth:
FILE: R26_MP10
Plot By: DL Date: 01 AUG 2004
Checked By: DGM Date: 05 AUG 2004
Comment:

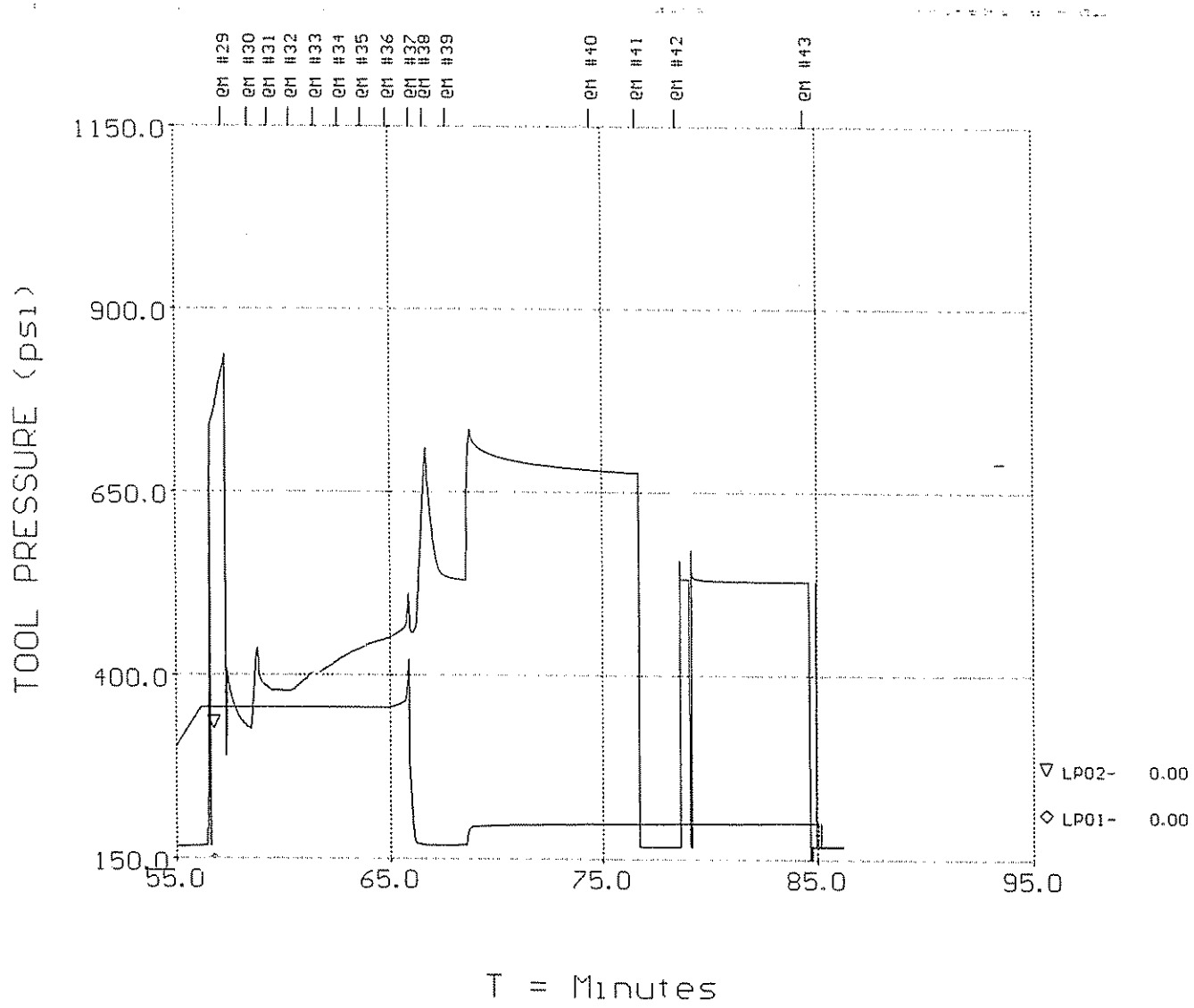

Westbay Instruments Inc.

MP55 Packer Inflation Field Record

Project: 777 Client: KLEINFELDER	By: DL/ML Date: 17 JULY 2004
Location: LANL Well No. R26	Borehole Diameter: 4.5 inch
Packer No. MP10-422 Depth: 1402	Computer Data File: R26_MP10 .WDF
Inf-Tool No. 2321 Vent Tool No. 1576	Volume Pumped: ____ Vol Returned ____
H-B Valve: (P_H) 450 Offset (P_V) —	Confirm Venting (Vent Tool Data) (Y/N) Y
Vent Tool Pressure (Shoe Out, P_O) 355	Final Inf'n Vol: 3.2 Final Press: 676 (P_F)
Comments:	Calc'd Element Pressure ($P_F + P_V - P_O$) 321
	Confirm Pkr Valve Closed (Yes/No): Y

TARGET = 355 + 250 = 605

676 − 355 = 321

Software Reminder
I = Inflate, O = Off, C = Close

Pumping Information

Volume (litres)	Pressure Line (psig)	Pressure Inf. Tool (psia)	Pressure Vent Tool (psia)	Clock	Comments Tag No.	Comments Text
						TIE = OFF
0	0	164.0	165.6	0828:30	—	Start recording, Pump to 600
0.5	600	164	165	0829:50	1	SHOES OUT.
0.5	600	936↓	355.6	0831:00	2	TIE = I
						Looks like 'cake' face seal.
0.5	120	334	355	0833:15	3	TIE = O, Pump to ~~700~~ 600
1.0	600	338	355	0834	4	TIE = C., OFF
1.0	600	163	355	0835	5	TIE SHOE IN/OUT. TOP UP.
1.0	180	513↑	355	0837:30	6	Pump to 600
0.5	600	541	355	0839	7	TIE → I.
0.5	160	356	355	0840:30	8	Start pumping.
1.0	440	391	355	0841:55	9	
1.5	470	422		0843:10	8	
2.0	500	444	355	0844:30	9	
2.5	510	456	355	0845:55	10	
3.0	524	539	436	0847:10	11	EMS OPEN.
3.8	580	536	166	0849:50	12	See strange P drop/rise/drop.
3.8	540	432	255	0851:30	13	See EMS P jump up. Close EMS.
3.8	540	410	355	0854:40	14	Pump to 900.
4.2	900	405	355	0855:40	15	TIE → C ~~RE SHOES IN~~
4.2	900	165	355	0856:30	16	TIE → O, SHOES IN.
						See TIE suction - seal was ok
4.2	900	165	166.8	0858	17	SHOES OUT. - RE-LAND TIE
4.2	880	1030	355	0900:30	18	See P. decrease. → Valve open?
						TIE → I

Westbay Instruments Inc.

MP55 Packer Inflation Field Record Part 2

Project: 777 Well No. 826 Packer No. MP10-422 Date: 17 JULY 2004

Software Reminder

Pumping Information I = Inflate, O = Off, C = Close

Volume (litres)	Pressure			Clock	Comments	
	Line (psig)	Inf. Tool (psia)	Vent Tool (psia)		Tag No.	Text
4.2	250	417	351	0902:30	19	start pump.
4.5	420	422	351	0903:45	20	
5.0	~~434~~	433	355	0905:10	21	
5.5	490	440	351	0906:20	22	
6.0	500	445	355	0907:50	23	
6.5	510	450	358	0909:20	24	
7.0	520	456	361	0910:45	25	
7.5	530	506	414	0911:45	26	EMS-OPEN/CLOSE/O/C
8.0	530	467	386	0913:15	27	STOP PUMP, TOP SP.
8.0	~~250~~ ~~434~~	433	355	0915.00	28	TIE OFF, SHOE IN/OUT.
						SHOE IN/RELEASE/OUT
						~~SP~~ - Leaky face seal?
						SHOES IN.
UP 3'	BLANK TEST		LOOKS		OK	
	LANDS OK AT		1410'			
						SHOES OUT
1.0	330	772	355,5	0925:40	29	TIE → I.
1.0	200	330	351	0927	30	
1.5	500	378	355	0928	31	
2.0	500	378	351	0929	32	
2.5	510	399	351	0930:10	33	
3.0	530	424	351	0931:15	34	
3.5	550	437	355	0932:20	35	
4.0	560	449	355	0933:30	36	
4.5	570	459	400	0934:40	37	EMS OPEN
4.7	600	676	168	093520	38	TIE-OFF STOP PUMP.
4.7	600	532	168	0936:30	39	EMS CLOSE.
4.7	600	530	169	0937:10	~~40~~	TIE - I
4.7	550	729	193	0937:27	41	TIE-O
4.75	560	681	197	943	40	PUMP TO 600

Westbay Instruments Inc.

MP55 Packer Inflation Field Record Part 2

Project: 777 Well No. R26 Packer No. MP10-422 Date: 17 Jul 2014

Software Reminder

Pumping Information

I = Inflate, O = Off, C = Close

Volume (litres)	Pressure			Clock	Comments	
	Line (psig)	Inf. Tool (psia)	Vent Tool (psia)		Tag No.	Text
5.1	900	676	198	0945:00	41	TIE = C
5.1	900	167	198	0946	–	VENT.
4.2	0	167	199	0947	42	TIE = O
4.2	0	531	199	0948		OBSERVE, OK. PKR valve closed OK
4.2	0	527	199	0953	43	SHOES IN
4.2	0	167.14	168.92	0954	44	END

PACKER INFLATION RECORD

Client: Kleinfelder Consultants
Site: LANL Grounduater Study
Description: Plastic MP55
Well: R-26
WB Project: WB777
Y Offset Pressure: None
T-Zero = Sat Jul 17 09:25:59 2004

Packer: MP47
Packer Depth:
FILE: R26_MP47
Plot By: DL Date: 01 AUG 2004
Checked By: DGM Date: 05 AUG 2004
Comment:

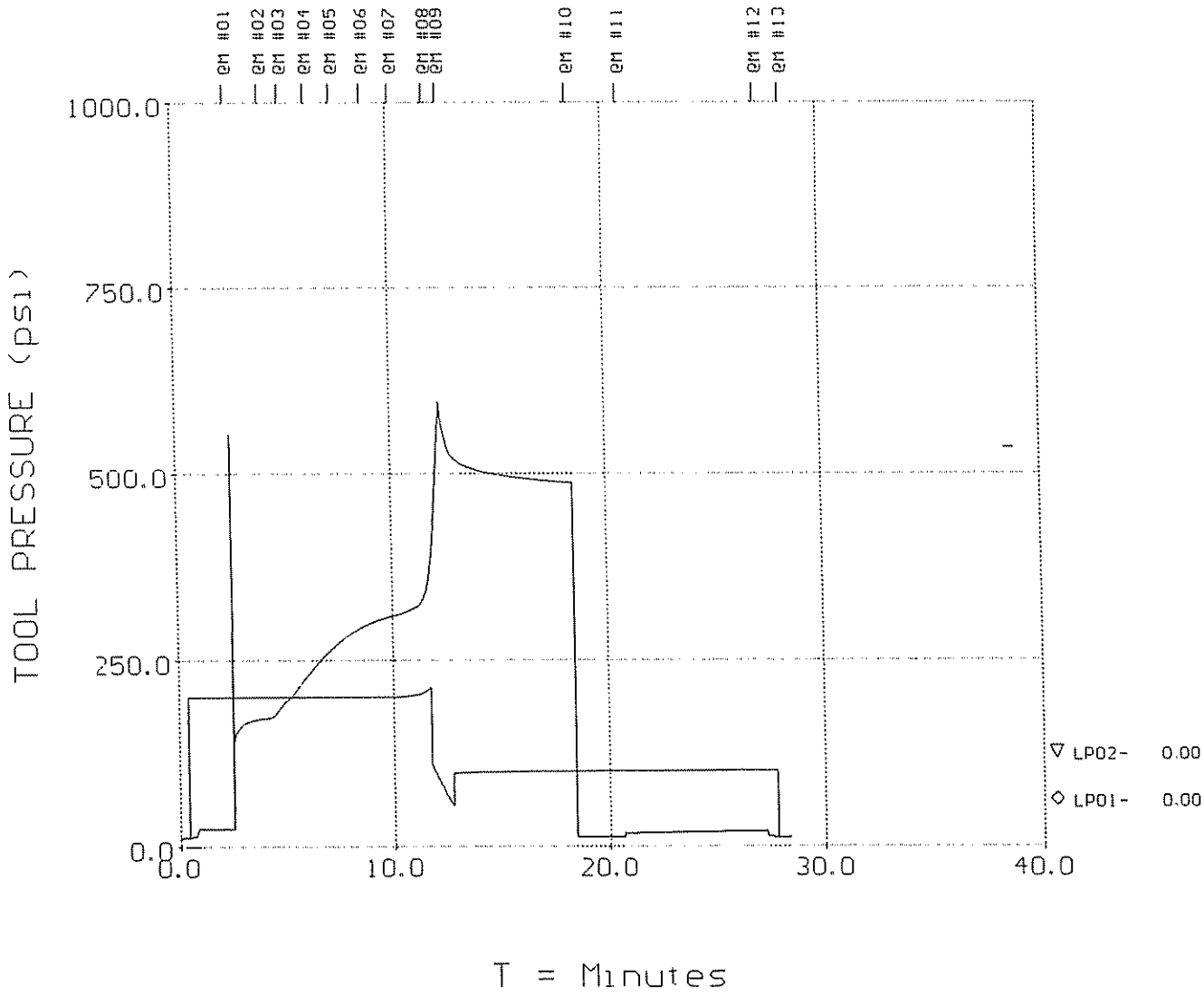

Westbay Instruments Inc.

MP55 Packer Inflation Field Record

Project: 777	Client: KLEINFELDER	By: DC/ML	Date: 17 JULY 2004
Location: LANL	Well No. R26	Borehole Diameter: 4.5 inch	
Packer No. MP47-399	Depth: 1043	Computer Data File: R26-MP47 .WDF	
Inf-Tool No. 2321	Vent Tool No. 1576	Volume Pumped: ____	Vol Returned ____
H-B Valve: (P_H) 450	Offset (P_V) -0	Confirm Venting (Vent Tool Data) (Y/N) Y	
Vent Tool Pressure (Shoe Out, P_O) 200		Final Inf'n Vol: 3.4	Final Press: 488 (P_F)
Comments:		Calc'd Element Pressure (P_F +P_V- P_O) 288	
		Confirm Pkr Valve Closed (Yes/No): Y	

TARGET = 200+250 = 450

Software Reminder

Pumping Information

I = Inflate, O = Off, C = Close

Volume (litres)	Pressure			Clock	Comments	
	Line (psig)	Inf. Tool (psia)	Vent Tool (psia)		Tag No.	Text
0	0	12.14	11.75	1026	—	Start logging SHOES OUT.
0	0	24.7	200.12	1027	1	Pump to 600.
0.5	600	23.8	200.12	1028:30	1	TIE = INF.
0.5	130	171	~~200~~	1030	2	Start Pump.
1.0	420	194	200	1031:00	3	
1.5	460	234	200	1032:14	4	
2.0	510	270	200	1033:25	5	
2.5	530	296	200	1034:50	6	
3.0	550	309	200	1036:10	7	
3.2	580	390	190	1037:50	8	EMS OPEN
4.0	630	575	76.5	1038:20	9	TIE=OFF. PUMP OFF, EMS CLOSE
4.0	600	491	99	1043	—	Pump to 900
4.3	900	488	100	1044:20	10	
4.3	900	12.7	100	1045:20	—	VENT.
3.4	0	12.7	100	1046:20	11	TIE-OFF
3.4	0	18.7	101	1047	—	OBSERVE - OK.
						PKR valve is closed
34	0	19	101	1053	12	All OK. SHOES IN
3.4	0	12.14	11.6	1054	13	END

PACKER INFLATION RECORD

Client: Kleinfelder Consultants
Site: LANL Groundwater Study
Description: Plastic MP55
Well: R-26
WB Project: WB777
Y Offset Pressure: None
T-Zero = Sat Jul 17 13:14:46 2004

Packer: MP85
Packer Depth:
FILE: R26MP85B
Plot By: DL Date: 01 AUG 2004
Checked By: JGM Date: 05 AUG 2004
Comment:

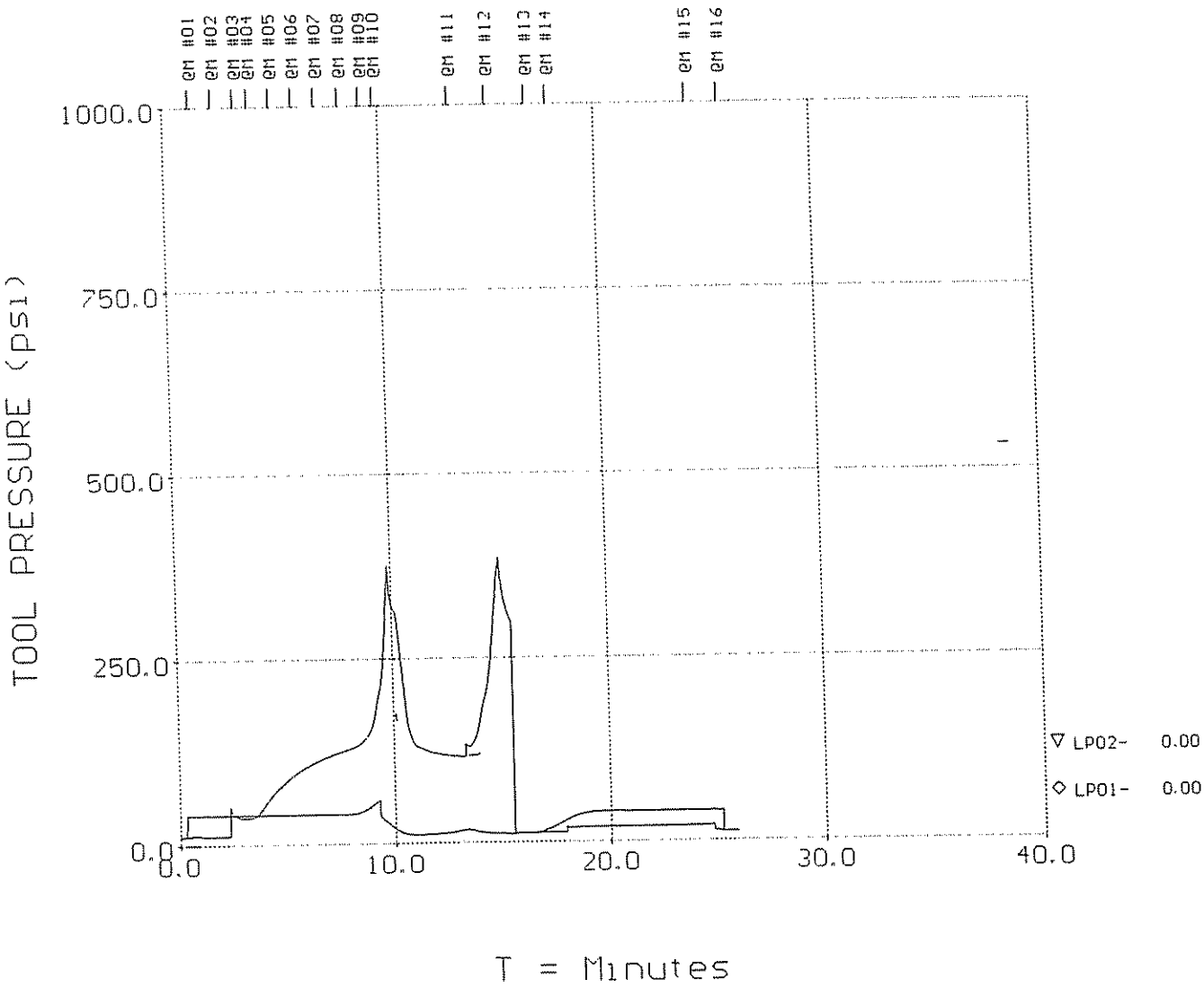

Westbay Instruments Inc.

MP55 Packer Inflation Field Record

Project: 777	Client: KLEINFELDER	By: DL/ML	Date: 17 July 2004
Location: LANL	Well No. R26	Borehole Diameter: 4.5 in	
Packer No. 85-381	Depth: 674	Computer Data File: R26MP85B	.WDF
Inf-Tool No. 2324	Vent Tool No. 1576	Volume Pumped:	Vol Returned
H-B Valve: (P_H) 450	Offset (P_V) 0	Confirm Venting (Vent Tool Data) (Y/N) Y	
Vent Tool Pressure (Shoe Out, P_O) 40		Final Inf'n Vol: 3.7	Final Press: 335 (P_F)
Comments: Pkr Valve Prev. Opened		Calc'd Element Pressure ($P_F + P_V - P_O$) est 290	
		Confirm Pkr Valve Closed (Yes/No): Y	

250 + 40 = 290

Software Reminder

I = Inflate, O = Off, C = Close

Pumping Information

Volume (litres)	Pressure: Line (psig)	Pressure: Inf. Tool (psia)	Pressure: Vent Tool (psia)	Clock	Comments: Tag No.	Comments: Text
0	0	12.1	11.5	1414:40	—	Start logging, Shoes Out.
0	0	11.9	40A	1416	1	Pump to 600
0.7	600	11.9	40.7	1417	2	TIE = I.
0.7	180	36.8	40.7	1418	3	
1.0	450	54	40.7	1418:40	4	
1.5	500	84	40.7	1419:45	5	
2.0	520	105	40.5	1420:45	6	
2.5	540	119	40.5	1421:50	7	
3.0	550	131	41.9	1422:53	8	
3.5	570	170	56	1423:55	9	EMS - OPEN
3.8	610	350	23.2	1424:35	10	TIE = OFF, Pump OFF.
						See leaky behaviour - P drop
3.8	600	127	11.3	1426:00	—	
3.8	600	117	14.	1428	11	Stable P, TIE = I. Start pump
4.3	600	375	33.9	1429:50	12	TIE = OFF - Pump to 600
4.6	900	335	11.4	1430:35	13	TIE = C, STOP PUMP.
4.6	900	12.4	15.1	1431:30	13	VENT LINE, EMS - CLOSE.
3.7	0	12.5	20.4	1432:20	14	TIE = OFF
3.7	0	19.07	31.4	1432:50	—	OBSERVE - all stable.
3.7	0	20.1	40.4	1433:39	15	Pkr valve OK. SHOES IN
3.7	0	11.9	11.6	1440:30	16	END.

NOTE: Suspect HIGH-P leak at INF. Face Seal; so Pkr P equilibration not possible. INFLATE, TIE = O, VALVE WITH NO P-equilibration.

PACKER INFLATION RECORD

Client: Kleinfelder Consultants
Site: LANL Groundwater Study
Description: Plastic MP55
Well: R-26
WB Project: WB777
Y Offset Pressure: None
T-Zero = Sat Jul 17 13:51:01 2004

Packer: MP90
Packer Depth:
FILE: R26_MP90
Plot By: DL Date: 01 AUG 2004
Checked By: DGM Date: 05 AUG 2004
Comment:

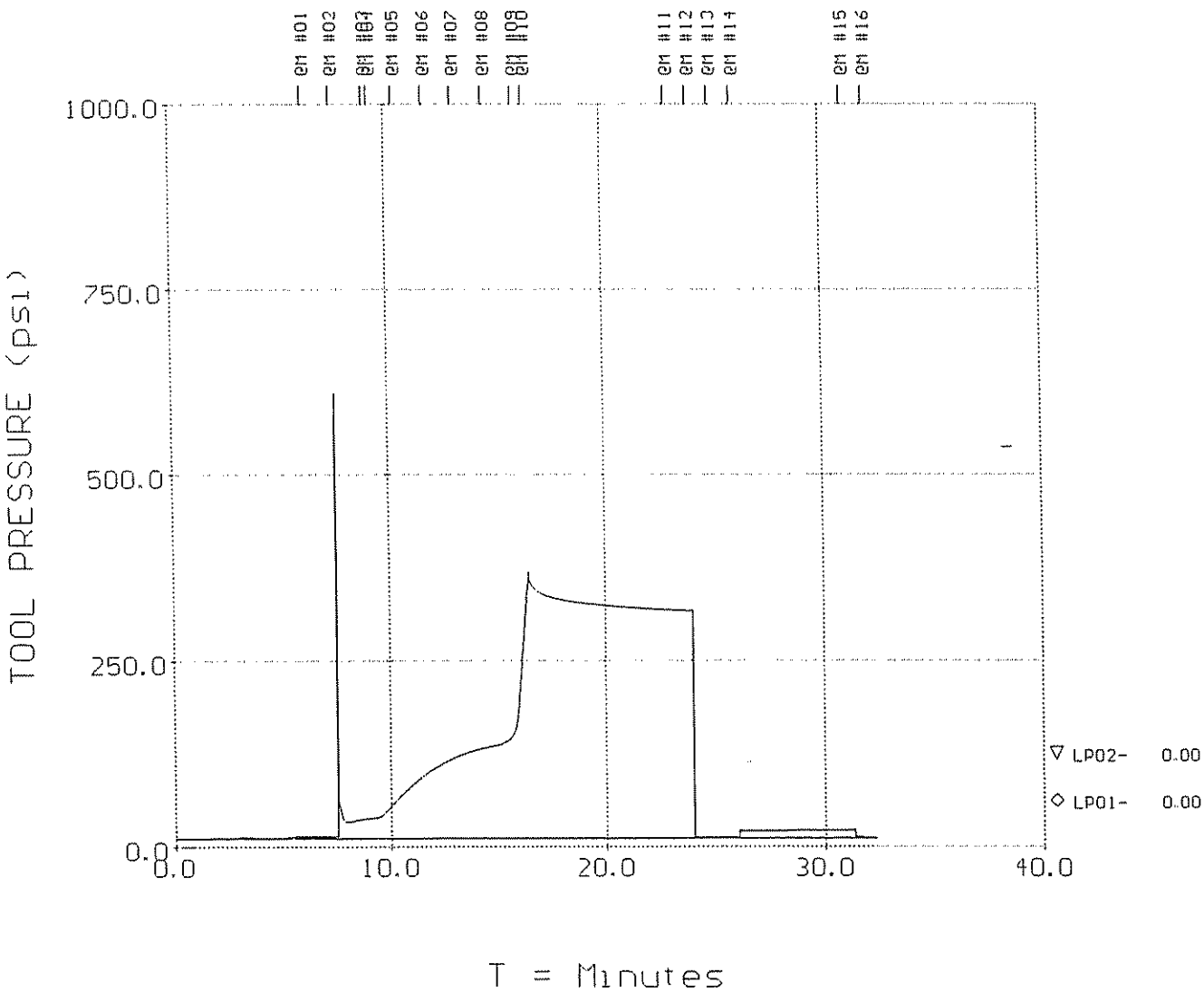

Westbay Instruments Inc.

MP55 Packer Inflation Field Record

Project: 277	Client: KLEINFELDER	By: DL / ML	Date: 17 JULY 2009
Location: LANL	Well No. R26	Borehole Diameter: 4.5 in.	
Packer No. MP90-182	Depth: 645	Computer Data File: R26-MP90	.WDF
Inf-Tool No. 2321	Vent Tool No. 1576	Volume Pumped:	Vol Returned
H-B Valve: (P_H) 450	Offset (P_V) 0	Confirm Venting (Vent Tool Data) (Y/N)	
Vent Tool Pressure (Shoe Out, P_O) Calc 26psi		Final Inf'n Vol: 26	Final Press: 317 (P_F)
Comments: No Squeeze Relief needed		Calc'd Element Pressure ($P_F + P_V - P_O$) 290	
		Confirm Pkr Valve Closed (Yes/No): Y	

TARGET = 250 + 26 = 276

Pumping Information

Software Reminder
I = Inflate, O = Off, C = Close

Volume (litres)	Pressure			Clock	Comments	
	Line (psig)	Inf. Tool (psia)	Vent Tool (psia)		Tag No.	Text
0	0	11.82	11.42	14:51:44	—	Start laying, shoe out
0	0	14		14:57:06	1	Pump to 600 psi
0.5	600	~~13~~ 14		14:58:30	2	TIE INFLATE - Valve opened
0.5	170	38		15:00:06	3/4	Start pumping
1.0	430	65		15:01:22	5	1L
1.5	470	100		15:02:44	6	1.5L
2.0L	490	131		15:04:04	7	2.0L
2.5	510	133		15:05:30	8	2.5L
3.0	530	168		15:06:54	9	3.0L
3.2	600	325		15:07:15	10	TIE OFF, pump off
3.2	550	319		15:13:00	—	pump to 900 psi
3.2	900	317		15:14:00	11	1 min
3.2	900	317		15:15:00	12	close TIW CLOSE
3.6	0	12		15:16:00	13	Vent Pump
2.6	0	12		15:17:00	14	TIW OFF
2.6	0	21		15:17:00	—	Inflation tool pressure
2.6	0	22		15:20:00	15	5 min - shoe in
2.6	0	12		15:23:00	16	End

PACKER INFLATION RECORD

Client: Kleinfelder Consultants
Site: LANL Groundwater Study
Description: Plastic MP55
Well: R-26
WB Project: WB777
Y Offset Pressure: None
T-Zero = Sat Jul 17 14:33:30 2004

Packer: MP92
Packer Depth:
FILE: R26_MP92
Plot By: DL Date: 01 AUG 2004
Checked By: DGM Date: 05 AUG 2004
Comment:

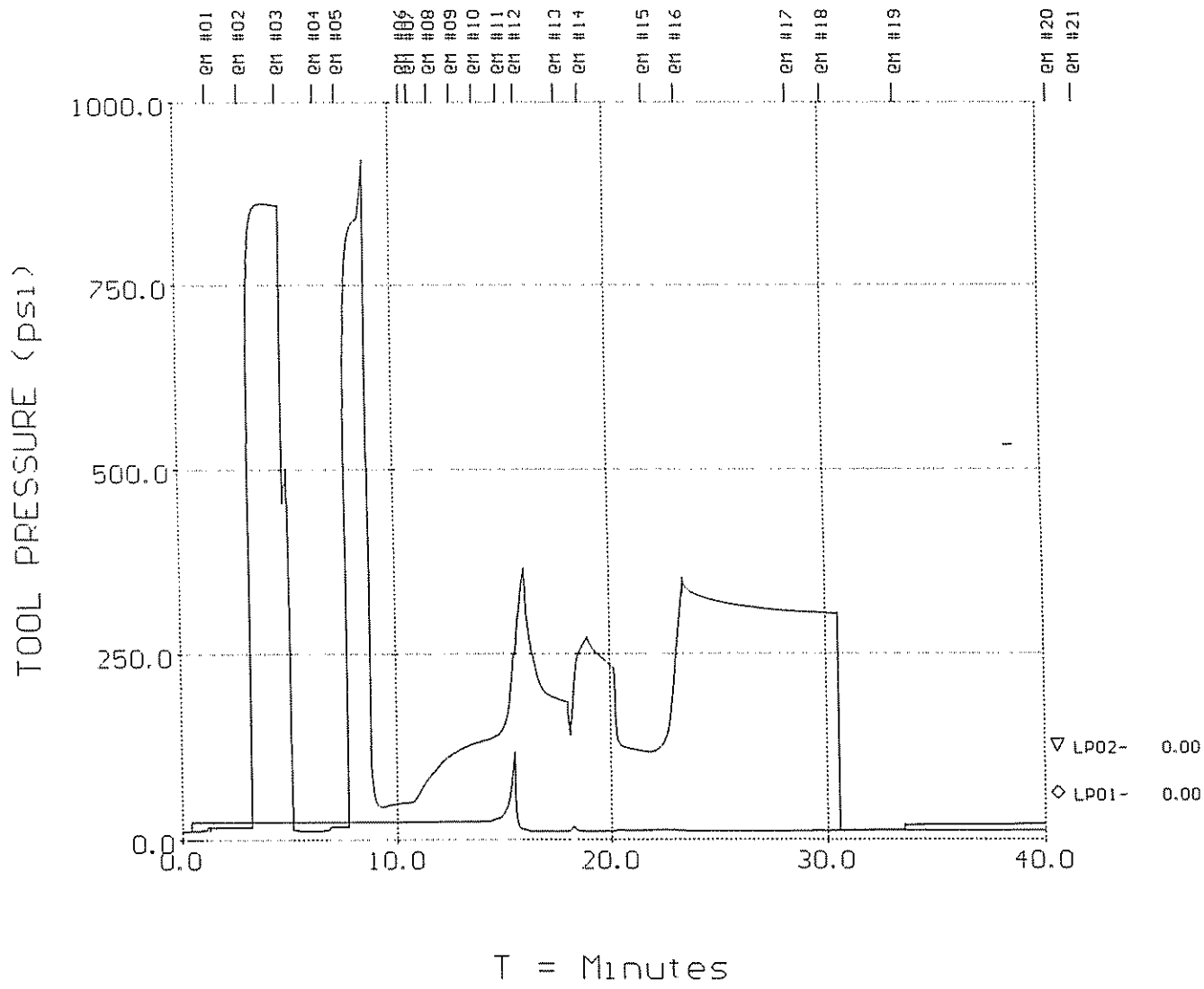

Westbay Instruments Inc.

MP55 Packer Inflation Field Record

Project: 777	Client: KLEIN FELDER	By: DL/ML	Date: 17 July 2004
Location: LANL	Well No. R26	Borehole Diameter: 4.5 inches	
Packer No. MP92-434	Depth: 635	Computer Data File: R26 MP92 .WDF	
Inf-Tool No. 2321	Vent Tool No. 1576	Volume Pumped: ____	Vol Returned ____
H-B Valve: (P_H) 450	Offset (P_V) 0	Confirm Venting (Vent Tool Data) (Y/N) ____	
Vent Tool Pressure (Shoe Out, P_O) 24		Final Inf'n Vol: 3.2	Final Press: 304 (P_F)
Comments:		Calc'd Element Pressure ($P_F + P_V - P_O$) 280	
		Confirm Pkr Valve Closed (Yes/No): 1	

250+24 = 274

Software Reminder

Pumping Information

I = Inflate, O = Off, C = Close

Volume (litres)	Pressure			Clock	Comments	
	Line (psig)	Inf. Tool (psia)	Vent Tool (psia)		Tag No.	Text
0.0	0.0	11.90	11.45	15:33:29	—	Start logging - shoe out
0.0	0.0	16.39	23.89	15:35:[illegible]	1	start pumping 600psi
0.65	600	16.5	24	15:36:30	2	TIE Inflate
0.65	600	860	24	15:38:15	3	TIE OFF, shoe in
0.65	580	12	24	15:40:00	4	shoe out
0.65	580	17	24	15:41:00	5	pump to 600psi TIW INFLATE
0.75	220	46	24	15:42:30	—	pump to 950psi - value opened
0.75	200	49	24	15:44:00	6	START PUMPING
1.0	450	55	24	15:44:52	7	1L
1.5	550	94	24	15:45:19	8	1.5L
2.0	550	118	24	15:46:23	9	2.0L
2.5	550	131	24	15:47:26	10	2.5L
3.0	550	153	208	15:48:33	11	3.0L sampler valve open
3.35	580	357	11	15:49:23	12	TIE OFF - PUMP OFF
3.35	570	186	11	15:51:15	13	TIE INFLATE
3.35	400	267	11	15:52:23	14	TIE OFF
3.35	400	117	11	15:55:20	15	TIE INFLATE, PUMP ON
3.8	600	325	11	15:56:45	16	TIE OFF, PUMP OFF
3.8	590	307	11	16:02:00	17	Pump to 900
4.2	900	304	11	16:03:33	18	1min - close TIW
4.2	900	12	11	16:04:33	—	1min - Inflation tool pressure
3.2	0	12	11	16:07:00	19	TIW OFF
3.2	0	19	11	16:11:41	—	
3.2	0	20	12	16:14:00	20	OK - Shoes in
3.2	0	12	12	16:15	21	END

PACKER INFLATION RECORD

Client: Kleinfelder Consultants
Site: LANL Groundwater Study
Description: Plastic MP55
Well: R-26
WB Project: WB777
Y Offset Pressure: None
T-Zero = Sat Jul 17 15:56:35 2004

Packer: MP127
Packer Depth:
FILE: R26MP127
Plot By: DL Date: 01 AUG 2004
Checked By: DGM Date: 05 AUG 2004
Comment:

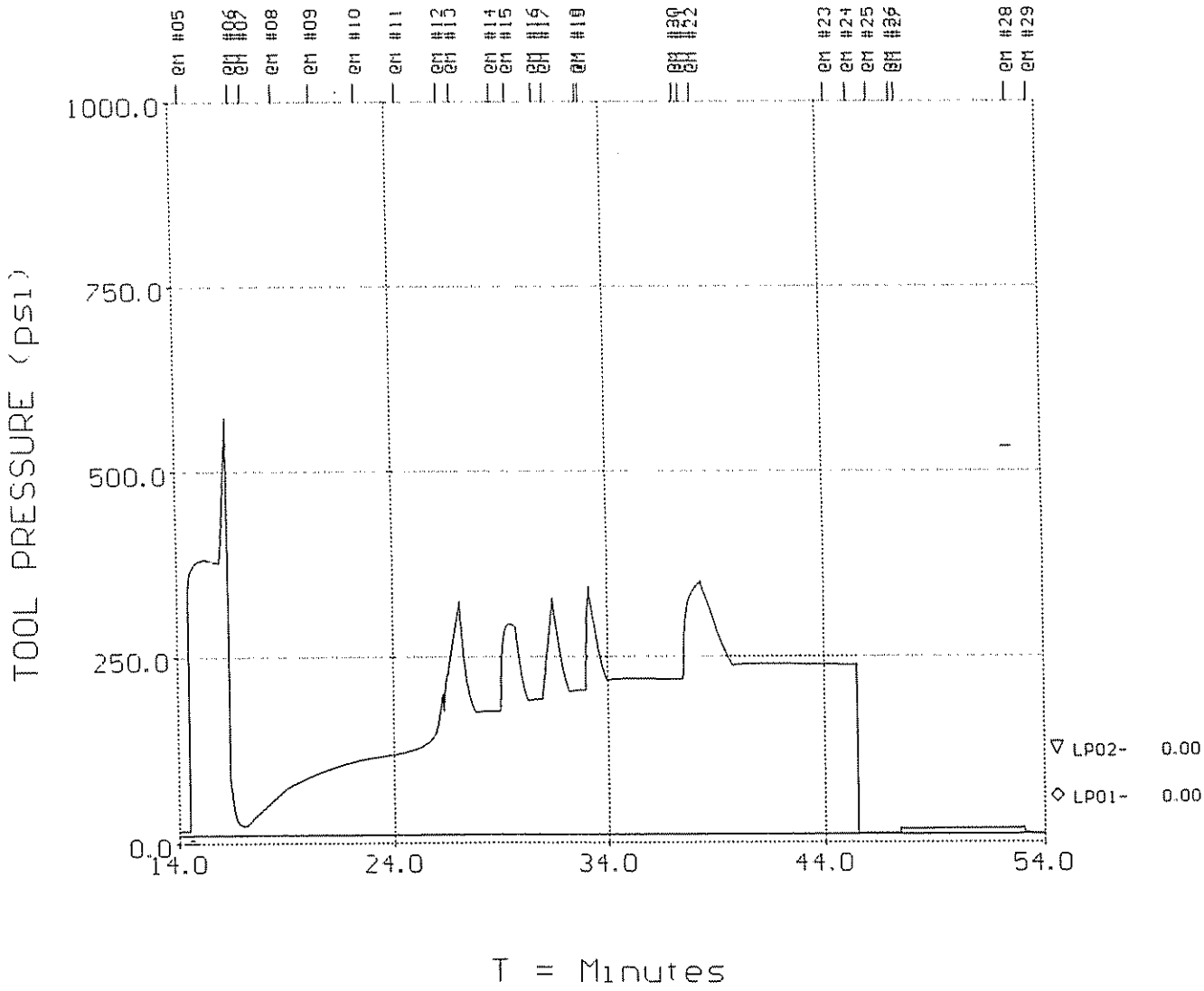

Westbay Instruments Inc.

MP55 Packer Inflation Field Record

Project: 777	Client: KLEINFELDER	By: DC/ML	Date: 17 July 2004
Location: CANL	Well No. R26	Borehole Diameter: 4.5 inch	
Packer No. MP127-441	Depth: 295	Computer Data File: R26	.WDF
Inf-Tool No. 2321	Vent Tool No. 1576	Volume Pumped:	Vol Returned
H-B Valve: (P_H) 450	Offset (P_V) 0	Confirm Venting (Vent Tool Data) (Y/N)	
Vent Tool Pressure (Shoe Out, P_O) 11.5		Final Inf'n Vol: 3.0	Final Press: 238 (P_F)
Comments:		Calc'd Element Pressure ($P_F + P_V - P_O$) 227	
		Confirm Pkr Valve Closed (Yes/No): Y	

250 + 11 = 261 psi

Software Reminder

I = Inflate, O = Off, C = Close

Pumping Information

Volume (litres)	Pressure			Clock	Comments	
	Line (psig)	Inf. Tool (psia)	Vent Tool (psia)		Tag No.	Text
0	0	11.69	11.48	16:42:30	–	Start logging, shoe out
0	5	11.86	11.29	16:43:30	1	Pump to 600 psi
0.7	600	12	11	16:45:30	2	TIE INFLATE
0.7	380	13	11	16:46:00	3	Start pumping refill reservoir vent pump
1.0	350	12	11	16:52:30	–	Relanded, Sampler arm in
0	0	12	11	16:53:30	~~4~~	~~shoe out, Pump to 600 psi~~
0	0	18	11	16:55:00	4	Pump to 600 psi
0.65	600	17	11	16:57:00	5	TIE INFLATE pumped to 572
0.8	500	28	11	16:59:20	6	Start inflating
1.0	550	30	11	16:59:54	7	1L
1.5	560	67	11	17:01:19	8	1.5L
2.0	560	94	11	17:03:05	9	2L
2.5	600	112	11	17:05:10	10	2.5L
3.0	600	121	11	17:07:02	11	3L
3.5	650	199	11	17:09:00	12	3.5L
3.7	700	318	11	17:09:38	13	stop pumping, TIE OFF
3.7	700	176	11	17:11:30	14	TIE Inflate
3.7	600	290	11	17:12:13	15	TIE OFF
3.7	600	192	11	17:13:30	16	TIE INFLATE, pump on
3.8	750	360	11	17:13:59	17	TIE OFF
3.8	750	204	11	17:15:30	18	TIE INFLATE
3.8	750	322	11	17:15:48	19	TIE OFF
3.8	750	219	11	17:20:00	20	TIE INFLATE
3.8	650	348	11	17:20:50	22	TIE OFF

Westbay Instruments Inc.

MP55 Packer Inflation Field Record Part 2

Project:_____ Well No._____ Packer No. MP127-441 Date:_____

Software Reminder

Pumping Information I = Inflate, O = Off, C = Close

Volume (litres)	Pressure			Clock	Comments	
	Line (psig)	Inf. Tool (psia)	Vent Tool (psia)		Tag No.	Text
3.8	650	239	"	17:26:00	—	Pump to 900 psi
4.05	900	238	"	17:27:00	23	1 min
4.05	900	238	"	17:28:00	24	TIW CLOSE
4.05	890	12	"	17:29:00	25	VENT PUMP
3.08	0	13	"	17:30:00	26	TIW OFF
3.08	0	18	"	17:30:15	27	INFLATION TOOL PRESSURE
3.0	0	19	"	17:35:15	28	After 5 min., shoe in
3.0	0	12	"	17:37:15	29	OK - END

Pre-Inflation Profile
Monitoring Well: R26

Figure: 1
Profile Date:July 16, 2004
Comments: All Zones

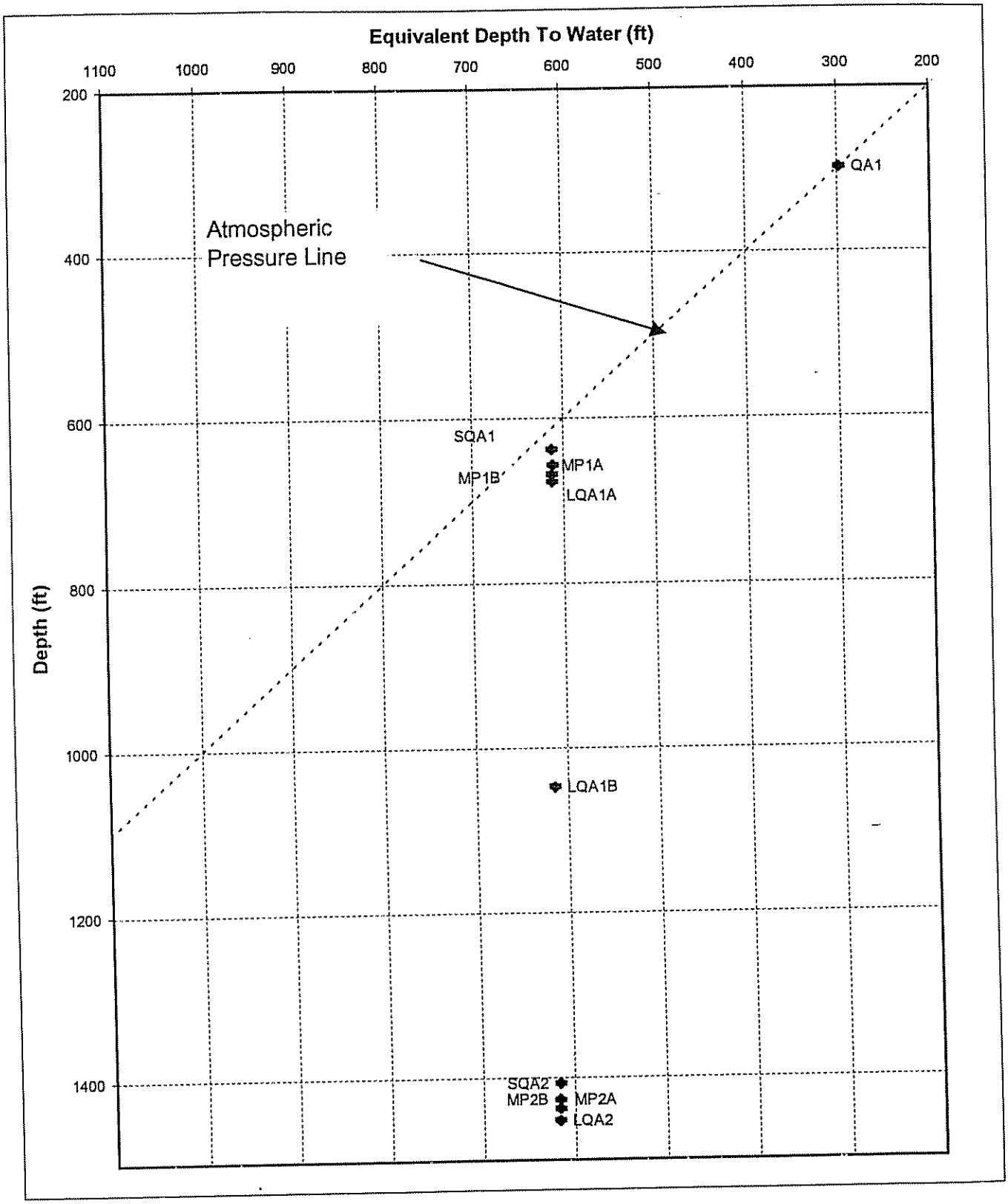

Plot By: DC Date: 01 AUG 2004
Checked By: DGM Date: 05 AUG
Westbay Project : WB777
File: R26_PRE) Chart 1

Client: Kleinfelder
Site: Los Alamos
Datum: ground surface

Westbay

Piezometric Pressures/Levels
Field Data and Calculation Sheet

Datum: Ground Level | Pressure Probe Type: EMS | Client: KLEINFELDER | Date: 16 July 2009

Elev. Ground Sfc: _____ | Serial No.: 1576 | Job No.: WB777 | Drillhole No.: R26

Height MP Casing above Ground Sfc: _____ | Range: 0 to 1000 (psia) kg/cm² mH_2O | Location: LANL

Elev. top of MP Casing: _____ | Weather: clear, warm | Casing Size/Type: Plastic MP55

Reference Elev. Steel Casing: _____ | Barometric Pressure: _____ | Operator: DL/ML

Ambient Reading (Pressure/Temperature/Time): Start 11.13/29.99°C/1054hr Finish 11.13/17.3°C/1211 hr

Zone No.	Port Depth (ft.) m.	Fluid Pressure Readings (psia) kg/cm² mH_2O Inside Casing P(i)	Outside Casing P(o)	Inside Casing P(i)	Trans. Temp. °K (°C)	Time, H:M:S	Depth to Water in MP ft. m. Dmp	ΔH (ft. m.) = P(o) - P(i) / w	Piez. Level Outside Port, (ft.) m. Dz = Dmp - ΔH	Comments
LQA2	1452.9	179.03	373.81			1112				
			373.84	179.4	25.56	1115	—		616.2	
MP2B	1438.0	172.63	367.46			1118				
			367.46	172.66	25.92	1119			616.0	
MP2A	1422.0	167.92	362.75			1121				
			362.75	167.95	25.88	1122			615.9	
SQA2	~~1047.2~~ 1407.2	159.41	354.26			1128				
			354.26	159.44	25.68	1129			615.5	
LQA1B	1047.9	11.69	199.07			1137				
			199.08	11.69	21.09	1138			614.3	
LQA1A	677.2	11.49	39.28			11.44				
			39.28	11.50	20.00	11.46			612.3	
MP1B	668.9	11.51	35.66			1148				
			35.67	11.50	19.47	1149			612.3	
MP1A	657.1	11.51	30.86			1151				
			30.90	11.47	18.91	1153			611.5	
SQA1	638.1	11.44	22.29			1156				
			22.28	11.44	18.39	1158			612.3	
~~4~~ QA1	298.3	11.27	11.26			1205				
			11.26	11.26	17.31	1206			ATMOS	
				— END —						

Post-Inflation Profile
Monitoring Well: R26

Figure: 2
Profile Date: July 18, 2004
Comments: All Zones

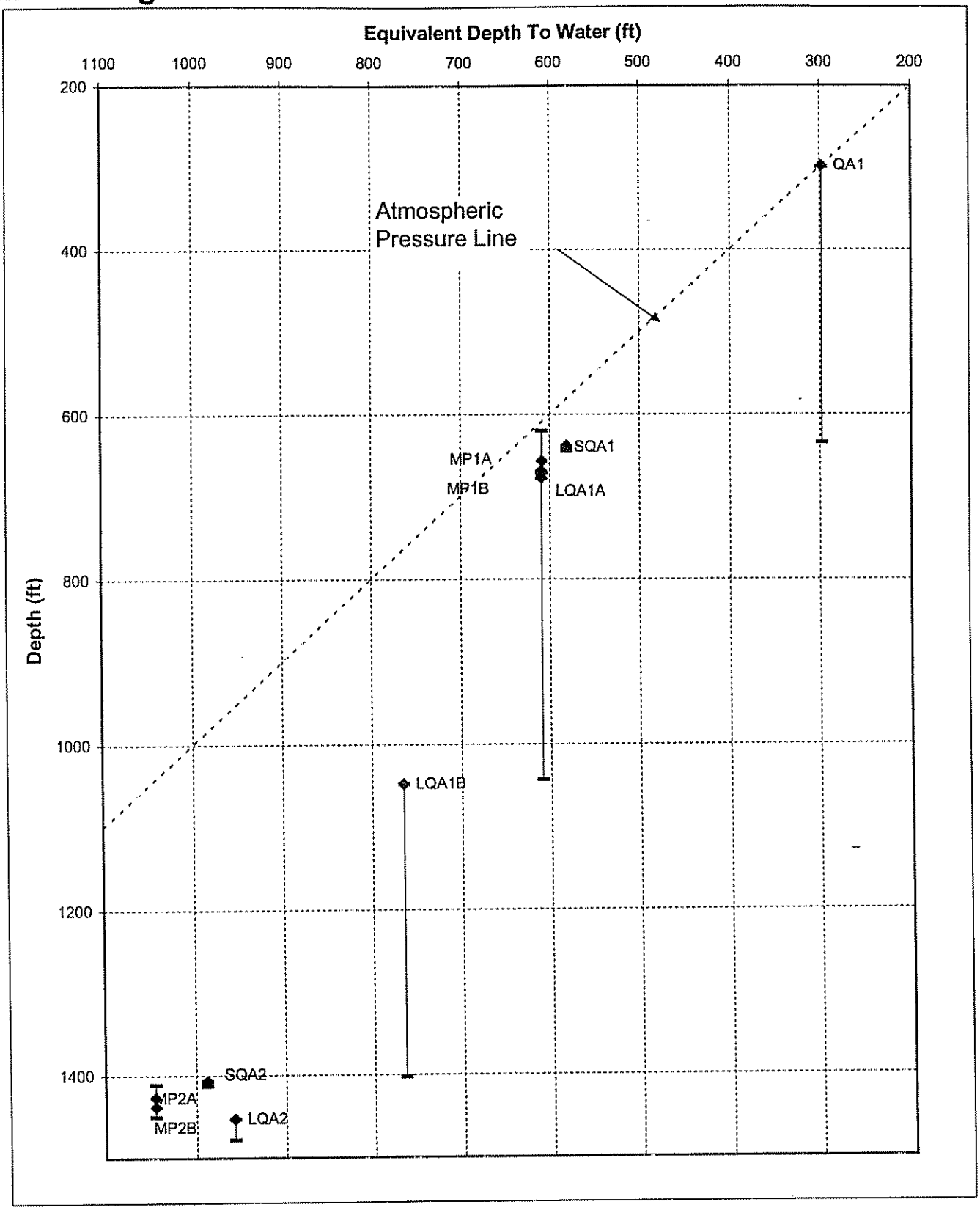

Client: Kleinfelder
Site: Los Alamos
Datum: ground surface

Plot By: DL Date: 01 Aug 2004
Checked By: DGM Date: 05 AUG
Westbay Project : WB777
File: July 18 2004 Chart 1

Westbay

Piezometric Pressures/Levels
Field Data and Calculation Sheet

Datum: GROUND LEVEL Pressure Probe Type: LEMS Client: KLEINFELDER Date: 18 July 2004

Elev Ground Sfc: _____ Serial No.: 1576 Job No.: WB777 Drillhole No.: R26

Height MP Casing above Ground Sfc: _____ Range: 0 to 1000 (psia) kg/cm² mH_2O Location: LANL

Elev. top of MP Casing: _____ Weather: clear, warm Casing Size/Type: Plastic MP55

Reference Elev. Steel Casing: _____ Barometric Pressure: _____ Operator: ML

Ambient Reading (Pressure/Temperature/Time): Start 11.18psia/20.12°C/0806 Finish 11.19psia/~~15.0~~°C/1002hr

Zone No.	Port Depth (ft.) m.	Fluid Pressure Readings (psia) kg/cm² mH_2O Inside Casing P(i)	Outside Casing P(o)	Inside Casing P(i)	Trans. Temp. °K (°C)	Time, H:M:S	Depth to Water in MP (ft.) m. Dmp	ΔH (ft. m.) = P(o) - P(i) / w	Piez. Level Outside Port, ft. m. Dz = Dmp - ΔH	Comments
LQA2	1452.9	228.93	226.16			0825				
			226.15	228.96	25.11	0826			957.0	
MP2B	1438.0	222.63	182.28		25.97	0832				
			182.01		26.04	0835				
			181.88		26.07	0837				
			181.82		26.08	0838				
			181.67	222.68	26.13	0842			1044.7	
MP2A	1427.0	217.92	177.93		26.10	0844				
			177.48		26.07	0846				
			177.12		26.08	0848				
			176.94		26.07	0850				
			176.88		26.07	0852				
			176.76	217.92	26.06	0854			1046.0	
SQA2	1407.2	209.37	194.02		25.95	0856				
			193.36		25.88	0859				
			193.27		26.87	0900				
			193.24		26.84	0901				
			193.18		26.84	0903				
			193.06	209.35	26.82	0906			487.6	

09/11/90 - MR

* see Operations Manual for explanation of calculation method

Westbay

Piezometric Pressures/Levels

Field Data and Calculation Sheet

Datum: _____ Pressure Probe Type: _____ Client: KLEINFELDER Date: 18 July 2004

Elev Ground Sfc: _____ Serial No.: _____ Job No.: WB777 Drillhole No.: R26

Height MP Casing above Ground Sfc: _____ Range: 0 to _____ psia kg/cm² mH_2O Location: LANL

Elev. top of MP Casing: _____ Weather: _____ Casing Size/Type: _____

Reference Elev. Steel Casing: _____ Barometric Pressure: _____ Operator: _____

Ambient Reading (Pressure/Temperature/Time): Start _____ Finish _____

Zone No.	Port Depth (ft) m.	Fluid Pressure Readings psia kg/cm² mH_2O Inside Casing P(i)	Outside Casing P(o)	Inside Casing P(i)	Trans. Temp. °K °C	Time, H:M:S	Depth to Water in MP (ft) m. Dmp	ΔH (ft. m.) = P(o) - P(i) / w	Piez. Level Outside Port, (ft) m. Dz = Dmp - ΔH	Comments
LQAI B	1047.8	53.85	133.91		22.19	0914				
			133.88		21.91	0915				
			133.85		21.69	0916				
			133.85	53.85	21.55	0917			764.8	
~~MP1B~~	~~678.6~~	~~11.46~~	~~37.24~~							
LQAIA	678.6	11.54	40.58		18.93	0926			610.8	
			40.56	11.52	18.83	0929				
MP1B	620.3	11.46	37.24		18.59	0932				
			36.92		18.38	0933				
			36.92		18.16	0935				
			36.92	11.47	18.05	0936			610.8	
MP1A	593	11.45	32.17		17.80	0939				
			32.13		17.67	0940				
			32.13	11.45	17.58	0941			610.8	
SQA1	639.4	11.44	35.83		17.40	0943				
			35.82	11.44	17.32	0945			582.6	
QA1	299.9	11.30	11.33		16.45	0953				
			11.28		16.28	0954				
			11.29		16.09	0955				
			11.29	11.29	15.94	0956			299.9	DRY

09/11/90 - MR

* see Operations Manual for explanation of calculation method

Summary Casing Log

Company: Kleinfelder Consultants
Well: R26
Site: LANL
Project: Hydrogeology Study

Job No: WB777
Author: DL

Well Information

Reference Datum: Ground Level
Elevation of Datum: 0.00 ft.
MP Casing Top: 0.00 ft.
MP Casing Length: 1468.86 ft.
Depth Adjusted For:
Field De-Stressing
Well Description:
PlasticMP55
Other References:
Pipe-based wire-wrapped screens.
BF and screens: KC As-Built 12-2003
All depths nominal (cold meas'd lengths)

Borehole Depth: 1490.50 ft.
Borehole Inclination: vertical
Borehole Info: (# - start - end - diameter)

File Information

File Name: R26FINAL.WWD
Report Date: Wed Jul 21 20:02:57 2004

File Date: Jul 18 07:41:09 2004

Sketch of Wellhead Completion

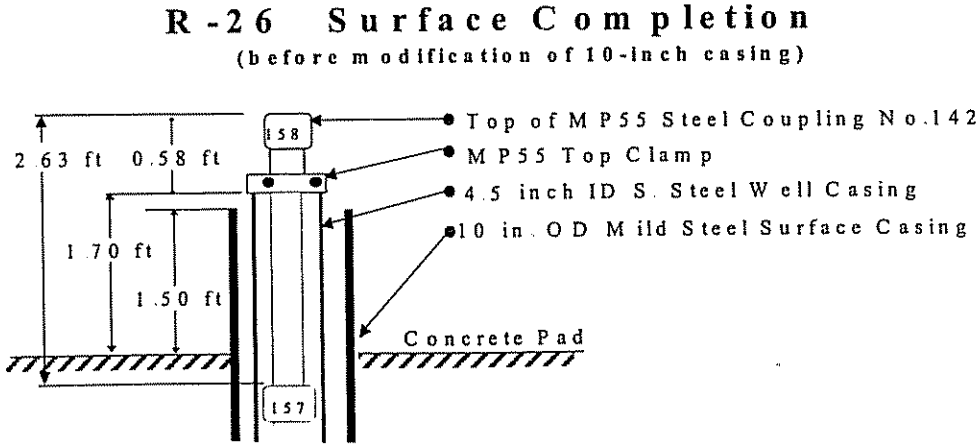

Summary Casing Log
Kleinfelder Consultants

Job No: WB777
Well: R26

Legend

(Qty) MP Components

(Library - WD Library 7/27/00)

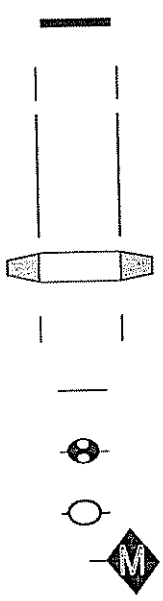

(2) 0603 - MP55 End Plug

(8) 0601M15 - MP55 Casing, 1.5 m, PVC

(141) 0601M30 - MP55 Casing, 3.0 m, PVC

(8) 0612 - MP55 Packer, Stiffened, SS

(1) 0601M10 - MP55 Casing, 1.0 m, PVC

(148) 0602 - MP55 Regular Coupling

(10) 0605 - MP55 Measurement Port

(2) 0607 - MP55 Hydraulic Pumping Port

(5) 0608 - MP55 Magnetic Location Collar

Geology

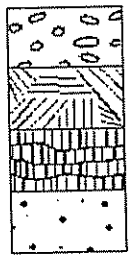

Conglomerate

Rock

Lava, Basaltic

Sandstone, Coarse

Backfill/Casing

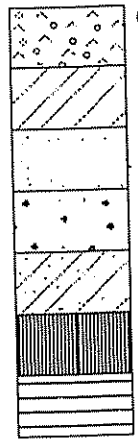

Concrete

Bentonite

Sand Fine

Sand Coarse

Bentonite, Sand

Stainless Steel

Well Screen

(c) Westbay Instruments Inc. 2000Wed Jul 21 19:46:36 2004

Summary Casing Log
Kleinfelder Consultants

Job No: WB777
Well: R26

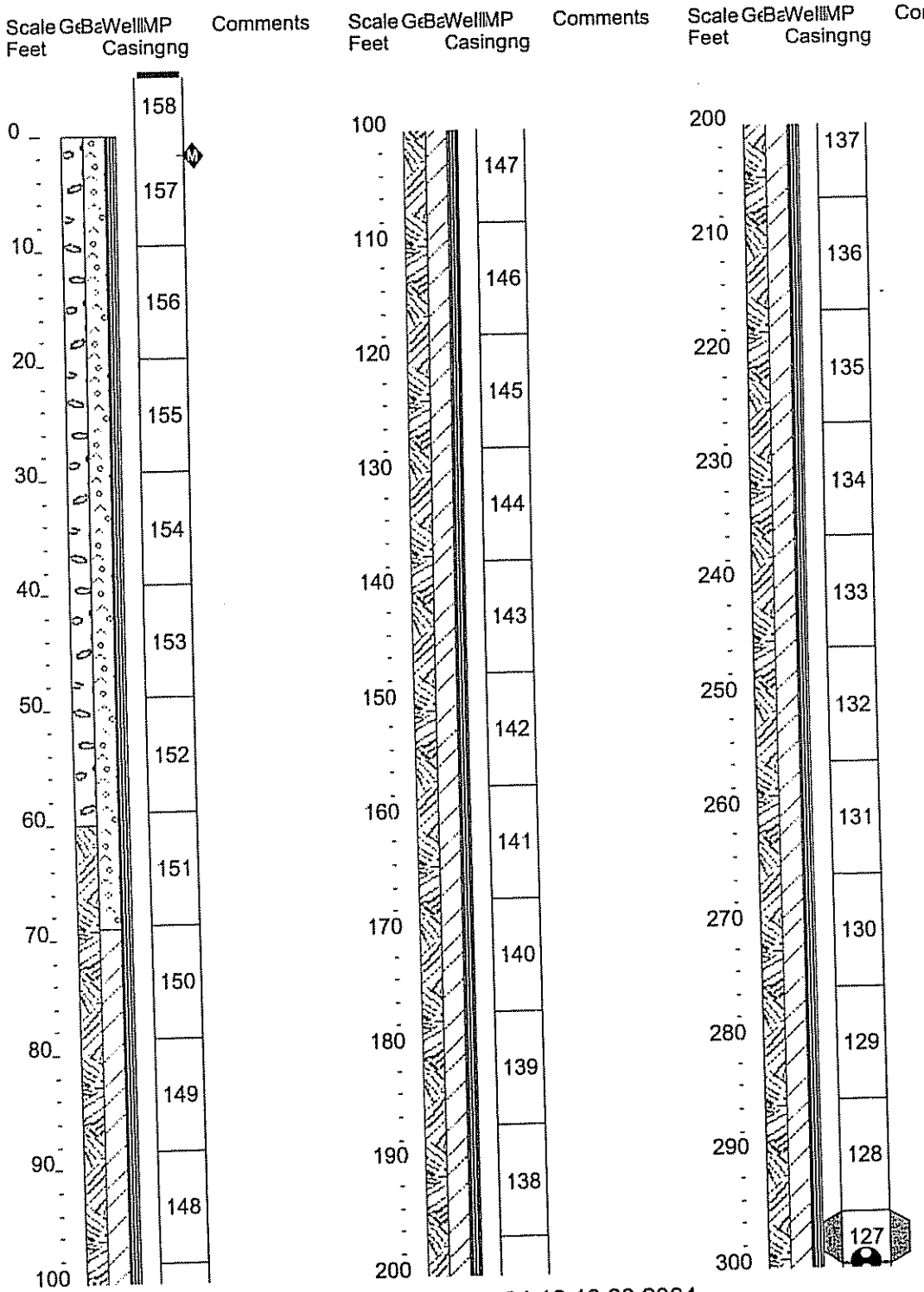

(c) Westbay Instruments Inc. 2000
ed Aug 04 12:10:20 2004

Summary Casing Log
Kleinfelder Consultants

Job No: WB777
Well: R26

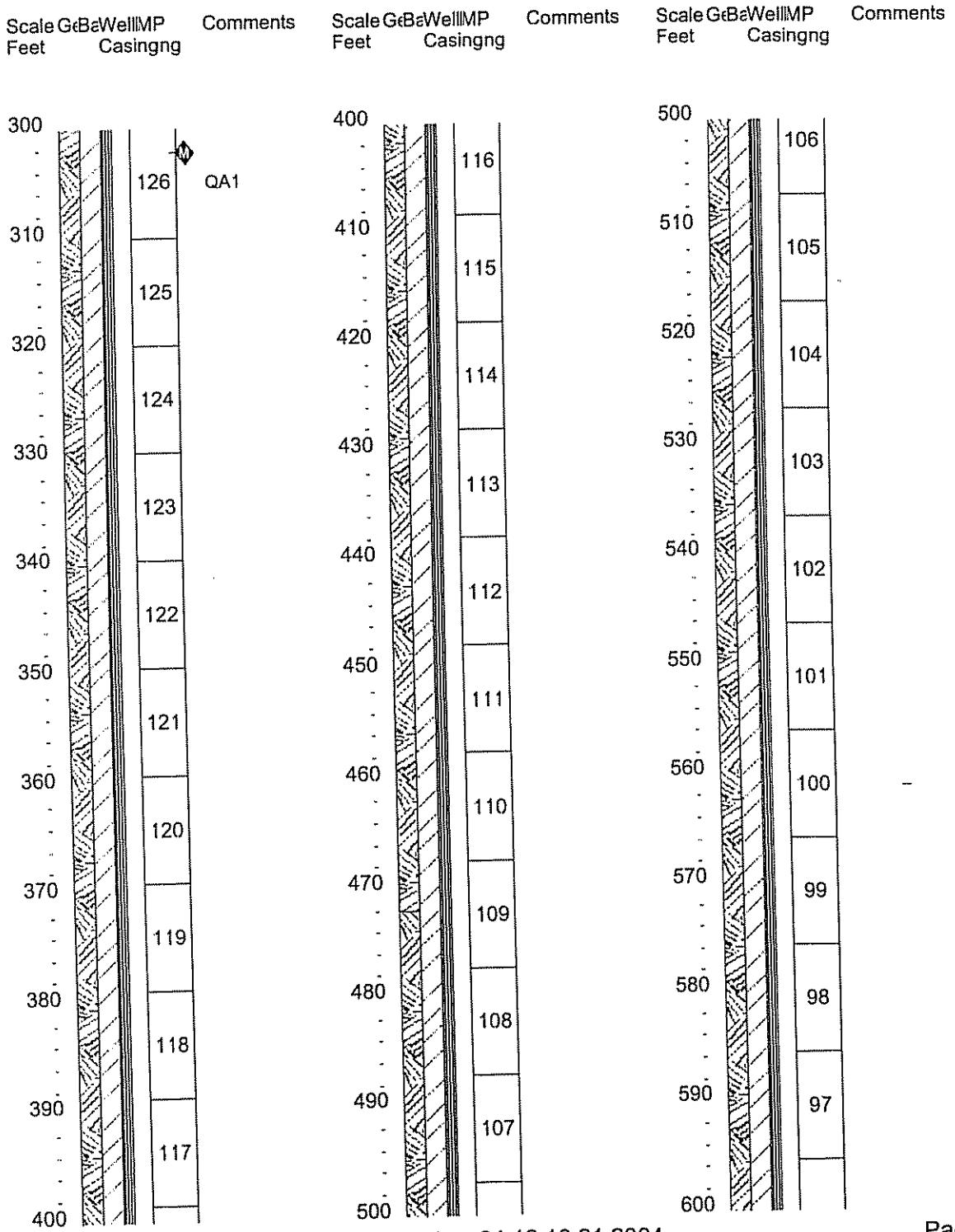

(c) Westbay Instruments Inc. 2000ed Aug 04 12:10:21 2004

Summary Casing Log
Kleinfelder Consultants

Job No: WB777
Well: R26

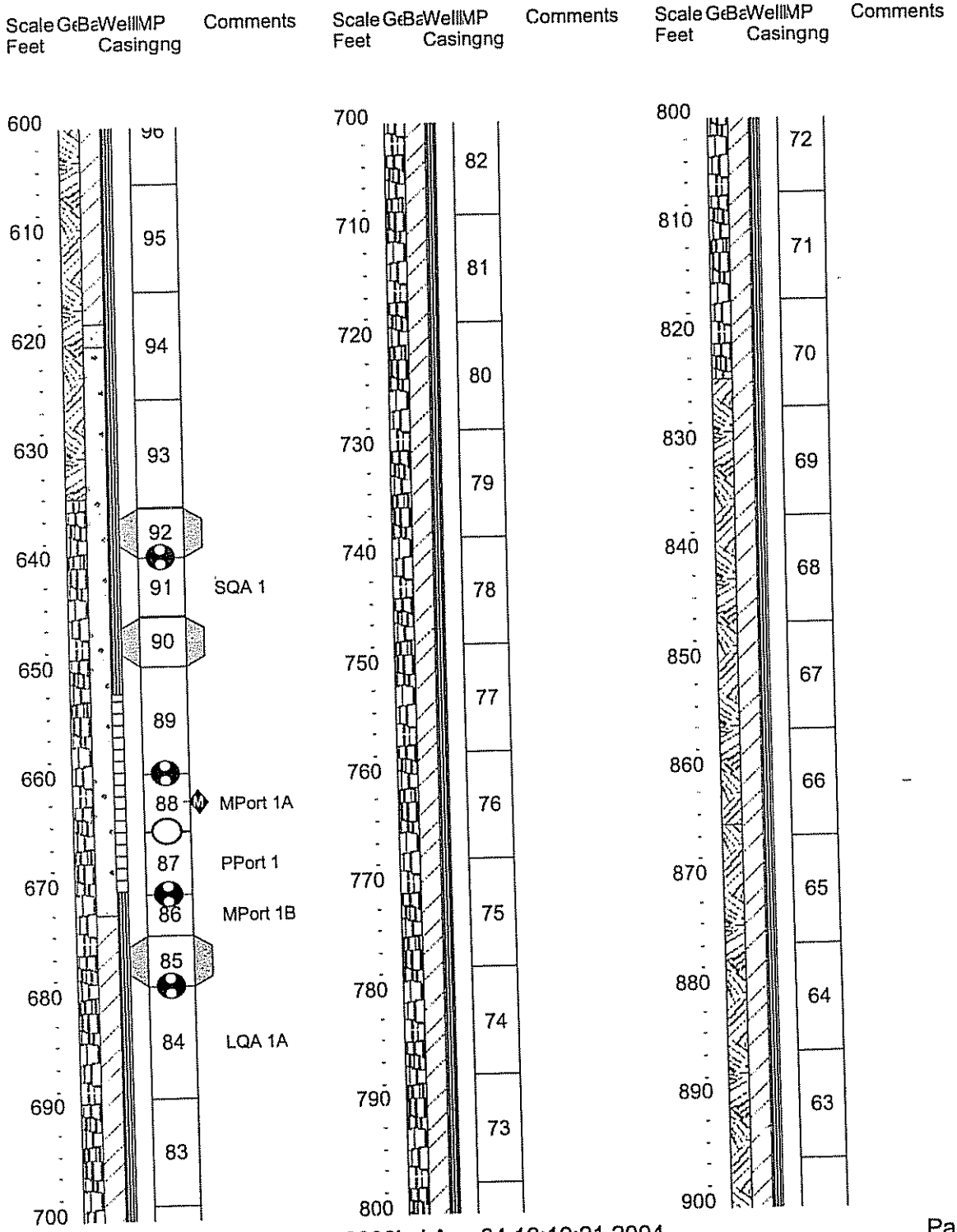

(c) Westbay Instruments Inc. 2000ed Aug 04 12:10:21 2004

Summary Casing Log
Kleinfelder Consultants

Job No: WB777
Well: R26

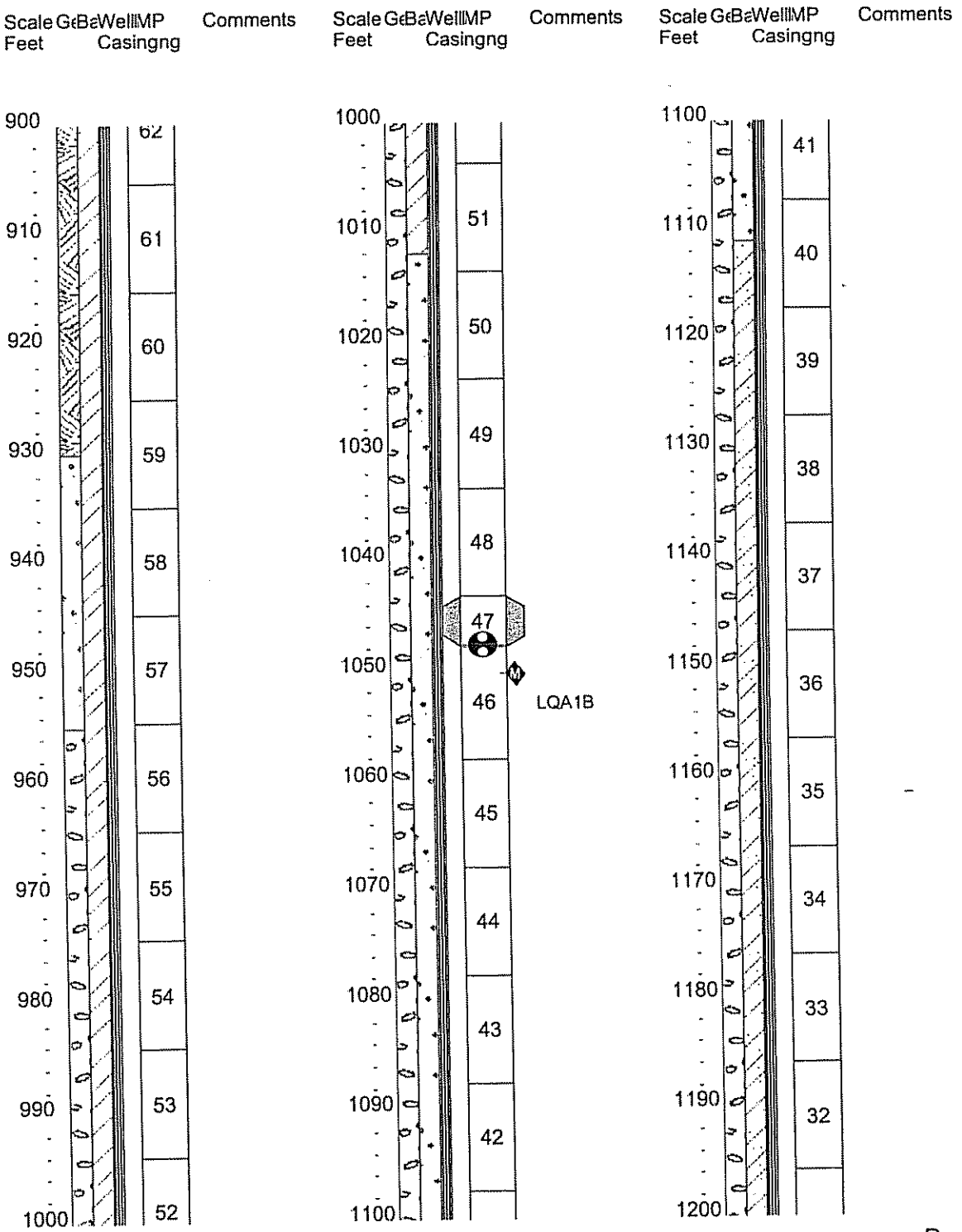

(c) Westbay Instruments Inc. 2000ed Aug 04 12:10:22 2004

Summary Casing Log
Kleinfelder Consultants

Job No: WB777
Well: R26

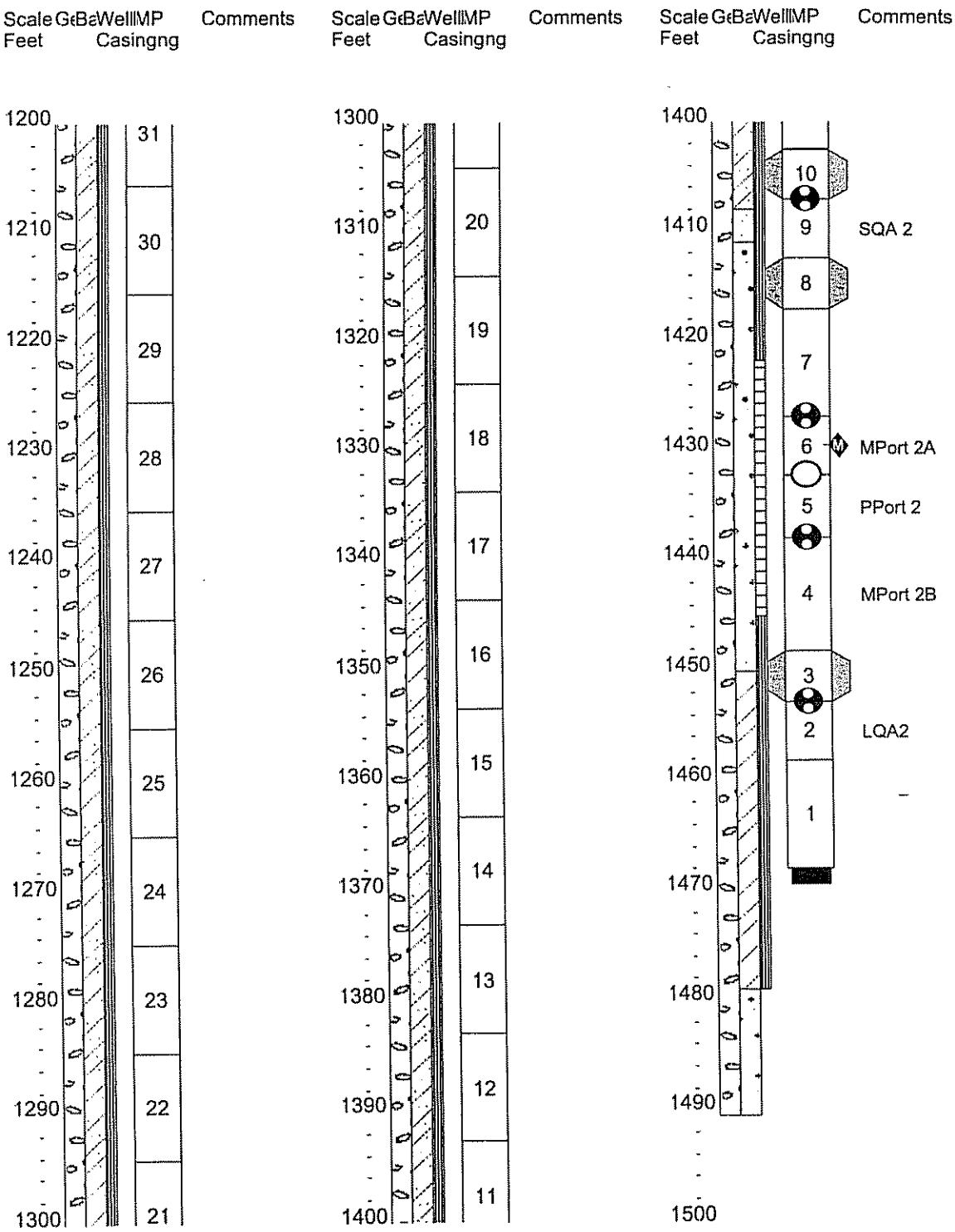

(c) Westbay Instruments Inc. 2000ed Aug 04 12:16:10 2004

Appendix G

NMED Discharge Approval and
Discharge Media Analytical Results

------- Forwarded message follows -------
From: "Enz, Robert D." <renz@doeal.gov>
To: "'meverett@kleinfelder.com'" <meverett@kleinfelder.com>,
"'bbockisch@kleinfelder.com'" <bbockisch@kleinfelder.com>
Date sent: Thu, 12 Feb 2004 14:11:34 -0700
Subject: FW: Land Application of Drilling and
Development Water From R-26

-----Original Message-----
From: Curt Frischkorn [mailto:curt_frischkorn@nmenv.state.nm.us]
Sent: Wednesday, January 14, 2004 4:38 PM
To: Enz, Robert D.; John_Young@nmenv.state.nm.us
Cc: mjohanson@doeal.gov; Whitacre, Thomas; spearson@lanl.gov; bbeers@lanl.gov
Subject: RE: Land Application of Drilling and Development Water From R-26

Bob:

This email confirms NMED approval for the discharge of drilling and development water from regional well R-26 (described below). The drilling and development water must be discharged as described in the Hydrogeologic Workplan NOI dated July 16, 2002. If you have any questions, please contact me at 505-827-0078.

Curt Frischkorn
NMED Ground Water Pollution Prevention Section

-----Original Message-----
From: Enz, Robert D. [mailto:renz@doeal.gov]
Sent: Friday, December 12, 2003 4:35 PM
To: 'curt_frischkorn@nmenv.state.nm.us';
'John_Young@nmenv.state.nm.us'
Cc: 'mjohanson@doeal.gov'; Whitacre, Thomas;
'spearson@lanl.gov'; 'bbeers@lanl.gov'
Subject: Land Application of Drilling and Development Water From R-26

Dear Curt and John,

I am transmitting the analytical screening data from the sampling of Workplan Well R-26 drilling and development water. Workplan Well R-26 is located at the top of Canyon de Valle in the NW corner of TA-16. Approximately 100,000 gallons of drilling and development water was recently produced during the construction of R-26. The details are as follows.

Pit Water

Approximately 130,000 gallons of drilling and development water are being stored in a lined pit and frac tank at the R-26 drill site. Screening analysis of the pit water produced the following results:

1) No PCBs were detected at concentrations greater than Method Detection Limits.
2) No VOAs were detected with the exception of acetone at 2100 ppb and toluene at 13 ppb. It is believed that the acetone detected in the pit water is an artifact of the drilling additive, Quickfoam, that contains isopropyl alcohol.
3) No SVOAs were detected in the sample.
4) Gross alpha activity is 10.7 pCi/L (+/-1.0 pCi/L), below the EPA drinking water MCL of 15 pCi/L.
5) Tritium results were non detect (RL=1200 pCi/L).
6) No perchlorate was detected in the sample (MRL=4.0 ppb). Note: Result was reported as <400 ppb due a 100X dilution performed on the sample.
7) Screening results show that no contaminants exceeded NM WQCC Regulation 3103 ground water standards with the exception of the following:

* Al=7.23 ppm (ground water std=5.0 ppm)
* Fe=1.08 ppm (ground water std=1.0 ppm)

R-26 is located on the west side of TA-16 near Canon de Valle. It is located upgradient of any PRSs or historic TA-16 outfalls. It will serve as a background well for the southwestern portion of LANL.

DOE proposes to land apply the R-26 drilling and development water, using a water truck, to the dirt sides of the paved road leading from the old fire house at TA-16 to the R-26 location, as well as in the borrow pit located north of R-26 and Canon De Valle. The application will be conducted in accordance with the terms and conditions of the Hydrogeologic Workplan NOI.

Please contact me at 667-7640 or Bob Beers at 667-7969 (office) or 699-2342 (cell) should you have any questions regarding this notification. This notification will be formally transmitted to you via a letter signed by Mat Johansen, DOE Ground Water Compliance Manager.

Bob Enz
------- End of forwarded message -------
KLEINFELDER
EXPECT MORE

Warning: Information provided via electronic media is not guaranteed against defects including translation and transmission errors.

If the reader is not the intended recipient, you are hereby notified that any dissemination, distribution or copying of this communication is strictly prohibited. If you have received this information in error, please notify the sender immediately.

Hall Environmental Analysis Laboratory

Date: *12-Dec-03*

CLIENT: Kleinfelder
Client Sample ID: R-26 cuttings
Lab Order: 0311068
Collection Date: 11/10/2003 12:50:00 PM
Project: R-26
Lab ID: 0311068-03
Matrix: SOIL

Analyses	Result	Limit	Qual	Units	DF	Date Analyzed
EPA METHOD 8082: PCB'S						Analyst: **JMP**
Aroclor 1016	ND	0.050		mg/Kg	1	12/4/2003 5:05:43 PM
Aroclor 1221	ND	0.25		mg/Kg	1	12/4/2003 5:05:43 PM
Aroclor 1232	ND	0.050		mg/Kg	1	12/4/2003 5:05:43 PM
Aroclor 1242	ND	0.050		mg/Kg	1	12/4/2003 5:05:43 PM
Aroclor 1248	ND	0.050		mg/Kg	1	12/4/2003 5:05:43 PM
Aroclor 1254	ND	0.050		mg/Kg	1	12/4/2003 5:05:43 PM
Aroclor 1260	ND	0.050		mg/Kg	1	12/4/2003 5:05:43 PM
Surr: Decachlorobiphenyl	87.4	50.1-115		%REC	1	12/4/2003 5:05:43 PM
EPA METHOD 8260B: VOLATILES						Analyst: **BL**
Benzene	ND	0.050		mg/Kg	1	11/13/2003
Toluene	ND	0.050		mg/Kg	1	11/13/2003
Ethylbenzene	ND	0.050		mg/Kg	1	11/13/2003
Methyl tert-butyl ether (MTBE)	ND	0.050		mg/Kg	1	11/13/2003
1,2,4-Trimethylbenzene	ND	0.050		mg/Kg	1	11/13/2003
1,3,5-Trimethylbenzene	ND	0.050		mg/Kg	1	11/13/2003
1,2-Dichloroethane (EDC)	ND	0.050		mg/Kg	1	11/13/2003
1,2-Dibromoethane (EDB)	ND	0.050		mg/Kg	1	11/13/2003
Naphthalene	ND	0.10		mg/Kg	1	11/13/2003
1-Methylnaphthalene	ND	0.20		mg/Kg	1	11/13/2003
2-Methylnaphthalene	ND	0.20		mg/Kg	1	11/13/2003
Acetone	ND	0.50		mg/Kg	1	11/13/2003
Bromobenzene	ND	0.050		mg/Kg	1	11/13/2003
Bromochloromethane	ND	0.050		mg/Kg	1	11/13/2003
Bromodichloromethane	ND	0.050		mg/Kg	1	11/13/2003
Bromoform	ND	0.050		mg/Kg	1	11/13/2003
Bromomethane	ND	0.10		mg/Kg	1	11/13/2003
2-Butanone	ND	0.50		mg/Kg	1	11/13/2003
Carbon disulfide	ND	0.50		mg/Kg	1	11/13/2003
Carbon tetrachloride	ND	0.050		mg/Kg	1	11/13/2003
Chlorobenzene	ND	0.050		mg/Kg	1	11/13/2003
Chloroethane	ND	0.10		mg/Kg	1	11/13/2003
Chloroform	ND	0.050		mg/Kg	1	11/13/2003
Chloromethane	ND	0.050		mg/Kg	1	11/13/2003
2-Chlorotoluene	ND	0.050		mg/Kg	1	11/13/2003
4-Chlorotoluene	ND	0.050		mg/Kg	1	11/13/2003
cis-1,2-DCE	ND	0.050		mg/Kg	1	11/13/2003
cis-1,3-Dichloropropene	ND	0.050		mg/Kg	1	11/13/2003
1,2-Dibromo-3-chloropropane	ND	0.10		mg/Kg	1	11/13/2003
Dibromochloromethane	ND	0.050		mg/Kg	1	11/13/2003
Dibromomethane	ND	0.10		mg/Kg	1	11/13/2003

Qualifiers:
ND - Not Detected at the Reporting Limit
J - Analyte detected below quantitation limit
B - Analyte detected in the associated Method Blank
* - Value exceeds Maximum Contaminant Level
S - Spike Recovery outside accepted recovery limits
R - RPD outside accepted recovery limits
E - Value above quantitation range

Hall Environmental Analysis Laboratory

Date: *12-Dec-03*

CLIENT: Kleinfelder
Client Sample ID: R-26 cuttings
Lab Order: 0311068
Collection Date: 11/10/2003 12:50:00 PM
Project: R-26
Lab ID: 0311068-03
Matrix: SOIL

Analyses	Result	Limit	Qual	Units	DF	Date Analyzed
1,2-Dichlorobenzene	ND	0.050		mg/Kg	1	11/13/2003
1,3-Dichlorobenzene	ND	0.050		mg/Kg	1	11/13/2003
1,4-Dichlorobenzene	ND	0.050		mg/Kg	1	11/13/2003
Dichlorodifluoromethane	ND	0.050		mg/Kg	1	11/13/2003
1,1-Dichloroethane	ND	0.050		mg/Kg	1	11/13/2003
1,1-Dichloroethene	ND	0.050		mg/Kg	1	11/13/2003
1,2-Dichloropropane	ND	0.050		mg/Kg	1	11/13/2003
1,3-Dichloropropane	ND	0.050		mg/Kg	1	11/13/2003
2,2-Dichloropropane	ND	0.050		mg/Kg	1	11/13/2003
1,1-Dichloropropene	ND	0.050		mg/Kg	1	11/13/2003
Hexachlorobutadiene	ND	0.050		mg/Kg	1	11/13/2003
2-Hexanone	ND	0.50		mg/Kg	1	11/13/2003
Isopropylbenzene	ND	0.050		mg/Kg	1	11/13/2003
4-Isopropyltoluene	ND	0.050		mg/Kg	1	11/13/2003
4-Methyl-2-pentanone	ND	0.50		mg/Kg	1	11/13/2003
Methylene chloride	ND	0.15		mg/Kg	1	11/13/2003
n-Butylbenzene	ND	0.050		mg/Kg	1	11/13/2003
n-Propylbenzene	ND	0.050		mg/Kg	1	11/13/2003
sec-Butylbenzene	ND	0.050		mg/Kg	1	11/13/2003
Styrene	ND	0.050		mg/Kg	1	11/13/2003
tert-Butylbenzene	ND	0.050		mg/Kg	1	11/13/2003
1,1,1,2-Tetrachloroethane	ND	0.050		mg/Kg	1	11/13/2003
1,1,2,2-Tetrachloroethane	ND	0.050		mg/Kg	1	11/13/2003
Tetrachloroethene (PCE)	ND	0.050		mg/Kg	1	11/13/2003
trans-1,2-DCE	ND	0.050		mg/Kg	1	11/13/2003
trans-1,3-Dichloropropene	ND	0.050		mg/Kg	1	11/13/2003
1,2,3-Trichlorobenzene	ND	0.050		mg/Kg	1	11/13/2003
1,2,4-Trichlorobenzene	ND	0.050		mg/Kg	1	11/13/2003
1,1,1-Trichloroethane	ND	0.050		mg/Kg	1	11/13/2003
1,1,2-Trichloroethane	ND	0.050		mg/Kg	1	11/13/2003
Trichloroethene (TCE)	ND	0.050		mg/Kg	1	11/13/2003
Trichlorofluoromethane	ND	0.050		mg/Kg	1	11/13/2003
1,2,3-Trichloropropane	ND	0.10		mg/Kg	1	11/13/2003
Vinyl chloride	ND	0.10		mg/Kg	1	11/13/2003
Xylenes, Total	ND	0.050		mg/Kg	1	11/13/2003
Surr: 1,2-Dichloroethane-d4	111	68.4-123		%REC	1	11/13/2003
Surr: 4-Bromofluorobenzene	93.8	70-119		%REC	1	11/13/2003
Surr: Dibromofluoromethane	98.3	76.8-123		%REC	1	11/13/2003
Surr: Toluene-d8	111	85.2-123		%REC	1	11/13/2003
EPA METHOD 8270D: SEMIVOLATILES						Analyst: **CS**
Acenaphthene	ND	0.20		mg/Kg	1	11/21/2003
Acenaphthylene	ND	0.20		mg/Kg	1	11/21/2003

Qualifiers:
ND - Not Detected at the Reporting Limit
J - Analyte detected below quantitation limits
B - Analyte detected in the associated Method Blank
* - Value exceeds Maximum Contaminant Level
S - Spike Recovery outside accepted recovery limits
R - RPD outside accepted recovery limits
E - Value above quantitation range

Hall Environmental Analysis Laboratory

Date: *12-Dec-03*

CLIENT: Kleinfelder
Client Sample ID: R-26 cuttings
Lab Order: 0311068
Collection Date: 11/10/2003 12:50:00 PM
Project: R-26
Lab ID: 0311068-03
Matrix: SOIL

Analyses	Result	Limit	Qual	Units	DF	Date Analyzed
Aniline	ND	0.20		mg/Kg	1	11/21/2003
Anthracene	ND	0.20		mg/Kg	1	11/21/2003
Azobenzene	ND	0.20		mg/Kg	1	11/21/2003
Benz(a)anthracene	ND	0.20		mg/Kg	1	11/21/2003
Benzidine	ND	0.20		mg/Kg	1	11/21/2003
Benzo(a)pyrene	ND	0.20		mg/Kg	1	11/21/2003
Benzo(b)fluoranthene	ND	0.20		mg/Kg	1	11/21/2003
Benzo(g,h,i)perylene	ND	0.20		mg/Kg	1	11/21/2003
Benzo(k)fluoranthene	ND	0.20		mg/Kg	1	11/21/2003
Benzoic acid	ND	0.50		mg/Kg	1	11/21/2003
Benzyl alcohol	ND	0.20		mg/Kg	1	11/21/2003
Bis(2-chloroethoxy)methane	ND	0.20		mg/Kg	1	11/21/2003
Bis(2-chloroethyl)ether	ND	0.20		mg/Kg	1	11/21/2003
Bis(2-chloroisopropyl)ether	ND	0.20		mg/Kg	1	11/21/2003
Bis(2-ethylhexyl)phthalate	ND	0.20		mg/Kg	1	11/21/2003
4-Bromophenyl phenyl ether	ND	0.20		mg/Kg	1	11/21/2003
Butyl benzyl phthalate	ND	0.20		mg/Kg	1	11/21/2003
Carbazole	ND	0.20		mg/Kg	1	11/21/2003
4-Chloro-3-methylphenol	ND	0.20		mg/Kg	1	11/21/2003
4-Chloroaniline	ND	0.20		mg/Kg	1	11/21/2003
2-Chloronaphthalene	ND	0.20		mg/Kg	1	11/21/2003
2-Chlorophenol	ND	0.20		mg/Kg	1	11/21/2003
4-Chlorophenyl phenyl ether	ND	0.20		mg/Kg	1	11/21/2003
Chrysene	ND	0.20		mg/Kg	1	11/21/2003
Di-n-butyl phthalate	0.25	0.20	B	mg/Kg	1	11/21/2003
Di-n-octyl phthalate	ND	0.20		mg/Kg	1	11/21/2003
Dibenz(a,h)anthracene	ND	0.20		mg/Kg	1	11/21/2003
Dibenzofuran	ND	0.20		mg/Kg	1	11/21/2003
1,2-Dichlorobenzene	ND	0.20		mg/Kg	1	11/21/2003
1,3-Dichlorobenzene	ND	0.20		mg/Kg	1	11/21/2003
1,4-Dichlorobenzene	ND	0.20		mg/Kg	1	11/21/2003
3,3'-Dichlorobenzidine	ND	0.20		mg/Kg	1	11/21/2003
Diethyl phthalate	ND	0.20		mg/Kg	1	11/21/2003
Dimethyl phthalate	ND	0.20		mg/Kg	1	11/21/2003
2,4-Dichlorophenol	ND	0.20		mg/Kg	1	11/21/2003
2,4-Dimethylphenol	ND	0.20		mg/Kg	1	11/21/2003
4,6-Dinitro-2-methylphenol	ND	0.50		mg/Kg	1	11/21/2003
2,4-Dinitrophenol	ND	0.50		mg/Kg	1	11/21/2003
2,4-Dinitrotoluene	ND	0.20		mg/Kg	1	11/21/2003
2,6-Dinitrotoluene	ND	0.20		mg/Kg	1	11/21/2003
Fluoranthene	ND	0.20		mg/Kg	1	11/21/2003
Fluorene	ND	0.20		mg/Kg	1	11/21/2003

Qualifiers:

ND - Not Detected at the Reporting Limit
J - Analyte detected below quantitation limit
B - Analyte detected in the associated Method Blank
* - Value exceeds Maximum Contaminant Level
S - Spike Recovery outside accepted recovery limits
R - RPD outside accepted recovery limits
E - Value above quantitation range

Hall Environmental Analysis Laboratory

Date: *12-Dec-03*

CLIENT: Kleinfelder
Lab Order: 0311068
Project: R-26
Lab ID: 0311068-03

Client Sample ID: R-26 cuttings
Collection Date: 11/10/2003 12:50:00 PM
Matrix: SOIL

Analyses	Result	Limit	Qual	Units	DF	Date Analyzed
Hexachlorobenzene	ND	0.20		mg/Kg	1	11/21/2003
Hexachlorobutadiene	ND	0.20		mg/Kg	1	11/21/2003
Hexachlorocyclopentadiene	ND	0.20		mg/Kg	1	11/21/2003
Hexachloroethane	ND	0.20		mg/Kg	1	11/21/2003
Indeno(1,2,3-cd)pyrene	ND	0.20		mg/Kg	1	11/21/2003
Isophorone	ND	0.20		mg/Kg	1	11/21/2003
2-Methylnaphthalene	ND	0.20		mg/Kg	1	11/21/2003
2-Methylphenol	ND	0.20		mg/Kg	1	11/21/2003
3+4-Methylphenol	ND	0.20		mg/Kg	1	11/21/2003
N-Nitrosodi-n-propylamine	ND	0.20		mg/Kg	1	11/21/2003
N-Nitrosodiphenylamine	ND	0.20		mg/Kg	1	11/21/2003
Naphthalene	ND	0.20		mg/Kg	1	11/21/2003
2-Nitroaniline	ND	0.50		mg/Kg	1	11/21/2003
3-Nitroaniline	ND	0.50		mg/Kg	1	11/21/2003
4-Nitroaniline	ND	0.20		mg/Kg	1	11/21/2003
Nitrobenzene	ND	0.20		mg/Kg	1	11/21/2003
2-Nitrophenol	ND	0.20		mg/Kg	1	11/21/2003
4-Nitrophenol	ND	0.20		mg/Kg	1	11/21/2003
Pentachlorophenol	ND	0.50		mg/Kg	1	11/21/2003
Phenanthrene	ND	0.20		mg/Kg	1	11/21/2003
Phenol	ND	0.20		mg/Kg	1	11/21/2003
Pyrene	ND	0.20		mg/Kg	1	11/21/2003
Pyridine	ND	0.50		mg/Kg	1	11/21/2003
1,2,4-Trichlorobenzene	ND	0.20		mg/Kg	1	11/21/2003
2,4,5-Trichlorophenol	ND	0.20		mg/Kg	1	11/21/2003
2,4,6-Trichlorophenol	ND	0.20		mg/Kg	1	11/21/2003
Surr: 2,4,6-Tribromophenol	75.9	26-156		%REC	1	11/21/2003
Surr: 2-Fluorobiphenyl	82.5	23.6-111		%REC	1	11/21/2003
Surr: 2-Fluorophenol	67.4	21.5-107		%REC	1	11/21/2003
Surr: 4-Terphenyl-d14	98.3	30-220		%REC	1	11/21/2003
Surr: Nitrobenzene-d5	70.3	25.3-115		%REC	1	11/21/2003
Surr: Phenol-d6	79.0	25.2-115		%REC	1	11/21/2003
MERCURY, TCLP LEACHED						Analyst: **MAP**
Mercury	ND	0.020		mg/L	1	11/21/2003
EPA METHOD 6010C: TCLP METALS						Analyst: **NMO**
Arsenic	ND	5.0		mg/L	1	11/21/2003 11:14:44 AM
Barium	ND	100		mg/L	1	11/21/2003 11:14:44 AM
Cadmium	ND	1.0		mg/L	1	11/21/2003 11:14:44 AM
Chromium	ND	5.0		mg/L	1	11/21/2003 11:14:44 AM
Lead	ND	5.0		mg/L	1	11/21/2003 11:14:44 AM
Selenium	ND	1.0		mg/L	1	11/21/2003 11:14:44 AM

Qualifiers:

ND - Not Detected at the Reporting Limit
J - Analyte detected below quantitation limit
B - Analyte detected in the associated Method Blank
* - Value exceeds Maximum Contaminant Level
S - Spike Recovery outside accepted recovery limits
R - RPD outside accepted recovery limits
E - Value above quantitation range

Hall Environmental Analysis Laboratory

Date: *12-Dec-03*

CLIENT: Kleinfelder
Lab Order: 0311068
Project: R-26
Lab ID: 0311068-03

Client Sample ID: R-26 cuttings
Collection Date: 11/10/2003 12:50:00 PM
Matrix: SOIL

Analyses	Result	Limit	Qual	Units	DF	Date Analyzed
Silver	ND	5.0		mg/L	1	11/21/2003 11:14:44 AM

Qualifiers:

ND - Not Detected at the Reporting Limit
J - Analyte detected below quantitation limit
B - Analyte detected in the associated Method Blank
* - Value exceeds Maximum Contaminant Level
S - Spike Recovery outside accepted recovery limits
R - RPD outside accepted recovery limits
E - Value above quantitation range

GENERAL ENGINEERING LABORATORIES, LLC
2040 Savage Road Charleston SC 29407 - (843) 556-8171 - www.gel.com

Certificate of Analysis

Company : Hall Environmental Analysis Labs
Address : 4901 Hawkins Ne
Suite D
Albuquerque, New Mexico 87109
Contact: Nancy McDuffie
Project: Hall Environmental

Report Date: December 11, 2003

Client Sample ID: R-26 Cuttings (chemistry)
Sample ID: 102538001
Matrix: Soil
Collect Date: 10-NOV-03 12:50
Receive Date: 24-NOV-03
Collector: Client
Moisture: 3.46%

Project: HALL00103
Client ID: HALL001

Parameter	Qualifier	Result	DL	RL	Units	DF	AnalystDate	Time	Batch	Method
HPLC Explosives										
8330 EXPLO. Std list Soil										
1,3,5-Trinitrobenzene	Uh	ND	29.0	80.0	ug/kg	1	MAP 12/02/03	1937	293844	1
2,4,6-Trinitrotoluene	Uh	ND	48.0	80.0	ug/kg	1				
2,4-Dinitrotoluene	Uh	ND	55.0	80.0	ug/kg	1				
2,6-Dinitrotoluene	Uh	ND	48.0	80.0	ug/kg	1				
2-Amino-4,6-dinitrotoluene	Uh	ND	18.1	80.0	ug/kg	1				
4-Amino-2,6-dinitrotoluene	Uh	ND	34.1	80.0	ug/kg	1				
HMX	Uh	ND	48.0	80.0	ug/kg	1				
Nitrobenzene	Uh	ND	48.0	80.0	ug/kg	1				
RDX	Uh	ND	48.0	80.0	ug/kg	1				
Tetryl	Uh	ND	22.1	80.0	ug/kg	1				
m-Dinitrobenzene	Uh	ND	34.1	80.0	ug/kg	1				
m-Nitrotoluene	Uh	ND	24.0	80.0	ug/kg	1				
o-Nitrotoluene	Uh	ND	24.0	80.0	ug/kg	1				
p-Nitrotoluene	Uh	ND	24.0	80.0	ug/kg	1				
Mercury Analysis-CVAA										
7471 Cold Vapor Hg in Solid										
Mercury	J	9.75	0.992	10.1	ug/kg	1	NOR1 12/01/03	1118	293699	2
Metals Analysis-ICP										
6010/3050 ICP SCAN Metals Soil										
Aluminum		5930000	822	10400	ug/kg	2	RMJ 12/03/03	2104	293758	3
Antimony	U	ND	356	1040	ug/kg	2				
Arsenic		2640	214	518	ug/kg	2				
Barium		70500	69.1	518	ug/kg	2				
Beryllium	J	460	51.8	518	ug/kg	2				
Cadmium	U	ND	49.5	518	ug/kg	2				
Calcium		2700000	1350	10400	ug/kg	2				
Chromium		5660	167	518	ug/kg	2				
Cobalt		2370	82.7	518	ug/kg	2				
Copper		7720	210	518	ug/kg	2				
Iron		7650000	1620	10400	ug/kg	2				
Lead		38000	294	518	ug/kg	2				
Magnesium		776000	606	10400	ug/kg	2				
Manganese		295000	135	1040	ug/kg	2				
Nickel		5490	88.5	518	ug/kg	2				
Potassium		515000	3700	10400	ug/kg	2				
Selenium	J	471	168	518	ug/kg	2				

GENERAL ENGINEERING LABORATORIES, LLC
2040 Savage Road Charleston SC 29407 - (843) 556-8171 - www.gel.com

Certificate of Analysis

Company : Hall Environmental Analysis Labs
Address : 4901 Hawkins Ne
Suite D
Albuquerque, New Mexico 87109
Contact: Nancy McDuffie
Project: Hall Environmental

Report Date: December 11, 2003

Client Sample ID: R-26 Cuttings (chemistry) Project: HALL00103
Sample ID: 102538001 Client ID: HALL001

Parameter	Qualifier	Result	DL	RL	Units	DF	AnalystDate	Time	Batch	Method
Metals Analysis-ICP										
6010/3050 ICP SCAN Metals Soil										
Silver	U	ND	93.4	518	ug/kg	2				
Sodium		441000	3760	10400	ug/kg	2				
Thallium	U	ND	1040	2070	ug/kg	2				
Vanadium		9820	94.1	518	ug/kg	2				
Zinc		27100	174	518	ug/kg	2				

The following Prep Methods were performed

Method	Description	Analyst	Date	Time	Prep Batch
SW846 3050B	846 3050BS PREP	CQH1	12/02/03	1623	293757
SW846 7471A Prep	EPA 7471A Mercury Prep Soil	ETL	11/26/03	1115	293697
SW846 8330 PREP	8330 EXPLOSIVES BY HPLC Prep in soil	HMF1	12/01/03	1200	293843

The following Analytical Methods were performed

Method	Description	Analyst Comments
1	SW846 8330	
2	SW846 7471A	
3	SW846 3050B/6010B	

Surrogate/Tracer recovery	Test	Recovery%	Acceptable Limits
1,2-dinitrobenzene	8330 EXPLO. Std list Soil	83	(76%-114%)

Notes:
The Qualifiers in this report are defined as follows :

< Result is less than amount reported.
> Result is greater than amount reported.
B Target analyte was detected in the sample as well as the associated blank.
BD Flag for results below the MDC or a flag for low tracer recovery.
E Concentration of the target analyte exceeds the instrument calibration range.
H Analytical holding time exceeded.
J Indicates an estimated value. The result was greater than the detection limit, but less than the reporting limit.
P The response between the confirmation column and the primary column is >40%D.
U Indicates the target analyte was analyzed for but not detected above the detection limit.
UI Uncertain identification for gamma spectroscopy.
X Lab-specific qualifier-please see case narrative, data summary package or contact your project manager for details.
Y QC Samples were not spiked with this compound.
h Sample preparation or preservation holding time exceeded.

The above sample is reported on a dry weight basis except where prohibited by the analytical procedure.

GENERAL ENGINEERING LABORATORIES, LLC
2040 Savage Road Charleston SC 29407 - (843) 556-8171 - www.gel.com

Certificate of Analysis

Company : Hall Environmental Analysis Labs
Address : 4901 Hawkins Ne
Suite D
Albuquerque, New Mexico 87109
Contact: Nancy McDuffie
Project: Hall Environmental

Report Date: December 11, 2003

Client Sample ID: R-26 Cuttings (chemistry) Project: HALL00103
Sample ID: 102538001 Client ID: HALL001

Parameter	Qualifier	Result	DL	RL	Units	DF	AnalystDate	Time	Batch	Method

Where the analytical method has been performed under NELAP certification, the analysis has met all of the requirements of the NELAC standard unless qualified on the Certificate of Analysis.

This data report has been prepared and reviewed in accordance with General Engineering Laboratories, LLC standard operating procedures. Please direct any questions to your Project Manager, Amy Jamison.

Reviewed by

GENERAL ENGINEERING LABORATORIES, LLC
2040 Savage Road Charleston SC 29407 - (843) 556-8171 - www.gel.com

Certificate of Analysis

Company : Hall Environmental Analysis Labs
Address : 4901 Hawkins Ne
Suite D
Albuquerque, New Mexico 87109
Contact: Nancy McDuffie
Project: Hall Environmental

Report Date: December 11, 2003

Client Sample ID: R-26 Cuttings (radiochemistry)
Sample ID: 102538002
Matrix: Soil
Collect Date: 10-NOV-03 12:50
Receive Date: 24-NOV-03
Collector: Client

Project: HALL00103
Client ID: HALL001

Parameter	Qualifier	Result		DL	RL	Units	DF	AnalystDate	Time	Batch	Method
Rad Alpha Spec Analysis											
Alphaspec Am241 Solid											
Alphaspec Pu, Solid											
Alphaspec Th, Solid											
Alphaspec U, Solid											
Rad Gamma Spec Analysis											
Gammaspec, Gamma, Solid Cs137											
Cesium-137	U	ND	+/-0.029	0.0396	0.100	pCi/g		SRB 12/08/03	1914	295765	5
Rad Gas Flow Proportional Counting											
GFPC, Sr90, solid											
Rad Liquid Scintillation Analysis											
LSC, Tritium Dist, Solid											

The following Prep Methods were performed

Method	Description	Analyst	Date	Time	Prep Batch
Ash Soil Prep	Ash Soil Prep, GL-RAD-A-021B	AWB	11/26/03	0728	293729
Dry Soil Prep	Dry Soil Prep GL-RAD-A-021	AWB	11/25/03	1249	293727

The following Analytical Methods were performed

Method	Description	Analyst Comments
1	DOE EML HASL-300, Am-05-RC Modified	
2	DOE EML HASL-300, Pu-11-RC Modified	
3	DOE EML HASL-300, Th-01-RC Modified	
4	DOE EML HASL-300, U-02-RC Modified	
5	EML HASL 300, 4.5.2.3	
6	EPA 905.0 Modified	
7	EPA 906.0 Modified	

Notes:
The Qualifiers in this report are defined as follows :

< Result is less than amount reported.
> Result is greater than amount reported.
B Target analyte was detected in the sample as well as the associated blank.
BD Flag for results below the MDC or a flag for low tracer recovery.

GENERAL ENGINEERING LABORATORIES, LLC
2040 Savage Road Charleston SC 29407 - (843) 556-8171 - www.gel.com

Certificate of Analysis

Company : Hall Environmental Analysis Labs
Address : 4901 Hawkins Ne
Suite D
Albuquerque, New Mexico 87109
Contact: Nancy McDuffie
Project: Hall Environmental

Report Date: December 11, 2003

Client Sample ID: R-26 Cuttings (radiochemistry) Project: HALL00103
Sample ID: 102538002 Client ID: HALL001

Parameter	Qualifier	Result	DL	RL	Units	DF	AnalystDate	Time	Batch	Method

E Concentration of the target analyte exceeds the instrument calibration range.
H Analytical holding time exceeded.
J Indicates an estimated value. The result was greater than the detection limit, but less than the reporting limit.
P The response between the confirmation column and the primary column is >40%D.
U Indicates the target analyte was analyzed for but not detected above the detection limit.
UI Uncertain identification for gamma spectroscopy.
X Lab-specific qualifier-please see case narrative, data summary package or contact your project manager for details.
Y QC Samples were not spiked with this compound.
h Sample preparation or preservation holding time exceeded.

The above sample is reported on a dry weight basis except where prohibited by the analytical procedure.
Where the analytical method has been performed under NELAP certification, the analysis has met all of the requirements of the NELAC standard unless qualified on the Certificate of Analysis.

This data report has been prepared and reviewed in accordance with General Engineering Laboratories, LLC standard operating procedures. Please direct any questions to your Project Manager, Amy Jamison.

Reviewed by

GENERAL ENGINEERING LABORATORIES, LLC
2040 Savage Road Charleston SC 29407 - (843) 556-8171 - www.gel.com

Certificate of Analysis

Company : Hall Environmental Analysis Labs
Address : 4901 Hawkins Ne
Suite D
Albuquerque, New Mexico 87109
Contact: Nancy McDuffie
Project: **Hall Environmental**

Report Date: January 15, 2004

Client Sample ID: R-26 Cuttings
Sample ID: 103826001
Matrix: Soil
Collect Date: 12-DEC-03 14:00
Receive Date: 16-DEC-03
Collector: Client

Project: HALL00103
Client ID: HALL001

Parameter	Qualifier	Result	DL	RL	Units	DF	AnalystDate	Time	Batch	Method
LC-MS/MS Explosives										
SW846 8321A Modified Explosives by LC-MS/MS										
1,3,5-Trinitrobenzene	U	ND	9.86	80.0	ug/kg	1	JLW 01/09/04	1745	302199	1
2,4,6-Trinitrotoluene	U	ND	7.68	80.0	ug/kg	1				
2,4-Dinitrotoluene	U	ND	10.0	80.0	ug/kg	1				
2,6-Dinitrotoluene	U	ND	8.90	80.0	ug/kg	1				
2-Amino-4,6-dinitrotoluene	U	ND	15.0	80.0	ug/kg	1				
4-Amino-2,6-dinitrotoluene	U	ND	19.1	80.0	ug/kg	1				
HMX	U	ND	40.0	80.0	ug/kg	1				
Nitrobenzene	U	ND	20.3	80.0	ug/kg	1				
RDX	U	ND	9.35	80.0	ug/kg	1				
Tetryl	U	ND	16.7	80.0	ug/kg	1				
m-Dinitrobenzene	U	ND	10.7	80.0	ug/kg	1				
m-Nitrotoluene	U	ND	23.8	80.0	ug/kg	1				
o-Nitrotoluene	U	ND	26.5	80.0	ug/kg	1				
p-Nitrotoluene	U	ND	80.0	80.0	ug/kg	1				

The following Prep Methods were performed

Method	Description	Analyst	Date	Time	Prep Batch
SW846 8330 PREP	8330 EXPLOSIVES BY HPLC Prep in soil	KXV1	12/21/03	1100	298568
SW846 8330 PREP	SW846 8330 Explosives Extraction in Solids	KXV1	12/21/03	1100	302198

The following Analytical Methods were performed

Method	Description	Analyst Comments
1	SW846 8321A Modified	
2	SW846 8321A Modified	

Surrogate/Tracer recovery	Test	Recovery%	Acceptable Limits
1,2-dinitrobenzene	SW846 8321A Modified Explosives by LC-MS/MS	55 *	(63%-119%)

Notes:
The Qualifiers in this report are defined as follows :

< Result is less than amount reported.
> Result is greater than amount reported.
B Target analyte was detected in the sample as well as the associated blank.
BD Flag for results below the MDC or a flag for low tracer recovery.

GENERAL ENGINEERING LABORATORIES, LLC
2040 Savage Road Charleston SC 29407 - (843) 556-8171 - www.gel.com

Certificate of Analysis

Company : Hall Environmental Analysis Labs
Address : 4901 Hawkins Ne
Suite D
Albuquerque, New Mexico 87109
Contact: Nancy McDuffie
Project: **Hall Environmental**

Report Date: January 15, 2004

Client Sample ID: R-26 Cuttings
Sample ID: 103826001

Project: HALL00103
Client ID: HALL001

Parameter	Qualifier	Result	DL	RL	Units	DF	AnalystDate	Time	Batch	Method

E Concentration of the target analyte exceeds the instrument calibration range.
H Analytical holding time exceeded.
J Indicates an estimated value. The result was greater than the detection limit, but less than the reporting limit.
P The response between the confirmation column and the primary column is >40%D.
U Indicates the target analyte was analyzed for but not detected above the detection limit.
UI Uncertain identification for gamma spectroscopy.
X Lab-specific qualifier-please see case narrative, data summary package or contact your project manager for details.
Y QC Samples were not spiked with this compound.
h Sample preparation or preservation holding time exceeded.

The above sample is reported on an "as received" basis.

Where the analytical method has been performed under NELAP certification, the analysis has met all of the requirements of the NELAC standard unless qualified on the Certificate of Analysis.

This data report has been prepared and reviewed in accordance with General Engineering Laboratories, LLC standard operating procedures. Please direct any questions to your Project Manager, Amy Jamison.

Reviewed by

Hall Environmental
Analysis Laboratory

COVER LETTER

December 22, 2003

Mark Everett
Kleinfelder
8300 Jefferson, NE Suite B
Albuquerque, NM 87113
TEL: (505) 344-7373
FAX (505) 344-1711

RE: R-26 Order No.: 0311068

Dear Mark Everett:

Hall Environmental Analysis Laboratory received 3 samples on 11/10/2003 for the analyses presented in the following report.

These were analyzed according to EPA procedures or equivalent.

Reporting limits are determined by EPA methodology. No determination of compounds below these (denoted by the ND or < sign) has been made.

Please don't hesitate to contact HEAL for any additional information or clarifications.

Sincerely,

Andy Freeman, Business Manager
Nancy McDuffie, Laboratory Manager

Andy Freeman
Business Manager

Hall Environmental Analysis Laboratory

Date: *22-Dec-03*

CLIENT: Kleinfelder
Client Sample ID: R-26 pit
Lab Order: 0311068
Collection Date: 11/10/2003 12:50:00 PM
Project: R-26
Lab ID: 0311068-01
Matrix: AQUEOUS

Analyses	Result	Limit	Qual	Units	DF	Date Analyzed
EPA METHOD 300.0: ANIONS						Analyst: **BDH**
Fluoride	0.21	0.10		mg/L	1	11/10/2003 10:16:48 PM
Chloride	2.4	0.10		mg/L	1	11/10/2003 10:16:48 PM
Nitrogen, Nitrite (As N)	ND	0.10		mg/L	1	11/10/2003 10:16:48 PM
Bromide	6.7	0.10		mg/L	1	11/10/2003 10:16:48 PM
Nitrogen, Nitrate (As N)	ND	0.10		mg/L	1	11/10/2003 10:16:48 PM
Phosphorus, Orthophosphate (As P)	ND	0.50		mg/L	1	11/10/2003 10:16:48 PM
Sulfate	49	0.50		mg/L	1	11/10/2003 10:16:48 PM
EPA METHOD 8082: PCB'S						Analyst: **GT**
Aroclor 1016	ND	1.0		µg/L	1	11/20/2003 10:20:09 AM
Aroclor 1221	ND	5.0		µg/L	1	11/20/2003 10:20:09 AM
Aroclor 1232	ND	1.0		µg/L	1	11/20/2003 10:20:09 AM
Aroclor 1242	ND	1.0		µg/L	1	11/20/2003 10:20:09 AM
Aroclor 1248	ND	1.0		µg/L	1	11/20/2003 10:20:09 AM
Aroclor 1254	ND	1.0		µg/L	1	11/20/2003 10:20:09 AM
Aroclor 1260	ND	1.0		µg/L	1	11/20/2003 10:20:09 AM
Surr: Decachlorobiphenyl	87.4	76-111		%REC	1	11/20/2003 10:20:09 AM
Surr: Tetrachloro-m-xylene	67.4	47-94		%REC	1	11/20/2003 10:20:09 AM
EPA METHOD 8260B: VOLATILES						Analyst: **JDC**
Benzene	ND	10		µg/L	10	11/11/2003
Toluene	13	10		µg/L	10	11/11/2003
Ethylbenzene	ND	10		µg/L	10	11/11/2003
Methyl tert-butyl ether (MTBE)	ND	10		µg/L	10	11/11/2003
1,2,4-Trimethylbenzene	ND	10		µg/L	10	11/11/2003
1,3,5-Trimethylbenzene	ND	10		µg/L	10	11/11/2003
1,2-Dichloroethane (EDC)	ND	10		µg/L	10	11/11/2003
1,2-Dibromoethane (EDB)	ND	10		µg/L	10	11/11/2003
Naphthalene	ND	20		µg/L	10	11/11/2003
1-Methylnaphthalene	ND	40		µg/L	10	11/11/2003
2-Methylnaphthalene	ND	40		µg/L	10	11/11/2003
Acetone	2100	100		µg/L	10	11/11/2003
Bromobenzene	ND	10		µg/L	10	11/11/2003
Bromochloromethane	ND	10		µg/L	10	11/11/2003
Bromodichloromethane	ND	10		µg/L	10	11/11/2003
Bromoform	ND	10		µg/L	10	11/11/2003
Bromomethane	ND	20		µg/L	10	11/11/2003
2-Butanone	ND	100		µg/L	10	11/11/2003
Carbon disulfide	ND	100		µg/L	10	11/11/2003
Carbon Tetrachloride	ND	10		µg/L	10	11/11/2003
Chlorobenzene	ND	10		µg/L	10	11/11/2003
Chloroethane	ND	20		µg/L	10	11/11/2003

Qualifiers:

ND - Not Detected at the Reporting Limit
J - Analyte detected below quantitation limits
B - Analyte detected in the associated Method Blank
* - Value exceeds Maximum Contaminant Level
S - Spike Recovery outside accepted recovery limits
R - RPD outside accepted recovery limits
E - Value above quantitation range

Hall Environmental Analysis Laboratory

Date: *22-Dec-03*

CLIENT: Kleinfelder
Lab Order: 0311068
Project: R-26
Lab ID: 0311068-01

Client Sample ID: R-26 pit
Collection Date: 11/10/2003 12:50:00 PM
Matrix: AQUEOUS

Analyses	Result	Limit	Qual	Units	DF	Date Analyzed
Chloroform	ND	10		µg/L	10	11/11/2003
Chloromethane	ND	10		µg/L	10	11/11/2003
2-Chlorotoluene	ND	10		µg/L	10	11/11/2003
4-Chlorotoluene	ND	10		µg/L	10	11/11/2003
cis-1,2-DCE	ND	10		µg/L	10	11/11/2003
cis-1,3-Dichloropropene	ND	10		µg/L	10	11/11/2003
1,2-Dibromo-3-chloropropane	ND	20		µg/L	10	11/11/2003
Dibromochloromethane	ND	10		µg/L	10	11/11/2003
Dibromomethane	ND	20		µg/L	10	11/11/2003
1,2-Dichlorobenzene	ND	10		µg/L	10	11/11/2003
1,3-Dichlorobenzene	ND	10		µg/L	10	11/11/2003
1,4-Dichlorobenzene	ND	10		µg/L	10	11/11/2003
Dichlorodifluoromethane	ND	10		µg/L	10	11/11/2003
1,1-Dichloroethane	ND	10		µg/L	10	11/11/2003
1,1-Dichloroethene	ND	10		µg/L	10	11/11/2003
1,2-Dichloropropane	ND	10		µg/L	10	11/11/2003
1,3-Dichloropropane	ND	10		µg/L	10	11/11/2003
2,2-Dichloropropane	ND	10		µg/L	10	11/11/2003
1,1-Dichloropropene	ND	10		µg/L	10	11/11/2003
Hexachlorobutadiene	ND	10		µg/L	10	11/11/2003
2-Hexanone	ND	100		µg/L	10	11/11/2003
Isopropylbenzene	ND	10		µg/L	10	11/11/2003
4-Isopropyltoluene	ND	10		µg/L	10	11/11/2003
4-Methyl-2-pentanone	ND	100		µg/L	10	11/11/2003
Methylene Chloride	ND	30		µg/L	10	11/11/2003
n-Butylbenzene	ND	10		µg/L	10	11/11/2003
n-Propylbenzene	ND	10		µg/L	10	11/11/2003
sec-Butylbenzene	ND	10		µg/L	10	11/11/2003
Styrene	ND	10		µg/L	10	11/11/2003
tert-Butylbenzene	ND	10		µg/L	10	11/11/2003
1,1,1,2-Tetrachloroethane	ND	10		µg/L	10	11/11/2003
1,1,2,2-Tetrachloroethane	ND	10		µg/L	10	11/11/2003
Tetrachloroethene (PCE)	ND	10		µg/L	10	11/11/2003
trans-1,2-DCE	ND	10		µg/L	10	11/11/2003
trans-1,3-Dichloropropene	ND	10		µg/L	10	11/11/2003
1,2,3-Trichlorobenzene	ND	10		µg/L	10	11/11/2003
1,2,4-Trichlorobenzene	ND	10		µg/L	10	11/11/2003
1,1,1-Trichloroethane	ND	10		µg/L	10	11/11/2003
1,1,2-Trichloroethane	ND	10		µg/L	10	11/11/2003
Trichloroethene (TCE)	ND	10		µg/L	10	11/11/2003
Trichlorofluoromethane	ND	10		µg/L	10	11/11/2003
1,2,3-Trichloropropane	ND	20		µg/L	10	11/11/2003

Qualifiers:

ND - Not Detected at the Reporting Limit
J - Analyte detected below quantitation limits
B - Analyte detected in the associated Method Blank
* - Value exceeds Maximum Contaminant Level
S - Spike Recovery outside accepted recovery limits
R - RPD outside accepted recovery limits
E - Value above quantitation range

CLIENT: Kleinfelder
Lab Order: 0311068
Project: R-26
Lab ID: 0311068-01

Client Sample ID: R-26 pit
Collection Date: 11/10/2003 12:50:00 PM
Matrix: AQUEOUS

Analyses	Result	Limit	Qual	Units	DF	Date Analyzed
Vinyl chloride	ND	20		µg/L	10	11/11/2003
Xylenes, Total	ND	10		µg/L	10	11/11/2003
Surr: 1,2-Dichloroethane-d4	96.4	70.6-124		%REC	10	11/11/2003
Surr: 4-Bromofluorobenzene	92.8	76.2-122		%REC	10	11/11/2003
Surr: Dibromofluoromethane	94.1	67.2-131		%REC	10	11/11/2003
Surr: Toluene-d8	107	82.1-123		%REC	10	11/11/2003
EPA METHOD 8270D: SEMIVOLATILES						Analyst: **CS**
Acenaphthene	ND	100		µg/L	1	11/14/2003
Acenaphthylene	ND	100		µg/L	1	11/14/2003
Aniline	ND	100		µg/L	1	11/14/2003
Anthracene	ND	100		µg/L	1	11/14/2003
Azobenzene	ND	100		µg/L	1	11/14/2003
Benz(a)anthracene	ND	100		µg/L	1	11/14/2003
Benzidine	ND	200		µg/L	1	11/14/2003
Benzo(a)pyrene	ND	100		µg/L	1	11/14/2003
Benzo(b)fluoranthene	ND	100		µg/L	1	11/14/2003
Benzo(g,h,i)perylene	ND	100		µg/L	1	11/14/2003
Benzo(k)fluoranthene	ND	100		µg/L	1	11/14/2003
Benzoic acid	ND	500		µg/L	1	11/14/2003
Benzyl alcohol	ND	200		µg/L	1	11/14/2003
Bis(2-chloroethoxy)methane	ND	100		µg/L	1	11/14/2003
Bis(2-chloroethyl)ether	ND	100		µg/L	1	11/14/2003
Bis(2-chloroisopropyl)ether	ND	100		µg/L	1	11/14/2003
Bis(2-ethylhexyl)phthalate	ND	100		µg/L	1	11/14/2003
4-Bromophenyl phenyl ether	ND	100		µg/L	1	11/14/2003
Butyl benzyl phthalate	ND	100		µg/L	1	11/14/2003
Carbazole	ND	100		µg/L	1	11/14/2003
4-Chloro-3-methylphenol	ND	200		µg/L	1	11/14/2003
4-Chloroaniline	ND	200		µg/L	1	11/14/2003
2-Chloronaphthalene	ND	100		µg/L	1	11/14/2003
2-Chlorophenol	ND	100		µg/L	1	11/14/2003
4-Chlorophenyl phenyl ether	ND	100		µg/L	1	11/14/2003
Chrysene	ND	100		µg/L	1	11/14/2003
Di-n-butyl phthalate	ND	100		µg/L	1	11/14/2003
Di-n-octyl phthalate	ND	100		µg/L	1	11/14/2003
Dibenz(a,h)anthracene	ND	100		µg/L	1	11/14/2003
Dibenzofuran	ND	100		µg/L	1	11/14/2003
1,2-Dichlorobenzene	ND	100		µg/L	1	11/14/2003
1,3-Dichlorobenzene	ND	100		µg/L	1	11/14/2003
1,4-Dichlorobenzene	ND	100		µg/L	1	11/14/2003
3,3'-Dichlorobenzidine	ND	100		µg/L	1	11/14/2003
Diethyl phthalate	ND	100		µg/L	1	11/14/2003

Qualifiers:
ND - Not Detected at the Reporting Limit
J - Analyte detected below quantitation limits
B - Analyte detected in the associated Method Blank
* - Value exceeds Maximum Contaminant Level
S - Spike Recovery outside accepted recovery limits
R - RPD outside accepted recovery limits
E - Value above quantitation range

Hall Environmental Analysis Laboratory

Date: *22-Dec-03*

CLIENT: Kleinfelder
Client Sample ID: R-26 pit
Lab Order: 0311068
Collection Date: 11/10/2003 12:50:00 PM
Project: R-26
Lab ID: 0311068-01
Matrix: AQUEOUS

Analyses	Result	Limit	Qual	Units	DF	Date Analyzed
Dimethyl phthalate	ND	100		µg/L	1	11/14/2003
2,4-Dichlorophenol	ND	100		µg/L	1	11/14/2003
2,4-Dimethylphenol	ND	100		µg/L	1	11/14/2003
4,6-Dinitro-2-methylphenol	ND	500		µg/L	1	11/14/2003
2,4-Dinitrophenol	ND	500		µg/L	1	11/14/2003
2,4-Dinitrotoluene	ND	100		µg/L	1	11/14/2003
2,6-Dinitrotoluene	ND	100		µg/L	1	11/14/2003
Fluoranthene	ND	100		µg/L	1	11/14/2003
Fluorene	ND	100		µg/L	1	11/14/2003
Hexachlorobenzene	ND	100		µg/L	1	11/14/2003
Hexachlorobutadiene	ND	100		µg/L	1	11/14/2003
Hexachlorocyclopentadiene	ND	100		µg/L	1	11/14/2003
Hexachloroethane	ND	100		µg/L	1	11/14/2003
Indeno(1,2,3-cd)pyrene	ND	100		µg/L	1	11/14/2003
Isophorone	ND	100		µg/L	1	11/14/2003
2-Methylnaphthalene	ND	100		µg/L	1	11/14/2003
2-Methylphenol	ND	100		µg/L	1	11/14/2003
3+4-Methylphenol	ND	100		µg/L	1	11/14/2003
N-Nitrosodi-n-propylamine	ND	100		µg/L	1	11/14/2003
N-Nitrosodiphenylamine	ND	100		µg/L	1	11/14/2003
Naphthalene	ND	100		µg/L	1	11/14/2003
2-Nitroaniline	ND	500		µg/L	1	11/14/2003
3-Nitroaniline	ND	500		µg/L	1	11/14/2003
4-Nitroaniline	ND	200		µg/L	1	11/14/2003
Nitrobenzene	ND	100		µg/L	1	11/14/2003
2-Nitrophenol	ND	100		µg/L	1	11/14/2003
4-Nitrophenol	ND	500		µg/L	1	11/14/2003
Pentachlorophenol	ND	500		µg/L	1	11/14/2003
Phenanthrene	ND	100		µg/L	1	11/14/2003
Phenol	ND	100		µg/L	1	11/14/2003
Pyrene	ND	100		µg/L	1	11/14/2003
Pyridine	ND	100		µg/L	1	11/14/2003
1,2,4-Trichlorobenzene	ND	100		µg/L	1	11/14/2003
2,4,5-Trichlorophenol	ND	100		µg/L	1	11/14/2003
2,4,6-Trichlorophenol	ND	100		µg/L	1	11/14/2003
Surr: 2,4,6-Tribromophenol	57.2	16.6-115		%REC	1	11/14/2003
Surr: 2-Fluorobiphenyl	47.4	37-95.7		%REC	1	11/14/2003
Surr: 2-Fluorophenol	39.3	9.54-89.8		%REC	1	11/14/2003
Surr: 4-Terphenyl-d14	68.0	47.9-115		%REC	1	11/14/2003
Surr: Nitrobenzene-d5	45.7	38-106		%REC	1	11/14/2003
Surr: Phenol-d6	31.5	10.7-63.4		%REC	1	11/14/2003

Qualifiers:

ND - Not Detected at the Reporting Limit
J - Analyte detected below quantitation limits
B - Analyte detected in the associated Method Blank
* - Value exceeds Maximum Contaminant Level
S - Spike Recovery outside accepted recovery limits
R - RPD outside accepted recovery limits
E - Value above quantitation range

Hall Environmental Analysis Laboratory

Date: *22-Dec-03*

CLIENT: Kleinfelder
Client Sample ID: Trip Blank
Lab Order: 0311068
Collection Date:
Project: R-26
Lab ID: 0311068-02
Matrix: TRIP BLANK

Analyses	Result	Limit	Qual	Units	DF	Date Analyzed
EPA METHOD 8260B: VOLATILES						Analyst: **JDC**
Benzene	ND	1.0		µg/L	1	11/11/2003
Toluene	ND	1.0		µg/L	1	11/11/2003
Ethylbenzene	ND	1.0		µg/L	1	11/11/2003
Methyl tert-butyl ether (MTBE)	ND	1.0		µg/L	1	11/11/2003
1,2,4-Trimethylbenzene	ND	1.0		µg/L	1	11/11/2003
1,3,5-Trimethylbenzene	ND	1.0		µg/L	1	11/11/2003
1,2-Dichloroethane (EDC)	ND	1.0		µg/L	1	11/11/2003
1,2-Dibromoethane (EDB)	ND	1.0		µg/L	1	11/11/2003
Naphthalene	ND	2.0		µg/L	1	11/11/2003
1-Methylnaphthalene	ND	4.0		µg/L	1	11/11/2003
2-Methylnaphthalene	ND	4.0		µg/L	1	11/11/2003
Acetone	ND	10		µg/L	1	11/11/2003
Bromobenzene	ND	1.0		µg/L	1	11/11/2003
Bromochloromethane	ND	1.0		µg/L	1	11/11/2003
Bromodichloromethane	ND	1.0		µg/L	1	11/11/2003
Bromoform	ND	1.0		µg/L	1	11/11/2003
Bromomethane	ND	2.0		µg/L	1	11/11/2003
2-Butanone	ND	10		µg/L	1	11/11/2003
Carbon disulfide	ND	10		µg/L	1	11/11/2003
Carbon Tetrachloride	ND	1.0		µg/L	1	11/11/2003
Chlorobenzene	ND	1.0		µg/L	1	11/11/2003
Chloroethane	ND	2.0		µg/L	1	11/11/2003
Chloroform	ND	1.0		µg/L	1	11/11/2003
Chloromethane	ND	1.0		µg/L	1	11/11/2003
2-Chlorotoluene	ND	1.0		µg/L	1	11/11/2003
4-Chlorotoluene	ND	1.0		µg/L	1	11/11/2003
cis-1,2-DCE	ND	1.0		µg/L	1	11/11/2003
cis-1,3-Dichloropropene	ND	1.0		µg/L	1	11/11/2003
1,2-Dibromo-3-chloropropane	ND	2.0		µg/L	1	11/11/2003
Dibromochloromethane	ND	1.0		µg/L	1	11/11/2003
Dibromomethane	ND	2.0		µg/L	1	11/11/2003
1,2-Dichlorobenzene	ND	1.0		µg/L	1	11/11/2003
1,3-Dichlorobenzene	ND	1.0		µg/L	1	11/11/2003
1,4-Dichlorobenzene	ND	1.0		µg/L	1	11/11/2003
Dichlorodifluoromethane	ND	1.0		µg/L	1	11/11/2003
1,1-Dichloroethane	ND	1.0		µg/L	1	11/11/2003
1,1-Dichloroethene	ND	1.0		µg/L	1	11/11/2003
1,2-Dichloropropane	ND	1.0		µg/L	1	11/11/2003
1,3-Dichloropropane	ND	1.0		µg/L	1	11/11/2003
2,2-Dichloropropane	ND	1.0		µg/L	1	11/11/2003
1,1-Dichloropropene	ND	1.0		µg/L	1	11/11/2003

Qualifiers:
ND - Not Detected at the Reporting Limit
J - Analyte detected below quantitation limits
B - Analyte detected in the associated Method Blank
* - Value exceeds Maximum Contaminant Level
S - Spike Recovery outside accepted recovery limits
R - RPD outside accepted recovery limits
E - Value above quantitation range

Hall Environmental Analysis Laboratory

Date: *22-Dec-03*

CLIENT: Kleinfelder
Client Sample ID: Trip Blank
Lab Order: 0311068
Collection Date:
Project: R-26
Lab ID: 0311068-02
Matrix: TRIP BLANK

Analyses	Result	Limit	Qual	Units	DF	Date Analyzed
Hexachlorobutadiene	ND	1.0		µg/L	1	11/11/2003
2-Hexanone	ND	10		µg/L	1	11/11/2003
Isopropylbenzene	ND	1.0		µg/L	1	11/11/2003
4-Isopropyltoluene	ND	1.0		µg/L	1	11/11/2003
4-Methyl-2-pentanone	ND	10		µg/L	1	11/11/2003
Methylene Chloride	ND	3.0		µg/L	1	11/11/2003
n-Butylbenzene	ND	1.0		µg/L	1	11/11/2003
n-Propylbenzene	ND	1.0		µg/L	1	11/11/2003
sec-Butylbenzene	ND	1.0		µg/L	1	11/11/2003
Styrene	ND	1.0		µg/L	1	11/11/2003
tert-Butylbenzene	ND	1.0		µg/L	1	11/11/2003
1,1,1,2-Tetrachloroethane	ND	1.0		µg/L	1	11/11/2003
1,1,2,2-Tetrachloroethane	ND	1.0		µg/L	1	11/11/2003
Tetrachloroethene (PCE)	ND	1.0		µg/L	1	11/11/2003
trans-1,2-DCE	ND	1.0		µg/L	1	11/11/2003
trans-1,3-Dichloropropene	ND	1.0		µg/L	1	11/11/2003
1,2,3-Trichlorobenzene	ND	1.0		µg/L	1	11/11/2003
1,2,4-Trichlorobenzene	ND	1.0		µg/L	1	11/11/2003
1,1,1-Trichloroethane	ND	1.0		µg/L	1	11/11/2003
1,1,2-Trichloroethane	ND	1.0		µg/L	1	11/11/2003
Trichloroethene (TCE)	ND	1.0		µg/L	1	11/11/2003
Trichlorofluoromethane	ND	1.0		µg/L	1	11/11/2003
1,2,3-Trichloropropane	ND	2.0		µg/L	1	11/11/2003
Vinyl chloride	ND	2.0		µg/L	1	11/11/2003
Xylenes, Total	ND	1.0		µg/L	1	11/11/2003
Surr: 1,2-Dichloroethane-d4	96.2	70.6-124		%REC	1	11/11/2003
Surr: 4-Bromofluorobenzene	89.1	76.2-122		%REC	1	11/11/2003
Surr: Dibromofluoromethane	95.4	67.2-131		%REC	1	11/11/2003
Surr: Toluene-d8	105	82.1-123		%REC	1	11/11/2003

Qualifiers:

ND - Not Detected at the Reporting Limit
J - Analyte detected below quantitation limits
B - Analyte detected in the associated Method Blank
* - Value exceeds Maximum Contaminant Level
S - Spike Recovery outside accepted recovery limits
R - RPD outside accepted recovery limits
E - Value above quantitation range

Environmental Health Laboratories
The Nation's Drinking Water Laboratory

110 S. Hill Street
South Bend, IN 46617
574.233.4777
800.332.4345
Fax: 574.233.8207
www.ehl.cc

LABORATORY REPORT

Client: Hall Environmental
Attn: Andy Freeman
4901 Hawkins NE
Suite A
Albuquerque, NM 87109

Report#: 966062

Priority: Standard Written

Status: Final

Project/Site: R-26 pit / 0311068-01E

Samples Submitted: One groundwater sample

Copies to: None

Collected: 11/10/03 By: Client Received: 11/12/03

REPORT SUMMARY

One groundwater sample was submitted for perchlorate analysis.

Note: Sample container was provided by the client.

Detailed quantitative results are presented on the following page.

We appreciate the opportunity to provide you with this analysis. If you have any questions concerning this report, please do not hesitate to call us at (574) 233-4777.

Note: This report may not be reproduced, except in full, without written approval from Environmental Health Laboratories (EHL). EHL is accredited by the National Environmental Laboratory Accreditation Program (NELAP). This report satisfies the requirements of your project but has not been prepared to comply with NELAP reporting requirements.

REVIEWED BY: William Reeves Reporting Manager DATE: 11/21/03

FINALIZED BY: [signature] f. on DATE: 11-21-03

A Division of Underwriters Laboratories Inc.

Client: Hall Environmental Report#: 966062

PERCHLORATE — Groundwater

Lab#	Sampling Point	MRL	Results
966062	R-26 pit / 0311068-01E	4.0	< 400 † ug/L

Analyzed: 11/14/03 Analyst: NB Method: 314.0

† Result presented is based upon a dilution factor of 100, due to poor sample matrix.

A Division of Underwriters Laboratories Inc.

REFERENCES AND DEFINITIONS OF TERMS

General Chemistry

References: 1. EPA-600/4-79-020
Methods for Chemical Analysis of Water and Wastes
2. Standard Methods For the Examination of Water and Wastewater
Vol. 19, 1995

MRL = EHL's Minimum Reporting Limit

Results: Values presented in the result column represent the lowest reportable value for a parameter after correcting for all sample dilutions.

< = "less than." This number is the lowest reportable value by the procedure used for analysis after factoring in all dilutions.

√ = If dilutions were required for quantitation of specific parameters, they are indicated by a (√) preceding the result.

1 ug/L = 1 microgram per liter (ug/L) = 1 part per billion

A Division of Underwriters Laboratories Inc.

ENERGY LABORATORIES, INC. • 2393 Salt Creek Highway (82601) • P.O. Box 3258 • Casper, WY 82602
Toll Free 888.235.0515 • 307.235.0515 • Fax 307.234.1639 • casper@energylab.com • www.energylab.com

LABORATORY ANALYTICAL REPORT

Client: Hall Environmental
Project: Not Indicated
Lab ID: C03110337-001
Client Sample ID: R-26 Pit 0311068-01D

Report Date: 12/04/03
Collection Date: 11/10/03 12:50
Date Received: 11/11/03
Matrix: Aqueous

Analyses	Result	Units	Qual	RL	MCL/ QCL	Method	Analysis Date / By
MAJOR IONS							
Calcium	10.1	mg/L		1.0		E200.7	11/12/03 18:33 / cp
Magnesium	2.2	mg/L		1.0		E200.7	11/12/03 18:33 / cp
Potassium	4.4	mg/L		1.0		E200.7	11/12/03 18:33 / cp
Sodium	69.4	mg/L		1.0		E200.7	11/12/03 18:33 / cp
METALS - DISSOLVED							
Aluminum	7.23	mg/L		0.001		E200.8	11/22/03 02:14 / smd
Antimony	0.004	mg/L		0.001		E200.8	11/22/03 02:14 / smd
Arsenic	0.031	mg/L	D	0.002		E200.8	11/22/03 02:14 / smd
Barium	0.100	mg/L		0.001		E200.8	11/22/03 02:14 / smd
Beryllium	ND	mg/L		0.001		E200.8	12/02/03 18:41 / smd
Cadmium	ND	mg/L		0.001		E200.8	11/22/03 02:14 / smd
Chromium	0.003	mg/L	D	0.002		E200.8	11/22/03 02:14 / smd
Cobalt	ND	mg/L		0.001		E200.8	11/22/03 02:14 / smd
Copper	0.029	mg/L		0.001		E200.8	11/22/03 02:14 / smd
Iron	1.08	mg/L		0.030		E200.7	11/12/03 18:33 / cp
Lead	0.011	mg/L		0.001		E200.8	11/22/03 02:14 / smd
Manganese	0.072	mg/L		0.001		E200.8	11/22/03 02:14 / smd
Mercury	0.001	mg/L		0.001		E200.8	11/22/03 02:14 / smd
Nickel	ND	mg/L		0.001		E200.8	11/22/03 02:14 / smd
Selenium	ND	mg/L	D	0.005		E200.8	11/22/03 02:14 / smd
Silver	0.009	mg/L		0.001		E200.8	11/22/03 02:14 / smd
Thallium	ND	mg/L		0.001		E200.8	11/22/03 02:14 / smd
Vanadium	0.005	mg/L		0.001		E200.8	11/22/03 02:14 / smd
Zinc	0.135	mg/L		0.001		E200.8	11/22/03 02:14 / smd
RADIONUCLIDES - TOTAL							
Gross Alpha	10.7	pCi/L		1.0		E900.0	11/17/03 09:00 / rs
Gross Alpha precision (±)	1.0	pCi/L				E900.0	11/17/03 09:00 / rs
Gross Gamma	ND	pCi/L		20.0		E901.1	11/13/03 09:38 / db
Tritium	ND	pCi/L		1200		E906.0	11/12/03 12:00 / db

Report Definitions:
RL - Analyte reporting limit.
QCL - Quality control limit.
D - RL increased due to sample matrix interference.
MCL - Maximum contaminant level.
ND - Not detected at the reporting limit.

TRACKING NO. PAGE NO.
I I0337R0001

ENERGY LABORATORIES, INC. • 2393 Salt Creek Highway (82601) • P.O. Box 3258 • Casper, WY 82602
Toll Free 888.235.0515 • 307.235.0515 • Fax 307.234.1639 • casper@energylab.com • www.energylab.com

QA/QC Summary Report

Client: Hall Environmental
Project: Not Indicated

Report Date: 12/04/03
Work Order: C03110337

Analyte	Result	Units	RL	%REC	Low Limit	High Limit	RPD	RPDLimit	Qual
Method: E200.7									Batch: 4581
Sample ID: C03110365-001CMS1	Matrix Spike								11/12/03 17:57
Calcium	766	mg/L	1.00	99.5	80	120			
Magnesium	528	mg/L	1.00	96.3	80	120			
Potassium	504	mg/L	1.00	94.8	80	120			
Sodium	541	mg/L	1.00	88.7	80	120			
Sample ID: C03110365-001CMSD1	Matrix Spike Duplicate								11/12/03 18:05
Calcium	763	mg/L	1.00	98.9	80	120	0.4	20	
Magnesium	528	mg/L	1.00	96.3	80	120	0	20	
Potassium	507	mg/L	1.00	95.4	80	120	0.6	20	
Sodium	543	mg/L	1.00	89.1	80	120	0.4	20	
Method: E200.8									Batch: 4581
Sample ID: C03110534-001BMS	Matrix Spike								11/21/03 23:09
Antimony	0.534	mg/L	0.00100	106	70	130			
Arsenic	0.456	mg/L	0.00200	91.2	70	130			
Barium	0.567	mg/L	0.00100	109	70	130			
Beryllium	0.383	mg/L	0.00100	75.7	70	130			
Cadmium	0.468	mg/L	0.00100	91.7	70	130			
Chromium	0.509	mg/L	0.00200	102	70	130			
Cobalt	0.548	mg/L	0.00100	99.3	70	130			
Copper	0.520	mg/L	0.00100	87.6	70	130			
Lead	0.530	mg/L	0.00100	106	70	130			
Mercury	0.0543	mg/L	0.00100	109	70	130			
Nickel	0.621	mg/L	0.00100	83.2	70	130			
Thallium	0.531	mg/L	0.00100	106	70	130			
Vanadium	0.536	mg/L	0.00100	106	70	130			
Sample ID: C03110534-001BMSD	Matrix Spike Duplicate								11/21/03 23:14
Antimony	0.516	mg/L	0.00100	103	70	130	3.4	20	
Arsenic	0.450	mg/L	0.00200	90	70	130	1.3	20	
Barium	0.562	mg/L	0.00100	108	70	130	0.9	20	
Beryllium	0.367	mg/L	0.00100	72.5	70	130	4.3	20	
Cadmium	0.455	mg/L	0.00100	89.2	70	130	2.8	20	
Chromium	0.511	mg/L	0.00200	102	70	130	0.4	20	
Cobalt	0.545	mg/L	0.00100	98.7	70	130	0.5	20	
Copper	0.504	mg/L	0.00100	84.4	70	130	3.1	20	
Lead	0.522	mg/L	0.00100	104	70	130	1.5	20	
Mercury	0.0551	mg/L	0.00100	110	70	130	1.5	20	
Nickel	0.597	mg/L	0.00100	78.4	70	130	4.0	20	
Thallium	0.522	mg/L	0.00100	104	70	130	1.7	20	
Vanadium	0.530	mg/L	0.00100	105	70	130	1.2	20	

Qualifiers: RL - Analyte reporting limit. ND - Not detected at the reporting limit.

TRACKING NO. PAGE NO.
110337R0002

ENERGY LABORATORIES, INC. • 2393 Salt Creek Highway (82601) • P.O. Box 3258 • Casper, WY 82602
Toll Free 888.235.0515 • 307.235.0515 • Fax 307.234.1639 • casper@energylab.com • www.energylab.com

QA/QC Summary Report

Client: Hall Environmental
Project: Not Indicated

Report Date: 12/04/03
Work Order: C03110337

Analyte	Result	Units	RL	%REC	Low Limit	High Limit	RPD	RPDLimit	Qual
Method: E900.0									Batch: R28843
Sample ID: C03110308-001A	Matrix Spike								11/17/03 09:00
Gross Alpha	445	pCi/L	1.00	91.6	70	130			
Sample ID: C03110308-001A	Matrix Spike Duplicate								11/17/03 09:00
Gross Alpha	419	pCi/L	1.00	86.3	70	130	5.9	30	
Sample ID: MB-R28843	Method Blank								11/17/03 09:00
Gross Alpha	ND	pCi/L	1.00						
Sample ID: LCS-R28843	Laboratory Control Spike								11/17/03 09:00
Gross Alpha	454	pCi/L	1.00	93.4	70	130			
Method: E901.1									Batch: R28507
Sample ID: LCS-R28507	Laboratory Control Spike								11/13/03 09:38
Gross Gamma	616000	pCi/L	20.0	95.4	70	130			
Sample ID: MB-R28507	Method Blank								11/13/03 09:38
Gross Gamma	ND	pCi/L	20.0						
Sample ID: C03110337-001ADUP	Sample Duplicate								11/13/03 09:38
Gross Gamma	ND	pCi/L	20.0				0	30	
Method: E906.0									Batch: R28499
Sample ID: C03110337-001BMS	Matrix Spike								11/12/03 12:00
Tritium	2000	pCi/L	1200	88.2	70	130			
Sample ID: C03110337-001BMSD	Matrix Spike Duplicate								11/12/03 12:00
Tritium	1900	pCi/L	1200	82.4	70	130	6.9	30	
Sample ID: MB-R28499	Method Blank								11/12/03 12:00
Tritium	ND	pCi/L	1200						

Qualifiers: RL - Analyte reporting limit. ND - Not detected at the reporting limit.

TRACKING NO. PAGE NO.
110337R0003

Hall Environmental Analysis Laboratory
4901 Hawkins NE, Suite D
Albuquerque, New Mexico 87109-
(505) 345-3975

CHAIN-OF-CUSTODY RECORD

Subcontractor:
Energy Labs
2393 Salt Creek Highway
Casper, WY 82601

TEL: (888) 235-0515
FAX: (307) 234-1639
Acct #:

Project Name:

10-Nov-03

Client Samp ID	LAB ID	Matrix	Collection Date	Bottle Type	Requested Tests E901.1	E906.9	SW9310
R-26 pit	0311068-01D	Aqueous	11/10/2003 12:50:00 PM	1LHDPEHNO3	1	1	1

4

Alpha, Beta, Gamma, Tritium Dissolved Metals (attached list)
Rush perchlorate Please filter an aliquot for metals

Comments: rush 10 day TAT. Please fax (505) 345-4107 results when completed, or email to lab@hallenvironmental.com. Thank you.

	Date/Time		Date/Time
Relinquished by: [signature]	11/10/03	Received by: Sara Hanson	11/11/03 1000
Relinquished by:		Received by:	C0310337

TRACKING NO. PAGE NO.
110337R0004

Report	T	Analyte	MDL	PQL	MCL
Y	A	Aluminum	0	0	0
Y	A	Antimony	0	0	0
Y	A	Arsenic	0	0	0
Y	A	Barium	0	0	0
Y	A	Beryllium	0	0	0
N	A	Bismuth	0	0	0
N	A	Boron	0	0	0
Y	A	Cadmium	0	0	0
Y	A	Calcium	0	0	0
Y	A	Chromium	0	0	0
Y	A	Cobalt	0	0	0
Y	A	Copper	0	0	0
Y	A	Iron	0	0	0
Y	A	Lead	0	0	0
N	A	Lithium	0	0	0
Y	A	Magnesium	0	0	0
Y	A	Manganese	0	0	0
Y	A	Mercury	0	0	0
N	A	Molybdenum	0	0	0
Y	A	Nickel	0	0	0
Y	A	Potassium	0	0	0
Y	A	Selenium	0	0	0
N	A	Silicon	0	0	0
Y	A	Silver	0	0	0
Y	A	Sodium	0	0	0
N	A	Strontium	0	0	0
Y	A	Thallium	0	0	0
N	A	Tin	0	0	0
N	A	Titanium	0	0	0
N	A	Uranium	0	0	0
Y	A	Vanadium	0	0	0
Y	A	Zinc	0	0	0

TRACKING NO. PAGE NO.

110337R0005

Energy Laboratories Inc.

Sample Receipt Checklist

Client Name: HLL-ENVRNMNTL-ALBQRQ

Date and Time Received: 11/11/2003 10:00:00

Work Order Number C03110337

Received by: . sh

Checklist completed by _____ 11/11/03
Signature | Date

Reviewed by _____
Initials | Date

Carrier name: UPS

Shipping container/cooler in good condition?	Yes ☑	No ☐	Not Present ☐
Custody seals intact on shipping container/cooler?	Yes ☑	No ☐	Not Present ☐
Custody seals intact on sample bottles?	Yes ☐	No ☐	Not Present ☑
Chain of custody present?	Yes ☑	No ☐	
Chain of custody signed when relinquished and received?	Yes ☑	No ☐	
Chain of custody agrees with sample labels?	Yes ☑	No ☐	
Samples in proper container/bottle?	Yes ☑	No ☐	
Sample containers intact?	Yes ☑	No ☐	
Sufficient sample volume for indicated test?	Yes ☑	No ☐	
All samples received within holding time?	Yes ☑	No ☐	
Container/Temp Blank temperature in compliance?	Yes ☑	No ☐	6 °C
Water - VOA vials have zero headspace?	Yes ☐	No ☐	No VOA vials submitted ☑
Water - pH acceptable upon receipt?	Yes ☑	No ☐	Not Applicable ☐

Adjusted? _____ Checked by _____

Any No and/or NA (not applicable) response must be detailed in the comments section below.

Client contacted: _____ Date contacted: _____ Person contacted _____

Contacted by: _____ Regarding: _____

Comments:
Sample split, filtered and preserved by lab. Per TAE per Anne Thorne 11-11-03 11:30 disregard perchlorate, she will send a new sample to another lab. Cancel G-Beta per Nancy McDuffie 11-11-03 11:34 per TAE.

Corrective Action _____

TRACKING NO. PAGE NO.
110337R0006

ENERGY LABORATORIES, INC. • 2393 Salt Creek Highway (82601) • P.O. Box 3258 • Casper, WY 82602
Toll Free 888.235.0515 • 307.235.0515 • Fax 307.234.1639 • casper@energylab.com • www.energylab.com

ANALYTICAL SUMMARY REPORT

December 04, 2003

Nancy McDuffie
Hall Environmental
4901 Hawkins NE
Ste D
Albuquerque, NM 87109

Workorder No.: C03110337

Project Name: Not Indicated

Energy Laboratories Inc. received the following 1 sample from Hall Environmental on 11/11/2003 for analysis.

Sample ID	Client Sample ID	Collect Date	Receive Date	Matrix	Test
C03110337-001	R-26 Pit 0311068-01D	11/10/03 12:50	11/11/03	Aqueous	Sample Filtering Metals by ICP, Dissolved Metals by ICP-MS, Dissolved Gross Alpha Gross Gamma Tritium in Water

There were no problems with the analyses and all data for associated QC met EPA or laboratory specifications except where noted in the Case Narrative or Report.

If you have any questions regarding these tests results, please call.

Report Approved By: R.A. Leaching
ROGER GARLING
LABORATORY SUPERVISOR

TRACKING NO. PAGE NO.
110337R0007

ENERGY LABORATORIES, INC. • 2393 Salt Creek Highway (82601) • P.O. Box 3258 • Casper, WY 82602
Toll Free 888.235.0515 • 307.235.0515 • Fax 307.234.1639 • casper@energylab.com • www.energylab.com

Date: *04-Dec-03*

CLIENT: Hall Environmental
Project: Not Indicated
Sample Delivery Group: C03110337

CASE NARRATIVE

THIS IS THE FINAL PAGE OF THE LABORATORY ANALYTICAL REPORT

BRANCH LABORATORY LOCATIONS
eli-b - Energy Laboratories, Inc. - Billings, MT
eli-cs - Energy Laboratories, Inc. - College Station, TX
eli-g - Energy Laboratories, Inc. - Gillette, WY
eli-h - Energy Laboratories, Inc. - Helena, MT
eli-r - Energy Laboratories, Inc. - Rapid City, SD

SUBCONTRACTING ANALYSIS
Subcontracting of sample analyses to an outside laboratory may be required. If so, ENERGY LABORATORIES will utilize its branch laboratories or qualified contract laboratories for this service. Any such laboratories will be indicated within the Laboratory Analytical Report.

SAMPLE TEMPERATURE COMPLIANCE: 4°C (±2°C)
Temperature of samples received may not be considered properly preserved by accepted standards. Samples that are hand delivered immediately after collection shall be considered acceptable if there is evidence that the chilling process has begun.

ENERGY LABORATORIES, INC. - CASPER,WY certifies that certain method selections contained in this report meet requirements as set forth by NELAC. Some client specific reporting requirements may not require NELAC reporting protocol.

ELI appreciates the opportunity to provide you with this analytical service. For additional information and services visit our web page www.energylab.com.

The total number of pages of this report are indicated by the last four digits of the tracking number located in the lower right corner.

Hall Environmental Analysis Laboratory

Date: *22-Dec-03*

CLIENT: Kleinfelder
Client Sample ID: R-26 cuttings
Lab Order: 0311068
Collection Date: 11/10/2003 12:50:00 PM
Project: R-26
Lab ID: 0311068-03
Matrix: SOIL

Analyses	Result	Limit	Qual	Units	DF	Date Analyzed
EPA METHOD 8082: PCB'S						Analyst: JMP
Aroclor 1016	ND	0.050		mg/Kg	1	12/4/2003 5:05:43 PM
Aroclor 1221	ND	0.25		mg/Kg	1	12/4/2003 5:05:43 PM
Aroclor 1232	ND	0.050		mg/Kg	1	12/4/2003 5:05:43 PM
Aroclor 1242	ND	0.050		mg/Kg	1	12/4/2003 5:05:43 PM
Aroclor 1248	ND	0.050		mg/Kg	1	12/4/2003 5:05:43 PM
Aroclor 1254	ND	0.050		mg/Kg	1	12/4/2003 5:05:43 PM
Aroclor 1260	ND	0.050		mg/Kg	1	12/4/2003 5:05:43 PM
Surr: Decachlorobiphenyl	87.4	50.1-115		%REC	1	12/4/2003 5:05:43 PM
EPA METHOD 8260B: VOLATILES						Analyst: BL
Benzene	ND	0.050		mg/Kg	1	11/13/2003
Toluene	ND	0.050		mg/Kg	1	11/13/2003
Ethylbenzene	ND	0.050		mg/Kg	1	11/13/2003
Methyl tert-butyl ether (MTBE)	ND	0.050		mg/Kg	1	11/13/2003
1,2,4-Trimethylbenzene	ND	0.050		mg/Kg	1	11/13/2003
1,3,5-Trimethylbenzene	ND	0.050		mg/Kg	1	11/13/2003
1,2-Dichloroethane (EDC)	ND	0.050		mg/Kg	1	11/13/2003
1,2-Dibromoethane (EDB)	ND	0.050		mg/Kg	1	11/13/2003
Naphthalene	ND	0.10		mg/Kg	1	11/13/2003
1-Methylnaphthalene	ND	0.20		mg/Kg	1	11/13/2003
2-Methylnaphthalene	ND	0.20		mg/Kg	1	11/13/2003
Acetone	ND	0.50		mg/Kg	1	11/13/2003
Bromobenzene	ND	0.050		mg/Kg	1	11/13/2003
Bromochloromethane	ND	0.050		mg/Kg	1	11/13/2003
Bromodichloromethane	ND	0.050		mg/Kg	1	11/13/2003
Bromoform	ND	0.050		mg/Kg	1	11/13/2003
Bromomethane	ND	0.10		mg/Kg	1	11/13/2003
2-Butanone	ND	0.50		mg/Kg	1	11/13/2003
Carbon disulfide	ND	0.50		mg/Kg	1	11/13/2003
Carbon tetrachloride	ND	0.050		mg/Kg	1	11/13/2003
Chlorobenzene	ND	0.050		mg/Kg	1	11/13/2003
Chloroethane	ND	0.10		mg/Kg	1	11/13/2003
Chloroform	ND	0.050		mg/Kg	1	11/13/2003
Chloromethane	ND	0.050		mg/Kg	1	11/13/2003
2-Chlorotoluene	ND	0.050		mg/Kg	1	11/13/2003
4-Chlorotoluene	ND	0.050		mg/Kg	1	11/13/2003
cis-1,2-DCE	ND	0.050		mg/Kg	1	11/13/2003
cis-1,3-Dichloropropene	ND	0.050		mg/Kg	1	11/13/2003
1,2-Dibromo-3-chloropropane	ND	0.10		mg/Kg	1	11/13/2003
Dibromochloromethane	ND	0.050		mg/Kg	1	11/13/2003
Dibromomethane	ND	0.10		mg/Kg	1	11/13/2003

Qualifiers:
ND - Not Detected at the Reporting Limit
J - Analyte detected below quantitation limits
B - Analyte detected in the associated Method Blank
* - Value exceeds Maximum Contaminant Level
S - Spike Recovery outside accepted recovery limits
R - RPD outside accepted recovery limits
E - Value above quantitation range

Hall Environmental Analysis Laboratory

Date: *22-Dec-03*

CLIENT: Kleinfelder
Client Sample ID: R-26 cuttings
Lab Order: 0311068
Collection Date: 11/10/2003 12:50:00 PM
Project: R-26
Lab ID: 0311068-03
Matrix: SOIL

Analyses	Result	Limit	Qual	Units	DF	Date Analyzed
1,2-Dichlorobenzene	ND	0.050		mg/Kg	1	11/13/2003
1,3-Dichlorobenzene	ND	0.050		mg/Kg	1	11/13/2003
1,4-Dichlorobenzene	ND	0.050		mg/Kg	1	11/13/2003
Dichlorodifluoromethane	ND	0.050		mg/Kg	1	11/13/2003
1,1-Dichloroethane	ND	0.050		mg/Kg	1	11/13/2003
1,1-Dichloroethene	ND	0.050		mg/Kg	1	11/13/2003
1,2-Dichloropropane	ND	0.050		mg/Kg	1	11/13/2003
1,3-Dichloropropane	ND	0.050		mg/Kg	1	11/13/2003
2,2-Dichloropropane	ND	0.050		mg/Kg	1	11/13/2003
1,1-Dichloropropene	ND	0.050		mg/Kg	1	11/13/2003
Hexachlorobutadiene	ND	0.050		mg/Kg	1	11/13/2003
2-Hexanone	ND	0.50		mg/Kg	1	11/13/2003
Isopropylbenzene	ND	0.050		mg/Kg	1	11/13/2003
4-Isopropyltoluene	ND	0.050		mg/Kg	1	11/13/2003
4-Methyl-2-pentanone	ND	0.50		mg/Kg	1	11/13/2003
Methylene chloride	ND	0.15		mg/Kg	1	11/13/2003
n-Butylbenzene	ND	0.050		mg/Kg	1	11/13/2003
n-Propylbenzene	ND	0.050		mg/Kg	1	11/13/2003
sec-Butylbenzene	ND	0.050		mg/Kg	1	11/13/2003
Styrene	ND	0.050		mg/Kg	1	11/13/2003
tert-Butylbenzene	ND	0.050		mg/Kg	1	11/13/2003
1,1,1,2-Tetrachloroethane	ND	0.050		mg/Kg	1	11/13/2003
1,1,2,2-Tetrachloroethane	ND	0.050		mg/Kg	1	11/13/2003
Tetrachloroethene (PCE)	ND	0.050		mg/Kg	1	11/13/2003
trans-1,2-DCE	ND	0.050		mg/Kg	1	11/13/2003
trans-1,3-Dichloropropene	ND	0.050		mg/Kg	1	11/13/2003
1,2,3-Trichlorobenzene	ND	0.050		mg/Kg	1	11/13/2003
1,2,4-Trichlorobenzene	ND	0.050		mg/Kg	1	11/13/2003
1,1,1-Trichloroethane	ND	0.050		mg/Kg	1	11/13/2003
1,1,2-Trichloroethane	ND	0.050		mg/Kg	1	11/13/2003
Trichloroethene (TCE)	ND	0.050		mg/Kg	1	11/13/2003
Trichlorofluoromethane	ND	0.050		mg/Kg	1	11/13/2003
1,2,3-Trichloropropane	ND	0.10		mg/Kg	1	11/13/2003
Vinyl chloride	ND	0.10		mg/Kg	1	11/13/2003
Xylenes, Total	ND	0.050		mg/Kg	1	11/13/2003
Surr: 1,2-Dichloroethane-d4	111	68.4-123		%REC	1	11/13/2003
Surr: 4-Bromofluorobenzene	93.8	70-119		%REC	1	11/13/2003
Surr: Dibromofluoromethane	98.3	76.8-123		%REC	1	11/13/2003
Surr: Toluene-d8	111	85.2-123		%REC	1	11/13/2003
EPA METHOD 8270D: SEMIVOLATILES						Analyst: **CS**
Acenaphthene	ND	0.20		mg/Kg	1	11/21/2003
Acenaphthylene	ND	0.20		mg/Kg	1	11/21/2003

Qualifiers:
ND - Not Detected at the Reporting Limit
J - Analyte detected below quantitation limits
B - Analyte detected in the associated Method Blank
* - Value exceeds Maximum Contaminant Level
S - Spike Recovery outside accepted recovery limits
R - RPD outside accepted recovery limits
E - Value above quantitation range

Hall Environmental Analysis Laboratory

Date: *22-Dec-03*

CLIENT: Kleinfelder
Client Sample ID: R-26 cuttings
Lab Order: 0311068
Collection Date: 11/10/2003 12:50:00 PM
Project: R-26
Lab ID: 0311068-03
Matrix: SOIL

Analyses	Result	Limit	Qual	Units	DF	Date Analyzed
Aniline	ND	0.20		mg/Kg	1	11/21/2003
Anthracene	ND	0.20		mg/Kg	1	11/21/2003
Azobenzene	ND	0.20		mg/Kg	1	11/21/2003
Benz(a)anthracene	ND	0.20		mg/Kg	1	11/21/2003
Benzidine	ND	0.20		mg/Kg	1	11/21/2003
Benzo(a)pyrene	ND	0.20		mg/Kg	1	11/21/2003
Benzo(b)fluoranthene	ND	0.20		mg/Kg	1	11/21/2003
Benzo(g,h,i)perylene	ND	0.20		mg/Kg	1	11/21/2003
Benzo(k)fluoranthene	ND	0.20		mg/Kg	1	11/21/2003
Benzoic acid	ND	0.50		mg/Kg	1	11/21/2003
Benzyl alcohol	ND	0.20		mg/Kg	1	11/21/2003
Bis(2-chloroethoxy)methane	ND	0.20		mg/Kg	1	11/21/2003
Bis(2-chloroethyl)ether	ND	0.20		mg/Kg	1	11/21/2003
Bis(2-chloroisopropyl)ether	ND	0.20		mg/Kg	1	11/21/2003
Bis(2-ethylhexyl)phthalate	ND	0.20		mg/Kg	1	11/21/2003
4-Bromophenyl phenyl ether	ND	0.20		mg/Kg	1	11/21/2003
Butyl benzyl phthalate	ND	0.20		mg/Kg	1	11/21/2003
Carbazole	ND	0.20		mg/Kg	1	11/21/2003
4-Chloro-3-methylphenol	ND	0.20		mg/Kg	1	11/21/2003
4-Chloroaniline	ND	0.20		mg/Kg	1	11/21/2003
2-Chloronaphthalene	ND	0.20		mg/Kg	1	11/21/2003
2-Chlorophenol	ND	0.20		mg/Kg	1	11/21/2003
4-Chlorophenyl phenyl ether	ND	0.20		mg/Kg	1	11/21/2003
Chrysene	ND	0.20		mg/Kg	1	11/21/2003
Di-n-butyl phthalate	0.25	0.20	B	mg/Kg	1	11/21/2003
Di-n-octyl phthalate	ND	0.20		mg/Kg	1	11/21/2003
Dibenz(a,h)anthracene	ND	0.20		mg/Kg	1	11/21/2003
Dibenzofuran	ND	0.20		mg/Kg	1	11/21/2003
1,2-Dichlorobenzene	ND	0.20		mg/Kg	1	11/21/2003
1,3-Dichlorobenzene	ND	0.20		mg/Kg	1	11/21/2003
1,4-Dichlorobenzene	ND	0.20		mg/Kg	1	11/21/2003
3,3'-Dichlorobenzidine	ND	0.20		mg/Kg	1	11/21/2003
Diethyl phthalate	ND	0.20		mg/Kg	1	11/21/2003
Dimethyl phthalate	ND	0.20		mg/Kg	1	11/21/2003
2,4-Dichlorophenol	ND	0.20		mg/Kg	1	11/21/2003
2,4-Dimethylphenol	ND	0.20		mg/Kg	1	11/21/2003
4,6-Dinitro-2-methylphenol	ND	0.50		mg/Kg	1	11/21/2003
2,4-Dinitrophenol	ND	0.50		mg/Kg	1	11/21/2003
2,4-Dinitrotoluene	ND	0.20		mg/Kg	1	11/21/2003
2,6-Dinitrotoluene	ND	0.20		mg/Kg	1	11/21/2003
Fluoranthene	ND	0.20		mg/Kg	1	11/21/2003
Fluorene	ND	0.20		mg/Kg	1	11/21/2003

Qualifiers:

ND - Not Detected at the Reporting Limit
J - Analyte detected below quantitation limits
B - Analyte detected in the associated Method Blank
* - Value exceeds Maximum Contaminant Level
S - Spike Recovery outside accepted recovery limits
R - RPD outside accepted recovery limits
E - Value above quantitation range

Hall Environmental Analysis Laboratory

Date: *22-Dec-03*

CLIENT: Kleinfelder
Client Sample ID: R-26 cuttings
Lab Order: 0311068
Collection Date: 11/10/2003 12:50:00 PM
Project: R-26
Lab ID: 0311068-03
Matrix: SOIL

Analyses	Result	Limit	Qual	Units	DF	Date Analyzed
Hexachlorobenzene	ND	0.20		mg/Kg	1	11/21/2003
Hexachlorobutadiene	ND	0.20		mg/Kg	1	11/21/2003
Hexachlorocyclopentadiene	ND	0.20		mg/Kg	1	11/21/2003
Hexachloroethane	ND	0.20		mg/Kg	1	11/21/2003
Indeno(1,2,3-cd)pyrene	ND	0.20		mg/Kg	1	11/21/2003
Isophorone	ND	0.20		mg/Kg	1	11/21/2003
2-Methylnaphthalene	ND	0.20		mg/Kg	1	11/21/2003
2-Methylphenol	ND	0.20		mg/Kg	1	11/21/2003
3+4-Methylphenol	ND	0.20		mg/Kg	1	11/21/2003
N-Nitrosodi-n-propylamine	ND	0.20		mg/Kg	1	11/21/2003
N-Nitrosodiphenylamine	ND	0.20		mg/Kg	1	11/21/2003
Naphthalene	ND	0.20		mg/Kg	1	11/21/2003
2-Nitroaniline	ND	0.50		mg/Kg	1	11/21/2003
3-Nitroaniline	ND	0.50		mg/Kg	1	11/21/2003
4-Nitroaniline	ND	0.20		mg/Kg	1	11/21/2003
Nitrobenzene	ND	0.20		mg/Kg	1	11/21/2003
2-Nitrophenol	ND	0.20		mg/Kg	1	11/21/2003
4-Nitrophenol	ND	0.20		mg/Kg	1	11/21/2003
Pentachlorophenol	ND	0.50		mg/Kg	1	11/21/2003
Phenanthrene	ND	0.20		mg/Kg	1	11/21/2003
Phenol	ND	0.20		mg/Kg	1	11/21/2003
Pyrene	ND	0.20		mg/Kg	1	11/21/2003
Pyridine	ND	0.50		mg/Kg	1	11/21/2003
1,2,4-Trichlorobenzene	ND	0.20		mg/Kg	1	11/21/2003
2,4,5-Trichlorophenol	ND	0.20		mg/Kg	1	11/21/2003
2,4,6-Trichlorophenol	ND	0.20		mg/Kg	1	11/21/2003
Surr: 2,4,6-Tribromophenol	75.9	26-156		%REC	1	11/21/2003
Surr: 2-Fluorobiphenyl	82.5	23.6-111		%REC	1	11/21/2003
Surr: 2-Fluorophenol	67.4	21.5-107		%REC	1	11/21/2003
Surr: 4-Terphenyl-d14	98.3	30-220		%REC	1	11/21/2003
Surr: Nitrobenzene-d5	70.3	25.3-115		%REC	1	11/21/2003
Surr: Phenol-d6	79.0	25.2-115		%REC	1	11/21/2003
MERCURY, TCLP LEACHED						Analyst: **MAP**
Mercury	ND	0.020		mg/L	1	11/21/2003
EPA METHOD 6010C: TCLP METALS						Analyst: **NMO**
Arsenic	ND	5.0		mg/L	1	11/21/2003 11:14:44 AM
Barium	ND	100		mg/L	1	11/21/2003 11:14:44 AM
Cadmium	ND	1.0		mg/L	1	11/21/2003 11:14:44 AM
Chromium	ND	5.0		mg/L	1	11/21/2003 11:14:44 AM
Lead	ND	5.0		mg/L	1	11/21/2003 11:14:44 AM
Selenium	ND	1.0		mg/L	1	11/21/2003 11:14:44 AM

Qualifiers:
ND - Not Detected at the Reporting Limit
J - Analyte detected below quantitation limits
B - Analyte detected in the associated Method Blank
* - Value exceeds Maximum Contaminant Level
S - Spike Recovery outside accepted recovery limits
R - RPD outside accepted recovery limits
E - Value above quantitation range

Hall Environmental Analysis Laboratory

Date: *22-Dec-03*

CLIENT:	Kleinfelder	**Client Sample ID:**	R-26 cuttings
Lab Order:	0311068	**Collection Date:**	11/10/2003 12:50:00 PM
Project:	R-26		
Lab ID:	0311068-03	**Matrix:**	SOIL

Analyses	Result	Limit	Qual	Units	DF	Date Analyzed
Silver	ND	5.0		mg/L	1	11/21/2003 11:14:44 AM

Qualifiers:

ND - Not Detected at the Reporting Limit

J - Analyte detected below quantitation limits

B - Analyte detected in the associated Method Blank

* - Value exceeds Maximum Contaminant Level

S - Spike Recovery outside accepted recovery limits

R - RPD outside accepted recovery limits

E - Value above quantitation range

GENERAL ENGINEERING LABORATORIES, LLC
2040 Savage Road Charleston SC 29407 - (843) 556-8171 - www.gel.com

Certificate of Analysis

Company : Hall Environmental Analysis Labs
Address : 4901 Hawkins Ne
Suite D
Albuquerque, New Mexico 87109
Contact: Nancy McDuffie
Project: Hall Environmental

Report Date: December 18, 2003

Client Sample ID: R-26 Cuttings (Chemistry)
Sample ID: 102538001
Matrix: Soil
Collect Date: 10-NOV-03 12:50
Receive Date: 24-NOV-03
Collector: Client
Moisture: 3.46%

Project: HALL00103
Client ID: HALL001

Parameter	Qualifier	Result	DL	RL	Units	DF	Analyst	Date	Time	Batch	Method
HPLC Explosives											
8330 EXPLO. Std list Soil											
1,3,5-Trinitrobenzene	Uh	ND	29.0	80.0	ug/kg	1	MAP	12/02/03	1937	293844	1
2,4,6-Trinitrotoluene	Uh	ND	48.0	80.0	ug/kg	1					
2,4-Dinitrotoluene	Uh	ND	55.0	80.0	ug/kg	1					
2,6-Dinitrotoluene	Uh	ND	48.0	80.0	ug/kg	1					
2-Amino-4,6-dinitrotoluene	Uh	ND	18.1	80.0	ug/kg	1					
4-Amino-2,6-dinitrotoluene	Uh	ND	34.1	80.0	ug/kg	1					
HMX	Uh	ND	48.0	80.0	ug/kg	1					
Nitrobenzene	Uh	ND	48.0	80.0	ug/kg	1					
RDX	Uh	ND	48.0	80.0	ug/kg	1					
Tetryl	Uh	ND	22.1	80.0	ug/kg	1					
m-Dinitrobenzene	Uh	ND	34.1	80.0	ug/kg	1					
m-Nitrotoluene	Uh	ND	24.0	80.0	ug/kg	1					
o-Nitrotoluene	Uh	ND	24.0	80.0	ug/kg	1					
p-Nitrotoluene	Uh	ND	24.0	80.0	ug/kg	1					
Mercury Analysis-CVAA											
7471 Cold Vapor Hg in Solid											
Mercury	J	9.75	0.992	10.1	ug/kg	1	NOR1	12/01/03	1118	293699	2
Metals Analysis-ICP											
6010/3050 ICP SCAN Metals Soil											
Aluminum		5930000	822	10400	ug/kg	2	RMJ	12/03/03	2104	293758	3
Antimony	U	ND	356	1040	ug/kg	2					
Arsenic		2640	214	518	ug/kg	2					
Barium		70500	69.1	518	ug/kg	2					
Beryllium	J	460	51.8	518	ug/kg	2					
Cadmium	U	ND	49.5	518	ug/kg	2					
Calcium		2700000	1350	10400	ug/kg	2					
Chromium		5660	167	518	ug/kg	2					
Cobalt		2370	82.7	518	ug/kg	2					
Copper		7720	210	518	ug/kg	2					
Iron		7650000	1620	10400	ug/kg	2					
Lead		38000	294	518	ug/kg	2					
Magnesium		776000	606	10400	ug/kg	2					
Manganese		295000	135	1040	ug/kg	2					
Nickel		5490	88.5	518	ug/kg	2					
Potassium		515000	3700	10400	ug/kg	2					
Selenium	J	471	168	518	ug/kg	2					

GENERAL ENGINEERING LABORATORIES, LLC
2040 Savage Road Charleston SC 29407 - (843) 556-8171 - www.gel.com

Certificate of Analysis

Company : Hall Environmental Analysis Labs
Address : 4901 Hawkins Ne
Suite D
Albuquerque, New Mexico 87109
Contact: Nancy McDuffie
Project: Hall Environmental

Report Date: December 18, 2003

Client Sample ID: R-26 Cuttings (Chemistry) Project: HALL00103
Sample ID: 102538001 Client ID: HALL001

Parameter	Qualifier	Result	DL	RL	Units	DF	AnalystDate	Time	Batch	Method
Metals Analysis-ICP										
6010/3050 ICP SCAN Metals Soil										
Silver	U	ND	93.4	518	ug/kg	2				
Sodium		441000	3760	10400	ug/kg	2				
Thallium	U	ND	1040	2070	ug/kg	2				
Vanadium		9820	94.1	518	ug/kg	2				
Zinc		27100	174	518	ug/kg	2				

The following Prep Methods were performed

Method	Description	Analyst	Date	Time	Prep Batch
SW846 3050B	846 3050BS PREP	CQH1	12/02/03	1623	293757
SW846 7471A Prep	EPA 7471A Mercury Prep Soil	ETL	11/26/03	1115	293697
SW846 8330 PREP	8330 EXPLOSIVES BY HPLC Prep in soil	HMF1	12/01/03	1200	293843

The following Analytical Methods were performed

Method	Description	Analyst Comments
1	SW846 8330	
2	SW846 7471A	
3	SW846 3050B/6010B	

Surrogate/Tracer recovery	Test	Recovery%	Acceptable Limits
1,2-dinitrobenzene	8330 EXPLO. Std list Soil	83	(76%-114%)

Notes:
The Qualifiers in this report are defined as follows :

< Result is less than amount reported.
> Result is greater than amount reported.
B Target analyte was detected in the sample as well as the associated blank.
BD Flag for results below the MDC or a flag for low tracer recovery.
E Concentration of the target analyte exceeds the instrument calibration range.
H Analytical holding time exceeded.
J Indicates an estimated value. The result was greater than the detection limit, but less than the reporting limit.
P The response between the confirmation column and the primary column is >40%D.
U Indicates the target analyte was analyzed for but not detected above the detection limit.
UI Uncertain identification for gamma spectroscopy.
X Lab-specific qualifier-please see case narrative, data summary package or contact your project manager for details.
Y QC Samples were not spiked with this compound.
h Sample preparation or preservation holding time exceeded.

The above sample is reported on a dry weight basis except where prohibited by the analytical procedure.

GENERAL ENGINEERING LABORATORIES, LLC
2040 Savage Road Charleston SC 29407 - (843) 556-8171 - www.gel.com

Certificate of Analysis

Company : Hall Environmental Analysis Labs
Address : 4901 Hawkins Ne
Suite D
Albuquerque, New Mexico 87109
Contact: Nancy McDuffie
Project: Hall Environmental

Report Date: December 18, 2003

Client Sample ID: R-26 Cuttings (Chemistry)
Sample ID: 102538001

Project: HALL00103
Client ID: HALL001

Parameter	Qualifier	Result	DL	RL	Units	DF	AnalystDate	Time	Batch	Method

Where the analytical method has been performed under NELAP certification, the analysis has met all of the requirements of the NELAC standard unless qualified on the Certificate of Analysis.

This data report has been prepared and reviewed in accordance with General Engineering Laboratories, LLC standard operating procedures. Please direct any questions to your Project Manager, Amy Jamison.

Reviewed by

GENERAL ENGINEERING LABORATORIES, LLC

2040 Savage Road Charleston SC 29407 - (843) 556-8171 - www.gel.com

Certificate of Analysis

Company : Hall Environmental Analysis Labs
Address : 4901 Hawkins Ne
Suite D
Albuquerque, New Mexico 87109
Contact: Nancy McDuffie
Project: Hall Environmental

Report Date: December 18, 2003

Client Sample ID: R-26 Cuttings (Radiochemistry)
Sample ID: 102538002
Matrix: Soil
Collect Date: 10-NOV-03 12:50
Receive Date: 24-NOV-03
Collector: Client

Project: HALL00103
Client ID: HALL001

Parameter	Qualifier	Result		DL	RL	Units	DF	Analyst	Date	Time	Batch	Method
Rad Alpha Spec Analysis												
Alphaspec Am241 Solid												
Americium-241	U	ND	+/-0.136	0.264	1.00	pCi/g		MLA	12/16/03	1205	296051	1
Alphaspec Pu, Solid												
Plutonium-238	U	ND	+/-2.00	0.0805	1.00	pCi/g		MLA	12/16/03	1224	296052	2
Plutonium-239/240	U	ND	+/-0.0129	0.141	1.00	pCi/g						
Alphaspec Th, Solid												
Thorium-232		1.84	+/-0.759	0.207	1.00	pCi/g		MLA	12/16/03	1158	296055	3
Alphaspec U, Solid												
Uranium-233/234		0.957	+/-0.406	0.263	1.00	pCi/g		MLA	12/16/03	1226	296053	4
Uranium-235/236	U	ND	+/-0.0803	0.236	1.00	pCi/g						
Uranium-238		0.786	+/-0.361	0.200	1.00	pCi/g						
Rad Gamma Spec Analysis												
Gammaspec, Gamma, Solid Cs137												
Cesium-137	U	ND	+/-0.029	0.0396	0.100	pCi/g		SRB	12/08/03	1914	295765	5
Rad Gas Flow Proportional Counting												
GFPC, Sr90, solid												
Strontium-90	U	ND	+/-0.241	0.502	2.00	pCi/g		JAS1	12/05/03	1710	293858	6
Rad Liquid Scintillation Analysis												
LSC, Tritium Dist, Solid												
Tritium		3.89	+/-2.22	3.42	6.00	pCi/g		CTO1	12/12/03	1043	296153	7

The following Prep Methods were performed

Method	Description	Analyst	Date	Time	Prep Batch
Ash Soil Prep	Ash Soil Prep, GL-RAD-A-021B	AWB	11/26/03	0728	293729
Dry Soil Prep	Dry Soil Prep GL-RAD-A-021	AWB	11/25/03	1249	293727

The following Analytical Methods were performed

Method	Description	Analyst Comments
1	DOE EML HASL-300, Am-05-RC Modified	
2	DOE EML HASL-300, Pu-11-RC Modified	
3	DOE EML HASL-300, Th-01-RC Modified	
4	DOE EML HASL-300, U-02-RC Modified	
5	EML HASL 300, 4.5.2.3	
6	EPA 905.0 Modified	

GENERAL ENGINEERING LABORATORIES, LLC
2040 Savage Road Charleston SC 29407 - (843) 556-8171 - www.gel.com

Certificate of Analysis

Company : Hall Environmental Analysis Labs
Address : 4901 Hawkins Ne
Suite D
Albuquerque, New Mexico 87109
Contact: Nancy McDuffie
Project: Hall Environmental

Report Date: December 18, 2003

Client Sample ID: R-26 Cuttings (Radiochemistry) Project: HALL00103
Sample ID: 102538002 Client ID: HALL001

Parameter	Qualifier	Result	DL	RL	Units	DF	AnalystDate	Time	Batch	Method
7	EPA 906.0 Modified									

Notes:
The Qualifiers in this report are defined as follows :

< Result is less than amount reported.
> Result is greater than amount reported.
B Target analyte was detected in the sample as well as the associated blank.
BD Flag for results below the MDC or a flag for low tracer recovery.
E Concentration of the target analyte exceeds the instrument calibration range.
H Analytical holding time exceeded.
J Indicates an estimated value. The result was greater than the detection limit, but less than the reporting limit.
P The response between the confirmation column and the primary column is >40%D.
U Indicates the target analyte was analyzed for but not detected above the detection limit.
UI Uncertain identification for gamma spectroscopy.
X Lab-specific qualifier-please see case narrative, data summary package or contact your project manager for details.
Y QC Samples were not spiked with this compound.
h Sample preparation or preservation holding time exceeded.

The above sample is reported on a dry weight basis except where prohibited by the analytical procedure.
Where the analytical method has been performed under NELAP certification, the analysis has met all of the requirements of the NELAC standard unless qualified on the Certificate of Analysis.

This data report has been prepared and reviewed in accordance with General Engineering Laboratories, LLC standard operating procedures. Please direct any questions to your Project Manager, Amy Jamison.

Reviewed by

GENERAL ENGINEERING LABORATORIES, LLC
2040 Savage Road Charleston, SC 29407 - (843) 556-8171 - www.gel.com

QC Summary

Report Date: December 18, 2003

Client : Hall Environmental Analysis Labs
4901 Hawkins Ne
Suite D
Albuquerque, New Mexico
Contact: Nancy McDuffie

Workorder: 102538

Parmname	NOM	Sample	Qual	QC	Units	RPD%	REC%	Range	Anlst	Date Time
HPLC-Explosives										
Batch 293844										
QC1200531987 LCS										
1,3,5-Trinitrobenzene	800			846	ug/kg		106	(57%-130%)	MAP	12/02/03 18:55
2,4,6-Trinitrotoluene	800			849	ug/kg		106	(61%-130%)		
2,4-Dinitrotoluene	800			841	ug/kg		105	(56%-127%)		
2,6-Dinitrotoluene	800			852	ug/kg		106	(57%-131%)		
2-Amino-4,6-dinitrotoluene	800			855	ug/kg		107	(57%-133%)		
4-Amino-2,6-dinitrotoluene	800			746	ug/kg		93	(57%-119%)		
HMX	800			888	ug/kg		111	(61%-138%)		
Nitrobenzene	800			784	ug/kg		98	(55%-124%)		
RDX	800			873	ug/kg		109	(62%-134%)		
Tetryl	800			701	ug/kg		88	(48%-122%)		
m-Dinitrobenzene	800			847	ug/kg		106	(78%-110%)		
m-Nitrotoluene	800			759	ug/kg		95	(55%-124%)		
o-Nitrotoluene	800			911	ug/kg		114*	(72%-109%)		
p-Nitrotoluene	800			775	ug/kg		97	(55%-126%)		
**1,2-dinitrobenzene	400			374	ug/kg		94	(76%-114%)		
QC1200531986 MB										
1,3,5-Trinitrobenzene			U	ND	ug/kg					12/02/03 18:12
2,4,6-Trinitrotoluene			U	ND	ug/kg					
2,4-Dinitrotoluene			U	ND	ug/kg					
2,6-Dinitrotoluene			U	ND	ug/kg					
2-Amino-4,6-dinitrotoluene			U	ND	ug/kg					
4-Amino-2,6-dinitrotoluene			U	ND	ug/kg					
HMX			U	ND	ug/kg					
Nitrobenzene			U	ND	ug/kg					
RDX			U	ND	ug/kg					
Tetryl			U	ND	ug/kg					
m-Dinitrobenzene			U	ND	ug/kg					
m-Nitrotoluene			U	ND	ug/kg					
o-Nitrotoluene			U	ND	ug/kg					
p-Nitrotoluene			U	ND	ug/kg					
**1,2-dinitrobenzene	400			336	ug/kg		84	(76%-114%)		
QC1200531988 102538001 MS										
1,3,5-Trinitrobenzene	800	Uh	ND	h 742	ug/kg		93	(80%-118%)		12/02/03 20:20
2,4,6-Trinitrotoluene	800	Uh	ND	h 777	ug/kg		97	(73%-133%)		
2,4-Dinitrotoluene	800	Uh	ND	h 766	ug/kg		96	(75%-118%)		
2,6-Dinitrotoluene	800	Uh	ND	h 823	ug/kg		103	(75%-130%)		
2-Amino-4,6-dinitrotoluene	800	Uh	ND	h 693	ug/kg		87	(67%-124%)		
4-Amino-2,6-dinitrotoluene	800	Uh	ND	h 387	ug/kg		48	(43%-126%)		
HMX	800	Uh	ND	h 812	ug/kg		101	(74%-131%)		
Nitrobenzene	800	Uh	ND	h 739	ug/kg		92	(72%-115%)		
RDX	800	Uh	ND	h 767	ug/kg		96	(68%-125%)		
Tetryl	800	Uh	ND	h 306	ug/kg		38*	(50%-116%)		

QC Summary

Workorder: 102538

Parmname	NOM		Sample	Qual	QC	Units	RPD%	REC%	Range	Anlst	Date Time
HPLC-Explosives											
Batch 293844											
m-Dinitrobenzene	800	Uh	ND	h	778	ug/kg		97	(80%-118%)		
m-Nitrotoluene	800	Uh	ND	h	689	ug/kg		86	(74%-115%)		
o-Nitrotoluene	800	Uh	ND	h	728	ug/kg		91	(74%-115%)		
p-Nitrotoluene	800	Uh	ND	h	705	ug/kg		88	(74%-116%)		
**1,2-dinitrobenzene	400		330		328	ug/kg		82	(76%-114%)		
QC1200531989 102538001 MSD											
1,3,5-Trinitrobenzene	800	Uh	ND	h	667	ug/kg	11	83	(0%-30%)		12/02/03 21:02
2,4,6-Trinitrotoluene	800	Uh	ND	h	735	ug/kg	6	92	(0%-30%)		
2,4-Dinitrotoluene	800	Uh	ND	h	737	ug/kg	4	92	(0%-30%)		
2,6-Dinitrotoluene	800	Uh	ND	h	780	ug/kg	5	98	(0%-30%)		
2-Amino-4,6-dinitrotoluene	800	Uh	ND	h	667	ug/kg	4	83	(0%-30%)		
4-Amino-2,6-dinitrotoluene	800	Uh	ND	h	370	ug/kg	5	46	(0%-30%)		
HMX	800	Uh	ND	h	782	ug/kg	4	98	(0%-30%)		
Nitrobenzene	800	Uh	ND	h	707	ug/kg	4	88	(0%-30%)		
RDX	800	Uh	ND	h	745	ug/kg	3	93	(0%-30%)		
Tetryl	800	Uh	ND	h	117	ug/kg	90*	15*	(0%-30%)		
m-Dinitrobenzene	800	Uh	ND	h	749	ug/kg	4	94	(0%-30%)		
m-Nitrotoluene	800	Uh	ND	h	652	ug/kg	6	82	(0%-30%)		
o-Nitrotoluene	800	Uh	ND	h	725	ug/kg	0	91	(0%-30%)		
p-Nitrotoluene	800	Uh	ND	h	673	ug/kg	5	84	(0%-30%)		
**1,2-dinitrobenzene	400		330		301	ug/kg		75*	(76%-114%)		
Metals Analysis-ICP											
Batch 293758											
QC1200531726 102538001 DUP											
Aluminum			5930000		6600000	ug/kg	11		(0%-20%)	RMJ	12/03/03 21:19
Antimony		U	ND	U	ND	ug/kg	N/A		(+/-996)		
Arsenic			2640		2780	ug/kg	5		(0%-20%)		
Barium			70500		79100	ug/kg	11		(0%-20%)		
Beryllium		J	460		525	ug/kg	N/A ^		(+/-498)		
Cadmium		U	ND	U	ND	ug/kg	N/A		(+/-498)		
Calcium			2700000		2900000	ug/kg	7		(0%-20%)		
Chromium			5660		5900	ug/kg	4		(0%-20%)		
Cobalt			2370		2610	ug/kg	10		(0%-20%)		
Copper			7720		8270	ug/kg	7		(0%-20%)		
Iron			7650000		8360000	ug/kg	9		(0%-20%)		
Lead			38000		32200	ug/kg	17		(0%-20%)		
Magnesium			776000		820000	ug/kg	6		(0%-20%)		
Manganese			295000		288000	ug/kg	2		(0%-20%)		
Nickel			5490		5470	ug/kg	0		(0%-20%)		
Potassium			515000		559000	ug/kg	8		(0%-20%)		
Selenium		J	471	J	401	ug/kg	N/A ^		(+/-498)		
Silver		U	ND	U	ND	ug/kg	N/A		(+/-498)		
Sodium			441000		444000	ug/kg	1		(0%-20%)		
Thallium		U	ND	U	ND	ug/kg	N/A		(+/-1990)		
Vanadium			9820		10300	ug/kg	5		(0%-20%)		
Zinc			27100		31000	ug/kg	13		(0%-20%)		
QC1200531730 LCS											
Aluminum	6640000				6030000	ug/kg		91	(44%-157%)		12/03/03 20:58

QC Summary

Workorder: 102538

Parmname		NOM	Sample	Qual	QC	Units	RPD%	REC%	Range	Anlst	Date Time
Metals Analysis-ICP											
Batch 293758											
Antimony		78900			32900	ug/kg		42	(1%-205%)		
Arsenic		197000			199000	ug/kg		101	(79%-121%)		
Barium		392000			388000	ug/kg		99	(80%-120%)		
Beryllium		75700			76300	ug/kg		101	(81%-119%)		
Cadmium		69100			68600	ug/kg		99	(81%-120%)		
Calcium		3380000			3620000	ug/kg		107	(76%-124%)		
Chromium		82600			78900	ug/kg		96	(77%-123%)		
Cobalt		81500			81500	ug/kg		100	(85%-115%)		
Copper		127000			127000	ug/kg		100	(80%-120%)		
Iron		12200000			10100000	ug/kg		83	(47%-153%)		
Lead		95000			95900	ug/kg		101	(77%-123%)		
Magnesium		2050000			2030000	ug/kg		99	(71%-129%)		
Manganese		452000			458000	ug/kg		101	(76%-124%)		
Nickel		85700			86500	ug/kg		101	(74%-121%)		
Potassium		1910000			1820000	ug/kg		95	(64%-136%)		
Selenium		117000			118000	ug/kg		100	(74%-126%)		
Silver		141000			164000	ug/kg		117	(45%-155%)		
Sodium		352000			303000	ug/kg		86	(51%-149%)		
Thallium		103000			104000	ug/kg		101	(71%-128%)		
Vanadium		158000			147000	ug/kg		93	(70%-129%)		
Zinc		275000			273000	ug/kg		99	(77%-123%)		
QC1200531725	MB										
Aluminum				J	1130	ug/kg					12/03/03 20:51
Antimony				U	ND	ug/kg					
Arsenic				U	ND	ug/kg					
Barium				U	ND	ug/kg					
Beryllium				U	ND	ug/kg					
Cadmium				U	ND	ug/kg					
Calcium				J	2360	ug/kg					
Chromium				U	ND	ug/kg					
Cobalt				U	ND	ug/kg					
Copper				U	ND	ug/kg					
Iron				U	ND	ug/kg					
Lead				U	ND	ug/kg					
Magnesium				U	ND	ug/kg					
Manganese				U	ND	ug/kg					
Nickel				U	ND	ug/kg					
Potassium				U	ND	ug/kg					
Selenium				U	ND	ug/kg					12/04/03 12:47
Silver				J	91.6	ug/kg					12/03/03 20:51
Sodium				U	ND	ug/kg					
Thallium				U	ND	ug/kg					
Vanadium				U	ND	ug/kg					
Zinc				J	268	ug/kg					
QC1200531728	102538001 MS										
Aluminum		251000	5930000		9090000	ug/kg		N/A	(75%-125%)		12/03/03 21:25
Antimony		25100	U ND		3820	ug/kg		15*	(75%-125%)		
Arsenic		25100	2640		25300	ug/kg		90	(75%-125%)		

QC Summary

Workorder: 102538

Parmname	NOM		Sample	Qual	QC	Units	RPD%	REC%	Range	Anlst	Date Time
Metals Analysis-ICP											
Batch 293758											
Barium	25100		70500		88600	ug/kg		72*	(75%-125%)		
Beryllium	25100	J	460		24000	ug/kg		94	(75%-125%)		
Cadmium	25100	U	ND		23100	ug/kg		92	(75%-125%)		
Calcium	251000		2700000		2350000	ug/kg		N/A	(75%-125%)		
Chromium	25100		5660		27700	ug/kg		88	(75%-125%)		
Cobalt	25100		2370		24800	ug/kg		89	(75%-125%)		
Copper	25100		7720		31100	ug/kg		93	(75%-125%)		
Iron	251000		7650000		8140000	ug/kg		N/A	(75%-125%)		
Lead	25100		38000		41000	ug/kg		12*	(75%-125%)		
Magnesium	251000		776000		1080000	ug/kg		121	(75%-125%)		
Manganese	25100		295000		281000	ug/kg		N/A	(75%-125%)		
Nickel	25100		5490		28100	ug/kg		90	(75%-125%)		
Potassium	251000		515000		826000	ug/kg		124	(75%-125%)		
Selenium	25100	J	471		21000	ug/kg		82	(75%-125%)		
Silver	25100	U	ND		22700	ug/kg		90	(75%-125%)		
Sodium	251000		441000		637000	ug/kg		78	(75%-125%)		
Thallium	25100	U	ND		21000	ug/kg		83	(75%-125%)		
Vanadium	25100		9820		32000	ug/kg		88	(75%-125%)		
Zinc	25100		27100		50500	ug/kg		93	(75%-125%)		
QC1200531729 102538001 MSD											
Aluminum	235000		5930000		8070000	ug/kg	12	N/A	(0%-20%)		12/03/03 21:31
Antimony	23500	U	ND		4830	ug/kg	24*	21*	(0%-20%)		
Arsenic	23500		2640		23800	ug/kg	6	90	(0%-20%)		
Barium	23500		70500		87200	ug/kg	2	71*	(0%-20%)		
Beryllium	23500	J	460		22400	ug/kg	7	93	(0%-20%)		
Cadmium	23500	U	ND		21600	ug/kg	7	92	(0%-20%)		
Calcium	235000		2700000		2300000	ug/kg	2	N/A	(0%-20%)		
Chromium	23500		5660		27000	ug/kg	3	91	(0%-20%)		
Cobalt	23500		2370		23200	ug/kg	7	89	(0%-20%)		
Copper	23500		7720		31200	ug/kg	0	100	(0%-20%)		
Iron	235000		7650000		8120000	ug/kg	0	N/A	(0%-20%)		
Lead	23500		38000		36100	ug/kg	13	0*	(0%-20%)		
Magnesium	235000		776000		998000	ug/kg	8	94	(0%-20%)		
Manganese	23500		295000		272000	ug/kg	4	N/A	(0%-20%)		
Nickel	23500		5490		27300	ug/kg	3	93	(0%-20%)		
Potassium	235000		515000		755000	ug/kg	9	102	(0%-20%)		
Selenium	23500	J	471		20500	ug/kg	2	85	(0%-20%)		
Silver	23500	U	ND		21400	ug/kg	6	91	(0%-20%)		
Sodium	235000		441000		588000	ug/kg	8	63*	(0%-20%)		
Thallium	23500	U	ND		20300	ug/kg	3	86	(0%-20%)		
Vanadium	23500		9820		31200	ug/kg	3	91	(0%-20%)		
Zinc	23500		27100		48100	ug/kg	5	89	(0%-20%)		
QC1200531727 102538001 SDILT											
Aluminum			57300		11600	ug/L	1.16				12/03/03 21:12
Antimony		U	ND	U	ND	ug/L	N/A				
Arsenic			25.5	J	4.30	ug/L	15.6				
Barium			681		142	ug/L	4.02				
Beryllium		J	4.44	J	0.940	ug/L	5.8				

QC Summary

Workorder: 102538

Parmname	NOM	Sample	Qual	QC	Units	RPD%	REC%	Range	Anlst	Date Time
Metals Analysis-ICP										
Batch 293758										
Cadmium		U ND	U	ND	ug/L	N/A				
Calcium		26100		5280	ug/L	1.11				
Chromium		54.6		11.5	ug/L	4.99				
Cobalt		22.9		5.25	ug/L	14.9				
Copper		74.5		15.8	ug/L	6.1				
Iron		73900		15100	ug/L	2.15				
Lead		366		77.6	ug/L	5.95				
Magnesium		7490		1530	ug/L	2.12				
Manganese		2840		594	ug/L	4.43				
Nickel		53.0		11.6	ug/L	9.84				
Potassium		4970		962	ug/L	3.26				
Selenium		J 4.55	J	3.78	ug/L	315				
Silver		U ND	U	ND	ug/L	N/A				
Sodium		4250		834	ug/L	1.99				
Thallium		U ND	U	ND	ug/L	N/A				
Vanadium		94.8		19.0	ug/L	.00844				
Zinc		262		55.2	ug/L	5.37				
Metals Analysis-Mercury										
Batch 293699										
QC1200531605 102538001 DUP										
Mercury		J 9.75	J	9.67	ug/kg	N/A ^		(+/-10.3)	NOR1	12/01/03 11:20
QC1200531608 LCS										
Mercury	9410			10400	ug/kg		111	(66%-134%)		12/01/03 11:16
QC1200531604 MB										
Mercury			U	ND	ug/kg					12/01/03 11:14
QC1200531606 102538001 MS										
Mercury	103	J 9.75		120	ug/kg		107	(75%-125%)		12/01/03 11:22
QC1200531607 102538001 MSD										
Mercury	100	J 9.75		117	ug/kg	3	107	(0%-20%)		12/01/03 11:23
Rad Alpha Spec										
Batch 296051										
QC1200537343 102538002 DUP										
Americium-241		U 0.0914 +/-0.136	U	0.0947 +/-0.129	pCi/g	4			MLA	12/16/03 12:06
QC1200537345 LCS										
Americium-241	13.3			13.2 +/-2.05	pCi/g		99			
QC1200537342 MB										
Americium-241			U	0.131 +/-0.149	pCi/g					
QC1200537344 102538002 MS										
Americium-241	13.3	U 0.0914 +/-0.136		13.1 +/-2.13	pCi/g		98			
Batch 296052										
QC1200537347 102538002 DUP										
Plutonium-238		U 0.00 +/-2.00	U	-0.0213 +/-0.0247	pCi/g	N/A		(0%-20%)	MLA	12/16/03 12:25
Plutonium-239/240		U -0.00643	U	-0.00709	pCi/g	N/A		(0%-20%)		

QC Summary

Workorder: 102538

Parmname	NOM		Sample	Qual	QC	Units	RPD%	REC%	Range	Anlst	Date Time
Rad Alpha Spec											
Batch 296052											
			+/-0.0129		+/-0.0142						
QC1200537349 LCS											
Plutonium-238					21.4 +/-2.61	pCi/g			(75%-125%)		
Plutonium-239/240	21.0			U	0.0488 +/-0.0797	pCi/g		102	(75%-125%)		
QC1200537346 MB											
Plutonium-238				U	0.0306 +/-0.105	pCi/g					
Plutonium-239/240				U	-0.0068 +/-0.0136	pCi/g					
QC1200537348 102538002 MS											
Plutonium-238		U	0.00 +/-2.00		23.0 +/-2.81	pCi/g			(75%-125%)		
Plutonium-239/240	21.0	U	-0.00643 +/-0.0129		0.308 +/-0.193	pCi/g		110	(75%-125%)		
Batch 296053											
QC1200537351 102538002 DUP											
Uranium-233/234			0.957 +/-0.406		0.823 +/-0.362	pCi/g	15		(0%-20%)	MLA	12/16/03 12:26
Uranium-235/236		U	0.0198 +/-0.0803	U	-0.00709 +/-0.0805	pCi/g	N/A		(0%-20%)		
Uranium-238			0.786 +/-0.361		0.707 +/-0.328	pCi/g	11		(0%-20%)		
QC1200537353 LCS											
Uranium-233/234					12.6 +/-2.06	pCi/g			(75%-125%)		12/16/03 12:28
Uranium-235/236					0.714 +/-0.335	pCi/g			(75%-125%)		
Uranium-238	12.1				12.9 +/-2.09	pCi/g		107	(75%-125%)		
QC1200537350 MB											
Uranium-233/234				U	0.135 +/-0.145	pCi/g					12/16/03 12:26
Uranium-235/236				U	0.019 +/-0.120	pCi/g					
Uranium-238				U	-0.0606 +/-0.0435	pCi/g					
QC1200537352 102538002 MS											
Uranium-233/234			0.957 +/-0.406		14.6 +/-2.38	pCi/g			(75%-125%)		12/16/03 12:28
Uranium-235/236		U	0.0198 +/-0.0803		0.517 +/-0.295	pCi/g			(75%-125%)		
Uranium-238	12.1		0.786 +/-0.361		14.3 +/-2.33	pCi/g		112	(75%-125%)		
Batch 296055											
QC1200537355 102538002 DUP											

QC Summary

Workorder: 102538

Parmname	NOM	Sample	Qual	QC	Units	RPD%	REC%	Range	Anlst	Date Time
Rad Alpha Spec										
Batch 296055										
Thorium-232		1.84 +/-0.759		0.917 +/-0.404	pCi/g	67*		(0%-20%)	MLA	12/16/03 11:58
QC1200537357 LCS										
Thorium-232	5.17			5.54 +/-1.79	pCi/g		107	(75%-125%)		
QC1200537354 MB										
Thorium-232			U	0.235 +/-0.403	pCi/g					
QC1200537356 102538002 MS										
Thorium-232	5.17	1.84 +/-0.759		6.25 +/-1.95	pCi/g		85	(75%-125%)		
Rad Gamma Spec										
Batch 295765										
QC1200536683 103013016 DUP										
Cesium-137		0.103 +/-0.0439	U	0.0509 +/-0.102	pCi/g	67*		(0%-20%)	SRB	12/08/03 23:38
QC1200536684 LCS										
Cesium-137	9.25			8.93 +/-0.778	pCi/g		97	(75%-125%)		12/08/03 17:42
QC1200536682 MB										
Cesium-137			U	0.0036 +/-0.0317	pCi/g					12/08/03 19:19
Rad Gas Flow										
Batch 293858										
QC1200532058 101971006 DUP										
Strontium-90		0.0849 +/-0.0273	U	0.0447 +/-0.0279	pCi/g	62*		(0%-20%)	JAS1	12/05/03 22:10
QC1200532060 LCS										
Strontium-90	3.35			3.24 +/-0.186	pCi/g		97	(75%-125%)		12/05/03 19:17
QC1200532057 MB										
Strontium-90			U	0.0134 +/-0.0251	pCi/g					12/05/03 22:10
QC1200532059 101971006 MS										
Strontium-90	6.82	0.0849 +/-0.0273		6.74 +/-0.422	pCi/g		98	(75%-125%)		12/05/03 19:17
Rad Liquid Scintillation										
Batch 296153										
QC1200537559 102913001 DUP										
Tritium	U	-2.93 +/-9.68	U	-1.46 +/-9.80	pCi/g	N/A		(0%-20%)	CTO1	12/12/03 13:48
QC1200537561 LCS										
Tritium	26.4			25.5 +/-3.13	pCi/g		97	(75%-125%)		12/12/03 14:50
QC1200537558 MB										
Tritium			U	-0.964 +/-1.54	pCi/g					12/12/03 13:17
QC1200537560 102913001 MS										

GENERAL ENGINEERING LABORATORIES, LLC
2040 Savage Road Charleston, SC 29407 - (843) 556-8171 - www.gel.com

QC Summary

Workorder: 102538

Parmname	NOM	Sample	Qual	QC	Units	RPD%	REC%	Range	Anlst	Date Time
Rad Liquid Scintillation										
Batch 296153										
Tritium	6690	-2.93 +/-9.68	U	6660 +/-810	pCi/g		100	(75%-125%)		

Notes:
The Qualifiers in this report are defined as follows:

- < Result is less than amount reported.
- > Result is greater than amount reported.
- B Target analyte was detected in the sample as well as the associated blank.
- BD Flag for results below the MDC or a flag for low tracer recovery.
- E Concentration of the target analyte exceeds the instrument calibration range.
- H Analytical holding time exceeded.
- J Indicates an estimated value. The result was greater than the detection limit, but less than the reporting limit.
- P The response between the confirmation column and the primary column is >40%D.
- U Indicates the target analyte was analyzed for but not detected above the detection limit.
- UI Uncertain identification for gamma spectroscopy.
- X Lab-specific qualifier-please see case narrative, data summary package or contact your project manager for details.
- Y QC Samples were not spiked with this compound.
- h Sample preparation or preservation holding time exceeded.

N/A indicates that spike recovery limits do not apply when sample concentration exceeds spike conc. by a factor of 4 or more.
^ The Relative Percent Difference (RPD) obtained from the sample duplicate (DUP) is evaluated against the acceptence criteria when the sample is greater than five times (5X) the contract required detection limit (RL). In cases where either the sample or duplicate value is less than 5X the RL, a control limit of +/- the RL is used to evaluate the DUP result.
For PS, PSD, and SDILT results, the values listed are the measured amounts, not final concentrations.

Where the analytical method has been performed under NELAP certification, the analysis has met all of the requirements of the NELAC standard unless qualified on the QC Summary.

CLIENT: Kleinfelder
Work Order: 0311068
Project: R-26

QC SUMMARY REPORT

Method Blank

Sample ID **MB 111003** Batch ID: **R10067** Test Code: **E300** Units: **mg/L** Analysis Date **11/10/2003 10:20:34 A** Prep Date

Client ID: Run ID: **LC_031110A** SeqNo: **225682**

Analyte	Result	PQL	SPK value	SPK Ref Val	%REC	LowLimit	HighLimit	RPD Ref Val	%RPD	RPDLimit	Qual
Fluoride	ND	0.10									
Chloride	ND	0.10									
Nitrogen, Nitrite (As N)	ND	0.10									
Bromide	ND	0.10									
Nitrogen, Nitrate (As N)	ND	0.10									
Phosphorus, Orthophosphate (As P)	ND	0.50									
Sulfate	ND	0.50									

Sample ID **mb 111003-b** Batch ID: **R10067** Test Code: **E300** Units: **mg/L** Analysis Date **11/10/2003 9:43:19 PM** Prep Date

Client ID: Run ID: **LC_031110A** SeqNo: **225721**

Analyte	Result	PQL	SPK value	SPK Ref Val	%REC	LowLimit	HighLimit	RPD Ref Val	%RPD	RPDLimit	Qual
Fluoride	ND	0.10									
Chloride	ND	0.10									
Nitrogen, Nitrite (As N)	ND	0.10									
Bromide	ND	0.10									
Nitrogen, Nitrate (As N)	ND	0.10									
Phosphorus, Orthophosphate (As P)	ND	0.50									
Sulfate	ND	0.50									

Qualifiers:
ND - Not Detected at the Reporting Limit
J - Analyte detected below quantitation limits
S - Spike Recovery outside accepted recovery limits
R - RPD outside accepted recovery limits
B - Analyte detected in the associated Method Blank

CLIENT: Kleinfelder
Work Order: 0311068
Project: R-26

QC SUMMARY REPORT
Method Blank

Sample ID **MB-4692** Batch ID: **4692** Test Code: **SW8080A** Units: **mg/Kg** Analysis Date **12/3/2003 4:28:09 AM** Prep Date **11/19/2003**
Client ID: Run ID: **ECD(17A)_031202A** SeqNo: **229821**

Analyte	Result	PQL	SPK value	SPK Ref Val	%REC	LowLimit	HighLimit	RPD Ref Val	%RPD	RPDLimit	Qual
Aroclor 1016	ND	0.050									
Aroclor 1221	ND	0.25									
Aroclor 1232	ND	0.050									
Aroclor 1242	ND	0.050									
Aroclor 1248	ND	0.050									
Aroclor 1254	ND	0.050									
Aroclor 1260	ND	0.050									
Surr: Decachlorobiphenyl	0.2338	0	0.25	0	93.5	50.1	115	0			

Sample ID **MB-4653** Batch ID: **4653** Test Code: **SW8080A** Units: **µg/L** Analysis Date **11/20/2003 8:01:27 AM** Prep Date **11/13/2003**
Client ID: Run ID: **HUGO_031119A** SeqNo: **228120**

Analyte	Result	PQL	SPK value	SPK Ref Val	%REC	LowLimit	HighLimit	RPD Ref Val	%RPD	RPDLimit	Qual
Aroclor 1016	ND	1.0									
Aroclor 1221	ND	5.0									
Aroclor 1232	ND	1.0									
Aroclor 1242	ND	1.0									
Aroclor 1248	ND	1.0									
Aroclor 1254	ND	1.0									
Aroclor 1260	ND	1.0									
Surr: Decachlorobiphenyl	4.62	0	5	0	92.4	76	111	0			
Surr: Tetrachloro-m-xylene	3.75	0	5	0	75.0	47	94	0			

Qualifiers:
ND - Not Detected at the Reporting Limit
J - Analyte detected below quantitation limits
S - Spike Recovery outside accepted recovery limits
R - RPD outside accepted recovery limits
B - Analyte detected in the associated Method Blank

CLIENT: Kleinfelder
Work Order: 0311068
Project: R-26

QC SUMMARY REPORT
Method Blank

Sample ID mb-4691 Batch ID: 4691 Test Code: SW8270A Units: mg/Kg Analysis Date 11/21/2003 Prep Date 11/19/2003
Client ID: Run ID: ELMO_031121A SeqNo: 228469

Analyte	Result	PQL	SPK value	SPK Ref Val	%REC	LowLimit	HighLimit	RPD Ref Val	%RPD	RPDLimit	Qual
Acenaphthene	ND	0.20									
Acenaphthylene	ND	0.20									
Aniline	ND	0.20									
Anthracene	ND	0.20									
Azobenzene	ND	0.20									
Benz(a)anthracene	ND	0.20									
Benzidine	ND	0.20									
Benzo(a)pyrene	ND	0.20									
Benzo(b)fluoranthene	ND	0.20									
Benzo(g,h,i)perylene	ND	0.20									
Benzo(k)fluoranthene	ND	0.20									
Benzoic acid	ND	0.50									
Benzyl alcohol	ND	0.20									
Bis(2-chloroethoxy)methane	ND	0.20									
Bis(2-chloroethyl)ether	ND	0.20									
Bis(2-chloroisopropyl)ether	ND	0.20									
Bis(2-ethylhexyl)phthalate	ND	0.20									
4-Bromophenyl phenyl ether	ND	0.20									
Butyl benzyl phthalate	0.0565	0.20									J
Carbazole	ND	0.20									
4-Chloro-3-methylphenol	ND	0.20									
4-Chloroaniline	ND	0.20									
2-Chloronaphthalene	ND	0.20									
2-Chlorophenol	ND	0.20									
4-Chlorophenyl phenyl ether	ND	0.20									
Chrysene	ND	0.20									
Di-n-butyl phthalate	0.356	0.20									
Di-n-octyl phthalate	ND	0.20									

Qualifiers:
ND - Not Detected at the Reporting Limit
J - Analyte detected below quantitation limits
S - Spike Recovery outside accepted recovery limits
R - RPD outside accepted recovery limits
B - Analyte detected in the associated Method Blank

CLIENT: Kleinfelder
Work Order: 0311068
Project: R-26

QC SUMMARY REPORT
Method Blank

Dibenz(a,h)anthracene	0.0995	0.20	J
Dibenzofuran	ND	0.20	
1,2-Dichlorobenzene	ND	0.20	
1,3-Dichlorobenzene	ND	0.20	
1,4-Dichlorobenzene	ND	0.20	
3,3'-Dichlorobenzidine	0.09	0.20	J
Diethyl phthalate	ND	0.20	
Dimethyl phthalate	ND	0.20	
2,4-Dichlorophenol	ND	0.20	
2,4-Dimethylphenol	ND	0.20	
4,6-Dinitro-2-methylphenol	ND	0.50	
2,4-Dinitrophenol	ND	0.50	
2,4-Dinitrotoluene	ND	0.20	
2,6-Dinitrotoluene	ND	0.20	
Fluoranthene	ND	0.20	
Fluorene	ND	0.20	
Hexachlorobenzene	ND	0.20	
Hexachlorobutadiene	ND	0.20	
Hexachlorocyclopentadiene	ND	0.20	
Hexachloroethane	ND	0.20	
Indeno(1,2,3-cd)pyrene	0.0695	0.20	J
Isophorone	ND	0.20	
2-Methylnaphthalene	ND	0.20	
2-Methylphenol	ND	0.20	
3+4-Methylphenol	ND	0.20	
N-Nitrosodi-n-propylamine	ND	0.20	
N-Nitrosodiphenylamine	ND	0.20	
Naphthalene	ND	0.20	
2-Nitroaniline	ND	0.50	
3-Nitroaniline	ND	0.50	
4-Nitroaniline	ND	0.20	
Nitrobenzene	ND	0.20	
2-Nitrophenol	ND	0.20	

Qualifiers:
ND - Not Detected at the Reporting Limit
J - Analyte detected below quantitation limits
S - Spike Recovery outside accepted recovery limits
R - RPD outside accepted recovery limits
B - Analyte detected in the associated Method Blank

CLIENT: Kleinfelder
Work Order: 0311068
Project: R-26

QC SUMMARY REPORT
Method Blank

4-Nitrophenol	0.1655	0.20							J
Pentachlorophenol	0.1685	0.50							J
Phenanthrene	ND	0.20							
Phenol	ND	0.20							
Pyrene	ND	0.20							
Pyridine	ND	0.50							
1,2,4-Trichlorobenzene	ND	0.20							
2,4,5-Trichlorophenol	ND	0.20							
2,4,6-Trichlorophenol	ND	0.20							
Surr: 2,4,6-Tribromophenol	4.182	0	5	0	83.6	26	156	0	
Surr: 2-Fluorobiphenyl	2.244	0	2.5	0	89.7	23.6	111	0	
Surr: 2-Fluorophenol	4.26	0	5	0	85.2	21.5	107	0	
Surr: 4-Terphenyl-d14	2.482	0	2.5	0	99.3	30	120	0	
Surr: Nitrobenzene-d5	2.035	0	2.5	0	81.4	25.3	115	0	
Surr: Phenol-d6	5.002	0	5	0	100	25.2	115	0	

Qualifiers:
ND - Not Detected at the Reporting Limit
J - Analyte detected below quantitation limits
S - Spike Recovery outside accepted recovery limits
R - RPD outside accepted recovery limits
B - Analyte detected in the associated Method Blank

CLIENT: Kleinfelder
Work Order: 0311068
Project: R-26

QC SUMMARY REPORT
Method Blank

Sample ID **mb-4645** Batch ID: **4645** Test Code: **SW8270A** Units: **µg/L** Analysis Date **11/14/2003** Prep Date **11/12/2003**
Client ID: Run ID: **ELMO_031114A** SeqNo: **226987**

Analyte	Result	PQL	SPK value	SPK Ref Val	%REC	LowLimit	HighLimit	RPD Ref Val	%RPD	RPDLimit	Qual
Acenaphthene	ND	10									
Acenaphthylene	ND	10									
Aniline	ND	10									
Anthracene	ND	10									
Azobenzene	ND	10									
Benz(a)anthracene	ND	10									
Benzidine	ND	20									
Benzo(a)pyrene	ND	10									
Benzo(b)fluoranthene	ND	10									
Benzo(g,h,i)perylene	ND	10									
Benzo(k)fluoranthene	ND	10									
Benzoic acid	ND	50									
Benzyl alcohol	ND	20									
Bis(2-chloroethoxy)methane	ND	10									
Bis(2-chloroethyl)ether	ND	10									
Bis(2-chloroisopropyl)ether	ND	10									
Bis(2-ethylhexyl)phthalate	ND	10									
4-Bromophenyl phenyl ether	ND	10									
Butyl benzyl phthalate	ND	10									
Carbazole	ND	10									
4-Chloro-3-methylphenol	ND	20									
4-Chloroaniline	ND	20									
2-Chloronaphthalene	ND	10									
2-Chlorophenol	ND	10									
4-Chlorophenyl phenyl ether	ND	10									
Chrysene	ND	10									
Di-n-butyl phthalate	ND	10									
Di-n-octyl phthalate	ND	10									

Qualifiers:
ND - Not Detected at the Reporting Limit
J - Analyte detected below quantitation limits
S - Spike Recovery outside accepted recovery limits
R - RPD outside accepted recovery limits
B - Analyte detected in the associated Method Blank

Dibenz(a,h)anthracene	ND	10
Dibenzofuran	ND	10
1,2-Dichlorobenzene	ND	10
1,3-Dichlorobenzene	ND	10
1,4-Dichlorobenzene	ND	10
3,3'-Dichlorobenzidine	ND	10
Diethyl phthalate	ND	10
Dimethyl phthalate	ND	10
2,4-Dichlorophenol	ND	10
2,4-Dimethylphenol	ND	10
4,6-Dinitro-2-methylphenol	ND	50
2,4-Dinitrophenol	ND	50
2,4-Dinitrotoluene	ND	10
2,6-Dinitrotoluene	ND	10
Fluoranthene	ND	10
Fluorene	ND	10
Hexachlorobenzene	ND	10
Hexachlorobutadiene	ND	10
Hexachlorocyclopentadiene	ND	10
Hexachloroethane	ND	10
Indeno(1,2,3-cd)pyrene	ND	10
Isophorone	ND	10
2-Methylnaphthalene	ND	10
2-Methylphenol	ND	10
3+4-Methylphenol	ND	10
N-Nitrosodi-n-propylamine	ND	10
N-Nitrosodiphenylamine	ND	10
Naphthalene	ND	10
2-Nitroaniline	ND	50
3-Nitroaniline	ND	50
4-Nitroaniline	ND	20
Nitrobenzene	ND	10
2-Nitrophenol	ND	10

CLIENT: Kleinfelder
Work Order: 0311068
Project: R-26

QC SUMMARY REPORT
Method Blank

4-Nitrophenol	ND	50							
Pentachlorophenol	ND	50							
Phenanthrene	ND	10							
Phenol	ND	10							
Pyrene	ND	10							
Pyridine	ND	10							
1,2,4-Trichlorobenzene	ND	10							
2,4,5-Trichlorophenol	ND	10							
2,4,6-Trichlorophenol	ND	10							
Surr: 2,4,6-Tribromophenol	129.8	0	200	0	64.9	16.6	115	0	
Surr: 2-Fluorobiphenyl	70.93	0	100	0	70.9	37	95.7	0	
Surr: 2-Fluorophenol	114.3	0	200	0	57.2	9.54	89.8	0	
Surr: 4-Terphenyl-d14	82.02	0	100	0	82.0	70	130	0	
Surr: Nitrobenzene-d5	74.43	0	100	0	74.4	38	106	0	
Surr: Phenol-d6	87.73	0	200	0	43.9	10.7	63.4	0	

Sample ID **MB-4705** Batch ID: **4705** Test Code: **SW7470** Units: **mg/L** Analysis Date **11/21/2003** Prep Date **11/21/2003**
Client ID: Run ID: **MI-LA254_031121B** SeqNo: **228479**

Analyte	Result	PQL	SPK value	SPK Ref Val	%REC	LowLimit	HighLimit	RPD Ref Val	%RPD	RPDLimit	Qual
Mercury	ND	0.020									

Sample ID **MB-4697** Batch ID: **4697** Test Code: **SW1311/6010** Units: **mg/L** Analysis Date **11/21/2003 10:49:05 A** Prep Date **11/20/2003**
Client ID: Run ID: **ICP_031121A** SeqNo: **228323**

Analyte	Result	PQL	SPK value	SPK Ref Val	%REC	LowLimit	HighLimit	RPD Ref Val	%RPD	RPDLimit	Qual
Arsenic	ND	5.0									
Barium	ND	100									
Cadmium	ND	1.0									
Chromium	ND	5.0									
Lead	ND	5.0									
Selenium	ND	1.0									
Silver	0.007017	5.0									J

Qualifiers: ND - Not Detected at the Reporting Limit; S - Spike Recovery outside accepted recovery limits; B - Analyte detected in the associated Method Blank
J - Analyte detected below quantitation limits; R - RPD outside accepted recovery limits

Hall Environmental Analysis Laboratory

Date: *22-Dec-03*

CLIENT: Kleinfelder
Work Order: 0311068
Project: R-26

QC SUMMARY REPORT
Method Blank

Sample ID **mb 4644** Batch ID: **4644** Test Code: **SW8260B** Units: **mg/Kg** Analysis Date **11/13/2003** Prep Date **11/12/2003**

Client ID: Run ID: **VAL_031113B** SeqNo: **226703**

Analyte	Result	PQL	SPK value	SPK Ref Val	%REC	LowLimit	HighLimit	RPD Ref Val	%RPD	RPDLimit	Qual
Benzene	ND	0.050									
Toluene	ND	0.050									
Ethylbenzene	ND	0.050									
Methyl tert-butyl ether (MTBE)	ND	0.050									
1,2,4-Trimethylbenzene	ND	0.050									
1,3,5-Trimethylbenzene	ND	0.050									
1,2-Dichloroethane (EDC)	ND	0.050									
1,2-Dibromoethane (EDB)	ND	0.050									
Naphthalene	ND	0.10									
1-Methylnaphthalene	ND	0.20									
2-Methylnaphthalene	ND	0.20									
Acetone	ND	0.50									
Bromobenzene	ND	0.050									
Bromochloromethane	ND	0.050									
Bromodichloromethane	ND	0.050									
Bromoform	ND	0.050									
Bromomethane	ND	0.10									
2-Butanone	ND	0.50									
Carbon disulfide	ND	0.50									
Carbon tetrachloride	ND	0.050									
Chlorobenzene	ND	0.050									
Chloroethane	ND	0.10									
Chloroform	ND	0.050									
Chloromethane	ND	0.050									
2-Chlorotoluene	ND	0.050									
4-Chlorotoluene	ND	0.050									
cis-1,2-DCE	ND	0.050									

Qualifiers:
ND - Not Detected at the Reporting Limit
J - Analyte detected below quantitation limits
S - Spike Recovery outside accepted recovery limits
R - RPD outside accepted recovery limits
B - Analyte detected in the associated Method Blank

1

CLIENT: Kleinfelder
Work Order: 0311068
Project: R-26

QC SUMMARY REPORT
Method Blank

cis-1,3-Dichloropropene	ND	0.050	
1,2-Dibromo-3-chloropropane	ND	0.10	
Dibromochloromethane	ND	0.050	
Dibromomethane	ND	0.10	
1,2-Dichlorobenzene	ND	0.050	
1,3-Dichlorobenzene	ND	0.050	
1,4-Dichlorobenzene	ND	0.050	
Dichlorodifluoromethane	ND	0.050	
1,1-Dichloroethane	ND	0.050	
1,1-Dichloroethene	ND	0.050	
1,2-Dichloropropane	ND	0.050	
1,3-Dichloropropane	ND	0.050	
2,2-Dichloropropane	ND	0.050	
1,1-Dichloropropene	ND	0.050	
Hexachlorobutadiene	ND	0.050	
2-Hexanone	ND	0.50	
Isopropylbenzene	ND	0.050	
4-Isopropyltoluene	ND	0.050	
4-Methyl-2-pentanone	ND	0.50	
Methylene chloride	0.0297	0.15	J
n-Butylbenzene	ND	0.050	
n-Propylbenzene	ND	0.050	
sec-Butylbenzene	ND	0.050	
Styrene	ND	0.050	
tert-Butylbenzene	ND	0.050	
1,1,1,2-Tetrachloroethane	ND	0.050	
1,1,2,2-Tetrachloroethane	ND	0.050	
Tetrachloroethene (PCE)	ND	0.050	
trans-1,2-DCE	ND	0.050	
trans-1,3-Dichloropropene	ND	0.050	
1,2,3-Trichlorobenzene	ND	0.050	
1,2,4-Trichlorobenzene	ND	0.050	
1,1,1-Trichloroethane	ND	0.050	

Qualifiers:
ND - Not Detected at the Reporting Limit
J - Analyte detected below quantitation limits
S - Spike Recovery outside accepted recovery limits
R - RPD outside accepted recovery limits
B - Analyte detected in the associated Method Blank

CLIENT: Kleinfelder
Work Order: 0311068
Project: R-26

QC SUMMARY REPORT
Method Blank

1,1,2-Trichloroethane	ND	0.050						
Trichloroethene (TCE)	ND	0.050						
Trichlorofluoromethane	ND	0.050						
1,2,3-Trichloropropane	ND	0.10						
Vinyl chloride	ND	0.10						
Xylenes, Total	ND	0.050						
Surr: 1,2-Dichloroethane-d4	0.5274	0	0.5	0	105	68.4	123	0
Surr: 4-Bromofluorobenzene	0.484	0	0.5	0	96.8	70	119	0
Surr: Dibromofluoromethane	0.5129	0	0.5	0	103	76.8	123	0
Surr: Toluene-d8	0.5185	0	0.5	0	104	85.2	123	0

Qualifiers:
ND - Not Detected at the Reporting Limit
J - Analyte detected below quantitation limits
S - Spike Recovery outside accepted recovery limits
R - RPD outside accepted recovery limits
B - Analyte detected in the associated Method Blank

CLIENT: Kleinfelder
Work Order: 0311068
Project: R-26

QC SUMMARY REPORT
Method Blank

Sample ID 5ml rb | Batch ID: R10078 | Test Code: SW8260B | Units: µg/L | Analysis Date 11/11/2003 | Prep Date
Client ID: | Run ID: NEPTUNE_031111A | SeqNo: 226011

Analyte	Result	PQL	SPK value	SPK Ref Val	%REC	LowLimit	HighLimit	RPD Ref Val	%RPD	RPDLimit	Qual
Benzene	ND	1.0									
Toluene	ND	1.0									
Ethylbenzene	ND	1.0									
Methyl tert-butyl ether (MTBE)	ND	1.0									
1,2,4-Trimethylbenzene	ND	1.0									
1,3,5-Trimethylbenzene	ND	1.0									
1,2-Dichloroethane (EDC)	ND	1.0									
1,2-Dibromoethane (EDB)	ND	1.0									
Naphthalene	ND	2.0									
1-Methylnaphthalene	ND	4.0									
2-Methylnaphthalene	ND	4.0									
Acetone	ND	10									
Bromobenzene	ND	1.0									
Bromochloromethane	ND	1.0									
Bromodichloromethane	ND	1.0									
Bromoform	ND	1.0									
Bromomethane	ND	2.0									
2-Butanone	ND	10									
Carbon disulfide	ND	10									
Carbon Tetrachloride	ND	1.0									
Chlorobenzene	ND	1.0									
Chloroethane	ND	2.0									
Chloroform	ND	1.0									
Chloromethane	ND	1.0									
2-Chlorotoluene	ND	1.0									
4-Chlorotoluene	ND	1.0									
cis-1,2-DCE	ND	1.0									
cis-1,3-Dichloropropene	ND	1.0									

Qualifiers:
ND - Not Detected at the Reporting Limit
J - Analyte detected below quantitation limits
S - Spike Recovery outside accepted recovery limits
R - RPD outside accepted recovery limits
B - Analyte detected in the associated Method Blank

CLIENT: Kleinfelder
Work Order: 0311068
Project: R-26

QC SUMMARY REPORT
Method Blank

1,2-Dibromo-3-chloropropane	ND	2.0
Dibromochloromethane	ND	1.0
Dibromomethane	ND	2.0
1,2-Dichlorobenzene	ND	1.0
1,3-Dichlorobenzene	ND	1.0
1,4-Dichlorobenzene	ND	1.0
Dichlorodifluoromethane	ND	1.0
1,1-Dichloroethane	ND	1.0
1,1-Dichloroethene	ND	1.0
1,2-Dichloropropane	ND	1.0
1,3-Dichloropropane	ND	1.0
2,2-Dichloropropane	ND	1.0
1,1-Dichloropropene	ND	1.0
Hexachlorobutadiene	ND	1.0
2-Hexanone	ND	10
Isopropylbenzene	ND	1.0
4-Isopropyltoluene	ND	1.0
4-Methyl-2-pentanone	ND	10
Methylene Chloride	ND	3.0
n-Butylbenzene	ND	1.0
n-Propylbenzene	ND	1.0
sec-Butylbenzene	ND	1.0
Styrene	ND	1.0
tert-Butylbenzene	ND	1.0
1,1,1,2-Tetrachloroethane	ND	1.0
1,1,2,2-Tetrachloroethane	ND	1.0
Tetrachloroethene (PCE)	ND	1.0
trans-1,2-DCE	ND	1.0
trans-1,3-Dichloropropene	ND	1.0
1,2,3-Trichlorobenzene	ND	1.0
1,2,4-Trichlorobenzene	ND	1.0
1,1,1-Trichloroethane	ND	1.0
1,1,2-Trichloroethane	ND	1.0

Qualifiers:
ND - Not Detected at the Reporting Limit
J - Analyte detected below quantitation limits
S - Spike Recovery outside accepted recovery limits
R - RPD outside accepted recovery limits
B - Analyte detected in the associated Method Blank

CLIENT: Kleinfelder
Work Order: 0311068
Project: R-26

QC SUMMARY REPORT
Method Blank

Trichloroethene (TCE)	ND	1.0						
Trichlorofluoromethane	ND	1.0						
1,2,3-Trichloropropane	ND	2.0						
Vinyl chloride	ND	2.0						
Xylenes, Total	ND	1.0						
Surr: 1,2-Dichloroethane-d4	9.736	0	10	0	97.4	68.4	127	0
Surr: 4-Bromofluorobenzene	9.142	0	10	0	91.4	70.4	126	0
Surr: Dibromofluoromethane	9.65	0	10	0	96.5	70.2	126	0
Surr: Toluene-d8	10.44	0	10	0	104	73.5	129	0

Qualifiers:
ND - Not Detected at the Reporting Limit
J - Analyte detected below quantitation limits
S - Spike Recovery outside accepted recovery limits
R - RPD outside accepted recovery limits
B - Analyte detected in the associated Method Blank

CLIENT: Kleinfelder
Work Order: 0311068
Project: R-26

QC SUMMARY REPORT

Sample Duplicate

Sample ID **0311068-03A DUP** Batch ID: **4697** Test Code: **SW1311/6010** Units: **mg/L** Analysis Date **11/21/2003 11:17:05 A** Prep Date **11/20/2003**

Client ID: **R-26 cuttings** Run ID: **ICP_031121A** SeqNo: **228332**

Analyte	Result	PQL	SPK value	SPK Ref Val	%REC	LowLimit	HighLimit	RPD Ref Val	%RPD	RPDLimit	Qual
Arsenic	ND	5.0	0	0	0	0	0	0	0	30	
Barium	1.039	100	0	0	0	0	0	1.01	0	30	J
Cadmium	ND	1.0	0	0	0	0	0	0	0	30	
Chromium	0.007411	5.0	0	0	0	0	0	0.006618	0	30	J
Lead	0.05754	5.0	0	0	0	0	0	0.05466	0	30	J
Selenium	0.0548	1.0	0	0	0	0	0	0.05225	0	30	J
Silver	ND	5.0	0	0	0	0	0	0	0	30	

Qualifiers:
ND - Not Detected at the Reporting Limit
J - Analyte detected below quantitation limits
S - Spike Recovery outside accepted recovery limits
R - RPD outside accepted recovery limits
B - Analyte detected in the associated Method Blank

Hall Environmental Analysis Laboratory

Date: *22-Dec-03*

CLIENT: Kleinfelder
Work Order: 0311068
Project: R-26

QC SUMMARY REPORT

Sample Matrix Spike

Sample ID **0311068-03A MS** Batch ID: **4697** Test Code: **SW1311/6010** Units: **mg/L** Analysis Date **11/21/2003 11:19:26 A** Prep Date **11/20/2003**

Client ID: **R-26 cuttings** Run ID: **ICP_031121A** SeqNo: **228333**

Analyte	Result	PQL	SPK value	SPK Ref Val	%REC	LowLimit	HighLimit	RPD Ref Val	%RPD	RPDLimit	Qual
Arsenic	0.5	5.0	0.5	0	100	75	125	0			
Barium	1.481	100	0.5	1.01	94.2	75	125	0			
Cadmium	0.4867	1.0	0.5	0	97.3	75	125	0			
Chromium	0.4807	5.0	0.5	0.006618	94.8	75	125	0			
Lead	0.4881	5.0	0.5	0.05466	86.7	75	125	0			
Selenium	0.5332	1.0	0.5	0.05225	96.2	75	125	0			
Silver	0.4967	5.0	0.5	0	99.3	75	125	0			

Qualifiers:
ND - Not Detected at the Reporting Limit
J - Analyte detected below quantitation limits
S - Spike Recovery outside accepted recovery limits
R - RPD outside accepted recovery limits
B - Analyte detected in the associated Method Blank

Hall Environmental Analysis Laboratory

Date: *22-Dec-03*

CLIENT: Kleinfelder
Work Order: 0311068
Project: R-26

QC SUMMARY REPORT

Laboratory Control Spike - generic

Sample ID **LCS 111003** Batch ID: **R10067** Test Code: **E300** Units: **mg/L** Analysis Date **11/10/2003 10:37:18 A** Prep Date

Client ID: Run ID: **LC_031110A** SeqNo: **225683**

Analyte	Result	PQL	SPK value	SPK Ref Val	%REC	LowLimit	HighLimit	RPD Ref Val	%RPD	RPDLimit	Qual
Fluoride	0.5265	0.10	0.5	0	105	90	110	0			
Chloride	5.228	0.10	5	0	105	90	110	0			
Nitrogen, Nitrite (As N)	1.008	0.10	1	0	101	90	110	0			
Bromide	2.628	0.10	2.5	0	105	90	110	0			
Nitrogen, Nitrate (As N)	2.532	0.10	2.5	0	101	90	110	0			
Phosphorus, Orthophosphate (As P)	4.952	0.50	5	0	99.0	90	110	0			
Sulfate	9.737	0.50	10	0	97.4	90	110	0			

Sample ID **lcs 111003-b** Batch ID: **R10067** Test Code: **E300** Units: **mg/L** Analysis Date **11/10/2003 10:00:03 P** Prep Date

Client ID: Run ID: **LC_031110A** SeqNo: **225722**

Analyte	Result	PQL	SPK value	SPK Ref Val	%REC	LowLimit	HighLimit	RPD Ref Val	%RPD	RPDLimit	Qual
Fluoride	0.5492	0.10	0.5	0	110	90	110	0			
Chloride	5.211	0.10	5	0	104	90	110	0			
Nitrogen, Nitrite (As N)	0.9495	0.10	1	0	95.0	90	110	0			
Bromide	2.33	0.10	2.5	0	93.2	90	110	0			
Nitrogen, Nitrate (As N)	2.451	0.10	2.5	0	98.1	90	110	0			
Phosphorus, Orthophosphate (As P)	4.854	0.50	5	0	97.1	90	110	0			
Sulfate	9.596	0.50	10	0	96.0	90	110	0			

Sample ID **LCS-4692** Batch ID: **4692** Test Code: **SW8080A** Units: **mg/Kg** Analysis Date **12/3/2003 5:13:07 AM** Prep Date **11/19/2003**

Client ID: Run ID: **ECD(17A)_031202A** SeqNo: **229823**

Analyte	Result	PQL	SPK value	SPK Ref Val	%REC	LowLimit	HighLimit	RPD Ref Val	%RPD	RPDLimit	Qual
Aroclor 1016	0.222	0.050	0.25	0	88.8	70	130	0			
Aroclor 1260	0.2333	0.050	0.25	0	93.3	67	137	0			

Qualifiers: ND - Not Detected at the Reporting Limit; S - Spike Recovery outside accepted recovery limits; B - Analyte detected in the associated Method Blank; J - Analyte detected below quantitation limits; R - RPD outside accepted recovery limits

1

CLIENT: Kleinfelder
Work Order: 0311068
Project: R-26

QC SUMMARY REPORT
Laboratory Control Spike Duplicate

Sample ID **LCSD-4692** Batch ID: **4692** Test Code: **SW8080A** Units: **mg/Kg** Analysis Date **12/3/2003 5:59:31 AM** Prep Date **11/19/2003**
Client ID: Run ID: **ECD(17A)_031202A** SeqNo: **229825**

Analyte	Result	PQL	SPK value	SPK Ref Val	%REC	LowLimit	HighLimit	RPD Ref Val	%RPD	RPDLimit	Qual
Aroclor 1016	0.2367	0.050	0.25	0	94.7	70	130	0.222	6.39	0	
Aroclor 1260	0.2325	0.050	0.25	0	93.0	67	137	0.2333	0.365	20	

Sample ID **LCS-4653** Batch ID: **4653** Test Code: **SW8080A** Units: **µg/L** Analysis Date **11/20/2003 8:47:36 AM** Prep Date **11/13/2003**
Client ID: Run ID: **HUGO_031119A** SeqNo: **228121**

Analyte	Result	PQL	SPK value	SPK Ref Val	%REC	LowLimit	HighLimit	RPD Ref Val	%RPD	RPDLimit	Qual
Aroclor 1016	3.506	1.0	5	0	70.1	27.4	132	0			
Aroclor 1260	4.612	1.0	5	0	92.2	52.1	148	0			

Sample ID **LCSD-4653** Batch ID: **4653** Test Code: **SW8080A** Units: **µg/L** Analysis Date **11/20/2003 9:33:47 AM** Prep Date **11/13/2003**
Client ID: Run ID: **HUGO_031119A** SeqNo: **228122**

Analyte	Result	PQL	SPK value	SPK Ref Val	%REC	LowLimit	HighLimit	RPD Ref Val	%RPD	RPDLimit	Qual
Aroclor 1016	3.88	1.0	5	0	77.6	27.4	132	3.506	10.1	45.7	
Aroclor 1260	4.642	1.0	5	0	92.8	52.1	148	4.612	0.648	30	

Sample ID **100ng lcs** Batch ID: **R10078** Test Code: **SW8260B** Units: **µg/L** Analysis Date **11/11/2003** Prep Date
Client ID: Run ID: **NEPTUNE_031111A** SeqNo: **226012**

Analyte	Result	PQL	SPK value	SPK Ref Val	%REC	LowLimit	HighLimit	RPD Ref Val	%RPD	RPDLimit	Qual
Benzene	19.53	1.0	20	0	97.7	71.2	122	0			
Toluene	19.8	1.0	20	0	99.0	87.7	122	0			
Chlorobenzene	19.53	1.0	20	0	97.7	85.6	136	0			
1,1-Dichloroethene	18.65	1.0	20	0	93.2	70.7	117	0			
Trichloroethene (TCE)	20.26	1.0	20	0	101	76.9	130	0			

Qualifiers:
ND - Not Detected at the Reporting Limit
J - Analyte detected below quantitation limits
S - Spike Recovery outside accepted recovery limits
R - RPD outside accepted recovery limits
B - Analyte detected in the associated Method Blank

CLIENT: Kleinfelder
Work Order: 0311068
Project: R-26

QC SUMMARY REPORT

Laboratory Control Spike - generic

Sample ID **lcs-4691** Batch ID: **4691** Test Code: **SW8270A** Units: **mg/Kg** Analysis Date **11/21/2003** Prep Date **11/19/2003**
Client ID: Run ID: **ELMO_031121A** SeqNo: **228470**

Analyte	Result	PQL	SPK value	SPK Ref Val	%REC	LowLimit	HighLimit	RPD Ref Val	%RPD	RPDLimit	Qual
Acenaphthene	1.986	0.20	2.5	0	79.4	45	110	0			
4-Chloro-3-methylphenol	4.057	0.20	5	0	81.1	45	110	0			
2-Chlorophenol	3.944	0.20	5	0	78.9	45	110	0			
1,4-Dichlorobenzene	1.925	0.20	2.5	0	77.0	45	110	0			
2,4-Dinitrotoluene	2.118	0.20	2.5	0	84.7	45	110	0			
N-Nitrosodi-n-propylamine	1.818	0.20	2.5	0	72.7	45	110	0			
4-Nitrophenol	4.271	0.20	5	0.1655	82.1	45	110	0			
Pentachlorophenol	4.363	0.50	5	0.1685	83.9	45	110	0			
Phenol	3.909	0.20	5	0	78.2	45	110	0			
Pyrene	2.155	0.20	2.5	0	86.2	45	110	0			
1,2,4-Trichlorobenzene	1.892	0.20	2.5	0	75.7	45	110	0			

Sample ID **lcsd-4691** Batch ID: **4691** Test Code: **SW8270A** Units: **mg/Kg** Analysis Date **11/21/2003** Prep Date **11/19/2003**
Client ID: Run ID: **ELMO_031121A** SeqNo: **228471**

Analyte	Result	PQL	SPK value	SPK Ref Val	%REC	LowLimit	HighLimit	RPD Ref Val	%RPD	RPDLimit	Qual
Acenaphthene	1.903	0.20	2.5	0	76.1	45	110	1.986	4.29	25	
4-Chloro-3-methylphenol	3.868	0.20	5	0	77.4	45	110	4.057	4.78	25	
2-Chlorophenol	3.98	0.20	5	0	79.6	45	110	3.944	0.909	25	
1,4-Dichlorobenzene	1.814	0.20	2.5	0	72.6	45	110	1.925	5.91	25	
2,4-Dinitrotoluene	2.017	0.20	2.5	0	80.7	45	110	2.118	4.89	25	
N-Nitrosodi-n-propylamine	1.904	0.20	2.5	0	76.2	45	110	1.818	4.62	25	
4-Nitrophenol	4.368	0.20	5	0.1655	84.1	45	110	4.271	2.25	25	
Pentachlorophenol	4.177	0.50	5	0.1685	80.2	45	110	4.363	4.36	25	
Phenol	3.738	0.20	5	0	74.8	45	110	3.909	4.47	25	
Pyrene	2.068	0.20	2.5	0	82.7	45	110	2.155	4.12	25	
1,2,4-Trichlorobenzene	1.933	0.20	2.5	0	77.3	45	110	1.892	2.12	25	

Qualifiers: ND - Not Detected at the Reporting Limit; J - Analyte detected below quantitation limits; S - Spike Recovery outside accepted recovery limits; R - RPD outside accepted recovery limits; B - Analyte detected in the associated Method Blank

CLIENT: Kleinfelder
Work Order: 0311068
Project: R-26

QC SUMMARY REPORT
Laboratory Control Spike - generic

Sample ID **lcs-4645** Batch ID: **4645** Test Code: **SW8270A** Units: **µg/L** Analysis Date **11/14/2003** Prep Date **11/12/2003**
Client ID: Run ID: **ELMO_031114A** SeqNo: **226988**

Analyte	Result	PQL	SPK value	SPK Ref Val	%REC	LowLimit	HighLimit	RPD Ref Val	%RPD	RPDLimit	Qual
Acenaphthene	62.17	10	100	0	62.2	43.1	89.9	0			
4-Chloro-3-methylphenol	139.5	20	200	0	69.8	44.1	93.2	0			
2-Chlorophenol	136.9	10	200	0	68.5	20.7	98	0			
1,4-Dichlorobenzene	56.35	10	100	0	56.4	24.1	90.7	0			
2,4-Dinitrotoluene	72.5	10	100	0	72.5	43.2	101	0			
N-Nitrosodi-n-propylamine	63.65	10	100	0	63.6	44.6	99.9	0			
4-Nitrophenol	75.44	50	200	0	37.7	11	57.5	0			
Pentachlorophenol	143.5	50	200	0	71.7	8.65	105	0			
Phenol	73.65	10	200	0	36.8	21.1	55.3	0			
Pyrene	77.63	10	100	0	77.6	35.7	111	0			
1,2,4-Trichlorobenzene	56.94	10	100	0	56.9	30.2	89.6	0			

Sample ID **lcsd-4645** Batch ID: **4645** Test Code: **SW8270A** Units: **µg/L** Analysis Date **11/14/2003** Prep Date **11/12/2003**
Client ID: Run ID: **ELMO_031114A** SeqNo: **226989**

Analyte	Result	PQL	SPK value	SPK Ref Val	%REC	LowLimit	HighLimit	RPD Ref Val	%RPD	RPDLimit	Qual
Acenaphthene	54.69	10	100	0	54.7	43.1	89.9	62.17	12.8	30.5	
4-Chloro-3-methylphenol	128.2	20	200	0	64.1	44.1	93.2	139.5	8.44	28.6	
2-Chlorophenol	131.2	10	200	0	65.6	20.7	98	136.9	4.28	107	
1,4-Dichlorobenzene	53.18	10	100	0	53.2	24.1	90.7	56.35	5.78	62.1	
2,4-Dinitrotoluene	63.18	10	100	0	63.2	43.2	101	72.5	13.7	14.7	
N-Nitrosodi-n-propylamine	59.44	10	100	0	59.4	44.6	99.9	63.65	6.83	30.3	
4-Nitrophenol	66.85	50	200	0	33.4	11	57.5	75.44	12.1	36.3	
Pentachlorophenol	134.3	50	200	0	67.2	8.65	105	143.5	6.59	49	
Phenol	70.23	10	200	0	35.1	21.1	55.3	73.65	4.76	52.4	
Pyrene	72.62	10	100	0	72.6	35.7	111	77.63	6.67	16.3	
1,2,4-Trichlorobenzene	54.68	10	100	0	54.7	30.2	89.6	56.94	4.05	36.4	

Qualifiers: ND - Not Detected at the Reporting Limit; S - Spike Recovery outside accepted recovery limits; B - Analyte detected in the associated Method Blank
J - Analyte detected below quantitation limits; R - RPD outside accepted recovery limits

CLIENT: Kleinfelder
Work Order: 0311068
Project: R-26

QC SUMMARY REPORT
Laboratory Control Spike - generic

Sample ID **LCS-4705** Batch ID: **4705** Test Code: **SW7470** Units: **mg/L** Analysis Date **11/21/2003** Prep Date **11/21/2003**
Client ID: Run ID: **MI-LA254_031121B** SeqNo: **228480**

Analyte	Result	PQL	SPK value	SPK Ref Val	%REC	LowLimit	HighLimit	RPD Ref Val	%RPD	RPDLimit	Qual
Mercury	0.005	0.0020	0.005	0	100	80	120	0			

Sample ID **LCSD-4705** Batch ID: **4705** Test Code: **SW7470** Units: **mg/L** Analysis Date **11/21/2003** Prep Date **11/21/2003**
Client ID: Run ID: **MI-LA254_031121B** SeqNo: **228481**

Analyte	Result	PQL	SPK value	SPK Ref Val	%REC	LowLimit	HighLimit	RPD Ref Val	%RPD	RPDLimit	Qual
Mercury	0.005	0.0020	0.005	0	100	80	120	0.005	0	20	

Sample ID **LCS-4697** Batch ID: **4697** Test Code: **SW1311/6010** Units: **mg/L** Analysis Date **11/21/2003 10:52:53 A** Prep Date **11/20/2003**
Client ID: Run ID: **ICP_031121A** SeqNo: **228324**

Analyte	Result	PQL	SPK value	SPK Ref Val	%REC	LowLimit	HighLimit	RPD Ref Val	%RPD	RPDLimit	Qual
Arsenic	0.4495	5.0	0.5	0	89.9	80	120	0			
Barium	0.4528	100	0.5	0	90.6	80	120	0			
Cadmium	0.4496	1.0	0.5	0	89.9	80	120	0			
Chromium	0.4673	5.0	0.5	0	93.5	80	120	0			
Lead	0.4434	5.0	0.5	0	88.7	80	120	0			
Selenium	0.449	1.0	0.5	0	89.8	80	120	0			
Silver	0.4537	5.0	0.5	0.007017	89.3	80	120	0			

Qualifiers:
ND - Not Detected at the Reporting Limit
J - Analyte detected below quantitation limits
S - Spike Recovery outside accepted recovery limits
R - RPD outside accepted recovery limits
B - Analyte detected in the associated Method Blank

CLIENT: Kleinfelder
Work Order: 0311068
Project: R-26

QC SUMMARY REPORT
Laboratory Control Spike Duplicate

Sample ID **LCSD-4697** Batch ID: **4697** Test Code: **SW1311/6010** Units: **mg/L** Analysis Date **11/21/2003 10:56:46 A** Prep Date **11/20/2003**

Client ID: Run ID: **ICP_031121A** SeqNo: **228325**

Analyte	Result	PQL	SPK value	SPK Ref Val	%REC	LowLimit	HighLimit	RPD Ref Val	%RPD	RPDLimit	Qual
Arsenic	0.456	5.0	0.5	0	91.2	80	120	0.4495	0	20	
Barium	0.4592	100	0.5	0	91.8	80	120	0.4528	0	20	
Cadmium	0.4507	1.0	0.5	0	90.1	80	120	0.4496	0	20	
Chromium	0.4723	5.0	0.5	0	94.5	80	120	0.4673	0	20	
Lead	0.4423	5.0	0.5	0	88.5	80	120	0.4434	0	20	
Selenium	0.4568	1.0	0.5	0	91.4	80	120	0.449	0	20	
Silver	0.4608	5.0	0.5	0.007017	90.8	80	120	0.4537	0	20	

Qualifiers:
ND - Not Detected at the Reporting Limit
J - Analyte detected below quantitation limits
S - Spike Recovery outside accepted recovery limits
R - RPD outside accepted recovery limits
B - Analyte detected in the associated Method Blank

Hall Environmental Analysis Laboratory

Sample Receipt Checklist

Client Name KLEIN | Date and Time Received: 11/10/2003

Work Order Number 0311068 | Received by AT

Checklist completed by _____ 11/10/03
Signature | Date

Matrix | Carrier name Client drop-off

Shipping container/cooler in good condition?	Yes ☑	No ☐	Not Present ☐	
Custody seals intact on shipping container/cooler?	Yes ☐	No ☐	Not Present ☐	Not Shipped ☑
Custody seals intact on sample bottles?	Yes ☐	No ☐	N/A ☑	
Chain of custody present?	Yes ☑	No ☐		
Chain of custody signed when relinquished and received?	Yes ☑	No ☐		
Chain of custody agrees with sample labels?	Yes ☐	No ☑		
Samples in proper container/bottle?	Yes ☑	No ☐		
Sample containers intact?	Yes ☑	No ☐		
Sufficient sample volume for indicated test?	Yes ☑	No ☐		
All samples received within holding time?	Yes ☑	No ☐		
Water - VOA vials have zero headspace?	No VOA vials submitted ☐	Yes ☑	No ☐	
Water - pH acceptable upon receipt?	Yes ☐	No ☐	N/A ☑	
Container/Temp Blank temperature?	14°	*4° C ± 2 Acceptable* If given sufficient time to cool.		

COMMENTS:

Client contacted _____ Date contacted: _____ Person contacted _____

Contacted by: _____ Regarding _____

Comments: _____

_____

_____

_____

_____

Corrective Action _____

_____

_____

CHAIN-OF-CUSTODY RECORD

Accreditation Applied: NELAC ☐ USACE ☐ Other: _____

HALL ENVIRONMENTAL ANALYSIS LABORATORY
4901 Hawkins NE, Suite D
Albuquerque, New Mexico 87109
Tel. 505.345.3975 Fax 505.345.4107
www.hallenvironmental.com

Client: Kleinfelder

Address: 8300 Jefferson NE
Suite 100
Albuquerque, NM 87113

Phone #: 344-7373

Fax #: 344-1711

Project Name: R-26

Project #:

Project Manager: Mark Everett

Sampler: John Carrillo

Sample Temperature: ~~57°~~ F 14°C

ANALYSIS REQUEST

Date	Time	Matrix	Sample I.D. No.	Number/Volume	Preservative H_gCl_2	Preservative HNO_3	Preservative	HEAL No.	BTEX + MTBE + TMB's (8021)	BTEX + MTBE + TPH (Gasoline Only)	TPH Method 8015B MOD (Gas/Diesel)	TPH (Method 418.1)	EDB (Method 504.1)	EDC (Method 8021)	8310 (PNA or PAH)	~~RCRA 8 Metals~~ Perchlorates	Cations (Na, K, Ca, Mg)	Anions (F, Cl, NO_3, NO_2, PO_4, SO_4)	8081 Pesticides / PCB's (8082)	8260 (VOA)	8270 (Semi-VOA)	Alpha, Beta, Gamma, Iron	Tritium	Metals	Air Bubbles or Headspace (Y or N)
11/10/03	1250	H_2O	R-26 pit A Amber	Amber 1 liter			X	0311068-1													X				
11/10/03	1250	H_2O	R-26 pit B Amber	Amber 1 liter			X												X						
11/10/03	1250	H_2O	R-26 pit C	40 ml	X															X					
11/10/03	1250	H_2O	R-26 pit D	40 ml	X															X					
11/10/03	1250	H_2O	R-26 pit E	40 ml	X															X					
11/10/03	1250	H_2O	R-26 pit F	Poly liter		X																X			
11/10/03	1250	H_2O	R-26 pit G	Poly liter		X																	X		
11/10/03	1250	H_2O	R-26 pit H	Poly liter		X																		X	
11/10/03	1250	H_2O	R-26 pit I	½ liter Poly			X									X									
11/10/03	1250	H_2O	R-26 pit J	½ liter Poly			X											X							
11/10/03	1250	H_2O	R-26 pit K	100 ml Poly			H_2SO_4																		
			Trip Blank					-2												X					

Date:	Time:	Relinquished By: (Signature)	Remarks:
11/10/03	1615	[signature]	Received by Anne Thorne 11/10/03
11/10/03	1250	Soil R26 Cuttings	3 Bgz 1615 -3

Remarks: -03 see list for soils per Bernie Bookisch

Hall Environmental Analysis Laboratory

DATE: *22-Dec-03*

Remit To: Hall Environmental Analysis
4901 Hawkins NE, Suite D
Albuquerque, New Mexico 87109-
Attn: Accounts Receivable
TEL: (505) 345-3975 FAX: (505) 345-4107

INVOICE

Invoice TO: Kleinfelder
8300 Jefferson, NE Suite B
Albuquerque, NM 87113
Attn:
Phone: (505) 344-7373

Work Order: 0311068
PO Number:
Delivery Order
Project Name R-21
Date Received 11/10/2003

Invoice No: 0311068

Invoice Date: 22-Dec-03
Payment Terms: Net 30 Days

Item	Remarks	Matrix	Qty	Unit Price	Mult	Quoted	Test Total
AQPREP LIQ-LIQ: PCB.		Aqueous	1	$0.00	1	$0.00	$0.00
AQPREP SEP FUNNEL: BNA		Aqueous	1	$0.00	1	$0.00	$0.00
EPA 8330: Explosives (Soil)		Soil	1	$225.00	1.75	$393.75	$393.75
EPA Method 300.0: Anions		Aqueous	1	$105.00	1	$105.00	$105.00
EPA Method 314.0: Perchlorate		Aqueous	1	$130.00	1	$130.00	$130.00
EPA Method 6010B: Metals		Aqueous	1	$220.00	1.75	$385.00	$385.00
EPA Method 6020: Dissolved		Aqueous	1	$220.00	1	$220.00	$220.00
EPA Method 8082: PCB's		Soil	1	$70.00	1	$70.00	$70.00
EPA Method 8082: PCB's		Aqueous	1	$70.00	1	$70.00	$70.00
EPA Method 8260B: VOLATILES		Soil	1	$100.00	1	$100.00	$100.00
EPA Method 8260B: VOLATILES		Aqueous	1	$0.00	1	$0.00	$0.00
EPA Method 8260B: VOLATILES		Aqueous	1	$100.00	1	$100.00	$100.00
EPA Method 8270D: Semivolatiles		Aqueous	1	$240.00	1	$240.00	$240.00
EPA Method 8270D: Semivolatiles		Soil	1	$240.00	1	$240.00	$240.00
Gamma CS-137			1	$95.00	1.5	$142.50	$142.50
Gamma CS-137			1	$96.00	1.75	$168.00	$168.00
Gross Alpha Activity		Aqueous	1	$90.00	1.5	$135.00	$135.00
Methanol Extraction		Solid	1	$0.00	1	$0.00	$0.00
PCB Prep Soxhlet		Soil	1	$0.00	1	$0.00	$0.00
PU 238,239 & AM 241			1	$500.00	1.75	$875.00	$875.00
SOPREP SOXHLET: BNA		Soil	1	$0.00	1	$0.00	$0.00
Strontium 90			1	$140.00	1.75	$245.00	$245.00
TCLP Metals		Waste	1	$190.00	1	$190.00	$190.00
Thorium 232			1	$142.00	1.75	$248.50	$248.50
Tritium			1	$120.00	1.75	$210.00	$210.00
Tritium			1	$80.00	1.5	$120.00	$120.00
Uranium 234,235,238			1	$142.00	1.75	$248.50	$248.50

Order TOTAL: $4,636.25

Invoice TO: Kleinfelder
8300 Jefferson, NE Suite B
Albuquerque, NM 87113
Attn:
Phone: (505) 344-7373

Work Order: 0311068
PO Number:
Delivery Order
Project Name R-21
Date Received 11/10/2003

Invoice No: 0311068

Invoice Date: 22-Dec-03
Payment Terms: Net 30 Days

Item	Remarks	Matrix	Qty	Unit Price	Mult	Quoted	Test Total

Discount: 0.00%
Sales Tax: 0.00%
Misc Charges: $0.00

Misc Comments

Subtotal: $4,636.25
Payment Received: $0.00

INVOICE Total $4,636.25

All invoices are due and payable net 30 days from receipt.

Hall Environmental Analysis Laboratory

COVER LETTER

December 05, 2003

Mark Everett
Kleinfelder
8300 Jefferson, NE Suite B
Albuquerque, NM 87113
TEL: (505) 344-7373
FAX (505) 344-1711

RE: R-26 Order No.: 0311068

Dear Mark Everett:

Hall Environmental Analysis Laboratory received 3 samples on 11/10/2003 for the analyses presented in the following report.

This is a preliminary report that contains incomplete data or data that has not been fully validated. Caution should be exercised in the use of any data presented as final reported results may not reflect the values presented.

If you have any questions regarding these test results, please feel free to call.

Hall Environmental Analysis Laboratory

Date: *05-Dec-03*

CLIENT: Kleinfelder
Lab Order: 0311068
Project: R-26
Lab ID: 0311068-01

Client Sample ID: R-26 pit
Collection Date: 11/10/2003 12:50:00 PM
Matrix: AQUEOUS

Analyses	Result	Limit	Qual	Units	DF	Date Analyzed
EPA METHOD 300.0: ANIONS						Analyst: **BDH**
Fluoride	0.21	0.10		mg/L	1	11/10/2003 10:16:48 PM
Chloride	2.4	0.10		mg/L	1	11/10/2003 10:16:48 PM
Nitrogen, Nitrite (As N)	ND	0.10		mg/L	1	11/10/2003 10:16:48 PM
Bromide	6.7	0.10		mg/L	1	11/10/2003 10:16:48 PM
Nitrogen, Nitrate (As N)	ND	0.10		mg/L	1	11/10/2003 10:16:48 PM
Phosphorus, Orthophosphate (As P)	ND	0.50		mg/L	1	11/10/2003 10:16:48 PM
Sulfate	49	0.50		mg/L	1	11/10/2003 10:16:48 PM
EPA METHOD 8082: PCB'S						Analyst: **GT**
Aroclor 1016	ND	1.0		µg/L	1	11/20/2003 10:20:09 AM
Aroclor 1221	ND	5.0		µg/L	1	11/20/2003 10:20:09 AM
Aroclor 1232	ND	1.0		µg/L	1	11/20/2003 10:20:09 AM
Aroclor 1242	ND	1.0		µg/L	1	11/20/2003 10:20:09 AM
Aroclor 1248	ND	1.0		µg/L	1	11/20/2003 10:20:09 AM
Aroclor 1254	ND	1.0		µg/L	1	11/20/2003 10:20:09 AM
Aroclor 1260	ND	1.0		µg/L	1	11/20/2003 10:20:09 AM
Surr: Decachlorobiphenyl	87.4	76-111		%REC	1	11/20/2003 10:20:09 AM
Surr: Tetrachloro-m-xylene	67.4	47-94		%REC	1	11/20/2003 10:20:09 AM
EPA METHOD 8260B: VOLATILES						Analyst: **JDC**
Benzene	ND	10		µg/L	10	11/11/2003
Toluene	13	10		µg/L	10	11/11/2003
Ethylbenzene	ND	10		µg/L	10	11/11/2003
Methyl tert-butyl ether (MTBE)	ND	10		µg/L	10	11/11/2003
1,2,4-Trimethylbenzene	ND	10		µg/L	10	11/11/2003
1,3,5-Trimethylbenzene	ND	10		µg/L	10	11/11/2003
1,2-Dichloroethane (EDC)	ND	10		µg/L	10	11/11/2003
1,2-Dibromoethane (EDB)	ND	10		µg/L	10	11/11/2003
Naphthalene	ND	20		µg/L	10	11/11/2003
1-Methylnaphthalene	ND	40		µg/L	10	11/11/2003
2-Methylnaphthalene	ND	40		µg/L	10	11/11/2003
Acetone	2100	100		µg/L	10	11/11/2003
Bromobenzene	ND	10		µg/L	10	11/11/2003
Bromochloromethane	ND	10		µg/L	10	11/11/2003
Bromodichloromethane	ND	10		µg/L	10	11/11/2003
Bromoform	ND	10		µg/L	10	11/11/2003
Bromomethane	ND	20		µg/L	10	11/11/2003
2-Butanone	ND	100		µg/L	10	11/11/2003
Carbon disulfide	ND	100		µg/L	10	11/11/2003
Carbon Tetrachloride	ND	10		µg/L	10	11/11/2003
Chlorobenzene	ND	10		µg/L	10	11/11/2003
Chloroethane	ND	20		µg/L	10	11/11/2003

Qualifiers:
ND - Not Detected at the Reporting Limit
J - Analyte detected below quantitation limit
B - Analyte detected in the associated Method Blank
* - Value exceeds Maximum Contaminant Level
S - Spike Recovery outside accepted recovery limits
R - RPD outside accepted recovery limits
E - Value above quantitation range

Hall Environmental Analysis Laboratory

Date: *05-Dec-03*

CLIENT: Kleinfelder
Lab Order: 0311068
Project: R-26
Lab ID: 0311068-01

Client Sample ID: R-26 pit
Collection Date: 11/10/2003 12:50:00 PM
Matrix: AQUEOUS

Analyses	Result	Limit	Qual	Units	DF	Date Analyzed
Chloroform	ND	10		µg/L	10	11/11/2003
Chloromethane	ND	10		µg/L	10	11/11/2003
2-Chlorotoluene	ND	10		µg/L	10	11/11/2003
4-Chlorotoluene	ND	10		µg/L	10	11/11/2003
cis-1,2-DCE	ND	10		µg/L	10	11/11/2003
cis-1,3-Dichloropropene	ND	10		µg/L	10	11/11/2003
1,2-Dibromo-3-chloropropane	ND	20		µg/L	10	11/11/2003
Dibromochloromethane	ND	10		µg/L	10	11/11/2003
Dibromomethane	ND	20		µg/L	10	11/11/2003
1,2-Dichlorobenzene	ND	10		µg/L	10	11/11/2003
1,3-Dichlorobenzene	ND	10		µg/L	10	11/11/2003
1,4-Dichlorobenzene	ND	10		µg/L	10	11/11/2003
Dichlorodifluoromethane	ND	10		µg/L	10	11/11/2003
1,1-Dichloroethane	ND	10		µg/L	10	11/11/2003
1,1-Dichloroethene	ND	10		µg/L	10	11/11/2003
1,2-Dichloropropane	ND	10		µg/L	10	11/11/2003
1,3-Dichloropropane	ND	10		µg/L	10	11/11/2003
2,2-Dichloropropane	ND	10		µg/L	10	11/11/2003
1,1-Dichloropropene	ND	10		µg/L	10	11/11/2003
Hexachlorobutadiene	ND	10		µg/L	10	11/11/2003
2-Hexanone	ND	100		µg/L	10	11/11/2003
Isopropylbenzene	ND	10		µg/L	10	11/11/2003
4-Isopropyltoluene	ND	10		µg/L	10	11/11/2003
4-Methyl-2-pentanone	ND	100		µg/L	10	11/11/2003
Methylene Chloride	ND	30		µg/L	10	11/11/2003
n-Butylbenzene	ND	10		µg/L	10	11/11/2003
n-Propylbenzene	ND	10		µg/L	10	11/11/2003
sec-Butylbenzene	ND	10		µg/L	10	11/11/2003
Styrene	ND	10		µg/L	10	11/11/2003
tert-Butylbenzene	ND	10		µg/L	10	11/11/2003
1,1,1,2-Tetrachloroethane	ND	10		µg/L	10	11/11/2003
1,1,2,2-Tetrachloroethane	ND	10		µg/L	10	11/11/2003
Tetrachloroethene (PCE)	ND	10		µg/L	10	11/11/2003
trans-1,2-DCE	ND	10		µg/L	10	11/11/2003
trans-1,3-Dichloropropene	ND	10		µg/L	10	11/11/2003
1,2,3-Trichlorobenzene	ND	10		µg/L	10	11/11/2003
1,2,4-Trichlorobenzene	ND	10		µg/L	10	11/11/2003
1,1,1-Trichloroethane	ND	10		µg/L	10	11/11/2003
1,1,2-Trichloroethane	ND	10		µg/L	10	11/11/2003
Trichloroethene (TCE)	ND	10		µg/L	10	11/11/2003
Trichlorofluoromethane	ND	10		µg/L	10	11/11/2003
1,2,3-Trichloropropane	ND	20		µg/L	10	11/11/2003

Qualifiers:

ND - Not Detected at the Reporting Limit
J - Analyte detected below quantitation limit
B - Analyte detected in the associated Method Blank
* - Value exceeds Maximum Contaminant Level
S - Spike Recovery outside accepted recovery limits
R - RPD outside accepted recovery limits
E - Value above quantitation range

Hall Environmental Analysis Laboratory

Date: *05-Dec-03*

CLIENT: Kleinfelder
Client Sample ID: R-26 pit
Lab Order: 0311068
Collection Date: 11/10/2003 12:50:00 PM
Project: R-26
Lab ID: 0311068-01
Matrix: AQUEOUS

Analyses	Result	Limit	Qual	Units	DF	Date Analyzed
Vinyl chloride	ND	20		µg/L	10	11/11/2003
Xylenes, Total	ND	10		µg/L	10	11/11/2003
Surr: 1,2-Dichloroethane-d4	96.4	70.6-124		%REC	10	11/11/2003
Surr: 4-Bromofluorobenzene	92.8	76.2-122		%REC	10	11/11/2003
Surr: Dibromofluoromethane	94.1	67.2-131		%REC	10	11/11/2003
Surr: Toluene-d8	107	82.1-123		%REC	10	11/11/2003
EPA METHOD 8270D: SEMIVOLATILES						Analyst: **CS**
Acenaphthene	ND	100		µg/L	1	11/14/2003
Acenaphthylene	ND	100		µg/L	1	11/14/2003
Aniline	ND	100		µg/L	1	11/14/2003
Anthracene	ND	100		µg/L	1	11/14/2003
Azobenzene	ND	100		µg/L	1	11/14/2003
Benz(a)anthracene	ND	100		µg/L	1	11/14/2003
Benzidine	ND	200		µg/L	1	11/14/2003
Benzo(a)pyrene	ND	100		µg/L	1	11/14/2003
Benzo(b)fluoranthene	ND	100		µg/L	1	11/14/2003
Benzo(g,h,i)perylene	ND	100		µg/L	1	11/14/2003
Benzo(k)fluoranthene	ND	100		µg/L	1	11/14/2003
Benzoic acid	ND	500		µg/L	1	11/14/2003
Benzyl alcohol	ND	200		µg/L	1	11/14/2003
Bis(2-chloroethoxy)methane	ND	100		µg/L	1	11/14/2003
Bis(2-chloroethyl)ether	ND	100		µg/L	1	11/14/2003
Bis(2-chloroisopropyl)ether	ND	100		µg/L	1	11/14/2003
Bis(2-ethylhexyl)phthalate	ND	100		µg/L	1	11/14/2003
4-Bromophenyl phenyl ether	ND	100		µg/L	1	11/14/2003
Butyl benzyl phthalate	ND	100		µg/L	1	11/14/2003
Carbazole	ND	100		µg/L	1	11/14/2003
4-Chloro-3-methylphenol	ND	200		µg/L	1	11/14/2003
4-Chloroaniline	ND	200		µg/L	1	11/14/2003
2-Chloronaphthalene	ND	100		µg/L	1	11/14/2003
2-Chlorophenol	ND	100		µg/L	1	11/14/2003
4-Chlorophenyl phenyl ether	ND	100		µg/L	1	11/14/2003
Chrysene	ND	100		µg/L	1	11/14/2003
Di-n-butyl phthalate	ND	100		µg/L	1	11/14/2003
Di-n-octyl phthalate	ND	100		µg/L	1	11/14/2003
Dibenz(a,h)anthracene	ND	100		µg/L	1	11/14/2003
Dibenzofuran	ND	100		µg/L	1	11/14/2003
1,2-Dichlorobenzene	ND	100		µg/L	1	11/14/2003
1,3-Dichlorobenzene	ND	100		µg/L	1	11/14/2003
1,4-Dichlorobenzene	ND	100		µg/L	1	11/14/2003
3,3'-Dichlorobenzidine	ND	100		µg/L	1	11/14/2003
Diethyl phthalate	ND	100		µg/L	1	11/14/2003

Qualifiers:
ND - Not Detected at the Reporting Limit
S - Spike Recovery outside accepted recovery limits
J - Analyte detected below quantitation limit
R - RPD outside accepted recovery limits
B - Analyte detected in the associated Method Blank
E - Value above quantitation range
* - Value exceeds Maximum Contaminant Level

Hall Environmental Analysis Laboratory

Date: *05-Dec-03*

CLIENT: Kleinfelder
Lab Order: 0311068
Project: R-26
Lab ID: 0311068-01

Client Sample ID: R-26 pit
Collection Date: 11/10/2003 12:50:00 PM
Matrix: AQUEOUS

Analyses	Result	Limit	Qual	Units	DF	Date Analyzed
Dimethyl phthalate	ND	100		µg/L	1	11/14/2003
2,4-Dichlorophenol	ND	100		µg/L	1	11/14/2003
2,4-Dimethylphenol	ND	100		µg/L	1	11/14/2003
4,6-Dinitro-2-methylphenol	ND	500		µg/L	1	11/14/2003
2,4-Dinitrophenol	ND	500		µg/L	1	11/14/2003
2,4-Dinitrotoluene	ND	100		µg/L	1	11/14/2003
2,6-Dinitrotoluene	ND	100		µg/L	1	11/14/2003
Fluoranthene	ND	100		µg/L	1	11/14/2003
Fluorene	ND	100		µg/L	1	11/14/2003
Hexachlorobenzene	ND	100		µg/L	1	11/14/2003
Hexachlorobutadiene	ND	100		µg/L	1	11/14/2003
Hexachlorocyclopentadiene	ND	100		µg/L	1	11/14/2003
Hexachloroethane	ND	100		µg/L	1	11/14/2003
Indeno(1,2,3-cd)pyrene	ND	100		µg/L	1	11/14/2003
Isophorone	ND	100		µg/L	1	11/14/2003
2-Methylnaphthalene	ND	100		µg/L	1	11/14/2003
2-Methylphenol	ND	100		µg/L	1	11/14/2003
3+4-Methylphenol	ND	100		µg/L	1	11/14/2003
N-Nitrosodi-n-propylamine	ND	100		µg/L	1	11/14/2003
N-Nitrosodiphenylamine	ND	100		µg/L	1	11/14/2003
Naphthalene	ND	100		µg/L	1	11/14/2003
2-Nitroaniline	ND	500		µg/L	1	11/14/2003
3-Nitroaniline	ND	500		µg/L	1	11/14/2003
4-Nitroaniline	ND	200		µg/L	1	11/14/2003
Nitrobenzene	ND	100		µg/L	1	11/14/2003
2-Nitrophenol	ND	100		µg/L	1	11/14/2003
4-Nitrophenol	ND	500		µg/L	1	11/14/2003
Pentachlorophenol	ND	500		µg/L	1	11/14/2003
Phenanthrene	ND	100		µg/L	1	11/14/2003
Phenol	ND	100		µg/L	1	11/14/2003
Pyrene	ND	100		µg/L	1	11/14/2003
Pyridine	ND	100		µg/L	1	11/14/2003
1,2,4-Trichlorobenzene	ND	100		µg/L	1	11/14/2003
2,4,5-Trichlorophenol	ND	100		µg/L	1	11/14/2003
2,4,6-Trichlorophenol	ND	100		µg/L	1	11/14/2003
Surr: 2,4,6-Tribromophenol	57.2	16.6-115		%REC	1	11/14/2003
Surr: 2-Fluorobiphenyl	47.4	37-95.7		%REC	1	11/14/2003
Surr: 2-Fluorophenol	39.3	9.54-89.8		%REC	1	11/14/2003
Surr: 4-Terphenyl-d14	68.0	47.9-115		%REC	1	11/14/2003
Surr: Nitrobenzene-d5	45.7	38-106		%REC	1	11/14/2003
Surr: Phenol-d6	31.5	10.7-63.4		%REC	1	11/14/2003

Qualifiers:

ND - Not Detected at the Reporting Limit
J - Analyte detected below quantitation limit
B - Analyte detected in the associated Method Blank
* - Value exceeds Maximum Contaminant Level
S - Spike Recovery outside accepted recovery limits
R - RPD outside accepted recovery limits
E - Value above quantitation range

Hall Environmental Analysis Laboratory

Date: *05-Dec-03*

CLIENT: Kleinfelder
Lab Order: 0311068
Project: R-26
Lab ID: 0311068-02

Client Sample ID: Trip Blank
Collection Date:
Matrix: TRIP BLANK

Analyses	Result	Limit	Qual	Units	DF	Date Analyzed
EPA METHOD 8260B: VOLATILES						Analyst: **JDC**
Benzene	ND	1.0		µg/L	1	11/11/2003
Toluene	ND	1.0		µg/L	1	11/11/2003
Ethylbenzene	ND	1.0		µg/L	1	11/11/2003
Methyl tert-butyl ether (MTBE)	ND	1.0		µg/L	1	11/11/2003
1,2,4-Trimethylbenzene	ND	1.0		µg/L	1	11/11/2003
1,3,5-Trimethylbenzene	ND	1.0		µg/L	1	11/11/2003
1,2-Dichloroethane (EDC)	ND	1.0		µg/L	1	11/11/2003
1,2-Dibromoethane (EDB)	ND	1.0		µg/L	1	11/11/2003
Naphthalene	ND	2.0		µg/L	1	11/11/2003
1-Methylnaphthalene	ND	4.0		µg/L	1	11/11/2003
2-Methylnaphthalene	ND	4.0		µg/L	1	11/11/2003
Acetone	ND	10		µg/L	1	11/11/2003
Bromobenzene	ND	1.0		µg/L	1	11/11/2003
Bromochloromethane	ND	1.0		µg/L	1	11/11/2003
Bromodichloromethane	ND	1.0		µg/L	1	11/11/2003
Bromoform	ND	1.0		µg/L	1	11/11/2003
Bromomethane	ND	2.0		µg/L	1	11/11/2003
2-Butanone	ND	10		µg/L	1	11/11/2003
Carbon disulfide	ND	10		µg/L	1	11/11/2003
Carbon Tetrachloride	ND	1.0		µg/L	1	11/11/2003
Chlorobenzene	ND	1.0		µg/L	1	11/11/2003
Chloroethane	ND	2.0		µg/L	1	11/11/2003
Chloroform	ND	1.0		µg/L	1	11/11/2003
Chloromethane	ND	1.0		µg/L	1	11/11/2003
2-Chlorotoluene	ND	1.0		µg/L	1	11/11/2003
4-Chlorotoluene	ND	1.0		µg/L	1	11/11/2003
cis-1,2-DCE	ND	1.0		µg/L	1	11/11/2003
cis-1,3-Dichloropropene	ND	1.0		µg/L	1	11/11/2003
1,2-Dibromo-3-chloropropane	ND	2.0		µg/L	1	11/11/2003
Dibromochloromethane	ND	1.0		µg/L	1	11/11/2003
Dibromomethane	ND	2.0		µg/L	1	11/11/2003
1,2-Dichlorobenzene	ND	1.0		µg/L	1	11/11/2003
1,3-Dichlorobenzene	ND	1.0		µg/L	1	11/11/2003
1,4-Dichlorobenzene	ND	1.0		µg/L	1	11/11/2003
Dichlorodifluoromethane	ND	1.0		µg/L	1	11/11/2003
1,1-Dichloroethane	ND	1.0		µg/L	1	11/11/2003
1,1-Dichloroethene	ND	1.0		µg/L	1	11/11/2003
1,2-Dichloropropane	ND	1.0		µg/L	1	11/11/2003
1,3-Dichloropropane	ND	1.0		µg/L	1	11/11/2003
2,2-Dichloropropane	ND	1.0		µg/L	1	11/11/2003
1,1-Dichloropropene	ND	1.0		µg/L	1	11/11/2003

Qualifiers:
ND - Not Detected at the Reporting Limit
J - Analyte detected below quantitation limit
B - Analyte detected in the associated Method Blank
* - Value exceeds Maximum Contaminant Level
S - Spike Recovery outside accepted recovery limits
R - RPD outside accepted recovery limits
E - Value above quantitation range

Hall Environmental Analysis Laboratory

Date: *05-Dec-03*

CLIENT: Kleinfelder
Client Sample ID: Trip Blank
Lab Order: 0311068
Collection Date:
Project: R-26
Lab ID: 0311068-02
Matrix: TRIP BLANK

Analyses	Result	Limit	Qual	Units	DF	Date Analyzed
Hexachlorobutadiene	ND	1.0		µg/L	1	11/11/2003
2-Hexanone	ND	10		µg/L	1	11/11/2003
Isopropylbenzene	ND	1.0		µg/L	1	11/11/2003
4-Isopropyltoluene	ND	1.0		µg/L	1	11/11/2003
4-Methyl-2-pentanone	ND	10		µg/L	1	11/11/2003
Methylene Chloride	ND	3.0		µg/L	1	11/11/2003
n-Butylbenzene	ND	1.0		µg/L	1	11/11/2003
n-Propylbenzene	ND	1.0		µg/L	1	11/11/2003
sec-Butylbenzene	ND	1.0		µg/L	1	11/11/2003
Styrene	ND	1.0		µg/L	1	11/11/2003
tert-Butylbenzene	ND	1.0		µg/L	1	11/11/2003
1,1,1,2-Tetrachloroethane	ND	1.0		µg/L	1	11/11/2003
1,1,2,2-Tetrachloroethane	ND	1.0		µg/L	1	11/11/2003
Tetrachloroethene (PCE)	ND	1.0		µg/L	1	11/11/2003
trans-1,2-DCE	ND	1.0		µg/L	1	11/11/2003
trans-1,3-Dichloropropene	ND	1.0		µg/L	1	11/11/2003
1,2,3-Trichlorobenzene	ND	1.0		µg/L	1	11/11/2003
1,2,4-Trichlorobenzene	ND	1.0		µg/L	1	11/11/2003
1,1,1-Trichloroethane	ND	1.0		µg/L	1	11/11/2003
1,1,2-Trichloroethane	ND	1.0		µg/L	1	11/11/2003
Trichloroethene (TCE)	ND	1.0		µg/L	1	11/11/2003
Trichlorofluoromethane	ND	1.0		µg/L	1	11/11/2003
1,2,3-Trichloropropane	ND	2.0		µg/L	1	11/11/2003
Vinyl chloride	ND	2.0		µg/L	1	11/11/2003
Xylenes, Total	ND	1.0		µg/L	1	11/11/2003
Surr: 1,2-Dichloroethane-d4	96.2	70.6-124		%REC	1	11/11/2003
Surr: 4-Bromofluorobenzene	89.1	76.2-122		%REC	1	11/11/2003
Surr: Dibromofluoromethane	95.4	67.2-131		%REC	1	11/11/2003
Surr: Toluene-d8	105	82.1-123		%REC	1	11/11/2003

Qualifiers:
ND - Not Detected at the Reporting Limit
J - Analyte detected below quantitation limit
B - Analyte detected in the associated Method Blank
* - Value exceeds Maximum Contaminant Level
S - Spike Recovery outside accepted recovery limits
R - RPD outside accepted recovery limits
E - Value above quantitation range

Environmental Health Laboratories
The Nation's Drinking Water Laboratory

110 S. Hill Street
South Bend, IN 46617
574.233.4777
800.332.4345
Fax: 574.233.8207
www.ehl.cc

LABORATORY REPORT

Client: Hall Environmental
Attn: Andy Freeman
4901 Hawkins NE
Suite A
Albuquerque, NM 87109

Report#: 966062

Priority: Standard Written

Status: Final

Project/Site: R-26 pit / 0311068-01E

Samples Submitted: One groundwater sample

Copies to: None

Collected: 11/10/03 By: Client Received: 11/12/03

REPORT SUMMARY

One groundwater sample was submitted for perchlorate analysis.

Note: Sample container was provided by the client.

Detailed quantitative results are presented on the following page.

We appreciate the opportunity to provide you with this analysis. If you have any questions concerning this report, please do not hesitate to call us at (574) 233-4777.

Note: This report may not be reproduced, except in full, without written approval from Environmental Health Laboratories (EHL). EHL is accredited by the National Environmental Laboratory Accreditation Program (NELAP). This report satisfies the requirements of your project but has not been prepared to comply with NELAP reporting requirements.

REVIEWED BY: William Reeves Reporting Manager DATE: 11/21/03

FINALIZED BY: [signature] DATE: 11-21-03

A Division of Underwriters Laboratories Inc.

Client: Hall Environmental

Report#: 966062

PERCHLORATE — Groundwater

Lab#	Sampling Point	MRL	Results
966062	R-26 pit / 0311068-01E	4.0	< 400 † ug/L

Analyzed: 11/14/03 Analyst: NB Method: 314.0

† Result presented is based upon a dilution factor of 100, due to poor sample matrix.

A Division of Underwriters Laboratories Inc.

REFERENCES AND DEFINITIONS OF TERMS

General Chemistry

References: 1. EPA-600/4-79-020
Methods for Chemical Analysis of Water and Wastes
2. Standard Methods For the Examination of Water and Wastewater
Vol. 19, 1995

MRL = EHL's Minimum Reporting Limit

Results: Values presented in the result column represent the lowest reportable value for a parameter after correcting for all sample dilutions.

< = "less than." This number is the lowest reportable value by the procedure used for analysis after factoring in all dilutions.

√ = If dilutions were required for quantitation of specific parameters, they are indicated by a (√) preceding the result.

1 ug/L = 1 microgram per liter (ug/L) = 1 part per billion

A Division of Underwriters Laboratories Inc.

ENERGY LABORATORIES, INC. *2393 Salt Creek Highway (82601)* P.O. Box 3258 * Casper, WY 82602
Toll Free 888.235.0515 * 307.235.0515 * Fax 307.234.1639 * casper@energylab.com

LABORATORY ANALYTICAL REPORT

Client: Hall Environmental
Project: Not Indicated
Lab ID: C03110337-001
Client Sample ID: R-26 Pit 0311068-01D

Report Date: 12/04/03
Collection Date: 11/10/03 12:50
Date Received: 11/11/03
Matrix: Aqueous

Analyses	Result	Units	Qual	RL	MCL/ QCL	Method	Analysis Date / By
MAJOR IONS							
Calcium	10.1	mg/L		1.0		E200.7	11/12/03 18:33 cp
Magnesium	2.2	mg/L		1.0		E200.7	11/12/03 18:33 cp
Potassium	4.4	mg/L		1.0		E200.7	11/12/03 18:33 cp
Sodium	69.4	mg/L		1.0		E200.7	11/12/03 18:33 cp
METALS - DISSOLVED							
Aluminum	7.23	mg/L		0.001		E200.8	11/22/03 02:14 smd
Antimony	0.004	mg/L		0.001		E200.8	11/22/03 02:14 smd
Arsenic	0.031	mg/L	D	0.002		E200.8	11/22/03 02:14 smd
Barium	0.100	mg/L		0.001		E200.8	11/22/03 02:14 smd
Beryllium	ND	mg/L		0.001		E200.8	12/02/03 18:41 smd
Cadmium	ND	mg/L		0.001		E200.8	11/22/03 02:14 smd
Chromium	0.003	mg/L	D	0.002		E200.8	11/22/03 02:14 smd
Cobalt	ND	mg/L		0.001		E200.8	11/22/03 02:14 smd
Copper	0.029	mg/L		0.001		E200.8	11/22/03 02:14 smd
Iron	1.08	mg/L		0.030		E200.7	11/12/03 18:33 cp
Lead	0.011	mg/L		0.001		E200.8	11/22/03 02:14 smd
Manganese	0.072	mg/L		0.001		E200.8	11/22/03 02:14 smd
Mercury	0.001	mg/L		0.001		E200.8	11/22/03 02:14 smd
Nickel	ND	mg/L		0.001		E200.8	11/22/03 02:14 smd
Selenium	ND	mg/L	D	0.005		E200.8	11/22/03 02:14 smd
Silver	0.009	mg/L		0.001		E200.8	11/22/03 02:14 smd
Thallium	ND	mg/L		0.001		E200.8	11/22/03 02:14 smd
Vanadium	0.005	mg/L		0.001		E200.8	11/22/03 02:14 smd
Zinc	0.135	mg/L		0.001		E200.8	11/22/03 02:14 smd
RADIONUCLIDES - TOTAL							
Gross Alpha	10.7	pCi/L		1.0		E900.0	11/17/03 09:00 rs
Gross Alpha precision (±)	1.0	pCi/L				E900.0	11/17/03 09:00 rs
Gross Gamma	ND	pCi/L		20.0		E901.1	11/13/03 09:38 db
Tritium	ND	pCi/L		1200		E906.0	11/12/03 12:00 db

Report Definitions:
RL - Analyte reporting limit.
QCL - Quality control limit.
D - RL increased due o sample matrix interference.
MCL - Maximum contaminant level.
ND - Not detected a he reporting limit.

QA/QC Summary Report

Client: Hall Environmental
Project: Not Indicated

Report Date: 12/04/03
Work Order: C03110337

Analyte	Result	Units	RL	%REC	Low Limit	High Limit	RPD	RPDLimit	Qual
Method: E200.7									Batch: 4581
Sample ID: C03110365-001CMS1	Matrix Spike								11/12/03 17:57
Calcium	766	mg/L	1.00	99.5	80	120			
Magnesium	528	mg/L	1.00	96.3	80	120			
Potassium	504	mg/L	1.00	94.8	80	120			
Sodium	541	mg/L	1.00	88.7	80	120			
Sample ID: C03110365-001CMSD1	Matrix Spike Duplicate								11/12/03 18:05
Calcium	763	mg/L	1.00	98.9	80	120	0.4	20	
Magnesium	528	mg/L	1.00	96.3	80	120	0	20	
Potassium	507	mg/L	1.00	95.4	80	120	0.6	20	
Sodium	543	mg/L	1.00	89.1	80	120	0.4	20	
Method: E200.8									Batch: 4581
Sample ID: C03110534-001BMS	Matrix Spike								11/21/03 23:09
Antimony	0.534	mg/L	0.00100	106	70	130			
Arsenic	0.456	mg/L	0.00200	91.2	70	130			
Barium	0.567	mg/L	0.00100	109	70	130			
Beryllium	0.383	mg/L	0.00100	75.7	70	130			
Cadmium	0.468	mg/L	0.00100	91.7	70	130			
Chromium	0.509	mg/L	0.00200	102	70	130			
Cobalt	0.548	mg/L	0.00100	99.3	70	130			
Copper	0.520	mg/L	0.00100	87.6	70	130			
Lead	0.530	mg/L	0.00100	106	70	130			
Mercury	0.0543	mg/L	0.00100	109	70	130			
Nickel	0.621	mg/L	0.00100	83.2	70	130			
Thallium	0.531	mg/L	0.00100	106	70	130			
Vanadium	0.536	mg/L	0.00100	106	70	130			
Sample ID: C03110534-001BMSD	Matrix Spike Duplicate								11/21/03 23:14
Antimony	0.516	mg/L	0.00100	103	70	130	3.4	20	
Arsenic	0.450	mg/L	0.00200	90	70	130	1.3	20	
Barium	0.562	mg/L	0.00100	108	70	130	0.9	20	
Beryllium	0.367	mg/L	0.00100	72.5	70	130	4.3	20	
Cadmium	0.455	mg/L	0.00100	89.2	70	130	2.8	20	
Chromium	0.511	mg/L	0.00200	102	70	130	0.4	20	
Cobalt	0.545	mg/L	0.00100	98.7	70	130	0.5	20	
Copper	0.504	mg/L	0.00100	84.4	70	130	3.1	20	
Lead	0.522	mg/L	0.00100	104	70	130	1.5	20	
Mercury	0.0551	mg/L	0.00100	110	70	130	1.5	20	
Nickel	0.597	mg/L	0.00100	78.4	70	130	4.0	20	
Thallium	0.522	mg/L	0.00100	104	70	130	1.7	20	
Vanadium	0.530	mg/L	0.00100	105	70	130	1.2	20	

Qualifiers: RL - Analyte reporting limit. ND - Not detected a he reporting limit.

QA/QC Summary Report

Client: Hall Environmental
Project: Not Indicated

Report Date: 12/04/03
Work Order: C03110337

Analyte	Result	Units	RL	%REC	Low Limit	High Limit	RPD	RPDLimit	Qual
Method: E900.0									Batch: R28843
Sample ID: C03110308-001A	Matrix Spike								11/17/03 09:00
Gross Alpha	445	pCi/L	1.00	91.6	70	130			
Sample ID: C03110308-001A	Matrix Spike Duplicate								11/17/03 09:00
Gross Alpha	419	pCi/L	1.00	86.3	70	130	5.9	30	
Sample ID: MB-R28843	Method Blank								11/17/03 09:00
Gross Alpha	ND	pCi/L	1.00						
Sample ID: LCS-R28843	Laboratory Control Spike								11/17/03 09:00
Gross Alpha	454	pCi/L	1.00	93.4	70	130			
Method: E901.1									Batch: R28507
Sample ID: LCS-R28507	Laboratory Control Spike								11/13/03 09:38
Gross Gamma	616000	pCi/L	20.0	95.4	70	130			
Sample ID: MB-R28507	Method Blank								11/13/03 09:38
Gross Gamma	ND	pCi/L	20.0						
Sample ID: C03110337-001ADUP	Sample Duplicate								11/13/03 09:38
Gross Gamma	ND	pCi/L	20.0				0	30	
Method: E906.0									Batch: R28499
Sample ID: C03110337-001BMS	Matrix Spike								11/12/03 12:00
Tritium	2000	pCi/L	1200	88.2	70	130			
Sample ID: C03110337-001BMSD	Matrix Spike Duplicate								11/12/03 12:00
Tritium	1900	pCi/L	1200	82.4	70	130	6.9	30	
Sample ID: MB-R28499	Method Blank								11/12/03 12:00
Tritium	ND	pCi/L	1200						

Qualifiers: RL - Analyte reporting limit. ND - Not detected a he reporting limit.

CHAIN-OF-CUSTODY RECORD

Accreditation Applied: NELAC ☐ USACE ☐ Other: _____

HALL ENVIRONMENTAL ANALYSIS LABORATORY
4901 Hawkins NE, Suite D
Albuquerque, New Mexico 87109
Tel. 505.345.3975 Fax 505.345.4107
www.hallenvironmental.com

Client: Kleinfelder
Address: 8300 Jefferson NE Suite 100 Albuquerque, NM 87113
Phone #: 344-7373
Fax #: 344-1711

Project Name: R-26
Project #:
Project Manager: Mark Everett
Sampler: John Carrillo
Sample Temperature: ~~37~~ F 14°

Date	Time	Matrix	Sample I.D. No.	Number/Volume	Preservative H_gCl_2	Preservative HNO_3	Preservative	HEAL No.
11/10/03	1250	H_2O	R-26 pit A Amber	Amber 1 liter			X	03 1068-1
11/10/03	1250	H_2O	R-26 pit B Amber	Amber 1 liter			X	
11/10/03	1250	H_2O	R-26 pit C	40 ml	X			
11/10/03	1250	H_2O	R-26 pit D	40 ml	X			
11/10/03	1250	H_2O	R-26 pit E	40 ml	X			
11/10/03	1250	H_2O	R-26 pit F	Poly liter		X		
11/10/03	1250	H_2O	R-26 pit G	Poly liter		X		
11/10/03	1250	H_2O	R-26 pit H	Poly liter		X		
11/10/03	1250	H_2O	R-26 pit I	½ liter Poly			X	
11/10/03	1250	H_2O	R-26 pit J	½ liter Poly			X	
11/10/03	1250	H_2O	R-26 pit K	100 ml Poly			H_2SO_4	
			Trip Blank					-2

Date	Time	Relinquished By: (Signature)	Remarks:	
11/10/03	1615		Received by: Connie Thorne	11/10/03
Date:	Time:	Relinquished By: (Signature)	Remarks:	
11/10/03	1825	Soil R26 Cuttings	3 BOZ	1615 -3

ANALYSIS REQUEST

BTEX + MTBE + TMB's (8021)	BTEX + MTBE + TPH (Gasoline Only)	TPH Method 8015B MOD (Gas/Diesel)	TPH (Method 418.1)	EDB (Method 504.1)	EDC (Method 8021)	8310 (PNA or PAH)	~~RCRA~~ 8 Metals (Uranium)	Cations (Na, K, Ca, Mg)	Anions (F, Cl, NO_3, NO_2, PO_4, SO_4)	8081 Pesticides / PCB's (8082)	8260 (VOA)	8270 (Semi-VOA)	Alpha, Beta, Gamma, Total Uranium	Tritium	Metals	Air Bubbles or Headspace (Y or N)
												X				
										X		X				
											X					
											X					
											X					
													X			
														X		
															X	
							X									
									X							
											X					

Remarks: -03 see list for soils per Bonnie Bockisch

Appendix H

Activities Planned for Well R-26
Compared with Work Performed

Appendix H

Activities Planned for Well R-26 Compared with Work Performed

Activity	"Hydrogeologic Workplan" (LANL 1998, 59599)	R-26 SAP (LANL 2003)	R-26 Actual Work
Planned Depth	100 to 500 ft into the regional aquifer	1414 ft TD of approximately 100 ft through regional water table. Regional water table expected at ~1314 ft.	Total drill depth 1485' ft bgs
Drilling Method	Methods may include, but are not limited to HSA, air-rotary/Odex/Stratex, air-rotary/Barber rig, and mud-rotary drilling	Fluid-assisted, open-hole, air -rotary drilling	Fluid-assisted, open-hole, air- rotary, air-rotary casing hammer and mud rotary drilling
Amount of Core	10% of the borehole	In R-26, the core target depth is 250 ft.	Total core depth 250 ft bgs, through 60 ft of alluvium and 190 ft into the Tshirege Member of the Bandelier Tuff
Lithologic Log	Log to be prepared from core, cuttings and drilling performance	Log to be prepared from core, cuttings, geophysical logs and drilling performance	Same as SAP. Note that the log was prepared from core samples to a depth of 105 ft bgs.
Number of Water Samples Collected for Contaminant Analysis	A water sample may be collected from each saturated zone, five zones assumed. The number of sampling events after well completion is not specified.	If perched water is encountered within the unsaturated zone, one groundwater sample will be collected within up to three perched zones. Groundwater samples will be collected within the regional aquifer at the regional water table and at the borehole TD, if feasible.	One water samples was obtained from the shallow perched zone at 240 ft bgs in the core hole. Two samples were collected from the water zone at 604 ft bgs in the deep borehole.
Water Sample Analysis	Initial sampling: radiochemistry I, II, and III, ^{3}H, general inorganics, stable isotopes, VOCs, and metals. Saturated zones: radionuclides (tritium, strontium-90, cesium-137, americium-241, plutonium isotopes, uranium isotopes, gamma spectrometry, and gross alpha, gross beta, and gross gamma), stable isotopes (hydrogen, oxygen, and in special cases nitrogen), major ions (cations and anions), trace metals, and trace elements.	Groundwater will be analyzed for perchlorate, low-detection tritium, gamma spectroscopy, americium-241; plutonium-238; plutonium-239, 240, strontium-90; technetium-99; uranium-234; uranium-235; uranium-238; bromide, chloride, fluoride, nitrate, nitrite, oxalate, phosphate, sulfate, uranium, target analyte list metals, and stable isotopes of hydrogen, oxygen, and nitrogen.	Same as SAP
Water Sample Field Measurements	Alkalinity, pH, specific conductance, temperature, turbidity	Carbonate alkalinity, pH, specific conductance, temperature, turbidity	pH, specific conductance, temperature, turbidity
Number of Core/Cuttings Samples Collected for Contaminant Analysis	Twenty samples of core or cuttings to be analyzed for potential contaminant identification in each borehole.	A minimum of two samples will be collected from each saturated zone encountered during drilling, if possible.	Samples core/cuttings were submitted for analysis from Thirteen intervals.
Cuttings/Core Sample Analytes	Uppermost sample to be analyzed for a full range of compounds: deeper samples will be analyzed for the presence of radiochemistry I, II, and III analytes, tritium (low and high detection levels), and metals. Four samples to be analyzed for VOCs.	Bromine, chlorine, fluorine, iodine, nitrate, nitrite, oxalate, phosphate, sulfate, perchlorate, arsenic, strontium, uranium, aluminum, calcium, iron, magnesium, manganese, sodium, potassium $^{18}O/^{16}O$ $^{2}H/^{1}H$ nitrogen, isotopes tritium americium-241 plutonium-238 plutonium-239,240 strontium-90 technetium-99 uranium-234 uranium-235	Same as SAP

Appendix H

Activities Planned for Well R-26 Compared with Work Performed

Activity	"Hydrogeologic Workplan" (LANL 1998, 59599)	R-26 SAP (LANL 2003)	R-26 Actual Work
		uranium-238 gamma spectroscopy	
Laboratory Hydraulic-Property Tests	Physical properties analyses will be conducted on 5 core samples and will typically include: moisture content, porosity, particle density, bulk density, saturated hydraulic conductivity, and water retention characteristics.	Up to 8 samples to be selected for laboratory hydraulic testing. In addition, core will be sampled for anions, moisture content and stable isotopes at 13 depths, from 10 to 250 ft bgs, to estimate recharge rates.	Same as SAP
Geology	Ten samples of core or cuttings will be collected for petrographic, X-ray fluorescence (XRF) and X-ray diffraction (XRD) analyses	The geology task leader will determine the number of samples for characterization of mineralogy, petrography, and geochemistry based on geologic and hydrologic conditions encountered during drilling.	Seven samples characterized for mineralogy, petrography, and rock chemistry
Geophysics	In general, open-hole geophysics includes caliper, electromagnetic induction, natural gamma, magnetic susceptibility, borehole color videotape (axial and sidescan), fluid temperature (saturated), single-point resistivity (saturated), and spontaneous potential (saturated). In general, cased-hole geophysics includes: gamma-gamma density, natural gamma, and thermal neutron.	Typical wireline logging service as planned: open-hole geophysics includes array induction imager, triple lithodensity, combinable magnetic resonance tool, natural gamma, natural gamma ray spectrometry, epithermal compensated neutron log, caliper, full-bore formation microimager, elemental capture spectrometer and borehole video. In general, cased-hole geophysics includes triple lithodensity, natural gamma, natural gamma spectrometry, epithermal compensated neutron log, elemental capture spectrometer.	Compensated Neutron Tool: *Cased 500 – 1005 ft bgs* *Open 70 –985 ft bgs, 1005 – 1481 ft bgs* Triple Litho-Density: *Cased 500 – 1005 ft bgs* *Open 70 –985 ft bgs, 1005 – 1481 ft bgs* Array Induction Tool: *Cased 500 – 1005 ft bgs* *Open 70 –979 ft bgs, 1005 – 1476 ft bgs* Elemental Capture Spectroscopy: *Cased 500 – 1005 ft bgs* *Open 70 –981 ft bgs, 1005 – 1477 ft bgs* Natural Gamma Spectroscopy: *Cased 500 – 1005 ft bgs* *Open 70 –979 ft bgs, 1005 – 1460 ft bgs* Combinable Magnetic Resonance: *Open 100 –967 ft bgs, 1050 – 1464 ft bgs* Full-bore Formation Micro Imager: *Open 450 –985 ft bgs, 1005 – 1483 ft bgs*
Water-Level Measurements	Procedures and methods not specified in "Hydrogeologic Workplan"	Water levels will be determined for each saturated zone by water-level meter or by pressure transducer.	Water level meter (sounder) used to measure zones of perched saturation and the regional water table
Field Hydraulic-Property Tests	Not specified in hydrogeologic work plan	Slug or pumping tests may be conducted in saturated intervals once the well is completed.	Pending
Shallow Piezometers	Not specified in hydrogeologic work plan	Not specified in SAP	Two piezometers were installed in the core borehole at depths of 250 and 180 ft bgs.
Surface Casing	Approximately 20-in. outer diameter (O.D.) extends from land surface to 10-ft depth in underlying competent layer and grouted in place.	18-in. OD schedule 40, low carbon steel casing will be installed as deep as possible below ground level (nominally 35-40 ft bgs) and will extend approx 3 ft above the ground surface and cemented into place.	13 ⅜-in. OD steel casing set at 70' and 9 ⅝-in. OD steel casing set from 0 to 1005 ft bgs, removed during well construction
Minimum Well Casing Size	6.625-in. O.D.	5-in. O.D. x 4.5-in. ID	5-in. OD (4.46-in. ID) stainless steel casing with external couplings
Well Screen	Machine-slotted (0.01-in) stainless-steel screens with flush-jointed	Well screen shall be constructed with multiple sections of 5.56-in. O.D. pipe	5.27-in. OD, rod-based stainless-steel screen with a 0.020-in. slot size on

Appendix H

Activities Planned for Well R-26 Compared with Work Performed

Activity	"Hydrogeologic Workplan" (LANL 1998, 59599)	R-26 SAP (LANL 2003)	R-26 Actual Work
	threads; number and length of screens to be determined on a site-specific basis and proposed to NMED	based stainless-steel screen, with a 0.02-in. slot size	the lower screen and 0.010-in. slot size on the upper screen.
Sump	Stainless-steel casing with an end cap	5-in-diameter stainless steel casing, 30 ft long.	5-in. OD stainless-steel casing, 34 ft long, with end cap.
Backfill	Uncontaminated drill cuttings below sump and bentonite above sump	A bentonite chip and sand mix will be used to fill the annulus to within 75 ft of ground surface. The mix will be hydrated in place every 100 ft. Cement with 2% bentonite will be used to fill the remaining annulus.	A 75:25 mix of 10/20 sand and bentonite chips placed from TD to 5 ft below bottom of the lower screen (1450 ft bgs) and from 1012 ft bgs to 10 ft below bottom of upper screen (672 ft bgs)
Filter Material	>90% silica sand, properly sized for the 0.010-in. slot size of the well screen; extends 2 ft above and below the well screen	A bentonite seal will be placed below each screened interval and allowed to hydrate for 1 hr to prevent mixing. A two-foot interval of fine-grained (30/70) transition sand will be placed above and below each primary filter pack. The primary filter pack (20/40 sand) will extend from 5 ft below each screened interval to 5 ft above.	For Screen #2, primary filter pack constructed of 10/20 silica sand placed 5 ft below and 11 ft above the screen. For Screen #1, primary filter pack constructed of 10/20 silica sand placed 2 ft below and 32 ft above the screen. Secondary filter pack constructed of 20/40 silica sand placed to 3-ft above primary filter pack of lower screen (1408 ft bgs) and to 2-ft (618 ft bgs) above primary filter pack of upper screen.
Transition Seal	N/A*	N/A	A 67% to 33% mixture of 10/20 silica sand and ⅜ in. bentonite chips from 1408 ft bgs to 1111 ft bgs
Bentonite Seal	N/A	N/A	⅜-in. bentonite chips placed from 1479 ft bgs to 1450 ft bgs (5 ft below Screen #2) ⅜-in. bentonite chips placed from 1012 ft bgs to 672 ft bgs between screens (2 ft below Screen #1) ⅜-in. bentonite chips placed from 618 ft bgs to 70 ft bgs
Concrete Backfill	N/A	N/A	2,500 psi concrete with 4% bentonite from 70 ft bgs to near surface

* N/A – Not specified in the two referenced documents.