Environmental Restoration
University of California
Environmental Restoration Project, MS M992
Los Alamos, New Mexico 87545
505-667-0808/FAX 505-665-4747

U. S. Department of Energy
Los Alamos Area Office, MS A316
Environmental Restoration Program
Los Alamos, New Mexico 87544
505-667-7203/FAX 505-665-4504

JUL 1998
RECEIVED

Date: July 31, 1998
Refer to: EM/ER:98-254

Dr. Robert S. Dinwiddie
NMED-HRMB
P.O. Box 26110
Santa Fe, NM 87502

SUBJECT: RESPONSE TO REQUEST FOR SUPPLEMENTAL INFORMATION ON THE IA PLAN FOR TA-21, PRS 21-024(i) (FORMER OU 1106, FU 1)

Dear Dr. Dinwiddie:

Enclosed is the Los Alamos National Laboratory's response to the New Mexico Environment Department Hazardous and Radioactive Materials Bureau's (NMED-HRMB) request for supplemental information (RSI) on the Interim Action Plan for Technical Area 21, Potential Release Site 21-024(i). The RSI was received on June 24, 1998. A meeting with NMED-HRMB personnel was held on July 22, 1998 to discuss the RSI. At that meeting an extension for this response was granted for July 31, 1998.

If you have any questions, please contact Dave McInroy at (505) 667-0819 or Joe Mose at (505) 667-5808.

Sincerely,

James M. Ray for
Julie A. Canepa, Program Manager
LANL/ER Project

Sincerely,

Joy C. Vall
Theodore J. Taylor, Program Manager
DOE/LAAO

JC/TT/dm

Enclosure: Response to RSI on the RFI Report for TA-21 (Former OU 1106, FU 1)

LANL
1 / 1106 / 21

An Equal Opportunity Employer/Operated by the Univers

10341

Cy (w/enc.):
J. Mose, LAAO, MS A316
D. Neleigh, EPA, R.6, 6PD-N
J. Newlin, CST-7, MS M992
C. Rodriguez, CIO/ER, MS M992
G. McMath, EM/ER, MS E525
A. Pratt, EES-13, MS M992
T. Taylor, LAAO, MS A316
T. Trujillo, AL-ERD, MS A906
J. White, ESH-19, MS K490
B. Garcia, NMED-HRMB
M. Leavitt, NMED-GWQB
J. Parker, NMED-OB
G. Saums, NMED-SWQB
S. Yanicak, NMED-AIP, MS J993
EM/ER File (CT# C493), MS M992
RPF, MS M707

Information Only (w/o enc.):
T. Baca, EM, MS J591
T. George, EM/ER, MS M992
T. Longo, DOE-HQ, EM-453
D. McInroy, EM/ER, MS M992
J. Plum, LAAO, MS A316
S. Rae, ESH-18, MS K497
G. Rael, AL-ERD, MS A906
J. Vozella, LAAO, MS A316
EM/ER File, MS M992

Request for
Supplemental Information Concerning the Interim Action Plan
for Potential Release Site 21-024(i),
Los Alamos National Laboratory, NM0890010516

INTRODUCTION

To facilitate review of this response, NMED's comments are included verbatim. The comments are divided into general and specific categories as presented in the letter. LANL's responses follow each NMED comment. As agreed upon during the meeting with NMED on July 22, 1998, additional attachments to this response have been prepared and will be submitted with this response.

GENERAL COMMENTS

NMED Comment

1. *Los Alamos National Laboratory and the Department of Energy (LANL/DOE)proceeded at risk with field activities in January of 1997 after submitting the Sampling and Analysis Plan (SAP) for Potential Release Site (PRS)21-024(i). In July of 1997, RPMP submitted a request for supplemental information (RSI) for PRS 21-024(c,i) and 21-027(a). LANL/DOE responded in part to the RSI comments for 21-024(i) by stating "The sampling analysis plan (SAP) for 21-024(i) has been implemented at risk." In the RSI response, LANL proposes that NMED's comments will be addressed in the proposed voluntary corrective action (VCA) plan and subsequent VCA Report to be submitted to NMED. RPMP has several issues*

   LANL/DOE has not submitted a report pertaining to the implementation of the unapproved SAP to RPMP. LANL/DOE should submit this report prior to any further activity at PRS 21-024(i).

   LANL/DOE proposed that a VCA plan and report be submitted to RPMP, not an Interim Action (IA) plan. LANL/DOE should provide the rationale for the change.

   RPMP believes a final remedy (VCA) may be more appropriate and cost-effective for PRS 21-024(i) at this time and requests that LANL/DOE reconsider this approach.

LANL Response

1. During the at-risk implementation of the Phase II sampling and analysis plan (SAP), it was obvious that the contamination levels detected warranted a more aggressive approach. It was at this point that LANL/DOE decided a removal of at least a portion of the source term was warranted based on (at a minimum) the LANL/DOE as low as reasonably achievable (ALARA) guidelines. This removal would accomplish a reduction of risk to human health and the environment for the radioactive contaminants. In addition, a significant portion of the non-radioactive contaminant source term would be removed.

Therefore, the SAP has been only partially implemented at this time. The sample locations are presented on revised Figure 9.1-1, attached to this response, and the highest values from the data collected from the portion of the SAP that was performed are presented in figures 9.1-2 and 9.1-3 and Table 1, also attached. The figures and table provided have been revised from those presented in the interim action plan to include additional information and corrections that help clarify the current conditions at the site. The attachments also provide information requested during a meeting between NMED and LANL/DOE on July 22, 1998.

During the initial preparation of the voluntary corrective action (VCA) plan, it became obvious that a VCA was not possible at this time because the VCA definition requires a final remedy. An interim action was determined to be the best option for the site given the uncertainty surrounding other regulatory issues that needed to be addressed to implement a final remedy at this site. The following paragraph describes each issue that has been identified that precludes implementing a final remedy at the site at this time.

The interim action, rather than a voluntary corrective action, is being done because (1) ecological assessment methodology has not been finalized; therefore, an integrated No Further Action (NFA) determination cannot be obtained; (2) complete removal of the inactive inlet pipe is not feasible at this time because of operational concerns involving existing active utility lines; and (3) resolution of surface water concerns where contamination in soil must be assessed regarding its impact on surface water quality has not occurred.

LANL/DOE proposes that, following the interim action, a VCA is the next logical step at this site to implement the final remedy. Given the need to prepare a VCA plan that accounts for the changes in the site conditions resulting from the interim action, LANL/DOE would like to withdraw the unapproved Phase II SAP that was submitted to the NMED. After the interim action has been completed and the resulting new data are available, LANL/DOE would like to include additional data requirements and data quality objectives in a VCA plan that will address the updated regulatory requirements that are not addressed in the existing Phase II SAP. These additional elements will allow LANL/DOE to prepare a plan that addresses all of the concerns at this site and does not divert resources to resolve comments for a SAP that, as written, will not fulfill all the data needs. The partial implementation of the SAP and the implementation of the interim action plan will significantly reduce the uncertainty about this site and will result in better planning for determining the final remedy.

It was an oversight that these changes in plans and conditions were not communicated previously to the NMED. LANL/DOE proposes that a combination of this RSI response and the forthcoming interim action report be regarded as our communication of the changes in plans and conditions. This communication lays the foundation for further action at this site. LANL/DOE proposes that a VCA plan be prepared in FY99 to address all the concerns at this site resulting in a final remedy that is both satisfactory and cost effective.

The schedule for the VCA is contingent on resolution of the issues discussed above. LANL/DOE will submit an interim action report presenting the results of the interim action.

NMED Comment

2. *LANL/DOE should provide a revised schedule for proposed activities.*

LANL Response

2. The field activities for the interim action will start during September 1998 and will take approximately two weeks to complete.

NMED Comment

3. *The use of TA-21 baseline background concentrations is not appropriate. LANL/DOE should use the background concentrations listed in the draft site-wide background document titled "Inorganic and Radionuclide Background Data for Soils, Canyons Sediments and Bandelier Tuff at Los Alamos National Laboratory" (Ryti et. al, dated 3/16/98). In addition, LANL/DOE should indicate to which set of background concentrations the acquired data will be compared. However, prior to any comparison, LANL/DOE should identity the matrix (i.e., crushed tuff, soil or sediment) that best describes the fill material prior to making a comparison to the background data set.*

LANL Response

3. LANL/DOE believes it is appropriate to use the Technical Area (TA) 21 baseline levels for this interim action because radiation detection instruments will be used to guide the excavation, and these instruments cannot detect radiation levels lower than DP mesa (TA-21) background. The more widespread issue of the higher TA-21 baseline levels (as compared with LANL site-wide background) across the DP mesa top will be addressed separately as PRS 21-021. The data collected during the interim action will be used to help design the subsequent VCA because the existing data set will no longer be representative. After the completion of the interim action, the additional data will be used to revise radiation contour figures that will be submitted with the interim action report. In addition, revised concentrations for non-radioactive contaminants will be reported. Any comparisons used in subsequent plans and reports will clearly state which set of background concentrations is being used.

   TA-21 baseline data will not be used for screening and risk assessments unless approved by appropriate regulatory agencies.

NMED Comment

4. *LANL/DOE should provide rationale for not addressing the area outside the PRS "boundary." Figure 9.1-2 indicates radiation "hot spots" on the surface immediately to the south of the dashed PRS "boundary." LANL should include, at minimum, those "hot spots" outside the dashed PRS boundary. Exclusion of this area from the IA or voluntary corrective action (VCA) would be counter-productive since a potential source for releases to the environment would remain in place. The PRS includes the septic tank, associated piping, and outfall area, since hazardous wastes/constituents have been routinely and systematically released to the area extending from the outfall down to the canyon floor.*

LANL Response

4. It is agreed that the anomalies referred to in the comment are outside the boundary, as shown on Figure 9.1-2. However, the PRS boundary is approximate and is not intended to limit the boundary of the interim action. The figure has been revised to indicate that what was shown as the boundary is the radiological control fence.

The intent of the proposed interim action is to address the majority of the source term. This will include the excavation of any areas (that exceed TA-21 baseline levels) on the mesa top associated with the PRS, as indicated by radiation detection instruments in the field. The remaining areas below the mesa top will be addressed in the subsequent final remedy (see response to comment 1). As discussed in the meeting with NMED on July 22, 1998, a new figure (Figure 9.1-3) has been created showing radiation contours and analytical results for sampled locations on the hillside and bench below the mesa top. In addition, a table (Table 1) has been provided presenting the maximum concentrations of radioisotopes found at various sample locations. This figure and table are included with the attachments to this response.

NMED Comment

5. *LANL/DOE should discuss QA/QC sampling (confirmatory sampling, etc.), analytical techniques, field screening techniques (field portable x-ray fluorescence, etc.), detection limits, etc. in the plan.*

LANL Response

5. The number of samples that will be taken to assess the post-interim action conditions will depend on the amount of area remediated. Based on existing radiation screening results, LANL/DOE assumes that an area of approximately 2000 ft^2 will be excavated and that approximately 16 samples will be taken. Samples will be biased so that fractures and fractured areas are sampled where possible. Per the interim action plan, samples will be analyzed for metals, gamma-emitting radionuclides, isotopic uranium, tritium, semivolatile and volatile organic compounds, and PCBs/pesticides.

   The appropriate numbers and types of analytical quality assurance (QA)/quality control (QC) samples will be collected according to guidance detailed in the LANL Statement of Work for Analytical Support (LANL 1995, 49738) which also complies with the USEPA Contract Laboratory Program National Functional Guidelines for data review.

   The analytical methods to be used for inorganic, organic, and radiochemical data analyses are listed in the analytical laboratory statement of work.

   All QA/QC sampling procedures and the minimum required detection limits are in the "ER Project Quality Assurance Project Plan for Sampling and Analysis" located in the 1996 revision of the ER Project's Installation Work Plan (LANL 1996, 55574). In addition, selected sampling and analysis procedures are also detailed in several LANL ER standard operating procedures (SOPs). Field screening techniques for radionuclides, including those to be conducted with the FIDLER instrument discussed in Section 4.3 of the interim action plan, are detailed in LANL ER-SOP-10.11.

   The Bicron FIDLER instrument detection limit has typically been approximately 1600 cpm, as determined from past records of background and source checks and calculated using the methods given by Currie (1968, 58697). For comparison, measurements with this instrument on natural radioactivity in soils in areas having no radioactive contamination are usually in the range 14,500 to 16,500 cpm. This indicates the instrument is sufficiently sensitive to identify radioactivity at background levels and the presence of additional radioactivity above a background level or baseline.

SPECIFIC COMMENTS

NMED Comment

6. *Section 3.1, Description of the Proposed Interim Action. LANL/DOE should indicate if sampling beneath and adjacent to the vitrified clay pipe (VCP) will be accomplished as it is not clear in the IA plan.*

LANL Response

6. Screening with radiation instruments will be employed to determine what soils should be excavated. Once a cycle of screening and excavation has been completed, the cycle will be repeated, if needed, until side slopes and floors of excavated areas are no longer above TA-21 baseline radiation levels. At that point, samples will be collected as described in the response to Comment 5 to support planning of the subsequent VCA. These samples will include locations beneath and adjacent to portions of the VCP that are removed as part of the excavation.

   In response to the discussions at the July 22, 1998, meeting with NMED, the section of the VCP outlet line that was removed in 1965 is shown on revised Figure 9.1-2, which has been provided with the attachments to this response. The inactive VCP inlet line will be removed approximately 20 to 30 feet upgradient from the tank, and the end of the remaining line will be grouted shut. As discussed in the response to Comment 1, additional upgradient VCP cannot be removed at this time without disrupting existing active utility lines.

NMED Comment

7. *LANL/DOE should indicate if the septic tank will be decontaminated prior to removal.*

LANL Response

7. The reinforced concrete tank will not be decontaminated before removal. The tank is a part of the waste stream, and, as such, there is no need to perform decontamination. In addition, since decontamination is not necessary, waste production will be further minimized. All wastes will be properly characterized before disposal.

NMED Comment

8. *LANL/DOE should define the criteria establishing whether the potentially contaminated removed vegetation is "safe" for chipping and "site restoration soil enhancement."*

LANL Response

8. Vegetation removed to allow heavy equipment access will not be chipped because of safety concerns. Cut vegetation that remains on site will be used in sediment dams as a part of erosion control measures with or in lieu of silt fencing, straw bales, and sand bags. The criteria for leaving vegetation on site will be the same as that for soil (i.e. screening with radiation instruments). Cut vegetation that exceeds soil criteria will be removed from the site and will be disposed of appropriately.

NMED Comment

9. *Section 3.2, Site Restoration. RPMP is concerned that adding a "1 to 2 in. layer of gravel" on excavated surfaces before backfilling may enhance the potential for water to migrate into the subsurface. Because contamination of the subsurface is indicated by elevated tritium concentrations found at depth in the borehole located south of the septic tank, the potential for mobilization of contaminants due to an influx of subsurface water should be evaluated. LANL/DOE should provide support that the introduction of the gravel will not enhance subsurface movement of water.*

LANL Response

9. The purpose of the 1–2 inches of gravel was to demarcate the limits of the excavation so that remediated areas could be easily recognized during future investigation or remediation activities. If safety concerns can be resolved and no closed depressions are created that would pond water, the excavations will be left open until the implementation of the VCA. Open excavations would be covered and/or enclosed by fencing. The best management practice inspection and maintenance schedule as described in the "Storm Water Best Management Practice (BMP) Guidance Document" (LANL 1998, 58696), attached to this document, will be followed. If leaving excavations open is not possible, a geotextile will be substituted for the gravel layer to provide a marker horizon but remove any concerns about possible contaminant mobilization.

NMED Comment

10. *Section 3.3, Additional Investigations. RPMP recommends that while the field team is mobilized, LANL/DOE should not only sample the bench area beneath the mesa top (as proposed) but should also sample to the point on the floor of LA Canyon where the LA Canyon investigation may cover any potential contaminant migration from the mesa top.*

LANL Response

10. The objective of the interim action is source term removal. The additional sampling will be done after the proposed interim action. LANL/DOE realizes that the additional sampling needs to be completed to the point where the investigations in Los Alamos Canyon cover the characterization of any further potential contaminant migration originating from the mesa top. Further investigations, which include adjacent PRSs that potentially contribute to contamination on the bench, to refine knowledge of nature and extent are planned for this site as a part of the subsequent VCA.

NMED Comment

11. *Section 4.2, Sampling: Septic Tank and Lines. LANL/DOE should indicate the depth to tuff at the septic tank and inlet and outlet pipes (perhaps illustrate in a cross-section).*

LANL Response

11. A schematic cross-section through the tank and surrounding area (Figure 9.1-4) has been provided with the attachments submitted with this response.

Based on previous experience from investigations at other septic tank sites in similar settings, the tank is expected to have been excavated into the tuff. The depths at which the tuff is encountered during the interim action will be presented in the interim action report.

NMED Comment

12. *Section 5.1, Maintenance and Inspection. LANL/DOE should define "periodic inspections and maintenance." For example, LANL should describe if the inspections will occur quarterly, after storm events, etc. and what activities are considered maintenance.*

LANL Response

12. LANL/DOE will follow the requirements established for inspections in the "Storm Water Best Management Practice (BMP) Guidance Document" (LANL 1998, 58696). This document requires that active sites (field activity underway) be inspected once a week or whenever a precipitation event of one-half inch or more occurs and that inactive sites be inspected once every other month or whenever a precipitation event of one-half inch or more occurs.

    Routine maintenance would include repairing run-on and runoff controls, such as replacing straw bales, silt fencing, and/or sandbags. If cleared vegetation remains on site and is used for sediment control in drainages, maintenance may include restaking of sediment dams.

NMED Comment

13. *Section 6.2.1, Septic Tank and Lines. LANL/DOE did not clearly indicate where the septic tank debris and investigation derived waste (IDW) will be disposed. LANL/DOE should not only clearly indicate the location of disposal but should also provide the analytical results and methods for sampling the IDW and septic tank sludge.*

LANL Response

13. Waste characterization details, including waste sample analytical results, are documented in other required LANL documents such as the Waste Characterization Strategy Form (WCSF). The WCSF has not yet been finalized, however, a draft WCSF for the 21-024(i) interim action has been provided as an attachment to this response.

    Disposition of wastes will be in accordance with the final WCSF and waste acceptance criteria for TA-54. No wastes will be generated or disposed until the WCSF is completed. Samples taken for waste characterization during previous investigations were collected using LANL ER SOPs 6.09 and 6.10.

References

Currie, Lloyd A., March 1968. "Limits for Qualitative Detection and Quantitative Determination, Application to Radiochemistry," *Analytical Chemistry,* Vol. 40, No. 3, pp.586–593. (Currie 1968, ER ID 58697)

LANL (Los Alamos National Laboratory), July 1995. "Statement of Work–Analytical Support," Revision 2, RFP 9-XS1-Q4257, Los Alamos, New Mexico. (LANL 1995, ER ID 49738)

LANL (Los Alamos National Laboratory), December 1996. "Installation Work Plan for Environmental Restoration Program," Revision 6, Los Alamos National Laboratory Report LA-UR-96-4629, Los Alamos, New Mexico. (LANL 1996, ER ID 55574)

LANL (Los Alamos National Laboratory), June 1998. "Storm Water Best Management Practice (BMP) Guidance Document," prepared by Merrick Engineers & Architects for LANL Water Quality Hydrology Group, ESH-18, Los Alamos, New Mexico. (LANL 1998, ER ID 58696)

LANL (Los Alamos National Laboratory), July 1998. "PRS 21-024(i) Septic Tank and Outfall Draft Waste Characterization Strategy Form," Los Alamos, New Mexico. (LANL 1998, in preparation)

Attachments

1. Figure 9.1-1 PRS 21-024(i) Site Map (revised)
2. Figure 9.1-2 PRS 21-024(i) Sampling Map at Areas 1 and 2 (revised)
3. Figure 9.1-3 PRS 21-024(i) Sampling Map at Area 3
4. Figure 9.1.4 PRS 21-024(i) Schematic Cross-Section of Septic Tank
5. Table 1 Maximum Radiological Constituents at PRS 21-024(i)
6. Storm Water Best Management Practice (BMP) Guidance Document (ER ID 58696)
7. Limits for Qualitative Detection and Quantitative Determination (ER ID 58697)
8. Waste Characterization Strategy Form for PRS 21-024(i)

FIGURES

RSI RESPONSE
PRS 21-024(i) INTERIM ACTION PLAN

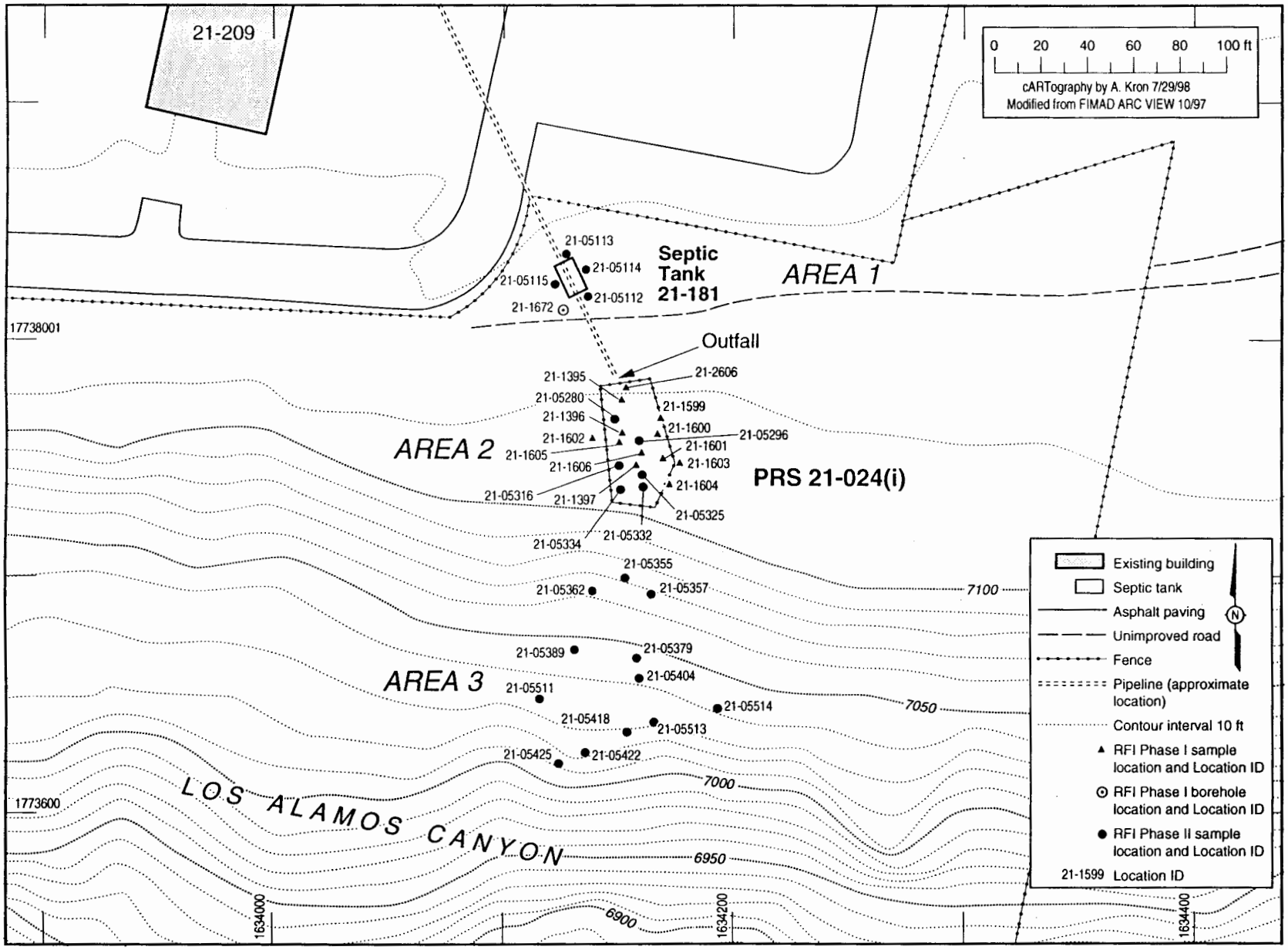

Figure 9.1-1. PRS 21-024(i) Site Map.

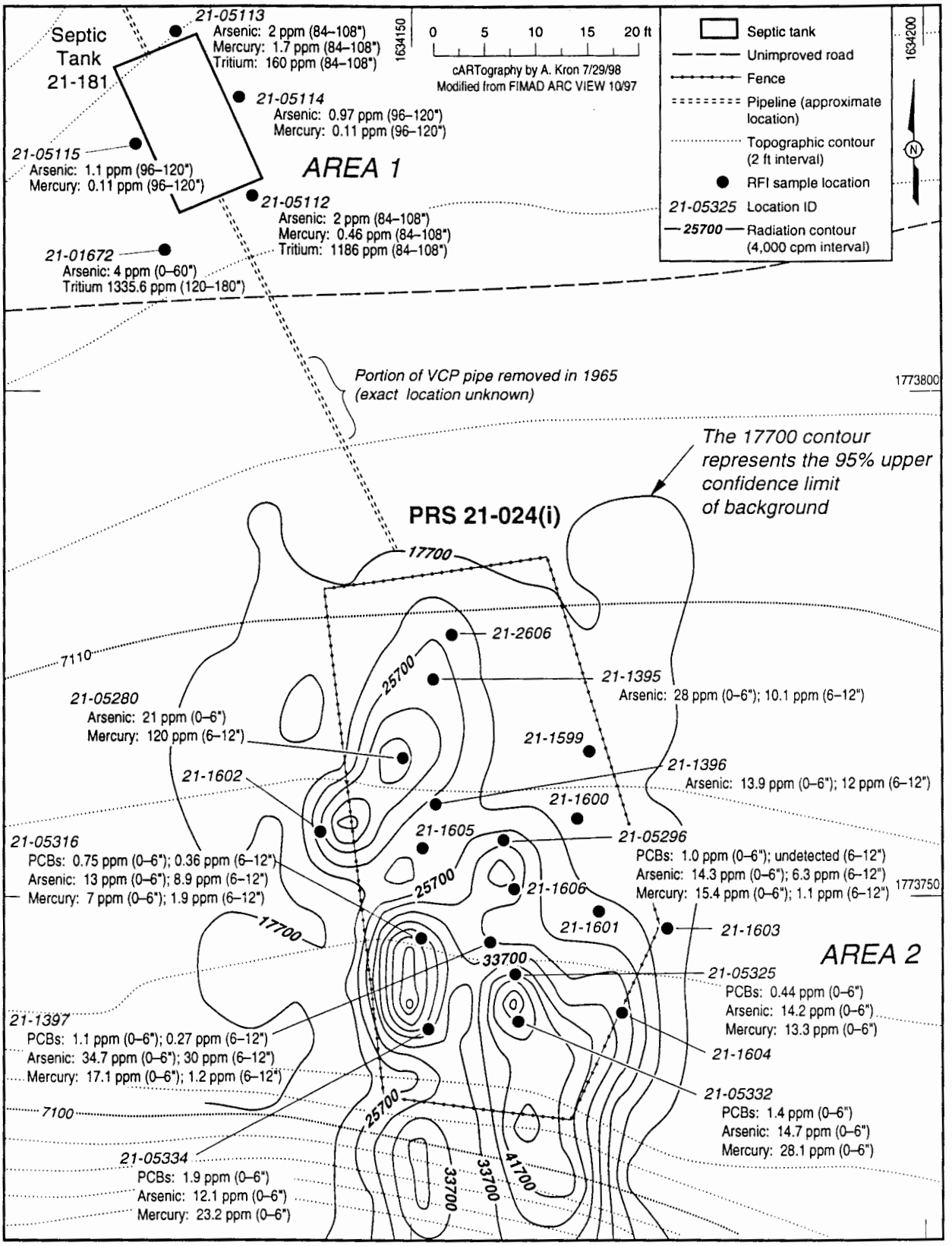

Figure 9.1-2. PRS 21-024(i) Sampling Map at Areas 1 and 2.

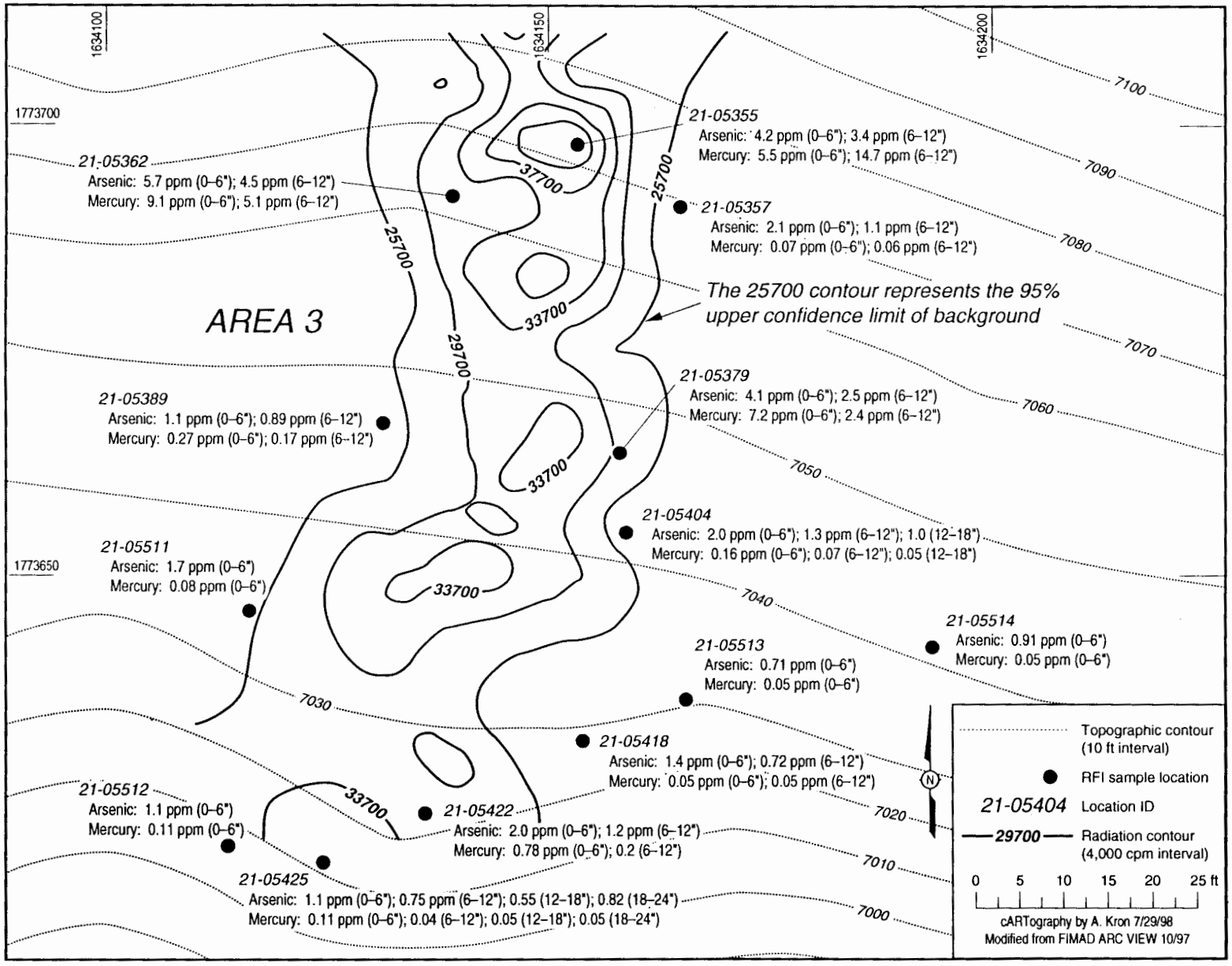

Figure 9.1-3. PRS 21-024(i) Sampling Map at Area 3.

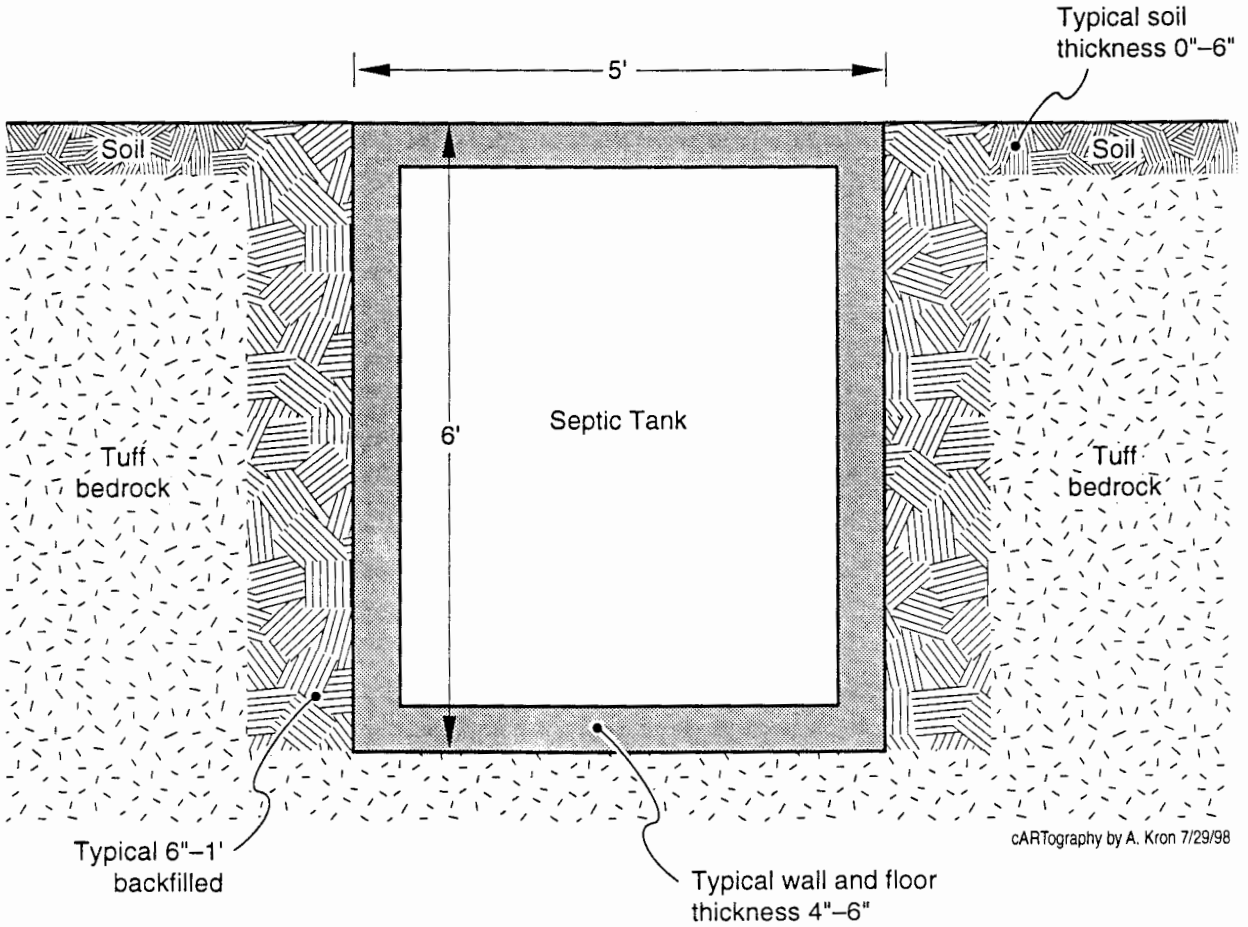

Figure 9.1-4. Schematic Cross-Section of Septic Tank.

TABLE 1

Maximum Radiological Constituents at PRS 21-024(i)

RSI RESPONSE
PRS 21-024(i) INTERIM ACTION PLAN

TABLE 1
MAXIMUM RADIOLOGICAL CONSTITUENTS AT PRS 21-024(i)

Location Id	Name	Max	Units
21-05112	Actinium-228	1.62	pCi/g
21-05112	Americium-241	-0.032	pCi/g
21-05112	Bismuth-211	0.341	pCi/g
21-05112	Bismuth-212	1.32	pCi/g
21-05112	Bismuth-214	0.955	pCi/g
21-05112	Gross Alpha Radiation	3.042	pCi/g
21-05112	Gross Beta Radiation	2.139	pCi/g
21-05112	Lead-211	-0.088	pCi/g
21-05112	Lead-212	1.51	pCi/g
21-05112	Lead-214	1.13	pCi/g
21-05112	Neptunium-237	-0.045	pCi/g
21-05112	Plutonium-238	0.004	pCi/g
21-05112	Plutonium-239	0.009	pCi/g
21-05112	Protactinium-231	1.69	pCi/g
21-05112	Protactinium-233	-0.019	pCi/g
21-05112	Protactinium-234M	2.71	pCi/g
21-05112	Radium-223	0.261	pCi/g
21-05112	Radium-224	1.85	pCi/g
21-05112	Radium-226	2.18	pCi/g
21-05112	Radon-219	-0.268	pCi/g
21-05112	Thallium-208	0.539	pCi/g
21-05112	Thorium-227	-0.898	pCi/g
21-05112	Thorium-228	1.32	pCi/g
21-05112	Thorium-230	0.872	pCi/g
21-05112	Thorium-232	1.27	pCi/g
21-05112	Thorium-234	-3.721	pCi/g
21-05112	Tritium	1186.008	pCi/g
21-05112	Uranium-234	0.636	pCi/g
21-05112	Uranium-235	0.091	pCi/g
21-05112	Uranium-238	0.631	pCi/g
21-05113	Actinium-228	1.45	pCi/g
21-05113	Americium-241	-0.007	pCi/g
21-05113	Bismuth-211	0	pCi/g
21-05113	Bismuth-212	0.76	pCi/g
21-05113	Bismuth-214	0.961	pCi/g
21-05113	Gross Alpha Radiation	3.606	pCi/g
21-05113	Gross Beta Radiation	3.126	pCi/g
21-05113	Lead-211	0.336	pCi/g
21-05113	Lead-212	1.49	pCi/g
21-05113	Lead-214	1.09	pCi/g
21-05113	Neptunium-237	0.514	pCi/g
21-05113	Plutonium-238	0.002	pCi/g
21-05113	Plutonium-239	0.072	pCi/g
21-05113	Protactinium-231	2.17	pCi/g
21-05113	Protactinium-233	-0.025	pCi/g
21-05113	Protactinium-234M	-1.38	pCi/g
21-05113	Radium-223	-0.036	pCi/g
21-05113	Radium-224	1.63	pCi/g

TABLE 1
MAXIMUM RADIOLOGICAL CONSTITUENTS AT PRS 21-024(i)

Location Id	Name	Max	Units
21-05113	Radium-226	2.87	pCi/g
21-05113	Radon-219	0.197	pCi/g
21-05113	Thallium-208	0.457	pCi/g
21-05113	Thorium-227	-2.64	pCi/g
21-05113	Thorium-228	1.23	pCi/g
21-05113	Thorium-230	0.97	pCi/g
21-05113	Thorium-232	1.34	pCi/g
21-05113	Thorium-234	-2.05	pCi/g
21-05113	Tritium	159.987	pCi/g
21-05113	Uranium-234	0.792	pCi/g
21-05113	Uranium-235	0.082	pCi/g
21-05113	Uranium-238	0.749	pCi/g
21-05114	Americium-241	0	pCi/g
21-05114	Gross Alpha Radiation	1.38	pCi/g
21-05114	Gross Beta Radiation	1.42	pCi/g
21-05114	Neptunium-237	-0.02	pCi/g
21-05114	Plutonium-238	0	pCi/g
21-05114	Plutonium-239	0.016	pCi/g
21-05114	Thorium-227	0.027	pCi/g
21-05114	Thorium-228	0.466	pCi/g
21-05114	Thorium-230	0.317	pCi/g
21-05114	Thorium-232	0.526	pCi/g
21-05114	Uranium-234	0.29	pCi/g
21-05114	Uranium235 + Uranium-236	0.011	pCi/g
21-05114	Uranium-238	0.294	pCi/g
21-05115	Americium-241	0.01	pCi/g
21-05115	Gross Alpha Radiation	1.57	pCi/g
21-05115	Gross Beta Radiation	1.5	pCi/g
21-05115	Neptunium-237	-0.01	pCi/g
21-05115	Plutonium-238	0.023	pCi/g
21-05115	Plutonium-239	0.099	pCi/g
21-05115	Thorium-227	0.058	pCi/g
21-05115	Thorium-228	0.535	pCi/g
21-05115	Thorium-230	0.374	pCi/g
21-05115	Thorium-232	0.558	pCi/g
21-05115	Uranium-234	0.178	pCi/g
21-05115	Uranium235 + Uranium-236	0.012	pCi/g
21-05115	Uranium-238	0.176	pCi/g
21-05280	Actinium-228	2.31	pCi/g
21-05280	Americium-241	0.72	pCi/g
21-05280	Bismuth-211	102	pCi/g
21-05280	Bismuth-212	1.71	pCi/g
21-05280	Bismuth-214	1.02	pCi/g
21-05280	Gross Alpha Radiation	449.767	pCi/g
21-05280	Gross Beta Radiation	159.77	pCi/g
21-05280	Lead-211	126	pCi/g
21-05280	Lead-212	1.42	pCi/g
21-05280	Lead-214	1.68	pCi/g

TABLE 1
MAXIMUM RADIOLOGICAL CONSTITUENTS AT PRS 21-024(i)

Location Id	Name	Max	Units
21-05280	Neptunium-237	-62.5	pCi/g
21-05280	Plutonium-238	0.027	pCi/g
21-05280	Plutonium-239	2.892	pCi/g
21-05280	Protactinium-231	82.4	pCi/g
21-05280	Protactinium-233	1.29	pCi/g
21-05280	Protactinium-234M	26.5	pCi/g
21-05280	Radium-223	104	pCi/g
21-05280	Radium-224	-6.98	pCi/g
21-05280	Radium-226	32.9	pCi/g
21-05280	Radon-219	104	pCi/g
21-05280	Thallium-208	0.488	pCi/g
21-05280	Thorium-227	107	pCi/g
21-05280	Thorium-228	0.838	pCi/g
21-05280	Thorium-230	0.64	pCi/g
21-05280	Thorium-232	0.523	pCi/g
21-05280	Thorium-234	-105	pCi/g
21-05280	Tritium	18.398	pCi/g
21-05280	Uranium-234	44.044	pCi/g
21-05280	Uranium-235	3.003	pCi/g
21-05280	Uranium-238	10.344	pCi/g
21-05355	Actinium-228	1.73	pCi/g
21-05355	Americium-241	0.4377	pCi/g
21-05355	Bismuth-211	6.91	pCi/g
21-05355	Bismuth-212	0.93	pCi/g
21-05355	Bismuth-214	1.28	pCi/g
21-05355	Lead-211	9.2	pCi/g
21-05355	Lead-212	1.6199	pCi/g
21-05355	Lead-214	1.369	pCi/g
21-05355	Neptunium-237	1.14	pCi/g
21-05355	Protactinium-231	8.41	pCi/g
21-05355	Protactinium-233	0.013	pCi/g
21-05355	Protactinium-234M	10.5	pCi/g
21-05355	Radium-223	7.14	pCi/g
21-05355	Radium-224	0.838	pCi/g
21-05355	Radium-226	3.84	pCi/g
21-05355	Radon-219	7.453	pCi/g
21-05355	Thallium-208	0.483	pCi/g
21-05355	Thorium-227	8.178	pCi/g
21-05355	Thorium-228	1.55	pCi/g
21-05355	Thorium-230	1.11	pCi/g
21-05355	Thorium-232	1.38	pCi/g
21-05355	Thorium-234	-1.672	pCi/g
21-05355	Tritium	2.4	pCi/g
21-05355	Uranium-234	6.21	pCi/g
21-05355	Uranium-235	0.414	pCi/g
21-05355	Uranium235 + Uranium-236	0.266	pCi/g
21-05355	Uranium-238	2.69	pCi/g
21-05357	Actinium-228	1.459	pCi/g

TABLE 1
MAXIMUM RADIOLOGICAL CONSTITUENTS AT PRS 21-024(i)

Location Id	Name	Max	Units
21-05357	Americium-241	0.0438	pCi/g
21-05357	Bismuth-211	0.332	pCi/g
21-05357	Bismuth-212	2.3	pCi/g
21-05357	Bismuth-214	1.12	pCi/g
21-05357	Lead-211	0.277	pCi/g
21-05357	Lead-212	1.59	pCi/g
21-05357	Lead-214	1.38	pCi/g
21-05357	Neptunium-237	0.458	pCi/g
21-05357	Protactinium-231	1.347	pCi/g
21-05357	Protactinium-233	0.0157	pCi/g
21-05357	Protactinium-234M	11.28	pCi/g
21-05357	Radium-223	0.186	pCi/g
21-05357	Radium-224	1.489	pCi/g
21-05357	Radium-226	2.99	pCi/g
21-05357	Radon-219	0.128	pCi/g
21-05357	Thallium-208	0.4395	pCi/g
21-05357	Thorium-227	-0.15	pCi/g
21-05357	Thorium-228	1.39	pCi/g
21-05357	Thorium-230	1.24	pCi/g
21-05357	Thorium-232	1.41	pCi/g
21-05357	Thorium-234	-2.67	pCi/g
21-05357	Tritium	0.11	pCi/g
21-05357	Uranium-234	1.11	pCi/g
21-05357	Uranium-235	0.106	pCi/g
21-05357	Uranium235 + Uranium-236	0.0541	pCi/g
21-05357	Uranium-238	1.12	pCi/g
21-05362	Actinium-228	1.55	pCi/g
21-05362	Americium-241	0.048	pCi/g
21-05362	Bismuth-211	4.496	pCi/g
21-05362	Bismuth-212	1.21	pCi/g
21-05362	Bismuth-214	1.32	pCi/g
21-05362	Lead-211	5.067	pCi/g
21-05362	Lead-212	1.61	pCi/g
21-05362	Lead-214	1.48	pCi/g
21-05362	Neptunium-237	-1.237	pCi/g
21-05362	Protactinium-231	6.382	pCi/g
21-05362	Protactinium-233	0.0802	pCi/g
21-05362	Protactinium-234M	10.6	pCi/g
21-05362	Radium-223	4.21	pCi/g
21-05362	Radium-224	1.269	pCi/g
21-05362	Radium-226	7.65	pCi/g
21-05362	Radon-219	4.42	pCi/g
21-05362	Thallium-208	0.5018	pCi/g
21-05362	Thorium-227	4.343	pCi/g
21-05362	Thorium-228	1.41	pCi/g
21-05362	Thorium-230	0.973	pCi/g
21-05362	Thorium-232	1.37	pCi/g
21-05362	Thorium-234	5.357	pCi/g

TABLE 1
MAXIMUM RADIOLOGICAL CONSTITUENTS AT PRS 21-024(i)

Location Id	Name	Max	Units
21-05362	Tritium	0.61	pCi/g
21-05362	Uranium-234	7.25	pCi/g
21-05362	Uranium-235	0.462	pCi/g
21-05362	Uranium235 + Uranium-236	0.306	pCi/g
21-05362	Uranium-238	3.45	pCi/g
21-05379	Actinium-228	1.49	pCi/g
21-05379	Americium-241	0.027	pCi/g
21-05379	Bismuth-211	3.13	pCi/g
21-05379	Bismuth-212	1.34	pCi/g
21-05379	Bismuth-214	1.3298	pCi/g
21-05379	Lead-211	3.77	pCi/g
21-05379	Lead-212	1.42	pCi/g
21-05379	Lead-214	1.22	pCi/g
21-05379	Neptunium-237	-0.684	pCi/g
21-05379	Protactinium-231	4.722	pCi/g
21-05379	Protactinium-233	0.011	pCi/g
21-05379	Protactinium-234M	6.19	pCi/g
21-05379	Radium-223	3.67	pCi/g
21-05379	Radium-224	1.17	pCi/g
21-05379	Radium-226	5.402	pCi/g
21-05379	Radon-219	3.19	pCi/g
21-05379	Thallium-208	0.4523	pCi/g
21-05379	Thorium-227	3.34	pCi/g
21-05379	Thorium-228	1.46	pCi/g
21-05379	Thorium-230	0.932	pCi/g
21-05379	Thorium-232	1.38	pCi/g
21-05379	Thorium-234	-1.34	pCi/g
21-05379	Tritium	0.45	pCi/g
21-05379	Uranium-234	4.93	pCi/g
21-05379	Uranium-235	0.3403	pCi/g
21-05379	Uranium235 + Uranium-236	0.178	pCi/g
21-05379	Uranium-238	2.25	pCi/g
21-05389	Actinium-228	1.292	pCi/g
21-05389	Americium-241	0.118	pCi/g
21-05389	Bismuth-211	0	pCi/g
21-05389	Bismuth-212	2.19	pCi/g
21-05389	Bismuth-214	1.18	pCi/g
21-05389	Lead-211	0.63	pCi/g
21-05389	Lead-212	1.61	pCi/g
21-05389	Lead-214	1.3	pCi/g
21-05389	Neptunium-237	0.659	pCi/g
21-05389	Protactinium-231	3.12	pCi/g
21-05389	Protactinium-233	0	pCi/g
21-05389	Protactinium-234M	-0.602	pCi/g
21-05389	Radium-223	0.084	pCi/g
21-05389	Radium-224	1.09	pCi/g
21-05389	Radium-226	3.29	pCi/g
21-05389	Radon-219	0.073	pCi/g

TABLE 1
MAXIMUM RADIOLOGICAL CONSTITUENTS AT PRS 21-024(i)

Location Id	Name	Max	Units
21-05389	Thallium-208	0.543	pCi/g
21-05389	Thorium-227	-0.223	pCi/g
21-05389	Thorium-228	1.31	pCi/g
21-05389	Thorium-230	0.937	pCi/g
21-05389	Thorium-232	1.28	pCi/g
21-05389	Thorium-234	0.892	pCi/g
21-05389	Tritium	0.11	pCi/g
21-05389	Uranium-234	1.04	pCi/g
21-05389	Uranium-235	0.123	pCi/g
21-05389	Uranium235 + Uranium-236	0.0721	pCi/g
21-05389	Uranium-238	1.09	pCi/g
21-05404	Actinium-228	1.432	pCi/g
21-05404	Americium-241	0.06	pCi/g
21-05404	Bismuth-211	0.318	pCi/g
21-05404	Bismuth-212	1.6	pCi/g
21-05404	Bismuth-214	1.16	pCi/g
21-05404	Lead-211	0.561	pCi/g
21-05404	Lead-212	1.5807	pCi/g
21-05404	Lead-214	1.3	pCi/g
21-05404	Neptunium-237	0.339	pCi/g
21-05404	Protactinium-231	2.887	pCi/g
21-05404	Protactinium-233	0.028	pCi/g
21-05404	Protactinium-234M	8.57	pCi/g
21-05404	Radium-223	0.563	pCi/g
21-05404	Radium-224	1.919	pCi/g
21-05404	Radium-226	3.56	pCi/g
21-05404	Radon-219	0.408	pCi/g
21-05404	Thallium-208	0.4997	pCi/g
21-05404	Thorium-227	-0.245	pCi/g
21-05404	Thorium-228	1.45	pCi/g
21-05404	Thorium-230	1.06	pCi/g
21-05404	Thorium-232	1.36	pCi/g
21-05404	Thorium-234	-0.29	pCi/g
21-05404	Tritium	0.15	pCi/g
21-05404	Uranium-234	1.28	pCi/g
21-05404	Uranium-235	0.1631	pCi/g
21-05404	Uranium235 + Uranium-236	0.0631	pCi/g
21-05404	Uranium-238	1.12	pCi/g
21-05418	Actinium-228	1.38	pCi/g
21-05418	Americium-241	0.0927	pCi/g
21-05418	Bismuth-211	0	pCi/g
21-05418	Bismuth-212	3.63	pCi/g
21-05418	Bismuth-214	1.0617	pCi/g
21-05418	Lead-211	0.294	pCi/g
21-05418	Lead-212	1.3	pCi/g
21-05418	Lead-214	1.038	pCi/g
21-05418	Neptunium-237	0.42	pCi/g
21-05418	Protactinium-231	2.558	pCi/g

TABLE 1
MAXIMUM RADIOLOGICAL CONSTITUENTS AT PRS 21-024(i)

Location Id	Name	Max	Units
21-05418	Protactinium-233	0.0241	pCi/g
21-05418	Protactinium-234M	6.89	pCi/g
21-05418	Radium-223	0.264	pCi/g
21-05418	Radium-224	1.01	pCi/g
21-05418	Radium-226	2.46	pCi/g
21-05418	Radon-219	0.251	pCi/g
21-05418	Thallium-208	0.4957	pCi/g
21-05418	Thorium-227	-0.443	pCi/g
21-05418	Thorium-228	1.56	pCi/g
21-05418	Thorium-230	1.11	pCi/g
21-05418	Thorium-232	1.5	pCi/g
21-05418	Thorium-234	0.396	pCi/g
21-05418	Tritium	0.1	pCi/g
21-05418	Uranium-234	0.752	pCi/g
21-05418	Uranium-235	0.073	pCi/g
21-05418	Uranium235 + Uranium-236	0.0518	pCi/g
21-05418	Uranium-238	0.739	pCi/g
21-05422	Actinium-228	1.832	pCi/g
21-05422	Americium-241	0.033	pCi/g
21-05422	Bismuth-211	0.931	pCi/g
21-05422	Bismuth-212	0.83	pCi/g
21-05422	Bismuth-214	1.4	pCi/g
21-05422	Lead-211	0.953	pCi/g
21-05422	Lead-212	1.613	pCi/g
21-05422	Lead-214	1.139	pCi/g
21-05422	Neptunium-237	1.033	pCi/g
21-05422	Protactinium-231	2.452	pCi/g
21-05422	Protactinium-233	0.014	pCi/g
21-05422	Protactinium-234M	1.94	pCi/g
21-05422	Radium-223	0.474	pCi/g
21-05422	Radium-224	2.759	pCi/g
21-05422	Radium-226	2.803	pCi/g
21-05422	Radon-219	0.172	pCi/g
21-05422	Thallium-208	0.5637	pCi/g
21-05422	Thorium-227	0.082	pCi/g
21-05422	Thorium-228	1.61	pCi/g
21-05422	Thorium-230	1.11	pCi/g
21-05422	Thorium-232	1.67	pCi/g
21-05422	Thorium-234	-0.682	pCi/g
21-05422	Tritium	0.16	pCi/g
21-05422	Uranium-234	1.76	pCi/g
21-05422	Uranium-235	0.1328	pCi/g
21-05422	Uranium235 + Uranium-236	0.0653	pCi/g
21-05422	Uranium-238	1.14	pCi/g
21-05425	Actinium-228	1.893	pCi/g
21-05425	Americium-241	0.0658	pCi/g
21-05425	Bismuth-211	0.708	pCi/g
21-05425	Bismuth-212	1.94	pCi/g

TABLE 1
MAXIMUM RADIOLOGICAL CONSTITUENTS AT PRS 21-024(i)

Location Id	Name	Max	Units
21-05425	Bismuth-214	1.23	pCi/g
21-05425	Lead-211	-0.049	pCi/g
21-05425	Lead-212	1.81	pCi/g
21-05425	Lead-214	1.411	pCi/g
21-05425	Neptunium-237	0.799	pCi/g
21-05425	Protactinium-231	2.89	pCi/g
21-05425	Protactinium-233	0.0329	pCi/g
21-05425	Protactinium-234M	4.01	pCi/g
21-05425	Radium-223	0.245	pCi/g
21-05425	Radium-224	1.87	pCi/g
21-05425	Radium-226	3.488	pCi/g
21-05425	Radon-219	0.227	pCi/g
21-05425	Thallium-208	0.597	pCi/g
21-05425	Thorium-227	-0.139	pCi/g
21-05425	Thorium-228	1.58	pCi/g
21-05425	Thorium-230	1.05	pCi/g
21-05425	Thorium-232	1.55	pCi/g
21-05425	Thorium-234	-0.985	pCi/g
21-05425	Tritium	0.05	pCi/g
21-05425	Uranium-234	0.833	pCi/g
21-05425	Uranium-235	0.1278	pCi/g
21-05425	Uranium235 + Uranium-236	0.0541	pCi/g
21-05425	Uranium-238	0.856	pCi/g
21-1395	Americium-241	1.3	pCi/g
21-1395	Plutonium-238	0.043	pCi/g
21-1395	Plutonium-239	0.64	pCi/g
21-1395	Strontium-90	1	pCi/g
21-1395	Thorium-228	1.5	pCi/g
21-1395	Thorium-230	0.9	pCi/g
21-1395	Thorium-232	1.2	pCi/g
21-1395	Tritium	130	pCi/g
21-1396	Americium-241	1.3	pCi/g
21-1396	Plutonium-238	0.084	pCi/g
21-1396	Plutonium-239	9.2	pCi/g
21-1396	Strontium-90	0.5	pCi/g
21-1396	Thorium-228	1.4	pCi/g
21-1396	Thorium-230	1.1	pCi/g
21-1396	Thorium-232	1.4	pCi/g
21-1396	Tritium	38.3	pCi/g
21-1397	Americium-241	1.54	pCi/g
21-1397	Plutonium-238	0.077	pCi/g
21-1397	Plutonium-239	6.1	pCi/g
21-1397	Strontium-90	0.7	pCi/g
21-1397	Thorium-228	1.2	pCi/g
21-1397	Thorium-230	1.3	pCi/g
21-1397	Thorium-232	1.1	pCi/g
21-1397	Tritium	406	pCi/g
21-1599	Actinium-227	3.57	pCi/g

TABLE 1
MAXIMUM RADIOLOGICAL CONSTITUENTS AT PRS 21-024(i)

Location Id	Name	Max	Units
21-1599	Americium-241	0.066	pCi/g
21-1599	Plutonium-238	0.01	pCi/g
21-1599	Plutonium-239	0.641	pCi/g
21-1599	Strontium-90	0.32	pCi/g
21-1599	Tritium	53.27459	pCi/g
21-1599	Uranium-234	9.67	pCi/g
21-1599	Uranium-235	0.31	pCi/g
21-1599	Uranium-238	4.86	pCi/g
21-1600	Actinium-227	33.23	pCi/g
21-1600	Americium-241	0.098	pCi/g
21-1600	Plutonium-238	0.024	pCi/g
21-1600	Plutonium-239	2.572	pCi/g
21-1600	Strontium-90	0.14	pCi/g
21-1600	Tritium	169.56584	pCi/g
21-1600	Uranium-234	10.34	pCi/g
21-1600	Uranium-235	0.42	pCi/g
21-1600	Uranium-238	5.72	pCi/g
21-1601	Actinium-227	17.77	pCi/g
21-1601	Americium-241	0.084	pCi/g
21-1601	Plutonium-238	0.015	pCi/g
21-1601	Plutonium-239	1.681	pCi/g
21-1601	Strontium-90	0.21	pCi/g
21-1601	Tritium	41.90879	pCi/g
21-1601	Uranium-234	9.96	pCi/g
21-1601	Uranium-235	0.39	pCi/g
21-1601	Uranium-238	5.3	pCi/g
21-1602	Actinium-227	4.39	pCi/g
21-1602	Americium-241	0.045	pCi/g
21-1602	Plutonium-238	0.01	pCi/g
21-1602	Plutonium-239	0.311	pCi/g
21-1602	Strontium-90	0.28	pCi/g
21-1602	Tritium	0.26457	pCi/g
21-1602	Uranium-234	1.82	pCi/g
21-1602	Uranium-235	0.11	pCi/g
21-1602	Uranium-238	1.53	pCi/g
21-1603	Actinium-227	7.83	pCi/g
21-1603	Americium-241	0.206	pCi/g
21-1603	Plutonium-238	0.012	pCi/g
21-1603	Plutonium-239	1.061	pCi/g
21-1603	Strontium-90	0.2	pCi/g
21-1603	Tritium	3.95572	pCi/g
21-1603	Uranium-234	4.78	pCi/g
21-1603	Uranium-235	0.21	pCi/g
21-1603	Uranium-238	2.91	pCi/g
21-1604	Actinium-227	3.89	pCi/g
21-1604	Americium-241	0.028	pCi/g
21-1604	Plutonium-238	0.004	pCi/g
21-1604	Plutonium-239	0.317	pCi/g

TABLE 1
MAXIMUM RADIOLOGICAL CONSTITUENTS AT PRS 21-024(i)

Location Id	Name	Max	Units
21-1604	Strontium-90	0.23	pCi/g
21-1604	Tritium	0.81545	pCi/g
21-1604	Uranium-234	1.475	pCi/g
21-1604	Uranium-235	0.066	pCi/g
21-1604	Uranium-238	1.239	pCi/g
21-1605	Actinium-227	110.85	pCi/g
21-1605	Americium-241	0.162	pCi/g
21-1605	Plutonium-238	0.032	pCi/g
21-1605	Plutonium-239	1.602	pCi/g
21-1605	Strontium-90	0.31	pCi/g
21-1605	Tritium	889.26952	pCi/g
21-1605	Uranium-234	35.425	pCi/g
21-1605	Uranium-235	1.37	pCi/g
21-1605	Uranium-238	13.024	pCi/g
21-1606	Actinium-227	56.84	pCi/g
21-1606	Americium-241	0.335	pCi/g
21-1606	Plutonium-238	0.058	pCi/g
21-1606	Plutonium-239	9.687	pCi/g
21-1606	Strontium-90	0.25	pCi/g
21-1606	Tritium	676.97802	pCi/g
21-1606	Uranium-234	47.93	pCi/g
21-1606	Uranium-235	1.91	pCi/g
21-1606	Uranium-238	23.03	pCi/g
21-1672	Actinium-227	6.87	pCi/g
21-1672	Americium-241	0.01	pCi/g
21-1672	Plutonium-238	0.002	pCi/g
21-1672	Plutonium-239	0.005	pCi/g
21-1672	Strontium-90	-0.06	pCi/g
21-1672	Thorium-228	1.51	pCi/g
21-1672	Thorium-230	1.28	pCi/g
21-1672	Thorium-232	1.45	pCi/g
21-1672	Tritium	1335.58261	pCi/g
21-1672	Uranium-234	1.28	pCi/g
21-1672	Uranium-235	0.12	pCi/g
21-1672	Uranium-238	1.2	pCi/g

REFERENCE

Storm Water Best Management Practice (BMP) Guidance Document

RSI RESPONSE
PRS 21-024(i) INTERIM ACTION PLAN

STORM WATER

BEST MANAGEMENT PRACTICE (BMP)

GUIDANCE DOCUMENT

Prepared for:

Los Alamos National Laboratory
Water Quality & Hydrology Group
ESH-18

Prepared by:
Merrick Engineers & Architects
195 East Road
Los Alamos, New Mexico 87544
(505) 662-0606
Job Number: 30012743

June 1998

PREFACE

This guidance document was developed to provide information on the selection, installation, inspection, and maintenance of Best Management Practices (BMPs) designed to control the migration of potential pollutants to surface water. Migration includes concentrated storm water runoff, erosion, and sediment transport. The intent of this guidance document is to provide a consistent approach in the selection and use of BMPs at Los Alamos National Laboratory (LANL).

The use of BMPs to minimize pollutant migration is a requirement of several regulatory programs, including the surface water quality standards established by the New Mexico Environment Department. BMP use is also associated with a LANL voluntary program for the control of non-point source pollution. Under the National Pollutant Discharge Elimination System (NPDES) Storm Water Program, the Environmental Protection Agency (EPA) defines a BMP as *"schedules of activities, prohibitions of practices, maintenance procedures, and other management practices to prevent or reduce the pollution of waters of the United States. BMPs also include treatment requirements, operating procedures, and practices to control facility site runoff, spillage or leaks, sludge or waste disposal, or drainage from raw material storage."*

The BMPs discussed in this document are vegetative and structural controls designed to manage concentrated storm water runoff, to minimize erosion and sediment transport, and to prevent a spill or leak from adversely impacting surface water and the environment. These selected BMPs are applicable for the arid climate of the region, and are those controls commonly used in outside industry. The BMPs are organized within the following sections:

- Sediment Retention Controls
- Diversion Structures & Controls
- Conveyance Structures & Controls
- Vegetative Controls
- Channel Stabilization
- Spill Prevention

This document is not intended to be inclusive of all the BMPs that may be applicable at LANL. As new surface water pollution controls are reviewed and used, they may be added to this document. In addition, the information provided in this document is not intended for use as an engineering design standard. Such applicable standards are found in the LANL Civil Standards Manual.

TABLE OF CONTENTS

SEDIMENT RETENTION CONTROLS
Silt Fence ____ 1
Straw Bale Barrier ____ 4
Brush Barrier ____ 7
Sediment Traps & Basins ____ 10
Construction Entrance/Exit ____ 15
Storm Drain Inlet Protection ____ 18

DIVERSION STRUCTURES & CONTROLS
Berms ____ 25
Check Dams ____ 28
Waterbar ____ 32
Surface Roughening ____ 35

CONVEYANCE STRUCTURES & CONTROLS
Pipe Slope Drain ____ 39
Level Spreader ____ 42
Channels ____ 45

VEGETATIVE CONTROLS
Vegetative Buffer Zones ____ 49
Mulching ____ 52
Matting ____ 54
Temporary Seeding ____ 58
Permanent Seeding ____ 60

CHANNEL STABILIZATION
Riprap ____ 62
Gabions ____ 65
Storm Drain Outlet Protection ____ 68
Cellular Confinement System ____ 71

SPILL PREVENTiON
Drum & Container Storage ____ 74
Electrical Transformers ____ 76
Salvage Areas ____ 78

Hydraulic Equipment _____ 80
Air Compressors _____ 82

APPENDICES

Appendix A References
Appendix B BMP Inspection and Maintenance Form

SILT FENCE

GENERAL DESCRIPTION:

A silt fence is a temporary sedimentation control used most commonly on slope contours and within small drainage areas. Its primary function is to detain sediment onsite by creating minimal ponding of storm water runoff and allowing transported sediment to settle out. Traditional silt fence design consists of filter fabric attached to support posts with the lower portion of the fence vertically entrenched and covered by backfill. The fence may also be supported by wire mesh. Additional variations of silt fence design, such as straw bale barriers wrapped in filter fabric, are also used.

PROS:

- Relatively inexpensive for materials and construction
- Minimal clearing or grubbing prior to installation
- Easy to inspect
- Very effective when used with low velocity runoff
- No formal design is required
- Effective where sheet and rill erosion is a problem

CONS:

- Appropriate only for small drainage areas (approximately one acre or less)
- Appropriate only for low velocity flows (approximately less than 0.5 cfs)
- Not designed to support significant ponding
- Upslope grade perpendicular to the fence should not exceed 1:1
- Requires frequent inspection (minimum - after each significant rainfall)
- Requires prompt repair to maintain effectiveness

INSTALLATION GUIDELINES:

Traditional Silt Fence

- The height of a silt fence shall not exceed 36 inches. Ponding and sediment storage height shall not exceed 18 inches.
- The fence line shall follow the contour as closely as possible and maintain a uniform elevation.
- To help ensure maximum life expectancy of the silt fence, the filter fabric should contain ultraviolet ray inhibitors and stabilizers.
- Where possible filter fabric should be cut from a continuous roll to avoid the use of joints. If joints are required, the fabric should be spliced at a support post with a 6 inch minimum overlap. Both ends should be securely fastened to the post.
- Posts shall be spaced a maximum of 10 feet when wire support is used and a maximum of 6 feet apart when used without wire support. Posts should be driven into the ground a minimum of 12 inches.
- The ends of the fence shall be turned uphill.
- Along the line of posts, on the upslope side of the fence, a 4 inch wide trench shall be excavated and the filter fabric buried to a minimum depth of 6 inches. The trench shall be backfilled and the soil compacted over the toe of the filter fabric
- When using standard-strength filter fabric, a wire mesh support fence should be fastened to the upslope side of the posts using heavy duty wire staples at least 1 inch long, tie wires or hog rings. Extend the wire into the trench a minimum of 2 inches and no more than 36 inches above the original ground surface. The filter fabric shall then be stapled or wired to the fence with 6 inches of the fabric extending into the trench.

- When using extra-strength filter fabric, a wire mesh support fence is not required. The filter fabric shall then be stapled or wired directly to the posts.
- Silt fences shall be set at least 6 feet from the toe of a slope to increase ponding volume.

Straw Bale Silt Fence

- Bales shall be wrapped in filter fabric.
- Fences should be no more than one bale high.
- Bales should be embedded in a trench that has been excavated to a minimum depth of 4 inches.
- Bales should tightly abut one another.
- Gaps between bale sections should be filled, and backfill material should be tamped to prevent erosional displacement.

INSPECTION AND MAINTENANCE:

- For active field operations, silt fences shall be inspected weekly and following each storm event producing greater than 0.5 inches of precipitation.
- When site activity has ceased and significant surface runoff is not likely (arid season), inspections shall be conducted at least every other month and following each storm event producing greater than 0.5 inches of precipitation.
- If an additional inspection frequency is specified within a Storm Water Pollution Prevention (SWPP) Plan, this frequency shall be followed.
- Inspections shall be documented on the BMP Inspection and Maintenance Form.
- Inspectors should identify in particular:
    - Correct installation
    - Effectiveness in controlling sediment transport and erosion.
    - Damage that has occurred since the last inspection. *Most notably*: torn or sagging fences, areas where runoff has eroded a channel beneath or around the fence, and collapsed bales.
    - Required maintenance
    - Sediment accumulations and the need to remove the accumulations.
    - Evidence of erosion or other damage in the surrounding area.
- Accumulated sediment shall be removed when it reaches 1/3 to 1/2 the height of the silt fence.
- Removed sediment accumulations shall not be placed within any drainage, above or below the BMP.
- Removed sediment shall be stabilized to prevent future migration from storm water runoff.
- Required repairs should be conducted immediately and documented in the current or next inspection record.

Environmental media (e.g. soil, sediment, surface and ground water) is not considered waste. However, contaminated environmental media may constitute solid waste and/or hazardous waste. If there is any potential for accumulated sediment to be contaminated, a waste determination must be made and documented. For guidance, see the Laboratory's LIRs on Radioactive Waste, Managing Solid Waste, and Hazardous and Mixed Waste Requirements for Generators.

Inspection plans and records shall be maintained by the owner/operator, and made available for future regulatory inspections.

REMOVAL CRITERIA:

- Silt fences shall not be removed until the upslope area has been permanently stabilized with structural controls or vegetation.
- Final vegetative stabilization is defined as 70% of the vegetative cover that would exist under normal site conditions. This determination shall be made by the Water Quality & Hydrology Group (ESH-18).

For assistance with BMP selection, installation, or maintenance, please contact ESH-18 at 665-4752.

SILT FENCE

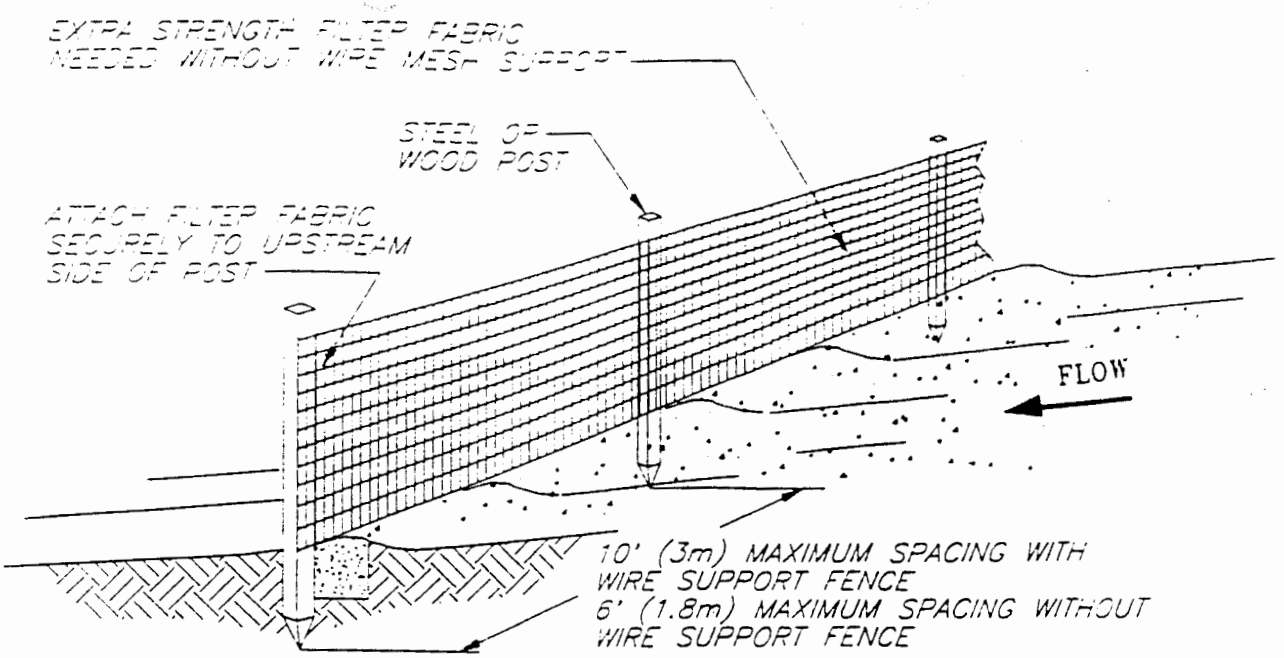

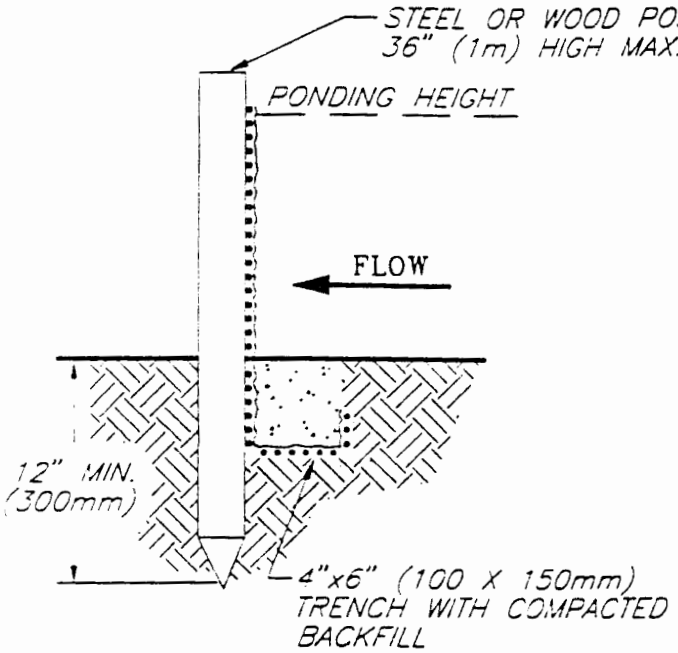

TRENCH DETAIL

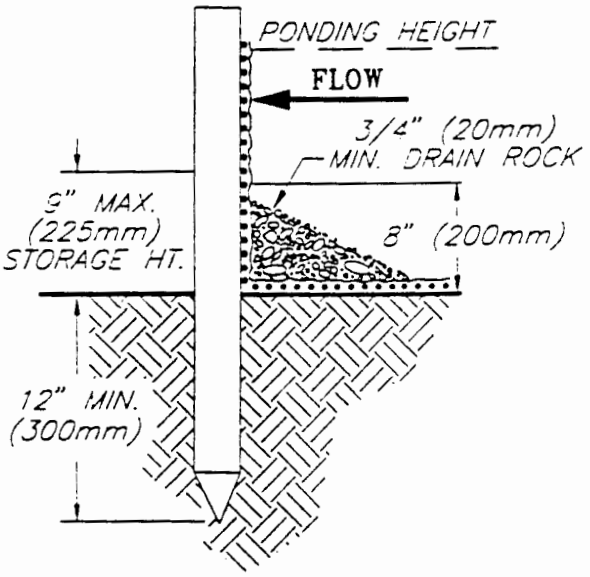

INSTALLATION WITHOUT TRENCHING

NOTES:

1. SILT FENCE SHALL BE PLACED ON SLOPE CONTOURS TO MAXIMIZE PONDING EFFICIENCY.

2. INSPECT AND REPAIR FENCE AFTER EACH STORM EVENT AND REMOVE SEDIMENT WHEN NECESSARY. 9" (225mm) MAXIMUM RECOMMENDED STORAGE HEIGHT.

3. REMOVED SEDIMENT SHALL BE DEPOSITED TO AN AREA THAT WILL NOT CONTRIBUTE SEDIMENT OFF-SITE AND CAN BE PERMANENTLY STABILIZED.

NOT TO SCALE

FILE: SILTFENC

STRAW BALE BARRIER

GENERAL DESCRIPTION:

A straw bale barrier is a temporary sediment retention control. These barriers are designed for sheet flow runoff and detain sediment by ponding water and allowing sediment particles to settle out. They are also effective in reducing runoff velocity and minimizing erosion. Straw bale barriers are typically placed across a slope, at the toe of a slope, or around the perimeter of construction sites and land disturbing activities.

PROS:

- Inexpensive control
- Easy to install
- Easy to inspect
- Effective in detaining sediment from sheet flow runoff

CONS:

- Appropriate only for small drainage areas (approximately one acre or less)
- Appropriate only for low velocity flows (approximately less than 0.5 cfs)
- Upslope grade perpendicular to the fence should not exceed 2:1
- May require continual maintenance
- Life span is much shorter than that of a silt fence

INSTALLATION GUIDELINES:

- When placed at the toe of a slope, straw bales should be installed a minimum of 5-6 feet from the slope.
- Ponding and sediment storage height shall not exceed one half the height of the bale.
- Barriers should be no more than one bale high.
- Bales should be embedded in a trench that has been excavated to a minimum depth of 4 inches.
- Backfill material shall be firmly compacted.
- Bales should tightly abut one another.
- If the bales are bound with wire, place the bales so the wire does not contact the soil.
- When placed on a slope, anchor the bales in place with two 2 x 2 inch stakes or rebar through each bale. The first stake shall be driven toward the previously laid bale to force the bales tightly together, and stakes shall be driven into the ground a minimum of 18 inches.
- If used on a relatively flat surface in conjunction with regular inspections, the straw bales do not need to be anchored.
- Gaps between bales should be filled, and backfill material should be tamped to prevent erosional displacement.

INSPECTION AND MAINTENANCE:

- For active field operations, straw bale barriers shall be inspected weekly and following each storm event producing greater than 0.5 inches of precipitation.
- When site activity has ceased and significant surface runoff is not likely (arid season), inspections shall be conducted at least every other month and following each storm event producing greater than 0.5 inches of precipitation.
- If an additional inspection frequency is specified within a Storm Water Pollution Prevention (SWPP) Plan, this frequency shall be followed.
- Inspections shall be documented on the BMP Inspection and Maintenance Form.
- Inspectors should identify in particular:

    - Correct installation.
    - Effectiveness in controlling sediment transport and erosion.
    - Damage that has occurred since the last inspection.
    - Required maintenance.
    - Sediment accumulations and the need to remove the accumulations.
    - Evidence of erosion or other damage in the surrounding area.
- Closely inspect bales for deterioration.
- Accumulated sediment shall be removed when it reaches 1/2 to 1/3 the height of the bale.
- Removed sediment accumulations shall not be placed within any drainage, either above or below the BMP.
- Removed sediment shall be stabilized to prevent future migration from storm water runoff.
- Required repairs should be conducted immediately and documented in the current or next inspection record.

Environmental media (e.g. soil, sediment, surface and ground water) is not considered waste. However, contaminated environmental media may constitute solid waste and/or hazardous waste. If there is any potential for accumulated sediment to be contaminated, a waste determination must be made and documented. For guidance, see the Laboratory's LIRs on Radioactive Waste, Managing Solid Waste, and Hazardous and Mixed Waste Requirements for Generators.

Inspection plans and records shall be maintained by the owner/operator, and made available for future regulatory inspections.

REMOVAL CRITERIA:

- Straw bale barriers shall be removed when the area has been permanently stabilized with structural controls or vegetation.
- Final vegetative stabilization is defined as 70% of the vegetative cover that would exist under normal site conditions. This determination shall be made by the Water Quality & Hydrology Group (ESH-18).

For assistance with BMP selection, installation, or maintenance, please contact ESH-18 at 665-4752.

STRAW BALE BARRIER

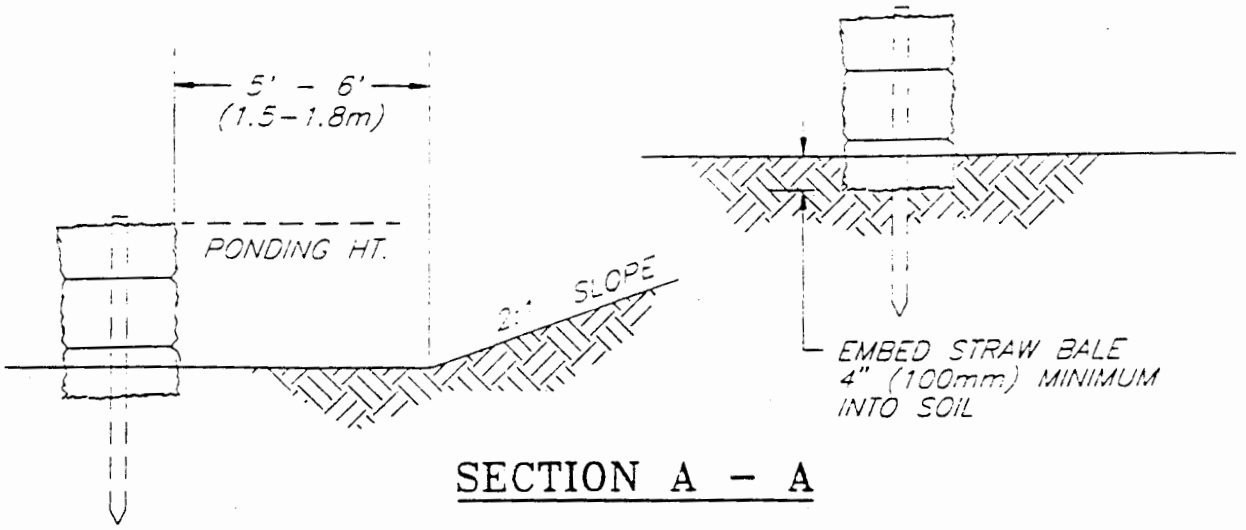

SECTION A - A

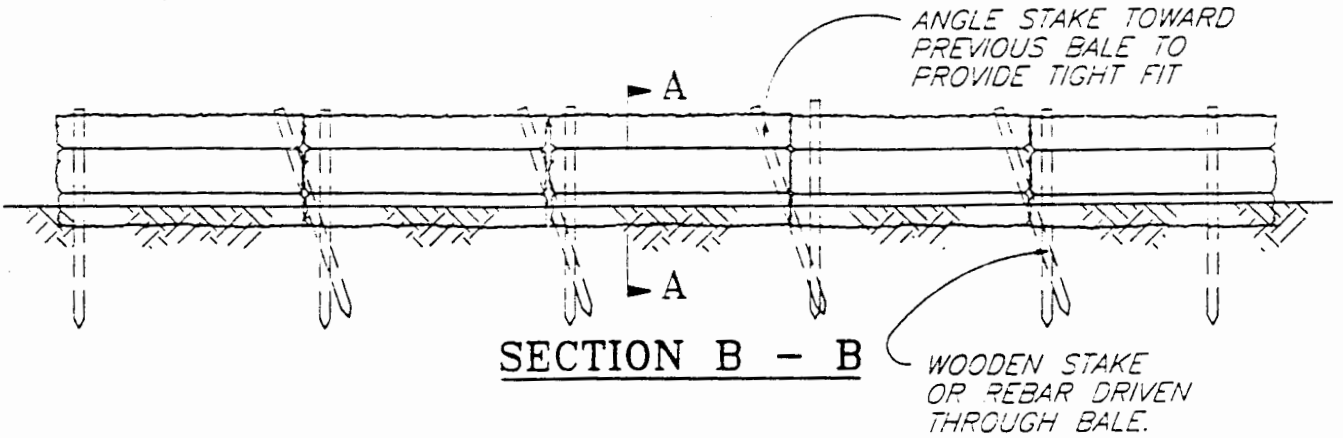

SECTION B - B

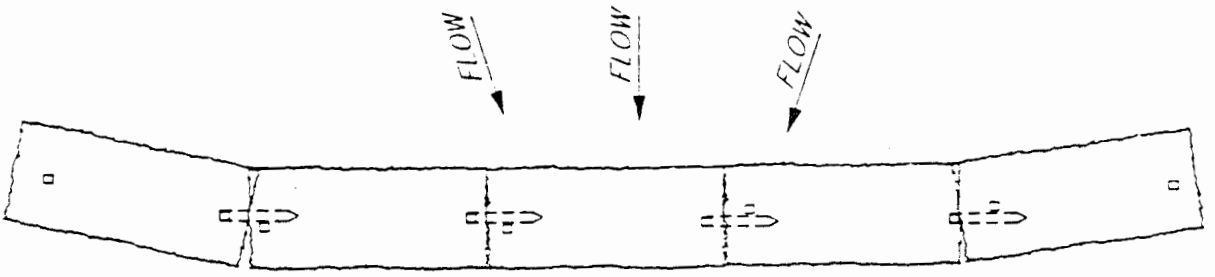

PLAN

NOTES:

1. THE STRAW BALES SHALL BE PLACED ON SLOPE CONTOUR.
2. BALES TO BE PLACED IN A ROW WITH THE ENDS TIGHTLY ABUTTING.
3. KEY IN BALES TO PREVENT EROSION OR FLOW UNDER BALES.

BRUSH BARRIER

GENERAL DESCRIPTION:

A brush barrier is a temporary sediment retention control composed of cleared or grubbed materials such as brush, tree limbs, weeds or grasses, root material, soil and rock. When piled together and placed at the toe of a slope or at the bottom perimeter of a disturbed area, these material reduce runoff velocity and trap and retain sediment. Brush barriers can be constructed by either binding material together with twine or by placing filter fabric over the piled material. The use of filter fabric increases filtering efficiency.

PROS:

- Inexpensive to construct
- Constructed from onsite waste material, minimizing disposal volumes
- Easy to install
- Requires very little maintenance
- If applicable to site conditions, the barrier will naturally decompose over time

CONS:

- Appropriate only for small drainage areas (approximately one acre or less)
- Cannot be placed in drainage channels or at the toe of steep slopes (greater than 2:1)
- Has limited sediment retention and cannot be used in place of a sediment trap
- If constructed without filter fabric, may be unsightly in appearance

INSTALLATION GUIDELINES:

- When placed at the toe of a slope, the barrier should be installed a minimum of 5-6 feet from the slope.
- Pile barrier material uniformly in a row, minimizing voids.
- Minimize the amount of top soil included with the barrier material.
- To minimize the possibility of leaching, do not use wood chips.
- Ensure that brush and tree limbs are not removed from an area of contamination.
- Ponding height should not exceed more than 2/3 the height of the barrier.

Vegetation Only

- Large material such as brush and tree limbs shall bound together with twine or other suitable material.
- Fill gaps with appropriate loose material.
- To anchor the barrier, place wooden stakes along the downhill edge. Stakes shall be driven into the ground a minimum of 12 inches.
- Stakes shall be spaced a maximum of 10 feet apart.

Filter Fabric

- Along the uphill edge of the barrier, excavate a trench 4 inches wide and a minimum of 6 inches deep.
- Drape filter fabric over the barrier, extending the fabric into the trench.
- Bury the filter fabric to a minimum depth of 6 inches.
- Backfill the trench and firmly compact the soil.
- On the downhill side of the barrier, approximately 1-2 feet from the edge, stakes shall be driven into the ground a minimum of 12 inches. Stakes shall be spaced a maximum of 10 feet apart.
- Anchor the downhill edge of the fabric by tying twine, or other suitable material, from the fabric to the stakes.

INSPECTION AND MAINTENANCE:

- For active field operations, brush barriers shall be inspected weekly and following each storm event producing greater than 0.5 inches of precipitation.
- When site activity has ceased and significant surface runoff is not likely (arid season), inspections shall be conducted at least every other month and following each storm event producing greater than 0.5 inches of precipitation.
- If an additional inspection frequency is specified within a Storm Water Pollution Prevention (SWPP) Plan, this frequency shall be followed.
- Inspections shall be documented on the BMP Inspection and Maintenance Form.
- Inspectors should identify in particular:
    - Correct installation.
    - Effectiveness in controlling sediment transport and erosion.
    - Damage that has occurred since the last inspection.
    - Required maintenance.
    - Sediment accumulations and the need to remove the accumulations.
    - Evidence of erosion or other damage in the surrounding area.
- Inspect the filter fabric for tears or other damage.
- Inspect the barrier for areas breached by concentrated flows.
- Accumulated sediment shall be removed when it reaches 1/3 to 1/2 the height of the barrier.
- Removed sediment accumulations shall not be placed within any drainage, either above or below the BMP.
- Removed sediment shall be stabilized to prevent future migration from storm water runoff.
- Required repairs should be conducted immediately and documented in the current or next inspection record.

Environmental media (e.g. soil, sediment, surface and ground water) is not considered waste. However, contaminated environmental media may constitute solid waste and/or hazardous waste. If there is any potential for accumulated sediment to be contaminated. a waste determination must be made and documented. For guidance, see the Laboratory's LIRs on Radioactive Waste, Managing Solid Waste, and Hazardous and Mixed Waste Requirements for Generators.

Inspection plans and records shall be maintained by the owner/operator, and made available for future regulatory inspections.

REMOVAL CRITERIA:

- Brush barriers shall not be removed until the area has been permanently stabilized with structural controls or vegetation.
- Final vegetative stabilization is defined as 70% of the vegetative cover that would exist under normal site conditions. This determination shall be made by the Water Quality & Hydrology Group (ESH-18).

For assistance with BMP selection, installation, or maintenance, please contact ESH-18 at 665-4752.

BRUSH BARRIER

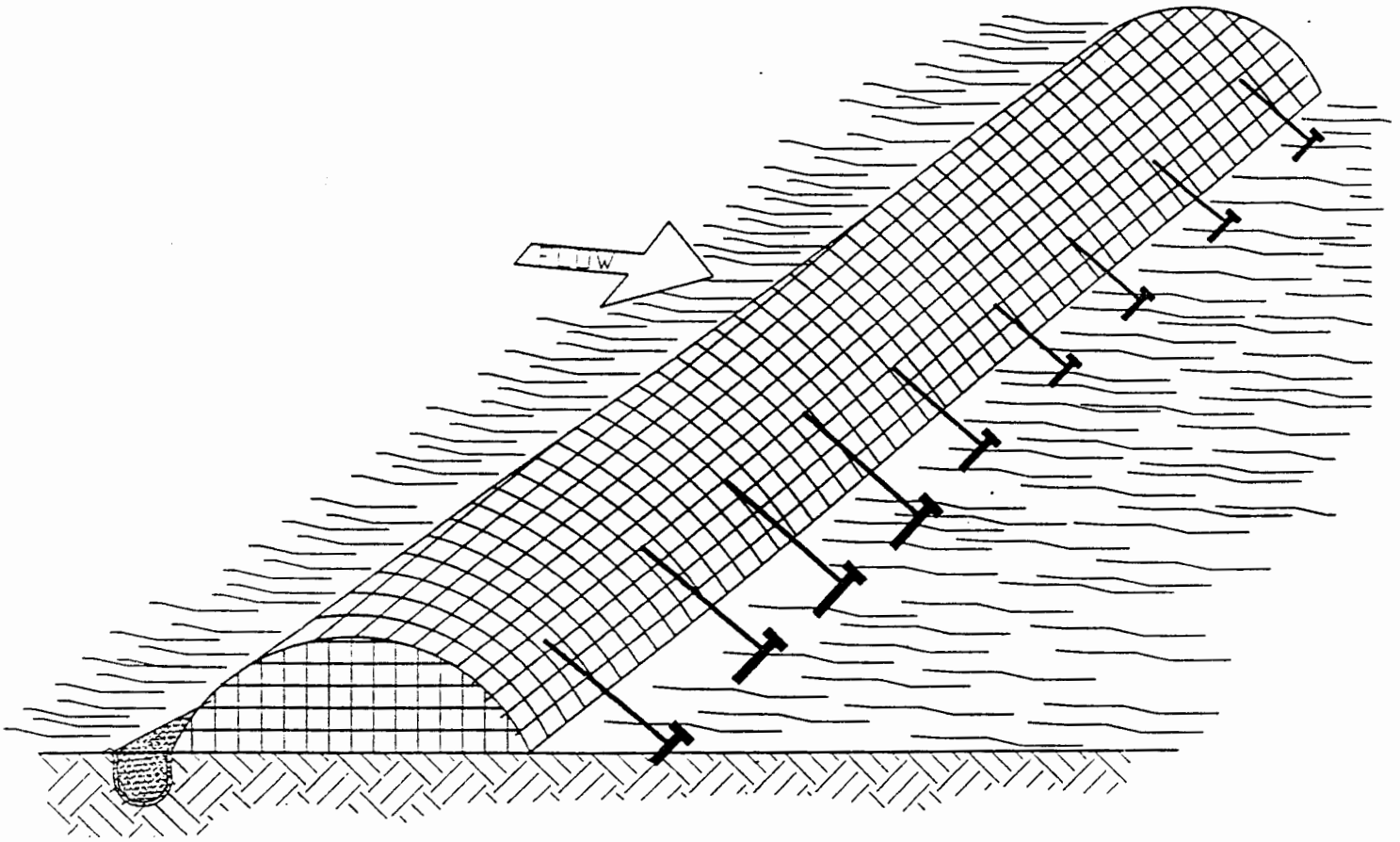

PROFILE

SEDIMENT TRAPS & BASI

GENERAL DESCRIPTION:

Sediment traps and basins are excavated depressions, or naturally low areas with an earthen embankment, used to detain sediment laden runoff while excess sediment settles. Runoff is detained within the trap or basin and released through a controlled outlet structure or a spillway that is usually constructed from stone. The amount of sediment retained, as well as the particle size of the retained sediment, is dependent upon runoff detention time. Sediment traps and basins perform the same function but basins are typically larger in size, serve a larger drainage area, and make use of a controlled outlet structure.

PROS:

- Effective in reducing offsite sediment transport
- Depending on size, can be effective in retaining small and fine sediment particles
- Depending on design, may be used with concentrated and high volume flows
- Minimizes sediment accumulations in downstream storm water conveyances

CONS:

- Requires continual maintenance and accessibility for removal of sediment accumulations
- Accumulated sediment may be difficult to remove
- May occupy large areas that must be avoided during construction activities
- Basins may require additional controls to ensure adherence to applicable safety practices

INSTALLATION GUIDELINES:

- Sediment traps and basins should be designed to be used in conjunction with other BMPs.
- Traps and basins should be located where loss of containment would not cause loss of life or property damage.
- Traps and basins shall not be located in a natural watercourse.
- Traps and basins shall be constructed prior to the start of any land disturbing activities.
- Clear or grub the installation area, removing trees, brush, stumps, and other obstructions.
- Remove vegetation within the installation area to facilitate the cleanout of sediment accumulations.
- Ensure that fill material for embankments is free of roots, woody vegetation, and large stones.
- When constructing embankments, place fill material in 6 inch lifts and compact each lift with a compactor or with the appropriate earth moving equipment.
- When compacting with earth moving equipment, construct the embankment 10% higher than the design elevation to allow for settlement. When using a compactor, construct the embankment 5% higher than the design elevation.
- As soon as practicable, stabilize the embankment with seed, mulch, or matting.

Sediment Trap

- Traps should not be used for drainage areas exceeding 5 disturbed acres.
- Traps shall not be used as permanent structures.
- The embankment height for traps should not exceed 5 feet.
- Ensure that sediment trap cut and fill slopes have a maximum slope of 3:1.
- Spillways should be designed to provide the trap with a 1.5 foot settling zone and a 1 foot sediment storage zone.
- The trap outlet area shall be lined with filter fabric prior to placement of stone or gravel.
- Stones used to construct the spillway should be between 6 and 12 inches in diameter.

Sediment Basin

- Basins should be used for drainage areas exceeding 5 disturbed acres.
- Basin geometry and side slope ratios shall conform to design specifications.
- The volume of a basin should include a settling zone of at least 2 feet and a minimum 1.5 foot sediment storage zone.
- A subsurface drain and/or a solid riser pipe with dewatering holes should be used to provide sufficient runoff detention time.
- The basin entrance should be as far as practicable from the outlet to maximize runoff detention time.
- The riser pipe shall be securely attached to the discharge pipe with all connections being watertight.
- Ensure that the riser and discharge pipe are placed on a firm, smooth soil foundation. Sand, gravel, crushed stone, or other pervious materials shall not be used as backfill around the pipe.
- At the discharge pipe spillway, place fill material around the pipe in 4-inch lifts. Compact the material to at least the same density as the adjacent embankment.
- Construct an emergency spillway with the crest elevation being one foot higher than the end of the riser pipe. Ensure that spillway width, and entrance and exit slopes conform to design specifications.
- Ensure that the emergency spillway is not constructed in fill material and, as soon as practicable, stabilize the emergency spillway with seed, mulch, or matting.
- If the basin outlet is a rock lined spillway, line the outlet area with filter fabric prior to placement of stone or gravel.
- Stones used to construct the spillway should be a minimum of 6 inches in diameter.

INSPECTION AND MAINTENANCE:

- For active field operations, sediment traps and basins shall be inspected weekly and following each storm event producing greater than 0.5 inches of precipitation.
- When site activity has ceased and significant surface runoff is not likely (arid season), inspections shall be conducted at least every other month and following each storm event producing greater than 0.5 inches of precipitation.
- If an additional inspection frequency is specified within a Storm Water Pollution Prevention (SWPP) Plan, this frequency shall be followed.
- Inspections shall be documented on the BMP Inspection and Maintenance Form.
- Inspectors should identify in particular:
    - Correct installation.
    - Effectiveness in controlling runoff and sediment transport.
    - Damage that has occurred since the last inspection.
    - Required maintenance.
    - Sediment accumulations and the need to remove the accumulations.
    - Evidence of erosion or other damage in the surrounding area.
- Closely inspect embankments for undermining, erosion, or other damage.
- Accumulated sediment shall be removed when it exceeds ½ the design sediment storage volume.
- Removed sediment accumulations shall not be placed within any drainage, either above or below the BMP.
- Removed sediment shall be stabilized to prevent future migration from storm water runoff.
- Required repairs should be conducted immediately and documented in the current or next inspection record.

Environmental media (e.g. soil, sediment, surface and ground water) is not considered waste. However, contaminated environmental media may constitute solid waste and/or hazardous waste. If there is any potential for accumulated sediment to be contaminated, a waste determination must be made and documented. For guidance, see the Laboratory's LIRs on Radioactive Waste, Managing Solid Waste, and Hazardous and Mixed Waste Requirements for Generators.

Inspection plans and records shall maintained by the owner/operator, and ma available for future regulatory inspections.

REMOVAL CRITERIA:

- Traps and basins shall not be removed until the disturbed area has been permanently stabilized with structural controls or vegetation.
- Final vegetative stabilization is defined as 70% of the vegetative cover that would exist under normal site conditions. This determination shall be made by the Water Quality & Hydrology Group (ESH-18).

For assistance with BMP selection, installation, or maintenance, please contact ESH-18 at 665-4752.

SEDIMENT TRAP

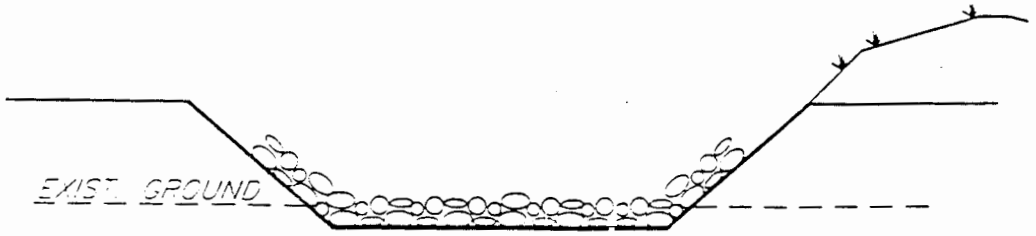

PROFILE

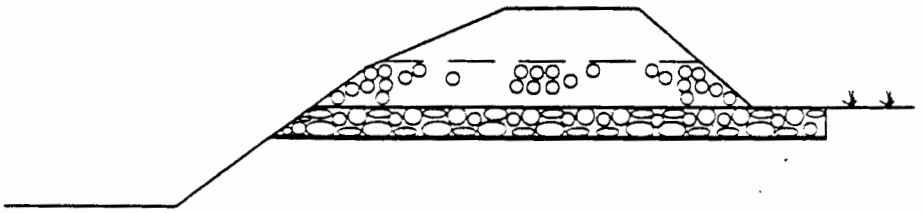

CROSS SECTION

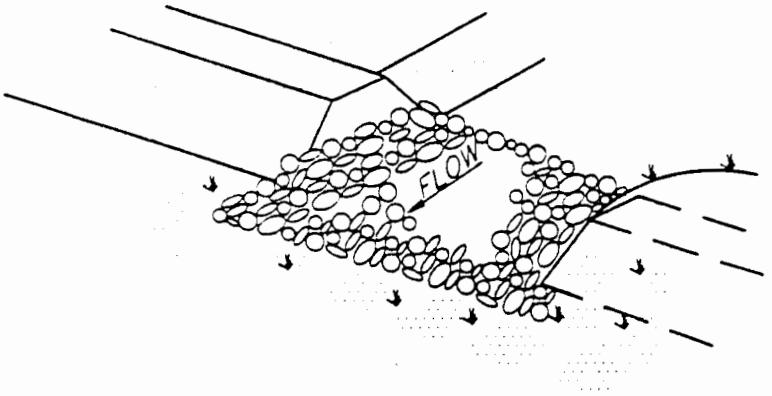

PERSPECTIVE VIEW

TYPICAL SEDIMENT BASIN

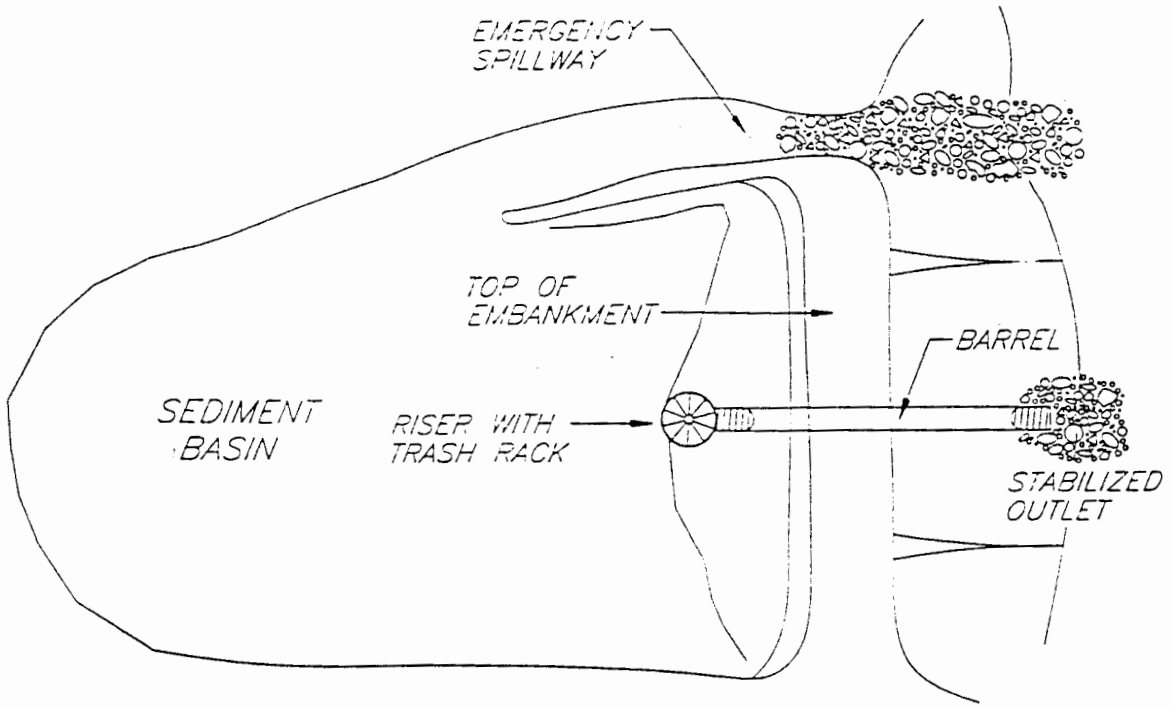

PLAN

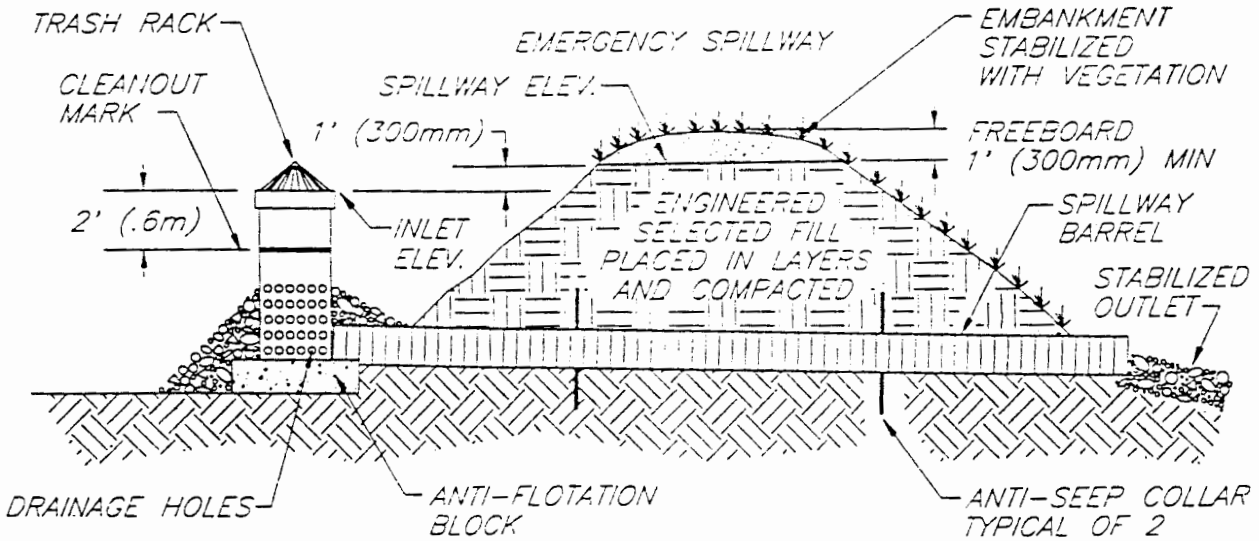

SECTION

NOTES:

1. THE TEMPORARY SEDIMENT BASIN, DESIGNED BY A QUALIFIED PROFESSIONAL, IS REQUIRED FOR DISTURBED AREAS GREATER THAN 5 ACRES WITHIN A DRAINAGE AREA LESS THAN 100 ACRES.
2. THE SEDIMENT BASIN WILL BE REMOVED WITHIN 3 YEARS.

TEMPORARY CONSTRUCTION ENTRANCE/EXIT

GENERAL DESCRIPTION:

A temporary construction entrance/exit is a small area that has been stabilized with gravel. This pad is located at the location where vehicles enter and exit a construction site. Its purpose is to filter the sediment that collects on vehicles and eliminate off-site tracking of sediment.

PROS:

- Easy to install
- Easy to inspect
- Minimal cost to construct
- Effective in reducing off-site sediment transport

CONS:

- Requires continual maintenance
- Depending upon soil conditions, may be difficult to clean out sediment
- Location is dependent upon proximity to water sources and storm drains

INSTALLATION GUIDELINES:

- The gravel used for pad construction shall be 2-3 inch maximum size aggregate.
- Gravel placement shall conform to the grade and dimensions shown on the design drawings.
- If required, geotextile fabrics should be used to improve the stability of the pad foundation.
- Gravel shall be spread to a minimum thickness of 6 inches.
- The pad shall extend the full width of the entrance/exit. Minimum pad width shall be 12 feet.
- Minimum pad length shall be 50 feet.
- If possible, entrance/exit pads shall not be placed on steep grades or at curves in public roads.
- Controls shall be established to prevent sediment from the pad from entering storm drains or other watercourses.

INSPECTION AND MAINTENANCE:

- For active field operations, temporary construction entrance/exits shall be inspected weekly and following each storm event producing greater than 0.5 inches of precipitation.
- When site activity has been reduced to periodic traffic and significant surface runoff is not likely (arid season), inspections shall be conducted at least every other month and following each storm event producing greater than 0.5 inches of precipitation.
- If an additional inspection frequency is specified within a Storm Water Pollution Prevention (SWPP) Plan, this frequency shall be followed.
- Inspections shall be documented on the BMP Inspection and Maintenance Form.
- Inspectors should identify in particular:
    - Correct installation.
    - Effectiveness in controlling sediment transport.
    - Damage that has occurred since the last inspection.
    - Required maintenance.
    - Sediment accumulations and the need to remove the accumulations.
    - Evidence of erosion or other damage in the surrounding area.
- As required, add additional layers of gravel to the pad to prevent off-site tracking of sediment.
- Replace gravel as required.

- Removed sediment accumul[illegible]ns shall not be placed within any drainage, [illegible]ner above or below the BMP.
- Removed sediment shall be stabilized to prevent future migration from storm water runoff.
- Required repairs should be conducted immediately and documented in the current or next inspection record.

Environmental media (e.g. soil, sediment, surface and ground water) is not considered waste. However, contaminated environmental media may constitute solid waste and/or hazardous waste. If there is any potential for accumulated sediment to be contaminated, a waste determination must be made and documented. For guidance, see the Laboratory's LIRs on Radioactive Waste, Managing Solid Waste, and Hazardous and Mixed Waste Requirements for Generators.

Inspection plans and records shall be maintained by the owner/operator, and made available for future regulatory inspections.

REMOVAL CRITERIA:

- Temporary construction entrance/exits shall be removed when the area has been permanently stabilized, or when all construction activities have ceased.
- Final stabilization is defined as 70% of the vegetative cover that would exist under normal site conditions. This determination shall be made by the Water Quality & Hydrology Group (ESH-18).

For assistance with BMP selection, installation, or maintenance, please contact ESH-18 at 665-4752.

TEMPORARY GRAVEL CONSTRUCTION ENTRANCE/EXIT

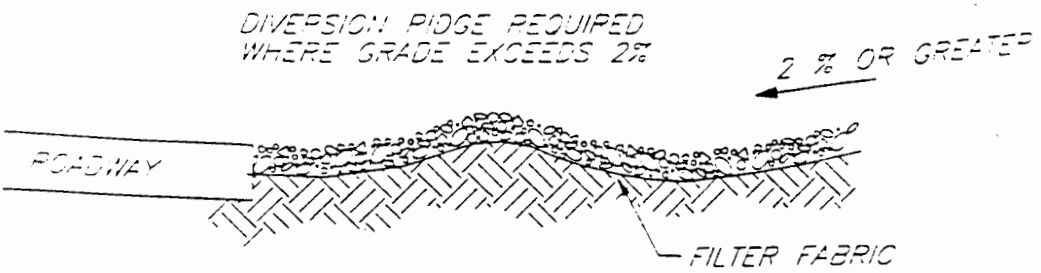

SECTION A – A

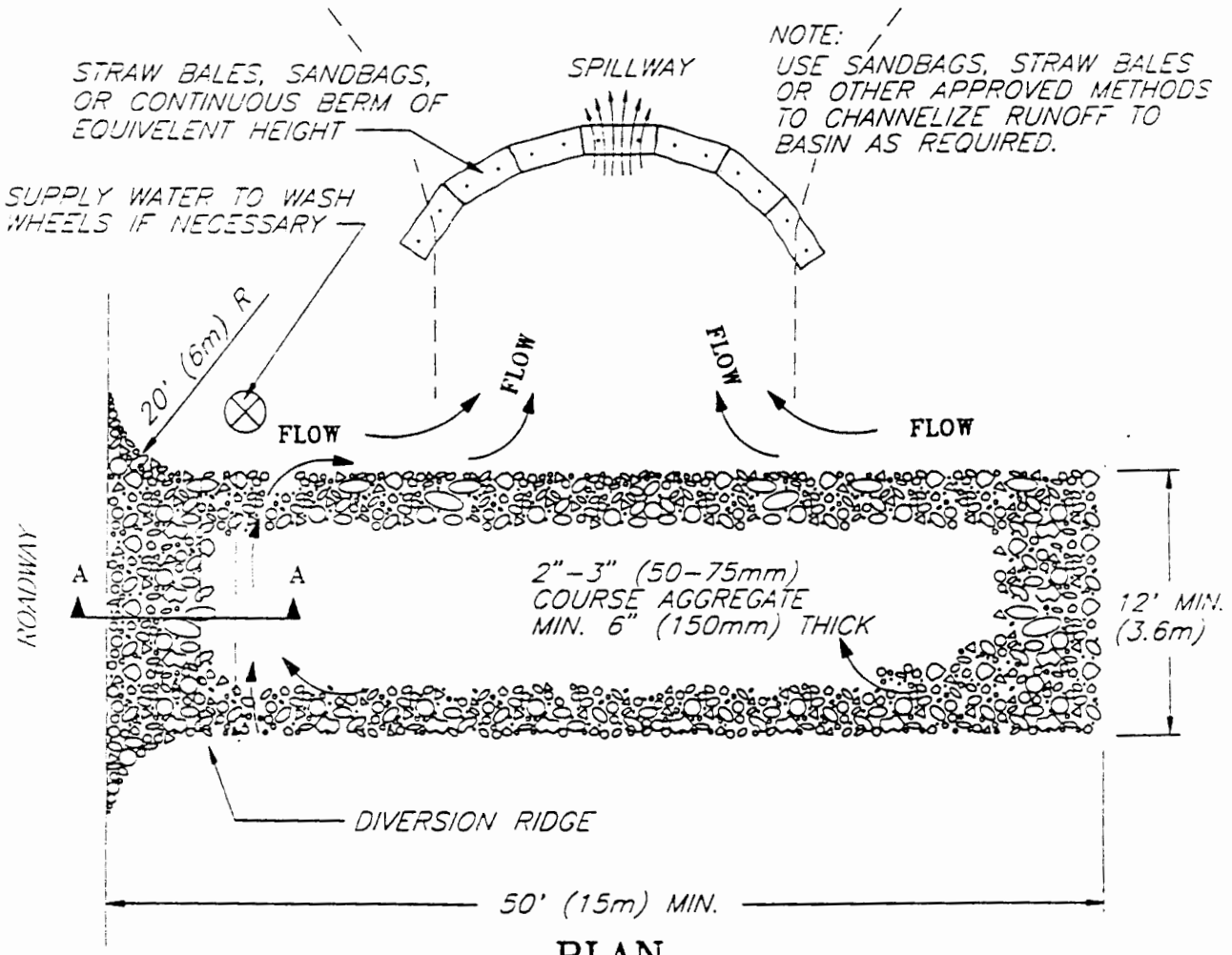

PLAN

NOTES:

1. THE ENTRANCE SHALL BE MAINTAINED IN A CONDITION THAT WILL PREVENT TRACKING OR FLOWING OF SEDIMENT ONTO PUBLIC RIGHT-OF-WAYS. THIS MAY REQUIRE TOP DRESSING, REPAIR AND/OR CLEANOUT OF ANY MEASURES USED TO TRAP SEDIMENT.

2. WHEN NECESSARY, WHEELS SHALL BE CLEANED PRIOR TO ENTRANCE ONTO PUBLIC RIGHT-OF-WAY.

3. WHEN WASHING IS REQUIRED, IT SHALL BE DONE ON AN AREA STABLIZED WITH CRUSHED STONE THAT DRAINS INTO AN APPROVED SEDIMENT TRAP OR SEDIMENT BASIN.

STORM DRAIN INLET PROTECTION

GENERAL DESCRIPTION:

A storm drain inlet protection is a temporary sediment barrier that is placed around either a drop or curb drain inlet. The barriers prevent sediment from entering a storm drain by ponding runoff and allowing sediment to settle out. These barriers are also designed to allow overflow from large storm events. Inlet protection is most commonly constructed from straw bales, sandbags, filter fabric, and concrete blocks and gravel.

PROS:

- Easy to inspect
- Prevents silting-in of storm drain inlets
- Effective in reducing off-site sediment transport

CONS:

- Requires continual maintenance
- Accumulated sediment may be difficult to remove
- Practical only for relatively low volume flows

INSTALLATION GUIDELINES:

- Installation of inlet protection shall precede soil disturbing activities.
- Inlet protection material shall correspond to site conditions and the size of the drainage area.
- Inlet protection should be used in combination with other controls.
- Protection barriers should be placed on gentle slopes to facilitate ponding.
- Barrier placement shall allow for overflow from a large storm event. Overflow shall not be bypassed over the curb.

Sandbags

- Sandbag material shall be a type of geotextile fabric that will not rapidly deteriorate.
- Fill sandbags with 3/4 inch drain rock or 1/4 inch pea gravel.
- Sandbags shall be placed in a curved row with the ends curved and pointing uphill.
- Sandbags should be packed tightly and placed in overlapping layers.
- To allow overflow, form a spillway in the sandbag structure by leaving a one-sandbag gap in the top row.

Straw Bale

- Straw bales shall be embedded within a trench around the inlet. The trench should be as wide as a straw bale and excavated to a minimum depth of 4 inches.
- If the bales are bound with wire, place the bales so the wire does not contact the soil.
- Orient the straw bales lengthwise around the inlet.
- Anchor the bales in place with two 2 x 2 inch stakes or rebar through each bale.
- Fill void spaces between the bales as necessary.

Filter Fabric

- Filter fabric shall be attached to steel or 2 by 4 inch wood support posts. Posts shall have a minimum length of 3 feet and a maximum spacing of 3 feet. A top frame support is recommended.
- Measured from the top of the inlet, the maximum height of the silt fence shall be a 1.5 feet.
- Bury the bottom of the silt fence in 4 inch wide by 6 inch deep trench.
- The excavated trench shall be backfilled with soil and firmly tamped.

Concrete Blocks & Gravel

- Blocks shall be embedded within a trench around the inlet. The trench should be as wide as a block and excavated to a minimum depth of 3 inches.
- Place the blocks around the inlet, tightly abutting the ends.
- If the blocks being used have openings, place wire mesh or filter fabric over the openings.
- To assist in sediment retention, backfill the blocks with ¾ - 2 inch gravel. Firmly compact the backfill.

INSPECTION AND MAINTENANCE:

- For active field operations, storm drain inlet protections shall be inspected weekly and following each storm event producing greater than 0.5 inches of precipitation.
- When site activity has ceased and significant surface runoff is not likely (arid season), inspections shall be conducted at least every other month and following each storm event producing greater than 0.5 inches of precipitation.
- If an additional inspection frequency is specified within a Storm Water Pollution Prevention (SWPP) Plan, this frequency shall be followed.
- Inspections shall be documented on the BMP Inspection and Maintenance Form.
- Inspectors should identify in particular:
    - Correct installation.
    - Effectiveness in controlling sediment transport.
    - Damage that has occurred since the last inspection.
    - Required maintenance.
    - Sediment accumulations and the need to remove the accumulations.
    - Evidence of erosion or other damage in the surrounding area.
- Inspect inlet barriers for the accumulation of trash.
- Replace materials as required.
- Accumulated sediment shall be removed when it reaches 1/3 to 1/2 the height of the inlet protection.
- Removed sediment accumulations shall not be placed within any drainage, either above or below the BMP.
- Removed sediment shall be stabilized to prevent future migration from storm water runoff.
- Required repairs should be conducted immediately and documented in the current or next inspection record.

Environmental media (e.g. soil, sediment, surface and ground water) is not considered waste. However, contaminated environmental media may constitute solid waste and/or hazardous waste. If there is any potential for accumulated sediment to be contaminated, a waste determination must be made and documented. For guidance, see the Laboratory's LIRs on Radioactive Waste, Managing Solid Waste, and Hazardous and Mixed Waste Requirements for Generators.

Inspection plans and records shall be maintained by the owner/operator, and made available for future regulatory inspections.

REMOVAL CRITERIA:

- Storm drain inlet protections shall be removed when the area has been permanently stabilized, or when the construction of permanent storm drain structures has been completed.
- Final stabilization is defined as 70% of the vegetative cover that would exist under normal site conditions. This determination shall be made by the Water Quality & Hydrology Group (ESH-18).

For assistance with BMP selection, installation, or maintenance, please contact ESH-18 at 665-4752.

STRAW BALE/GRAVEL DROP INLET SEDIMENT BARRIER

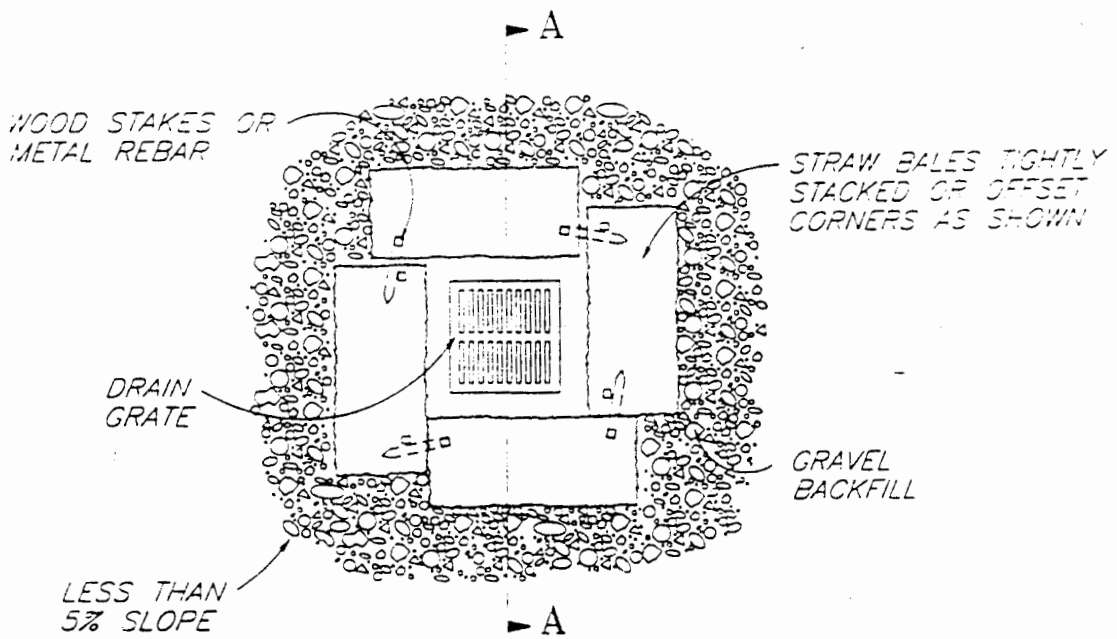

PLAN VIEW

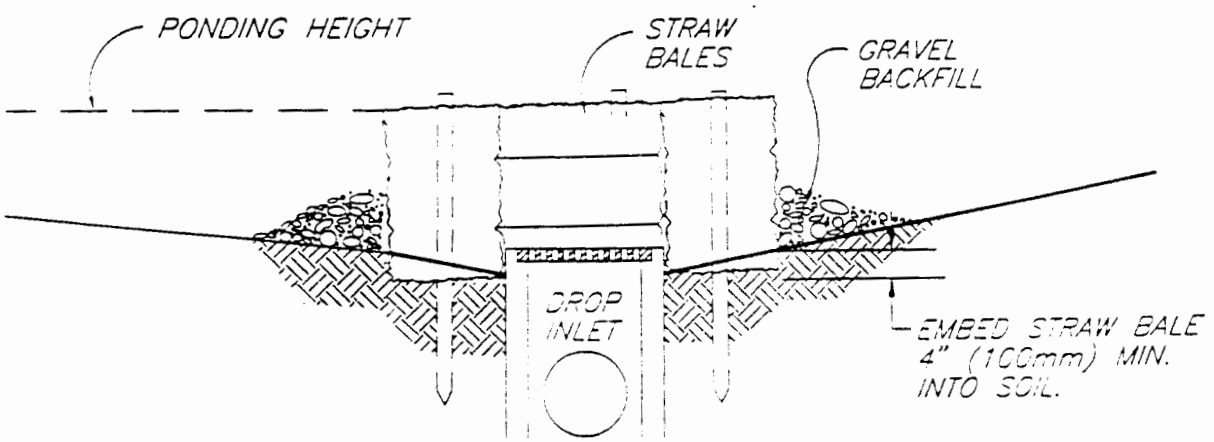

SECTION A–A

NOTES:

1. DROP INLET SEDIMENT BARRIERS ARE TO BE USED FOR SMALL, NEARLY LEVEL DRAINAGE AREAS. (LESS THAN 5%)
2. EMBED THE BALES 4" (100mm) INTO THE SOIL AND OFFSET CORNERS OR PLACE BALES WITH ENDS TIGHTLY ABUTING. GRAVEL BACKFILL WILL PREVENT EROSION OR FLOW AROUND THE BALES.
3. THE TOP OF THE STRUCTURE (PONDING HEIGHT) MUST BE WELL BELOW THE GROUND ELEVATION DOWNSLOPE TO PREVENT RUNOFF FROM BYPASSING THE INLET. EXCAVATION OF A BASIN ADJACENT TO THE DROP INLET OR A TEMPORARY DIKE ON THE DOWNSLOPE OF THE STRUCTURE MAY BE NECESSARY.

CURB INLET SEDIMENT BARRIER (SANDBAGS)

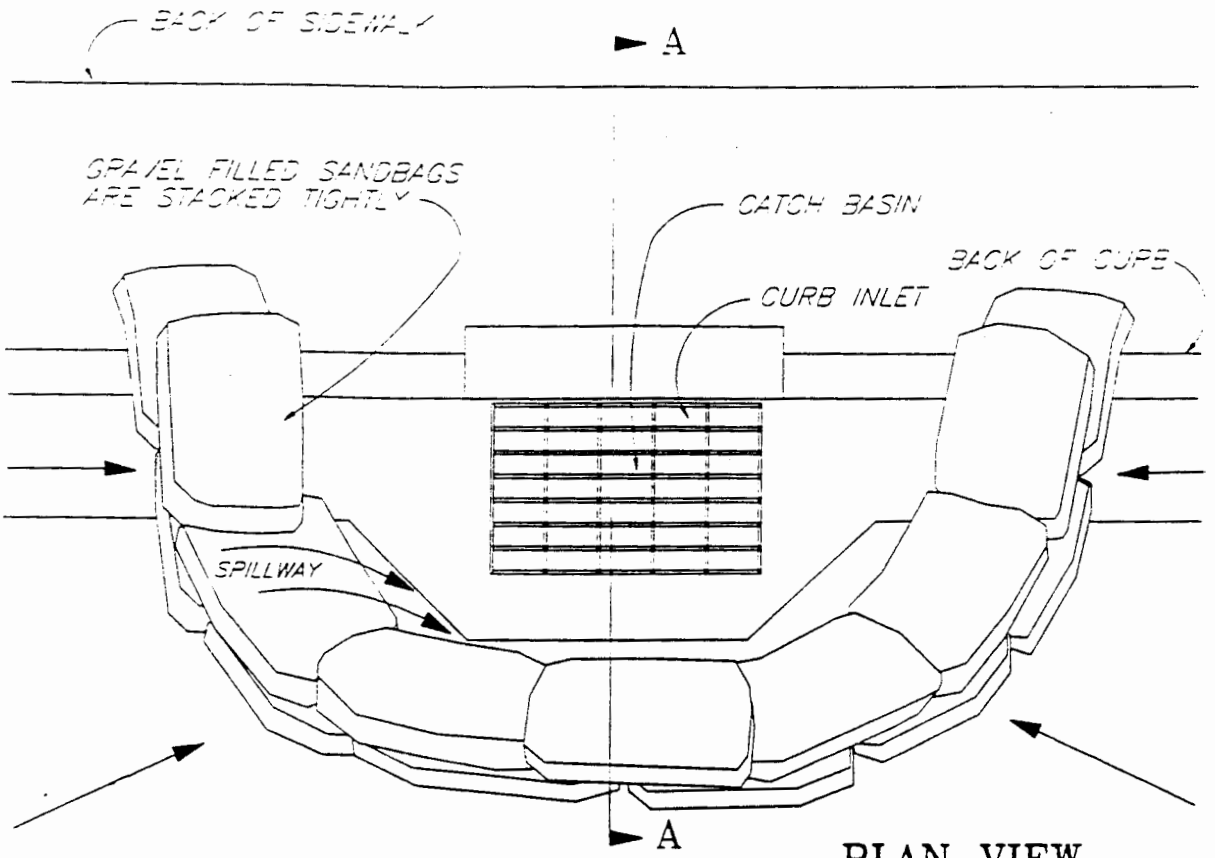

PLAN VIEW

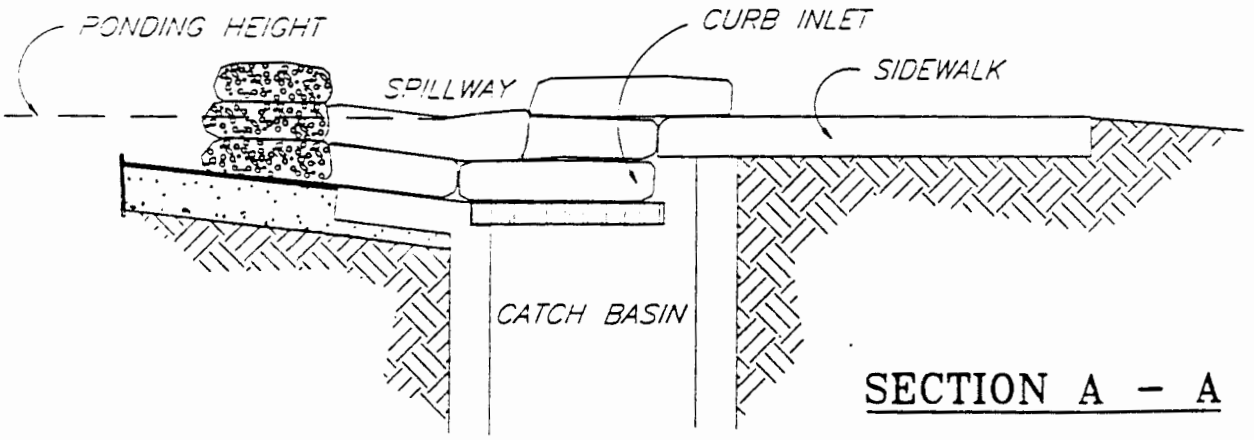

SECTION A – A

NOTES:

1. PLACE CURB TYPE SEDIMENT BARRIERS ON GENTLY SLOPING STREET SEGMENTS WHERE WATER CAN POND AND ALLOW SEDIMENT TO SEPARATE FROM RUNOFF.
2. SANDBAGS, OF EITHER BURLAP OR WOVEN GEOTEXTILE FABRIC, ARE FILLED WITH GRAVEL, LAYERED AND PACKED TIGHTLY.
3. LEAVE ONE SANDBAG GAP IN THE TOP ROW TO PROVIDE A SPILLWAY FOR OVERFLOW.
4. INSPECT BARRIERS AND REMOVE SEDIMENT AFTER EACH STORM EVENT. SEDIMENT AND GRAVEL MUST BE REMOVED FROM THE TRAVELED WAY IMMEDIATELY.

SILT FENCE DROP INLET SEDIMENT BARRIER

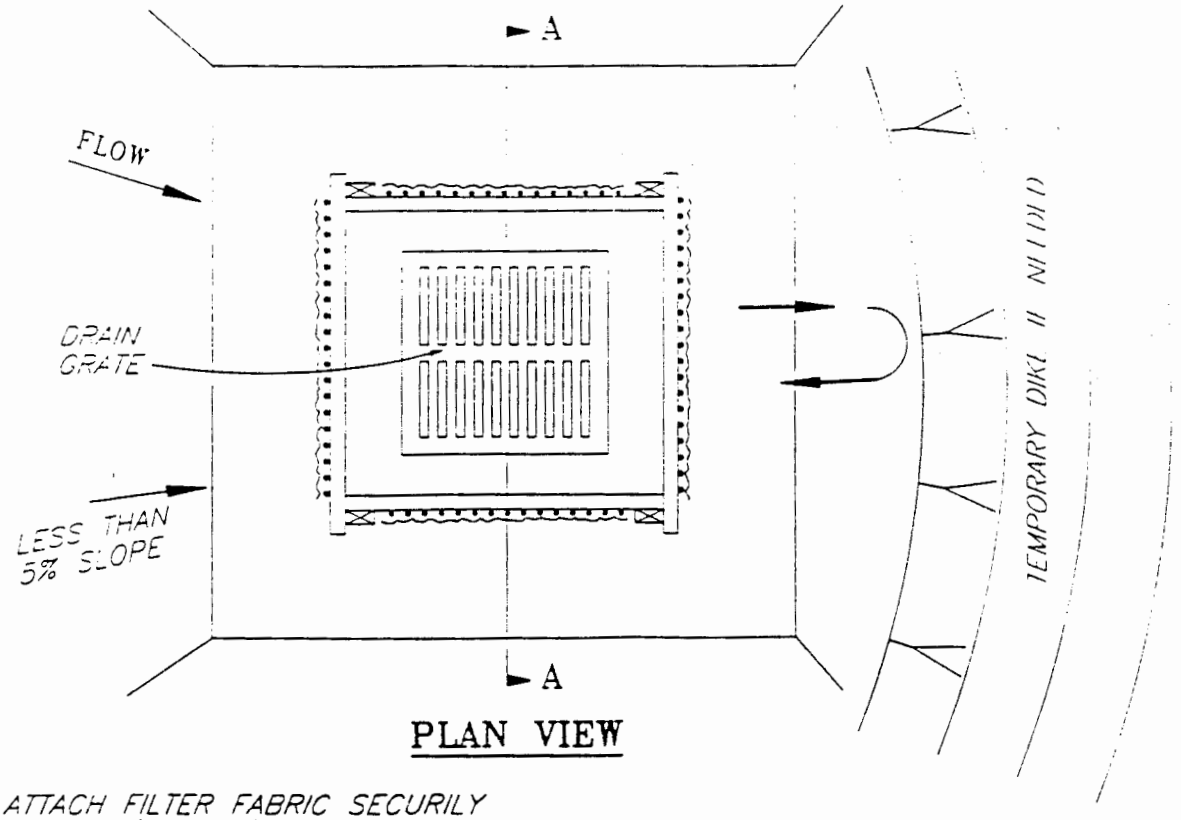

PLAN VIEW

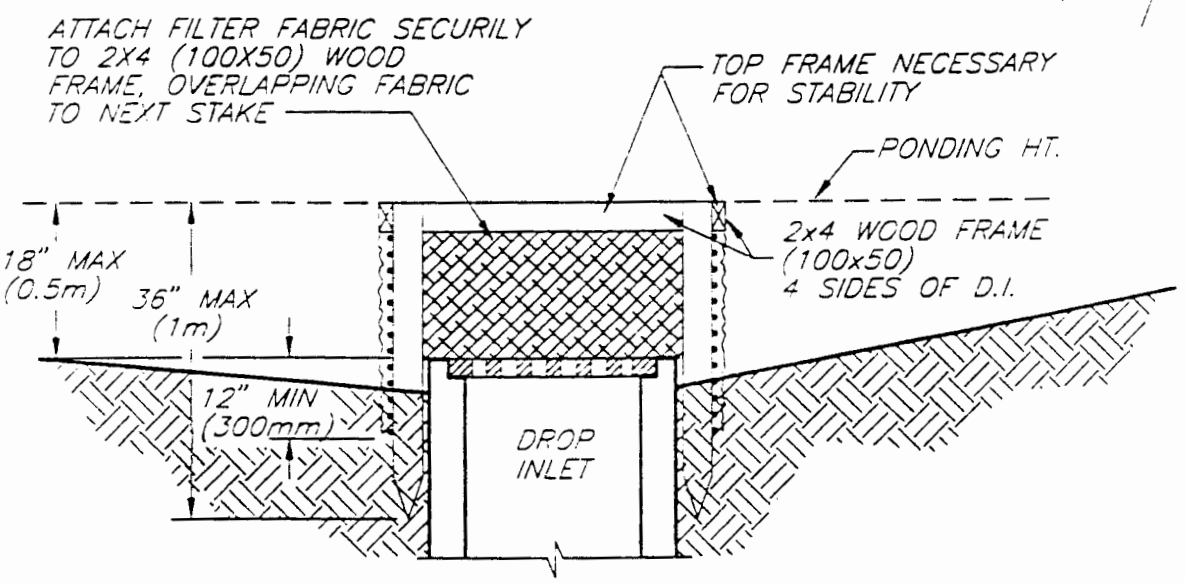

SECTION A–A

NOTES:

1. DROP INLET SEDIMENT BARRIERS ARE TO BE USED FOR SMALL, NEARLY LEVEL DRAINAGE AREAS. (LESS THAN 5%)
2. USE 2"X4" (100X50mm) WOOD OR EQUIVALENT METAL STAKES, 3' (1m) MINIMUM LENGTH.
3. INSTALL 2"X4" (100X50mm) WOOD TOP FRAME TO INSURE STABILITY.
4. THE TOP OF THE FRAME (PONDING HEIGHT) MUST BE WELL BELOW THE GROUND ELEVATION DOWNSLOPE TO PREVENT RUNOFF FROM BY-PASSING THE INLET. A TEMPORARY DIKE MAY BE NECESSARY ON THE DOWNSLOPE SIDE OF THE STRUCTURE.

NOT TO SCALE

BLOCK AND GRAVEL DROP INLET SEDIMENT BARRIER

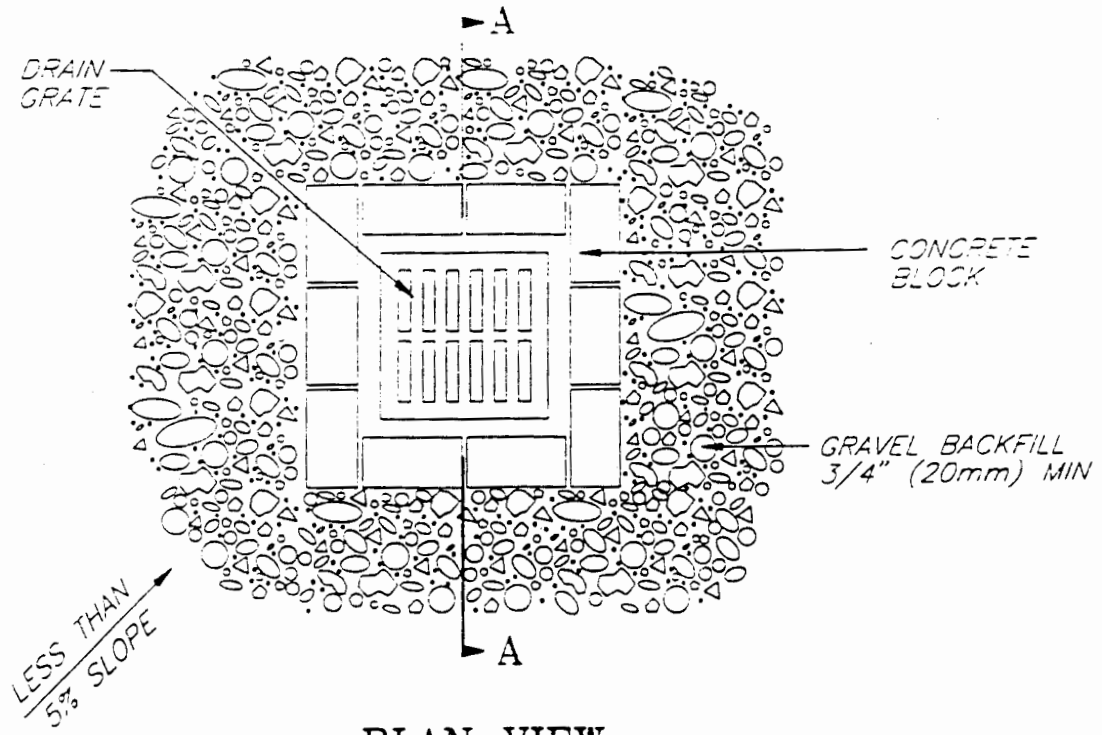

PLAN VIEW

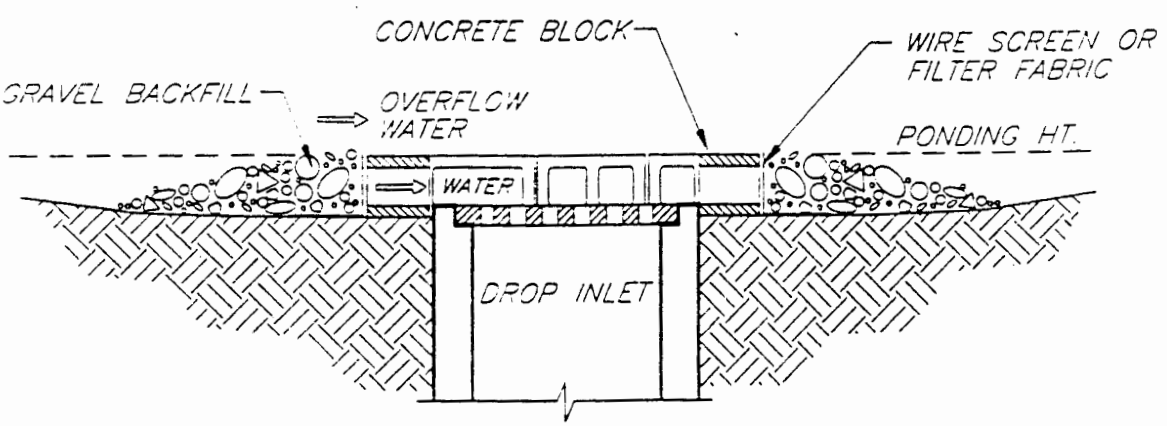

SECTION A – A

NOTES:

1. DROP INLET SEDIMENT BARRIERS ARE TO BE USED FOR SMALL, NEARLY LEVEL DRAINAGE AREAS. (LESS THAN 5%)
2. EXCAVATE A BASIN OF SUFFICIENT SIZE ADJACENT TO THE DROP INLET.
3. THE TOP OF THE STRUCTURE (PONDING HEIGHT) MUST BE WELL BELOW THE GROUND ELEVATION DOWNSLOPE TO PREVENT RUNOFF FROM BYPASSING THE INLET. A TEMPORARY DIKE MAY BE NECESSARY ON THE DOWNSLOPE SIDE OF THE STRUCTURE.

CURB AND GUTTER SEDIMENT BARRIER

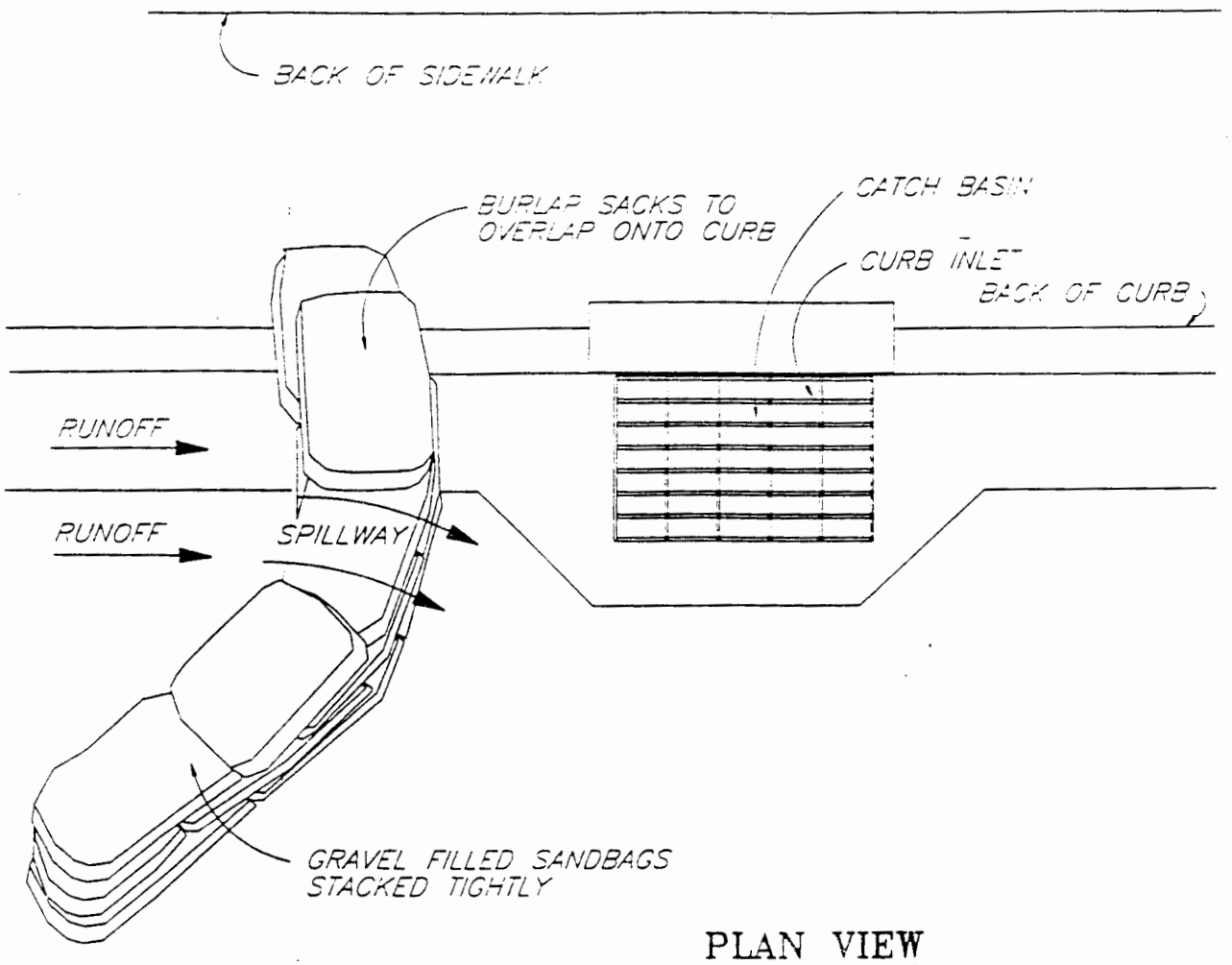

PLAN VIEW

NOTES:

1. PLACE CURB TYPE SEDIMENT BARRIERS ON GENTLY SLOPING STREET SEGMENTS, WHERE WATER CAN POND AND ALLOW SEDIMENT TO SEPARATE FROM RUNOFF.
2. SANDBAGS OF EITHER BURLAP OR WOVEN 'GEOTEXTILE' FABRIC, ARE FILLED WITH GRAVEL, LAYERED AND PACKED TIGHTLY.
3. LEAVE A ONE SANDBAG GAP IN THE TOP ROW TO PROVIDE A SPILLWAY FOR OVERFLOW.
4. INSPECT BARRIERS AND REMOVE SEDIMENT AFTER EACH STORM EVENT. SEDIMENT AND GRAVEL MUST BE REMOVED FROM THE TRAVELED WAY IMMEDIATELY.

BERMS

GENERAL DESCRIPTION:

A berm (also referred to as a dike) is a temporary ridge used to divert runoff. Its most common uses include preventing run-on to an exposed or disturbed area, and diverting the sediment-laden runoff from a disturbed area to a sediment trapping control. When used as a temporary control, berms are most often constructed from compacted soil or loose gravel, stone, or crushed rock. Berms may serve as a permanent structural control when constructed from asphalt, concrete, or other similar material. Often times, to facilitate runoff diversion, a small excavated depression is constructed adjacent to the berm. This depression, or small channel, is referred to as a swale. For guidance on the function of a swale, see the section on channels, page 45.

PROS:

- Effective in diverting the runoff from upslope drainages away from unprotected areas
- Efficient method of controlling sediment-laden runoff
- Easy to inspect
- Minimal maintenance costs if installed properly
- If designed properly, may be used as a permanent structure

CONS:

- Cannot be used if the upslope gradient is too great, resulting in high velocity flows
- Earth berms may require vegetative stabilization to prevent erosion of the berm itself
- May be more expensive than other methods if on-site materials cannot be used
- Limited life span if subject to significant vehicular traffic

INSTALLATION GUIDELINES:

- Berms shall be constructed during initial land-disturbing activities and must be operational prior to upslope land disturbance.
- Berms should be constructed in areas with shallow slopes.
- Where applicable, on-site material should be used for berm construction.
- Berms should be adequately compacted to prevent failure.
- When used as a perimeter or downslope control, berms shall divert runoff to a sediment trapping control such as a sediment trap or basin.
- Berms shall be located so as to minimize damage by construction operations and traffic.

Earth Berm

- For areas with little or no construction traffic, earth berms may be constructed.
- For earth berms, temporary or permanent vegetative controls shall be applied upon completion of construction to prevent erosion of the berm itself.

Gravel Berm

- For areas with significant construction traffic, gravel berms should be constructed.
- Well graded gravel or crushed rock shall be used to construct gravel berms.

INSPECTION AND MAINTENANCE:

- For active field operations, berms shall be inspected weekly and following each storm event producing greater than 0.5 inches of precipitation.
- When site activity has ceased and significant surface runoff is not likely (arid season), inspections shall be conducted at least every other month and following each storm event producing greater than 0.5 inches of precipitation.

- If an additional inspection frequency is specified within a Storm Water Pollution Prevention (SWPP) Plan, this frequency shall be followed.
- Inspections shall be documented on the BMP Inspection and Maintenance Form.
- Inspectors should identify in particular:
    - Correct installation.
    - Effectiveness in controlling storm water runoff, erosion, and sediment transport.
    - Damage that has occurred since the last inspection. *Most notably*: erosion of the berm from runoff and damage from vehicle traffic.
    - Required maintenance.
    - Sediment accumulations and the need to remove the accumulations.
    - Evidence of erosion or other damage in the surrounding area.
- Berms designed to trap sediment shall, at a minimum, be cleaned out after each significant storm event.
- Damage from vehicle or construction traffic shall be repaired prior to the end of each working day.
- Conduct required repairs immediately and document them in the current or next inspection record.

Environmental media (e.g. soil, sediment, surface and ground water) is not considered waste. However, contaminated environmental media may constitute solid waste and/or hazardous waste. If there is any potential for accumulated sediment to be contaminated, a waste determination must be made and documented. For guidance, see the Laboratory's LIRs on Radioactive Waste, Managing Solid Waste, and Hazardous and Mixed Waste Requirements for Generators.

Inspection plans and records shall be maintained by the owner/operator, and made available for future regulatory inspections.

REMOVAL CRITERIA:

- Berms shall not be removed until the disturbed or exposed area has been stabilized with permanent structural or vegetative controls.
- Final vegetative stabilization is defined as 70% of the vegetative cover that would exist under normal site conditions. This determination shall be made by the Water Quality & Hydrology Group (ESH-18).

For assistance with BMP selection, installation, or maintenance, please contact ESH-18 at 665-4752.

EARTH BERM

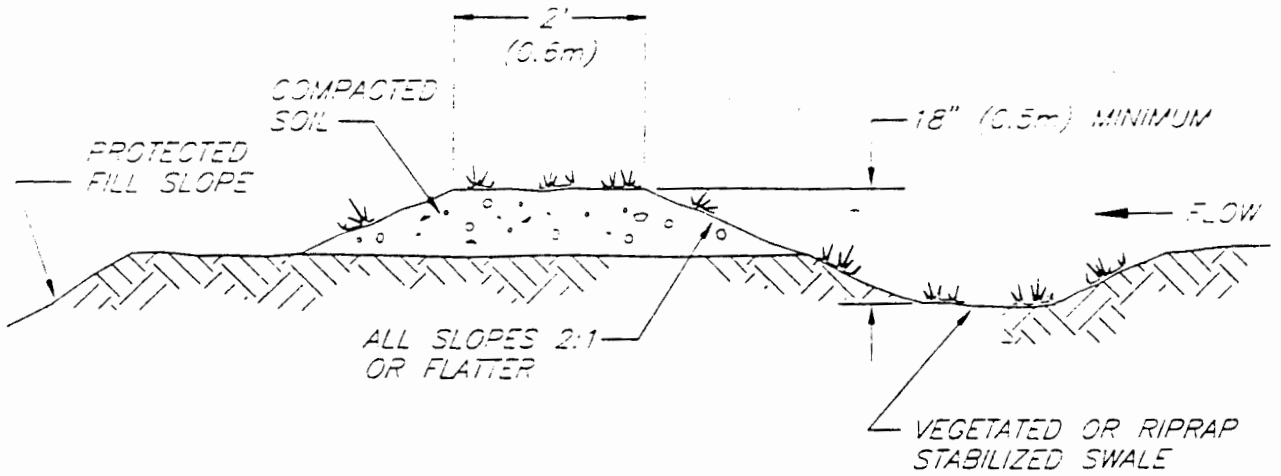

TYPICAL FILL DIVERSION

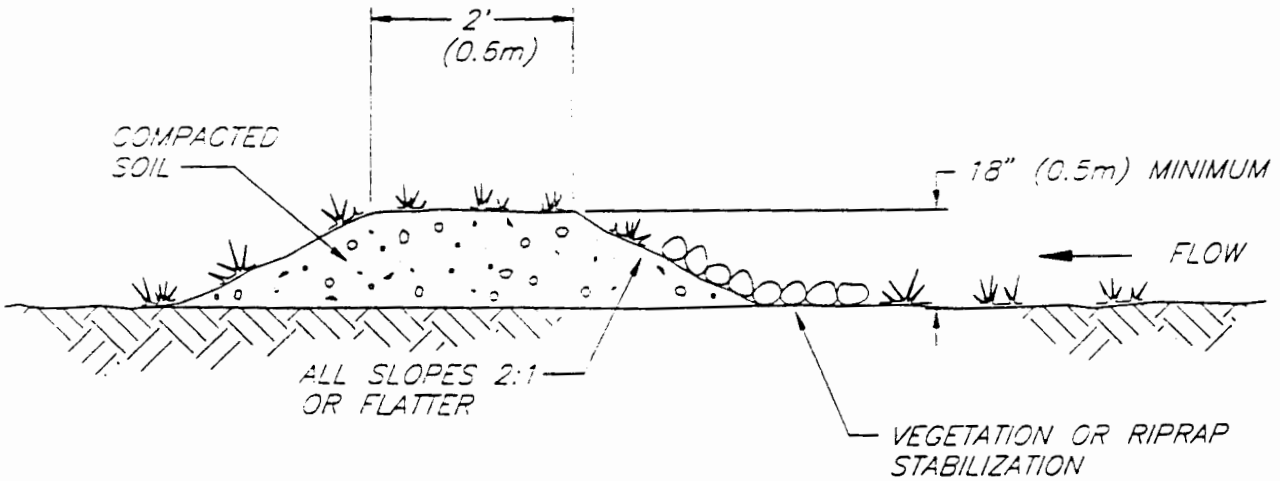

TYPICAL TEMPORARY DIVERSION DIKE

NOTES:
1. THE CHANNEL BEHIND THE BERM SHALL HAVE POSITIVE GRADE TO A STABILIZED OUTLET.
2. THE BERM SHALL BE ADEQUATELY COMPACTED TO PREVENT FAILURE.
3. THE BERM SHALL BE STABLILIZED WITH TEMPORARY OR PERMANENT SEEDING OR RIPRAP.

CHECK DAM

GENERAL DESCRIPTION:

A check dams is a small dam constructed across a drainage channel. Its purpose is to control runoff, channel erosion, and sediment transport by reducing runoff velocity, providing stabilized drops, and by trapping sediment. These controls are most commonly used in steeply sloped channels or swales, or in areas where adequate vegetation cannot be established. Check dams are usually built from stone, straw bales, or sand bags, and may be either a temporary or permanent structural control.

PROS:

- Reduces runoff velocity and erosion within channels
- Significantly reduces the sediment volume in the runoff
- Inexpensive and easy to install
- Useful where it is not possible to divert the flow to stabilize the channel
- If designed properly, may be used as a permanent structure

CONS:

- Useful only if the drainage area is less than 5 acres
- Significant sedimentation may destroy vegetation lining the channel
- May not be used in a drainage that is a perennial stream

INSTALLATION GUIDELINES:

- Maximum height of the dam, at center, shall be 2 feet.
- The center of the dam shall be a minimum of 6 inches lower than the outer edges.
- Maximum spacing between check dams shall provide that the toe of the upstream dam is at the same elevation as the top of the downstream dam.
- Construct an energy dissipator on the downstream side of the dam to reduce downstream erosion.

Rock Check Dam

- Rock check dams shall be constructed of 2-15 inch maximum size aggregate rock.
- The center of the dam (spillway) shall be at least 6 inches lower than the outer edges.
- If applicable, extend abutments 18 inches into the channel bank.

Straw Bale Check Dam

- Place straw bales lengthwise, in a single row, perpendicular to the flow. Tightly abut the ends of adjacent bales.
- To ensure that sediment-laden runoff flows over the barrier, the bottoms of the bales on the outer edges of the dam shall be higher in elevation than the top of the middle bale (spillway).
- Straw bales shall be embedded in a trench that has been excavated to a minimum depth of 4 inches.
- Gaps between the bales should be filled with straw, rocks, or filter fabric, and backfill material shall be tamped to prevent erosional displacement.
- If wire bound, straw bales shall be oriented so the bindings are around the sides rather than along the top and bottom.
- Bales shall be anchored in place by two 2x2 inch wooden stakes or by rebar driven through the bales. The anchors shall be driven at least 18 inches into the ground and the first anchor driven into each bale shall be driven toward the previously laid bale to force the bales tightly together.

INSPECTION AND MAINTENANCE:

- For active field operations, check dams shall be inspected weekly and following each storm event producing greater than 0.5 inches of precipitation.
- When site activity has ceased and significant surface runoff is not likely (arid season), inspections shall be conducted at least every other month and following each storm event producing greater than 0.5 inches of precipitation.
- If an additional inspection frequency is specified within a Storm Water Pollution Prevention (SWPP) Plan, this frequency shall be followed.
- Inspections shall be documented on the BMP Inspection and Maintenance Form.
- Inspectors should identify in particular:
    - Correct installation.
    - Effectiveness in controlling storm water runoff and erosion.
    - Damage that has occurred since the last inspection. *Most notably*: erosion caused by flows around or under the dam structure.
    - Required maintenance.
    - Sediment accumulations and the need to remove the accumulations.
    - Evidence of erosion or other damage in the surrounding area.
- Inspect the dam for collapse or undermining.
- Remove accumulated sediment when it has reached one half the original dam height.
- Removed sediment accumulations shall not be placed within any drainage, either above or below the BMP.
- Removed sediment shall be stabilized to prevent future migration from storm water runoff.
- Conduct required repairs immediately and document them in the current or next inspection record.

Environmental media (e.g. soil, sediment, surface and ground water) is not considered waste. However, contaminated environmental media may constitute solid waste and/or hazardous waste. If there is any potential for accumulated sediment to be contaminated, a waste determination must be made and documented. For guidance, see the Laboratory's LIRs on Radioactive Waste, Managing Solid Waste, and Hazardous and Mixed Waste Requirements for Generators.

Inspection plans and records shall be maintained by the owner/operator, and made available for future regulatory inspections.

REMOVAL CRITERIA:

- Check dams shall not be removed until the channel has been stabilized with permanent structural controls.
- If a rock check dam is used, all stone should be removed if vegetative erosion controls will be used as permanent stabilization.

For assistance with BMP selection, installation, or maintenance, please contact ESH-18 at 665-4752.

ROCK CHECK DAM

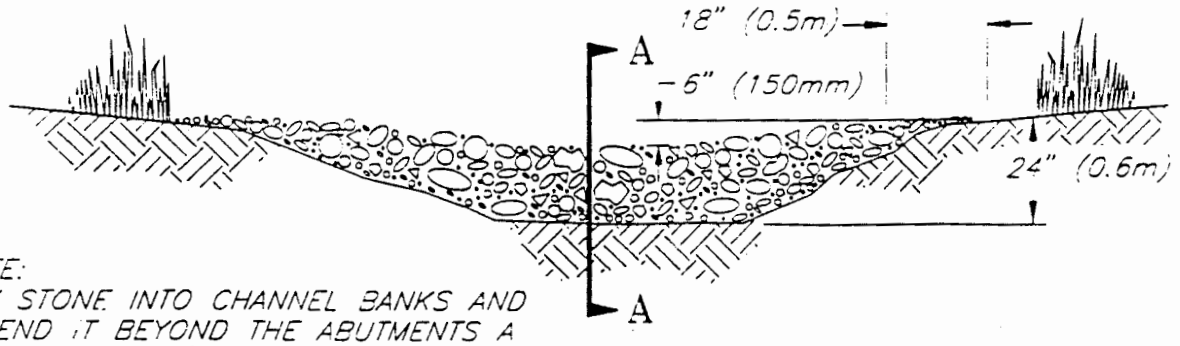

NOTE:
KEY STONE INTO CHANNEL BANKS AND EXTEND IT BEYOND THE ABUTMENTS A MINIMUM OF 18" (0.5m) TO PREVENT FLOW AROUND DAM.

VIEW LOOKING UPSTREAM

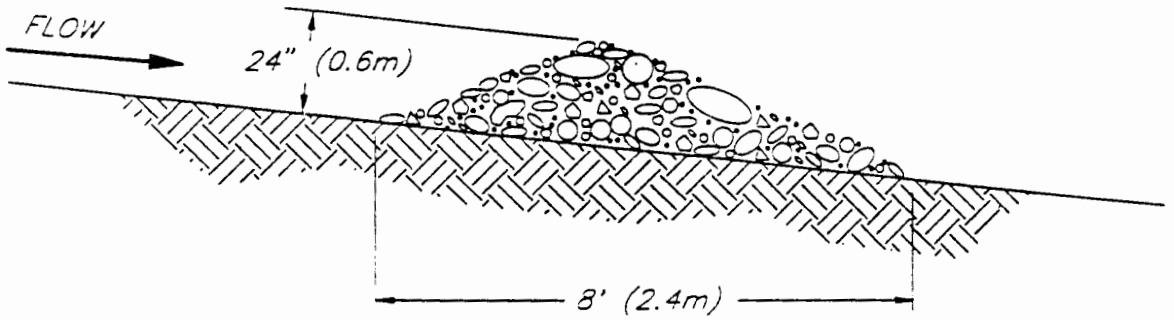

SECTION A – A

'L' = THE DISTANCE SUCH THAT POINTS 'A' AND 'B' ARE OF EQUAL ELEVATION.

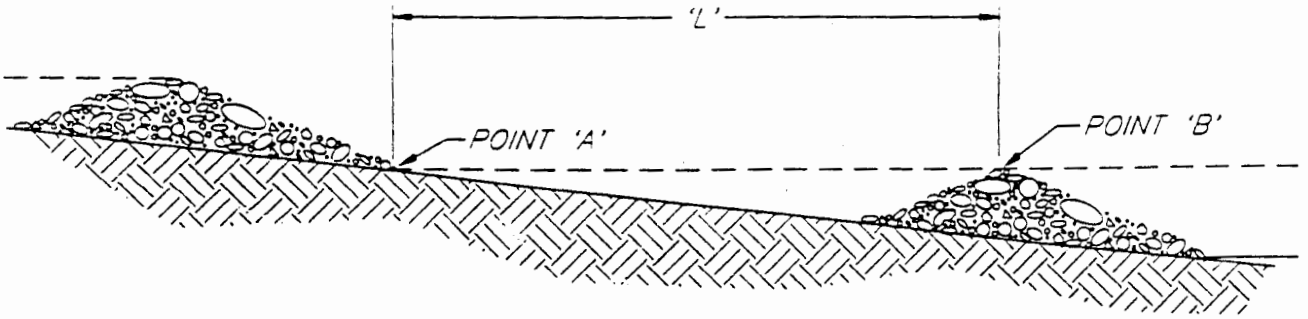

SPACING BETWEEN CHECK DAMS

NOT TO SCALE

STRAW BALE CHECK DAM

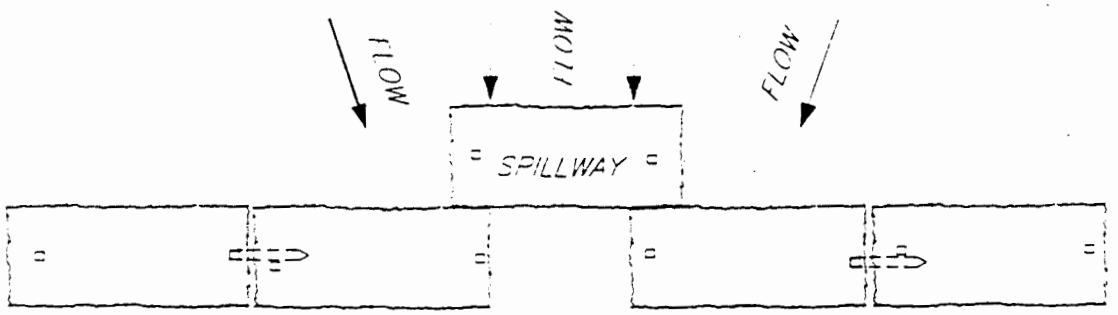

PLAN

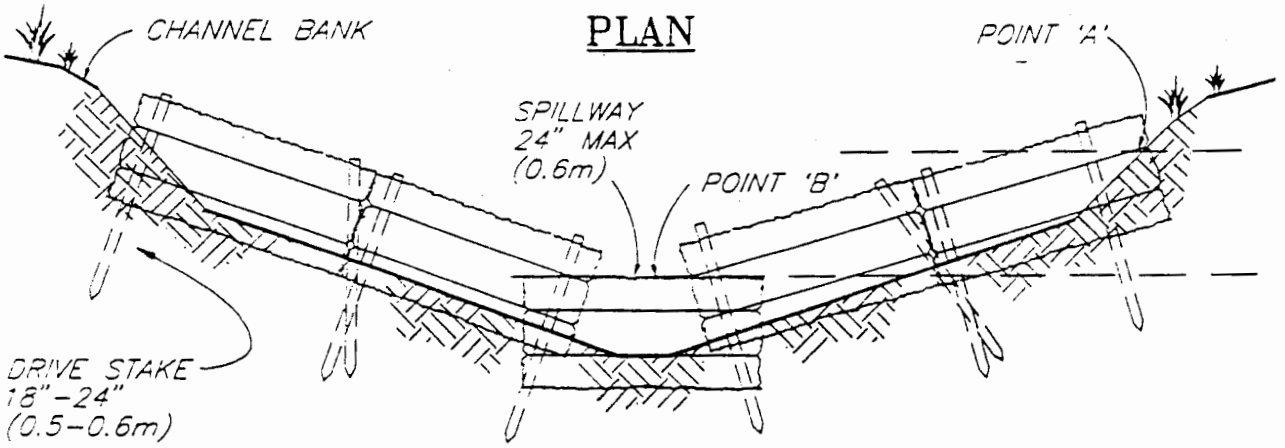

VIEW LOOKING UPSTREAM

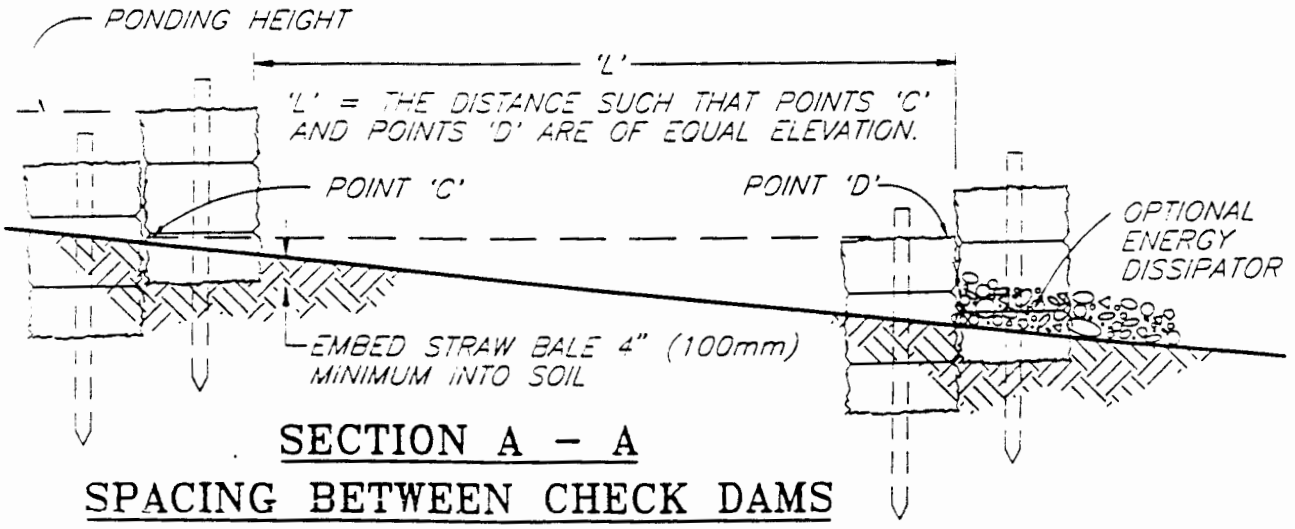

SECTION A - A

SPACING BETWEEN CHECK DAMS

NOTES:

1. EMBED BALES 4" (100mm) INTO THE SOIL AND 'KEY' BALES INTO THE CHANNEL BANKS.
2. POINT 'A' MUST BE HIGHER THAN POINT 'B'. (SPILLWAY HEIGHT)
3. PLACE BALES PERPENDICULAR TO THE FLOW WITH ENDS TIGHTLY ABUTTING.
4. SPILLWAY HEIGHT SHALL NOT EXCEED 24" (0.6m).
5. INSPECT AFTER EACH SIGNIFICANT STORM, MAINTAIN AND REPAIR PROMPTLY.

NOT TO SCALE

WATERBAR

GENERAL DESCRIPTION:

A waterbar consists of a berm and excavation that is constructed diagonally across a sloping dirt or gravel road, or utility right-of-way. The purpose of a waterbar is to control erosion on roadways by reducing runoff velocity and by limiting the volume of accumulated water through diversion. At predesigned intervals, runoff is diverted off the roadway onto designated outlet areas.

PROS:

- Reduces runoff and erosion on sloping roadways
- Easy to install
- Requires minimal maintenance
- Easy to inspect

CONS:

- Become less effective when subject to vehicle traffic during wet weather
- May be difficult to cross with low clearance vehicles
- Consideration must be given to each individual outlet area
- Structures should not outlet onto unprotected slopes

INSTALLATION GUIDELINES:

- Waterbars should be constructed immediately upon completion of roadway or right-of-way clearing and grading.
- As measured from the bottom of the excavation to the top of the berm, waterbar height should be a minimum of 18 inches.
- Side slopes should be 2:1 or flatter, and 3:1 or flatter where vehicles cross.
- The diversion shall be constructed at an angle of 45 to 60 degrees from the centerline.
- Diversion should have a minimum positive grade of 2%.
- For areas of significant vehicular traffic, waterbars should be stabilized with gravel.
- Diversions shall outlet onto areas stabilized by either natural or constructed means.
- To approximate the appropriate spacing distance between waterbars, determine the distance it takes for the unrocked, unprotected running surface of a nearby road to develop a 1 inch rill.

INSPECTION AND MAINTENANCE:

- For active field operations, waterbars shall be inspected weekly and following each storm event producing greater than 0.5 inches of precipitation.
- When site activity has ceased and significant surface runoff is not likely (arid season), inspections shall be conducted at least every other month and following each storm event producing greater than 0.5 inches of precipitation.
- If an additional inspection frequency is specified within a Storm Water Pollution Prevention (SWPP) Plan, this frequency shall be followed.
- Inspections shall be documented on the BMP Inspection and Maintenance Form.
- Inspectors should identify in particular:
    - Correct installation.
    - Effectiveness in controlling storm water runoff and erosion.
    - Damage that has occurred since the last inspection.
    - Required maintenance.

    - Sediment accumula s and the need to remove the accumulatic
    - Evidence of erosion or other damage in the surrounding area.
- Inspect the diversion outlet area for erosion or other damage.
- Inspect the berm and excavation area for damage.
- Conduct required repairs immediately and document them in the current or next inspection record.

Environmental media (e.g. soil, sediment, surface and ground water) is not considered waste. However, contaminated environmental media may constitute solid waste and/or hazardous waste. If there is any potential for accumulated sediment to be contaminated, a waste determination must be made and documented. For guidance, see the Laboratory's LIRs on Radioactive Waste, Managing Solid Waste, and Hazardous and Mixed Waste Requirements for Generators.

Inspection plans and records shall be maintained by the owner/operator, and made available for future regulatory inspections.

REMOVAL CRITERIA:

- Waterbars shall not be removed until the slope has been stabilized with permanent structural controls.

For assistance with BMP selection, installation, or maintenance, please contact ESH-18 at 665-4752.

WATERBAR

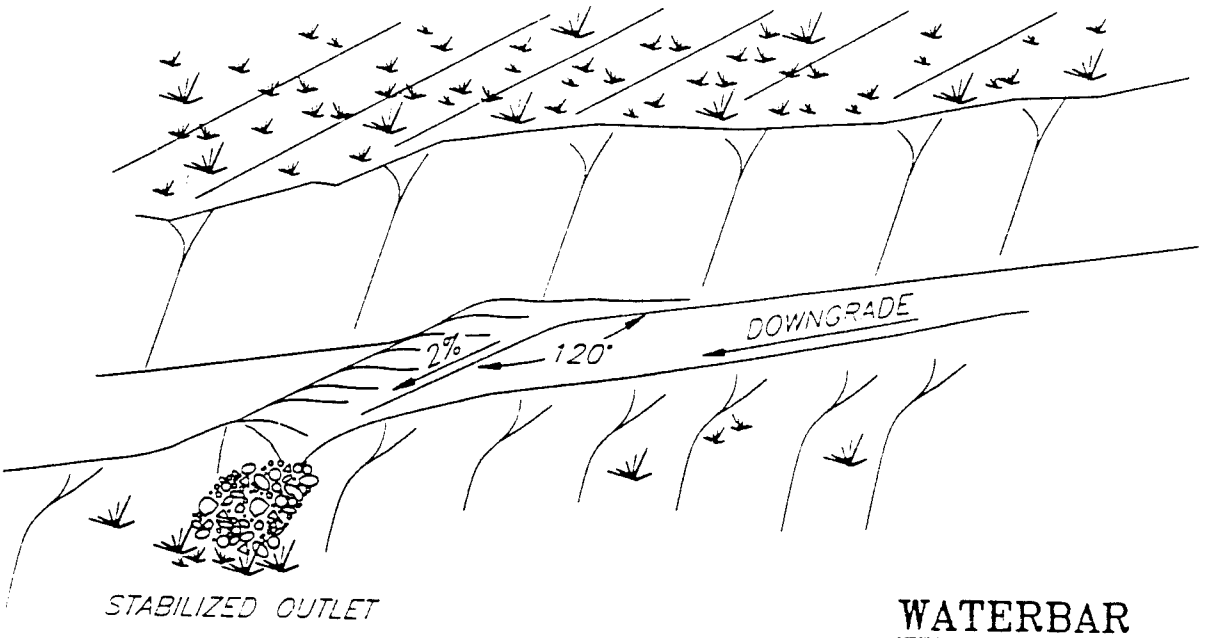

WATERBAR

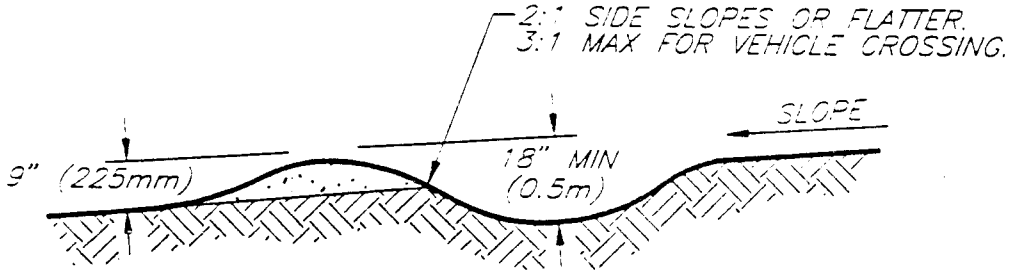

SECTION

SURFACE ROUGHENING

GENERAL DESCRIPTION:

Surface roughening involves creating, in a bare soil surface, horizontal grooves, depressions, or steps that run parallel to the contour of the land. Roughening methods include grooving or furrowing, stair step grading, and tracking with heavy equipment. These temporary features control erosion by reducing runoff velocity, increasing infiltration, trapping sediment, and aiding in the establishment of vegetative cover, and may be used on all slopes. For steeper slopes, surface roughening should be used in combination with vegetative practices.

PROS:

- Provides immediate erosion protection while vegetative cover is being established
- Easy to construct
- Inexpensive
- Requires minimal maintenance
- Easy to inspect

CONS:

- Limited effectiveness during large storm events
- Temporary control which may have to be reestablished due to storm damage
- Difficult to establish on smooth, hard surfaces

INSTALLATION GUIDELINES:

Cut Slope Roughening

- For slopes steeper than 3:1 but less than 2:1, use stair-step grading or groove cuts.
- For slopes steeper than 2:1, use stair-step grading.
- Use stair-step grading on soils containing large amounts of small rock or any erodible material soft enough to be ripped with a bulldozer.
- Construct stairs wide enough to work with standard earth moving equipment.
- Vertical cuts shall be no more than 2 feet deep in soft materials or no more than 3 feet deep in rocky materials.
- When constructing groove cuts, create a series of ridges and depressions that run across the slope, parallel to the contour.
- Grooves may be constructed using any implement that can be safely operated on the slope.
- Seed roughened areas as quickly as possible.

Fill Slope Roughening

- Slopes with a gradient steeper than 3:1 should be placed in lifts not to exceed 8 inches. Ensure that each lift is properly compacted.
- Slopes with a gradient steeper than 2:1 should be stair-stepped.
- The face of the slope should consists of loose, uncompacted fill 4-6 inches deep.
- Groove the slope in the same manner described in Cut Slope Roughening.
- Seed roughened areas as quickly as possible.
- Do not blade or scrape the final slope face.

Roughening With Tracked Machinery

- Use of tracked machinery should be limited to sandy soils that do not compact easily.
- Avoid tracking on clay soils.
- Operate tracked machinery perpendicular to the contours to leave horizontal depressions in the soil.
- Seed roughened areas as quickly as possible.

INSPECTION AND MAINTENANCE:

- For active field operations, surface roughening shall be inspected weekly and following each storm event producing greater than 0.5 inches of precipitation.
- When site activity has ceased and significant surface runoff is not likely (arid season), inspections shall be conducted at least every other month and following each storm event producing greater than 0.5 inches of precipitation.
- If an additional inspection frequency is specified within a Storm Water Pollution Prevention (SWPP) Plan, this frequency shall be followed.
- Inspections shall be documented on the BMP Inspection and Maintenance Form.
- Inspectors should identify in particular:
    - Correct installation.
    - Effectiveness in controlling storm water runoff, erosion, and sediment transport.
    - Damage that has occurred since the last inspection. *Most notably*: rills, washes, and damage to vegetation.
    - Required maintenance.
    - Sediment accumulations and the need to remove the accumulations.
    - Evidence of erosion or other damage in the surrounding area.
- Reseed and conduct required repairs immediately and document the actions in the current or next inspection record.

Environmental media (e.g. soil, sediment, surface and ground water) is not considered waste. However, contaminated environmental media may constitute solid waste and/or hazardous waste. If there is any potential for accumulated sediment to be contaminated, a waste determination must be made and documented. For guidance, see the Laboratory's LIRs on Radioactive Waste, Managing Solid Waste, and Hazardous and Mixed Waste Requirements for Generators.

Inspection plans and records shall be maintained by the owner/operator, and made available for future regulatory inspections.

REMOVAL CRITERIA:

- Inspection and maintenance of surface roughening shall not cease until the slope has been permanently stabilized with structural controls or vegetation.
- Final vegetative stabilization is defined as 70% of the vegetative cover that would exist under normal site conditions. This determination shall be made by the Water Quality & Hydrology Group (ESH-18).

For assistance with BMP selection, installation, or maintenance, please contact ESH-18 at 665-4752.

SURFACE ROUGHENING

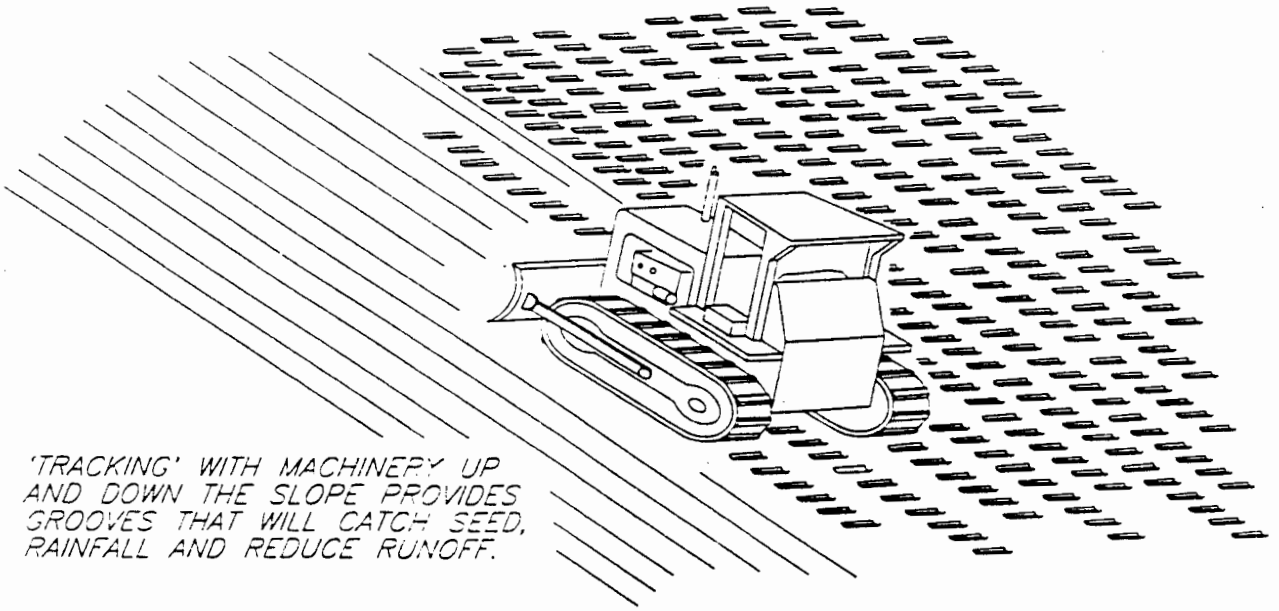

TRACKING

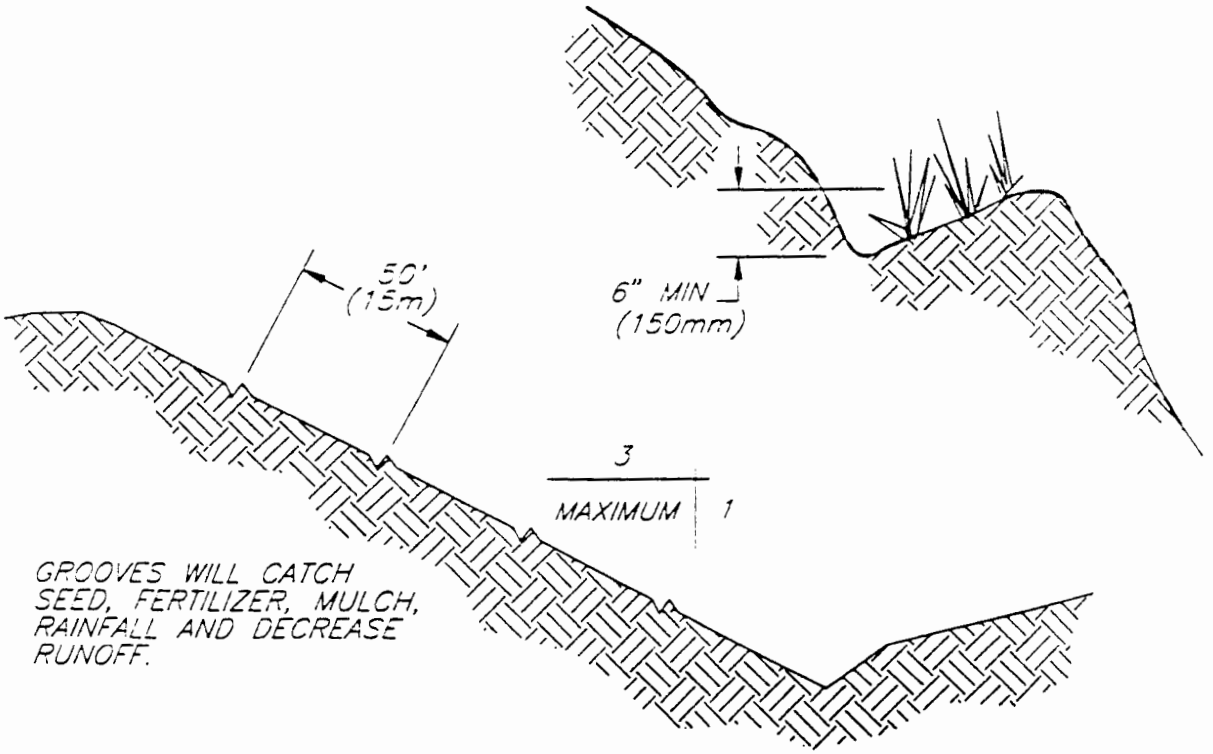

CONTOUR FURROWS

STEPPED OR TERRACED SLOPE

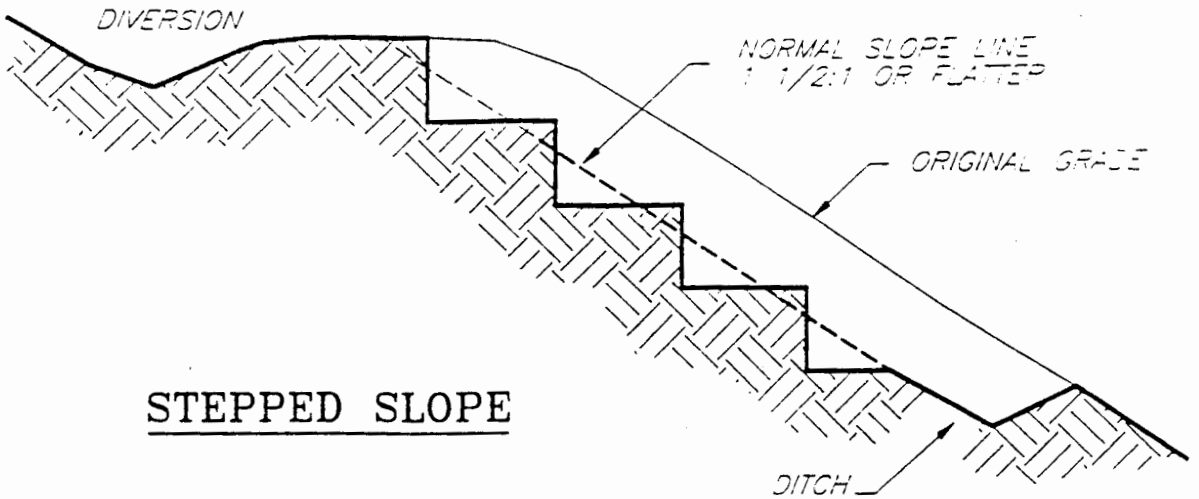

STEPPED SLOPE

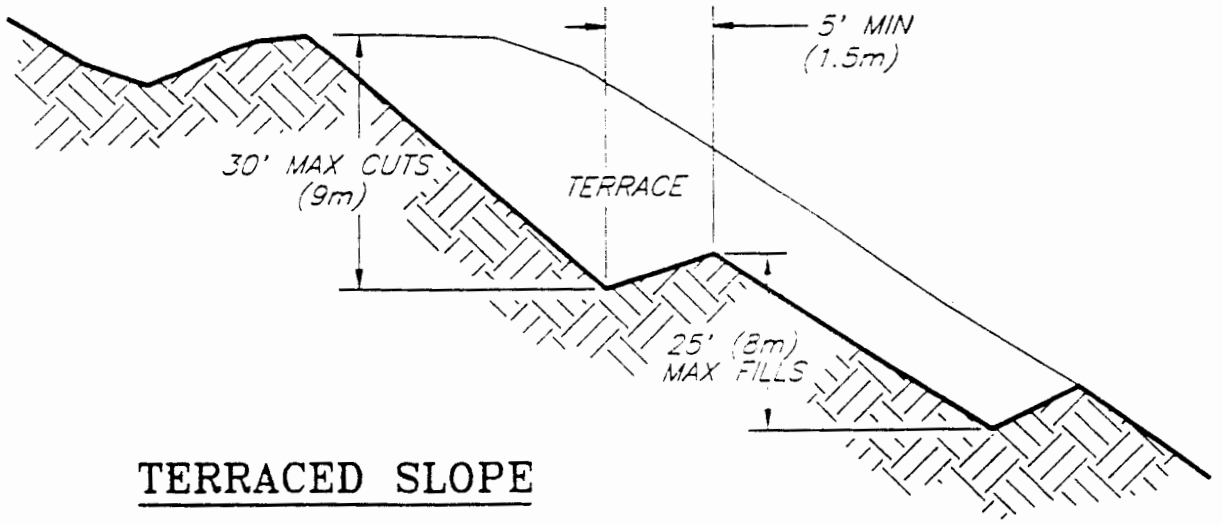

TERRACED SLOPE

NOT TO SCALE

NOTES:
1. VERTICAL CUT DISTANCE SHALL BE LESS THAN HORIZONTAL DISTANCE.
2. VERTICAL CUT SHALL NOT EXCEED 2 FT. (0.6m) IN SOFT MATERIAL AND 3 FT. (0.9m) IN ROCKY MATERIAL.

PIPE SLOPE DRAIN

GENERAL DESCRIPTION:

Pipe slope drains are designed to carry concentrated runoff down a slope without causing erosion. They are used most often on cut or fill slopes, areas already damaged by erosion or at high risk for erosion, areas in the process of permanent stabilization, or on saturated slopes at risk for soil slides. This BMP may be constructed with flexible or rigid pipe, sectional downdrains, paved chutes, or clay tiles and may be placed either above or beneath the ground surface.

PROS:

- Reduce or eliminate erosion on steep slopes or in saturated soils
- Especially effective before a slope has been stabilized or before permanent drainage structures are ready for use
- Easy to install
- Requires little maintenance
- Easy to inspect

CONS:

- Requires the area disturbed by installation to be stabilized
- Conduit may clog during a large storm
- Overtopping may occur if pipe inlet capacity is inadequate
- BMP must be sized, installed, and maintained properly or severe erosion of the slope may occur
- Requires formal design

INSTALLATION GUIDELINES:

- Maximum recommended drainage area for a single slope drain is approximately 10 acres.
- Pipe should be sized using the peak runoff from a 10-year storm.
- Place conduit material on undisturbed soil or well-compacted fill. Placement should conform to the locations and elevations shown on the design drawings.
- At intervals not to exceed 10 feet, anchor the conduit with reinforced, hold-down grommets or stakes. For CMP or corrugated plastic, install one anchor for every 20 feet of conduit.
- The pipe slope drain entrance shall be constructed with a standard flared-inlet section of pipe. Ensure that inlet capacity is adequate for the design flow.
- To prevent failure of the slope drain from water saturating the soil and seeping along the pipe, backfill around and under the pipe with stable soil material, hand compacting in 6 inch lifts.
- Fill material over the slope drain, at the top of the slope, shall have a minimum depth of 1.5 feet and a minimum top width of 4 feet. Corresponding side slopes should have a 3:1 slope.
- Ensure that all conduit fittings are watertight.
- Extend conduit beyond the toe of the slope.
- Stabilize the soil at the outlet with riprap or another type of energy dissipator.
- Stabilize all areas disturbed by installation.

INSPECTION AND MAINTENANCE:

- For active field operations, pipe slope drains shall be inspected weekly and following each storm event producing greater than 0.5 inches of precipitation.

- When site activity has ceased and significant surface runoff is not likely (arid season), inspections shall be conducted at least every other month and following each storm event producing greater than 0.5 inches of precipitation.
- If an additional inspection frequency is specified within a Storm Water Pollution Prevention (SWPP) Plan, this frequency shall be followed.
- Inspections shall be documented on the BMP Inspection and Maintenance Form.
- Inspectors should identify in particular:
    - Correct installation
    - Effectiveness in controlling storm water runoff.
    - Damage that has occurred since the last inspection.
      Most notably: storm water flowing around the conduit entrance, and/or undermining the structure.
    - Required maintenance
    - Sediment accumulations and the need to remove the accumulations.
    - Evidence of erosion or other damage in the surrounding area.
- Accumulated sediment shall be removed when impedes proper conveyance.
- Inspect the outlet point for erosion or other damage.
- Inspect the conduit for breaks or clogs.
- Conducted required repairs immediately and document them in the current or next inspection record.

Environmental media (e.g. soil, sediment, surface and ground water) is not considered waste. However, contaminated environmental media may constitute solid waste and/or hazardous waste. If there is any potential for accumulated sediment to be contaminated, a waste determination must be made and documented. For guidance, see the Laboratory's LIRs on Radioactive Waste, Managing Solid Waste, and Hazardous and Mixed Waste Requirements for Generators.

Inspection plans and records shall be maintained by the owner/operator, and made available for future regulatory inspections.

REMOVAL CRITERIA:

- Pipe slope drains shall not be removed until the slope has been permanently stabilized with structural controls or vegetation, or permanent drainage structures are ready for use.
- Final vegetative stabilization is defined as 70% of the vegetative cover that would exist under normal site conditions. This determination shall be made by the Water Quality & Hydrology Group (ESH-18).

For assistance with BMP selection, installation, or maintenance, please contact ESH-18 at 665-4752.

PIPE SLOPE DRAIN

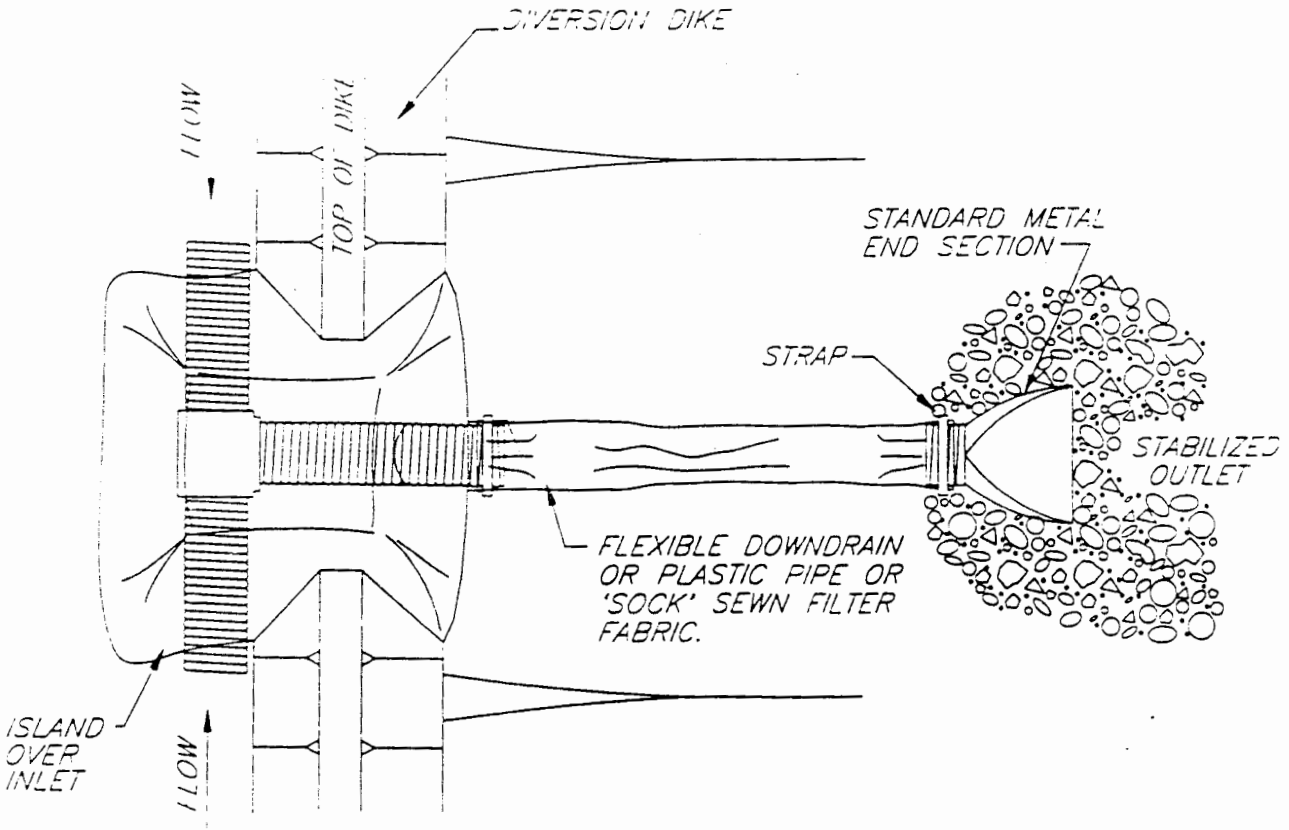

PLAN VIEW

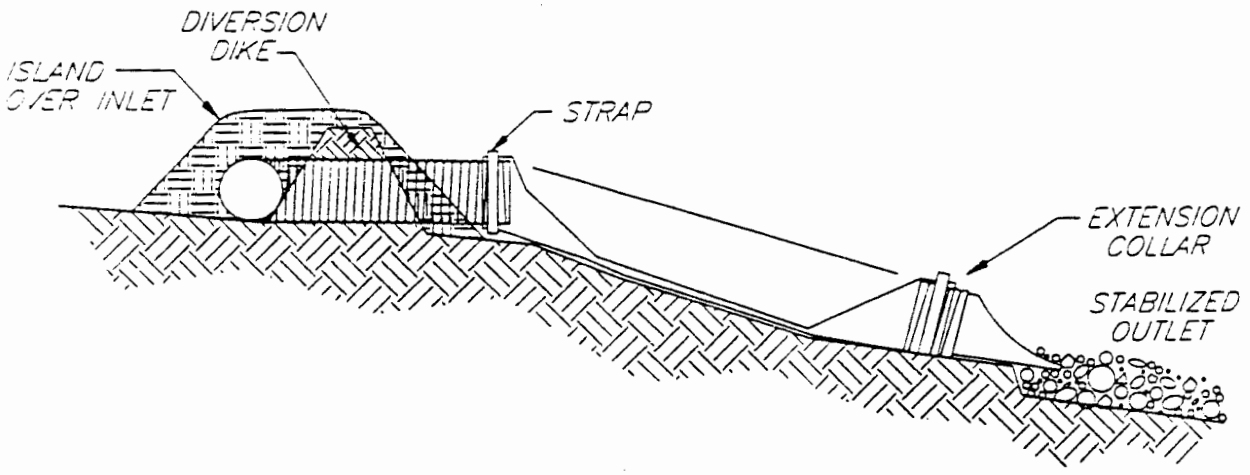

SECTION

LEVEL SPREADER

GENERAL DESCRIPTION:

A level spreader is an outlet for dikes and diversions consisting of an excavated depression constructed at zero grade across a slope. The level spreader converts concentrated runoff to sheet flow and releases it onto areas stabilized by existing vegetation. Level spreaders are typically placed at the end of dikes that carry sediment free storm runoff away from graded areas and outlet onto undisturbed areas.

PROS:

- Reduces runoff velocity and increases infiltration rates
- Minimal cost to construct
- Easy to inspect

CONS:

- To ensure proper operation, installation requires strict adherence to the design
- Requires regular maintenance and inspection
- Not suitable for large volumes of water
- Should be used on gentle slopes to prevent erosion from spreader discharge
- Can easily develop "short circuiting" because of erosion or other disturbance

INSTALLATION GUIDELINES:

- Level spreaders must be constructed on undisturbed soil (not fill material).
- The slope on the sides of the spreader should be 2:1 or less.
- Excavate the spreader to minimum depth of 6 inches.
- The entrance to the spreader should be level so that the flow can spread out evenly.
- The grade through the spreader channel should be 0%.
- Prior to operation, the depression shall be vegetated. (See the sections on temporary and permanent seeding, pages 58 and 60.)
- The level lip should be of uniform height and zero grade over the length of the spreader.
- Runoff with high sediment loads should be routed through a sediment retention device prior to entrance into the level spreader.
- Stabilize all areas disturbed by spreader installation.

INSPECTION AND MAINTENANCE:

- For active field operations, level spreaders shall be inspected weekly and following each storm event producing greater than 0.5 inches of precipitation.
- When site activity has ceased and significant surface runoff is not likely (arid season), inspections shall be conducted at least every other month and following each storm event producing greater than 0.5 inches of precipitation.
- If an additional inspection frequency is specified within a Storm Water Pollution Prevention (SWPP) Plan, this frequency shall be followed.
- Inspections shall be documented on the BMP Inspection and Maintenance Form.
- Inspectors should identify in particular:
    - Correct installation
    - Effectiveness in controlling storm water runoff and erosion.
    - Damage that has occurred since the last inspection. *Most notably*: absence of uniform flow at the spreader outlet and erosion on the slope below the spreader.

- Required maintenan
- Sediment accumulations and the need to remove the accumulations.
- Evidence of erosion or other damage in the surrounding area.

- Inspect the outlet point for erosion or other damage.
- Inspect the spreader depression for adequate and uniform vegetation.
- Removed sediment accumulations shall not be placed within any drainage, either above or below the BMP.
- Removed sediment shall be stabilized to prevent future migration from storm water runoff.
- Conducted required repairs immediately and document them in the current or next inspection record.

Environmental media (e.g. soil, sediment, surface and ground water) is not considered waste. However, contaminated environmental media may constitute solid waste and/or hazardous waste. If there is any potential for accumulated sediment to be contaminated, a waste determination must be made and documented. For guidance, see the Laboratory's LIRs on Radioactive Waste, Managing Solid Waste, and Hazardous and Mixed Waste Requirements for Generators.

Inspection plans and records shall be maintained by the owner/operator, and made available for future regulatory inspections.

REMOVAL CRITERIA:

- Level spreaders shall not be removed unless the storm water outlet is no longer in use, or until the area being protected by the berm or storm water conveyance has been permanently stabilized with structural controls or vegetation.
- Final vegetative stabilization is defined as 70% of the vegetative cover that would exist under normal site conditions. This determination shall be made by the Water Quality & Hydrology Group (ESH-18).

For assistance with BMP selection, installation, or maintenance, please contact ESH-18 at 665-4752.

LEVEL SPREADERS

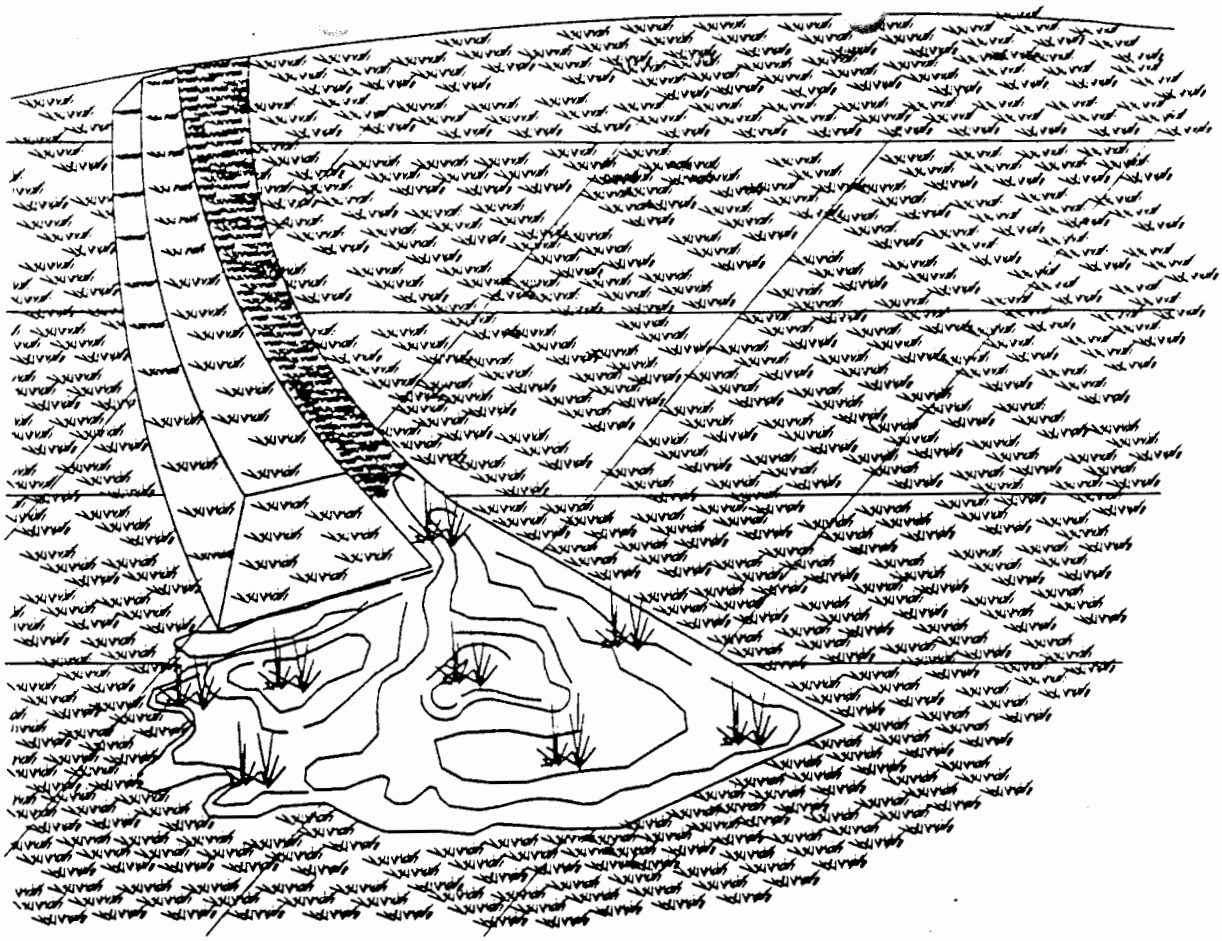

PROFILE

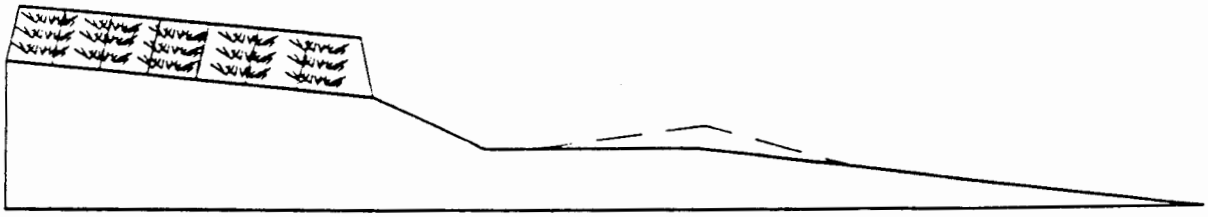

TYPICAL SECTION

CHANNELS

GENERAL DESCRIPTION:

Channels are defined as natural or constructed waterways designed to collect and convey concentrated flows of storm water runoff. In conveying concentrated flows, channels both minimize erosion and keep runoff from coming in contact with potential pollutants. Channels are typically v-shaped, parabolic, or trapezoidal in shape, and may be lined with vegetation, rock, asphalt, or concrete. A small parabolic or v-shaped channel may also be referred to as a swale. Swales are most commonly used in conjunction with berms.

PROS:

- Ability to direct flows away from construction or industrial activities
- Requires little maintenance
- Provides a long-term storm water control

CONS:

- Cost may not be economical for small facilities or sites
- May increase flow rates
- Conveyed concentrated flows require stabilized structures all the way to the discharge point
- Requires formal design

INSTALLATION GUIDELINES:

- Channel excavation shall conform to the locations and elevations shown on the design drawings.
- Channel material should be place as the foundation is prepared.
- When constructing rock lined channels, rock shall be placed to form a uniform mass with few voids.
- When constructing vegetation lined channels, use matting (see section on matting, page 54) to establish the lining.
- Channel material shall be based upon flow volumes, channel slope, and soil conditions.
- V-shaped channels should be constructed when flow volumes are relatively small.
- Trapezoidal or parabolic channels should be constructed for large volume flows.
- Channel outlets shall be stabilized with an energy dissipator, and where applicable, sediment trapping controls.
- Stabilize all areas disturbed by channel construction.

INSPECTION AND MAINTENANCE:

- For active field operations, channels shall be inspected weekly and following each storm event producing greater than 0.5 inches of precipitation.
- When site activity has ceased and significant surface runoff is not likely (arid season), inspections shall be conducted at least every other month and following each storm event producing greater than 0.5 inches of precipitation.
- If an additional inspection frequency is specified within a Storm Water Pollution Prevention (SWPP) Plan, this frequency shall be followed.
- Inspections shall be documented on the BMP Inspection and Maintenance Form.
- Inspectors should identify in particular:
    - Correct installation
    - Effectiveness in controlling storm water runoff.
    - Damage that has occurred since the last inspection. *Most notably*: scour, vegetation loss, erosion, and rock displacement.

- Required maintenai
- Sediment accumulations and the need to remove the accumulations.
- Evidence of erosion or other damage in the surrounding area.

- Inspect the outlet point for erosion or other damage.
- Inspect the channel for scour, bank stability, and debris build-up.
- Remove debris and sediment accumulations as necessary.
- Removed sediment accumulations shall not be placed within any drainage, either above or below the BMP.
- Removed sediment shall be stabilized to prevent future migration from storm water runoff.
- Conduct required repairs immediately and document them in the current or next inspection record.

Environmental media (e.g. soil, sediment, surface and ground water) is not considered waste. However, contaminated environmental media may constitute solid waste and/or hazardous waste. If there is any potential for accumulated sediment to be contaminated, a waste determination must be made and documented. For guidance, see the Laboratory's LIRs on Radioactive Waste, Managing Solid Waste, and Hazardous and Mixed Waste Requirements for Generators.

Inspection plans and records shall be maintained by the owner/operator, and made available for future regulatory inspections.

REMOVAL CRITERIA:

- If functioning as a temporary control, channels shall not be removed until the area of concern has been permanently stabilized with structural controls or vegetation.
- Final vegetative stabilization is defined as 70% of the vegetative cover that would exist under normal site conditions. This determination shall be made by the Water Quality & Hydrology Group (ESH-18).

For assistance with BMP selection, installation, or maintenance, please contact ESH-18 at 665-4752.

ROCK LINED CHANNEL

DESIGN HEIGHT (H), WIDTH AND STONE SIZE SHALL BE DETERMINED BY THE ENGINEER

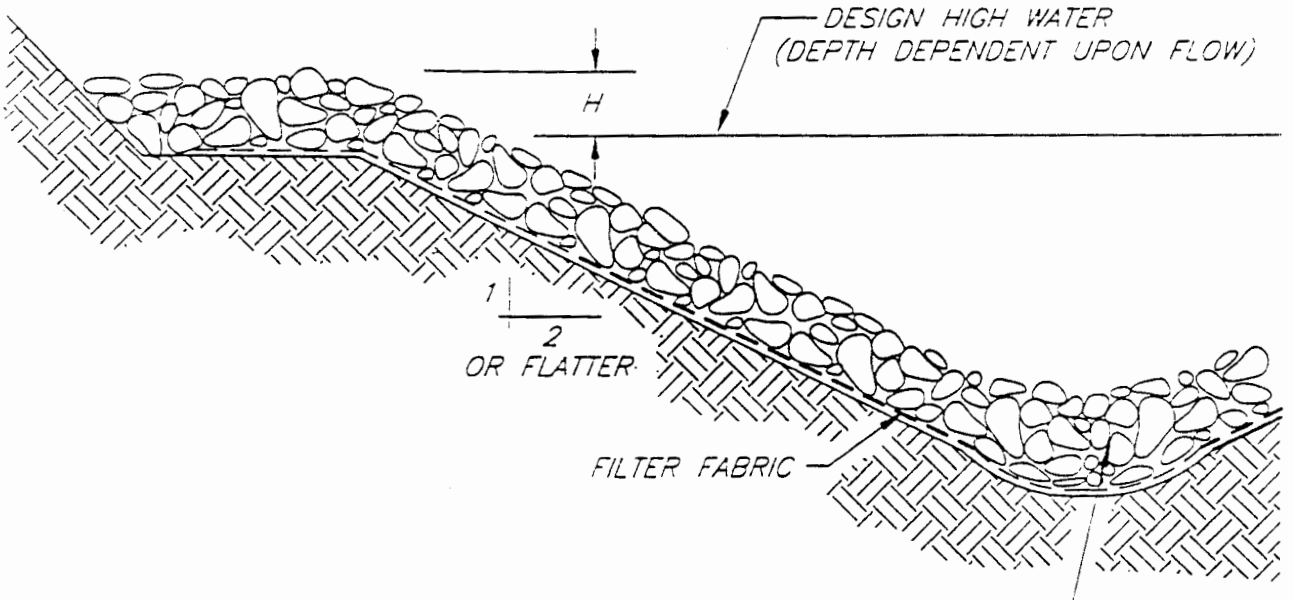

MINIMUM 6" (150mm) THICK LAYER OF 2" (50mm) MINIMUM DIAMETER DRAIN ROCK. LARGER STONE SHALL BE USED DEPENDENT UPON GRADIENT, SOIL TYPE, AND DESIGN FLOW.

TYPICAL SECTION

GRASS-LINED CHANNEL
TYPICAL CROSS SECTIONS

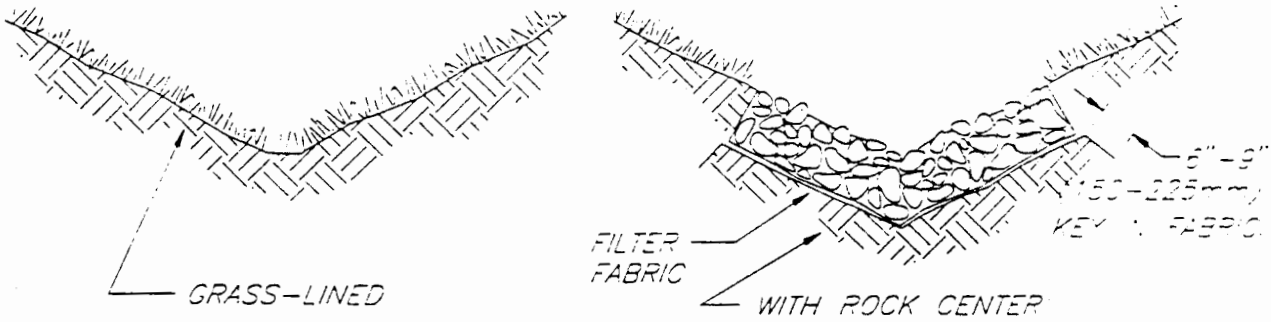

TYPICAL V-SHAPED CHANNEL CROSS-SECTION

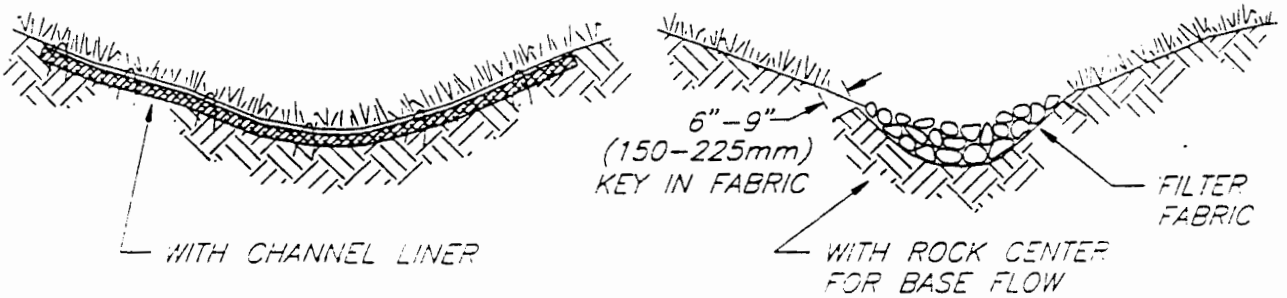

TYPICAL PARABOLIC CHANNEL CROSS-SECTION

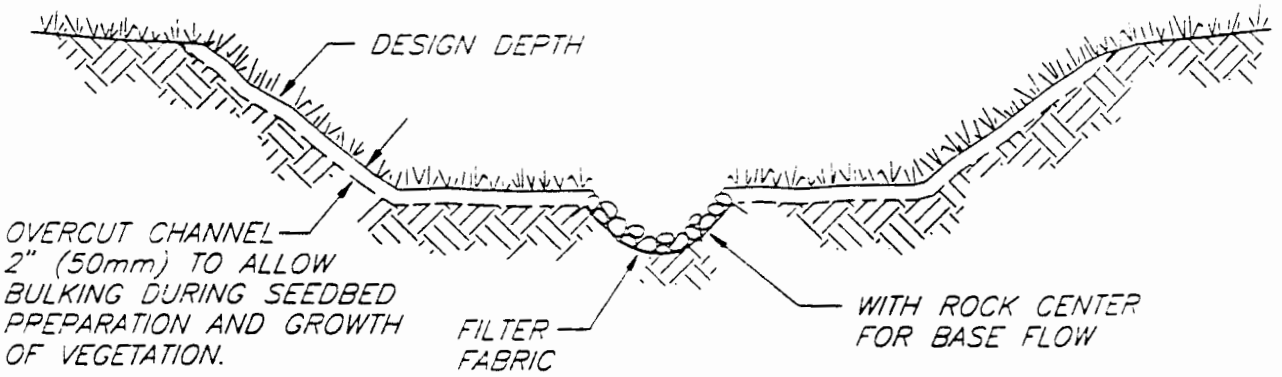

CROSS-SECTION

VEGETATIVE BUFFER ZC

GENERAL DESCRIPTION:

Vegetative buffer zones are vegetated sections of land used to manage storm water runoff. Buffer zones increase infiltration rates and reduce runoff velocity, sediment transport, and runoff on slopes. These areas are particularly effective at the top or bottom of slopes, or adjacent to disturbed or paved areas, wetlands, and watercourses. Buffer zones may be either vegetated areas left undisturbed during construction or newly planted areas.

PROS:

- Inexpensive when using existing vegetation
- Once established, requires minimal maintenance
- Aesthetic control
- Can be used at any site that supports vegetation
- Increases infiltration rate, filters sediment, and reduces runoff velocity

CONS:

- Requires areas that won't limit site activity or the movement of equipment
- Buffer zone is ineffective until vegetation is established
- Area will require additional controls while vegetation is being established

INSTALLATION GUIDELINES:

Existing Vegetation

- Existing vegetation shall be protected such as excavation and damage from equipment or vehicle traffic.
- Maintain or improve the quality of existing vegetation through routine maintenance activity.
- As applicable, maintenance activities should include irrigating, mowing, pruning, fertilizing, and weed and pest control.

Establishing Vegetation

- Native vegetation appropriate to the season and site conditions shall be used.
- See Section 222.7 of the LANL Architectural Standards Manual, Volume 4, for guidance on applicable seed mixes.
- Storm water diversion and conveyance controls shall be installed to divert concentrated flows away from seeded areas.
- Ensure that seeded areas are protected against disturbances until vegetation is established.

INSPECTION AND MAINTENANCE:

- For active field operations. vegetative buffer zones shall be inspected weekly and following each storm event producing greater than 0.5 inches of precipitation.
- When site activity has ceased and significant surface runoff is not likely (arid season), inspections shall be conducted at least every other month and following each storm event producing greater than 0.5 inches of precipitation.
- If an additional inspection frequency is specified within a Storm Water Pollution Prevention (SWPP) Plan, this frequency shall be followed.
- Inspections shall be documented on the BMP Inspection and Maintenance Form.
- Inspectors should identify in particular:
    - Correct installation or maintenance.
    - Effectiveness in controlling storm water runoff, erosion, and sediment transport.

- Damage that has occurred since the last inspection.
- Required maintenance.
- Evidence of erosion or other damage in the surrounding area.

- When establishing vegetation, inspect seeded area for uniform growth.
- Conduct required repairs immediately and document them in the current or next inspection record.

Environmental media (e.g. soil, sediment, surface and ground water) is not considered waste. However, contaminated environmental media may constitute solid waste and/or hazardous waste. If there is any potential for accumulated sediment to be contaminated, a waste determination must be made and documented. For guidance, see the Laboratory's LIRs on Radioactive Waste, Managing Solid Waste, and Hazardous and Mixed Waste Requirements for Generators.

Inspection plans and records shall be maintained by the owner/operator, and made available for future regulatory inspections.

REMOVAL CRITERIA:

- Vegetative buffer zones shall not be removed unless additional controls are implemented, or the area is to be developed.

For assistance with BMP selection, installation, or maintenance, please contact ESH-18 at 665-4752.

VEGETATED BUFFER ZONES

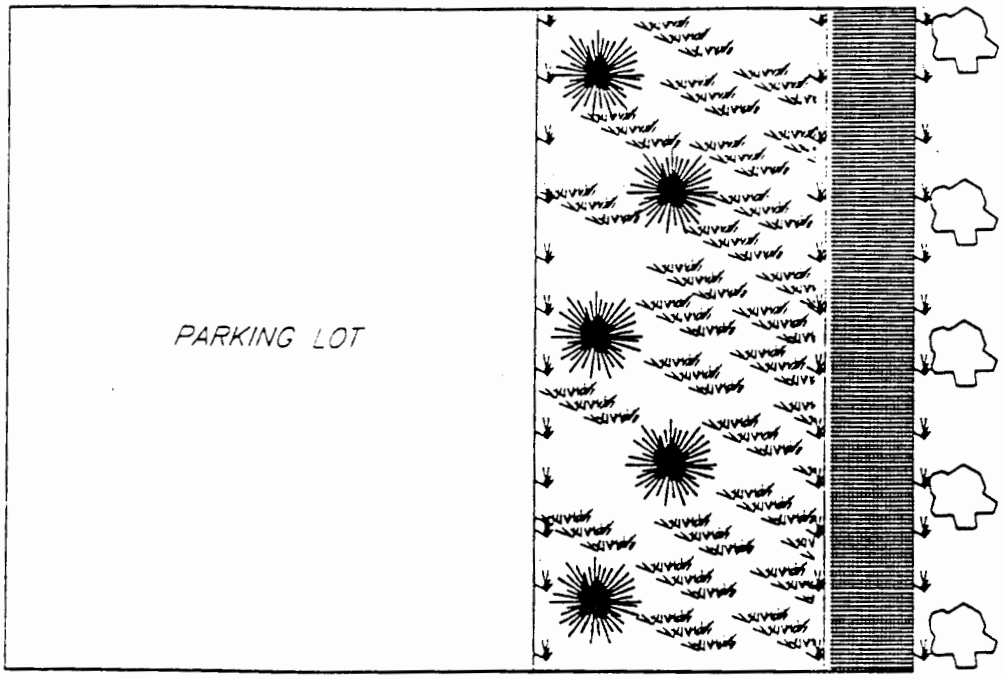

PLAN VIEW

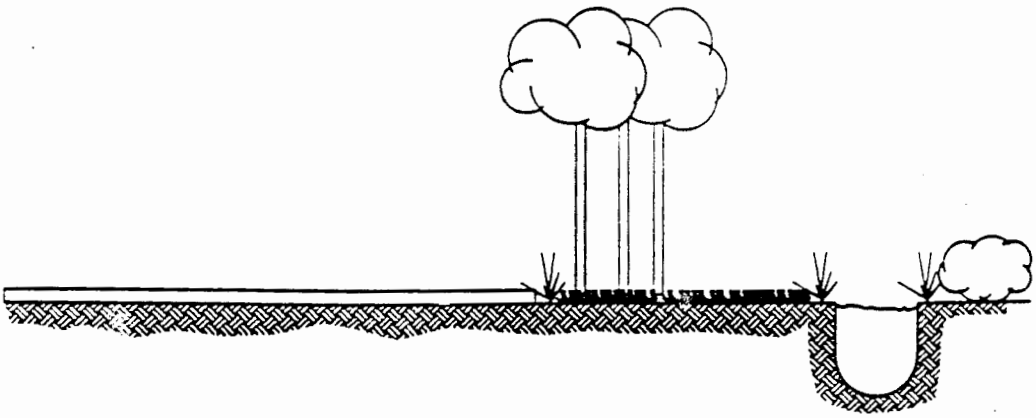

TYPICAL SECTION

MULCHING

GENERAL DESCRIPTION:

Mulching is a temporary soil stabilization practice wherein a protective layer of material is applied to a soil surface. Materials most often used include straw, woodchips, wood fibers, coconut fibers, and excelsior. The purpose of mulch is to stabilize soil and minimize erosion by protecting the soil surface from raindrop impact. Mulch is also effective in increasing infiltration rates, conserving moisture, and aiding in seed germination. Mulch may be applied as loose material or as matting, which is mulch material that is enveloped in a biodegradable netting. This section will focus on the application of loose mulch material. Matting is discussed in the following section on page 54.

PROS:

- May be applied by hand or by machinery
- Increases infiltration rates and aids in the germination of vegetation
- Can be applied to any site
- Requires no removal

CONS:

- Due to covering, the germination of some seeds may be delayed
- The application of loose mulch material may have to be repeated due to site activity, wind, or large storm events

INSTALLATION GUIDELINES:

- Mulch shall be applied following the completion of seeding.
- On seeded sites, mulch material shall not be applied more than 2 inches deep, unless incorporated into the soil by tracking, discing, or crimping.
- Storm water diversion and conveyance controls shall be installed to divert concentrated flows away from seeded areas.

Straw

- To prevent the vegetation of noxious weeds, use clean wheat, barley, oat, or rice straw.
- Ensure that the straw in not moldy or compacted.
- Either by hand or machine, evenly distribute straw to a depth of 2-4 inches,
- Cover the exposed area to a uniform depth with the soil surface being barely visible.
- For seeded sites, 80% of the soil surface should be covered.
- For unseeded sites, 90% of the soil surface should be covered.
- One 80 lbs bale of straw will adequately cover approximately 1000 ft^2.
- Straw shall be anchored immediately to minimize cover loss from wind or water. Anchoring techniques include crimping, tracking, discing, or covering the material with netting.

Straw Anchoring Techniques

- If the straw has been distributed by hand it may be anchored by incorporating it into the soil with a dull, round-nosed shovel. This should be done every 1-2 feet.
- While limited in its operational constraints, tractor drawn tools which incorporate the straw into the top 2-8 inches of soil provide optimum anchoring.
- For slopes of 3:1 or less, tracking with heavy equipment is an effective way to anchor straw. Tracking equipment shall operate perpendicular to the direction of flow.
- Netting is typically made from jute, wood fiber, plastic, paper or cotton, and may also be used to cover straw mulch.

Wood chips or Bark

- Evenly distribute the material to a surface depth of 2-3 inches.
- The application rate for wood chips or bark is approximately 6 tons/acre or 275 lbs/1,000 ft^2.

INSPECTION AND MAINTENANCE:

- For active field operations, areas with mulch shall be inspected weekly and following each storm event producing greater than 0.5 inches of precipitation.
- When site activity has ceased and significant surface runoff is not likely (arid season), inspections shall be conducted at least every other month and following each storm event producing greater than 0.5 inches of precipitation.
- If an additional inspection frequency is specified within a Storm Water Pollution Prevention (SWPP) Plan, this frequency shall be followed.
- Inspections shall be documented on the BMP Inspection and Maintenance Form.
- Inspectors should identify in particular:
    - Correct installation.
    - Effectiveness in controlling storm water runoff, erosion, and sediment transport.
    - Damage that has occurred since the last inspection.
    - Required maintenance.
    - Evidence of erosion or other damage in the surrounding area.
- Inspect mulched areas for adequate and uniform cover.
- Conduct required repairs immediately and document them in the current or next inspection record.

Inspection plans and records shall be maintained by the owner/operator, and made available for future regulatory inspections.

REMOVAL CRITERIA:

None

For assistance with BMP selection, installation, or maintenance, please contact ESH-18 at 665-4752.

MATTING

GENERAL DESCRIPTION:

Matting involves the application of protective mulch matting to a prepared soil surface. Mulch matting is material (most commonly straw, jute, or wood or coconut fibers) that has been formed into sheets of mulch. The material is machine produced and is evenly distributed between biodegradable natural fiber netting. Netting is typically made from jute, wood fiber, plastic, paper or cotton. Matting is used to temporarily stabilize and protect disturbed soil. Its use also increases infiltration rates and aids in the germination of vegetation. Typical applications for matting include disturbed or exposed areas, slopes, and channelized waterways.

PROS:

- Provides immediate soil stabilization and erosion control
- Can aid the establishment of vegetation in waterways
- Increases infiltration rates and aids in the germination of vegetation
- Requires no removal

CONS:

- Due to covering, the germination of some seeds may be delayed
- Netting may interfere with maintenance efforts (mowing, weedeating, etc)
- If mulch material degrades or is washed away prior to the biodegration of the netting, netting material may have to be removed and properly disposed of.

INSTALLATION GUIDELINES:

Site Preparation

- Grade the installation area as appropriate to ensure firm, continuous contact between the material and the soil.
- Remove all large rocks, clods, or other obstructions that will interfere with the appropriate soil contact.
- For compacted, crusted or hardened soil, loosen with discing, raking or harrowing. For sandy soils, tracking with heavy equipment cleats is effective.
- The seedbed should be approximately 3-5 inches deep. Ensure that the top 3 inches is loose, moist soil.

Seeding

- For erosion control and re-vegetation, seed the area prior to mat installation. Areas disturbed during mat installation may require reseeding.
- For turf reinforcement, seed the area after mat installation.

Anchoring

- Matting shall be anchored to the ground using U-shaped wire staples, metal geotextile stake pins, or wooden stakes. Anchors should be a minimum of 6-8 inches long, having sufficient ground penetration to resist pullout. Wire staples should be a minimum of 11 gauge and stake pins should be a minimum 3/16 inch in diameter steel with a 1 1/2 inch steel washer at the head of the pin. Both shall be driven flush with the ground surface.

Slope Installation

- At the top of the slope anchor the mat in a trench that is a minimum of 6 inches deep x 6 inches wide. Backfill material shall be firmly tamped.
- Ensure the matting is unrolled in the direction of the water flow.
- Maintain direct soil contact during placement.
- Overlap the edges of adjacent parallel rolls 2-3 inches and anchor mat approximately every 3 feet.
- If mat splicing is required, provide a 6 inch overlap between mats and place anchors, approximately 12 inches apart, in the overlapped area.

- Anchor the matting as req[illegible]l to maintain contact with the soil.

Channel Installation

- At the lower end of the project area, excavate an anchor trench approximately 12 inches deep and 6 inches wide.
- Excavate intermittent check slots, 6 inches (0.2 m) deep and 6 inches (0.2 m) wide across the channel at 25-30 foot (7.6-9.1 m) intervals along the channel.
- To bury edges of the matting, excavate longitudinal anchor slots 4 inches deep and 4 inches wide along each side of the installation area. Extend the matting 2-3 inches above the crest of channel side slopes.
- The ends of mats shall be secured with anchors at 1 foot intervals. Firmly tamp backfill material.
- Overlap adjacent parallel rolls and splice as is detailed in the previous section.
- Unroll the matting in an upstream direction, stopping at each anchor slot.
- Anchor upstream end of matting in 12 inch deep x 6 inch wide trench. Firmly tamp backfill material.
- Anchor the matting as required to maintain contact with the soil.

INSPECTION AND MAINTENANCE:

- For active field operations, areas with matting shall be inspected weekly and following each storm event producing greater than 0.5 inches of precipitation.
- When site activity has ceased and significant surface runoff is not likely (arid season), inspections shall be conducted at least every other month and following each storm event producing greater than 0.5 inches of precipitation.
- If an additional inspection frequency is specified within a Storm Water Pollution Prevention (SWPP) Plan, this frequency shall be followed.
- Inspections shall be documented on the BMP Inspection and Maintenance Form.
- Inspectors should identify in particular:
    - Correct installation.
    - Effectiveness in controlling storm water runoff, erosion, and sediment transport.
    - Damage that has occurred since the last inspection.
    - Required maintenance.
    - Evidence of erosion or other damage in the surrounding area.
- Inspect installation area for erosion and undermining.
- Conduct required repairs immediately and document them in the current or next inspection record.

Inspection plans and records shall be maintained by the owner/operator, and made available for future regulatory inspections.

REMOVAL CRITERIA:

None

For assistance with BMP selection, installation, or maintenance, please contact ESH-18 at 665-4752.

MATTING

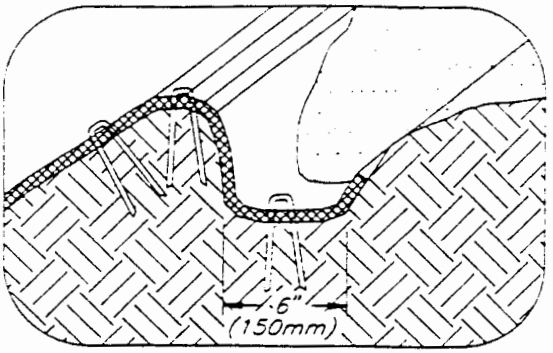

LONGITUDINAL ANCHOR TRENCH

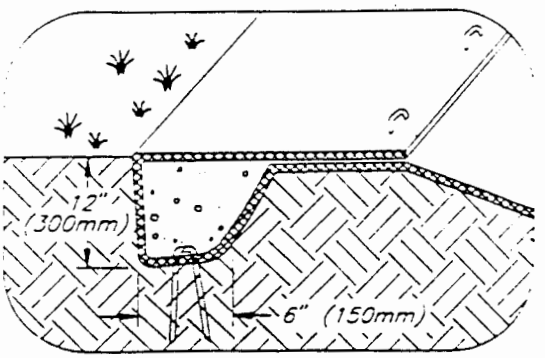

TERMINAL SLOPE AND CHANNEL ANCHOR TRENCH

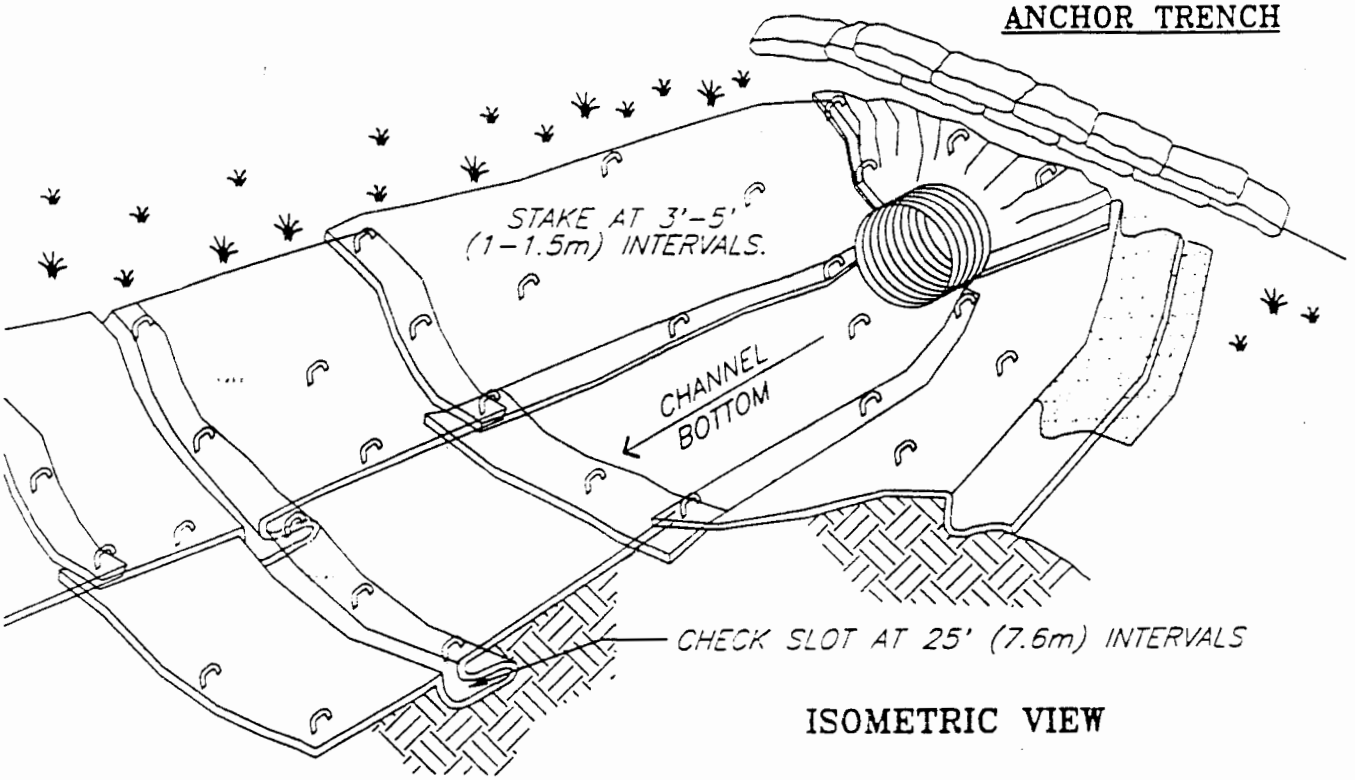

ISOMETRIC VIEW

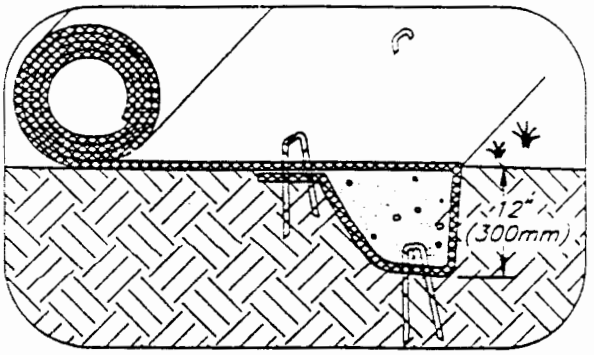

INITIAL CHANNEL ANCHOR TRENCH

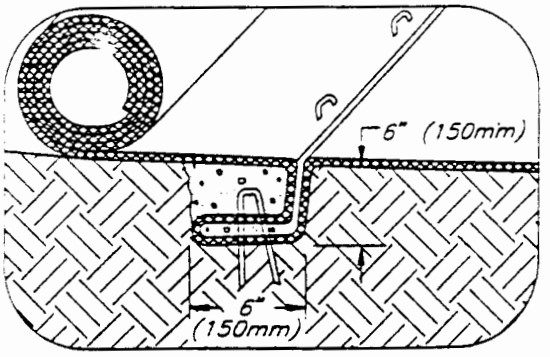

INTERMITTENT CHECK SLOT

NOTES:

1. CHECK SLOTS TO BE CONSTRUCTED PER MANUFACTURERS SPECIFICATIONS.

2. STAKING OR STAPLING LAYOUT PER MANUFACTURERS SPECIFICATIONS.

MATTING

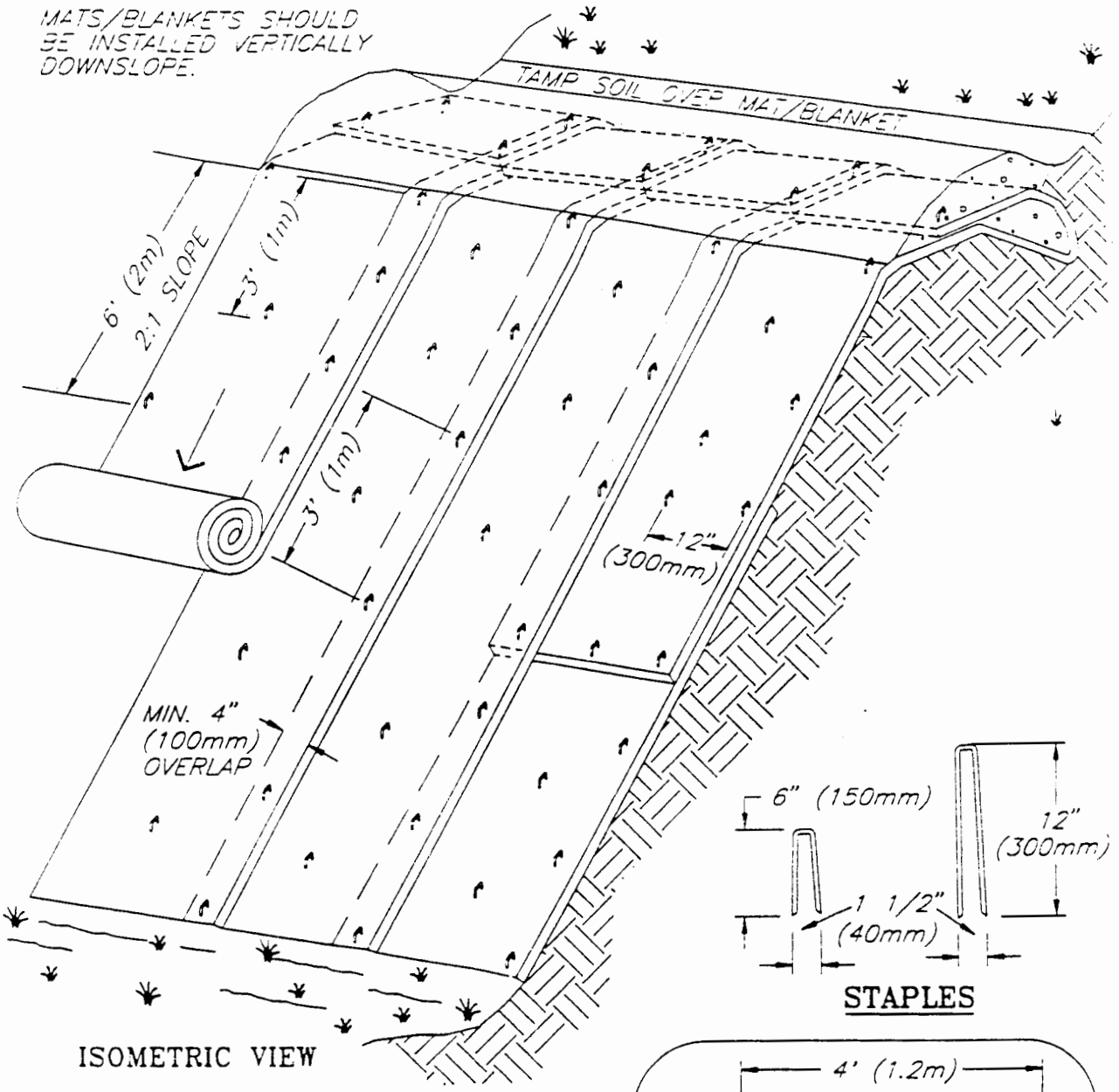

TYPICAL SLOPE SOIL STABLIZATION

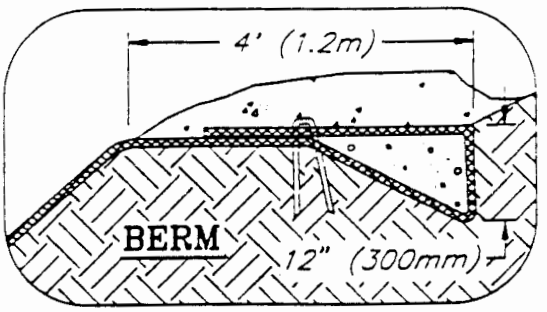

NOT TO SCALE

NOTES:

1. SLOPE SURFACE SHALL BE FREE OF ROCKS, CLODS, STICKS AND GRASS. MATS/BLANKETS SHALL HAVE GOOD SOIL CONTACT.

2. APPLY PERMANENT SEEDING BEFORE PLACING BLANKETS.

3. LAY BLANKETS LOOSELY AND STAKE OR STAPLE TO MAINTAIN DIRECT CONTACT WITH THE SOIL. DO NOT STRETCH.

TEMPORARY SEEDING

GENERAL DESCRIPTION:

Temporary seeding involves providing short-term vegetative cover to disturbed surfaces or other areas that pose a high risk of erosion. The primary difference between temporary and permanent seeding is the use of fast-growing grasses. By quickly stabilizing the area with temporary seeding, erosion and sediment transport can be reduced until permanent stabilization controls can be implemented. Typical areas appropriate for temporary seeding include soil stockpiles, berms, dams, areas adjacent to roadways, and denuded areas exposed to seasonal rains or subject to erosion for more than 30 days.

PROS:

- Inexpensive and easy to install
- Under the right climate conditions, provides rapid vegetative cover
- An aesthetic control
- Increases infiltration rates, reducing storm water runoff
- May reduce the maintenance costs of other erosion controls in the area

CONS:

- Establishment of vegetation is dependent upon the season and rainfall rates
- Following seeding, area requires protection from heavy use
- To effectively control erosion, proper seedbed preparation and the use of quality seed is required
- Once vegetated, the area may require ongoing irrigation and maintenance

INSTALLATION GUIDELINES:

Site Preparation

- Grade the area as needed for proper seedbed preparation.
- If the soil has recently been disturbed, no additional roughening is required.
- For compacted, crusted or hardened soil, loosen with discing, raking or harrowing. For sandy soils, tracking with heavy equipment cleats is effective.
- The seedbed should be approximately 3-5 inches deep. Ensure that the top 3 inches is loose, moist soil free of large clods and stones.
- Storm water diversion and conveyance controls shall be installed to divert concentrated flows away from seeded areas.

Planting

- Seeding should be completed as soon as practicable following completion of land disturbing activities.
- The spreading of mulch should immediately follow seeding when seeding in adverse soil conditions, during excessively hot or dry weather, where heavy rains are expected, or on slopes greater than 2:1.
- Seed shall be applied uniformly using calibrated spreaders, cyclone seeders, mechanical drills, broadcast spreading, or hydroseeders.
- Apply fertilizer and/or lime as soil conditions require.
- To provide adequate seed-soil contact, incorporate the seed into the soil by raking or chain dragging and lightly compact the soil so that the seedbed is firm.

Seed Mixes

- Native vegetation appropriate to the season and site conditions shall be used.
- See Section 222.7 of the LANL Architectural Standards Manual, Volume 4, for guidance on applicable seed mixes.

INSPECTION AND MAINTENANCE:

- For active field operations, areas with temporary seeding shall be inspected weekly and following each storm event producing greater than 0.5 inches of precipitation.
- When site activity has ceased and significant surface runoff is not likely (arid season), inspections shall be conducted at least every other month and following each storm event producing greater than 0.5 inches of precipitation.
- If an additional inspection frequency is specified within a Storm Water Pollution Prevention (SWPP) Plan, this frequency shall be followed.
- Inspections shall be documented on the BMP Inspection and Maintenance Form.
- Inspectors should identify in particular:
    - Correct installation.
    - Effectiveness in controlling storm water runoff, erosion, and sediment transport.
    - Damage that has occurred since the last inspection.
    - Required maintenance.
    - Evidence of erosion or other damage in the surrounding area.
- Inspect seeded area for uniform growth of vegetation.
- Conduct required repairs immediately and document them in the current or next inspection record.

Inspection plans and records shall be maintained by the owner/operator, and made available for future regulatory inspections.

REMOVAL CRITERIA:

- Seeded areas shall not be disturbed until the area has been stabilized with vegetation.
- Final vegetative stabilization is defined as 70% of the vegetative cover that would exist under normal site conditions. This determination shall be made by the Water Quality & Hydrology Group (ESH-18).

For assistance with BMP selection, installation, or maintenance, please contact ESH-18 at 665-4752.

PERMANENT SEEDING

GENERAL DESCRIPTION:

Permanent seeding is the establishment of long-term perennial vegetative cover to disturbed surfaces or other areas that pose a high risk of erosion. Through permanent stabilization, erosion and sediment transport is reduced and the volume of runoff is diminished due to increased infiltration rates. Typical areas appropriate for permanent seeding include denuded areas where long-term vegetative cover is desired, buffer areas, steep slopes, stream banks, and areas where soils are unstable.

PROS:

- Relatively inexpensive
- An aesthetic control
- Increases infiltration rates and reduces erosion and sediment transport
- Very effective in stabilizing the soil

CONS:

- Establishment of vegetation is dependent upon the season and rainfall rates
- Requires site area that is at final grade
- May require ongoing irrigation and maintenance to establish vegetation

INSTALLATION GUIDELINES:

Timing

- Permanent seeding to areas to be void of activity for 1 year or more.
- Permanent seeding should be applied when an area has achieved final grade and no further disturbances are planned.
- Permanent seeding shall be applied prior to seasonal rains or freezing weather.
- For late fall or winter seeding schedules, dormant seeding mixes shall be used.

Site Preparation

- Area to be seeded shall be brought to final grade.
- Storm water diversion and conveyance controls shall be installed to divert concentrated flows away from seeded areas.
- If the soil has recently been disturbed, no additional roughening is required.
- For compacted, crusted or hardened soil, loosen with discing, raking or harrowing. For sandy soils, tracking with heavy equipment cleats is effective.
- The seedbed should be approximately 3-5 inches deep. Ensure that the top 3 inches is loose, moist topsoil free of large clods and stones.

Planting

- Seeding should be initiated as soon as practicable following completion of final grading activities.
- If seeding requires harrowing, tracking, or furrowing, these activities shall be conducted horizontally across the face of the slope.
- The spreading of mulch should immediately follow seeding when seeding in adverse soil conditions, during excessively hot or dry weather, where heavy rains are expected, or on slopes greater than 2:1.
- Seed shall be applied uniformly using calibrated spreaders, cyclone seeders, mechanical drills, broadcast spreading, or hydroseeders.
- Apply fertilizer and/or lime as soil conditions require.
- To provide adequate seed-soil contact, incorporate broadcast seed into the soil by raking or chain dragging. Lightly compact the soil so that the seedbed is firm.

Seed Mixes

- Native vegetation appropriate to the season and site conditions shall be used.
- Seed mixes shall include annuals, perennials and legumes.
- See Section 222.7 of the LANL Architectural Standards Manual, Volume 4, for guidance on applicable seed mixes.

INSPECTION AND MAINTENANCE:

- For active field operations, areas with permanent seeding shall be inspected weekly and following each storm event producing greater than 0.5 inches of precipitation.
- When site activity has ceased and significant surface runoff is not likely (arid season), inspections shall be conducted at least every other month and following each storm event producing greater than 0.5 inches of precipitation.
- If an additional inspection frequency is specified within a Storm Water Pollution Prevention (SWPP) Plan, this frequency shall be followed.
- Inspections shall be documented on the BMP Inspection and Maintenance Form.
- Inspectors should identify in particular:
    - Correct installation.
    - Effectiveness in controlling storm water runoff, erosion, and sediment transport.
    - Damage that has occurred since the last inspection.
    - Required maintenance.
    - Evidence of erosion or other damage in the surrounding area.
- Inspect seeded area for uniform growth of vegetation.
- "Spot" seed small bare areas to increase vegetative cover.
- Conduct required repairs immediately and document them in the current or next inspection record.

Inspection plans and records shall be maintained by the owner/operator, and made available for future regulatory inspections.

REMOVAL CRITERIA:

- Seeded areas shall not be disturbed until the area has been stabilized with vegetation.
- Final vegetative stabilization is defined as 70% of the vegetative cover that would exist under normal site conditions. This determination shall be made by the Water Quality & Hydrology Group (ESH-18).

For assistance with BMP selection, installation, or maintenance, please contact ESH-18 at 665-4752.

RIPRAP

GENERAL DESCRIPTION:

Riprap is a foundation of irregularly placed stones designed to stabilize and protect areas subject to erosion. Its uses include cut-and fill slopes, channel sides and bottoms, conveyance inlets and outlets, stream bank stabilization, and shorelines subject to wave action. Riprap is identified as either graded, which includes a mixture of stone sizes, or uniform which constitutes stones of the same size. Stone sizes are designated by mean diameter or weight.

PROS:

- Versatile and erosion resistant material
- Can be used for high velocity flows
- When using graded riprap, provides a dense flexible cover
- Requires minimal maintenance

CONS:

- May be difficult to remove sediment accumulations
- Requires proper slope selection and surface preparation for long term success
- Depending on surrounding conditions, control may be unsightly

INSTALLATION GUIDELINES:

- For areas requiring riprap, schedule land disturbing activities so that riprap placement can immediately follow completion of surface preparation.
- Brush, trees, stumps, and other objects that would interfere with riprap placement shall be removed.
- To prevent soil movement through the riprap, install a filter beneath the riprap. The filter should consist of either a gravel layer or filter fabric.
- Gravel filter design is based on the ratio of particle size in the filter material to that of the subgrade base material.
- Layers of gravel filter material shall be a minimum of 6 inches thick.
- The subgrade for the filter shall conform to the design elevations. Required fill shall be compacted to the density of the surrounding undisturbed material.
- When using filter fabric, connect joints with a minimum overlap of 1 foot and space anchor pins approximately every 3 feet along the overlap. The ends of the fabric shall be buried to a minimum depth of 12 inches.
- Ensure that the fabric material is protected from damage during installation.
- Riprap placement should immediately follow filter installation.
- Riprap shall be either uniform or graded stone.
- Riprap shall not be place by methods that cause a segregation of stone sizes.
- Riprap placement should form a mass of stones with a minimum of voids.
- Ensure that the filter and underlying layers are not disturbed during placement.
- Following installation, stabilize all disturbed areas.
- For additional information on riprap selection and installation, see Section 602 of the New Mexico State Highway and Transportation Department Standard Specifications for Highway and Bridge Construction.

INSPECTION AND MAINTENANCE:

- For active field operations, riprap shall be inspected weekly and following each storm event producing greater than 0.5 inches of precipitation.

- When site activity has ceas[illegible] and significant surface runoff is not likely ([illegible] season), inspections shall be conducted at least every other month and following each storm event producing greater than 0.5 inches of precipitation.
- If an additional inspection frequency is specified within a Storm Water Pollution Prevention (SWPP) Plan, this frequency shall be followed.
- Inspections shall be documented on the BMP Inspection and Maintenance Form.
- Inspectors should identify in particular:
    - Correct installation.
    - Effectiveness in controlling runoff, sediment transport, and erosion.
    - Damage that has occurred since the last inspection.
    - Required maintenance.
    - Sediment accumulations and the need to remove the accumulations.
    - Evidence of erosion or other damage in the surrounding area.
- Inspect for erosion around the riprap and the dislodgment of stones.
- At a minimum, accumulated sediment shall be removed when stones are no longer visible.
- Removed sediment accumulations shall not be placed within any drainage, either above or below the BMP.
- Removed sediment shall be stabilized to prevent future migration from storm water runoff.
- Required repairs should be conducted immediately and documented in the current or next inspection record.

Environmental media (e.g. soil, sediment, surface and ground water) is not considered waste. However, contaminated environmental media may constitute solid waste and/or hazardous waste. If there is any potential for accumulated sediment to be contaminated, a waste determination must be made and documented. For guidance, see the Laboratory's LIRs on Radioactive Waste, Managing Solid Waste, and Hazardous and Mixed Waste Requirements for Generators.

Inspection plans and records shall be maintained by the owner/operator, and made available for future regulatory inspections.

REMOVAL CRITERIA:

- Riprap shall not be removed unless the conveyance or channel is no longer in use, or the area is to be stabilized with another type of control.

For assistance with BMP selection, installation, or maintenance, please contact ESH-18 at 665-4752.

RIPRAP PROTECTION

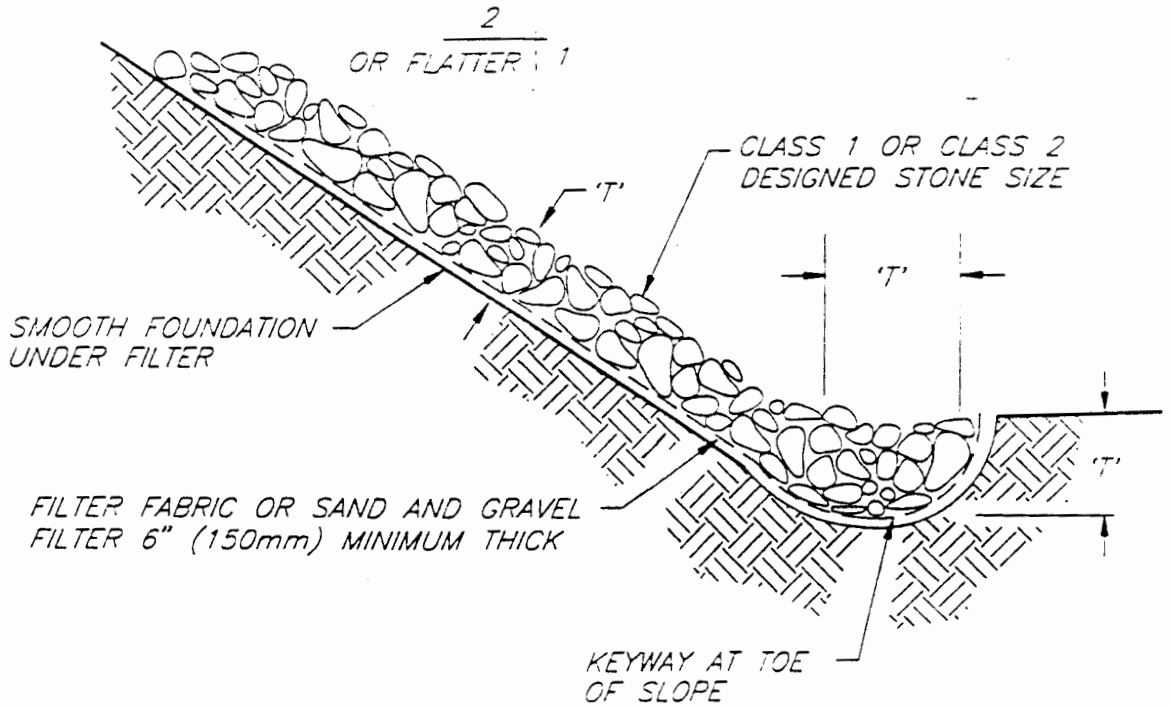

TYPICAL SECTION

NOTE:
'T' = THICKNESS: THICKNESS SHALL BE DETERMINED BY THE ENGINEER.

MINIMUM THICKNESS SHALL BE 1.5x THE MAXIMUM STONE DIAMETER, NEVER LESS THAN 6" (150mm).

GABIONS

GENERAL DESCRIPTION:

A gabion is wire enclosed riprap that forms a pervious structure designed to stabilize and protect channels and slopes subject to erosion. By trapping sediment between the stones, gabions also facilitate vegetative growth. The traditional gabion is a rectangular basket used as a building block for retaining walls and grade control structures. Gabion mattresses, which are not as thick as traditional gabions, are used to line storm drain outlets and channel side slopes and bottoms. The wire used in gabion construction is typically double-twist, hexagonal mesh or welded wire.

PROS:

- Versatile and erosion resistant material
- Can be used for high velocity flows
- Supports vegetative growth
- Requires minimal maintenance
- Requires less thickness than an equivalent riprap design

CONS:

- If necessary, may be difficult to remove sediment accumulations
- When used as a retaining wall or grade control structure, requires a formal design
- Depending on surrounding conditions, control may be unsightly

INSTALLATION GUIDELINES:

Gabion installation should be done in accordance with the design requirements and manufacturers' standards and specifications. Additional general information on gabion installation follows:

- Gabions should be of single-unit construction and be fabricated so they can be assembled at the construction site.
- When gabions are assembled, corners should be first joined together. Untied edges shall be assembled by tying with lacing wire or approved fasteners.
- To ensure that erosion does not occur beneath or around the structures, gabions and gabion mattresses shall be secured to the streambank or streambed.
- Excavate loose material as necessary to establish a stable foundation for each structure.
- Gabion baskets should be joined together along adjacent edges, both horizontally and vertically.
- Following filling, the tops of the gabions should be closed along edges with lacing wire or approved fasteners. Voids and bulges in the gabions should be kept to a minimum
- Gabions should be filled with 3-5 inch stone.
- Gabion mattresses should be filled with 4-8 inch stone.
- For additional information on gabion installation, see Section 602 of the New Mexico State Highway and Transportation Department Standard Specifications for Highway and Bridge Construction.

INSPECTION AND MAINTENANCE:

- For active field operations, gabions shall be inspected weekly and following each storm event producing greater than 0.5 inches of precipitation.
- When site activity has ceased and significant surface runoff is not likely (arid season), inspections shall be conducted at least every other month and following each storm event producing greater than 0.5 inches of precipitation.
- If an additional inspection frequency is specified within a Storm Water Pollution Prevention (SWPP) Plan, this frequency shall be followed.

- Inspections shall be documented on the BMP Inspection and Maintenance Form.
- Inspectors should identify in particular:
    - Correct installation.
    - Effectiveness in controlling runoff, sediment transport, and erosion.
    - Damage that has occurred since the last inspection.
    - Required maintenance.
    - Evidence of erosion or other damage in the surrounding area.
- Inspect for erosion around and beneath the gabions.
- Required repairs should be conducted immediately and documented in the current or next inspection record.

Environmental media (e.g. soil, sediment, surface and ground water) is not considered waste. However, contaminated environmental media may constitute solid waste and/or hazardous waste. If there is any potential for accumulated sediment to be contaminated, a waste determination must be made and documented. For guidance, see the Laboratory's LIRs on Radioactive Waste, Managing Solid Waste, and Hazardous and Mixed Waste Requirements for Generators.

Inspection plans and records shall be maintained by the owner/operator, and made available for future regulatory inspections.

REMOVAL CRITERIA:

- Gabions shall not be removed unless the conveyance or channel is no longer in use, or the area is to be stabilized with another type of control.

For assistance with BMP selection, installation, or maintenance, please contact ESH-18 at 665-4752.

GABIONS

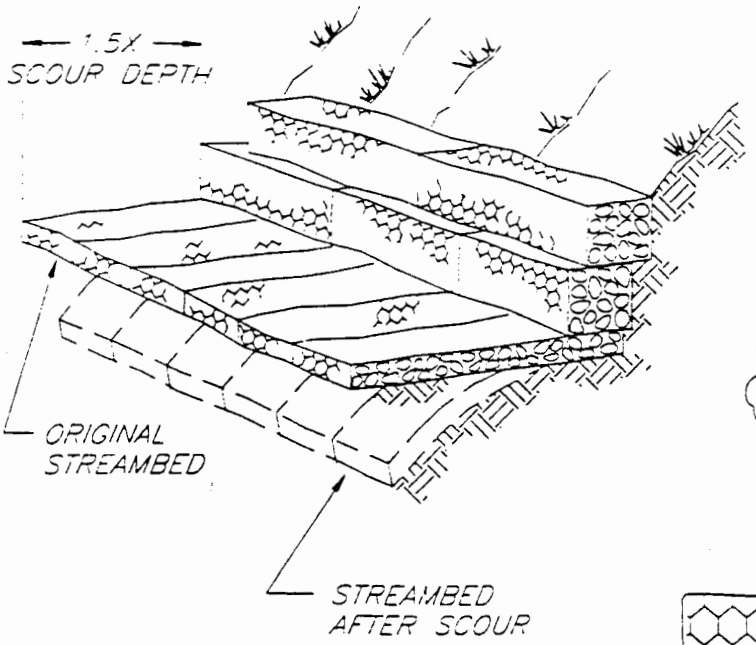

TYPICAL GABION APRON

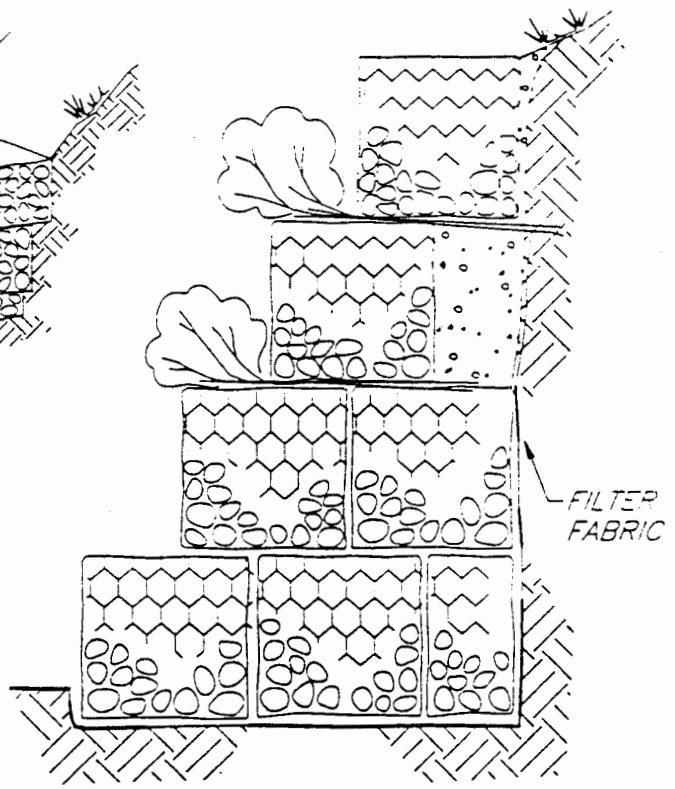

TYPICAL VEGETATED ROCK GABION

TYPICAL GABION AND GABION MATTRESS

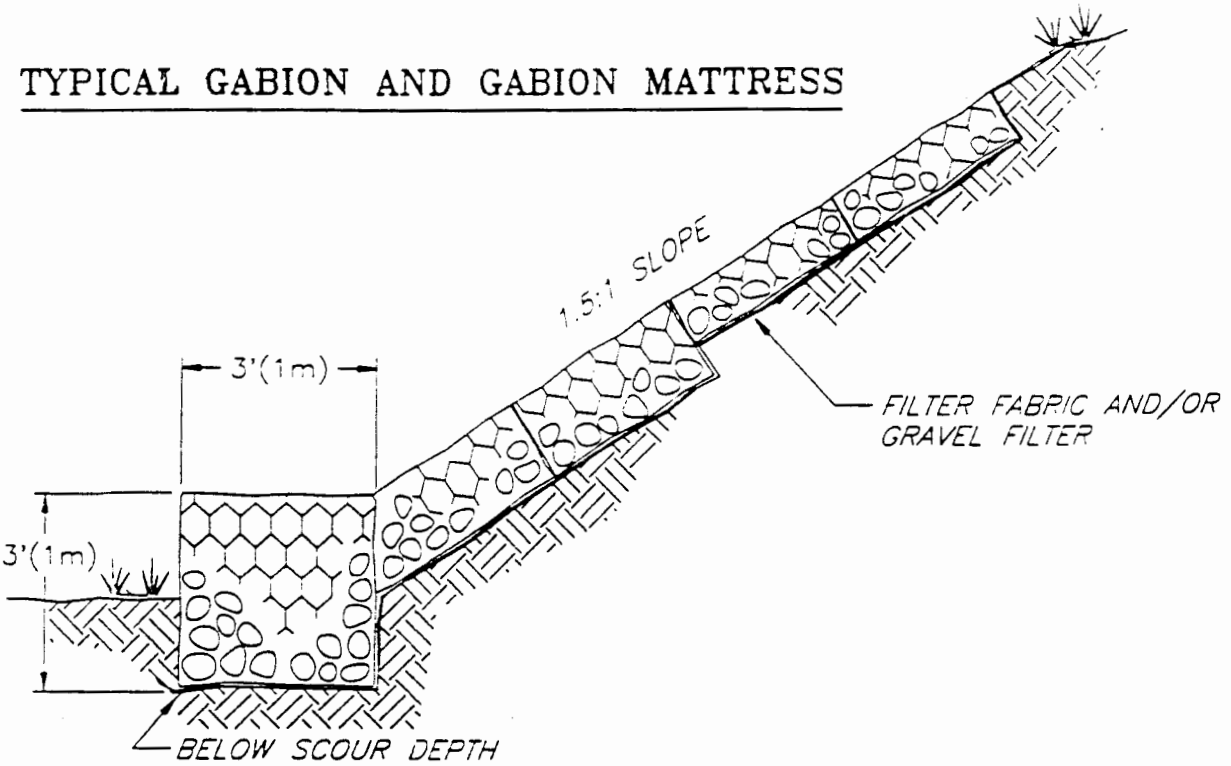

STORM DRAIN OUTLET PROTECTION

GENERAL DESCRIPTION:

Storm drain outlet protection consists of a structural control at a drain outlet that reduces velocity and dissipates energy in concentrated storm water runoff. These controls typically include riprap, concrete aprons, asphalt paved sections, and stilling basins, with riprap being the most common. In reducing velocity and dissipating energy, outlet protections minimize or eliminate scour at the outlet and downstream erosion.

PROS:

- Can be used for high velocity flows
- When using riprap, provides a relatively inexpensive control
- Requires minimal maintenance
- May be designed to remove sediment in addition to reducing velocity
- Minimizes scour and downstream erosion

CONS:

- If necessary, may be difficult to remove sediment accumulations
- Depending on surrounding conditions, control may be unsightly
- If using concrete, may be expensive for design and construction

INSTALLATION GUIDELINES:

- Design factors for outlet protection shall include peak runoff or design discharge of the conveyance, tailwater depth, and apron size.
- For outlets that discharge into a well defined channel, determine the maximum tailwater depth and extend the apron up the channel banks 0.5 feet above this depth.
- For concrete aprons, paved asphalt sections, and stilling basins, a formal design shall be prepared.

Riprap

- Riprap aprons should extend downstream until stable conditions are achieved, even if calculated lengths are exceeded.
- To prevent soil movement through the riprap, install a filter beneath the riprap that consists of a gravel layer or filter fabric.
- The subgrade for the filter shall conform to the design elevations. Required fill shall be compacted to the density of the surrounding undisturbed material.
- When using filter fabric, ensure protection from damage during installation and connect joints with a minimum overlap of 1 foot.
- Riprap shall be a mixture of well graded stones.
- For riprap selection and installation see Section 602 of the New Mexico State Highway and Transportation Department Standard Specifications for Highway and Bridge Construction.
- Ensure that the riprap apron has zero grade and is properly aligned with the receiving stream. No overfall should exist at the end.
- Following installation, stabilize all disturbed areas.

INSPECTION AND MAINTENANCE:

- For active field operations, storm drain outlet protections shall be inspected weekly and following each storm event producing greater than 0.5 inches of precipitation.
- When site activity has ceased and significant surface runoff is not likely (arid season), inspections shall be conducted at least every other month and following each storm event producing greater than 0.5 inches of precipitation.

- If an additional inspection frequency is specified within a Storm Water Pollution Prevention (SWPP) Plan, this frequency shall be followed.
- Inspections shall be documented on the BMP Inspection and Maintenance Form.
- Inspectors should identify in particular:
    - Correct installation.
    - Effectiveness in controlling runoff, sediment transport, and erosion.
    - Damage that has occurred since the last inspection.
    - Required maintenance.
    - Sediment accumulations and the need to remove the accumulations.
    - Evidence of erosion or other damage in the surrounding area.
- For riprap aprons, inspect for erosion around the riprap and dislodgment of stones.
- Accumulated sediment shall be removed if it impedes appropriate energy dissipation.
- Removed sediment accumulations shall not be placed within any drainage, either above or below the BMP.
- Removed sediment shall be stabilized to prevent future migration from storm water runoff.
- Required repairs should be conducted immediately and documented in the current or next inspection record.

Environmental media (e.g. soil, sediment, surface and ground water) is not considered waste. However, contaminated environmental media may constitute solid waste and/or hazardous waste. If there is any potential for accumulated sediment to be contaminated, a waste determination must be made and documented. For guidance, see the Laboratory's LIRs on Radioactive Waste, Managing Solid Waste, and Hazardous and Mixed Waste Requirements for Generators.

Inspection plans and records shall be maintained by the owner/operator, and made available for future regulatory inspections.

REMOVAL CRITERIA:

- Storm drain outlet protections shall not be removed unless the conveyance is no longer in use.

For assistance with BMP selection, installation, or maintenance, please contact ESH-18 at 665-4752.

STORM DRAIN OUTLET PROTECTION

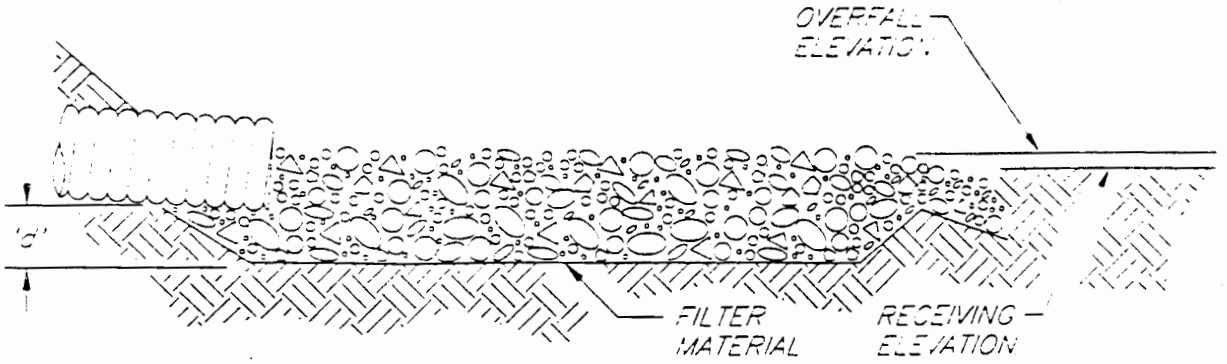

THICKNESS ('d') = 1.5 x MAX. ROCK DIAMETER – 6" (150mm) MIN.

SECTION

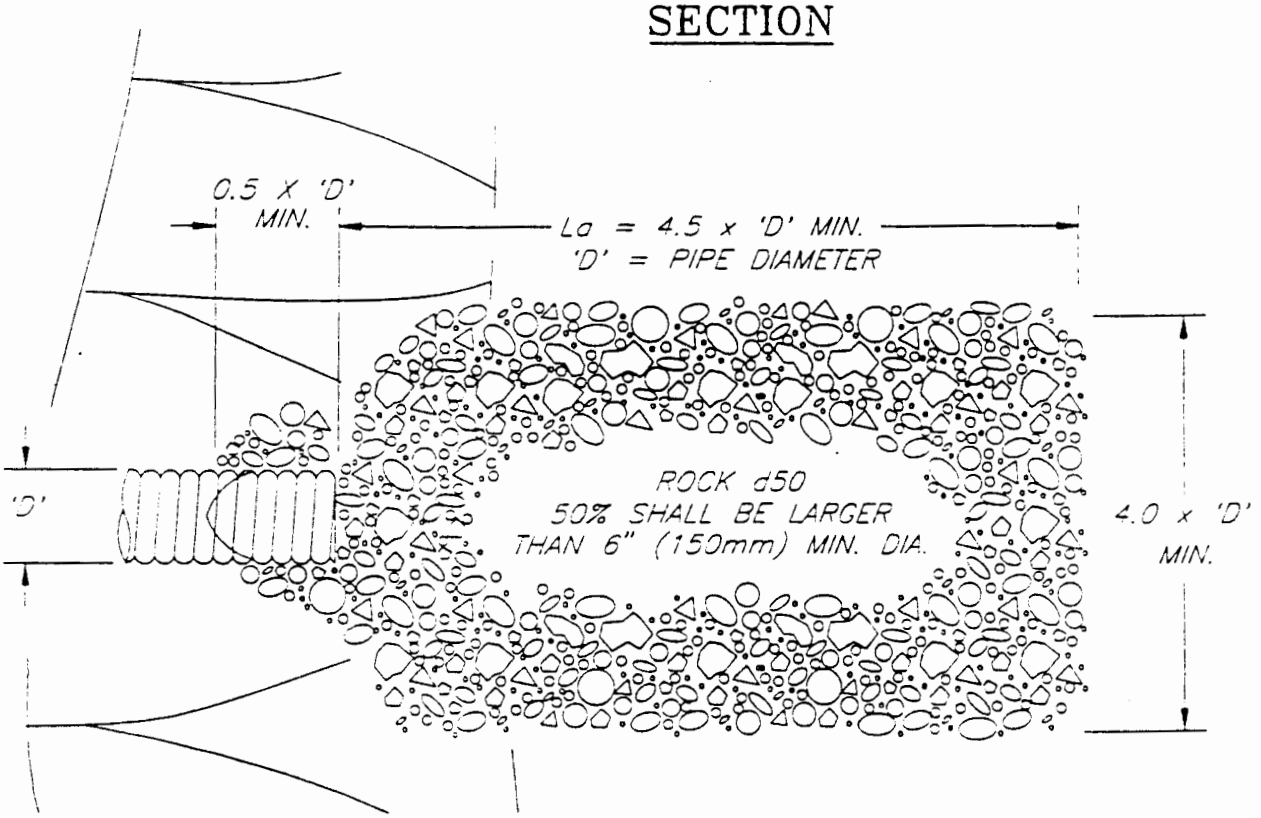

PLAN

NOTES:

1. 'La' = LENGTH OF APRON. DISTANCE 'La' SHALL BE OF SUFFICIENT LENGTH TO DISSIPATE ENERGY.
2. APRON SHALL BE SET AT A ZERO GRADE AND ALIGNED STRAIGHT.
3. FILTER MATERIAL SHALL BE FILTER FABRIC OR 6" (150mm) THICK MINIMUM GRADED GRAVEL LAYER.

CELLULAR CONFINEMENT SYSTEMS

GENERAL DESCRIPTION:

A cellular confinement system is a flexible, three-dimensional honeycomb structure designed to stabilize soil and prevent erosion. The individual cells in this permanent control confine and reinforce topsoil and all other types of fill material. This reinforcement protects a plant's root zone, permits subsurface drainage, and eliminates the downward movement of soil and the formation of rill erosion. Suitable applications for cellular confinement systems include channel stabilization, erosion control on slopes, the construction of revetments and retaining walls, road stabilization, and temporary low water crossings.

PROS:

- Effective in stabilizing soil and preventing erosion
- Can be used on steep slopes (1:1 or greater)
- Can be placed around large obstacles such as trees and boulders
- Through the reinforcement of fill material, increases load-bearing capacities
- Once established, requires minimal maintenance

CONS:

- More expensive than other stabilization controls
- Installation requires excavation of the area and compaction of the subgrade
- When used to support vegetation, requires surface treatments following the installation and placement of fill material

INSTALLATION GUIDELINES:

- Ensure that the installation area is a level surface. Remove stones and debris as needed. Large obstacles such as trees and boulders may be left in place. (Cellular confinement system may be placed around these objects)
- Gullies and other large depressions shall be filled and well compacted.
- Excavate as necessary to ensure that, upon installation, the top of the cells are flush with or slightly lower than the surrounding ground or final grade.
- Ensure that the subgrade surface conforms to design elevations and grades.
- For slope stabilization, installation shall begin at the top of the slope a minimum of 2 feet from the edge. Anchor the system and extend the panels down the slope.
- Cellular confinement shall be anchored using J-pins or other approved devices.
- Install anchors in every other cell, repeating this pattern every 6 feet. Ensure that cells are securely anchored to prevent deformation during backfilling. Provide additional anchoring as necessary.
- When joining separate confinement system panels, abut the sections and join with staples, hog rings or other approved fasteners.
- Following completion of installation, place fill material in the cells using suitable equipment.
- When placing fill on steep slopes, infill from the crest to the toe.
- The maximum drop height for fill material shall be 3 feet.
- The depth of overfill and rate of compaction are dependent upon the type of fill material. General guidelines are:
  - For topsoil, overfill depth should be 1-2 inches. Material should be compacted until it is flush with the top edge of the cell wall.
  - For loose, granular material, overfill depth should be no more than 1 inch. Material should be compacted until it is flush with the top edge of the cell wall.
- Surface treatments to establish vegetative growth shall immediately follow placement of fill material.
- Areas disturbed during installation shall be stabilized.

INSPECTION AND MAINTENANCE:

- For active field operations, cellular confinement systems shall be inspected weekly and following each storm event producing greater than 0.5 inches of precipitation.
- When site activity has ceased and significant surface runoff is not likely (arid season), inspections shall be conducted at least every other month and following each storm event producing greater than 0.5 inches of precipitation.
- If an additional inspection frequency is specified within a Storm Water Pollution Prevention (SWPP) Plan, this frequency shall be followed.
- Inspections shall be documented on the BMP Inspection and Maintenance Form.
- Inspectors should identify in particular:
    - Correct installation.
    - Effectiveness in controlling runoff, sediment transport, and erosion.
    - Damage that has occurred since the last inspection.
    - Required maintenance.
    - Evidence of erosion or other damage in the surrounding area.
- Inspect for uniform establishment of vegetation. (70% of the vegetative cover that would exist under normal site conditions constitutes final vegetative stabilization) Reseed areas as necessary.
- Removed sediment accumulations shall not be placed within any drainage, either above or below the BMP.
- Removed sediment shall be stabilized to prevent future migration from storm water runoff.
- Required repairs should be conducted immediately and documented in the current or next inspection record.

Environmental media (e.g. soil, sediment, surface and ground water) is not considered waste. However, contaminated environmental media may constitute solid waste and/or hazardous waste. If there is any potential for accumulated sediment to be contaminated, a waste determination must be made and documented. For guidance, see the Laboratory's LIRs on Radioactive Waste, Managing Solid Waste, and Hazardous and Mixed Waste Requirements for Generators.

Inspection plans and records shall be maintained by the owner/operator, and made available for future regulatory inspections.

REMOVAL CRITERIA:

NONE (Cellular confinement is a permanent control)

For assistance with BMP selection, installation, or maintenance, please contact ESH-18 at 665-4752.

CELLULAR CONFINEMENT SYSTEM FOR SLOPE STABILIZATION

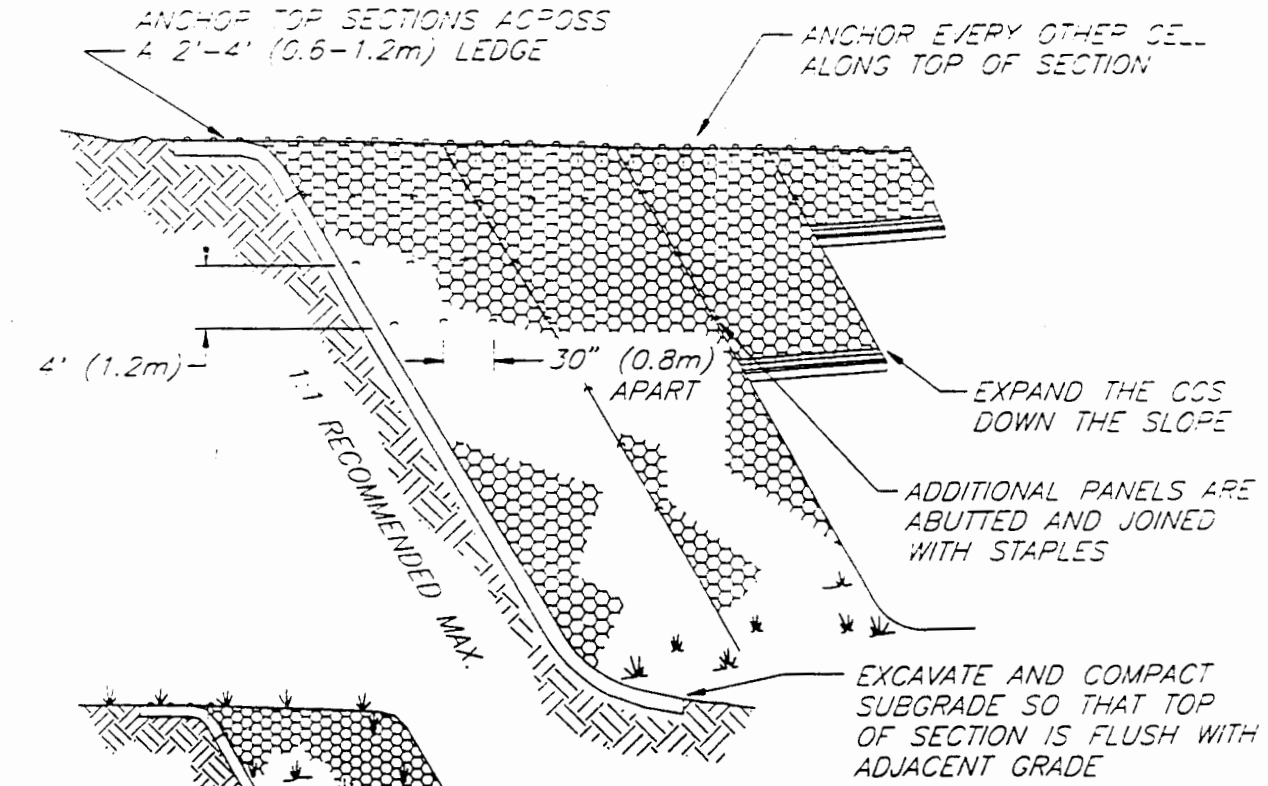

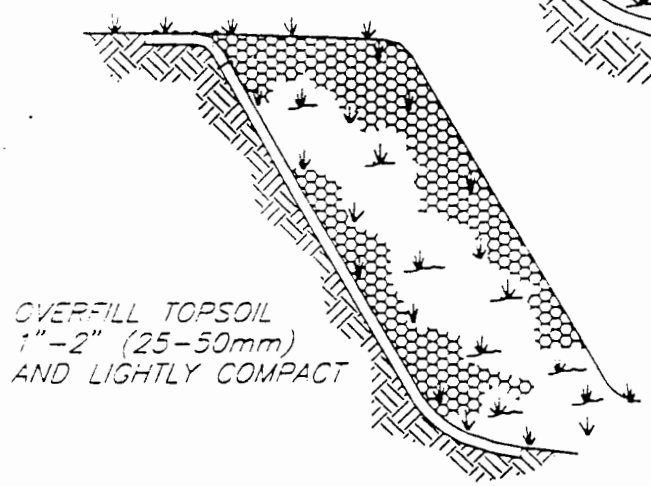

CCS INFILLED WITH TOPSOIL AND VEGETATED WITH GRASS

CCS INFILLED WITH AGGREGATE

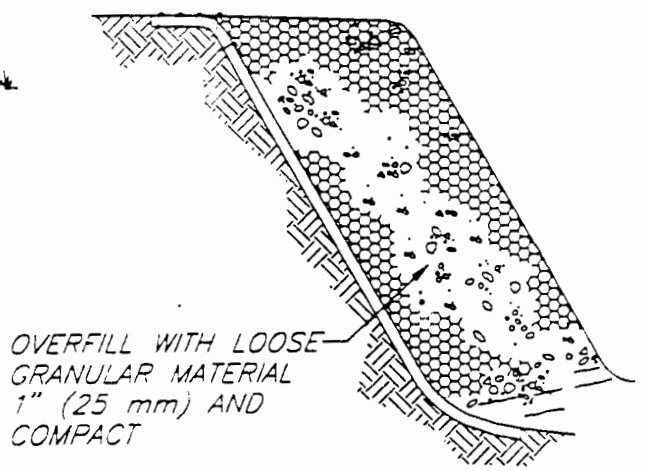

NOTES:
1. SURFACE OF SLOPE SHALL BE LEVELED WITH GULLIES FILLED AND WELL COMPACTED.
2. SHAPE AND COMPACT SUBGRADE SURFACES TO DESIGN ELEVATIONS AND GRADES.
3. THE CELLS SHALL BE ANCHORED SECURELY TO PREVENT DISPLACEMENT AND DEFORMATION OF PANELS WHEN BACKFILLING.
4. INFILL FROM CREST OF THE SLOPE TO TOE TO PREVENT DISPLACEMENT. LIMIT DROP HEIGHT TO 3' (1m).

NOT TO SCALE

DRUM & CONTAINER STORAGE

DESCRIPTION:

Drum contents typically include product and waste oils or chemicals. Container storage includes all other types of containers, up to and including above ground storage tanks with a capacity of 660 gallons. Above ground storage tanks with a capacity greater than 660 gallons are subject to the Laboratory's SPCC Plan requirements. Drums and/or containers that are stored where a leak or spill could enter a storm drain, storm water conveyance, arroyo, floor drain, or reach surface water must have spill control provided.

SPILL CONTROL REQUIREMENTS:

Drums are typically stored horizontally in racks or cradles, or vertically off the ground. Racks should be located within a curbed area. Drums stored vertically should be placed on palletized containment units. Drums and containers stored outdoors should be covered to minimize contact with storm water. Typical covers include tarpaulins, plastic sheeting, roofs, buildings, or other enclosures. Drums and containers should not be stored in standing water. Within drum and container storage areas, spill kits with adequate material to contain minor spills should be available.

Secondary containment for drum and container storage may consist of curbing, temporary or permanent berms, prefabricated pallets, or prefabricated storage sheds. Because curbing is typically much smaller than berms, its use should be limited to small areas where the handling and transferring of materials occurs. For drums or containers used for dispensing or transferring materials, drip pans should be placed under the dispensing area. Secondary containment must be large enough to hold the volume of the largest container or 10 percent of the volume of all containers, whichever is greater. If storage is outdoors, the containment volume must also account for the volume of a 3 inch rainfall event.

Periodically, storm events are of such magnitude or frequency that water accumulations in secondary containment structures must be drained or disposed of. Storm water accumulations in secondary containment structures must meet federal and state water quality standards prior to being released. Contact ESH-18 at 665-4752 for assistance.

PROS:

- Prevents a spill or release from reaching surface water and/or the environment
- Easy to install
- Numerous prefabricated units available
- Minimize the area to be cleaned up in the event of a spill
- Cost of containment is typically cheaper than the cost of cleanup and waste disposal
- With exceptions, most spills or releases within a containment unit are not reportable to external agencies

CONS:

- Initial cost
- May impact drum or container accessibility

INSPECTION & MAINTENANCE:

Inspections should include an examination of storage containers for leaks, corrosion, support or foundation failure, and other forms of deterioration. They should also be used to ensure proper labeling and adequate security measures. Secondary containment structures should be inspected for signs of deterioration or damage. Inspections should encompass both informal observations by operating personnel and formal examinations conducted by supervisory personnel. Repairs should be conducted as soon as practicable.

Include and maintain a suitable records system for inspections and maintenance. Make sure records are complete and detailed. Inspection records should, at a minimum, include the following:

- When inspectic were done,
- Who conducted the inspection,
- What areas were inspected,
- What problems were found,
- What steps were taken to correct problems, and
- Who was notified about any problems found.

For assistance with spill control requirements, secondary containment selection, inspection or maintenance, please contact ESH-18 at 665-4752.

ELECTRICAL TRANSFORMERS

DESCRIPTION:

Electrical transformers are an integral part of an electronic power distribution network and are widely spread throughout the Laboratory. These units vary in size, type of electrical insulating oil used, and in installation setup. The majority of the transformers at the Laboratory are self-contained, pad-mounted units that do not require additional storage requirements.

Dependent upon its location, a transformer has the potential to impact surface water in the event of a leak or rupture. For all electrical transformers at such locations, spill control is required.

SPILL CONTROL REQUIREMENTS:

The likelihood of containment failure of an individual transformer is relatively low. However, due to their large size and extensive use, transformers are considered a potential spill source. Secondary containment should be provided for pad-mounted units in close proximity to a watercourse, storm drain, or other storm water conveyances. Secondary containment may consist of curbing, trenching, temporary or permanent berms, or concrete sumps. Secondary containment should be large enough to hold the volume of the largest transformer.. If storage is outdoors, the containment volume should also account for the volume of a 3 inch rainfall event.

Periodically, storm events are of such magnitude or frequency that water accumulation in secondary containment structures must be drained or disposed of. Storm water accumulations in secondary containment structures must meet federal and state water quality standards prior to being released. Contact ESH-18 at 665-4752 for assistance.

PROS:

- Prevent a spill or release from reaching surface water and/or the environment
- Easy to install
- Minimize the area to be cleaned up in the event of a spill
- Cost of containment is usually cheaper than the cost of cleanup and waste disposal
- With exceptions, most spills or releases within a containment unit are not reportable to external agencies

CONS:

- Initial cost
- Some installations may impact transformer accessibility
- Retrofitting installations may be expensive

INSPECTION & MAINTENANCE:

Inspections should include an examination of transformers for leaks, corrosion, support or foundation failure, condition of pressure relief devices, and other forms of deterioration. They should also be used to ensure proper labeling and adequate security measures. Secondary containment structures should be inspected for signs of deterioration or damage. Inspections should encompass both informal observations by operating personnel and formal examinations conducted by supervisory personnel. Repairs should be conducted as soon as practicable.

Include and maintain a suitable records system for inspections and maintenance. Make sure records are complete and detailed. Inspection records should, at a minimum, include the following:

- When inspections were done,
- Who conducted the inspection,
- What areas were inspected,
- What problems were found,

- What steps were taken to correct problems, and
- Who was notified about any problems found.

For assistance with spill control requirements, secondary containment selection, inspection or maintenance, please contact ESH-18 at 665-4752.

SALVAGE AREAS

DESCRIPTION:

A salvage area is a geographic location used to store scrap equipment and material. These areas are located throughout the Laboratory and are also referred to as "boneyards". Salvage areas may house a variety of discarded equipment as well as waste that includes scrap metal, wire, drums, plastics, and lumber. A variety of spill sources may be located within salvage areas since discarded equipment may still contain lubricants, solvents, antifreeze, or other liquids. Leaching may also occur in waste material exposed to storm water.

SPILL CONTROL REQUIREMENTS:

Since salvage areas vary in size, terrain, and type of materials stored, spill control requirements should be applied on an individual basis. However, the following guidelines should be addressed when developing the spill control requirements:

- Identify potential pollutants and hazards within the area
- As appropriate, remove all fluids from discarded equipment
- As appropriate, provide drip pans, covering devices, or other secondary containment for sources of potential pollutants
- Where practicable, provide covering for salvage area materials to minimize contact with storm water
- Provide appropriate secondary containment for the area

The amounts and types of potential pollutants within salvage areas should be identified to determine secondary containment requirements. At a minimum, the salvage area should be bermed around the perimeter to contain runoff and potential pollutant transport. Other BMPs may also be used to divert runoff to either a treatment facility or a controlled area. Equipment that contains residual fluids should be provided with individual secondary containment. This may include drip pans, covering devices, berms, or curbing. Waste material that poses a threat to water quality due to leaching should be covered or stored within a bermed area.

Periodically, storm events are of such magnitude or frequency that water accumulation in secondary containment structures must be drained or disposed of. Storm water accumulations in secondary containment structures must meet federal and state water quality standards prior to being released. Contact ESH-18 at 665-4752 for assistance.

PROS:

- Prevent a spill or release from reaching surface water and/or the environment
- Easy to install
- Minimize the area to be cleaned up after a spill
- Cost of containment is usually cheaper than the cost of cleanup and waste disposal
- With exceptions, most spills or releases within a containment unit are not reportable to external agencies

CONS:

- Initial cost
- Some installations may impact equipment accessibility
- Retrofitting installations may be expensive

INSPECTION & MAINTENANCE:

Inspections should include an examination of salvage areas leaking equipment, soil stains associated with spills, erosion, and other forms of deterioration or damage. They should also be used to ensure adequate safety and security measures. Secondary containment structures should be inspected for signs of deterioration or damage. Inspections should encompass both informal observations by operating personnel and formal examinations conducted by supervisory personnel. Repairs should be conducted as soon as practicable.

Include and maintain a suitable rec[illegible] system for inspections and maintenance. [illegible]ake sure records are complete and detailed. Inspection records should, at a minimum, include the following:

- When inspections were done,
- Who conducted the inspection,
- What areas were inspected,
- What problems were found,
- What steps were taken to correct problems, and
- Who was notified about any problems found.

For assistance with spill control requirements, secondary containment selection, inspection or maintenance, please contact ESH-18 at 665-4752.

HYDRAULIC EQUIPMENT

DESCRIPTION:

Hydraulic equipment is defined as any equipment that uses hydraulic fluids for its operation or maintenance. Such equipment is used extensively throughout the Laboratory and includes vehicles (forklifts, earth moving equipment, etc.), tools, maintenance equipment, and stationary operational and experimental equipment.

SPILL CONTROL REQUIREMENTS:

When not in use, non-stationary hydraulic equipment should be stored in areas that prevent or minimize contact with storm water. Stationary hydraulic equipment should be protected with covering or secondary containment to prevent contact with storm water. When equipment is mounted in rooms with floor drains that drain to the environment or to an industrial or sanitary sewer, floor drains should be protected. Spill kits or other appropriate material should be available within storage areas. Kits should contain material adequate for a minor spill.

The purpose of secondary containment is to contain spilled material for appropriate cleanup to and prevent contact with storm water outside the contained area. Secondary containment for hydraulic equipment storage areas may consist of curbing, temporary or permanent berms, drip pans, or sorbent material. Drip pans and sorbent material are most often used with stationary, indoor equipment. If storage is located outdoors the secondary containment volume should also account for the volume of a 3-inch rainfall event.

Periodically, storm events are of such magnitude or frequency that water accumulations in secondary containment structures must be drained or disposed of. Storm water accumulations in secondary containment structures must meet federal and state water quality standards prior to being released. Contact ESH-18 at 665-4752 for assistance.

PROS:

- Prevent a spill or release from reaching surface water and/or the environment
- Easy to install
- Minimize the area to be cleaned up after a spill
- Cost of containment is usually cheaper than the cost of cleanup and waste disposal
- With exceptions, most spill releases within a containment unit are not reportable to external agencies

CONS:

- Initial cost
- Some installations may impact equipment accessibility
- Retrofitting installations may be expensive

INSPECTION & MAINTENANCE:

Inspections should include an examination of hydraulic equipment for leaks, corrosion, stains on soil and equipment, and other forms of deterioration or damage. They should also be used to ensure proper labeling and adequate safety and security measures. Secondary containment structures should be inspected for signs of deterioration or damage. Inspections should encompass both informal observations by operating personnel and formal examinations conducted by supervisory personnel. Repairs should be conducted as soon as practicable.

Include and maintain a suitable records system for inspections and maintenance. Make sure records are complete and detailed. Inspection records should, at a minimum, include the following:

- When inspections were done,
- Who conducted the inspection,

- What areas w[illegible]nspected,
- What problems were found,
- What steps were taken to correct problems, and
- Who was notified about any problems found.

For assistance with spill control requirements, secondary containment selection, inspection or maintenance, please contact ESH-18 at 665-4752.

AIR COMPRESSORS

DESCRIPTION:

Air compressors provide pressurized air to varied process equipment. This equipment is used extensively throughout the Laboratory and includes valves; instrumentation; and power tools such as drills, diggers, pile drivers, motors and grinders. Air compressors have receiver tanks that collect and store high-pressure air. As air is compressed, moisture in the air condenses and collects in the receivers. Oil used to lubricate the air compressor leaks into the compressed-air piping and also condenses into the receiver tank. This oil and water mixture must then be drained from the receiver tank and disposed of.

SPILL CONTROL REQUIREMENTS:

Air compressors located outdoors should be covered to minimize contact with storm water. When compressors are mounted indoors in rooms with floor drains that drain to the environment or to an industrial or sanitary sewer, floor drains should be protected.

To contain drain valve discharges and other sources of water and oil condensate, air compressors should be equipped with appropriate secondary containment. This containment may include, but is not limited to, curbing, temporary or permanent berms, drip pans, sorbent material or oil/water separators. Drip pans and sorbent material are most often used with indoor equipment. When located outdoors, the secondary containment volume should also account for the volume of a 3-inch rainfall event.

Storm water and condensate accumulations in secondary containment structures must meet federal and state water quality standards prior to being released. If the condensate is contaminated with oil, the water is a hazardous waste and requires treatment prior to discharge. Contact ESH-18 at 665-4752 for assistance.

To prevent the creation of hazardous waste, use of the Torpedo oil/water separator filter is recommended. This 20 inches long, 2-4 inch diameter filter is constructed from PVC. Within the PVC case is a filter comprised of shredded polypropylene sheets which absorb oil while allowing water to escape. The Torpedo should be attached to the drain valve of the receiver storage tank and to other components in compressed-air systems that collect water condensate. A white polypropylene pad should be placed beneath the discharge outlet of each Torpedo canister to monitor the filter's effectiveness. When the white pad turns yellow from oil in the discharge, the Torpedo requires replacement.

PROS:

- Prevent a spill or release from reaching surface water and/or the environment
- Easy to install
- Minimize the area to be cleaned up in the event of a spill
- Cost of containment is usually cheaper than the cost of cleanup and waste disposal
- With exceptions, most spill releases within a containment unit are not reportable to external agencies
- Torpedo unit prevents the production of hazardous waste.
- Torpedo unit is a relatively inexpensive device
- Spent Torpedo filters are not classified as hazardous waste

CONS:

- Initial cost for some types of secondary containment
- Some installations may impact equipment accessibility
- Retrofitting installations may be expensive (dependent upon type of containment)
- Requires periodic inspection
- Requires periodic replacement

INSPECTION & MAINTENANCE:

Inspections should include an examination of air compressors for leaks, corrosion, stains on soil and equipment, and other forms of deterioration or damage. They should also be used to ensure proper labeling and adequate safety and security measures. Secondary containment structures should be inspected to ensure proper function and to identify signs of deterioration or damage. Inspections should encompass both informal observations by operating personnel and formal examinations conducted by supervisory personnel. Repairs and/or filter replacements should be conducted as soon as practicable.

Include and maintain a suitable records system for inspections and maintenance. Make sure records are complete and detailed. Inspection records should, at a minimum, include the following:

- When inspections were done,
- Who conducted the inspection,
- What areas were inspected,
- What problems were found,
- What steps were taken to correct problems, and
- Who was notified about any problems found.

For assistance with spill control requirements, secondary containment selection, inspection or maintenance, please contact ESH-18 at 665-4752.

APPENDIX A

REFERENCES

Davis, Mackenzie L. and Cornwell, David A. (1991). Introduction to Environmental Engineering, Second Edition, McGraw-Hill, New York, NY, pp 18-19.

Dewberry, Sidney O., P.E, L..S. (1997). "Land Development: Erosion and Sediment Control", Civil Engineering News, Volume 9, Number 11, pp 45-46.

Environmental Protection Agency (1992). "Developing Pollution Prevention Plans and Best Management Practices", Storm Water Management for Industrial Activities, EPA 832-R-92-006, Office of Water, Washington, DC, pp 4-51 - 4-106.

Environmental Protection Agency (1979). NPDES Best Management Practices Guidance Document, EPA 600/9-79-045, Industrial Environmental Research Laboratory, Cincinnati, OH, pp iv, 1.

Kamber Engineering (1990). (Draft) Sediment and Erosion Control. An Inventory of Current Practices, Gaithersburgh, MD, pp III-27, IV-12 - IV-18, IV-24 - IV-26.

Los Alamos National Laboratory (1995). "Los Alamos Develops New Method of Separating Oil and Water", Dateline: Los Alamos, April Issue, pp 5-7.

Salix Applied Earthcare (1994). Erosion Draw 2.0, Redding, CA, pp 14-15, 23-24, 28-32, 39-40, 44-74, 79-88, 96-102, 106-107, 119-121.

Appendix B

BMP Maintenance and Inspection Form

This inspection form is to be used to document all BMP inspections. For active field operations, inspections shall be conducted weekly and following each storm event producing greater than 0.5 inches of precipitation. When site activity has ceased and significant surface runoff is not likely (arid season), inspections shall be conducted at least every other month and following each storm event producing greater than 0.5 inches of precipitation. Inspection records shall be maintained by the owner/operator, and made available for future regulatory inspections.

BMP Inspection and Maintenance Form

Site or Project Name: _____

Inspector's Name: _____ Date: _____

Total Amount of Rainfall within the Last 7 Days (Inches): _____

Complete the table below with the applicable YES, NO, or N/A.*

List BMP type and location within site.	BMP installed correctly?	BMP is effective in controlling:	Storm Water Runoff	Sediment Transport	Erosion	Has damage occurred since the last inspection?	Is maintenance required?	Is there accumulated sediment?	Sediment require removal?	Is there erosion or other potential pollutant sources in the area?
1)										
2)										
4)										
5)										

*** Clarify YES, NO, and N/A observations from the table in the sections below.**

Observations: _____

Required Maintenance: _____

Maintenance to be conducted by: _____

Inspector's Signature: _____

REFERENCE

Limits for Qualitative Detection and Quantitative Determination, Application to Radiochemistry

RSI RESPONSE
PRS 21-024(i) INTERIM ACTION PLAN

Limits for Qualitative Detection and Quantitative Determination

Application to Radiochemistry

Lloyd A. Currie

Analytical Chemistry Division, National Bureau of Standards, Washington, D. C. 20234

The occurrence in the literature of numerous, inconsistent and limited definitions of a detection limit has led to a re-examination of the questions of signal detection and signal extraction in analytical chemistry and nuclear chemistry. Three limiting levels have been defined: L_C—the net signal level (instrument response) above which an *observed* signal may be reliably recognized as "detected"; L_D—the "true" net signal level which may be *a priori* expected to lead to detection; and L_Q—the level at which the measurement precision will be satisfactory for quantitative determination. Exact defining equations as well as series of working formulae are presented both for the general analytical case and for radioactivity. The latter, assumed to be governed by the Poisson distribution, is treated in such a manner that accurate limits may be derived for both short- and long-lived radionuclides either in the presence or absence of interference. The principles are illustrated by simple examples of spectrophotometry and radioactivity, and by a more complicated example of activation analysis in which a choice must be made between alternative nuclear reactions.

IN THE COURSE of research dealing with photonuclear reactions and activation analysis, it became necessary to determine limits of detection of radiochemical procedures, to select among alternative procedures, and to optimize given procedures with respect to certain experimental parameters. Examination of the analytical and radiochemical literature for an appropriate definition of the limit of detection revealed a plethora of mathematical expressions and widely-ranging terminology. One encounters, for example, terms such as lower limit of detection (*1*), detection sensitivity (*2*), sensitivity (*3*), minimum detectable activity (or mass) (*4*, *5*), and limit of guarantee for purity (*6*)—all used with approximately equivalent meanings. The nomenclature problem is compounded, however, because other authors make use of the same, or very similar, terms to refer not to the minimum amount that may be *detected*, but rather, to the minimum amount which may be *determined* with a given relative standard deviation (such as 10%). Still other expressions, such as the "detection limit at the 95% confidence level" are used without explicit mathematical definition, which leaves the meaning rather ambiguous. The various mathematical definitions of detection limit (or its equivalent) range from one to twenty times the standard deviation of the net signal, with the standard deviation of the blank sometimes replacing that of the net signal. Some authors apply two-sided confidence intervals, while others use one-sided intervals. In addition, various "nonstatistical" definitions appear in which the detection limit is equated to the background, 10% of the background, 100 dps (γ-radioactivity), or 1000 dpm (α-, β-,γ-radioactivity). In order to compare some of the more commonly-used definitions, "detection limits" have been calculated for a hypothetical radioactivity experiment in which a long-lived γ-emitter was counted for 10 min with an efficiency of 10%, using a detector having a background of 20 cpm. The results, plotted in increasing order in Figure 1, are obviously unsatisfactory, for they encompass nearly three orders of magnitude!

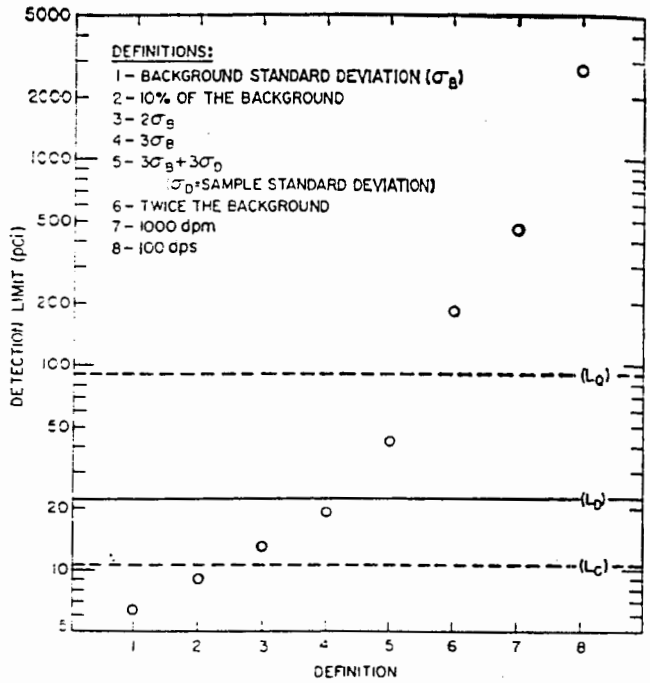

Figure 1. "Ordered" detection limits—literature definitions

The detection limit for a specific radioactivity measurement process is plotted in increasing order, according to commonly-used alternative definitions. L_C, L_D, and L_Q are the critical level, detection limit, and determination limit as derived in the text

In what follows, it will be seen that a complete discussion of the (lower) limits for a measurement process requires the introduction of three specific levels: (1) a "decision limit" at which one may decide whether or not the result of an analysis indicates detection, (2) a "detection limit" at which a given analytical procedure may be relied upon to lead to detection, and (3) a "determination limit" at which a given procedure will be sufficiently precise to yield a satisfactory quantitative estimate. Following definition of the three levels, an attempt will be made to indicate their relations to the various definitions referred to previously, and to give asymptotic expressions which may serve as convenient working definitions.

(1) B. Altshuler and B. Pasternack, *Health Physics*, 9, 293 (1963).
(2) J. Wing and M. A. Wahlgren, ANAL. CHEM., 39, 85 (1967).
(3) R. C. Koch, "Activation Analysis Handbook," Academic Press, New York, N. Y., 1960.
(4) D. E. Watt and D. Ramsden, "High Sensitivity Counting Techniques," Macmillan Co., New York, N. Y., 1964.
(5) "A Manual of Radioactivity Procedures," Handbook 80, National Bureau of Standards, Washington, D. C., 1961.
(6) H. Kaiser, *Z. Anal. Chem.*, **209**, 1 (1965).

The general expressions for detection and determination will be applied to radioactivity by means of the assumption of "Poisson counting statistics." In order to make the concepts generally useful, particularly in the fields of nuclear chemistry and activation analysis, the formulae will be generalized to take into account both long- and short-lived radioactivity, continuously-variable measurement parameters (such as discriminator settings), and radioactivity measurements in the presence of interfering radionuclides.

GENERAL PRINCIPLES

Part of the following discussion appears elsewhere in the literature in somewhat different form, for example, in References (*1* and *6*). The purpose of this section is to bring together the concepts of qualitative and quantitative analysis limits, to clearly show the relationships between an *a posteriori* decision with the related confidence interval and an *a priori* "detectability," and to lay the groundwork for general application to the detection of radioactivity, to be discussed in the following section. Readers who wish fuller explication of the underlying statistical principles and methods—particularly those relating to hypothesis testing, probability distributions, and the estimation of statistical parameters—may find it helpful to consult a basic statistics text, such as Dixon and Massey (*7*).

Definitions and Notation. The process of measurement (experimental procedure) must be completely defined—including the measuring apparatus, method of observation, and sample nature—in order to draw valid conclusions with respect to detection capabilities. In general, the physical quantity of interest (mass, number of atoms, nuclear cross section, etc.) is not directly measurable, but is connected to that which is observed (digital counts, voltmeter deflection, etc.) through a calibration constant. The statistics of *detection* and *determination* apply directly to the observations rather than to the underlying physical quantity, and therefore, the following discussions will deal specifically with the observed (or observable) *signal* (meter reading) and its associated random fluctuations. Statistical conclusions drawn in terms of the net signal may be very simply extended to the related physical quantity by means of the calibration factor.

Symbols will be defined, in general, as they appear in the text, but it may be helpful initially to list the following:

Blank:	μ_B	limiting mean (or "true" mean)
	B	observed value
	σ_B	standard deviation
Gross Signal:	μ_{S+B}	limiting mean
	$(S + B)$	observed value
	σ_{S+B}	standard deviation
Net Signal:	$\mu_S = \mu_{S+B} - \mu_B$	limiting mean
	$S = (S + B) - B$	value derived from an observation pair
	$\sigma_S = (\sigma^2_{S+B} + \sigma^2_B)^{1/2}$	standard deviation

The *blank* is defined as the signal resulting from a sample which is identical, in principle, to the sample of interest, except that the substance sought is absent (or small compared to σ_B). The blank thus includes the effects of interfering species.

Qualitative Analysis. It is vital at the outset to distinguish between two fundamental aspects of the problem of detection: (1) given an observed (net) signal, S, one must decide whether a *real* signal has been detected—*i.e.*, whether $\mu_S >$ given a completely-specified measurement process, c estimate the minimum *true* signal, μ_S, which may be expec to yield a sufficiently large observed signal, S, that it will be *tected*. The first aspect thus relates to the making of a *posteriori*, *binary* (qualitative) *decision* based upon the servation, S, and a definite criterion for detection. Follow such a decision one should establish either an upper limit "not detected") or a confidence interval (if "detected"). second aspect relates to the making of an *a priori estimate* the detection capabilities of a given measurement process.

Let us consider first the *a posteriori* problem. Following experimental observation, one must decide whether or not t which was being sought was, in fact, detected. Forma known as Hypothesis Testing, such a binary, qualitative de sion is subject to two kinds of error: deciding that the s stance is present when it is not (α: error of the first kind), a the converse, failing to decide that it is present when it (β; error of the second kind). The maximum accepta value for α, together with the standard deviation, σ_0, of the signal when $\mu_S = 0$ establish the *Critical Level*, L_C, up which decisions may be based. Operationally, an obser signal, S, must exceed L_C to yield the decision, "detecte Thus, the probability distribution of possible outcomes, wh the true (net) signal is zero, intersects L_C such that the fracti $1 - \alpha$, corresponds to the (correct) decision, "not detected."

Once L_C has been defined, an *a priori Detection Lin* L_D, may be established by specifying L_C, the acceptable lev β, for the error of the second kind, and the standard deviati σ_D, which characterizes the probability distribution of (net) signal when its true value (limiting mean), μ_S, is equal L_D. (Identification of the "true" net signal with the limiti mean assumes the absence of systematic errors. As with m discussions of detection limits, we assume that the entire m surement process may be replicated, so that errors beco random in nature. Systematic errors in a calibration fact connecting the net signal to the desired physical property, not involved at this stage.) L_D is defined so that the pr ability distribution of possible outcomes (when $\mu_S = L_D$) tersects L_C such that the fraction, $1 - \beta$, will correspond to (correct) decision, "detected." The detection limit, defined this manner, is equivalent to the "limit of guarantee for purit of Kaiser (*6*) and the "minimum detectable true activity" Altshuler and Pasternack (*1*). The significance of this par ular form for the definition is that it allows one to determi for a given measurement process, the smallest (true) sig which will be "detected" with a probability $1-\beta$, where th *posteriori* decision mechanism has a built-in protection-lev α, against falsely concluding that a blank observation rep sents a "real" signal. True signals, μ_S, lying between ze and L_D will have larger values for β, and therefore, althou they may be "detected," such detection cannot be consider reliable.

Mathematically, the critical level is given as

$$L_C = k_\alpha \sigma_0$$

and the detection limit,

$$L_D = L_C + k_\beta \sigma_D$$

where k_α and k_β are abscissas of the standardized norm distribution corresponding to probability levels, $1 - \alpha$ a $1 - \beta$. The relationships between L_C, L_D, and the probabil distributions for $\mu_S = 0$ and $\mu_S = L_D$ are depicted in Figu 2, where μ_B represents the limiting mean for the blank d tribution, and μ_{S+B} represents the limiting mean for (observed) signal-plus-blank distribution.

(7) W. J. Dixon and F. J. Massey, Jr., "Introduction to Statistical Analysis," 2nd ed., McGraw-Hill, New York, N. Y., 1957.

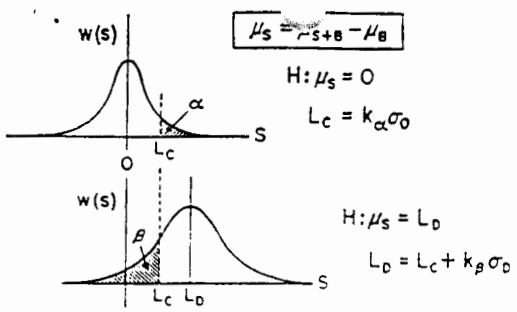

Figure 2. Hypothesis testing

Errors of the first and second kinds

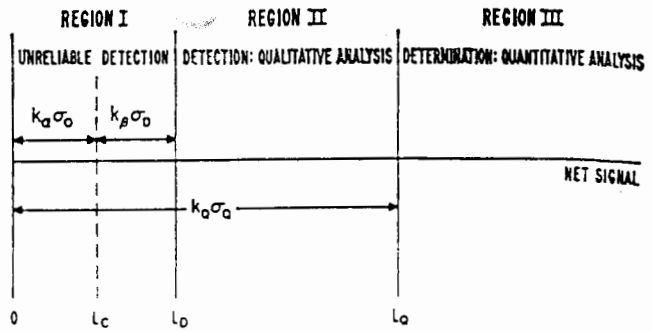

Figure 3. The three principal analytical regions

Confidence Interval and Upper Limit. The preceding discussion implied that one need do no more than compare an experimental result with the decision level in order to draw a qualitative conclusion. In most cases, however, one has available an estimate of the net signal, S, and its standard deviation, σ, may be known. An interval may then be stated for μ_S, based upon $z_{1-\gamma/2}\sigma$ and corresponding to the confidence level, $1 - \gamma$. ($z_{1-\gamma/2}$ is the critical value for the standardized normal distribution such that Prob $\{z \leq z_{1-\gamma/2}\} = 1 - \gamma/2$.) If the net signal and its standard deviation are estimated by means of replication, S is replaced by $\bar{S}$; σ, by $s/\sqrt{n}$; and $z_{1-\gamma/2}\sigma$, by $t_{1-\gamma/2} \cdot s/\sqrt{n}$. (Here, s represents the standard deviation estimate computed from n-observations, and $t_{1-\gamma/2}$ represents the critical value for the Student's $-t$ distribution corresponding to $n - 1$ degrees of freedom.)

(1) If S(or $\bar{S}$) $> L_C$, the decision, "detected," should be reported, and a symmetrical confidence interval should be given: $S \pm z_{1-\gamma/2}\sigma$ (or $\bar{S} \pm t_{1-\gamma/2}s/\sqrt{n}$) where $z_{1-\gamma/2}$ (or $t_{1-\gamma/2}$) refers to a two-sided confidence interval.

(2) If S(or $\bar{S}$) $\leq L_C$, the decision, "not detected," should be reported, and an upper limit should be given: $S + z'_{1-\gamma}\sigma$ (or $\bar{S} + t'_{1-\gamma}s/\sqrt{n}$) where $z'_{1-\gamma}$ (or $t'_{1-\gamma}$) refers to the one-sided confidence interval. (The prime is here used to emphasize *one-sided*.)

Note that in the special case where $\sigma = \sigma_0$, and $z'_{1-\gamma}$ is employed, L_C is numerically equal to $z'_{1-\gamma}\sigma$. This leads to the common, mistaken practice of equating $z'_{1-\gamma}\sigma$ with the "detection limit [(95%) confidence level]." Such a statement is seriously in error because the detection limit cannot be characterized by a single "confidence level," and because it confuses the decision-making quantity ($z'_{1-\gamma}\sigma = L_C$) with L_D, which is used to assess the *a priori* detectability. To the extent that $\sigma \approx \sigma_0$, which may be satisfactory if σ is approximately constant in the region between zero and L_D, the use of $z'_{1-\gamma}\sigma$ (one-sided) to test a given result is exactly equivalent to the use of L_C for this purpose.

A second possible mistake is the confusion of an *a posteriori upper limit* with the *a priori detection limit*. Here again, the two may coincide, if the net signal happens to be L_C, and if $\sigma \approx \sigma_D$ and the one-sided confidence interval is employed. Such a coincidence is not accidental, for the detection limit is, by definition, the maximum upper limit. It must be remembered, however, that, in general, the upper limit depends upon the specific experimental result, S, whereas the detection limit *must be* independent of S, depending, rather, upon the measurement process itself.

Finally, the difference between $z\sigma$ and $t \cdot s/\sqrt{n}$ should be discussed. The use of the latter, which depends upon the variance estimate resulting from n-observations, is clearly "safer" in that it takes into account possible lack of knowledge of σ. On the other hand, if σ in the region between zero and L_D is reasonably well-known (from "theory" or extensive observation), and especially if it is approximately constant, more realistic intervals and upper limits would be set through its use rather than $s/\sqrt{n}$. (Of course, $\sigma/\sqrt{n}$, replaces σ, when $\bar{S}$ is used in place of S). If σ is not approximately known, and in control, in the region below L_D, it is impossible, *in principle*, to estimate a limit of detection. In any case, replicates are most desirable, if possible, and the estimate, $s/\sqrt{n}$, should be consistent with $\sigma/\sqrt{n}$, if the measurement process remains "in control." [An exactly equivalent, and somewhat preferable, scheme for treating replication, would include the number of observations, n, as a part of the definition of the measurement process. The standard deviation of the mean of n-observations would then be simply σ (for the over-all process) rather than $\sigma/\sqrt{n}$. The use of $s/\sqrt{n}$ to test control rather than to set limits would be achieved by routine evaluation of s^2/σ^2, which should be within limits set by the distribution of χ^2/ν.]

Quantitative Analysis. Neither a binary decision, based upon L_C, nor an upper limit, nor a wide confidence interval may be considered satisfactory for quantitative analysis. One wishes instead a result which is satisfactorily close to the true value (limiting mean). Therefore, for $\mu_S = L_Q$, the *Determination Limit*, the standard deviation, σ_Q, must be but a small fraction of the true value. Such a definition is similar to that used by Adams, Passmore, and Campbell who defined a "minimum working concentration" as that for which the relative standard deviation was 10% (*8*).

The *Determination Limit* so defined is,

$$L_Q = k_Q \sigma_Q \tag{3}$$

where L_Q is the true value of the net signal, μ_S, having a standard deviation, σ_Q, and $1/k_Q$ is the requisite relative standard deviation.

By way of summary, the levels L_C, L_D, and L_Q are determined entirely by the error-structure of the measurement process, the risks, α and β, and the maximum acceptable relative standard deviation for quantitative analysis. L_C is used to test an experimental result, whereas L_D and L_Q refer to the capabilities of measurement process itself. The relations among the three levels and their significance in physical or chemical analysis appear in Figure 3.

Special Cases (numerical results). In order to make the significance of Equations 1–3 clearer, a number of specific choices for α, β, and the various σ's may be helpful.

(8) P. B. Adams, W. O. Passmore, and D. E. Campbell, paper No. 14, "Symposium on Trace Characterization—Chemical and Physical," National Bureau of Standards (Oct. 1966).

N III

VITATIVE ANALYSIS

GNAL

gions

f knowledge
en zero and
xtensive ob-
istant, more
through its
ices σ, when
known, and
in principle,
plicates are
n, should be
remains "in
t preferable,
e number of
neasurement
f n-observa-
ocess) rather
ther than to
on $^2/\sigma^2$,
ion χ^2/ν.]
ision, based
nce interval
alysis. One
close to
$= L_Q$, the
must be but
on is similar
who defined
r which the

(3)

ving a stan-
ive standard

$_Q$ are deter-
neasurement
a acceptable
nalysis. L_C
L_D and L_Q
itself. The
nificance in

o make the
of specific
al.

ell, paper No.
hemical and
6).

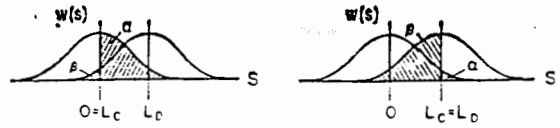

Figure 4. Extreme limits for L_c

The left-hand diagram indicates coincidence of L_C with zero; hence $\alpha = 0.50$. The right-hand diagram indicates coincidence of L_C with L_D; hence $\beta = 0.50$

1. $\alpha = \beta$; σ = constant. If the risks of making both kinds of mistake are set equal, then $k_\alpha = k_\beta = k$, and

$$L_C = k\sigma_0 \tag{4a}$$

$$L_D = L_C + k\sigma_D = k(\sigma_0 + \sigma_D) \tag{4b}$$

If, in addition, σ is approximately constant,

$$L_C = k\sigma \tag{5a}$$

$$L_D = 2k\sigma = 2L_C \tag{5b}$$

In this case, the detection limit is just twice the critical level—a situation which obtains in the large majority of cases. Assuming that risks of 5% are acceptable, and that the random errors are normally-distributed, the constant, k, takes on the value, 1.645. The standard deviation of the net signal is derived from

$$\sigma^2 = \sigma^2_{S+B} + \sigma_B^2 \tag{6}$$

where σ^2_{S+B} represents the variance of the "gross" (directly-observed) signal and σ_B^2 represents the variance of the blank. If the standard deviation is approximately independent of the signal level, then

$$\sigma^2 = \sigma^2_{S+B} + \sigma_B^2 = 2\,\sigma_B^2 \tag{7}$$

Making the additional requirement that $k_Q = 10$—*i.e.*, that $\sigma_Q \approx 10\%$—we find that

$$L_Q = k_Q\sigma_Q = 10\sigma \tag{8}$$

The above results are summarized in Table I, which may be used to provide convenient "working" formulae for the large majority of problems. The first row is derived assuming equivalent observations of sample (plus blank) and blank, while the second row, which differs by $1/\sqrt{2}$, assumes that a long history of observations of the blank make the second term on the right in Equation 6 negligible.

2. Fixed L_D; varying (α,β). For a given measurement process specification of α fixes L_C. Similarly, specification of L_C or α together with the specification of β fixes L_D. For a given L_D, however, an infinite set of combinations (α,β) exist depending upon the location of L_C. For example, the value for L_D resulting from the above choice, $\alpha = \beta = 0.05$, would also obtain for all choices of L_C between zero and L_D. The extremes, $L_C = 0$ and $L_C = L_D$ (still assuming $\sigma_D = \sigma_0$), correspond to $(\alpha,\beta) = (0.5, 0.0005)$ and $(\alpha,\beta) = (0.0005, 0.5)$, respectively (see Figure 4).

3. $\mu_B = 0$. Because the above equations do not involve the magnitude of the background, *per se*, but only its standard deviation, there is no change. Such a state of affairs is reasonable, for a background of any magnitude can be set equal to zero simply by a change of scale; such a change cannot be expected to alter the detection limit.

4. $\sigma_B = 0$. In this case, the effect is profound. L_C is necessarily zero, and any net positive signal definitely indicates detection ($\alpha = 0$). $L_D = k_\beta\sigma_D$, and $L_Q = k_Q\sigma_Q$, where σ_D and σ_Q now depend upon the net signal only.

Table I. "Working" Expressions for L_C, L_D, L_Q.[a]

	L_C	L_D	L_Q
Paired observations	$2.33\,\sigma_B$	$4.65\,\sigma_B$	$14.1\,\sigma_B$
"Well-known" blank	$1.64\,\sigma_B$	$3.29\,\sigma_B$	$10\,\sigma_B$

[a] Assumptions: $\alpha = \beta = 0.05$; $k_Q = 10$; $\sigma = \sigma_0$ = const.

5. $\sigma^2_{S+B} = \mu_S + \mu_B$. Poisson statistics—to be discussed below under radioactivity. The standard deviation may not be assumed constant; it increases with signal level.

6. α or $\beta = 0.50$. If one is willing to tolerate a 50% error in wrongly identifying a false signal or in missing a true signal either L_C becomes zero or $L_C = L_D$. That is, under these circumstances, the pair of levels, L_C and L_D, give the appearance of just a single level. This is illustrated in Figure 4. If both risks are set at 50%, then both levels coincide with zero. Therefore, any positive, net signal will be recognized as "real," and any nonzero "true" level in a sample will be "detectable." (That is, the detection limit is in fact zero!) However, such fantastic detection capabilities must be viewed with caution for regardless of whether $\mu_S = 0$, or if it is just above the limit of detection, the conclusion will be wrong 50% of the time, and therefore the experiment could be performed equally well by the flipping of a coin.

RADIOACTIVITY

Signal Detection. Application of the foregoing considerations to radioactivity involves the fact that the gross "signal" and "blank" observations are in digital form which in most cases may be assumed to be governed by the Poisson distribution. (Extra, non-Poisson variability of the blank is discussed below, under "Interference and Background.") If the numbers of counts are sufficiently large, the distributions are approximately Normal, and we may therefore readily estimate the variance of the net signal and establish approximate levels of confidence and significance. Under such circumstances, the variance of the net signal (number of counts) is given by

$$\sigma^2 = \sigma^2_{S+B} + \sigma^2_{\bar{B}} = (\mu_S + \mu_B) + \frac{\mu_B}{n} \tag{9}$$

($\bar{B}$ is assumed to have been derived from n-observations of the blank.) Note that σ is not independent of signal level as was assumed in Table I. Its variation over the range $\mu_s = 0$ to $\mu_s = L_D$ is trivial if μ_B is large, however. If $\mu_B = 10$ counts, $\sigma_D/\sigma_0 \approx 1.5$ (n-large). In the limit $\mu_B = 0$, $\sigma_D/\sigma_0 = \infty$, because $\sigma_0 = 0$. This requirement, that $\sigma_0 = 0$ and $L_C = 0$ if $\mu_B = 0$, is peculiar to the Poisson distribution and represents one of the principal differences between the "general" case and that of radioactive decay.

Remembering that σ_0^2 is the variance when $\mu_S = 0$, and that σ_D^2 is the variance when $\mu_S = L_D$, we obtain

$$L_C = k_\alpha\,\sigma_0 = k_\alpha\,(\mu_B + \sigma^2_{\bar{B}})^{1/2} \tag{10}$$

$$L_D = L_C + k_\beta\sigma_D = L_C + k_\beta\,(L_D + \sigma_0^2)^{1/2} \tag{11}$$

Solving Equations 10 and 11 for L_D, leads to

$$L_D = L_C + \frac{k_\beta^2}{2}\left\{1 + \left[1 + \frac{4L_C}{k_\beta^2} + \frac{4L_C^2}{k_\alpha^2 k_\beta^2}\right]^{1/2}\right\} \tag{12}$$

Table II. "Working" Expressions for Radioactivity

	L_C (counts)[a]	L_D (counts)	L_Q (counts)
Paired observations			
($\sigma_B^2 = \mu_B$)	$2.33\sqrt{\mu_B}$	$2.71 + 4.65\sqrt{\mu_B}$	$50\left\{1 + \left[1 + \frac{\mu_B}{12.5}\right]^{1/2}\right\}$
"Well-known" blank			
($\sigma_B^2 = 0$)	$1.64\sqrt{\mu_B}$	$2.71 + 3.29\sqrt{\mu_B}$	$50\left\{1 + \left[1 + \frac{\mu_B}{25}\right]^{1/2}\right\}$
Zero blank ($\mu_B = 0$)	0	2.71	100
Asymptotic ratio[b,c] (S/σ_B)	1.64	3.29	10

[a] Dimensions (counts) apply to the first three rows only.
[b] "Well-known" blank case; for paired observations, multiply by $\sqrt{2}$.
[c] Correct to within 10% if $\mu_B \geq 0$, 67, 2500 counts, respectively, for each of the three columns. For paired observations, $\mu_B \geq 0$, 34, 1250 counts, respectively.

Estimates of the mean value and the standard deviation of the blank thus allow the calculation of L_C and L_D for selected values of α and β by means of Equations 10 and 12. A considerable simplication takes place if $k_\alpha = k_\beta = k$. Equation 12 then reduces to the form,

$$L_D = k^2 + 2L_C \tag{13}$$

Equation 13 differs by the term, k^2, from that arising in the previous discussion in which the "reasonable" assumption was made that $\sigma^2 \approx$ const. Thus, even if $\sigma_B = 0 = L_C$, we see that L_D may never be equal to zero. The determination limit, L_Q, is given by

$$L_Q = k_Q\sigma_Q = k_Q\,(L_Q + \sigma_0^2)^{1/2} \tag{14}$$

which may be solved to yield

$$L_Q = \frac{k_Q^2}{2}\left\{1 + \left[1 + \frac{4\sigma_0^2}{k_Q^2}\right]^{1/2}\right\} \tag{15}$$

Again, convenient "working" expressions may be derived from Equations 9, 13, and 15 for measurements in which $\alpha = \beta = 0.05$, and $k_Q = 10$. These expressions are given in Table II.

Especially simple "working" expressions may be stated when the number of background counts, μ_B, is "large." Such simplified expressions, presented in terms of the ratio of the net signal to the standard deviation of the background ("signal/noise"), appear in the bottom row of Table II. Note the correspondence of the asymptotic ratios to the "working" expressions in Table I.

The occurrence of nonintegral values for L_D and L_Q in Table II is not at all inconsistent with integral, Poisson distributions, because L_D and L_Q represent the means of such distributions, and such means may take on any positive value, integral or nonintegral. L_C, on the other hand, represents a decision level against which an integral, experimental result must be compared. An exact, Poisson treatment would thus lead to an integer for L_C, but only discrete values for α would then be possible. The magnitude of the error in significance level, due to the assumption of normality, is worth considering with respect to the data in Table II. For example, L_D is there given as 2.71 counts for the zero blank case, and this is supposed to correspond to $\beta = 0.05$. Examination of the correct, Poisson distribution shows that the probability of observing $S = L_C = 0$ counts when $\mu_S = L_D = 2.71$ is approximately 0.07 instead of the desired 0.05.

Interference and Background. Thus far, μ_B and σ_B have been used to refer to the "blank." In observations of radioactivity one frequently approaches the situation where the blank is due only to background radiation. When such is not the case, it may be desirable to decompose the blank into its separate components: background and interfering activities. Using b to denote background and I to denote interference, the above quantities take the form,

$$\mu_B = \mu_b + \mu_I \tag{16}$$

$$\sigma_B^2 = \sigma_b^2 + \sigma_I^2 \tag{17}$$

If the variances, σ_b^2 and σ_I^2, arise from the Poisson distribution, they will be equal to the respective mean values, μ_b and μ_I; if the interference has instead a fixed relative standard deviation, f_I, its variance will be equal to $(f_I\mu_I)^2$. The distinction between these two situations may sometimes be quite critical in fixing the detection limit. Its significance in choosing between alternative detection systems will be discussed in a separate publication. Note that the situation may also come about where $\mu_I = 0$, but σ_I^2 corresponds to an extra (non-Poisson) component of variance. Such extra variance, which may arise from cosmic ray variations or instrument instability, must be included in the estimate of σ_0^2 and, hence, in the estimates of L_C, L_D, and L_Q.

Limits for the Related Physical Quantities. In order to make the decision, "detected" or "not detected," one needs to know only the net number of counts resulting from a specific experiment, and the critical number of counts, L_C. Limits for qualitative and quantitative analysis and upper limits or confidence intervals for actual results, however, are of value only when expressed in terms of the physical quantity of interest, such as grams or atoms. The connection is simply made by means of the relevant calibration factor. For example, the detection limit, L_D, may be related to the minimum detectable mass, m_D(g), by means of Equation 18,

$$L_D = Km_D \tag{18}$$

where K represents an overall calibration factor relating the detector response to the mass present. Thus, K would be equal to unity for direct (ideal) weighing; it would be equal to the absorbance per gram for spectrophotometry if the

sample cross-section is fixed; it would be equal to the number of counts per gram for activation analysis.

Although the constant, K, is not involved directly in the statistics of the detection limit, its role is fundamental, and it must be included when choosing between experimental procedures or in optimizing a given procedure. For the particular case of nuclear activation,

$$K = P(\Sigma)S(\lambda,\tau)T(\lambda,t,\Delta t)\epsilon(x) \tag{19}$$

where P = production rate (nuclei/g-sec)

S = saturation factor = $1 - e^{-\lambda\tau}$

T = $(e^{-\lambda t}/\lambda)\ (1 - e^{-\lambda\Delta t})$ (seconds) (a generalized counting interval relating initial counting rate to observed number of counts).

ϵ = detection efficiency (counts/disintegration) (chemical yield may be incorporated in ϵ, when appropriate).

Σ and λ are characteristic of the nuclear reaction being utilized; they represent the reaction cross section (cm^2) and product decay constant (sec^{-1}), respectively. τ, t, and Δt are the times (sec) for activation, delay (decay), and counting, respectively. x represents a variable detection parameter, such as absorber thickness, discriminator setting, etc. A similar expression may be written for the mean number of counts from an interfering radionuclide:

$$\mu_I = m_I\ [P(\Sigma_I)S(\lambda_I,\tau)T(\lambda_I,t,\Delta t)\epsilon_I(x)] \tag{20}$$

the mean number of background counts is given by

$$\mu_b = b(x)\Delta t \tag{21}$$

where $b(x)$ is the background rate, which also may depend upon the detection parameter, x. The preceding expressions may be incorporated into a single equation for the mass-detection limit:

$$m_D = \frac{k^2 + 2k\ [\mu_b + \sigma_b^2 + \mu_I + (f_I\mu_I)^2]^{1/2}}{P(\Sigma)S(\lambda,\tau)T(\lambda,t,\Delta t)\epsilon(x)} \tag{22}$$

Equation 22, although somewhat complicated, allows one to calculate the minimum detectable mass for a given activation-detection procedure, where there are no *a priori* restrictions placed upon the half-life of the product radionuclide (long-*vs.* short-lived) and where interference may be considered in a completely general and unrestricted manner. In order to include more than one interfering radionuclide, one simply replaces μ_I by $\sum\mu_I$ and $(f_I\mu_I)^2$ by $\sum(f_I\mu_I)^2$. If the variances of background and interference are governed by the Poisson distribution and if they are determined by "equivalent" observations, the radical in the numerator of Equation 22 takes the simpler form: $(2\mu_b + 2\mu_I)^{1/2}$. If the variances are negligible, the radical becomes $(\mu_b + \mu_I)^{1/2}$.

Systematic errors in calibration factors are not a part of the present discussion. Such errors can in no way affect the critical level, L_C, because L_C refers only to the instrumental response at which the decision is made—"detected" or "not detected." All physical quantities deduced from L_D, L_Q, or an "observed" net signal, however, contain uncertainties due to calibration factor errors. Because the calibration factor error is here considered systematic, while the observation (response) error is random, they cannot be simply compounded. As a result, the corresponding physical quantities must be characterized by error limit intervals, the upper limits of which might be used to provide "safe" estimates for m_D and m_Q.

Relative dete[illegible]on capability has frequently been evaluat in terms of the "figure of merit." Figure of merit, in t limit of very small (net) sample counts, is usually defined μ_S^2/μ_b; this expression is approximately the reciprocal of t relative variance of the net signal. Use of the above expr sion for comparing detector sensitivities generally involv the replacement of μ_S by the product of the sample disin gration rate and the detection efficiency, and various detect are then compared by examining the respective ratios, $\epsilon^2/$ Such a procedure suffers from a number of limitations, wh compared to the use of Equation 22 (or the analogous equ tions for m_C and m_Q). The limitations include: (1) no lowance is made for short-lived radioactivity; (2) int ference—especially "decaying" interference—is not co sidered; (3) the formula may not be applied to the comparis of critical levels or detection limits, because α- and β- ty errors have not been included; (4) the approximation, $\ll \mu_b$, is built into the formula. This last factor, whi would lead one to conclude that one particular detecti system is better than another, may lead to the wrong co clusion for m_D or m_Q. That is, the exact equations, of t form of Equation 22, can lead to the conclusion that the o detection system has the lower limit of detection, but th the other has the lower limit of determination.

ILLUSTRATIONS

In order to make clear the application of the precedi formulae, three examples will be given, one selected ar trarily from among "standard" methods of chemical analys another dealing with the simple detection of radioactivi and a third dealing with a more complex problem in activati analysis.

(1) Spectrophotometry

The fundamental relation governing the absorption of lig by matter may be written,

$$A = \mu cl + A_0 \tag{2}$$

where A and A_0 are the absorbances for samples having co centrations, c and 0, respectively; l is the cell path lengt μ is the absorptivity. In order to relate the problem to t preceding discussion, we make the following identifications.

(a) A_0 = blank, μ_B, which is here set equal to zero, b adjustment of the transmittance reading to 100% using "blank" sample.

(b) σ_B = standard deviation of the blank absorbance $\neq$

(c) A = net signal, μ_S, which here equals the gross signa because A_0 has been set equal to zero.

(d) $K = \mu l$, the calibration factor.

(e) σ_S = standard deviation of the net signal, A.

Experimental observations on the spectrophotometric d termination of thorium using thorin, yielded: σ_B = 0.002 and K = 58.2 l/g (9). The sample standard deviation, σ was observed to be relatively constant and equal to σ_B, ov the concentration range studied. A particular sample a alyzed was observed to give a response (absorbance) of 0.006 Using these data and expressions for paired observations fro Table I, we find the following:

Decision: $L_C = 2.33\ \sigma_B = 0.0047$. Thus, the observed r sponse, 0.0060, leads to the decision, "detected."

(9) L. A. Currie, G. M. France III, and P. A. Mullen, Nation Bureau of Standards, unpublished data (1964).

Table III. Detection of Potassium in Sodium

Reaction	Target nuclide[a]	Product[b]	Detection limit (g) Interference-free	Detection limit (g) $m(Na) = 1$ g
(n,γ)	^{41}K (6.9%) ^{23}Na (100%)	^{42}K (12.4 hr) ^{24}Na (15 hr)	1.3×10^{-10}	0.26
(γ,n)	^{39}K (93.1%) ^{23}Na (100%)	^{38}K (7.7 min) ^{22}Na (2.6 yr)	7.7×10^{-10}	6.0×10^{-7}

[a] Isotopic abundance listed in parentheses.
[b] Half-life listed in parentheses

Confidence Interval: Because the signal is considered detected, we may set a confidence interval, rather than an upper limit. The absorbance interval for the signal at the 95% level of confidence is 0.0060 ± 1.96 (0.0020). The corresponding thorium concentration interval, assuming negligible error in the calibration constant, is 36 to 170 μg/l, and the estimate of the mean is 103 μg/l.

Detection Limit: $L_D = 4.65\ \sigma_B = 0.0093$. Thus, the minimum detectable concentration (that which will give a signal exceeding L_C, 95% of the time) is equal to 160 μg/l.

Determination Limit: $L_Q = 14.1\ \sigma_B = 0.0282$. Therefore, in order to obtain a precision (relative standard deviation) as small as 10%, one must have a thorium concentration of 480 μg/l.

(2) Radioactivity

Let us next consider the detection of the 7.7-min positron-emitter, ^{38}K. We shall assume that the radionuclide is detected by means of the 0.51-MeV positron annihilation quanta using a sodium iodide crystal having a background of 20 cpm and a detection efficiency (for ^{38}K) of 32%. Our aim will be to calculate the various limits in terms of activity (disintegration rate) instead of mass. As will be shown in a separate publication, the counting interval, Δt, which leads to the minimum detection limit is approximately twice the half-life; we shall therefore take $\Delta t = 15.4$ min. Equation 18 here takes the form, $L_D = Ka_D$, where a_D represents the minimum detectable activity, and $K = \epsilon T$. Because the delay time, t, is not involved in the present example, $T = (1-e^{-\lambda\Delta t})/\lambda$. (For long-lived species, T, the "effective counting interval," reduces to Δt, the physical counting interval.) Using the fact that $\mu_B = 20$ cpm × 15.4 min, one may calculate L_C, L_D, and L_Q directly from the formulae for paired observations given in the first row of Table II. The above value for ϵ may then be combined with $T = 8.33$ min, in order to determine a_C, a_D, and a_Q. The results are given below:

$$a_C = 15.3 \text{ dpm}$$

$$a_D = 31.6 \text{ dpm}$$

$$a_Q = 114 \text{ dpm}$$

Let us suppose than an observation of sample plus background gives a total of 340 counts. The net signal would then be 32 counts (assuming that the background observation yielded 308 counts), and its estimated standard deviation would be 25.4 counts. L_C, as calculated from Table II, is equal to 40.8 counts, and therefore such an observation would lead to the conclusion, "not detected." (The comparison might be made on the basis of the corresponding disintegration rates, 12 dpm-observed, and 15.3 dpm = a_C, but the conversion from counts to dpm is unnecessary for making the decision.) The upper limit (95% confidence level) for the net signal is equal to 32 + 1.645 (25.4) = 73.8 counts; this is equivalent to a disintegration rate of 27.6 dpm.

The effect of half-life on the above limits is notable. For example, if ^{38}K had a very long half-life, $T \rightarrow 15.4$ min and a_D would be reduced to 17.1 dpm. A long half-life, of course, would make useful a longer counting interval. If the interval were 10^3 min, for example, the minimum detectable activity would be further reduced to 2.06 dpm. Thus, when half-life is the only variable, one can detect considerably smaller activities for long-lived species than for those which are short-lived.

(3) Activation analysis

The foregoing principles will next be applied to a somewhat more complex example in which one must consider both the effects of various product half-lives and the effects of interference arising from alternative nuclear projectiles. The problem to be examined is whether reactor neutrons or linac bremsstrahlung are better for the detection of potassium. The minimum detectable mass will be estimated for the interference-free situation, and also for that in which the potassium is accompanied by 1 gram of sodium. Details of the calculation will not be presented here, but only the input data and the results. The results were calculated directly from Equation 22. The input assumptions follow:

(a) thermal neutron flux–10^{13} (n/cm^2-sec).
(b) bremsstrahlung flux distribution–10^{14}/E (quanta/MeV-min-cm^2) (electron beam energy well above the giant resonance).
(c) irradiation time and counting time–10^3 min or two half-lives (potassium product) whichever is less.
(d) delay time–negligible.
(e) nuclear cross sections–taken from the literature.
(f) interference correction accuracy, f_I–1%.
(g) detection– paired observations, sodium–iodide counting of the positron annihilation peak (bremsstrahlung-produced activity) or the 1.51 MeV ^{42}K γ-peak (neutron-produced activity). Interferences due to sodium activities were estimated from the respective gamma ray spectra. The backgrounds and detection efficiencies are as follows:

Reaction	Background	Efficiency (γ-efficiency × branching) K	Efficiency (γ-efficiency × branching) Na
(n,γ)	12 cpm	0.014	0.0097
(γ,n)	20 cpm	0.32	0.29

Minimum detectable masses of potassium are given in Table III. Note that the minimum detectable activity calculated for ^{38}K in the preceding example applies also to the present example; the minimum detectable mass differs only by the production factor, $P(\Sigma)$, which here equals 4.11×10^{10} dpm/g for ^{38}K.

The results given in Table II indicate that both a reactor and an electron linear accelerator provide excellent detection capabilities for potassium in the absence of interference, the reactor being somewhat better. The importance of Equation 22 for detection limit estimation in the presence of interference, however, becomes quite clear upon examination of the last column of Table III. Here, the detection limit by bremsstrahlung irradiation has become about one thousand times poorer, and thermal neutron activation has become practically useless.

ACKNOWLEDGMENT

Helpful discussions have taken place with a number of m colleagues, in particular: J. R. DeVoe, J. M. Cameron, H. I Ku, and K. F. J. Heinrich.

RECEIVED for review September 21, 1967. Accepted Decem ber 15, 1967. The paper was presented in part at the Eigh Eastern Analytical Symposium held in New York, Novemb 1966.

Graphical Technique for Estimating Activity Levels Produced in Thermal- and Fission-Neutron Irradiation

Jorma T. Routti

Lawrence Radiation Laboratory, University of California, Berkeley, Calif.

We describe a rapid and flexible graphical method for estimating the activity induced in neutron irradiations. This method, applicable to several activation problems, is applied here to thermal- and fission-neutron irradiations, which are widely used in activation analysis with reactors. The calculated saturation activities of the products of most activation reactions are represented on two activation charts. We develop a graphical technique, using a transparent overlay, to obtain corrections for the saturation, decay, and counting factors. The principal advantage of this method is that the corrections due to these factors can be applied to any saturation activity of the chart, which already contains all the nuclear information required for estimation of induced radioactivity. Most simple activity calculations can be performed quickly and accurately; the technique is also useful in estimating the best irradiation and decay times to enhance selected activities in composite samples. We give the numerical values for the construction of charts of saturation activities for thermal- and fission-neutron irradiation and for the overlay. Calculation techniques are explained and clarified with typical examples.

THE CALCULATION of induced radioactivity is required in many activation problems. Generally, the same mathematical formalism is applied, with different values of nuclear constants and time parameters. The search for nuclear constants and the solution of equations for composite samples is often time-consuming. We here develop a graphical method for representing nuclear data and solving activation equations; this method can be successfully applied to several activation problems, flux monitoring, and radioisotope production with reactors and accelerators. (The two activation charts and the transparent overlay are available as a courtesy from General Radioisotope Processing Corp., 3120 Crow Canyon Road, San Ramon, Calif. 94583.) The specific applications to thermal- and fission-neutron activation have been chosen because of their wide and frequent use in activation analysis with reactors.

Several nomographs for calculating induced radioactivity have been published (*1–3*). To use most of these, it is first necessary to find the nuclear parameters in the literatur Concise summaries of sensitivities for thermal-neutron activa tion have also been published (*4, 5*). These generally apply to selected counting and irradiation conditions.

The techniques described here combine, in compact form the essential nuclear data with a quick and flexible graphica calculation method. The various factors appearing in the activity equation, including the saturation, decay, and counting-time corrections, can easily be determined. Also, qualitative information of optimal irradiation and decay times which are often desired in activation analysis, can be obtained graphically rather than by using numerical computer techniques (*6*).

GRAPHICAL METHOD FOR COMPUTATION

The Activation Equation. In calculating induced radioactivity, we assume that the irradiated sample is so smal that it produces no significant attenuation of the flux of incident particles. The total disintegration rate of a radioisotope produced by irradiation of an element of natura isotopic composition in a constant flux is then given by

$$A = \frac{mfN_0\phi\sigma}{100\ \mathrm{M}}[(1 - \exp(-\ln 2 \times t_i/T_{1/2})]\exp(-\ln 2 \times t_d/T_{1/2}) = A_{sat}SD = N^* \ln 2/T_{1/2} \quad (1)$$

where m is the mass of the irradiated element, f is the isotopic abundance (%) of the isotope that undergoes the reaction N_0 is Avogadro's number, ϕ is neutron flux, σ is the cross section, M is the atomic weight of the irradiated element $T_{1/2}$ is the half-life of the induced activity, t_i is the irradiation time, t_d is the decay time (between the end of irradiation and the beginning of counting), A_{sat} is $\frac{mfN_0\phi\sigma}{100\ \mathrm{M}}$, the saturation activity, S is $[(1 - \exp(-\ln 2 \times t_i/T_{1/2})]$, the saturation factor D is $\exp(-\ln 2 \times t_d/T_{1/2})$, the decay factor, and N^* is the number of decaying nuclei.

(1) Philip A. Benson and Chester E. Gleit, *Nucleonics*, **21**, No. 8 148 (1963).
(2) E. Ricci, *Nucleonics*, **22**, No. 8, 105 (1964).
(3) Edward C. Freiling, *Nucleonics*, **14**, No. 8, 65 (1956).
(4) W. Wayne Meinke, Sensitivity Charts for Neutron Activation Analysis, ANAL. CHEM., 792 (1959).
(5) Russell B. Mesler, *Nucleonics*, **18**, No. 1, 73 (1960).
(6) Thomas L. Isenhour and George H. Morrison, ANAL. CHEM. **36**, 1089 (1964).

DRAFT

Waste Characterization Strategy Form
for
PRS 21-024(i)

RSI RESPONSE
PRS 21-024(i) INTERIM ACTION PLAN

Draft

WASTE CHARACTERIZATION STRATEGY FORM

PRS Number 21-024(i)

Title: Septic Tank and Outfall

All Waste Types or Wastestreams: 1) Contaminated soil 2) Tank and Sludge; 3) PPE/plastic/sampling equipment

Completed By: Greg Bayhurst Date: 26 July 1998
WMC: Greg Bayhurst
Type of Activity (site investigation, EC, etc.): Interim Action

Description of the Activity

Interim action activities at Potential Release Site (PRS) 21-024(i) involve (1) removing a concrete septic tank and the associated contents (sludge), (2) removing portions of the inlet and outlet lines, and (3) removing soil/tuff at the associated outfall. Wastes from these activities will include the septic tank, sludge, inlet and outlet lines, outfall soil/sediment, and personal protective equipment (PPE) and miscellaneous solid waste.

Tank, Sludge, and Pipe Removal

Results from samples collected during prior investigations identified elevated radioactivity, organic compounds, PCBs, and metals in the sludge remaining in the septic tank. The sludge will be removed from the tank, containerized in 55 gal drums and transported to TA-54 for storage and or disposal. After sludge clean out, the tank will be removed, demolished, and transported to TA-54 for storage and or disposal. After tank removal, the underlying area will be screened with appropriate field equipment (radioactivity, organic vapors) to determine if additional contamination exists. If no elevated field screening results are detected, samples will be collected to verify soil underlying the tank is not contaminated. Elevated field screening results will guide the cleanup of contaminated soil/tuff. Excavated soil will be sampled for waste characterization purposes as described in the Characterization Strategy section of this form.

Accessible portions of the associated inlet and outlet pipes of the septic tank will be excavated and removed. Soil underlying the pipes will be screened with appropriate field instruments (radioactivity, organic vapors) to determine if contamination exists. If no elevated field screening results are detected, samples will be collected to verify underlying soil is not contaminated. Elevated field screening results will guide the cleanup of contaminated soil underlying the inlet/outlet lines. Excavated soil will be placed in appropriate containers and sampled for waste characterization purposes (as described in the Characterization Strategy section of this form) then transported to TA-54 for storage and or disposal.

Outfall

Results from outfall samples collected during prior investigations identified an area of elevated radioactivity, PCBs and metals. The contaminated soil from this area will be excavated, placed in roll-offs or B-25 boxes. Elevated radiological field screening results will guide the cleanup of contaminated soil.

Decontamination Activities

Dry decontamination procedures will be employed to remove excess soil and associated contamination; hence no liquid decontamination wastes will be generated onsite

Acceptable Knowledge

Site Description

PRS 21-024(i) is a septic system that routed sewage from building TA-21-152. Blow-down from cooling towers at buildings TA-21-166 and TA-21-167 was also routed to this septic system. Effluent was discharged via a 6-in. vitrified-clay pipe (VCP) into a concrete septic tank (5 ft x 10 ft x 6 ft), then flowed through a 6-in. VCP onto a broad, gentle slope about 30 ft from the south edge of DP Mesa.

Sludge Waste Characterization Samples

The tank was separated into four quadrants and each quadrant was sampled. The samples were analyzed for toxicity-listed compounds using the toxic characteristic leaching procedure (TCLP); organic (volatile and semi-volatile) compounds; radioactive isotopes; total metals; and pesticides/PCBs. No organic or metal contaminants were found above regulatory limits using TCLP. The metal contaminants present below regulatory limits (toxicity) are arsenic, barium, cadmium, mercury, and lead. The organic contaminants present below regulatory limits are benzene, and 1,4-dichlorobenzene. All other TCLP compounds were below detection limits. The maximum concentrations of COPCs found in the sludge are reported below. In addition to analytical results, personnel working in the facility during the period that this septic system was operational have been interviewed on the use of solvents.

Name of constituent	Maximum	Name of constituent	Maximum
Gross alpha radiation	823 pCi/g	Arsenic (TCLP)	460 ug/l
Gross beta radiation	283 pCi/g	Barium (TCLP)	2120 ug/l
Th-227	294 pCi/g	Lead (TCLP)	502 ug/l
U-234	294 pCi/g	Benzene (TCLP)	360 ug/l
U-235	10.7 pCi/g	1,4Dichlorobenzene (TCLP)	43 ug/l
U-238	63 pCi/g	PCB	19 mg/kg
Pa-231	190 pCi/g	Mercury (TCLP)	1.0 ug/l
Tritium (H-3)	198,000 pCi/g	Cadmium (TCLP)	329 ug/l

Outfall Soil

Samples were collected within the outfall area from locations showing the highest levels of radiation detected using field instruments. The locations showing the highest radiation level were analyzed for a full suite of analyses. Four samples were analyzed for metal contaminants using the TCLP. Only barium and mercury were found to be present above detection limits using the TCLP procedure.

Name of constituent	Maximum	Name of constituent	Maximum
Gross alpha radiation	450 pCi/g	Barium (TCLP)	1500 ug/l
Gross beta radiation	160 pCi/g	Phenanthrene	220 ppb
Th-227	107 pCi/g	Fluoranthrene	280 ppb
U-234	44 pCi/g	PCB	1.9 mg/kg
U-238	63 pCi/g	Mercury (TCLP)	5.0 ug/l
Pa-231	82 pCi/g		
Tritium (H-3)	18.4 pCi/g		

Waste Description

Sludge: The sludge will be containerized in 55 gal drums and transported to TA-54 for storage and or disposal. Estimated volume of sludge is 4-5 cuyd.

Tank: The tank will be demolished and removed then placed in covered roll-offs or B-25 boxes. Waste will be transported to TA-54 for storage and or disposal. Estimated volume is 5-6 cuyd.

Outfall Soil: Soil from the outfall will be placed in covered roll-offs or B-25 boxes. Estimated volume is 50 cuyd.

Additional Soil: Any contaminated soil associated with tank or pipelines will be containerized in roll-offs or B-25 boxes, then transported to TA-54 for storage and or disposal.

Personal Protective Equipment (PPE): Removal and decontamination activities are expected to generate no more than 1.5 cuyd of PPE and debris. PPE will consist of nitrile and latex gloves, and Kleanguard coveralls. Other solid waste will consist of plastic sheeting, paper towels, and miscellaneous decontamination materials. After all visible contamination is removed; these materials will be placed in 55 gal drums. Waste will be transported to TA-54 for storage and or disposal.

Characterization Strategy

Description of Strategy:

Sludge: The sludge will be characterized based on analytical results from previous investigations.

Tank: The tank will be characterized based on its association with the sludge (acceptable knowledge).

Outfall Soil: The outfall soil will be characterized based on analytical results from previous investigations and additional sampling after soil has been containerized. Sampling will be done at a rate of approximately 1 sample per 5 cuyd and submitted for full-suite analyses.

Additional Excavated Soil Associated with Tank and Piping: If generated, representative composite sample(s) will be collected (number of samples depends upon volume and heterogeneity) and submitted for full-suite analyses.

Piping: Any removed piping will be characterized based on its association with sludge and additional sampling of any residues found in piping. Samples will be submitted for full-suite analyses.

PPE: PPE will be characterized on its association with each waste stream listed above (acceptable knowledge).

Analytical Strategy (excavated soil)					
Analyte Category	Analytical Method	May be Present (yes o, unknown	Direct Sampling of Containerized Waste	Acceptable Knowledge/ Existing Information	Acceptable Knowledge/ Data from Proposed Site Characterization
Volatile Organic Constituents	Fixed Lab SW-846	no			X

Semivolatile Constituents	Fixed Lab SW-846	yes	X		X
Organic Pesticides		no		X	X
Organic Herbicides		no		X	X
PCBs		yes	X		X
Total Metals	Fixed Lab SW-846	yes			X
Total Cyanide		no		X	X
Other Inorganic Constituents (specify)		no		X	X
High Explosive Constituents		no		X	
Asbestos		no		X	
TPH		yes		X	X
TCLP Metals	Fixed Lab SW-846	yes	X		X
TCLP Organics	Fixed Lab SW-846	yes	X		X
TCLP Pesticides and Herbicides	Fixed Lab SW-846	no		X	X
Gross Alpha	TA-21 Screening Lab	Yes	X		X
Gross Beta	TA-21 Screening Lab	no	X		X
Gross Gamma	TA-21 Screening Lab	yes	X		X
Tritium	TA-21 Screening Lab	yes	X		X
Gamma Spectroscopy		yes	X		X
Isotopic Plutonium		yes	X		X
Total Plutonium		yes	X		X
Isotopic Uranium		yes	X		X
Total Uranium		yes	X		X
Strontium-90		no		X	
Americium-241		no		X	

Preliminary RCRA Determination
Based on available information, indicate the waste and whether it could potentially be any of the wastes as defined in 40 CFR 261. List the F-, D-, K-, P-, or U- category and number.

OutfallSoil - No

Additional Soil - No

PPE and disposable sampling equipment - No

Sludge - No

RCRA Status

____ Non-RCRA: (No 90-Day Storage Requirement)
Describe how waste will be stored/handled:

____ RCRA: (90-Day Storage Requirement)
Waste will be stored/handled in accordance with 20 NMAC Generator Requirements

__X_ TSCA: (30-Day Storage Requirement)

Preliminary Determination for Radioactivity

Based on available information, indicated the amount and type of radiation contamination expected in the waste.

Preliminary Radioactivity Status

_____ Material is not radioactive

___X__ Material is radioactive

Based on analytical results from previous investigations, the sludge, tank, outfall soil, and associated PPE are low-level PCB waste; all containers will be labeled with "RADIOACTIVE" and "PCB" labels. All wastes will be stored in a secured onsite staging area prior to transport to TA-54.

Signatures:

Field Team Leader _____

Field Team Waste Management Coordinator _____

Waste Management Representative _____

Regulatory Compliance _____