INTERNATIONAL TECHNOLOGY CORPORATION

Project No. 301215
October, 1988

Interim Status Closure and Post-Closure Care Plan

Technical Area 35 TSL-125 Surface Impoundment Los Alamos National Laboratory Los Alamos, New Mexico

Los Alamos National Laboratory
Los Alamos, New Mexico

5040

RESPONSIVE TO THE NEEDS OF ENVIRONMENTAL MANAGEMENT

INTERNATIONAL TECHNOLOGY CORPORATION

Interim Status Closure and Post-Closure Care Plan

TABLE OF CONTENTS

	PAGE
LIST OF TABLES	iii
LIST OF FIGURES	iv
1.0 INTRODUCTION	1
2.0 FACILITY DESCRIPTION	1
2.1 SURFACE IMPOUNDMENT	2
2.2 FLOOR TROUGH AND PIPING	3
3.0 PROCESS INFORMATION	3
3.1 SURFACE IMPOUNDMENT	3
3.2 FLOOR TROUGH AND PIPING	4
4.0 WASTE DESCRIPTION	4
4.1 SURFACE IMPOUNDMENT	4
4.2 FLOOR TROUGH AND PIPING	5
5.0 CLOSURE AND POST-CLOSURE REQUIREMENTS	6
5.1 CLOSURE PLAN	6
5.1.1 Estimate of Maximum Liquid in the Hazardous Waste Units	6
5.1.1.1 Surface Impoundment	6
5.1.1.2 Floor Trough and Piping	6
5.1.2 Liquids and Residue Removal Procedures	6
5.1.2.1 Liquids Removal	7
5.1.2.1.1 Surface Impoundment	7
5.1.2.1.2 Floor Trough and Piping	7
5.1.2.2 Residue Removal	7
5.1.2.2.1 Floor Trough and Piping	7
5.1.2.2.2 Surface Impoundment	8
5.1.3 Decontamination and Removal Procedures	8
5.1.3.1 Floor Trough and Piping	8
5.1.3.2 Surface Impoundment Liner	9
5.1.3.3 Hazard Protection	10
5.1.3.4 Equipment Decontamination	10
5.1.4 Soil Sampling and Ground-Water Investigation Plans	11
5.1.4.1 Soil Sampling and Boring Plan	11
5.1.4.2 Ground-Water Investigation Plan	12
5.1.5 Sampling and Analysis Procedures	13

TABLE OF CONTENTS
(CONTINUED)

	PAGE
5.1.5.1 Waste Liquid and Rinsate Sampling	13
5.1.5.1.1 Sampler Preparation	14
5.1.5.1.2 Sampling Procedures	14
5.1.5.2 Soil Sampling	14
5.1.5.2.1 Trowel or Scoop Sampling Procedures	15
5.1.5.2.2 Split Barrel Sampler	15
5.1.5.2.3 Cleaning of Downhole Drilling Tools	15
5.1.5.3 Sample Handling and Documentation	15
5.1.5.4 Sample Analysis	17
5.1.6 Statistical Determination	17
5.1.7 Decontamination	17
5.1.8 Decontamination Verification	18
5.1.9 Closure Schedule	18
5.1.10 Closure Certification	19
5.2 POST-CLOSURE PLAN	19
5.3 NOTIFICATION IN DEED TO PROPERTY	19
5.4 CLOSURE COST ESTIMATE	20
5.5 FINANCIAL ASSURANCE MECHANISM FOR CLOSURE	20
5.6 POST-CLOSURE COST ESTIMATE	20
5.7 FINANCIAL ASSURANCE MECHANISM FOR POST-CLOSURE CARE	20
5.8 LIABILITY REQUIREMENTS	20

APPENDIX A - MANUFACTURER'S SAFETY DATA SHEETS SHELL DIALA(R) OIL AX

APPENDIX B - CERTIFICATES OF ANALYSES

APPENDIX C - TA-35-TSL-125 SURFACE IMPOUNDMENT GROUND-WATER MONITORING PLAN

LIST OF TABLES

TABLE NO.	TITLE
4-1	Results Of Volatile Organic Analyses For Liquid And Sludge Samples Collected At The TA-35-TSL-125 Surface Impoundment, June 9, 1988
4-2	Percent Surrogate Spike Recoveries For Volatile Organic Analyses Of Liquid And Sludge Samples Collected At The TA-35-TSL-125 Surface Impoundment, June 9, 1988
4-3	Results Of Extraction Procedure Toxicity Analyses For A Liquid Sample Collected At The TA-35-TSL-125 Surface Impoundment, June 9, 1988
4-4	Results Of Radionuclide Activity For A Liquid Sample Collected At The TA-35-TSL-125 Surface Impoundment, June 9, 1988
4-5	Results Of Polychlorinated Biphenyls (PCBs) Analyses For Liquid And Soil Samples Collected At The TA-35-TSL-125 Surface Impoundment
4-6	Soil Samples Collected At The TA-35-TSL-125 Surface Impoundment, June 20, 1988
4-7	Results Of Volatile Organic Analyses For Soil Samples Collected At The TA-35-TSL-125 Surface Impoundment, June 20, 1988
4-8	Percent Surrogate Spike Recoveries For Volatile Organic Analyses Of Soil Samples Collected At The TA-35-TSL-125 Surface Impoundment, June 20, 1988
4-9	Results of Volatile Organic Analysis For Surface Water Sample Collected Downstream Of The TA-35-TSL-125 Surface Impoundment, June 29, 1988
4-10	Percent Surrogate Spike Recoveries For Volatile Organic Analysis Of Surface Water Sample Collected Downstream Of The TA-35-TSL-125 Surface Impoundment, June 29, 1988
5-1	Checklist Of Suggested Items For Field Sampling
5-2	Sample Collection Methods
5-3	Analytical Parameters And Methods For Liquid And Soil Samples Collected At TA-35-TSL-125

LIST OF FIGURES

FIGURE NO.	TITLE
2-1	Location Map
2-2	Los Alamos Technical Area 35
2-3	Technical Area 35 Site Map
2-4	TA-35-TSL-125 Surface Impoundment And Sample Location
2-5	Engineering Drawing Of TA-35-TSL-125 Surface Impoundment
5-1	TA-35-TSL-125 Surface Impoundment and Proposed Test Hole Locations
5-2	Composite Liquid Waste Sampler (COLIWASA)
5-3	Hazardous Materials Sample Analysis Request

1.0 INTRODUCTION

This Closure and Post-Closure Care Plan is submitted in accordance with the requirements of 40 CFR 265.110 through 120 [New Mexico Hazardous Waste Management Regulations (NMHWMR) 206.C.2.a through 206.C.2.k], and 40 CFR 265.228 (NMHWMR 206.C.6.f). The plan identifies all steps necessary to close the a surface impoundment and associated structures located at Los Alamos National Laboratory (the Laboratory) Technical Area 35 (TA-35), Building 125, under interim status standards. This plan includes the following hazardous waste units: (1) a surface impoundment; (2) a floor trough and piping; and (3) ancillary piping.

The Laboratory wishes to close the surface impoundment and associated structures in accordance with the requirements of 40 CFR 265.228(a) and (b) [NMHWMR 206.C.6.f.(1) and (2)] for "clean closure." To meet the requirements of "clean closure," the Laboratory proposes to remove all standing liquids, wastes, and waste residue from the surface impoundment and associated structures; remove underlying and/or surrounding soil contaminated with hazardous constituents; and take all necessary steps to ensure that these closed areas will not become hazardous waste units in the future.

This document is organized as follows. Section 2.0 describes the existing hazardous waste units. Section 3.0 describes the processes which resulted in the generation of waste in these units. Section 4.0 presents the waste characteristics, and Section 5.0 presents the closure and post-closure procedures for these units.

2.0 FACILITY DESCRIPTION

The Laboratory is located in Los Alamos County (Figure 2-1) in north central New Mexico. The Laboratory, which occupies an area of 43 square miles, and the associated residential areas of Los Alamos and White Rock are situated on Pajarito Plateau. The Plateau consists of a series of finger-like mesas separated by deep east-west trending canyons. The mesa tops range in elevation from approximately 7,800 feet at the flank of the Jemez Mountains (located to the west of Los Alamos) to about 6,200 feet at their eastern extent where they

terminate above the Rio Grande Valley. Intermittent streams lie at the bottoms of the east-west trending canyons.

Los Alamos is divided into 32 active Technical Areas (TAs) (Figure 2-2). TA-35 is north-centrally located and is flanked by Mortandad Canyon to the north and Ten Site Canyon to the south (Figure 2-3). TA-35 is underlain by volcanic bedrock; the main aquifer lies approximately 1,000 feet below the surface. Detailed descriptions of the geology and hydrology are presented in the RCRA Part B Permit Application for Los Alamos National Laboratory and in the Hydrogeologic Assessment of Technical Area 54, Areas G and L.

Building 125 is located in the southwestern portion of TA-35 (Figure 2-3). A floor trough located inside Building 125 drains to a surface impoundment situated just south of the building, close to Ten Site Canyon's rim (Figure 2-4). Relatively undisturbed ground, sloping to the south, occurs to the east and west of the impoundment.

2.1 SURFACE IMPOUNDMENT

The surface impoundment was built in 1978 and brought into use in late 1979 or early 1980. During its first few years of operation, the surface impoundment was used to contain accidental spills. Since the early 1980's, the impoundment has been used to contain accidental releases of liquids from inside Building 125 in addition to precipitation runoff.

The surface impoundment is approximately 29 feet in length by 31 feet in width, covering an area of approximately 900 square feet. The impoundment sides are sloped at a ratio of one to one and are constructed of wire mesh sprayed with approximately four inches of gunite. The bottom of the impoundment is comprised of an eight-inch thick layer of clay and is ten feet in length by ten feet in width. The surface impoundment is 5.75 feet in depth at the center and has an effective capacity (with a one-foot freeboard) of 8,000 gallons. Engineering drawings for the impoundment are presented in Figure 2-5.

Only one point of inflow to the impoundment exists. This is a six-inch schedule 40 steel drain pipe entering the surface impoundment in the center of the north side approximately 1.0 to 1.5 feet from the bottom (Figure 2-5).

The drain pipe connects the surface impoundment to the outfall of the floor trough system in Building 125. There is no permanent outfall from the surface impoundment; however, the impoundment accidentally overtopped on December 3, 1986, spilling an unknown volume of insulating oil and water into Ten Site Canyon. On February 25, 1987, an unknown amount of water was siphoned from the impoundment into Ten Site Canyon in an attempt to prevent additional insulating oil from overtopping the impoundment. Sandbags were installed around the surface impoundment on June 25, 1988, to provide additional freeboard in the impoundment and reduce the risk of overtopping during a precipitation event. On July 1, 1988, the impoundment again overtopped releasing an unknown volume of insulating oil and water into Ten Site Canyon.

2.2 FLOOR TROUGH AND PIPING

An epoxy-coated floor trough runs length-wise through Building 125 (Figure 2-4). The trough is three feet in width and one foot in depth and is covered with a metal grate. Nine floor drains located throughout the center of the building direct spills to the floor trough via four-inch diameter or six-inch diameter cast iron drain pipes. Three floor drains direct spills into a two-inch diamenter cast iron drain pipe (Figure 2-4). The floor trough and two-inch drain pipe transmit flows to a four-inch cast iron pipe which directs the spilled fluids outside the building.

3.0 PROCESS INFORMATION

Building 125 is used for developing electron guns and related laser assemblies/equipment for a Laser Technology Research Program at the Laboratory. Equipment utilized in the building requires the use of insulating oil. Maintenance of the equipment and accidental spills have resulted in releases of the insulating oil into the surface impoundment, floor trough, and piping.

3.1 SURFACE IMPOUNDMENT

The surface impoundment normally receives nonhazardous insulating oil and floor cleaning rinsate via the floor trough and six-inch schedule 40 steel drain pipe from Building 125. In addition, the impoundment receives nonhazardous insulating oil and rainfall runoff. The liquids form two phases in the impoundment, an upper oil phase underlain by a water phase. Following

accidental releases of insulating oil into the impoundment from the building, the oil phase is pumped from the impoundment and transferred to the TA-54, Area L storage area. Pending sampling and analyses results, the insulating oil is transported off site for recycling or disposal at permitted facilities. The water phase is also removed from the impoundment and handled in the same manner.

3.2 FLOOR TROUGH AND PIPING

The floor trough contains accidental releases and transfer spills of insulating oil which might occur inside Building 125 and enter the system directly into the trough or indirectly from any of the 12 floor drains located throughout the building. Rinsate from floor cleaning activities is also contained in the floor trough (Figure 2-4). These fluids drain from Building 125 to the surface impoundment via a six-inch schedule 40 steel drain pipe.

4.0 WASTE DESCRIPTION

Shell DIALA(R) OIL AX insulating oil is used and processed in Building 125. Use of this insulating oil brand has not varied with time. Manufacturer's Safety Data Sheets for Shell DIALA(R) OIL AX are contained in Appendix A.

4.1 SURFACE IMPOUNDMENT

Regulation of the surface impoundment is due to the recent introduction of cleaning degreasers into the waste stream from accidental releases during cleaning and maintenance of equipment parts and the building's floors. These cleaning/degreaser wastes have entered the surface impoundment via the floor trough in Building 125.

One grab sample was collected from the surface impoundment on June 9, 1988, using a composite liquid waste sampler (COLIWASA) to obtain a vertical composite of two-phase liquid and sludge (see Figure 2-4 for sample location). The sample was stored in appropriate containers and preserved as specified in Section 5.1.5. The sample was analyzed for volatile organics, semivolatile organics, Extraction Procedure Toxicity (EP Toxic) metals, polychlorinated biphenyls (PCBs), and radionuclide activity. Results of volatile organic analyses confirm a cleaning degreaser profile with parts per million (ppm)

concentrations of 1,1,1-trichloroethane and 1,2,2-trifluoroethane (Table 4-1). Surrogate spike recoveries for the volatile organic analyses are provided in Table 4-2. Semivolatile organic results were inconclusive due to the presence of the oil phase in the sample. No EP Toxic concentrations of metals were detected in the sample (Table 4-3). Radiological analyses of the sample detected 5.0 picocuries per liter (pCi/ℓ), 4.9 pCi/ℓ, and -500 pCi/ℓ* of alpha, beta, and gamma activity, respectively (Table 4-4). Analytical results from surface impoundment oil/water grab samples collected on September 8, 1986, and July 29, 1987, indicate that polychlorinated biphenyls (PCBs) were not present in the insulating oil waste stream on those dates (Table 4-5). Laboratory results for these analyses are provided in Appendix B.

Preliminary sampling of soil and water in Ten Site Canyon has been conducted to determine impacts from surface impoundment spills. Soil samples were collected in Ten Site Canyon and analyzed for PCBs on December 4, 1986 (following the accidental overtopping of the impoundment on December 3, 1986) immediately downgradient of the impoundment, 20 feet downgradient of the impoundment, and 450 feet downgradient of the impoundment. PCBs were detected in the soil samples in concentrations of 9.1 micrograms per gram (μg/g), 11.7 μg/g, and 4.7 μg/g, respectively. No volatile organic compounds were detected. Additional soil samples were collected in Ten Site Canyon along the fall line of the overflow on June 20, 1988, and analyzed for volatile organic compounds (Tables 4-6, 4-7, and 4-8). Acetone in trace quantities was detected in two of the samples, one immediately downgradient of the impoundment and the other 30 feet downgradient of the impoundment. Hydrocarbon compounds, substituted benzene compounds, and tentatively identified camphene was detected in a soil sample located 100 feet below the confluence of the overflow fall line and stream channel. A grab sample of surface water in the bottom of Ten Site Canyon approximately a quarter mile downstream of the impoundment was collected on June 29, 1988, and analyzed for volatile organic compounds (Tables 4-9 and 4-10). Laboratory results for these analyses are also provided in Appendix B.

*Note: Negative value indicates concentration below analytical detection limits.

4.2 FLOOR TROUGH AND PIPING

The floor trough and piping inside Building 125 have contained releases of insulating oil and equipment/floor cleaning rinsate. Use of cleaning/degreaser compounds for equipment maintenance and floor cleaning is suspected of contaminating the waste stream with volatile organic compounds such as 1,1,1-trichloroethane and 1,2,2-trifluoroethane.

5.0 CLOSURE AND POST-CLOSURE REQUIREMENTS

5.1 CLOSURE PLAN

This closure plan for the TA-35-TSL-125 surface impoundment and associated structures is designed to meet the following performance standards:

- Protect human health and the environment;
- Prevent the escape of hazardous waste, hazardous waste constituents, leachate, contaminated rainfall, or waste decomposition products to the ground or surface waters or atmosphere; and
- Minimize future maintenance.

The Laboratory plans final closure for these areas in late 1988 or early 1989.

5.1.1 Estimate of Maximum Liquid in the Hazardous Waste Units

5.1.1.1 Surface Impoundment

The amount of waste oil/water stored in the surface impoundment has varied with time depending upon spill occurrences and precipitation events. The maximum waste oil/water stored in the surface impoundment at any one time is 8,000 gallons. The volume of liquid in the surface impoundment at the time of closure will depend upon prior precipitation events and accidental releases.

5.1.1.2 Floor Trough and Piping

The floor trough and piping which drain to the surface impoundment are designed such that liquid does not pond, but instead is drained immediately into the surface impoundment. Therefore, there is no standing liquid in these areas.

5.1.2 Liquids and Residue Removal Procedures

The procedures discussed below provide for removal of standing liquids, waste, and waste residue to meet the requirements of "clean closure" in accordance with 40 CFR 265.228(a) and (b) [NMHWMR 206.C.6.f.(1) and (2)].

5.1.2.1 Liquids Removal

All waste liquids meeting the definition of hazardous waste as defined in 40 CFR 261.3 (NMHWMR 201.A.3) will be either treated at Laboratory facilities or disposed of off site. All waste liquid shipped off site will be manifested in accordance with 40 CFR 262 Subpart B (NMHWMR 203). The waste transporter will have an EPA identification number in accordance with 40 CFR 263.11 (NMHWMR 205.B).

5.1.2.1.1 Surface Impoundment

Fluids will be pumped from the surface impoundment into U.S. Department of Transportation (DOT) approved tanker trucks, drums, or other containers. If required, the containers will be stored in the TA-54, Area L storage area until the waste fluid is either treated at Laboratory facilities or disposed of off site at a permitted facility.

5.1.2.1.2 Floor Trough and Piping

Not applicable. There are no standing liquids in the floor trough and piping.

5.1.2.2 Residue Removal

All waste residues meeting the definition of a hazardous waste will be removed from the surface impoundment, floor trough, and ancilliary piping and either be treated at Laboratory facilities or disposed of off site. All wastes shipped off site will be manifested in accordance with 40 CFR 262 Subpart B (NMHWMR 203). The waste transporter will have an EPA identification number in accordance with 40 CFR 263.11 (NMHWMR 205.B).

5.1.2.2.1 Floor Trough and Piping

The floor trough and piping inside Building 125 and the six-inch schedule 40 steel pipe draining to the surface impoundment will be washed using a high-pressure, hot-water washer to remove any residue. Following the wash, the trough and piping will be scrubbed (to the extent possible) using a

surfactant, such as Liquinox or Alconox, and rinsed with a high-pressure, hot-water washer. All residue rinsate will be temporarily collected in the surface impoundment and subsequently transferred into DOT-approved containers. One representative residue sample from each container will be composited into one sample and stored, preserved, and analyzed in accordance with the procedures in Section 5.1.5. The residue sample will be analyzed for volatile and semivolatile organic compounds, EP Toxic metals, and PCBs. The containers will be stored at the TA-54, Area L storage area pending sample results and determination of proper treatment/disposal methods.

5.1.2.2.2 Surface Impoundment

Residues will be physically removed from the impoundment (after residue removal and final decontamination of the floor trough and piping) by pumping or excavation and placed in DOT-approved drums or containers. The removal method used will depend on the physical characteristics of the residue. One representative residue sample from each drum or container will be composited into one sample and stored, preserved, and analyzed in accordance with procedures described in Section 5.1.5. The residue sample will be analyzed for volatile and semivolatile organic compounds, EP Toxic metals, and PCBs. The containers will be stored at the TA-54, Area L storage area pending sample results and determination of proper treatment/disposal methods.

5.1.3 Decontamination and Removal Procedures

5.1.3.1 Floor Trough and Piping

A decontamination rinse of the trough and piping will be performed using a surfactant such as Liquinox or Alconox. All rinsate will be temporarily collected in the surface impoundment and subsequently transferred into DOT-approved containers. A representative sample will be composited from the containers and analyzed for volatile and semivolatile organic compounds, EP Toxic metals, and PCBs. The decontamination washing, rinsate collection, sampling and analyses will be repeated until results indicate that the rinsate is no longer a hazardous waste as defined in 40 CFR 261.3 (NMHWMR 201.A.3). A determination that the final wash is not a hazardous waste will indicate that the floor trough and piping do not contain leachable quantities of hazardous constituents, thus meeting the "clean closure" requirements of 40 CFR 265.228(a) [NMHWMR 206.C.6.f.(1) and (2)]. Pending "clean" analysis results,

the trough system will be disconnected from the six-inch schedule 40 steel drain pipe and the trough outfall will be sealed. The six-inch schedule 40 steel drain pipe connecting the trough outfall to the surface impoundment will be filled with a concrete slurry following final decontamination. The trough will subsequently be used for primary containment of accidental releases of nonhazardous liquids within Building 125.

5.1.3.2 Surface Impoundment Liner

Following "clean" closure of floor trough/piping, the Laboratory desires to remove contaminants, if present, from the gunite surface impoundment liner. To accomplish this, the liner will be cleaned to meet the standards of 40 CFR 265.228(a) [NMHWMR 206.C.6.f.(1) and (2)]. The gunite liner will be washed using a high-pressure, hot-water washer to remove remaining residue. Following the wash, the liner will be scrubbed using a surfactant, such as Liquinox or Alconox, and rinsed with a high-pressure, hot-water washer. All rinsate will be collected and handled in the same manner as impoundment fluids.

A representative sample of the rinsate will be collected, stored, and preserved in accordance with procedures presented in Section 5.1.5. The sample will be analyzed for volatile and semivolatile organic compounds, EP Toxic metals, and PCBs. Methods for treatment and/or disposal of the rinsate will depend on results of sampling. While it is expected that rinsate from the second wash will not be hazardous waste, the decontamination washing procedure will be repeated, as necessary, utilizing appropriate solutions of surfactants, until the rinsate is no longer a hazardous waste as defined in 40 CFR 261.3 (NMHWMR 201.A.3). A determination that the final rinsate is not a hazardous waste will indicate that the liner does not contain hazardous constituents which are leachable in quantities sufficient for the liner to be determined a hazardous waste, and thus, meeting the requirements of 40 CFR 265.228(a) [NMHWMR 206.C.6.f.(1) and (2)]. Pending "clean" analysis results, the gunite liner will be broken, removed, and disposed of in a non-hazardous waste landfill. If the gunite liner final rinsate meets the definition of a hazardous waste as defined in 40 CFR 261.3 (NMHWMR 201.A.3), the liner will be treated/disposed of as a solid hazardous waste and transported off site to a permitted facility.

The clay bottom will be excavated and placed in DOT-approved containers. A representative sample of the clay bottom will be collected and analyzed for volatile and semivolatile organic compounds, EP Toxic metals, and PCBs. The containers will be stored at the TA-54, Area L storage area pending sample results and determination of proper treatment/disposal methods.

A composite sample will also be collected from the sandbags surrounding the perimeter of surface impoundment and analyzed for volatile and semivolatile organic compounds, EP Toxic metals, and PCBs. Should the sandbags be contaminated with hazardous constituents, the bags will be handled as a solid hazardous waste and transported off site to a permitted facility.

5.1.3.3 Hazard Protection

Personnel involved with sampling, liquids removal, and residues removal from the surface impoundment and associated structures will use proper protective clothing and equipment. The Laboratory's Industrial Hygiene Group (HSE-5) will be responsible for assessing hazards and determining protective clothing requirements.

5.1.3.4 Equipment Decontamination

Prior to use, decontamination equipment will be rinsed with distilled water. A representative sample of the rinsate will be collected, preserved, and analyzed in accordance with the procedures described in Section 5.1.5. The rinsate will be analyzed for volatile and semivolatile organic compounds, EP Toxic metals, and PCBs to determine if background concentrations of hazardous constituents are present in the equipment prior to use. After use, all equipment used in sampling and removal of liquids and residues will be scraped and brushed to remove the residue or the equipment will be disposed of as hazardous waste. The residue collected will be placed in DOT-approved drums for treatment or disposal as specified in Section 5.1.2.2. After use, the equipment will be decontaminated by washing with pesticide-grade hexane, rinsed with surfactants such as Liquinox or Alconox, and steam cleaned. Equipment decontamination rinsate will be collected and handled in the same manner as rinsate generated from decontamination of the hazardous waste units. Representative samples of the final rinsate will be collected and analyzed as described above. Protective clothing will be collected and

disposed of as solid hazardous waste and shipped off site to a permitted facility.

5.1.4 Soil Sampling and Ground-Water Investigation Plans

Soil and ground water (if encountered) will be sampled and investigated to determine whether fluids from the surface impoundment have contaminated the underlying and surrounding soil and ground water. The following sections present plans for determining the number and the location of samples to be collected and the procedures to be used for collection, storage, and preservation of samples.

5.1.4.1 Soil Sampling and Boring Plan

A surface soil sampling survey will be conducted around the surface impoundment, in areas with visible contamination (i.e., soil discoloration), and will continue downgradient into Ten Site Canyon along possible spill path routes. As dictated by the terrain, additional surface soil samples will be collected until the lateral extent of contamination is defined. Where contamination is detected on the surface, subsurface samples will be collected at one-foot depth intervals until the ultimate depth of contamination is determined.

Two background composite surface soil samples will be collected; one to the east and one to the west of the surface impoundment at a distance greater than 500 feet from the surface impoundment. The exact location and depths for background samples will be field selected based on topographic and geologic characteristics similar to the surface impoundment site.

After the surface impoundment has been removed, soil samples will be collected from the area immediately underlying the surface impoundment by augering/drilling one shallow test hole (Figure 5-1). A total of four soil samples will be collected in the test hole at intervals of 0 to 1 foot, 5 to 6 feet, 9 to 10 feet, and 19 to 20 feet (below the bottom of the surface impoundment). Sample intervals will be adjusted, if necessary, depending on the depth at which bedrock is encountered. These soil samples will be collected to determine if contaminants from the impoundment have migrated beneath the clay impoundment bottom.

All soil samples will be collected, stored, and preserved in accordance with protocols described in Section 5.1.5. Soil samples will be analyzed for volatile and semivolatile organic compounds, EP Toxic metals, and PCBs.

Should statistical analysis of soil-chemistry data indicate the presence of contamination by hazardous constituents (5.1.6), the Laboratory will further investigate the horizontal and vertical extent of contamination. Appropriate remedial actions will be determined and undertaken after contamination investigations have been conducted. Appropriate actions may include soil removal or treatment. Statistical comparisons of leachable metals data from soil samples should be analyzed with caution because weathering processes on differing parent material may yield significantly different metal concentrations in the resulting soils.

Evidence exists at the surface impoundment of incidents of overtopping. All soil contaminated with hazardous constituents located between the surface impoundment berm and the canyon rim, and at subsequent levels below the rim, will be excavated and stored at the TA-54, Area L storage area pending treatment/disposal determinations. Additional soil samples will then be taken in these areas to further delineate the remaining contamination. Further excavation may be required, pending these analytical results, such that clean closure requirements are met.

All removed contaminated soil will either be treated at the Laboratory facilities or disposed of off site at a permitted facility. All contaminated soil shipped off site will be manifested in accordance with 40 CFR 262 Subpart B (NMHWMR 203). The waste transporter will have an EPA identification number in accordance with 40 CFR 263.11 (NMHWMR 205.B).

5.1.4.2 Ground-Water Investigation Plan

Three test holes will be drilled on top of the mesa (approximately 7,210 feet a.m.s.l.) adjacent to the impoundment to a depth of approximately 120 feet (7,090 feet a.m.s.l.; ten feet below the canyon floor) to determine the likelihood of recovery of a representative volume of perched ground water (Figure 5-1). A soil sample will be collected at the bottom of each of the test holes and analyzed for volatile and semivolatile organic compounds, EP Toxic metals,

and PCBs. Based on hydrogeologic conditions in nearby areas, the top of the main aquifer lies at a depth of approximately 1,000 feet below the base of the surface impoundment.

The Laboratory anticipates that no measurable volumes of ground water will be encountered in the test holes. However, should measurable volumes of ground water be found, the test holes will be completed as monitoring wells meeting requirements of EPA's RCRA Ground-Water Monitoring Technical Enforcement Guidance Document (September, 1986). In this event, a fourth monitoring well will be installed, either as a hydraulically upgradient or downgradient well, to complete the network. The proposed ground-water monitoring plan and the outline of the ground-water quality assessment program are provided in Appendix C.

5.1.5 Sampling and Analysis Procedures

The following sections define procedures and methods for sampling, analysis, and documentation applicable to this closure plan. While the procedures and methods are specific, any applicable procedure or method defined in Test Methods for Evaluating Solid Wastes, EPA SW-846, most current edition (SW-846) may be used if conditions or experience shows the alternate method to be more appropriate.

Adequate preparation ensures that proper sampling is accomplished. A checklist of items required for field sampling is given in Table 5-1.

The sample collection personnel will be instructed to heed the following precautions:

- Do not smoke, eat, or handle any objects not necessary for sampling while performing sampling procedures.
- Do not sample downwind of any potential volatile organic compound sources such as car exhausts, open fuel tanks, etc. These could result in contamination of the sample. If any such sources are unavoidable, make a note of them in the field logbook.
- Leave caps on the sample containers until just before filling.
- Avoid handling the teflon bottle cap liners. Do nct use any liner which falls out of the cap and onto the ground.

- Gloves should be worn when taking samples and when handling bottles, especially those with added preservative.

5.1.5.1 Waste Liquid and Rinsate Sampling

A COLIWASA sampler or similar device will be used to sample liquids in the surface impoundment and rinsate from the liner and equipment cleaning. The recommended model of the COLIWASA is shown in Figure 5-2. As an alternative to the COLIWASA, disposable COLIWASAs or glass tubes may be used to sample liquids. The primary advantage in utilizing a disposable COLIWASA is that the COLIWASA will be disposed of as hazardous waste after each sample is collected, thus eliminating the potential for cross-contamination.

5.1.5.1.1 Sampler Preparation

The COLIWASA sampler must be clean before each use. The sampler must be washed with a warm detergent solution (Liquinox or Alconox), rinsed several times with tap water, rinsed with distilled water, drained of excess water, and air-dried or wiped dry. A necessary piece of equipment for cleaning the tube of the COLIWASA is a bottle brush that fits tightly inside the diameter of the tube. The brush is connected to a rod of sufficient length to reach the entire length of the sampler tube. Using this ramrod and fiber-reinforced paper towels, the COLIWASA tube may be quickly cleaned. Clean COLIWASA samplers will be stored until use in polyethylene plastic tubes or bags in a clean and protected area.

5.1.5.1.2 Sampling Procedures

- Assemble the clean glass COLIWASA sampler or disposable COLIWASA.
- Wear necessary protective clothing and gear and observe required sampling precautions.
- Slowly lower the COLIWASA sampler into the liquid at a rate that permits the levels of the liquid inside and outside the sampler tube to remain the same.
- When the sampler hits the bottom of the liquid, slowly withdraw the sampler with one hand while wiping the sampler tube with a disposable cloth with the other hand.
- Carefully discharge the sample into a glass container by slowly lifting the inner glass tube of the COLIWASA.

- Cap the glass container, attach a label and seal record in the field logbook, and complete the sample analysis request sheet and chain-of-custody record (Section 5.1.5.3).

5.1.5.2 Soil Sampling

Surface soil samples will be collected with a trowel, scoop, or hand-held bucket auger. To sample below one-foot depths, samples will be collected using a drilling rig with continuous flight hollow stem augers and split-barrel dry core samplers and/or split-spoon samplers. Only clean sampling equipment will be used for soil sampling. All samples will be collected in EPA-approved containers and preserved in accordance with EPA methods (Table 5-2).

5.1.5.2.1 Trowel or Scoop Sampling Procedures

- Take small, equal portions of sample from the surface or near the surface of the material to be sampled.
- Composite the samples in a glass container.
- Cap the container, attach a label and seal, record in field logbook, and complete the sample analysis request sheet and chain-of-custody record (Section 5.1.5.3).

5.1.5.2.2 Split-Barrel Sampler

- Assemble the clean split-barrel sampler to the drill rod.
- Continuous core (split-barrel sampler) to desired depth.
- Withdraw the drill rod from the auger string and retrieve the split-barrel sampler.
- Store the core sample in an appropriate sample container and packed in an insulated container with ice.
- Label the sample, affix the seals, record in the field logbook, complete sample analysis request sheet and chain-of-custody record, and deliver the samples to the laboratory for analysis (Section 5.1.5.3).

5.1.5.2.3 Cleaning of Downhole Drilling Tools

All downhole drilling tools (augers, drill rods, etc.) will be steam-cleaned or high-pressure, hot-water washed after completion of each test hole. The split-barrel sampler will be cleaned after each location or depth interval is

sampled. Wash fluids will be collected and analyzed to determine a proper disposal protocol.

5.1.5.3 Sample Handling and Documentation

Sample containers will be sealed with a gummed paper seal attached to the container in such a way that the seal must be broken in order to open the container. The seal and sample label will be completed with a waterproof pen. The sample label is necessary to prevent misidentification of samples and shall include, if applicable, the grid number referenced to positions staked on the site perimeter. The "field information" in the case of soil sampling, shall include observations such as the soil texture and surface appearance, ambient temperature and cloud cover at time of sampling, and precipitation conditions 24 hours before sampling. A chain-of-custody form is necessary to trace sample possession from the time of collection and must accompany every sample.

A separate closure sampling field logbook will be kept and will contain all information pertinent to field surveys and sampling. The logbook shall have bound and consecutively numbered pages in 8-1/2 by 11-inch format. Minimum entries include:

a. Purpose of sample (routine sampling, special sampling)

b. Location of sampling (coordinates referenced to staked field points, if soil sample)

c. Name and address of person making log entry

d. Type of process producing waste

e. Number and volume of sample taken

f. Description of each sampling location, sampling methodology, equipment used, etc.

g. Date and time of sample collection

h. Sample destination and transporter's name (name of laboratory, UPS, etc.)

i. Map or photograph of the sampling site, if any

j. Field observations (ambient temperature, sky conditions, past 24-hour precipitation, etc.)

k. Field measurements, if any (pH, flammability, explosivity, specific conductance, etc.)

l. Collector's sample identification number(s)

m. Signature of person responsible for the log entry

n. Analytical parameters requested.

Sampling situations vary widely. No general rule can be given as to the extent of information that must be entered in the logbook. A good rule, however, is to record sufficient information so that someone can reconstruct the sampling situation without relying on the collector's memory.

The sample shipment and chain-of-custody record will be accompanied by a sample analysis request sheet similar to Figure 5-3. The request sheet has two parts: field and laboratory. The field portion of this form will be completed by the person collecting the sample and include most of the pertinent information noted in the logbook. The laboratory portion is intended to be completed by the laboratory personnel when the sample is received.

5.1.5.4 Sample Analysis

All analyses, quality assurance, and quality control will follow methods defined in SW-846. The analytical methods expected to be employed for analysis of samples collected during closure activities are denoted in Table 5-3.

5.1.6 Statistical Determination

On completion of the sampling survey described in Section 5.1.4, the Laboratory will prepare a risk assessment for constituents showing a one standard deviation increase over the maximum background concentration. The risk assessment will determine the threshold concentration for each constituent that represents a significant risk to human health and the environment and will take into account all possible pathways. Soils containing regulated constituent levels above the threshold concentration will be considered contaminated.

A copy of the completed risk assessment, along with pertinent backup data, will be provided to the NMEID for review and approval of the threshold values. Should the NMEID find the threshold contamination levels inadequate, the Laboratory will negotiate threshold values agreeable to both parties.

5.1.7 Decontamination

The approach to decontamination depends on the extent of contamination, as determined by the sampling survey. If the sampling survey indicates that there are no contaminated areas at the surface impoundment and associated structures, no further action will be taken at the site.

Should removal of contaminated soil be necessary, the Laboratory will contract with a permitted transporter and disposal site contractor who will provide sealed gondola trucks or other DOT-approved, bulk-loading trucks for waste hauling. Decontamination of such trucks will take place at the permitted off-site disposal facility. Small equipment used to pick up soil will be scraped and brushed clean, and the accumulated dust will be placed in drums along with the contaminated soil. The equipment will be decontaminated as outlined in Section 5.1.3.5.

Personnel involved in sampling and decontamination will wear rubber gloves, safety glasses, and coveralls. Personnel involved in dust-generating activities, such as digging and filling drums, will wear dust masks to prevent inhalation of contaminated dust. The Laboratory's Industrial Hygiene Group, HSE-5, will review the site survey analytical data and recommend additional protective clothing.

The Laboratory recognizes that if extensive contamination has occurred, the closure plan presented here may be impractical. If the sampling survey indicates extensive contamination, the Laboratory will provide the survey data to the Director of NMEID within 30 days of the completion of the analytical work. Within 60 days of submission of the survey data, the Laboratory will provide an amended closure plan. The plan may also be amended under other circumstances as per 40 CFR 265.112(c) [NMHWMR 206.C.2.c.(2)].

5.1.8 Decontamination Verification

If soil removal is deemed necessary, decontamination of the underlying soil surface will be demonstrated by additional sampling. Because removal of contaminated soil will leave an exposed surface, the disturbed surface will be resampled in the same locations. Analysis and the determination of contamination is as previously discussed, and an analysis will be conducted only for those constituents that caused the area to be contaminated.

5.1.9 Closure Schedule

The Laboratory plans to initiate closure of the TA-35-TSL-125 surface impoundment and associated structures on the date this closure plan receives final regulatory approval. It is anticipated final closure will be initiated in late 1988 and be completed in early 1989. The following events will be completed on or before the time indicated below:

TIME (day)	ACTIVITY
0	Regulatory approval of closure plan
+15	Closure initiated
+15	Remove fluids and residue from surface impoundment, floor trough and piping, and bermed area; decontaminate areas
+75	Collection of soil samples and test hole drilling
+135	Removal of contaminated soil (if necessary)
+180	Certification completed.

If the soil surrounding the surface impoundment is contaminated and if extensive sampling and analysis is required, the removal or other remedial actions may take longer than 180 days. If this situation occurs, a demonstration will be made to the NMEID to explain the need to extend the 180 days closure time.

5.1.10 Closure Certification

An independent registered professional engineer and the owner/operator of the facility shall certify the closure and ensure that the closure follows this plan. Upon completion of closure, the engineer and the U.S. Department of Energy (DOE) shall prepare a letter, or letters, certifying that the area has

been closed in accordance with this plan. The letter(s) shall be dated and signed by each party and stamped by the registered engineer, and the original copy submitted by the DOE to the Director of the NMEID. One copy shall be maintained at the DOE offices and one copy maintained by the Laboratory Environmental Surveillance Group (HSE-8).

5.2 POST-CLOSURE PLAN

A Post-Closure Plan is not required for storage and treatment facilities.

5.3 NOTIFICATION IN DEED TO PROPERTY

The Laboratory will submit notice to local land authorities in accordance with 40 CFR 265.119 (NMHWMR 206.C.2.i) and a notation of deed in accordance with 265.120 (NMHWMR 206.C.2.j).

5.4 CLOSURE COST ESTIMATE

This section is not applicable because federal facilities are exempt from this section per 40 CFR 265.140(c) [NMHWMR 206.C.3.a.(3)].

5.5 FINANCIAL ASSURANCE MECHANISM FOR CLOSURE

This section is not applicable because federal facilities are exempt from this section per 40 CFR 265.140(c) [NMHWMR 206.C.3.a.(3)].

5.6 POST-CLOSURE COST ESTIMATE

This section is not applicable because federal facilities are exempt from this section per 40 CFR 265.140(c) [NMHWMR 206.C.3.a.(3)].

5.7 FINANCIAL ASSURANCE MECHANISM FOR POST-CLOSURE CARE

This section is not applicable because federal facilities are exempt from this section per 40 CFR 265.140(c) [NMHWMR 206.C.3.a.(3)].

5.8 LIABILITY REQUIREMENTS

This section is not applicable because federal facilities are exempt from this section per 40 CFR 265.140(c) [NMHWMR 206.C.3.a.(3)].

TABLE 4-1

RESULTS OF VOLATILE ORGANIC ANALYSES[1] FOR LIQUID AND SLUDGE SAMPLES COLLECTED AT THE TA-35-TSL-125 SURFACE IMPOUNDMENT JUNE 9, 1988

PARAMETER	LIQUID RESULTS (ppb)	LIQUID/SLUDGE RESULTS[2] (ppb)
Acetone	109.6 ± 54.8	D>200.0[3] (TIC)[4]
2-Butanone	ND<5.0[5]	48.1 ± 4.8
1,1-Dichloroethane	77.7 ± 7.8 (TIC)	ND<5.0
2-Hexanone	ND<5.0	35.3 ± 3.5
Methylene Chloride	ND<5.0	D>5.0 (TIC)
4-Methyl-2-Pentanone	ND<5.0	20.0 ± 20.0
Tetrachloroethene	ND<5.0	89.4 ± 8.9
1,1,1-Trichloroethane	ppm range[6]	151.2 ± 15.1
1,2,2-Trifluoroethane	ND<20.0	ppm range
m,p-Xylenes	NA[7]	72.1 ± 7.2
o-Xylene	NA	81.8 ± 40.9
Xylenes (TOTAL)	ND<5.0	153.9 ± 40.9

(1) Modified EPA Method 524. Analytical methods are taken from Test Methods for Evaluating Solid Waste, EPA SW 846.
(2) Intermixed liquid and solids; analyzed liquid fraction only.
(3) D = Detected at a concentration greater than the limit stated in the table above.
(4) TIC indicates a tentatively identified compound.
(5) ND = Not Detected; the limit of detection is the amount stated in the above table.
(6) The extremely high concentration of 1,1,1-Trichloroethane severely interfered with identification of some compounds.
(7) NA = Not Analyzed.

TABLE 4-2

PERCENT SURROGATE SPIKE RECOVERIES FOR
VOLATILE ORGANIC ANALYSES OF LIQUID AND SLUDGE SAMPLES
COLLECTED AT THE TA-35-TSL-125 SURFACE IMPOUNDMENT
JUNE 9, 1988

COMPOUND	LIQUID RESULTS (%)	LIQUID/ SLUDGE RESULTS (%)	CLP ACCEPTABLE RANGE (%)[1]
1,2-Dichloroethane d4	62.6	89.6	76-114
Toluene d8	95.7	109.2	88-110
p-Bromofluorobenzene	82.8	75.6	86-115

[1] U.S. Environmental Protection Agency Contract Laboratory Program (CLP) acceptable range of percent recovery.

TABLE 4-3

RESULTS OF EXTRACTION PROCEDURE TOXICITY ANALYSES FOR A LIQUID SAMPLE COLLECTED AT THE TA-35-TSL-125 SURFACE IMPOUNDMENT JUNE 9, 1988

EPA HAZARDOUS WASTE NUMBER	PARAMETER	RESULTS (mg/l)	EP TOXIC REGULATED CONCENTRATIONS[1] (mg/l)
D004	Arsenic	0.0025	5.0
D005	Barium	ND<0.1[2]	100.0
D006	Cadmium	0.0017	1.0
D007	Chromium	0.0026	5.0
D008	Lead	0.065	5.0
D009	Mercury	0.0019	0.2
D010	Selenium	ND<0.001	1.0
D011	Silver	0.003	5.0

(1) 40 CFR 261.24
(2) ND = Not Detected; the limit of detection is the amount stated in the table above.

TABLE 4-4

RESULTS OF RADIONUCLIDE ACTIVITY FOR A LIQUID SAMPLE COLLECTED FROM THE TA-35-TSL-125 SURFACE IMPOUNDMENT JUNE 9, 1988

RADIOACTIVE SOURCE	ACTIVITY (pCi/ℓ)	UNCERTAINTY (pCi/ℓ)
Alpha	5.0	±1.0
Beta	4.9	±0.7
Gamma	-500.0[1]	±200.0

[1] Negative value indicates concentrations below analytical detection limits.

TABLE 4-5

RESULTS OF POLYCHLORINATED BIPHENYLS (PCBs) ANALYSES FOR LIQUID AND SOIL SAMPLES COLLECTED AT THE TA-35-TSL-125 SURFACE IMPOUNDMENT

SAMPLE NUMBER	DATE SAMPLED	SAMPLE TYPE	SAMPLE METHOD	SAMPLE LOCATION	ANALYTICAL RESULTS (μg/g)
86.05274	09/08/86	Oil/Water	Grab	Surface Impoundment	ND<2.0[1]
86.05286	12/04/86	Soil	Grab	~450' below rim (into Ten Site Canyon)	4.7
86.05287	12/04/86	Soil	Grab	~20' below rim (into Ten Site Canyon)	11.7
86.05288	12/04/86	Soil	Grab	At confluence of Ten Site Canyon rim and spill path[2]	9.1
87.01842	07/29/87	Oil	Grab	Surface Impoundment	ND<1.3

(1) ND = Not Detected; the limit of detection is the amount stated in the above table.
(2) Spill occurred December 3, 1986.

TABLE 4-6

SOIL SAMPLES COLLECTED AT THE TA-35-TSL-125 SURFACE IMPOUNDMENT JUNE 20, 1988

SAMPLE IDENTIFICATION	SAMPLE METHOD	SAMPLE LOCATION
88.00353	Grab	~5 ft. below rim of impoundment along fall line of overflow (Location A, Figure 2-4)
88.00354	Grab	~30 ft. below rim of impoundment along fall line of overflow (Location B, Figure 2-4)
88.00355	Grab	~60 ft. below rim of impoundment along fall line of overflow (Location C, Figure 2-4)
88.00356	Grab	~20 ft. below confluence of fall line and stream channel (Location D, Figure 2-4)
88.00357	Grab	~100 ft. below confluence of fall line and stream channel (Location E, Figure 2-4)

TABLE 4-7

RESULTS OF VOLATILE ORGANIC ANALYSES[1]
FOR SOIL SAMPLES COLLECTED AT THE
TA-35-TSL-125 SURFACE IMPOUNDMENT
JUNE 20, 1988

PARAMETERS	SAMPLE IDENTIFICATION 88.00353	88.00354	88.00355	88.00356	88.00357[2]
	CONCENTRATION ()g/gm)				
Acetone	Trace[3]	Trace[3]	ND<10	ND<10	ND<10
2-Butanone	ND<10[4]	ND<10	ND<10	ND<10	ND<10
1,1-Dichloroethane	ND<10	ND<10	ND<10	ND<10	ND<10
2-Hexanone	ND<10	ND<10	ND<10	ND<10	ND<10
Methylene Chloride	ND<10	ND<10	ND<10	ND<10	ND<10
4-Methyl-2-Pentanone	ND<10	ND<10	ND<10	ND<10	ND<10
Tetrachloroethene	ND<10	ND<10	ND<10	ND<10	ND<10
1,1,1-Trichloroethane	ND<10	ND<10	ND<10	ND<10	ND<10
1,1,2-Trichloro-1,2,2-Trifluoroethane	ND<10	ND<10	ND<10	ND<10	ND<10
m,p-Xylenes	NA[5]	NA	NA	NA	NA
o-Xylenes	NA	NA	NA	NA	NA
Xylenes (TOTAL)	ND<10	ND<10	ND<10	ND<10	ND<10

(1) Modified EPA Method 524. Analytical methods are taken from Test Methods for Evaluating Solid Waste, EPA-SW-846.
(2) Detected hydrocarbons, substituted benzenes, and tentatively-identified camphene. Also detected p-Isopropyltoluene, but <MDL.
(3) Acetone is a common laboratory and glassware contaminant.
(4) ND = Not Detected; the limit of detection is the amount stated in the above table.
(5) NA = Not Analyzed.

INTERNATIONAL TECHNOLOGY CORPORATION

TABLE 4-8

PERCENT SURROGATE SPIKE RECOVERIES FOR
VOLATILE ORGANIC ANALYSES OF SOIL SAMPLES
COLLECTED AT THE TA-35-TSL-125 SURFACE IMPOUNDMENT
JUNE 20, 1988

SAMPLE IDENTIFICATION	PERCENT RECOVERY[2] 1,2-DICHLOROETHANE d4	TOLUENE d8	p-Bromofluorobenzene	Bromobenzene
88.00353	128.0/130.6	118.3/116.4	96.6/96.7	139.6/54.5
88.00354	123.0/127.1	112.2/111.3	98.4/97.3	39.3/18.3
88.00355	123.6	104.6	93.5	78.6
88.00356	80.8/79.8	89.3/86.2	82.9/83.0	35.3/37.3
88.00357	83.3/75.3	81.7/85.8	86.0/84.2	35.8
CLP[1] ACCEPTABLE RANGE	76-114	88-110	86-115	---[3]

(1) U.S. Environmental Protection Agency Contract Laboratory Program (CLP) acceptable range of percent recovery.
(2) Two replicate performed, unless only one percentage listed.
(3) Spiked into soil prior to extraction, not a CLP required surrogate.

INTERNATIONAL TECHNOLOGY CORPORATION

TABLE 4-9

RESULTS OF VOLATILE ORGANIC ANALYSIS[1] FOR SURFACE WATER SAMPLE COLLECTED DOWNSTREAM[2] OF THE TA-35-TSL-125 SURFACE IMPOUNDMENT JUNE 29, 1988

PARAMETER	SURFACE WATER RESULTS (µG/L)
Acetone	ND<10[3]
2-Butanone	ND<10
1,1-Dichloroethane	ND<10
2-Hexanone	ND<10
Methylene Chloride	ND<10
4-Methyl-2-Pentanone	ND<10
Tetrachloroethene	ND<10
1,1,1-Trichloroethane	ND<10
1,2,2-Trifluoroethane	NA[4]
m,p-Xylenes	NA
o-Xylene	NA
Xylenes (TOTAL)	NA

(1) Modified EPA Method 524. Analytical methods are taken from Test Methods for Evaluating Solid Waste, EPA SW 846.
(2) Location F, Figure 2-4.
(3) ND = Not Detected; the limit of detection is the amount stated in the above table.
(4) NA = Not Analyzed.

TABLE 4-10

PERCENT SURROGATE SPIKE RECOVERIES FOR VOLATILE ORGANIC ANALYSIS OF SURFACE WATER SAMPLE COLLECTED DOWNSTREAM OF THE TA-35-TSL-125 SURFACE IMPOUNDMENT JUNE 29, 1988

COMPOUND	SURFACE WATER RESULTS (%)	CLP ACCEPTABLE RANGE (%)[1]
1,2-Dichloroethane d4	77.1	76-114
Toluene d8	83.8	88-110
p-Bromofluorobenzene	80.0	86-115

[1] U.S. Environmental Protection Agency Contract Laboratory Program (CLP) acceptable range of percent recovery.

TABLE 5-1

CHECKLIST OF SUGGESTED ITEMS FOR FIELD SAMPLING

ITEM	USE
Field log book	To keep sample records
Disposable towels or rags	To clean sampling equipment
Large polyethylene bags	To store waste papers, rags, etc.
Polyethylene bags	To store sample containers
Waterproof pens	To complete records and labels
Apron, oil and acid proof or coveralls	Protective garment
Face mask	Protective garment
Liquinox or Alconox Detergent	Used to clean sampler
Protective gloves	Protective garment

TABLE 5-2

SAMPLE COLLECTION METHODS

CONSTITUENT	CONTAINER TYPE	CONTAINER SIZE	PRESERVATIVE[a] TYPE	PRESERVATIVE[a] AMOUNT
Arsenic, Barium, Cadmium, Chromium, Lead, Mercury, Selenium, Silver, Nickel	Glass, silica/teflon septa	250 mℓ	---	---
Volatile Organics	Glass, silica/teflon septa	(2) 40 mℓ	---	---
Semi-Volatile Organics	Glass, silica/teflon septa	250 mℓ	---	---

[a] All samples will be cooled to 4°C upon collection.

TABLE 5-3

ANALYTICAL PARAMETERS AND METHODS FOR LIQUID AND SOIL SAMPLES COLLECTED AT TA-35-TSL-125

EPA HAZARDOUS WASTE NUMBER	METALS	EP TOXIC REGULATED CONCENTRATIONS	EPA ANALYTICAL METHOD[1]
D004	Arsenic	5.0 mg/ℓ	1310
D005	Barium	100.00	1310
D006	Cadmium	1.0	1310
D007	Chromium	5.0	1310
D008	Lead	5.0	1310
D009	Mercury	0.2	1310
D010	Selenium	1.0	1310
D011	Silver	5.0	1310
--	Nickel	-	1310
Organic Scan			
	GC/MS for volatile organics		8240
	GC/MS for semivolatile organics		8250 or 8270

(1) Analytical methods are taken from Test Methods for Evaluating Solid Waste, EPA SW 846, and may be superceded by more current or alternate methods from SW 846.

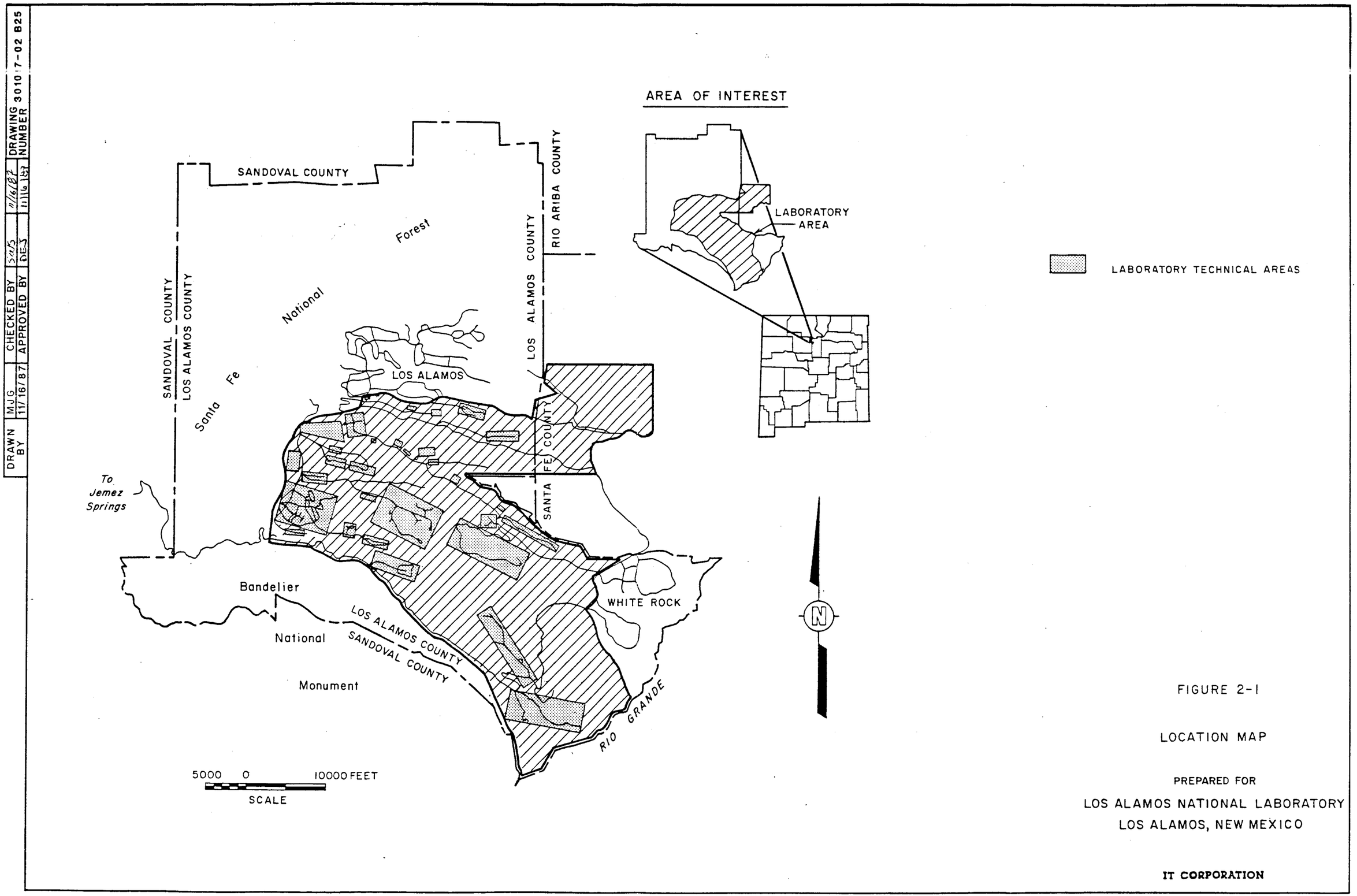

FIGURE 2-1

LOCATION MAP

PREPARED FOR

LOS ALAMOS NATIONAL LABORATORY
LOS ALAMOS, NEW MEXICO

IT CORPORATION

DRAWN BY	LLF 7/5/88	CHECKED BY	CCB	DRAWING NUMBER	30 215 02 02 B5
		APPROVED BY	DET		

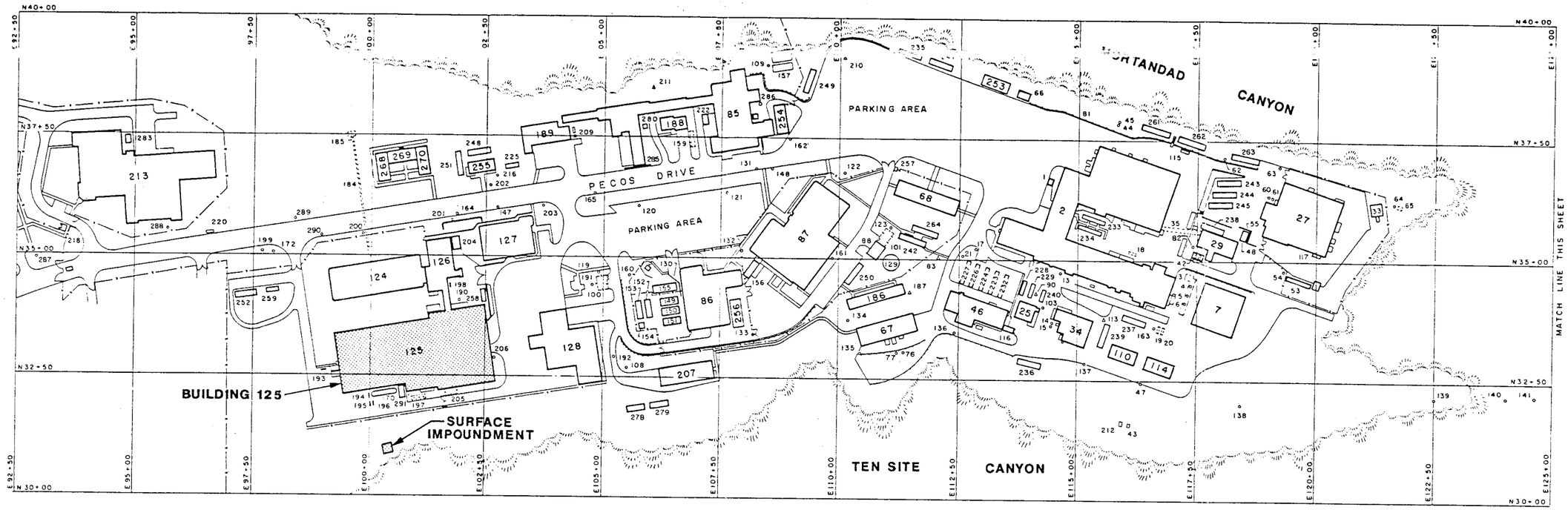

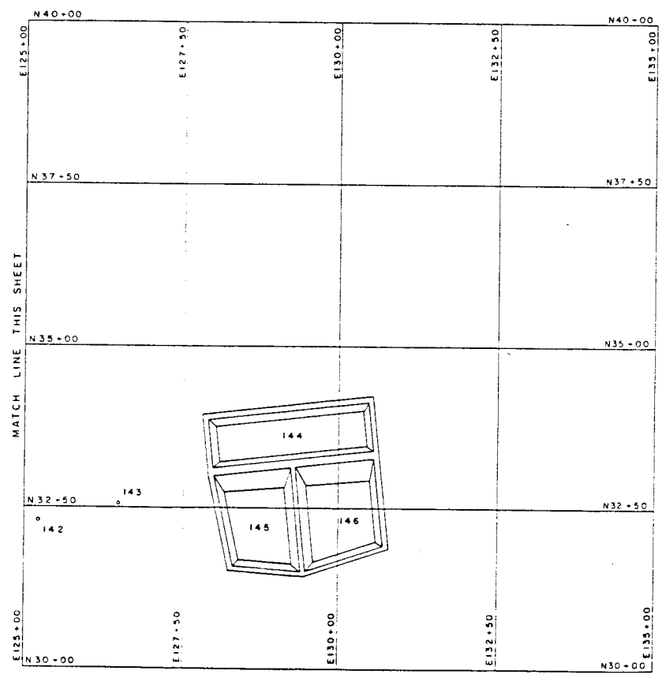

"MODIFIED FROM TECHNICAL AREA STRUCTURE LOCATION PLANS, TA-35, LOS ALAMOS NATIONAL LABORATORY, 1986"

0 50 100 200 300 FEET
0 25 50 75 100 METERS
SCALE

FIGURE 2-3

TECHNICAL AREA 35 SITE MAP

PREPARED FOR

LOS ALAMOS NATIONAL LABORATORY
LOS ALAMOS, NEW MEXICO

© 1984 IT CORPORATION
ALL COPYRIGHTS RESERVED

"Do Not Scale This Drawing"

IT ... Creating a Safer Tomorrow

65360

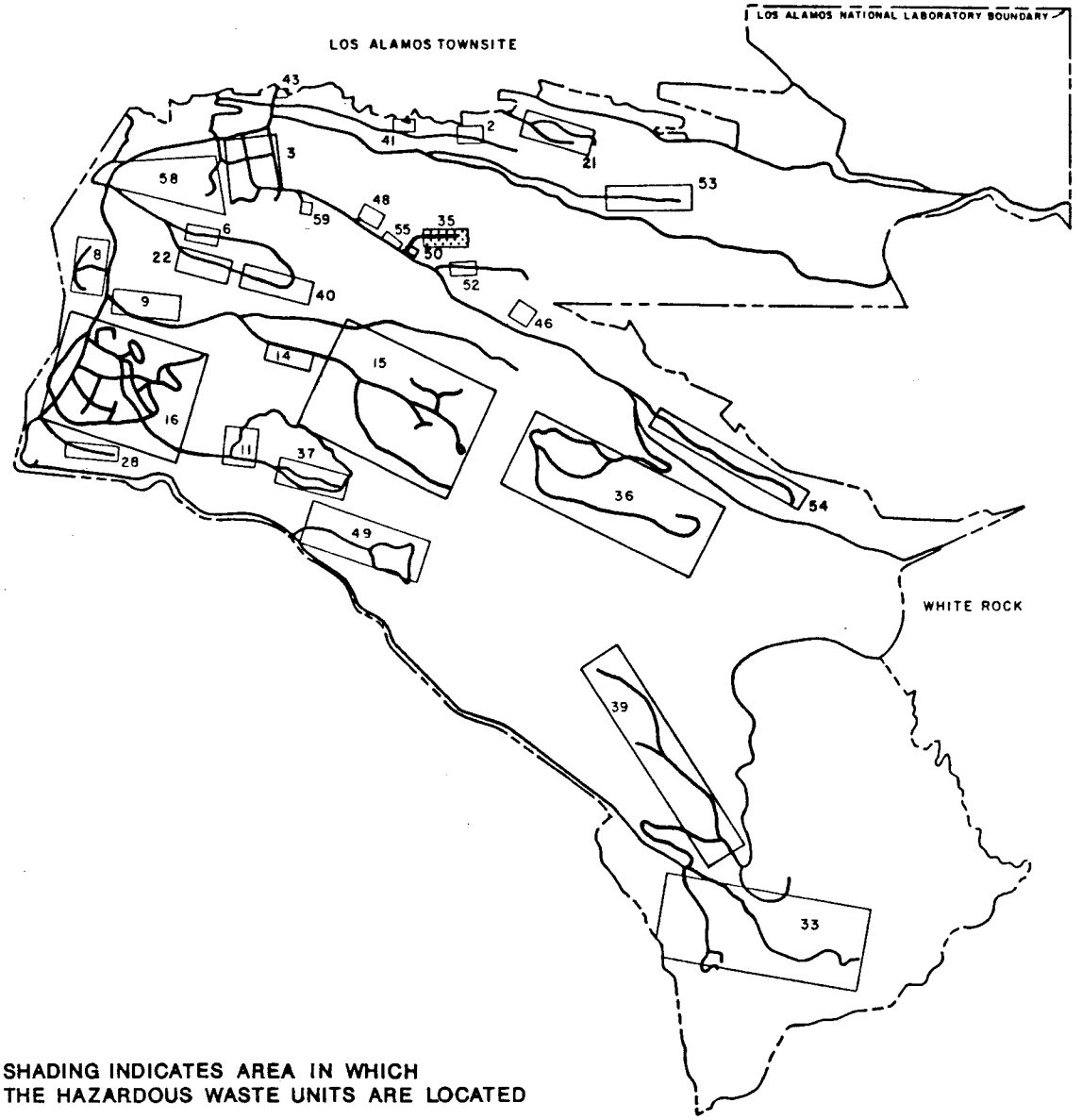

SHADING INDICATES AREA IN WHICH THE HAZARDOUS WASTE UNITS ARE LOCATED

N

4000 0 4000

SCALE

FIGURE 2-2

LOS ALAMOS TECHNICAL AREA 35

PREPARED FOR

LOS ALAMOS NATIONAL LABORATORY

LOS ALAMOS, NEW MEXICO

IT CORPORATION

REVISED	LLF	7/5/88	CHECKED BY	SCOS	7/8/88	DRAWN BY	MJG	CHECKED BY	SCOS	11/16/87	DRAWING NUMBER 301017-02 A102
DRWG. NO. 301215 02 02 A4			APPROVED BY	DET			11/16/87	APPROVED BY	DET	11/19/87	

32803

106467	1,4-DICHLOROBENZENE		5.0
91023	NAPHTHALENE		5.0
104518	n-BUTYLBENZENE		5.0
108861	BROMOBENZENE		5.0
95498	2-CHLOROTOLUENE		5.0
106434	4-CHLOROTOLUENE		5.0
142289	1,3-DICHLOROPROPANE		5.0
87683	HEXACHLOROBUTADIENE		5.0
630206	1,1,1,2-TETRACHLOROETHANE		5.0
120821	1,2,4-TRICHLOROBENZENE		5.0
96184	1,2,3-TRICHLOROPROPANE		5.0
95636	1,2,4-TRIMETHYLBENZENE		5.0
75694	TRICHLOROFLUOROMETHANE		5.0
106934	1,2-DIBROMOETHANE		5.0
98828	ISOPROPYLBENZENE		5.0
98066	t-BUTYLBENZENE		5.0
135988	s-BUTYLBENZENE		5.0
99876	p-ISOPROPYLTOLUENE		5.0
544105	1-CHLOROHEXANE		5.0
563586	1,1-DICHLOROPROPENE		5.0
108703	1,3,5-TRICHLOROBENZENE		5.0
96128	1,2-DIBROMO-3-CHLOROPROPANE		5.0
67641	ACETONE		5.0
60297	DIETHYL ETHER	~200.0 TIC	50.0
76131	1,1,2-TRICHLORO-1,2,2-TRIFLUOROETHANE		20.0

ppm range
(parts per million)

MDL: Estimated minimum detection limit. The minimum limit of quantitation for these samples was 20 ppb.

All results are reported with a corresponding uncertainty. Values close to the MDL have larger uncertainties associated with them. If a sample is run at least in triplicate, the reported uncertainty represents the standard deviation of these values.

* m,p-xylene 72.1 ± 7.2
o-xylene 81.8 ± 40.9

SAMPLE NUMBER: 88-00328 REQUEST SHEET NUMBER: 88.7061

Water and solids, intermixed. Analyzed the liquid only.
TIC indicates a tentatively identified compound.
Unknown hydrocarbon detected.
No dilutions run

HSE-9 ORGANIC ANALYSIS SECTION
VOLATILE ORGANICS RESULT SHEET

SAMPLE NUMBER: 88-00330 REQUEST SHEET: 88.7061 5-7-125 water
NUMBER OF REPLICATE RUNS: 1

SURROGATE SPIKE RECOVERIES: (% RECOVERY)

COMPOUND		ACCEPTABLE RANGE (CLP)
1,2-DICHLOROETHANE d4	62.6	(76-114)
TOLUENE d8	95.7	(88-110)
p-BROMOFLUOROBENZENE	82.8	(86-115)

CAS #	COMPOUND	RESULT +/- (ppb)		MDL (ppb)
74873	CHLOROMETHANE			5.0
73839	BROMOMETHANE			5.0
75014	VINYL CHLORIDE			5.0
75003	CHLOROETHANE			5.0
75092	METHYLENE CHLORIDE			5.0
75150	CARBON DISULFIDE			5.0
75354	1,1-DICHLOROETHENE			5.0
75343	1,1-DICHLOROETHANE	77.7 ± 7.8 TIC		5.0
540590	1,2-DICHLOROETHENE		(TOTAL)	5.0
67663	CHLOROFORM			5.0
107062	1,2-DICHLOROETHANE			5.0
78933	2-BUTANONE			5.0
71556	1,1,1-TRICHLOROETHANE	parts per million range		5.0
56235	CARBON TETRACHLORIDE			5.0
108054	VINYL ACETATE			5.0
75274	BROMODICHLOROMETHANE			5.0
78875	1,2-DICHLOROPROPANE			5.0
10061015	cis-1,3-DICHLOROPROPENE			5.0
79016	TRICHLOROETHENE			5.0
124481	DIBROMOCHLOROMETHANE			5.0
79005	1,1,2-TRICHLOROETHANE			5.0
71432	BENZENE			5.0
10061026	trans-1,3-DICHLOROPROPENE			5.0
75252	BROMOFORM			5.0
108101	4-METHYL-2-PENTANONE			5.0
591786	2-HEXANONE			5.0
127184	TETRACHLOROETHENE			5.0
79345	1,1,2,2-TETRACHLOROETHANE			5.0
108883	TOLUENE			5.0
108907	CHLOROBENZENE			5.0
100414	ETHYLBENZENE			5.0
100425	STYRENE			5.0
133027	XYLENES		(TOTAL)	5.0
95501	1,2-DICHLOROBENZENE			5.0
541731	1,3-DICHLOROBENZENE			5.0

106467	1,4-DICHLOROBENZENE		5.0
91023	NAPHTHALENE		5.0
104518	n-BUTYLBENZENE		5.0
108861	BROMOBENZENE		5.0
95498	2-CHLOROTOLUENE		5.0
106434	4-CHLOROTOLUENE		5.0
142289	1,3-DICHLOROPROPANE		5.0
87683	HEXACHLOROBUTADIENE		5.0
630206	1,1,1,2-TETRACHLOROETHANE		5.0
120821	1,2,4-TRICHLOROBENZENE		5.0
96184	1,2,3-TRICHLOROPROPANE		5.0
95636	1,2,4-TRIMETHYLBENZENE		5.0
75694	TRICHLOROFLUOROMETHANE		5.0
106934	1,2-DIBROMOETHANE		5.0
98828	ISOPROPYLBENZENE		5.0
98066	t-BUTYLBENZENE		5.0
135988	s-BUTYLBENZENE		5.0
99876	p-ISOPROPYLTOLUENE		5.0
544105	1-CHLOROHEXANE		5.0
563586	1,1-DICHLOROPROPENE		5.0
108703	1,3,5-TRICHLOROBENZENE		5.0
96128	1,2-DIBROMO-3-CHLOROPROPANE		5.0
67641	ACETONE	109.6 ± 54.8	5.0
60297	DIETHYL ETHER		50.0
76131	1,1,2-TRICHLORO-1,2,2-TRIFLUOROETHANE		20.0

MDL: Estimated minimum detection limit. The minimum limit of quantitation for these samples was 20 ppb.

All results are reported with a corresponding uncertainty. Values close to the MDL have larger uncertainties associated with them. If a sample is run at least in triplicate, the reported uncertainty represents the standard deviation of these values.

SAMPLE NUMBER: 88-00330 REQUEST SHEET NUMBER: 88.7061

appeared to be primarily water. The extremely high concentration of the 1,1,1-Trichloroethane severly interferred with identification of some compounds. Since this was an identification scan, no additional dilutions were performed. "TIC" indicates a tentatively identified compound. Also detected 2 unknown peaks, apparently halogenated hydrocarbons

A blank next to a compound indicates a result of <MDL

HSE-9 ORGANIC ANALYSIS RESULTS
VOLATILE ORGANICS

REQUEST SHEET NUMBER: 88.7083
SAMPLE NUMBERS: 88.06203
SUBMITTER: TONY GRIEGGS, HSE-8
DATE: JULY 18,1988
NOTEBOOK/PAGE REFERENCE: R6572, p.115

The above samples were received on June 29, 1988. They were refrigerated until analysis which began on July 5, 1988. The samples were analyzed using purge and trap/gas chromatography/mass spectrometry. The results obtained for each sample are attached. Samples are normally run with a series of quality assurance/quality check (QA/QC) samples. The results obtained for the blind QA/QC sample analyzed with the above batch are attached. The results of other QA/QC check analyses are available from me if you need this information. Analysis of the laboratory blank showed the presence of methylene chloride and 1,2-dichloroethane at low levels. Please call if you have any questions.

Suzanne Bell
HSE-9 Organic Analysis Section

mag 7/20/88
QA/QC Approval

RECEIVED
SEP 02 1988
IT CORP.-ALBUQUERQUE

Los Alamos
Los Alamos National Laboratory

HSE-9 Analytical Chemistry Request

7083

Requestor	Program Code	Sample Owner	Date	Total No. Samples
HSE-8	W447	TG	6/29/88	1

Sample Numbers	Matrix	Analysis	Tech	Analyst	Priority	Remarks
88-062 03	WN	141	PTGC	SCB	2	
88-98579						
~~[illegible]~~						

1083

REQUESTOR DATA SHEET # 1 of 1

Log Book SAMP Page 16

Sampled by Tony Grieggs Collection Date 6/29/88 Time _____ Weather _____ Witness _____

Presampling Conference Completed With _____ On _____ Send Report To Tony Grieggs MS K490

Phone 5-0451 Source of Sample: TA-35 stream bed Reason for Sampling _____

Group HSE-8 Site 59 Building 043 Room No. 103

Priority Assigned: 1. Emergency; 2. Recognized Danger; 3. Imminent Deadline; 4. Special Survey; 5. Routine;

(Circle One) Priority Approval: _____ (1. GL or DGL; 2. or 3. AGL; 4. or 5. SL)

Method of Analysis Complies With: _____

Background Information Useful to Analyst (Contamination Levels, Hazards, Etc.) _____

Chain of Custody: Yes _____ (See Attached Form) No _____ Other Information _____

All Samples Submitted to HSE-9 Must Be Screened For Radioactivity. Samples Containing Greater Than 20 dpm Total Alpha or 100 dpm Combined Gamma/Beta Contamination Cannot Be Handled At TA-59.

Sample Number	Other I.D.	Sampling Location	Analysis Requested	Sampling Method	Sample Type	Preservative Utilized	Radioactivity Scan (dpm) Alpha	Radioactivity Scan (dpm) Beta/Gamma	Remarks
88.06203	—	35 [redacted]	VOA	G	SW	—	—	—	—

Sampling Method: 24FC=24 Hour Flow-Weighted Composite; 24TC=24 Hour Time-Weighted Composite; G=Grab; B=Ball; D=Drill; C=Core; P=Pump; O=Other (Please Specify)

Sample Type: E=Effluent; SL=Sludge: SO=Soil; SC=Soil Core; WW=Well Water; SW=Surface Water; O=Other

Preservative: F=Filtered; NF=Non-Filtered; NA=Non Acidified; A H_2SO_4(2 ml/l); A HNO_3(5 ml/l); A HNO_3(5 ml/l); A H_3PO_4 & $CuSO_4$; A=Other; I=Iced; P=NaOH.

LOS ALAMOS NATIONAL LABORATORY
HEALTH, SAFETY, AND ENVIRONMENT DIVISION
HEALTH AND ENVIRONMENTAL CHEMISTRY GROUP HSE-9
ORGANIC ANALYSIS SECTION

VOLATILE ORGANICS RESULTS
PURGEABLE ORGANICS IN WATER

Stream water approx. 1/4 mile downstream of TA-35-125 oil pit.

SAMPLE NUMBER: 88.06203
MISCELLANEOUS INFORMATION: 88.7083 ISM/PSS
ID FILE USED: VOLATILE ORGANIC COMPOUND INSTRUMENT #2 10-200 PPB
INJECTION TIME: 880705 21:45
QUANTITATION TIME: 880706 10:29
CALIBRATION TIME: 880706 10:22

SURROGATE SPIKE RECOVERIES: (IN UG/L)

COMPOUND	ADDED	RECOVERED	% RECOVERY
1,2-DICHLOROETHANE d4	50.0	38.574	77.1
TOLUENE d8	50.0	41.876	83.8
4-BROMOFLUOROBENZENE	50.0	40.023	80.0

THE EPA CONTRACT LABORATORY PROGRAM (CLP) SETS FORTH THE FOLLOWING AS ACCEPTABLE LIMITS FOR THE PERCENT RECOVERY OF THE SURROGATES:

1,2-DICHLOROETHANE d4	76-114%
TOLUENE d8	88-110%
4-BROMOFLUOROBENZENE	86-115%

TARGET COMPOUNDS

COMPOUND	CONCENTRATION IN UG/L	
CHLOROMETHANE	< MDL	
VINYL CHLORIDE	< MDL	
BROMOMETHANE	< MDL	
CHLOROETHANE	< MDL	
ACETONE	< MDL	
DIETHYL ETHER	< MDL	
TRICHLOROFLUOROMETHANE	< MDL	
IODOMETHANE	< MDL	
112TRICHLORO122TRIFLUOROETHANE	< MDL	
METHYLENE CHLORIDE	< MDL	
CARBON DISULFIDE	10.556	False positive.
t-1,2-DICHLOROETHENE	< MDL	
1,1-DICHLOROETHANE	< MDL	
c-1,2-DICHLOROETHENE	< MDL	
CHLOROFORM	< MDL	
1,2-DICHLOROETHANE	< MDL	
1,1-DICHLOROPROPENE	< MDL	

HSE-9 ORGANIC ANALYSIS SECTION
VOLATILE ORGANICS RESULT SHEET
SOIL ANALYSIS

SAMPLE NUMBER: 88.08354 REQUEST SHEET: 88.7067
NUMBER OF REPLICATE RUNS: 2

SURROGATE SPIKE RECOVERIES: (% RECOVERY)

COMPOUND		ACCEPTABLE RANGE (CLP)
1,2-DICHLOROETHANE d4	123.0/127.1	(76-114)
TOLUENE d8	112.2/111.3	(88-110)
p-BROMOFLUOROBENZENE	98.9/97.3	(86-115)
BROMOBENZENE	39.3/18.3	(SPIKED ONTO SOIL PRIOR TO EXTRACTION, NOT A CLP REQUIRED SURROGATE)

CAS #	COMPOUND	RESULT +/- (ppb)		MDL (ug/gm)
74873	CHLOROMETHANE	<MDL		10.0
73839	BROMOMETHANE			10.0
75014	VINYL CHLORIDE			10.0
75003	CHLOROETHANE			10.0
75092	METHYLENE CHLORIDE			10.0
75150	CARBON DISULFIDE			10.0
75354	1,1-DICHLOROETHENE			10.0
75343	1,1-DICHLOROETHANE			10.0
540590	1,2-DICHLOROETHENE		(TOTAL)	10.0
67663	CHLOROFORM			10.0
107062	1,2-DICHLOROETHANE			10.0
78933	2-BUTANONE			10.0
71556	1,1,1-TRICHLOROETHANE			10.0
56235	CARBON TETRACHLORIDE			10.0
108054	VINYL ACETATE			10.0
75274	BROMODICHLOROMETHANE			10.0
78875	1,2-DICHLOROPROPANE			10.0
10061015	cis-1,3-DICHLOROPROPENE			10.0
79016	TRICHLOROETHENE			10.0
124481	DIBROMOCHLOROMETHANE			10.0
79005	1,1,2-TRICHLOROETHANE			10.0
71432	BENZENE			10.0
10061026	trans-1,3-DICHLOROPROPENE			10.0
75252	BROMOFORM			10.0
108101	4-METHYL-2-PENTANONE			10.0
591786	2-HEXANONE			10.0
127184	TETRACHLOROETHENE			10.0
79345	1,1,2,2-TETRACHLOROETHANE			10.0
108883	TOLUENE			10.0
108907	CHLOROBENZENE			10.0
100414	ETHYLBENZENE			10.0
100425	STYRENE			10.0
133027	XYLENES	✓	(TOTAL)	10.0

95501	1,2-DICHLOROBENZENE	<MDL	10.0
541731	1,3-DICHLOROBENZENE		10.0
106467	1,4-DICHLOROBENZENE		10.0
91023	NAPHTHALENE		10.0
104518	n-BUTYLBENZENE		10.0
108861	BROMOBENZENE		10.0
95498	2-CHLOROTOLUENE		10.0
106434	4-CHLOROTOLUENE		10.0
142289	1,3-DICHLOROPROPANE		10.0
87683	HEXACHLOROBUTADIENE		10.0
630206	1,1,1,2-TETRACHLOROETHANE		10.0
120821	1,2,4-TRICHLOROBENZENE		10.0
96184	1,2,3-TRICHLOROPROPANE		10.0
95636	1,2,4-TRIMETHYLBENZENE		10.0
75694	TRICHLOROFLUOROMETHANE		10.0
106934	1,2-DIBROMOETHANE		10.0
98828	ISOPROPYLBENZENE		10.0
98066	t-BUTYLBENZENE		10.0
135988	s-BUTYLBENZENE		10.0
99876	p-ISOPROPYLTOLUENE		10.0
544105	1-CHLOROHEXANE		10.0
563586	1,1-DICHLOROPROPENE		10.0
108703	1,3,5-TRICHLOROBENZENE		10.0
96128	1,2-DIBROMO-3-CHLOROPROPANE		10.0
67641	ACETONE	Trace	10.0
60297	DIETHYL ETHER	<MDL	10.0
76131	1,1,2-TRICHLORO-1,2,2-TRIFLUOROETHANE	<MDL	10.0

MDL: Estimated minimum detection limit. The minimum limit of quantitation for these samples was approximately 20 ppm (ug/gm of soil). A recovery of 10% was assumed.

All results are reported with a corresponding uncertainty. Values close to the MDL have larger uncertainties associated with them. If a sample is run at least in triplicate, the reported uncertainty represents the standard deviation of these values.

SAMPLE NUMBER: 88-00354 REQUEST SHEET NUMBER: 88.7067

HSE-9 ORGANIC ANALYSIS SECTION
VOLATILE ORGANICS RESULT SHEET
SOIL ANALYSIS

SAMPLE NUMBER: 88.00355 REQUEST SHEET: 88.7067
NUMBER OF REPLICATE RUNS: 1

SURROGATE SPIKE RECOVERIES: (% RECOVERY)

COMPOUND		ACCEPTABLE RANGE (CLP)
1,2-DICHLOROETHANE d4	123.6	(76-114)
TOLUENE d8	104.6	(88-110)
p-BROMOFLUOROBENZENE	93.5	(86-115)
BROMOBENZENE	78.6	(SPIKED ONTO SOIL PRIOR TO EXTRACTION, NOT A CLP REQUIRED SURROGATE)

CAS #	COMPOUND	RESULT +/- (ppb)		MDL (ug/gm)
74873	CHLOROMETHANE	cmdl		10.0
73839	BROMOMETHANE			10.0
75014	VINYL CHLORIDE			10.0
75003	CHLOROETHANE			10.0
75092	METHYLENE CHLORIDE			10.0
75150	CARBON DISULFIDE			10.0
75354	1,1-DICHLOROETHENE			10.0
75343	1,1-DICHLOROETHANE			10.0
540590	1,2-DICHLOROETHENE		(TOTAL)	10.0
67663	CHLOROFORM			10.0
107062	1,2-DICHLOROETHANE			10.0
78933	2-BUTANONE			10.0
71556	1,1,1-TRICHLOROETHANE			10.0
56235	CARBON TETRACHLORIDE			10.0
108054	VINYL ACETATE			10.0
75274	BROMODICHLOROMETHANE			10.0
78875	1,2-DICHLOROPROPANE			10.0
10061015	cis-1,3-DICHLOROPROPENE			10.0
79016	TRICHLOROETHENE			10.0
124481	DIBROMOCHLOROMETHANE			10.0
79005	1,1,2-TRICHLOROETHANE			10.0
71432	BENZENE			10.0
10061026	trans-1,3-DICHLOROPROPENE			10.0
75252	BROMOFORM			10.0
108101	4-METHYL-2-PENTANONE			10.0
591786	2-HEXANONE			10.0
127184	TETRACHLOROETHENE			10.0
79345	1,1,2,2-TETRACHLOROETHANE			10.0
108883	TOLUENE			10.0
108907	CHLOROBENZENE			10.0
100414	ETHYLBENZENE			10.0
100425	STYRENE			10.0
133027	XYLENES		(TOTAL)	10.0

95501	1,2-DICHLOROBENZENE	<mDL	10.0
541731	1,3-DICHLOROBENZENE		10.0
106467	1,4-DICHLOROBENZENE		10.0
91023	NAPHTHALENE		10.0
104518	n-BUTYLBENZENE		10.0
108861	BROMOBENZENE		10.0
95498	2-CHLOROTOLUENE		10.0
106434	4-CHLOROTOLUENE		10.0
142289	1,3-DICHLOROPROPANE		10.0
87683	HEXACHLOROBUTADIENE		10.0
630206	1,1,1,2-TETRACHLOROETHANE		10.0
120821	1,2,4-TRICHLOROBENZENE		10.0
96184	1,2,3-TRICHLOROPROPANE		10.0
95636	1,2,4-TRIMETHYLBENZENE		10.0
75694	TRICHLOROFLUOROMETHANE		10.0
106934	1,2-DIBROMOETHANE		10.0
98828	ISOPROPYLBENZENE		10.0
98066	t-BUTYLBENZENE		10.0
135988	s-BUTYLBENZENE		10.0
99876	p-ISOPROPYLTOLUENE		10.0
544105	1-CHLOROHEXANE		10.0
563586	1,1-DICHLOROPROPENE		10.0
108703	1,3,5-TRICHLOROBENZENE		10.0
96128	1,2-DIBROMO-3-CHLOROPROPANE		10.0
67641	ACETONE		10.0
60297	DIETHYL ETHER		10.0
76131	1,1,2-TRICHLORO-1,2,2-TRIFLUOROETHANE		10.0

MDL: Estimated minimum detection limit. The minimum limit of quantitation for these samples was approximately 20 ppm (ug/gm of soil). A recovery of 10% was assumed.

All results are reported with a corresponding uncertainty. Values close to the MDL have larger uncertainties associated with them. If a sample is run at least in triplicate, the reported uncertainty represents the standard deviation of these values.

SAMPLE NUMBER: 88-00355 REQUEST SHEET NUMBER: 88.7067

HSE-9 ORGANIC ANALYSIS SECTION
VOLATILE ORGANICS RESULT SHEET
SOIL ANALYSIS

SAMPLE NUMBER: 88 00356 REQUEST SHEET: 88.7067
NUMBER OF REPLICATE RUNS: 2

SURROGATE SPIKE RECOVERIES: (% RECOVERY)

COMPOUND		ACCEPTABLE RANGE (CLP)
1,2-DICHLOROETHANE d4	80.5/79.8	(76-114)
TOLUENE d8	89.3/88.2	(88-110)
p-BROMOFLUOROBENZENE	82.9/83.0	(86-115)
BROMOBENZENE	35.3/37.0	(SPIKED ONTO SOIL PRIOR TO EXTRACTION, NOT A CLP REQUIRED SURROGATE)

CAS #	COMPOUND	RESULT +/- (ppb)		MDL (ug/gm)
74873	CHLOROMETHANE	<MDL		10.0
73839	BROMOMETHANE			10.0
75014	VINYL CHLORIDE			10.0
75003	CHLOROETHANE			10.0
75092	METHYLENE CHLORIDE			10.0
75150	CARBON DISULFIDE			10.0
75354	1,1-DICHLOROETHENE			10.0
75343	1,1-DICHLOROETHANE			10.0
540590	1,2-DICHLOROETHENE		(TOTAL)	10.0
67663	CHLOROFORM			10.0
107062	1,2-DICHLOROETHANE			10.0
78933	2-BUTANONE			10.0
71556	1,1,1-TRICHLOROETHANE			10.0
56235	CARBON TETRACHLORIDE			10.0
108054	VINYL ACETATE			10.0
75274	BROMODICHLOROMETHANE			10.0
78875	1,2-DICHLOROPROPANE			10.0
10061015	cis-1,3-DICHLOROPROPENE			10.0
79016	TRICHLOROETHENE			10.0
124481	DIBROMOCHLOROMETHANE			10.0
79005	1,1,2-TRICHLOROETHANE			10.0
71432	BENZENE			10.0
10061026	trans-1,3-DICHLOROPROPENE			10.0
75252	BROMOFORM			10.0
108101	4-METHYL-2-PENTANONE			10.0
591786	2-HEXANONE			10.0
127184	TETRACHLOROETHENE			10.0
79345	1,1,2,2-TETRACHLOROETHANE			10.0
108883	TOLUENE			10.0
108907	CHLOROBENZENE			10.0
100414	ETHYLBENZENE			10.0
100425	STYRENE			10.0
133027	XYLENES		(TOTAL)	10.0

95501	1,2-DICHLOROBENZENE	<MDL	10.0
541731	1,3-DICHLOROBENZENE		10.0
106467	1,4-DICHLOROBENZENE		10.0
91023	NAPHTHALENE		10.0
104518	n-BUTYLBENZENE		10.0
108861	BROMOBENZENE		10.0
95498	2-CHLOROTOLUENE		10.0
106434	4-CHLOROTOLUENE		10.0
142289	1,3-DICHLOROPROPANE		10.0
87683	HEXACHLOROBUTADIENE		10.0
630206	1,1,1,2-TETRACHLOROETHANE		10.0
120821	1,2,4-TRICHLOROBENZENE		10.0
96184	1,2,3-TRICHLOROPROPANE		10.0
95636	1,2,4-TRIMETHYLBENZENE		10.0
75694	TRICHLOROFLUOROMETHANE		10.0
106934	1,2-DIBROMOETHANE		10.0
98828	ISOPROPYLBENZENE		10.0
98066	t-BUTYLBENZENE		10.0
135988	s-BUTYLBENZENE		10.0
99876	p-ISOPROPYLTOLUENE		10.0
544105	1-CHLOROHEXANE		10.0
563586	1,1-DICHLOROPROPENE		10.0
108703	1,3,5-TRICHLOROBENZENE		10.0
96128	1,2-DIBROMO-3-CHLOROPROPANE		10.0
67641	ACETONE		10.0
60297	DIETHYL ETHER		10.0
76131	1,1,2-TRICHLORO-1,2,2-TRIFLUOROETHANE		10.0

MDL: Estimated minimum detection limit. The minimum limit of quantitation for these samples was approximately 20 ppm (ug/gm of soil). A recovery of 10% was assumed.

All results are reported with a corresponding uncertainty. Values close to the MDL have larger uncertainties associated with them. If a sample is run at least in triplicate, the reported uncertainty represents the standard deviation of these values.

SAMPLE NUMBER: 88-00356 REQUEST SHEET NUMBER: 88.7067

HSE-9 ORGANIC ANALYSIS SECTION
VOLATILE ORGANICS RESULT SHEET
SOIL ANALYSIS

SAMPLE NUMBER: 88 00357 REQUEST SHEET: 88.7067
NUMBER OF REPLICATE RUNS: 2

SURROGATE SPIKE RECOVERIES: (% RECOVERY)

COMPOUND		ACCEPTABLE RANGE (CLP)
1,2-DICHLOROETHANE d4	83.3/75.3	(76-114)
TOLUENE d8	51.7/55.8	(88-110)
p-BROMOFLUOROBENZENE	86.0/84.2	(86-115)
BROMOBENZENE	35.?	(SPIKED ONTO SOIL PRIOR TO EXTRACTION, NOT A CLP REQUIRED SURROGATE) (one replicate reported)

CAS #	COMPOUND	RESULT +/- (ppb)		MDL (ug/gm)
74873	CHLOROMETHANE	2mol		10.0
73839	BROMOMETHANE			10.0
75014	VINYL CHLORIDE			10.0
75003	CHLOROETHANE			10.0
75092	METHYLENE CHLORIDE			10.0
75150	CARBON DISULFIDE			10.0
75354	1,1-DICHLOROETHENE			10.0
75343	1,1-DICHLOROETHANE			10.0
540590	1,2-DICHLOROETHENE		(TOTAL)	10.0
67663	CHLOROFORM			10.0
107062	1,2-DICHLOROETHANE			10.0
78933	2-BUTANONE			10.0
71556	1,1,1-TRICHLOROETHANE			10.0
56235	CARBON TETRACHLORIDE			10.0
108054	VINYL ACETATE			10.0
75274	BROMODICHLOROMETHANE			10.0
78875	1,2-DICHLOROPROPANE			10.0
10061015	cis-1,3-DICHLOROPROPENE			10.0
79016	TRICHLOROETHENE			10.0
124481	DIBROMOCHLOROMETHANE			10.0
79005	1,1,2-TRICHLOROETHANE			10.0
71432	BENZENE			10.0
10061026	trans-1,3-DICHLOROPROPENE			10.0
75252	BROMOFORM			10.0
108101	4-METHYL-2-PENTANONE			10.0
591786	2-HEXANONE			10.0
127184	TETRACHLOROETHENE			10.0
79345	1,1,2,2-TETRACHLOROETHANE			10.0
108883	TOLUENE			10.0
108907	CHLOROBENZENE			10.0
100414	ETHYLBENZENE			10.0
100425	STYRENE			10.0
133027	XYLENES		(TOTAL)	10.0

95501	1,2-DICHLOROBENZENE	<MDL	10.0
541731	1,3-DICHLOROBENZENE		10.0
106467	1,4-DICHLOROBENZENE		10.0
91023	NAPHTHALENE		10.0
104518	n-BUTYLBENZENE		10.0
108861	BROMOBENZENE		10.0
95498	2-CHLOROTOLUENE		10.0
106434	4-CHLOROTOLUENE		10.0
142289	1,3-DICHLOROPROPANE		10.0
87683	HEXACHLOROBUTADIENE		10.0
630206	1,1,1,2-TETRACHLOROETHANE		10.0
120821	1,2,4-TRICHLOROBENZENE		10.0
96184	1,2,3-TRICHLOROPROPANE		10.0
95636	1,2,4-TRIMETHYLBENZENE		10.0
75694	TRICHLOROFLUOROMETHANE		10.0
106934	1,2-DIBROMOETHANE		10.0
98828	ISOPROPYLBENZENE		10.0
98066	t-BUTYLBENZENE		10.0
135988	s-BUTYLBENZENE		10.0
99876	p-ISOPROPYLTOLUENE	Detected, but <MDL	10.0
544105	1-CHLOROHEXANE		10.0
563586	1,1-DICHLOROPROPENE		10.0
108703	1,3,5-TRICHLOROBENZENE		10.0
96128	1,2-DIBROMO-3-CHLOROPROPANE		10.0
67641	ACETONE		10.0
60297	DIETHYL ETHER		10.0
76131	1,1,2-TRICHLORO-1,2,2-TRIFLUOROETHANE		10.0

MDL: Estimated minimum detection limit. The minimum limit of quantitation for these samples was approximately 20 ppm (ug/gm of soil). A recovery of 10% was assumed.

All results are reported with a corresponding uncertainty. Values close to the MDL have larger uncertainties associated with them. If a sample is run at least in triplicate, the reported uncertainty represents the standard deviation of these values.

SAMPLE NUMBER: 88-00357 REQUEST SHEET NUMBER: 88.7067

Also detected hydrocarbons, substituted benzenes, and tentatively identified Camphene.

VINYL ACETATE	< MDL
2-BUTANONE	< MDL
2,2-DICHLOROPROPANE	< MDL
1,1,1-TRICHLOROETHANE	< MDL
CARBON TETRACHLORIDE	< MDL
1,2-DICHLOROPROPANE	< MDL
DIBROMOMETHANE	< MDL
BROMODICHLOROMETHANE	< MDL
t-1,3-DICHLOROPROPENE	< MDL
c-1,3-DICHLOROPROPENE	< MDL
1,1,2-TRICHLOROETHANE	< MDL
1,3-DICHLOROPROPANE	< MDL
CHLORODIBROMOMETHANE	< MDL
BROMOFORM	< MDL
4-METHYL-2-PENTANONE	< MDL
2-HEXANONE	< MDL
1,2-DIBROMOETHANE	< MDL
TETRACHLOROETHENE	< MDL
1,1,1,2-TETRACHLOROETHANE	< MDL
1-CHLOROHEXANE	< MDL
ETHYL BENZENE	< MDL
m,p-XYLENE	< MDL
o-XYLENE	< MDL
STYRENE	< MDL
1,1,2,2-TETRACHLOROETHANE	< MDL
1,2,3-TRICHLOROPROPANE	< MDL
ISOPROPYL BENZENE	< MDL
BROMOBENZENE	< MDL
n-PROPYL BENZENE	< MDL
2-CHLOROTOLUENE	< MDL
4-CHLOROTOLUENE	< MDL
1,3,5-TRIMETHYLBENZENE	< MDL
t-BUTYLBENZENE	< MDL
1,2,4-TRIMETHYLBENZENE	< MDL
s-BUTYLBENZENE	< MDL
1,3-DICHLOROBENZENE	< MDL
1,4-DICHLOROBENZENE	< MDL
p-ISOPROPYLTOLUENE	< MDL
1,2-DICHLOROBENZENE	< MDL
1,2-DIBROMO-3-CHLOROPROPANE	< MDL
1,2,4-TRICHLOROBENZENE	< MDL
NAPTHALENE	< MDL
1,2,3-TRICHLOROBENZENE	< MDL
1,1-DICHLOROETHENE	< MDL
BENZENE	< MDL
TRICHLOROETHENE	< MDL
TOLUENE	< MDL
CHLOROBENZENE	< MDL
n-BUTYLBENZENE	< MDL
HEXACHLOROBUTADIENE	< MDL

ALL UNCERTAINTIES ARE +/- 10% UNLESS OTHERWISE NOTED.

MINIMUM DETECTION LIMTS (MDL'S) ARE BETWEEN 1 AND 5 UG/L UNLESS OTHERWISE NOTED. THE MINUMUM QUANTITATION LIMIT FOR THIS SAMPLES WAS 10.0 UG/L FOR ALL COMPOUNDS.

COMMENTS: CS_2 is a common lab contaminent.
CS_2 Scan was not good, False positive.

HSE-9 ORGANIC ANALYSIS RESULTS
VOLATILE ORGANICS

REQUEST SHEET NUMBER: 88.7067
SAMPLE NUMBERS: 88.00353-00357
SUBMITTER: Tony Grieggs, HSE-8
DATE: July 29, 1988
NOTEBOOK/PAGE REFERENCE: R6572, p.137

The above samples were received on June 20, 1988. They were refrigerated until extraction which began on June 24, 1988. The extracts were stored at (-) 20c until analysis which began on July 24, 1988. The samples were analyzed using purge and trap/gas chromatography/mass spectrometry. The results obtained for each sample are attached. The limits of detection for this analysis are relatively high. Please refer to the results sheets. A surrogate spike compound was added to each soil sample prior to extraction. The recovery of this compound is used to gauge the efficacy of the extraction technique. The percent recovery obtained for each sample is noted on the results sheets. The recoveries varied and were in general low which is not uncommon for this type of analysis. Several duplicates and replicates were analyzed although only 1 or 2 are included in the results tabulations.

Please call if you have any questions.

Suzanne Bell
HSE-9 Organic Analysis Section

RECEIVED
SEP 02 1988
IT CORP.-ALBUQUERQUE

88.00353-357

REQUESTOR DATA SHEET # 1of1

Log Book Samp Page 15

Sampled by Tony Grieggs Collection Date 6/20/88 Time 0900 Weather _____ Witness _____

Presampling Conference Completed With _____ On _____ Send Report To Tony Grieggs MS K490

Phone 5-0451 Source of Sample: TA-35-125 (oil pit overflow) Reason for Sampling Closure

Group HSE-8 Site 59 Building ~~10943~~ Room No. 103

Priority Assigned: 1. Emergency; 2. Recognized Danger; 3. Imminent Deadline; 4. Special Survey; 5. Routine;

(Circle One) Priority Approval: _____ (1. GL or BGL; 2. or 3. AGL; 4. or 5. SL)

Method of Analysis Complies With: _____

Background Information Useful to Analyst (Contamination Levels, Hazards, Etc.) _____

Chain of Custody: Yes ____ (See Attached Form) No X Other Information _____

All Samples Submitted to HSE-9 Must Be Screened For Radioactivity. Samples Containing Greater Than 20 dpm Total Alpha or 100 dpm Combined Gamma/Beta Contamination Cannot Be Handled At TA-59.

Sample Number	Other I.D.	Sampling Location	Analysis Requested	Sampling Method	Sample Type	Preservative Utilized	Radioactivity Scan (dpm) Alpha	Radioactivity Scan (dpm) Beta/Gamma	Remarks
88.00353-357		35-125	VOA	G	SO	NONE			

Sampling Method: 24FC=24 Hour Flow-Weighted Composite; 24TC=24 Hour Time-Weighted Composite; G=Grab; B=Bail; D=Drill; C=Core; P=Pump; O=Other (Please Specify)

Sample Type: E-Effluent; SL=Sludge: SO=Soil; SC-Soil Core; WW-Well Water; SW=Surface Water; O=Other

Preservative: F=Filtered; NF=Non-Filtered; NA=Non Acidified; A-H_2SO_4(2 ml/l); A-HNO_3(5 ml/l); A HNO_3(5 ml/l); A H_3PO_4 & $CuSO_4$; A-Other; I=Iced; P-NaOH.

HSE-9 ORGANIC ANALYSIS SECTION
VOLATILE ORGANICS RESULT SHEET
SOIL ANALYSIS

SAMPLE NUMBER: 88.60353 REQUEST SHEET: 88.7067
NUMBER OF REPLICATE RUNS: 2

SURROGATE SPIKE RECOVERIES: (% RECOVERY)

COMPOUND		ACCEPTABLE RANGE (CLP)
1,2-DICHLOROETHANE d4	128.0/130.6	(76-114)
TOLUENE d8	118.3/116.4	(88-110)
p-BROMOFLUOROBENZENE	96.6/96.7	(86-115)
BROMOBENZENE	139.6/54.5	(SPIKED ONTO SOIL PRIOR TO EXTRACTION, NOT A CLP REQUIRED SURROGATE)

CAS #	COMPOUND	RESULT +/- (ppb)		MDL (ug/gm)
74873	CHLOROMETHANE	<MDL		10.0
73839	BROMOMETHANE			10.0
75014	VINYL CHLORIDE			10.0
75003	CHLOROETHANE			10.0
75092	METHYLENE CHLORIDE			10.0
75150	CARBON DISULFIDE			10.0
75354	1,1-DICHLOROETHENE			10.0
75343	1,1-DICHLOROETHANE			10.0
540590	1,2-DICHLOROETHENE		(TOTAL)	10.0
67663	CHLOROFORM			10.0
107062	1,2-DICHLOROETHANE			10.0
78933	2-BUTANONE			10.0
71556	1,1,1-TRICHLOROETHANE			10.0
56235	CARBON TETRACHLORIDE			10.0
108054	VINYL ACETATE			10.0
75274	BROMODICHLOROMETHANE			10.0
78875	1,2-DICHLOROPROPANE			10.0
10061015	cis-1,3-DICHLOROPROPENE			10.0
79016	TRICHLOROETHENE			10.0
124481	DIBROMOCHLOROMETHANE			10.0
79005	1,1,2-TRICHLOROETHANE			10.0
71432	BENZENE			10.0
10061026	trans-1,3-DICHLOROPROPENE			10.0
75252	BROMOFORM			10.0
108101	4-METHYL-2-PENTANONE			10.0
591786	2-HEXANONE			10.0
127184	TETRACHLOROETHENE			10.0
79345	1,1,2,2-TETRACHLOROETHANE			10.0
108883	TOLUENE			10.0
108907	CHLOROBENZENE			10.0
100414	ETHYLBENZENE			10.0
100425	STYRENE			10.0
133027	XYLENES		(TOTAL)	10.0

95501	1,2-DICHLOROBENZENE	<MDL	10.0
541731	1,3-DICHLOROBENZENE		10.0
106467	1,4-DICHLOROBENZENE		10.0
91023	NAPHTHALENE		10.0
104518	n-BUTYLBENZENE		10.0
108861	BROMOBENZENE		10.0
95498	2-CHLOROTOLUENE		10.0
106434	4-CHLOROTOLUENE		10.0
142289	1,3-DICHLOROPROPANE		10.0
87683	HEXACHLOROBUTADIENE		10.0
630206	1,1,1,2-TETRACHLOROETHANE		10.0
120821	1,2,4-TRICHLOROBENZENE		10.0
96184	1,2,3-TRICHLOROPROPANE		10.0
95636	1,2,4-TRIMETHYLBENZENE		10.0
75694	TRICHLOROFLUOROMETHANE		10.0
106934	1,2-DIBROMOETHANE		10.0
98828	ISOPROPYLBENZENE		10.0
98066	t-BUTYLBENZENE		10.0
135988	s-BUTYLBENZENE		10.0
99876	p-ISOPROPYLTOLUENE		10.0
544105	1-CHLOROHEXANE		10.0
563586	1,1-DICHLOROPROPENE		10.0
108703	1,3,5-TRICHLOROBENZENE		10.0
96128	1,2-DIBROMO-3-CHLOROPROPANE		10.0
67641	ACETONE	TRACE	10.0
60297	DIETHYL ETHER	<MDL	10.0
76131	1,1,2-TRICHLORO-1,2,2-TRIFLUOROETHANE	<MDL	10.0

MDL: Estimated minimum detection limit. The minimum limit of quantitation for these samples was approximately 20 ppm (ug/gm of soil). A recovery of 10% was assumed.

All results are reported with a corresponding uncertainty. Values close to the MDL have larger uncertainties associated with them. If a sample is run at least in triplicate, the reported uncertainty represents the standard deviation of these values.

Acetone is a common laboratory and glassware contaminent

SAMPLE NUMBER: 88-003538 REQUEST SHEET NUMBER: 88.7067

B-2

EXTRACTION PROCEDURE TOXICITY ANALYSES

00.00350 - 35-85 water
345 - 35-85 water
350 - 35-85 sludge

Oil pits ET-10X METALS

********** HSE-9 ANALYTICAL REPORT **********

Prepared by: M.C. WILLIAMS on 27-Jun-1988

REQUEST NUMBER: 6691 ANALYSIS: HG MATRIX: W OWNER: AG

SAMPLE NUM	SYMBOL	RESULT	UNCERTAINTY	UNITS	COMPLETION DATE	COMMENT
88.00336 .		1.9000	0.4000	UG/L	6/24/88	
88.00345 .		< 0.5000	0.5000	UG/L	6/27/88	
88.00345 .		< 0.5000	0.5000	UG/L	6/27/88	
88.00350 .		11.0000	2.0000	UG/KG	6/27/88	

********** HSE-9 QUALITY ASSURANCE REPORT *********

Prepared by: M.C. WILLIAMS on 27-Jun-1988

REQUEST NUMBER: 6691 ANALYSIS: HG MATRIX: W OWNER: AG

SAMPLE NUM	SYMBOL	RESULT	UNCERTAINTY	UNITS	CERTIFIED VALUE	CERTIFIED VALUE UNCERTAINTY	COMPLETION DATE	COMMENT
00.00595 .		1.4300	0.2900	UG/L	1.4900	0.0600	6/24/88	UNDER CONTROL
00.00595 .		1.5600	0.3100	UG/L	1.4900	0.0600	6/24/88	UNDER CONTROL

MC Williams
Analyst

Section Leader

mag
QA Officer

6-27-88
Date

6/28/88
Date

6/29/88
Date

The control status of the preceeding data were evaluated using the standard statistical criteria set forth in 'Quality Assurance for Health and Environmental Chemistry: 1986,' LA-11114-MS, pp. 3-4.

********** HSE-9 ANALYTICAL REPORT **********

Prepared by: M.C. WILLIAMS on 27-Jun-1988

REQUEST NUMBER: 6691 ANALYSIS: AG MATRIX: W OWNER: AG

SAMPLE NUM	SYMBOL	RESULT	UNCERTAINTY	UNITS	COMPLETION DATE	COMMENT
88.00336 .		0.0030	0.0030	MG/L	6/24/88	
88.00345 .		< 0.0030	0.0030	MG/L	6/24/88	
88.00350 .		0.3100	0.0600	MG/KG	6/27/88	

********** HSE-9 QUALITY ASSURANCE REPORT *********

Prepared by: M.C. WILLIAMS on 27-Jun-1988

REQUEST NUMBER: 6691 ANALYSIS: AG MATRIX: W OWNER: AG

SAMPLE NUM	SYMBOL	RESULT	UNCERTAINTY	UNITS	CERTIFIED VALUE	CERTIFIED VALUE UNCERTAINTY	COMPLETION DATE	COMMENT
00.01136 .		10.0000	3.0000	UG/L	10.0000	1.1800	6/24/88	UNDER CONTROL
00.01136 .		11.0000	3.0000	UG/L	10.0000	1.1800	6/24/88	UNDER CONTROL
00.97261 .		498.0000	50.0000	UG/L	500.0000	50.0000	6/24/88	UNDER CONTROL
00.97261 .		503.0000	50.0000	UG/L	500.0000	50.0000	6/24/88	UNDER CONTROL

Analyst	Section Leader	QA Officer
6-28-88	6/28/88	6/29/88
Date	Date	Date

The control status of the preceeding data were evaluated using the standard statistical criteria set forth in 'Quality Assurance for Health and Environmental Chemistry: 1986,' LA-11114-MS, pp. 3-4.

********** HSE-9 ANALYTICAL REPORT **********

Prepared by: M.C. WILLIAMS on 27-Jun-1988

REQUEST NUMBER: 6691 ANALYSIS: AS MATRIX: W OWNER: AG

SAMPLE NUM	SYMBOL	RESULT	UNCERTAINTY	UNITS	COMPLETION DATE	COMMENT
88.00336 .		2.5000	1.0000	UG/L	6/24/88	
88.00345 .		5.5000	1.1000	UG/L	6/24/88	
88.00350 .		0.3000	0.0600	MG/KG	6/27/88	

********** HSE-9 QUALITY ASSURANCE REPORT *********

Prepared by: M.C. WILLIAMS on 27-Jun-1988

REQUEST NUMBER: 6691 ANALYSIS: AS MATRIX: W OWNER: AG

SAMPLE NUM	SYMBOL	RESULT	UNCERTAINTY	UNITS	CERTIFIED VALUE	CERTIFIED VALUE UNCERTAINTY	COMPLETION DATE	COMMENT
00.01010 .		27.5000	5.5000	UG/L	27.0000	3.0000	6/24/88	UNDER CONTROL
00.01010 .		31.9000	6.4000	UG/L	27.0000	3.0000	6/24/88	UNDER CONTROL

Analyst	Section Leader	QA Officer
6-28-88	6/28/88	6/29/88
Date	Date	Date

The control status of the preceeding data were evaluated using the standard statistical criteria set forth in 'Quality Assurance for Health and Environmental Chemistry: 1986,' LA-11114-MS, pp. 3-4.

********** HSE-9 ANALYTICAL REPORT **********

Prepared by: M.C. WILLIAMS on 27-Jun-1988

REQUEST NUMBER: 6691 ANALYSIS: CR MATRIX: W OWNER: AG

SAMPLE NUM	SYMBOL	RESULT	UNCERTAINTY	UNITS	COMPLETION DATE	COMMENT
88.00336 .		2.6000	0.5000	UG/L	6/24/88	
88.00345 .		6.0000	1.0000	UG/L	6/24/88	
88.00350 .		2.4000	0.5000	MG/KG	6/27/88	

********** HSE-9 QUALITY ASSURANCE REPORT *********

Prepared by: M.C. WILLIAMS on 27-Jun-1988

REQUEST NUMBER: 6691 ANALYSIS: CR MATRIX: W OWNER: AG

SAMPLE NUM	SYMBOL	RESULT	UNCERTAINTY	UNITS	CERTIFIED VALUE	CERTIFIED VALUE UNCERTAINTY	COMPLETION DATE	COMMENT
00.01030 .		103.0000	10.0000	UG/L	100.0000	10.2000	6/24/88	UNDER CONTROL
00.01030 .		96.9000	9.7000	UG/L	100.0000	10.2000	6/24/88	UNDER CONTROL
00.01030 .		118.0000	12.0000	UG/L	100.0000	10.2000	6/24/88	WARNING 1-2 SIG

Analyst	Section Leader	QA Officer
6-28-88	6/28/88	6/29/88
Date	Date	Date

The control status of the preceeding data were evaluated using the standard statistical criteria set forth in 'Quality Assurance for Health and Environmental Chemistry: 1986,' LA-11114-MS, pp. 3-4.

********** HSE-9 ANALYTICAL REPORT **********

Prepared by: M.C. WILLIAMS on 27-Jun-1988

REQUEST NUMBER: 6691 ANALYSIS: PB MATRIX: W OWNER: AG

SAMPLE NUM	SYMBOL	RESULT	UNCERTAINTY	UNITS	COMPLETION DATE	COMMENT
88.00336 .		65.0000	13.0000	UG/L	6/24/88	
88.00345 .		27.0000	5.0000	UG/L	6/24/88	
88.00350 .		5.2000	1.0000	MG/KG	6/27/88	

********** HSE-9 QUALITY ASSURANCE REPORT *********

Prepared by: M.C. WILLIAMS on 27-Jun-1988

REQUEST NUMBER: 6691 ANALYSIS: PB MATRIX: W OWNER: AG

SAMPLE NUM	SYMBOL	RESULT	UNCERTAINTY	UNITS	CERTIFIED VALUE	CERTIFIED VALUE UNCERTAINTY	COMPLETION DATE	COMMENT
00.01010 .		45.7000	9.1000	UG/L	43.0000	4.0000	6/24/88	UNDER CONTROL

Analyst — Section Leader — QA Officer

6-28-88 — 6/28/88 — 6/29/88

Date — Date — Date

The control status of the preceeding data were evaluated using the standard statistical criteria set forth in 'Quality Assurance for Health and Environmental Chemistry: 1986,' LA-11114-MS, pp. 3-4.

********** HSE-9 ANALYTICAL REPORT **********

Prepared by: M.C. WILLIAMS on 27-Jun-1988

REQUEST NUMBER: 6691 ANALYSIS: BA MATRIX: W OWNER: AG

SAMPLE NUM	SYMBOL	RESULT	UNCERTAINTY	UNITS	COMPLETION DATE	COMMENT
88.00336 .		< 0.1000	0.1000	MG/L	6/24/88	
88.00345 .		0.2100	0.1000	MG/L	6/27/88	
88.00345 .		0.2100	0.1000	MG/L	6/27/88	
88.00350 .		12.0000	1.0000	MG/Kg	6/27/88	

********** HSE-9 QUALITY ASSURANCE REPORT *********

Prepared by: M.C. WILLIAMS on 27-Jun-1988

REQUEST NUMBER: 6691 ANALYSIS: BA MATRIX: W OWNER: AG

SAMPLE NUM	SYMBOL	RESULT	UNCERTAINTY	UNITS	CERTIFIED VALUE	CERTIFIED VALUE UNCERTAINTY	COMPLETION DATE	COMMENT
00.01026 .		1.2900	0.1300	MG/L	1.2000	0.0800	6/24/88	UNDER CONTROL
00.01026 .		1.2100	0.1200	MG/L	1.2000	0.0800	6/24/88	UNDER CONTROL
00.01026 .		1.2300	0.1200	MG/L	1.2000	0.0800	6/24/88	UNDER CONTROL

Analyst	Section Leader	QA Officer
6-28-88	6/28/88	6/29/88
Date	Date	Date

The control status of the preceeding data were evaluated using the standard statistical criteria set forth in 'Quality Assurance for Health and Environmental Chemistry: 1986,' LA-11114-MS, pp. 3-4.

********** HSE-9 ANALYTICAL REPORT **********

Prepared by: M.C. WILLIAMS on 27-Jun-1988

REQUEST NUMBER: 6691 ANALYSIS: SE MATRIX: W OWNER: AG

SAMPLE NUM	SYMBOL	RESULT	UNCERTAINTY	UNITS	COMPLETION DATE	COMMENT
88.00336 .		< 1.0000	1.0000	UG/L	6/24/88	
88.00345 .		< 1.0000	1.0000	UG/L	6/24/88	
88.00350 .		27.0000	5.0000	UG/KG	6/27/88	

********** HSE-9 QUALITY ASSURANCE REPORT *********

Prepared by: M.C. WILLIAMS on 27-Jun-1988

REQUEST NUMBER: 6691 ANALYSIS: SE MATRIX: W OWNER: AG

SAMPLE NUM	SYMBOL	RESULT	UNCERTAINTY	UNITS	CERTIFIED VALUE	CERTIFIED VALUE UNCERTAINTY	COMPLETION DATE	COMMENT
00.01010 .		10.1000	2.0000	UG/L	11.0000	2.0000	6/24/88	UNDER CONTROL
00.01010 .		7.8000	1.5000	UG/L	11.0000	2.0000	6/24/88	WARNING 1-2 SIG

Analyst	Section Leader	QA Officer
6-28-88	6/28/88	6/29/88
Date	Date	Date

The control status of the preceeding data were evaluated using the standard statistical criteria set forth in 'Quality Assurance for Health and Environmental Chemistry: 1986,' LA-11114-MS, pp. 3-4.

********** HSE-9 ANALYTICAL REPORT **********

Prepared by: M.C. WILLIAMS on 27-Jun-1988

REQUEST NUMBER: 6691 ANALYSIS: CD MATRIX: W OWNER: AG

SAMPLE NUM	SYMBOL	RESULT	UNCERTAINTY	UNITS	COMPLETION DATE	COMMENT
88.00336 .		1.7000	0.2000	~~MG~~ ug/L	6/24/88	
88.00345 .		2.6000	0.5000	UG/L	6/27/88	
88.00350 .		0.1800	0.0400	MG/KG	6/27/88	

********** HSE-9 QUALITY ASSURANCE REPORT *********

Prepared by: M.C. WILLIAMS on 27-Jun-1988

REQUEST NUMBER: 6691 ANALYSIS: CD MATRIX: W OWNER: AG

SAMPLE NUM	SYMBOL	RESULT	UNCERTAINTY	UNITS	CERTIFIED VALUE	CERTIFIED VALUE UNCERTAINTY	COMPLETION DATE	COMMENT
00.01010 .		9.7700	2.0000	UG/L	9.0000	1.0000	6/24/88	UNDER CONTROL

Analyst	Section Leader	QA Officer
6-28-88	6/28/88	6/29/88
Date	Date	Date

The control status of the preceeding data were evaluated using the standard statistical criteria set forth in 'Quality Assurance for Health and Environmental Chemistry: 1986,' LA-11114-MS, pp. 3-4.

B-3

RADIOLOGICAL ANALYSES

Oil pits TA-35

********** HSE-9 ANALYTICAL REPORT **********

Prepared by: G. BROOKS on 21-Jun-1988

REQUEST NUMBER: 7294 ANALYSIS: ALPHA MATRIX: WW OWNER: AG

	SAMPLE NUM	SYMBOL	RESULT	UNCERTAINTY	UNITS	COMPLETION DATE	COMMENT
125	88.00351	.	5.0000	1.0000	PCI/L	6/21/88	
85	88.00352	.	10.0000	2.0000	PCI/L	6/21/88	

********** HSE-9 QUALITY ASSURANCE REPORT *********

Prepared by: G. BROOKS on 21-Jun-1988

REQUEST NUMBER: 7294 ANALYSIS: ALPHA MATRIX: WW OWNER: AG

There were no Quality Assurance materials run with the samples reported above for one of the following reasons:

____ No QA samples for this constituent and matrix type available within HSE-9

____ Only qualitative data requested

GB		
Analyst	Section Leader	QA Officer
6/21/88		
Date	Date	Date

********** HSE-9 ANALYTICAL REPORT **********

Prepared by: G. BROOKS on 21-Jun-1988

REQUEST NUMBER: 7294 ANALYSIS: BETA MATRIX: WW OWNER: AG

SAMPLE NUM	SYMBOL	RESULT	UNCERTAINTY	UNITS	COMPLETION DATE	COMMENT
88.00351	.	4.9000	0.7000	PCI/L	6/21/88	
88.00352	.	5.6000	0.7000	PCI/L	6/21/88	

********** HSE-9 QUALITY ASSURANCE REPORT *********

Prepared by: G. BROOKS on 21-Jun-1988

REQUEST NUMBER: 7294 ANALYSIS: BETA MATRIX: WW OWNER: AG

There were no Quality Assurance materials run with the samples reported above for one of the following reasons:

____ No QA samples for this constituent and matrix type available within HSE-9

____ Only qualitative data requested

Analyst	Section Leader	QA Officer
Date	Date	Date

********** HSE-9 ANALYTICAL REPORT **********

Prepared by: G. BROOKS on 20-Jun-1988

REQUEST NUMBER: 7294 ANALYSIS: GAMMA MATRIX: WW OWNER: AG

SAMPLE NUM	SYMBOL	RESULT	UNCERTAINTY	UNITS	COMPLETION DATE	COMMENT
88.00351 .	-	500.0000	200.0000	PCI/L	6/20/88	
88.00352 .	-	600.0000	200.0000	PCI/L	6/20/88	

********** HSE-9 QUALITY ASSURANCE REPORT *********

Prepared by: G. BROOKS on 20-Jun-1988

REQUEST NUMBER: 7294 ANALYSIS: GAMMA MATRIX: WW OWNER: AG

SAMPLE NUM	SYMBOL	RESULT	UNCERTAINTY	UNITS	CERTIFIED VALUE	CERTIFIED VALUE UNCERTAINTY	COMPLETION DATE	COMMENT
00.00760 .		1300.0000	200.0000	PCI/L	1465.0000	80.0000	6/20/88	UNDER CONTROL
00.00760 .		1200.0000	200.0000	PCI/L	1465.0000	80.0000	6/20/88	WARNING 1-2 SIG
00.00760 .		1300.0000	200.0000	PCI/L	1465.0000	80.0000	6/20/88	UNDER CONTROL

GB		mag
Analyst	Section Leader	QA Officer
6/20/88		6/20/88
Date	Date	Date

The control status of the preceeding data were evaluated using the standard statistical criteria set forth in 'Quality Assurance for Health and Environmental Chemistry: 1986,' LA-11114-MS, pp. 3-4.

B-4

POLYCHLORINATED BIPHENYL ANALYSES

REQUESTOR DATA SHEET # _____

Log Book _____ Page _____

Sampled by R. Rabin Collection Date 9/8/86 Time 09:30 Weather _____ Witness _____

Presampling Conference Completed With D. Seaty On 9/8/86 Send Report To Roy Rabin MS K-490

Phone 5-0452 Source of Sample: 35-125, 35-85 Reason for Sampling oil cleanup

Group ~~HSE-8~~ PDO Site 35 Building 125 + 85 Room No. _____

Priority Assigned: 1. Emergency; 2. Recognized Danger; (3.) Imminent Deadline; 4. Special Survey; 5. Routine;

(Circle One) Priority Approval: _____ (1. GL or DGL; 2. or 3. AGL; 4. or 5. SL)

Method of Analysis Complies With: _____

Background Information Useful to Analyst (Contamination Levels, Hazards, Etc.) Suspect no PCB's

Chain of Custody: Yes _____ (See Attached Form) No _____ Other Information _____

All Samples Submitted to HSE-9 Must Be Screened For Radioactivity. Samples Containing Greater Than 20 dpm Total Alpha or 100 dpm Combined Gamma/Beta Contamination Cannot Be Handled At TA-59.

Sample Number	Other I.D.	Sampling Location	Analysis Requested	Sampling Method	Sample Type	Preservative Utilized	Radioactivity Scan (dpm) Alpha	Radioactivity Scan (dpm) Beta/Gamma	Remarks
* 86-05274		35-125	PCB	grab	oil/water	NONE	NA	NA	
86-05275		35-85	"	"	"	"	"	"	

Sampling Method: 24FC=24 Hour Flow-Weighted Composite; 24TC=24 Hour Time-Weighted Composite; G=Grab; B=Bail; D=Drill; C=Core; P=Pump; O=Other (Please Specify)

Sample Type: E=Effluent; SL=Sludge: SO=Soil; SC-Soil Core; WW-Well Water; SW=Surface Water; O=Other

Preservative: F=Filtered; NF=Non-Filtered; NA=Non Acidified; A-H_2SO_4(2 ml/l); A-HNO_3(5 ml/l); A-HNO_3(5 ml/l); A-H_3PO_4 & $CuSO_4$; A-Other; I=Iced; P-NaOH.

ANALYSIS DATA SHEET 5875

Post Sampling Conference Completed With _____ and Samples Submitted On _____ Time _____

Due _____ Project # _____ Estimate of Time Involved _____ Actual Time _____

Analytical Results and Remarks _____

If Chain of Custody, Seal(s) Intact: Yes___ No___ Seal(s) Broken By: _____ Date _____

Printed Data Output Attached: Yes___ No___ Other Sheets Attached: Yes___ No___ (DE=Date Extracted, DA=Date Analyzed)

Sample Number	DE/DA	Compound	CAS #	Analytical Result (Units)	Analytical Uncertainty	MDL	Comments
RL. 055274			1336363	< MDL	± 25%	20 µg/g	oil catch basin
055275			1336363	< MDL	± 25%	20 µg/g	

Approved By: Analyst [signature] Notebook AC03090 Page 31 Date 9/9/86 QC Coordinator _____

Section Leader [signature] Date 9/11 Computer Entry _____ Date _____

0112S (002S)

REQUESTOR DATA SHEET # 6343

Log Book _____ Page _____

Sampled by Roy Bohn Collection Date 7/29/87 Time _____ Weather _____ Witness _____

Presampling Conference Completed With _____ On _____ Send Report To Roy Bohn MS K490

Phone 5-0452 Source of Sample: TA-35 oil Basins Reason for Sampling discharge Ponds

Group CLS Site 35 Building 125 + 85 Room No. OUTSIDE

Priority Assigned: 1. Emergency; (2) Recognized Danger; 3. Imminent Deadline; 4. Special Survey; 5. Routine;

(Circle One) Priority Approval: _____ (1. GL or BGL; 2. or 3. AGL; 4. or 5. SL)

Method of Analysis Complies With: _____

Background Information Useful to Analyst (Contamination Levels, Hazards, Etc.) Suspect no PCB's

Chain of Custody: Yes _____ (See Attached Form) No _____ Other Information _____

All Samples Submitted to HSE-9 Must Be Screened For Radioactivity. Samples Containing Greater Than 20 dpm Total Alpha or 100 dpm Combined Gamma/Beta Contamination Cannot Be Handled At TA-59.

Sample Number	Other I.D.	Sampling Location	Analysis Requested	Sampling Method	Sample Type	Preservative Utilized	Radioactivity Scan (dpm) Alpha	Radioactivity Scan (dpm) Beta/Gamma	Remarks
~~87-0142~~									
~~87-0143~~									
* 87-01842		35-125	PCB	grab	oil	none	na	na	
87-01843		35-85	↓	↓	↓	↓	↓	↓	

Sampling Method: 24FC=24 Hour Flow-Weighted Composite; 24TC=24 Hour Time-Weighted Composite; G=Grab; B=Ball; D=Drill; C=Core; P=Pump; O=Other (Please Specify)

Sample Type: E=Effluent; SL=Sludge: SO=Soil; SC-Soil Core; WW-Well Water; SW=Surface Water; O=Other

Preservative: F=Filtered; NF=Non-Filtered; NA=Non Acidified; A-H_2SO_4(2 ml/l); A-HNO_3(5 ml/l); A HNO_3(5 ml/l); A H_3PO_4 & $CuSO_4$; A-Other; I=Iced; P-NaOH.

ANALYSIS DATA SHEET # 6343

Post Sampling Conference Completed With _____ and Samples Submitted On _____ Time _____

Due _____ Project # _____ Estimate of Time Involved _____ Actual Time _____

Analytical Results and Remarks _____

If Chain of Custody, Seal(s) Intact: Yes___ No___ Seal(s) Broken By: _____ Date _____

Printed Data Output Attached: Yes___ No___ Other Sheets Attached: Yes___ No___ (DE=Date Extracted, DA=Date Analyzed)

Sample Number	DE/DA	Compound	CAS #	Analytical Result (Units)	Analytical Uncertainty	MDL	Comments
87.01842			1336363	< MDL	± 0.1 ug/g	1.3 ug/g	
87.01843			1336363	< MDL	± 0.1 ug/g	1.1 ug/g	add % Rec
00.97416		1260	11096825	18.6 ug/g	± 2.0 ug/g	1.2 ug/g	21.4 87

Approved By: Analyst Barbara Hemberger Notebook Bk #12 A003092 Page 98 Date 7/30/87 QC Coordinator mag 8/4/87

Section Leader [signature] Date 8.4.87 Computer Entry _____ Date _____

01125 (0025)

REQUESTOR DATA SHEET # _____

Sampled by Roy Bohn Collection Date 12/4/86 Time 1030 Weather _____ Log Book _____ Page _____ Witness _____

Presampling Conference Completed With Dee Sietz On 12/4/86 Send Report To R. Bohn MS K-490

Phone 5-0452 Source of Sample: In site canyon Reason for Sampling PCB analysis

Group ~~ER~~ CLS-7 Site 35 Building 125 Room No. OUTSIDE

Priority Assigned: 1. Emergency; 2. Recognized Danger; 3. Imminent Deadline; 4. Special Survey; 5. Routine;

(Circle One) Priority Approval: _____ (1. GL or DGL; 2. or 3. AGL; 4. or 5 SL) ASAP

Method of Analysis Complies With: _____

Background Information Useful to Analyst (Contamination Levels, Hazards, Etc.) _____

Chain of Custody: Yes _____ (See Attached Form) No _____ Other Information _____

All Samples Submitted to HSE-9 Must Be Screened For Radioactivity. Samples Containing Greater Than 20 dpm Total Alpha or 100 dpm Combined Gamma/Beta Contamination Cannot Be Handled At TA-59.

Sample Number	Other I.D.	Sampling Location	Analysis Requested	Sampling Method	Sample Type	Preservative Utilized	Radioactivity Scan (dpm) Alpha	Radioactivity Scan (dpm) Beta/Gamma	Remarks
86.05286		In site	PCB	grab	soil	none	NA	NA	
86.05287		canyon	↓	↓	↓	↓	↓	↓	
86.05288			↓	↓	↓	↓	↓	↓	

Sampling Method: 24FC=24 Hour Flow-Weighted Composite; 24TC=24 Hour Time-Weighted Composite; G=Grab; B=Ball; D=Drill; C=Core; P=Pump; O=Other (Please Specify)

Sample Type: E=Effluent; SL=Sludge: SO=Soil; SC-Soil Core; WW-Well Water; SW=Surface Water; O=Other

Preservative: F=Filtered; NF=Non-Filtered; NA=Non Acidified; A-H_2SO_4(2 ml/l); A-HNO_3(5 ml/l); A-HNO_3(5 ml/l); A-H_3PO_4 & $CuSO_4$; A-Other; I=Iced; P-NaOH.

ANALYSIS DATA SHEET # 5352

Post Sampling Conference Completed With _____ and Samples Submitted On _____ Time _____

Due _____ Project # _____ Estimate of Time Involved _____ Actual Time _____

Analytical Results and Remarks _____

If Chain of Custody, Seal(s) Intact: Yes___ No___ Seal(s) Broken By: _____ Date _____

Printed Data Output Attached: Yes___ No___ Other Sheets Attached: Yes___ No___ (DE=Date Extracted, DA=Date Analyzed)

Sample Number	DE/DA	Compound	CAS #	Analytical Result (Units)	Analytical Uncertainty	MDL	Comments
05286		1242	53469219	4.7 µg/g	± 0.5 µg/g	1.3 µg/g	~450' down Tensite Canyon
87			53469219	11.7 µg/g	± 1.2 µg/g	1.1 µg/g	~20' " "
88			53469219	9.1 µg/g	± 0.9 µg/g	1.3 µg/g	at confluence of Tensite canyon
							and spill path
							spill occured 12/3/86

Approved By: Analyst [signature] Notebook RCRA Acc 232 Page 96 Date 12/5/86 QC Coordinator _____

Section Leader _____ Date _____ Computer Entry _____ Date _____

0112S (002S)

APPENDIX C

TA-35-TSL-125
SURFACE IMPOUNDMENT
GROUND-WATER MONITORING PLAN

TA-35-TSL-125 SURFACE IMPOUNDMENT GROUND-WATER MONITORING PLAN

In the event recoverable volumes of ground water are encountered during the soil boring program, the three test holes will be completed as ground-water monitoring wells and a fourth monitoring well added meeting requirements of EPA's RCRA Ground-Water Monitoring Technical Enforcement Guidance Document (September 1986). Drilling logs from test hole advancement will be prepared and submitted to the New Mexico Environmental Improvement Division (NMEID) to supplement existing documentation of geology and hydrology contained in the RCRA Part B Application for Los Alamos National Laboratory. Each well will be surveyed to verify its horizontal and vertical location to 0.01 feet. Depth-to-water measurements will be taken one week after each well completion to the nearest 0.01 feet using a graduated steel tape or equivalent. The elevation of the ground-water surface will be determined using the depth-to-water measurements taken at each of the wells. If contaminated ground-water is detected, the ground-water quality assessment program, as outlined in Attachment I, will be implemented.

Ground-Water Sampling

To ensure that the samples collected are representative of the ground water, monitoring wells will be purged prior to sampling, and the samples will be collected using devices that should not induce sample alteration. Well purging will be conducted according to the borehole volume removal procedure, but a check will also be made on the adequacy of the calculated purging time via measurements of pH, specific conductivity, and temperature. These measurements will be taken periodically during the calculated purging time. This extra check will give additional assurance that the stagnant well bore water has been removed from the well and that the samples collected are representative of the ground water.

After the water begins to flow from the purging pump, the well will be pumped for the length of time necessary to purge four to six well volumes and until pH, temperature, and conductivity stabilize. The pH, temperature, and conductivity of the discharged water will be measured at least three times during purging. The pH will be considered stable when two consecutive measurements agree within 0.2 pH units. Temperature will be considered stable when two

consecutive measurements agree within 0.2 degrees Centigrade. Conductivity will be considered stable when two consecutive measurements agree within ten µmhos.

If the well pumps dry while purging, the pump will be turned off and the well will be allowed to recharge. After sufficient recharge has occurred, samples will be collected with a sampling pump or bailers. All samples will be collected in EPA-approved containers and preserved in accordance with EPA methods (Table C-1).

Sample bottles will be filled slowly to prevent entrapment of any gas bubbles. For those bottles requiring no headspace, the bottle will be filled completely such that a meniscus forms. The cap will be replaced immediately and the bottle will be turned upside down, tapped a few times and checked for gas bubbles in the sample. If a gas bubble exists, the sample will be discarded and the sampling procedures repeated until a gas-free sample is obtained.

The time, date, and initials of the sampler will be entered on all sample labels. Information regarding pumping, field measurements, etc. will be entered in field logbook as it becomes available. Sample seals will be placed on each container and the container placed on ice in a cooler or ice chest.

Sample shipment and chain-of-custody record will be accompanied by a sample analysis request sheet. The request sheet has two parts: field and laboratory. The field portion of this form will be completed by the person collecting the sample and include most of the pertinent information noted in the logbook. The laboratory portion is intended to be completed by the laboratory personnel when the sample is received.

Sample Analysis

All analyses, quality assurance, and quality control will follow methods defined in SW-846 (Table C-2). The samples will be analyzed for volatile and semivolatile organic compounds, total metals, and PCBs. If ground water does not contain detectable concentrations of organic compounds or total metals in concentrations exceeding one standard deviation above background then the hazardous units will be closed "clean," and no further ground-water monitoring

will be conducted. Should ground-water contamination be indicated, the extent of contamination will be investigated and necessary remediation efforts will be implemented.

TABLE C-1

WATER SAMPLE COLLECTION METHODS

CONSTITUENT	CONTAINER TYPE	CONTAINER SIZE	PRESERVATIVE[a] TYPE	PRESERVATIVE[a] AMOUNT
Arsenic, Barium, Cadmium, Chromium, Lead, Mercury, Selenium, Silver, Nickel	Plastic	0.5 liter	HNO_3 to pH <2	5 mℓ
Volatile Organics	Glass, silica/ teflon septa	(2) 40 mℓ	---	---
Base/Neutral Extractables	Glass, silica/ teflon septa	1.0 liter	---	---
Acid Extractables	Glass, silica/ teflon septa	1.0 liter	---	---
Nitroaromatics	Glass, silica/ teflon septa	1.0 liter	---	---

[a] All samples will be cooled to 4°C upon collection.

TABLE C-2

ANALYTICAL PARAMETERS AND METHODS FOR WATER SAMPLES
COLLECTED AT TA-35-TSL-125

EPA HAZARDOUS WASTE NUMBER	METALS	EPA METHOD
D004	Arsenic	206.3
D005	Barium	208.1
D006	Cadmium	213.1
D007	Chromium	281.1
D008	Lead	239.1
D009	Mercury	245.1
D010	Selenium	270.3
D011	Silver	272.1

ORGANIC SCAN

GC/MS for volatiles	623, 624
GC/MS for base/neutral extractables	625
GC/MS for acid extractables	625
GC/MS for nitroaromatics	625

ATTACHMENT I

OUTLINE OF A GROUNDWATER QUALITY ASSESSMENT PROGRAM

DETERMINATION OF RATE AND EXTENT OF HAZARDOUS WASTE MIGRATION IN GROUNDWATER

In the event that groundwater contamination is detected in any of the downgradient monitoring wells, a program capable of determining the following would be implemented.

- Piezometers would be used to measure vertical and horizontal gradients which will in turn define the three-dimensional gradient of the groundwater system.
- Wells and piezometers would be installed in both the vertical and horizontal planes in order to determine the extent of the migration.
- Groundwater velocities would be determined by either tracer tests, borehole dilution tests, or Darcy's law.

DETERMINATION OF HAZARDOUS WASTE CONSTITUENTS

In the event that hazardous wastes are detected in the monitor wells, an assessment sampling and analysis plan would be developed for the groundwater monitoring network. This plan would include:

- The number, location and depth of wells to be sampled.
- The sampling and analytical methods to be used to identify the hazardous waste constituents.
- Evaluation procedures for water-quality data.
- An implementation schedule.

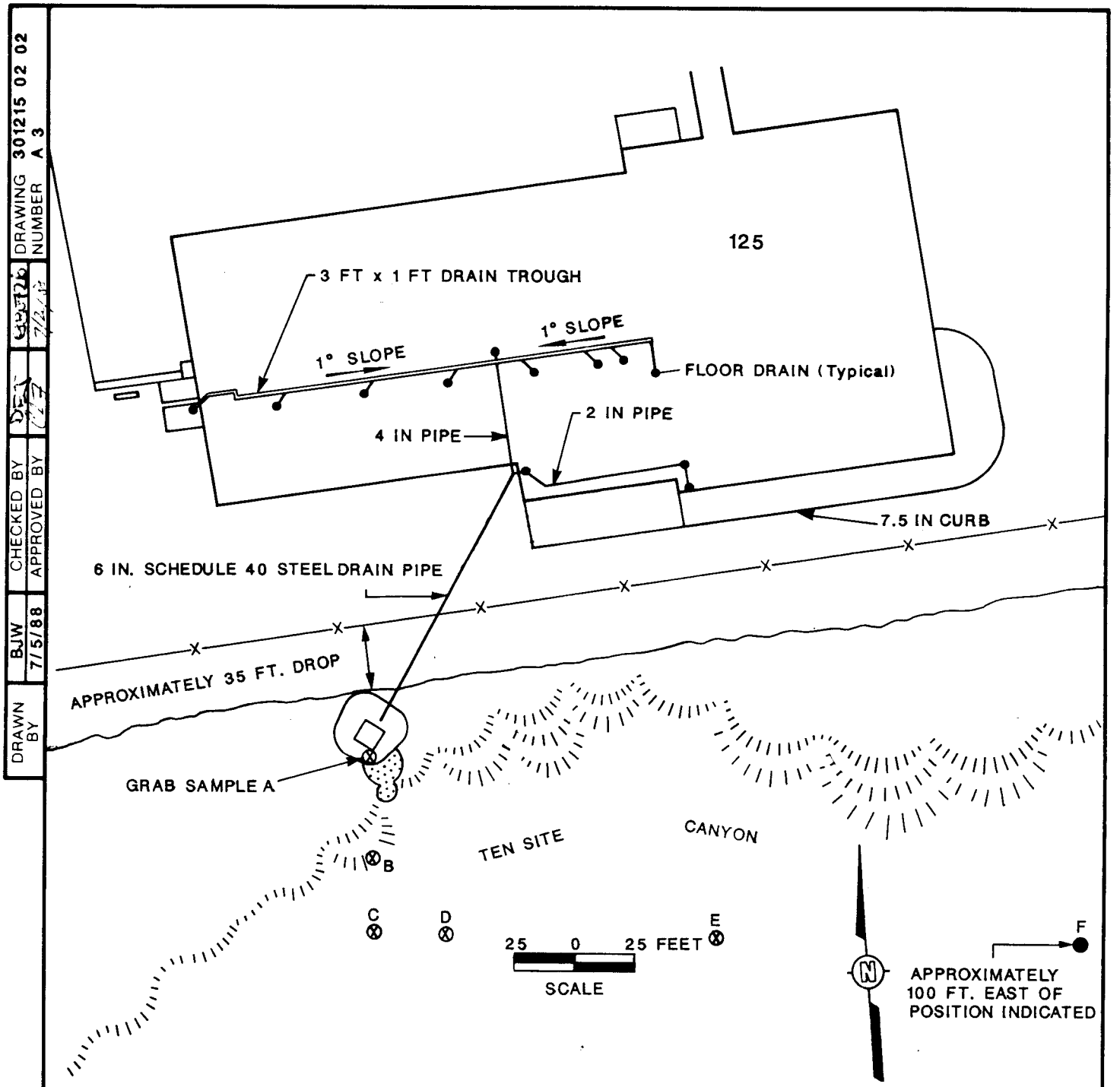

KEY

- SURFACE WATER SAMPLE LOCATION (APPROXIMATE)
- FENCE
- CLIFF
- APPROXIMATE AREA OF SOIL CONTAMINATION
- SOIL SAMPLE LOCATION (APPROXIMATE)

FIGURE 2-4

TA-35-TSL-125
SURFACE IMPOUNDMENT
AND SAMPLE LOCATIONS
PREPARED FOR
LOS ALAMOS NATIONAL LABORATORY
LOS ALAMOS, NEW MEXICO

INTERNATIONAL TECHNOLOGY CORPORATION

© 1984 IT CORPORATION
ALL COPYRIGHTS RESERVED

"Do Not Scale This Drawing"

DRAWN BY BJW 7/5/88
CHECKED BY
APPROVED BY
DRAWING NUMBER 301215 02 02 A 3

DIETZGEN 133974

DRAWN BY	CHECKED BY		DRAWING NUMBER
BJW			301215 02 02
7/1/88	APPROVED BY		A 2

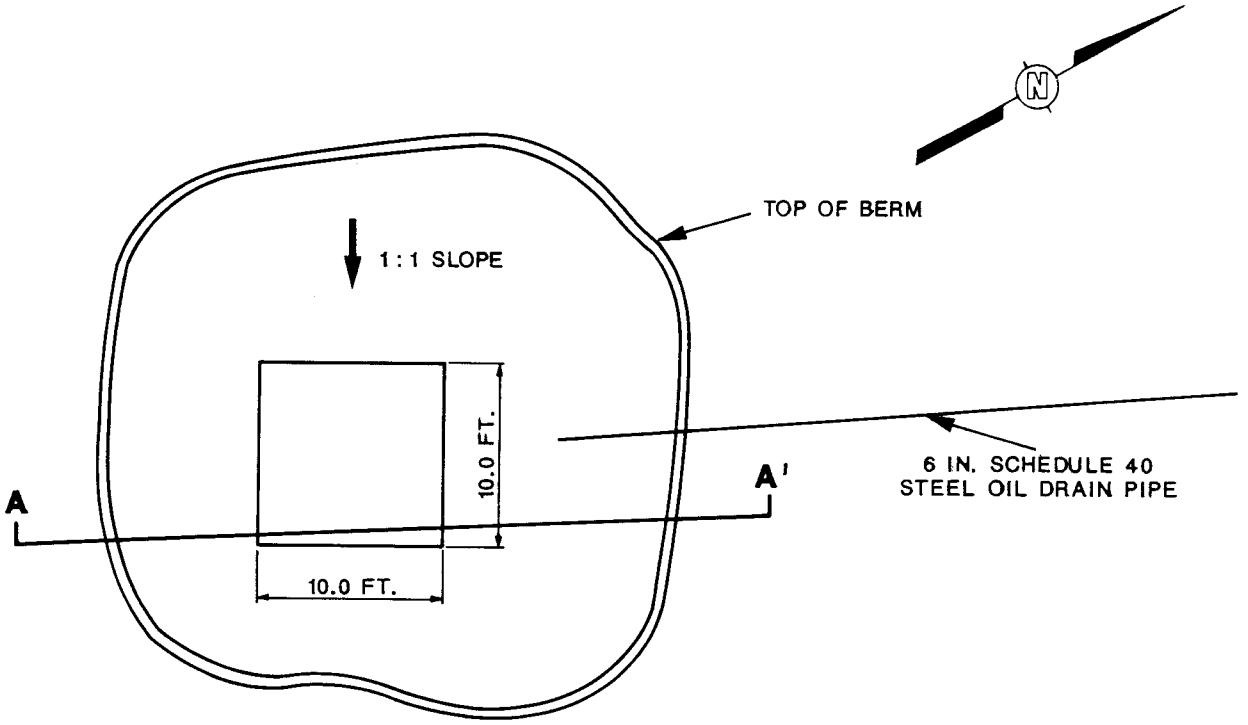

PLAN VIEW

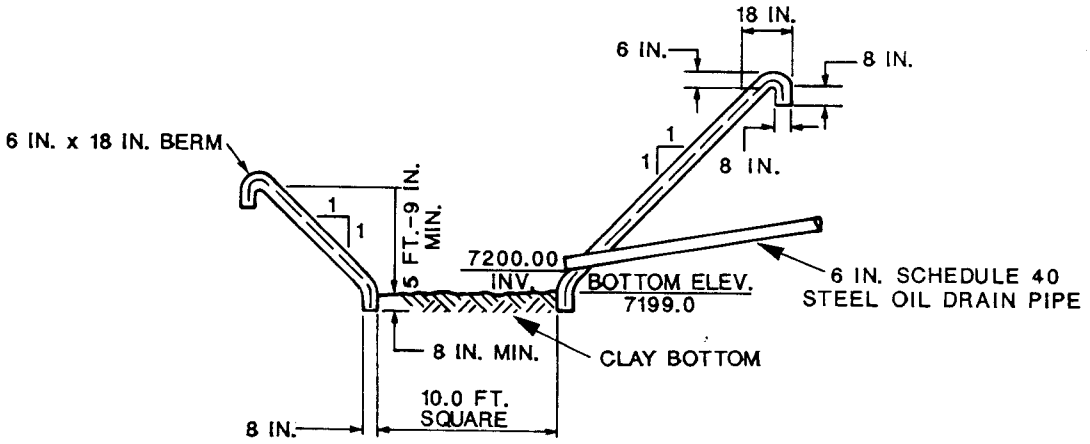

CROSS SECTIONAL VIEW

A – A'

FIGURE 2-5

ENGINEERING DRAWING OF
TA-35-TSL-125
SURFACE IMPOUNDMENT
PREPARED FOR
LOS ALAMOS NATIONAL LABORATORY
LOS ALAMOS, NEW MEXICO

© 1984 IT CORPORATION
ALL COPYRIGHTS RESERVED

INTERNATIONAL TECHNOLOGY CORPORATION

"Do Not Scale This Drawing"

DIETZGEN 11-1974

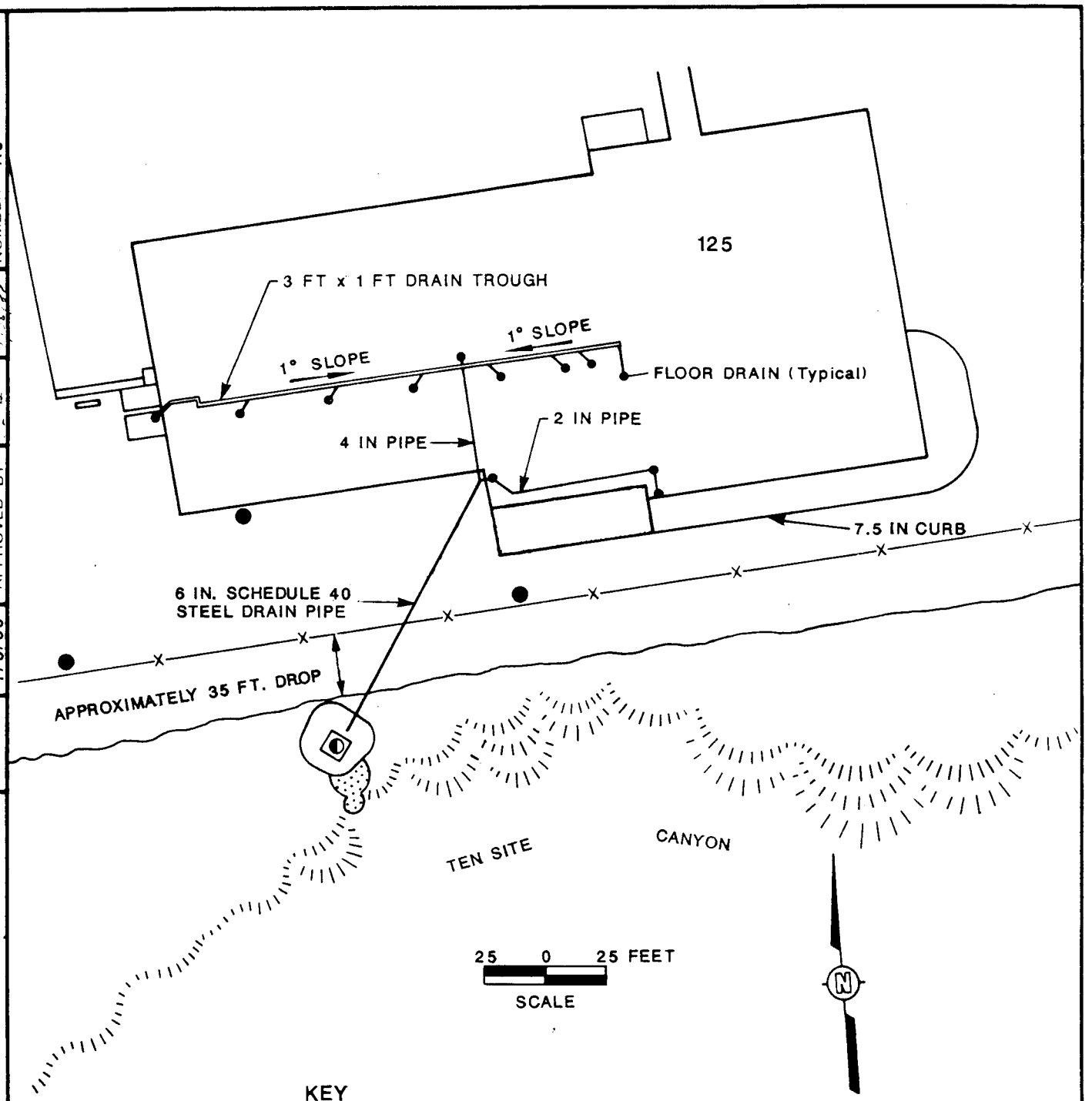

KEY

——X——	FENCE
	CLIFF
	APPROXIMATE AREA OF SOIL CONTAMINATION
	BERMED AREA
●	DEEP TEST HOLE LOCATIONS
◐	SHALLOW TEST HOLE LOCATION

FIGURE 5-1

TA-35-TSL-125
SURFACE IMPOUNDMENT AND
PROPOSED TEST HOLE LOCATIONS
PREPARED FOR
LOS ALAMOS NATIONAL LABORATORY
LOS ALAMOS, NEW MEXICO

INTERNATIONAL TECHNOLOGY CORPORATION

© 1984 IT CORPORATION
ALL COPYRIGHTS RESERVED

Do Not Scale This Drawing

DRAWN BY BJW 7/5/88 | CHECKED BY | APPROVED BY | DRAWING NUMBER 301215 02 02 A5

DIETZGEN

DRAWN BY	LLF	CHECKED BY	SWS	DRAWING NUMBER 301215.02.02 A11
	8/25/88	APPROVED BY	DES	

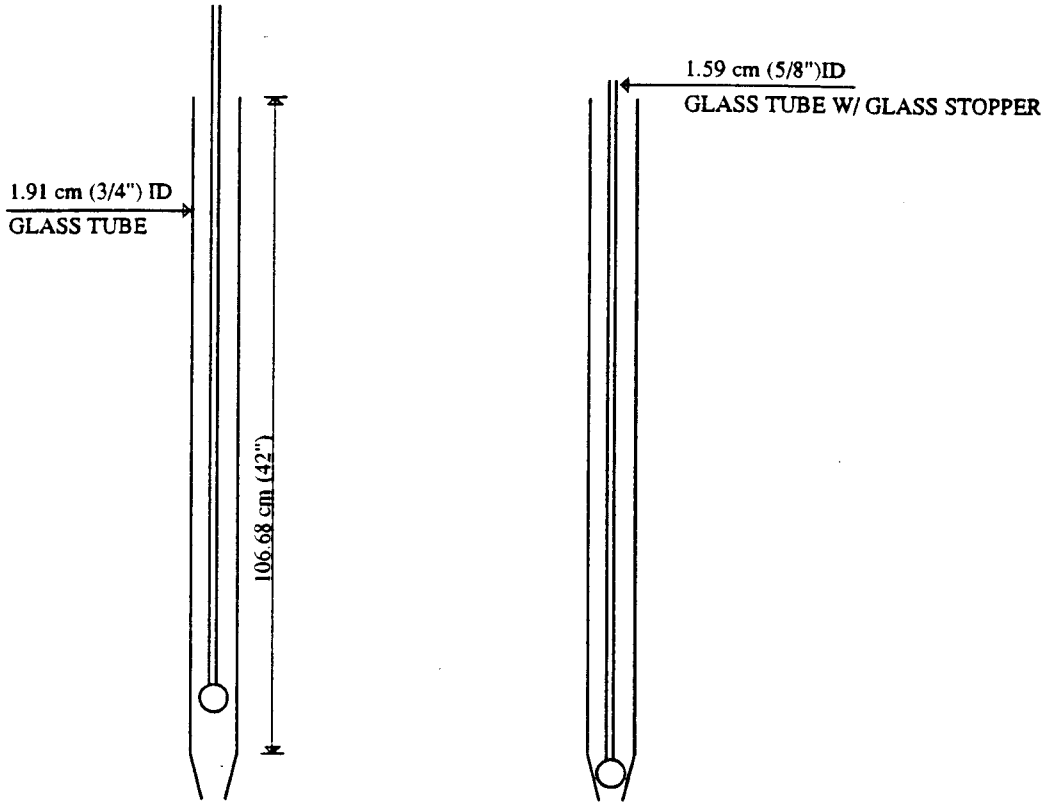

SAMPLING POSITION CLOSED POSITION

FIGURE 5-2

COMPOSITE LIQUID WASTE SAMPLER (COLIWASA)

PREPARED FOR

LOS ALAMOS NATIONAL LABORATORY
LOS ALAMOS, NEW MEXICO

INTERNATIONAL TECHNOLOGY CORPORATION

© 1984 IT CORPORATION
ALL COPYRIGHTS RESERVED

Do Not Scale This Drawing

DIETZGEN

DRAWN BY LLF 7/20/88 | CHECKED BY | APPROVED BY | DRAWING NUMBER 301215 02 02 A.6

PART I: FIELD SECTION

Collector_____ Date Sampled_____ Time_____ hours

Location of Sampling_____
name of company, disposal site, etc.

Address_____
number street city state zip

Telephone (____)_____ Company Contact_____

HML NO.. (Lab only)	COLLECTOR'S SAMPLE NO.	TYPE OF SAMPLE*	FIELD INFORMATION

Analysis Requested_____

Special Handling and/or Storage_____

PART II: LABORATORY SECTION

Received by _____ Title_____ Date_____
Sample Allocation: ___HML ___LBL ___SRL Date_____
Analysis Required_____

*Indicate whether sample is sludge, soil, etc.:**Use back of page for additional information.

FIGURE 5-3

HAZARDOUS MATERIALS
SAMPLE ANALYSIS REQUEST

PREPARED FOR

LOS ALAMOS NATIONAL LABORATORY
LOS ALAMOS, NEW MEXICO

INTERNATIONAL TECHNOLOGY CORPORATION

© 1984 IT CORPORATION
ALL COPYRIGHTS RESERVED

"Do Not Scale This Drawing"

DIETZGEN 1554-3

APPENDIX A

MANUFACTURER'S SAFETY DATA SHEETS
SHELL DIALA(R) OIL AX

Shell

MATERIAL SAFETY DATA SHEET

MSDS NUMBER ▶ 60,030-5 PAGE 1

24 HOUR EMERGENCY ASSISTANCE	GENERAL MSDS ASSISTANCE
SHELL: 713-473-9461 CHEMTREC: 800-424-9300	SHELL: 713-241-4819

ACUTE HEALTH	FIRE	REACTIVITY	HAZARD RATING ▶
1	1	0	LEAST 0 SLIGHT 1 MODERATE 2 HIGH 3 EXTREME 4

*For acute and chronic health effects refer to the discussion in Section III

BE SAFE
READ OUR PRODUCT SAFETY INFORMATION AND PASS IT ON

SECTION I

	NAME
PRODUCT ▶	SHELL DIALA(R) OIL AX
CHEMICAL NAME ▶	MIXTURE (SEE SEC II-A)
CHEMICAL FAMILY ▶	PETROLEUM HYDROCARBON; INDUSTRIAL OIL
SHELL CODE ▶	68702 69702 63702 63722

SECTION II-A PRODUCT/INGREDIENT

NO.	COMPOSITION	CAS NUMBER	PERCENT
P	SHELL DIALA OIL AX	MIXTURE	100
1	SOLVENT REFINED HYDROTREATED MIDDLE DISTILLATE	64742-46-7	60-100
2	SEVERELY HYDROTREATED LIGHT NAPHTHENIC DISTILLATE	64742-53-6	0-40
3	BUTYLATED HYDROXY TOLUENE	128-37-0	<0.2

SECTION II-B ACUTE TOXICITY DATA

NO.	ACUTE ORAL LD50	ACUTE DERMAL LD50	ACUTE INHALATION LC50
P	>10 ML/KG, RAT	>2 ML/KG, RAT	NOT AVAILABLE

BASED UPON DATA AVAILABLE TO SHELL, COMPONENT 3 IN THIS PRODUCT IS NOT HAZARDOUS UNDER OSHA HAZARD COMMUNICTION (29 CFR 1910.1200).

SECTION III HEALTH INFORMATION

THE HEALTH EFFECTS NOTED BELOW ARE CONSISTENT WITH REQUIREMENTS UNDER THE OSHA HAZARD COMMUNICATION STANDARD (29 CFR 1910.1200).

EYE CONTACT
BASED ON ESSENTIALLY SIMILAR PRODUCT TESTING PRODUCT IS PRESUMED TO BE NONIRRITATING TO THE EYES.

SKIN CONTACT
BASED ON ESSENTIALLY SIMILAR PRODUCT TESTING PRODUCT IS PRESUMED TO BE SLIGHTLY IRRITATING TO THE SKIN. PROLONGED AND REPEATED CONTACT MAY RESULT IN VARIOUS SKIN DISORDERS SUCH AS DERMATITIS, FOLLICULITIS OR OIL ACNE.

INHALATION
INHALATION OF VAPORS (GENERATED AT HIGH TEMPERATURES ONLY) OR OIL MIST MAY CAUSE A MILD IRRITATION OF THE MUCOUS MEMBRANES OF THE UPPER RESPIRATORY TRACT.

INGESTION
INGESTION OF PRODUCT MAY RESULT IN VOMITING; ASPIRATION (BREATHING OF VOMITUS INTO THE LUNGS) MUST BE AVOIDED AS EVEN SMALL QUANTITIES MAY RESULT IN ASPIRATION PNEUMONITIS.

SIGNS AND SYMPTOMS
IRRITATION AS NOTED ABOVE. ASPIRATION PNEUMONITIS MAY BE EVIDENCED BY COUGHING, LABORED BREATHING AND CYANOSIS (BLUISH SKIN); IN SEVERE CASES DEATH MAY OCCUR.

AGGRAVATED MEDICAL CONDITIONS
PREEXISTING SKIN AND RESPIRATORY DISORDERS MAY BE AGGRAVATED BY EXPOSURE TO THIS PRODUCT.

SECTION IV OCCUPATIONAL EXPOSURE LIMITS

	OSHA		ACGIH		OTHER
NO.	PEL/TWA	PEL/CEILING	TLV/TWA	TLV/STEL	
P	5 MG/M3*	NONE	5 MG/M3*	10 MG/M3*	NONE

*OIL MIST, MINERAL

SECTION V EMERGENCY AND FIRST AID PROCEDURES

EYE CONTACT
FLUSH EYES WITH WATER. IF IRRITATION OCCURS, GET MEDICAL ATTENTION.

SKIN CONTACT
REMOVE CONTAMINATED CLOTHING/SHOES AND WIPE EXCESS FROM SKIN. FLUSH SKIN WITH WATER. FOLLOW BY WASHING WITH SOAP AND WATER. IF IRRITATION OCCURS, GET MEDICAL ATTENTION.

INHALATION
REMOVE VICTIM TO FRESH AIR AND PROVIDE OXYGEN IF BREATHING IS DIFFICULT. GET MEDICAL ATTENTION.

INGESTION
DO NOT INDUCE VOMITING. IF VOMITING OCCURS SPONTANEOUSLY, KEEP HEAD BELOW HIPS TO PREVENT ASPIRATION OF LIQUID INTO THE LUNGS. GET MEDICAL ATTENTION.

NOTE TO PHYSICIAN
IF MORE THAN 2.0 ML PER KG HAS BEEN INGESTED AND VOMITING HAS NOT OCCURRED, EMESIS SHOULD BE INDUCED WITH SUPERVISION. KEEP VICTIM'S HEAD BELOW HIPS TO PREVENT ASPIRATION. IF SYMPTOMS SUCH AS LOSS OF GAG REFLEX, CONVULSIONS OR UNCONSCIOUSNESS OCCUR BEFORE EMESIS, GASTRIC LAVAGE USING A CUFFED ENDOTRACHEAL TUBE SHOULD BE CONSIDERED.

SECTION VI SUPPLEMENTAL INFORMATION

NONE IDENTIFIED.

SECTION VII PHYSICAL DATA

BOILING POINT: >300 (DEG F)

SPECIFIC GRAVITY: 0.883 (H2O=1)

VAPOR PRESSURE: NOT AVAILABLE (MM HG)

MELTING POINT: -60 (POUR POINT) (DEG F)

SOLUBILITY: NEGLIGIBLE (IN WATER)

VAPOR DENSITY: NOT AVAILABLE (AIR=1)

EVAPORATION RATE (N-BUTYL ACETATE = 1): NOT AVAILABLE

VIS CS (40 DEG C) 8.07-8.8

APPEARANCE AND ODOR: WHITE LIQUID. SLIGHT HYDROCARBON ODOR

SECTION VIII FIRE AND EXPLOSION HAZARDS

FLASH POINT AND METHOD:
295-310 DEG F (COC)

FLAMMABLE LIMITS /% VOLUME IN AIR
LOWER: N/AVA UPPER: N/AVA

EXTINGUISHING MEDIA
USE WATER FOG, FOAM, DRY CHEMICAL OR CO2. DO NOT USE A DIRECT STREAM OF WATER. PRODUCT WILL FLOAT AND CAN BE REIGNITED ON SURFACE OF WATER.

SPECIAL FIRE FIGHTING PROCEDURES AND PRECAUTIONS
MATERIAL WILL NOT BURN UNLESS PREHEATED. DO NOT ENTER CONFINED FIRE-SPACE WITHOUT FULL BUNKER GEAR (HELMET WITH FACE SHIELD, BUNKER COATS, GLOVES AND RUBBER BOOTS), INCLUDING A POSITIVE-PRESSURE NIOSH-APPROVED SELF-CONTAINED BREATHING APPARATUS. COOL FIRE EXPOSED CONTAINERS WITH WATER.

SECTION IX REACTIVITY

STABILITY: STABLE

HAZARDOUS POLYMERIZATION: WILL NOT OCCUR

CONDITIONS AND MATERIALS TO AVOID:
AVOID HEAT, OPEN FLAMES, AND OXIDIZING MATERIALS.

HAZARDOUS DECOMPOSITION PRODUCTS
THERMAL DECOMPOSITION PRODUCTS ARE HIGHLY DEPENDENT ON THE COMBUSTION CONDITIONS. A COMPLEX MIXTURE OF AIRBORNE SOLID, LIQUID, PARTICULATES AND GASES WILL EVOLVE WHEN THIS MATERIAL UNDERGOES PYROLYSIS OR COMBUSTION. CARBON MONOXIDE AND OTHER UNIDENTIFIED ORGANIC COMPOUNDS MAY BE FORMED UPON COMBUSTION.

SECTION X EMPLOYEE PROTECTION

RESPIRATORY PROTECTION
IF EXPOSURE MAY OR DOES EXCEED OCCUPATIONAL EXPOSURE LIMITS (SECTION IV) USE A NIOSH-APPROVED RESPIRATOR TO PREVENT OVEREXPOSURE. IN ACCORD WITH 29 CFR 1910.134 USE EITHER AN ATMOSPHERE-SUPPLYING RESPIRATOR OR AN AIR-PURIFYING RESPIRATOR FOR ORGANIC VAPORS AND PARTICULATES.

PROTECTIVE CLOTHING
WEAR CHEMICAL-RESISTANT GLOVES AND OTHER PROTECTIVE CLOTHING AS REQUIRED TO MINIMIZE SKIN CONTACT. NO SPECIAL EYE PROTECTION IS ROUTINELY NECESSARY. TEST DATA FROM PUBLISHED LITERATURE AND/OR GLOVE AND CLOTHING MANUFACTURERS INDICATE THE BEST PROTECTION IS PROVIDED BY NITRILE GLOVES.

SECTION XI ENVIRONMENTAL PROTECTION

SPILL OR LEAK PROCEDURES
MAY BURN ALTHOUGH NOT READILY IGNITABLE. USE CAUTIOUS JUDGMENT WHEN CLEANING UP LARGE SPILLS. *** LARGE SPILLS *** WEAR RESPIRATOR AND PROTECTIVE CLOTHING AS APPROPRIATE. SHUT OFF SOURCE OF LEAK IF SAFE TO DO SO. DIKE AND CONTAIN. REMOVE WITH VACUUM TRUCKS OR PUMP TO STORAGE SALVAGE VESSELS. SOAK UP RESIDUE WITH AN ADSORBENT SUCH AS CLAY, SAND, OR OTHER SUITABLE MATERIALS; DISPOSE OF PROPERLY. FLUSH AREA WITH WATER TO REMOVE TRACE RESIDUE. *** SMALL SPILLS *** TAKE UP WITH AN ABSORBENT MATERIAL AND DISPOSE OF PROPERLY.

WASTE DISPOSAL
PLACE IN AN APPROPRIATE DISPOSAL FACILITY IN COMPLIANCE WITH LOCAL REGULATIONS.

ENVIRONMENTAL HAZARDS
THIS PRODUCT IS CLASSIFIED AS AN OIL UNDER SECTION 311 OF THE CLEAN WATER ACT. SPILLS ENTERING (A) SURFACE WATERS OR (B) ANY WATER COURSES OR SEWERS ENTERING/LEADING TO SURFACE WATERS THAT CAUSE A SHEEN MUST BE REPORTED TO THE NATIONAL RESPONSE CENTER. 800-424-8802.

SECTION XII SPECIAL PRECAUTIONS

MINIMIZE SKIN CONTACT. WASH WITH SOAP AND WATER BEFORE EATING, DRINKING, SMOKING OR USING TOILET FACILITIES. LAUNDER CONTAMINATED CLOTHING BEFORE REUSE. PROPERLY DISPOSE OF CONTAMINATED LEATHER ARTICLES, INCLUDING SHOES, THAT CANNOT BE DECONTAMINATED.

SECTION XIII TRANSPORTATION REQUIREMENTS

DEPARTMENT OF TRANSPORTATION CLASSIFICATION: NOT HAZARDOUS BY D.O.T. REGULATIONS

SECTION XIV OTHER REGULATORY CONTROLS

THE COMPONENTS OF THIS PRODUCT ARE LISTED ON THE EPA/TSCA INVENTORY OF CHEMICAL SUBSTANCES.

THE INFORMATION CONTAINED HEREIN IS BASED ON THE DATA AVAILABLE TO US AND IS BELIEVED TO BE CORRECT. HOWEVER, SHELL MAKES NO WARRANTY, EXPRESSED OR IMPLIED REGARDING THE ACCURACY OF THESE DATA OR THE RESULTS TO BE OBTAINED FROM THE USE THEREOF. SHELL ASSUMES NO RESPONSIBILITY FOR INJURY FROM THE USE OF THE PRODUCT DESCRIBED HEREIN.

DATE PREPARED: JULY 28, 1988

JOHN P. SEPESI

SHELL OIL COMPANY
PRODUCT SAFETY AND COMPLIANCE
P. O. BOX 4320
HOUSTON, TX 77210

BE SAFE

READ OUR PRODUCT
SAFETY INFORMATION ...AND PASS IT ON
(PRODUCT LIABILITY LAW
REQUIRES IT)

APPENDIX B

CERTIFICATES OF ANALYSES

B-1

VOLATILE ORGANIC ANALYSES

HSE-9 ORGANIC ANALYSIS RESULTS
VOLATILE ORGANICS

REQUEST SHEET NUMBER: 88.7061
SAMPLE NUMBERS: 88.00328-00332, 88.00337-00342
SUBMITTER: Tony Grieggs, HSE-8
DATE: June 21, 1988
NOTEBOOK/PAGE REFERENCE: R6572 p. 90

The above samples were received on June 9, 1988. They were refrigerated until analysis which began on June 14, 1988. The samples were analyzed using purge and trap/gas chromatography/mass spectrometry. The method used closely follows EPA method 524 for the analysis of volatiles. The results obtained for each sample are attached. Sample number 88.00339 was an oil which is not amenable to purge and trap. Sample number 88.00341 was analyzed, but the matrix spike and matrix spike duplicate analyses performed on this sample failed due apparently to some type of matrix interference in the sediment that was included in the matrix spike analyses. As per Toney Drypolcher's instructions, these samples were analyzed primarily for qualitative screening. No dilutions were performed on the samples and as such, many of the quantitiatve values are reported simply as greater than values. The samples were not run in duplicate as is normally done to expedite completion. Preliminary results from the semivolatile analysis of sample number 88.00349 indicate the presence of phthalates. The hydrocarbon contamination of the sample precludes any other meaningful interpretation of the results at this time. Work will continue on the semivolatile analyses. If you wish to do more sampling for a more complete quantitatve analyses please feel free to contact me.

Please call if you have any questions.

Suzanne Bell

Suzanne Bell
HSE-9 Organic Analysis Section Leader

QA/QC Approval NA

HSE-9 ORGANIC ANALYSIS SECTION
VOLATILE ORGANICS RESULT SHEET

35-125 sludge

SAMPLE NUMBER: 88-0328 REQUEST SHEET: 88.7061
NUMBER OF REPLICATE RUNS: 1

SURROGATE SPIKE RECOVERIES: (% RECOVERY)

COMPOUND		ACCEPTABLE RANGE (CLP)
1,2-DICHLOROETHANE d4	89.6	(76-114)
TOLUENE d8	109.2	(88-110)
p-BROMOFLUOROBENZENE	75.6	(86-115)

CAS #	COMPOUND	RESULT +/- (ppb)		MDL (ppb)
74873	CHLOROMETHANE			5.0
73839	BROMOMETHANE			5.0
75014	VINYL CHLORIDE			5.0
75003	CHLOROETHANE			5.0
75092	METHYLENE CHLORIDE	>MDL (TIC)		5.0
75150	CARBON DISULFIDE			5.0
75354	1,1-DICHLOROETHENE			5.0
75343	1,1-DICHLOROETHANE			5.0
540590	1,2-DICHLOROETHENE		(TOTAL)	5.0
67663	CHLOROFORM			5.0
107062	1,2-DICHLOROETHANE			5.0
78933	2-BUTANONE	48.1 ± 4.8		5.0
71556	1,1,1-TRICHLOROETHANE	151.2 ± 15.1		5.0
56235	CARBON TETRACHLORIDE			5.0
108054	VINYL ACETATE			5.0
75274	BROMODICHLOROMETHANE			5.0
78875	1,2-DICHLOROPROPANE			5.0
10061015	cis-1,3-DICHLOROPROPENE			5.0
79016	TRICHLOROETHENE			5.0
124481	DIBROMOCHLOROMETHANE			5.0
79005	1,1,2-TRICHLOROETHANE			5.0
71432	BENZENE			5.0
10061026	trans-1,3-DICHLOROPROPENE			5.0
75252	BROMOFORM			5.0
108101	4-METHYL-2-PENTANONE	20.0 ± 20.0		5.0
591786	2-HEXANONE	35.3 ± 3.5		5.0
127184	TETRACHLOROETHENE	89.4 ± 8.9		5.0
79345	1,1,2,2-TETRACHLOROETHANE			5.0
108883	TOLUENE			5.0
108907	CHLOROBENZENE			5.0
100414	ETHYLBENZENE			5.0
100425	STYRENE			5.0
133027	XYLENES	153.9 ± 40.9, *	(TOTAL)	5.0
95501	1,2-DICHLOROBENZENE			5.0
541731	1,3-DICHLOROBENZENE			5.0