FILE
LANL RD 92

Department of Energy
Field Office, Albuquerque
Los Alamos Area Office
Los Alamos, New Mexico 87544

DEC 28 1992

DEC 1992
RECEIVED
HAZARDOUS WASTE
PROGRAM

TA 35

CERTIFIED MAIL - RETURN RECEIPT REQUESTED

Mr. Benito J. Garcia, Acting Bureau Chief
Hazardous and Radioactive Materials Bureau
New Mexico Environment Department
525 Camino de los Marquez
Santa Fe, NM 87502

Dear Mr. Garcia:

Enclosed for your review and approval is an application for a Research, Development, and Demonstration (RD&D) permit. As stated in NMHWMR6 Part IX and 40 CFR 270.65, RD&D permits are required for any hazardous waste treatment facility which proposes to use an innovative and experimental hazardous waste treatment technology for which permit standards have not been promulgated. Pending approval of the permit application, Los Alamos National Laboratory (LANL) plans to test a packed-bed reactor/silent discharge plasma unit for destruction of several types of hazardous wastes commonly generated by LANL operations.

As previously discussed with Ms. Hoditschek of your staff, LANL is submitting this application in the first quarter of FY 93 so that your staff may begin reviewing and processing the information. If you have any questions or comments concerning this submittal, please contact Jon Mack of my staff at 665-5026.

Sincerely,

Joseph C. Vozella, Acting Chief
Environment, Safety, and Health
Branch

LESH:7JV-022

Enclosure

cc:
See page 2

5089

cc w/o enclosure:
K. Sisneros, New Mexico
Environment Department,
1190 St. Francis Drive,
Santa Fe, NM 87502
A. Tiedman, ADO, LANL,
MS-A120
T. Gunderson, EM-DO,
LANL, MS-K491
K. Hargis, (EM-8:92-3739-1),
EM-8, LANL, MS-K490
T. Grieggs, EM-8, LANL,
MS-K490
D. Hjeresen, EE-AETO, LANL,
MS-F643

Copy 2

RESEARCH, DEVELOPMENT AND DEMONSTRATION (RD&D) PERMIT APPLICATION

PACKED-BED REACTOR/SILENT DISCHARGE PLASMA TREATMENT UNIT

Los Alamos National Laboratory
Los Alamos, New Mexico 87545
EPA I.D. No. NM0890010515

December 1992

Copy α

TA 35

1993 MAR
RECEIVED
HAZARDOUS WASTE
PROGRAM

RESEARCH, DEVELOPMENT AND DEMONSTRATION (RD&D) PERMIT APPLICATION

PACKED-BED REACTOR/SILENT DISCHARGE PLASMA TREATMENT UNIT

Los Alamos National Laboratory
Los Alamos, New Mexico 87545
EPA I.D. No. NM0890010515

December 1992

-2

certifying that the RD&D unit was closed in accordance with the approved closure plan.

11.0 DURATION OF PERMIT

LANL requests that the RD&D permit be issued for a one year period. It is anticipated that a one year time frame will be necessary to collect sufficient data to adequately test the technical feasibility and performance capabilities of the PBR/SDP unit.

Additionally, due to logistics involved in coordinating start-up of the RD&D unit, LANL requests some flexibility in determining when the official start date of the permit will begin. LANL wishes to negotiate with the New Mexico Environmental Department a mechanism to determine a mutually agreeable permit start date.

LANL may request a renewal of the permit at a later time, in accordance with limitations specified in 40 CFR 270.65(d), to test other equipment components or other waste streams.

12.0 CERTIFICATION

I certify under penalty of law that this document and all attachments were prepared under my direction or supervision in accordance with a system designed to assure that qualified personnel properly gather and evaluate the information submitted. Based on my inquiry of the person or persons who manage the system, or those persons directly responsible for gathering the information, the information submitted is, to the best of my knowledge and belief, true, accurate, and complete. I am aware that there are significant penalties for submitting false information, including the possibility of fine and imprisonment for knowing violations.

Name/Title

Signature

12/22/92
Date

Joseph C. Vozella
Chief, Environment Safety & Health Branch, Los Alamos Area Office, DOE
Name/Title

Signature

12/23/92
Date

Jerry Bellows/Area Manager, Los Alamos Area Office
Name/Title

Signature

MAR 30 1993
Date

RESEARCH, DEVELOPMENT AND DEMONSTRATION (RD&D) PERMIT APPLICATION
PACKED-BED REACTOR/SILENT DISCHARGE PLASMA TREATMENT UNIT

TABLE OF CONTENTS

1.0 INTRODUCTION 1

2.0 GENERAL FACILITY INFORMATION 2
- 2.1 RCRA Permit Status 2
- 2.2 Site Location 3
- 2.3 RD&D Unit Location 4
- 2.4 RD&D Project Description 4

3.0 WASTE DESCRIPTION 5
- 3.1 Waste to be Treated in the RD&D Unit 5
- 3.2 Waste Generated by RD&D Treatment 6
- 3.3 Waste Analysis 7

4.0 PROCESS ENGINEERING 8
- 4.1 Description of Treatment Unit 8
  - 4.1.1 Waste Feed System 8
  - 4.1.2 Packed-Bed Reactor Unit Components 8
  - 4.1.3 Silent Discharge Plasma Unit Components . . 9
- 4.3 Pollution Control 10
- 4.4 Ancillary Waste Storage Area 11
- 4.5 Operating Parameters 11

5.0 RESEARCH PLAN 12
- 5.1 Objective 12
- 5.2 Parameters and Monitoring Frequency 13
- 5.3 Monitoring Plan 13
  - 5.3.1 Process Monitors 14
  - 5.3.2 Emissions and Effluent Monitors 14
  - 5.3.3 Equipment Shut Down 15
- 5.4 Inspection Procedures 15

6.0 QUALITY ASSURANCE/QUALITY CONTROL 17
- 6.1 Calibration Procedures 17

7.0 DATA AND RECORDKEEPING 17

8.0 SAFETY PLAN 17

9.0 PERSONNEL QUALIFICATIONS AND TRAINING 22

TABLE OF CONTENTS
(continued)

10.0 CLOSURE PLAN 24
10.1 Closure Performance Standard 24
10.2 Maximum Waste Inventory 24
10.3 Procedures to Close the Unit 24
10.4 Date and Schedule for Closure 26

11.0 DURATION OF PERMIT 27

12.0 CERTIFICATION 27

Figures

Figure 1 Site Map
Figure 2 Location Map
Figure 3 Layout of Building 128
Figure 4 Packed Bed Reactor
Figure 5 Cross-Section of Silent Discharge Plasma Unit
Figure 6 Packed-Bed Reactor/Silent Discharge Plasma RD&D Unit: Open Loop Configuration
Figure 7 Packed-Bed Reactor/Silent Discharge Plasma RD&D Unit: Closed Loop Configuration

Attachments

Attachment 1 Waste Profile Information
Attachment 2 Waste Analysis Plan
Attachment 3 Diagnostic Equipment
Attachment 4 Standard Operating Procedures
Attachment 5 Inspection Record Form (IRF)
Attachment 6 Contingency Plan
Attachment 7 Qualifications of Principal Investigator
Attachment 8 Training Course Summaries

LOS ALAMOS NATIONAL LABORATORY
LOS ALAMOS, NEW MEXICO
EPA I.D. No. NM0890010515

RESEARCH, DEVELOPMENT AND DEMONSTRATION (RD&D) PERMIT APPLICATION

PACKED-BED REACTOR/SILENT DISCHARGE PLASMA TREATMENT

1.0 INTRODUCTION

Environmental goals at Los Alamos National Laboratory (LANL) are to maintain and operate LANL facilities in an environmentally advantageous manner and to develop new technologies that will help the Department of Energy (DOE) in similar efforts at other facilities. New technologies are being developed to better meet the needs of corrective action, waste management, or environmental restoration. The principal mission of LANL is the application of science and technology to solve national problems including weapons development, energy supply, and conservation programs, while basic scientific research complements and strengthens its fundamental technical capabilities. LANL is owned by DOE, and is co-operated by DOE and the University of California.

LANL is requesting issuance of a Research, Development and Demonstration (RD&D) permit from the New Mexico Environment Department for the operation of a Packed-Bed Reactor (PBR) unit combined with a Silent Discharge Plasma (SDP) treatment unit. PBR/SDP technology uses an advanced oxidation technique for the treatment of hazardous wastes as a two stage treatment process. The first stage involves injection of liquid organic hazardous wastes into the externally heated PBR, where many of the hazardous compounds undergo vaporization and thermal decomposition. More complex organic compounds, however, may resist thermal destruction within the PBR and require further treatment. The effluent from the PBR passes into the second stage of the process, the SDP, which is comprised of a non-thermal electrical-discharge plasma. Large quantities of reactive free radicals are generated in the plasma, and the free radicals react with and decompose the remaining hazardous organic constituents in the effluent. The end products of the PBR/SDP waste treatment processes include primarily carbon dioxide, water, carbon monoxide, and acids.

PBR/SDP treatment will involve use of a pilot-scale unit to demonstrate the technical feasibility and performance capability

of an innovative hazardous waste treatment technology. It is anticipated that this system has the potential to destroy hazardous waste organic constituents with a higher efficiency and without the production of typical undesirable high-temperature combustion products of present treatment technologies. The eventual full-scale development of this system would provide distinct improvements over currently available incinerator equipment in terms of both destruction efficiency and effluent gas composition.

The successful completion of this project will be one step in the eventual development of a full-scale treatment system capable of significantly reducing the volume and hazards of several waste streams generated within the DOE production complex. Initially, only RCRA hazardous wastes will be treated in the PBR/SDP unit. If the treatment demonstration is successful, it is anticipated that LANL may request later modification or renewal of the RD&D permit to include treatment of mixed (hazardous and radioactive) wastes.

This RD&D application has been prepared in accordance with the requirements of Section 3005(g) of Resource Conservation and Recovery Act (RCRA), as codified under 40 CFR Section 270.65, and Section 901 of the New Mexico Hazardous Waste Management Regulations. The application also complies with general guidelines published by U.S. Environmental Protection Agency, "Guidance Manual for Research, Development, and Demonstration Permits Under 40 CFR 270.65" (EPA Document No. EPA/530-SW-86-008, July 1986).

2.0 GENERAL FACILITY INFORMATION

2.1 RCRA Permit Status

It is the intent of the Laboratory to perform all activities in compliance with applicable local, state, and federal regulations and orders. Wastes, effluents, and emissions associated with the RD&D project will be handled according to established LANL procedures that are intended to ensure compliance with these regulations.

In November 1989, the New Mexico Health and Environment Department, Environmental Improvement Division, issued a RCRA permit (No. NM 0890010515-1) to LANL. The RCRA permit covers the storage and treatment of a variety of on-site generated hazardous wastes. Regulated unit processes include storage in containers, treatment in tanks, and incineration. In March 1990, EPA issued its portion of LANL's RCRA permit, addressing the RCRA Hazardous

and Solid Waste Amendments (HSWA) requirements. EPA's permit became effective on May 23, 1990.

LANL is also currently regulated under RCRA interim status requirements and is in the process of preparing a permit application covering the facility's mixed waste storage and treatment operations. Mixed waste units at LANL include container storage areas, surface impoundments, storage tanks, a controlled air incinerator, cementation units for process residue, an oxygen sparging unit for pyrophoric mixed waste, and two open burning/open detonation units for treatment of high explosive mixed waste.

As a result of the RCRA permitted and interim status compliance activities, LANL already has in place comprehensive and approved environmental and health management programs meeting RCRA requirements. These programs address overall facility procedures for proper characterization and management of wastes, security, inspection, personnel training, preparedness and prevention, contingency procedures, and facility closure. Operation of the PBR/SDP unit for RD&D purposes will not require development of any additional facility-wide programs or procedures to protect human health and the environment at the LANL facility. Waste analysis, inspection, training, safety, and closure procedures described in this permit application, therefore, are focused on operation of the RD&D unit itself.

LANL is currently in the process of addressing the applicability of National Environmental Protection Act (NEPA) regulations to the operation of the PBR/SDP unit. An initial analysis of potential impacts has been completed and sent to DOE and it has been determined that the unit meets the criteria for a categorical exclusion.

LANL's Environmental Protection Group (EM-8) is responsible for determining the need for air permits at the facility. As part of the NEPA evaluation process, a non-radioactive air emissions review of the PBR/SDP unit has been conducted by EM-8. It was determined that an air quality permit was not required under New Mexico Air Quality Control Regulation (AQCR) 702 Permits. Anticipated emissions of regulated materials were determined to be well below the AQCR 702 Thresholds.

2.2 Site Location

LANL and the residential communities of Los Alamos and White Rock are located in north central New Mexico on the Pajarito Plateau, situated west of the Rio Grande on the eastern slopes of the Jemez Mountains. The LANL facility covers approximately 111 square kilometers (27,500 acres) in and adjacent to Los Alamos

County, and includes 34 active Technical Areas. A site map is provided as Figure 1.

2.3 RD&D Unit Location

The PBR/SDP unit is located at the Alternative Combustion Laboratory (ACL). The ACL is located in Technical Area 35 in a portion of Building 128. Figure 2 shows the location of Building 128. The PBR/SDP unit occupies an area approximately 55 feet by 70 feet in the northeast corner of the building. Figure 3 shows the layout of the unit and the associated RD&D ancillary waste storage area at Building 128

2.4 RD&D Project Description

The purpose of the proposed project is to demonstrate the technical feasibility and performance capability of combined Packed-Bed Reactor (PBR) and Silent Discharge Plasma (SDP) technology for the treatment of hazardous wastes. PBR/SDP treatment will involve use of a pilot-scale unit to demonstrate an innovative hazardous waste treatment technology.

The successful completion of this project will be one step in the eventual development of a full scale treatment system capable of significantly reducing the volume and hazards of several waste streams generated within the DOE production complex. Initially, only RCRA hazardous wastes will be treated in the PBR/SDP unit. If the treatment demonstration is successful, it is anticipated that LANL may later request a modification or renewal of the permit to include treatment of mixed wastes.

The PBR unit involves use of an alumina pellet filled bed that is heated with an external electrical furnace. Liquid organic hazardous wastes are injected along with a carrier gas (air) into the PBR where many of the hazardous compounds undergo vaporization and thermal decomposition. More complex hazardous organic compounds may resist thermal decomposition within the PBR and, therefore, require further treatment. As part of the proposed RD&D activities, this further treatment will be provided by the SDP unit. Figure 4 shows the components of the PBR unit.

SDP treatment is an advanced oxidation technique that will be used for second stage treatment of effluents from the PBR unit. SDP technology involves the use of a non-thermal electrical-discharge plasma. Large quantities of reactive free radicals are generated in the plasma, and the free radicals react with and decompose the remaining hazardous organic constituents in the effluent. In contrast to thermal processes, the SDP operates at near-ambient temperature and pressures, thereby eliminating

complications typical of thermal treatment. Figure 5 shows a cross-section of the SDP unit.

The end products of the PBR/SDP waste treatment process include primarily carbon dioxide, water, carbon monoxide, acids, and trace quantities of unreacted waste and reaction by-products.

Figure 6 illustrates the combined PBR/SDP process for treating organic liquid wastes, where the system will be operated in an open-loop configuration. Figure 7 illustrates the combined PBR/SDP system in a closed-loop configuration. The closed loop system will eliminate the venting of the treated effluent gas to the atmosphere.

A more detailed discussion of the design and operation of the RD&D unit is provided in Section 4 and Section 5 of this application.

3.0 WASTE DESCRIPTION

3.1 Waste to be Treated in the RD&D Unit

The types of wastes that will be tested to determine the effectiveness of the experimental treatment technology are combustible halogenated and non-halogenated organic wastes in liquid or gaseous form. Wastes designated for treatment will originate from operations at the LANL facility. No wastes will be brought from off-site for RD&D treatment in the PBR/SDP unit.

In order to properly manage hazardous wastes at the LANL facility, wastes are chemically and physically characterized in accordance with the approved waste analysis plan contained in LANL's existing RCRA permit. The maximum amount of waste that will be stored at Building 128 awaiting treatment in the PBR/SDP unit will be 55-gallons. Containers of wastes will either be placed in a secondary containment pan or inflatable berm to minimize leakage hazards.

Wastes proposed to be treated in the PBR/SDP unit are summarized below. Copies of the laboratory analyses of the wastes are provided in Attachment 1.

Waste Description	Hazardous Waste Code(s)
Oil with 1,1,1-Trichloroethane from cleaning and repairing of vacuum pumps.	F001

Lacquer thinner from cleaning road painting equipment.	D001
Mixture of acetone/ethanol from degreasing oily parts.	F003

Wastes will be retrieved from permitted LANL storage areas for treatment in PBR/SDP unit. Facility-wide hazardous waste handling operations are coordinated by LANL's Waste Management Group (EM-7). EM-7 responsibilities include: pick-up of hazardous wastes from LANL generators; characterization of wastes to supplement generator-supplied information (as necessary); proper management of wastes in LANL's RCRA permitted units; and coordination of off-site shipment of RCRA wastes to permitted treatment, storage, and disposal facilities.

Procedures for transporting hazardous wastes will conform to conditions specified in the existing RCRA permit issued to the facility. Wastes transferred to the PBR/SDP unit from a permitted storage unit will be accompanied by LANL's Hazardous Material Transfer Form. Copies of this form will be maintained by the RD&D research group, the transport group, and the waste shipper.

3.2 Wastes Generated by RD&D Treatment

Wastes generated on a continuous basis during PBR/SDP treatment are expected to be primarily carbon dioxide, water, carbon monoxide, acids, and trace quantities of unreacted waste and reaction by-products. The effluent line exiting the PBR and the effluent line exiting the SDP unit will be fitted with acid scrubbers. Here water, acids, corrosion products from constituent reaction with PBR equipment, and trace quantities of wastes and decomposition by-products are collected by the scrubber and neutralized. The wastes collected in the acid scrubbers will be emptied by lab personnel into an appropriate container for subsequent storage, treatment, and/or disposal.

Other residues that may be periodically generated during RD&D experiments include piping, spent filters, and spent activated carbon units. These will also be placed into an appropriate container by lab personnel for subsequent storage, treatment, and/or disposal.

All residues generated by PBR/SDP treatment will be containerized and placed into a RD&D ancillary storage area at Building 128 (see Figure 3). This ancillary storage unit is discussed in further detail in Section 4.4. As the waste containers are filled, LANL's Waste Management Group (EM-7) will be contacted to pick up the waste for subsequent storage, treatment, and/or

disposal. Wastes generated during the RD&D experiments will be characterized and managed in accordance with the approved waste analysis plan in LANL's existing RCRA permit. A waste analysis plan describing general LANL waste characterization procedures is provided as Attachment 2.

Emission level evaluations and air permitting for compliance with New Mexico Air Quality Control Regulations are overseen by LANL's Environmental Protection Group (EM-8). Operation of the PBR/SDP unit will comply with New Mexico Air Quality Control Regulations.

3.3 Waste Analysis

It is necessary to have an accurate assessment of the waste stream components, in order to determine the likely decomposition products of the waste undergoing PBR/SDP treatment and to evaluate the effectiveness of the treatment process. Laboratory waste analysis data has been obtained from LANL's Waste Management Group (EM-7), which is responsible for hazardous waste movement, storage, treatment, and disposal at LANL. Copies of the laboratory analytical data for the waste streams are included in Attachment 1.

For each waste type treated in the PBR/SDP unit, LANL personnel will collect a sample of the liquid effluent from the acid scrubber wastewater reservoirs. The liquid will be collected using EPA approved sampling methods (e.g., coliwasa, tubing, or equivalent) and analyzed in accordance with EPA approved sampling methods. Analytical methods may include EPA Method 300, 6010, and/or 7000 series for metals; EPA Method 413.2 for oil and grease; and EPA Method 8240 for volatile organics. Acidic liquid effluent sampling will be performed each time the scrubber waste reservoir is emptied and whenever there is a known change in the relative constituent composition of the treatment system input waste.

The gaseous effluent downstream of the PBR and SDP will be analyzed with several on-line diagnostic instruments including: Teledyne Max5 combustion gas analyser (CGA), Beckman Acculab 2 IR spectrometer, Perkin Elmer Sigma 2000 Gas Chromatograph (GC) with both flame ionization and electron capture detector (which allows ppb-detection and sensitivity), UTI Model 100C 0-300 amu mass spectrometer, BIORAD FTIR spectrometer, and ultraviolet absorption cell (or equivalent instruments). These diagnostic instruments provide a means for accurate assessment of gaseous waste stream composition. Analytical methods will be clearly documented and described in the operating record for the RD&D unit. Only the GC and FTIR spectrometer will be operated continuously during the RD&D experiments. The other diagnostic equipment will operated intermittently to provide supplemental

data. Figure 6 and Figure 7 show the diagnostic equipment monitoring points that may be used during RD&D experiments. Sampling points will be selected based on the data that is to be collected during a particular experiment. Attachment 3 describes the diagnostic equipment performance in further detail.

4.0 PROCESS ENGINEERING

4.1 Description of Treatment Unit

4.1.1 Waste Feed System

An aliquot of liquid waste will be transferred from the waste container and placed into a graduated burette, which will allow a precise determination of the volume of waste to be treated. Waste will be introduced into the PBR/SDP treatment system using either a peristaltic feed pump or a magnetically coupled gear pump. The gear pump will be used for experiments requiring a higher waste flow rate, whereas the peristaltic pump can be used for lower waste flow rates. Carrier gas, which will consist of air, will be introduced into the system along with the waste. An air compressor will be used in conjunction with an atomizer to inject the waste and carrier gas into the PBR furnace unit.

4.1.2 Packed-Bed Reactor Unit Components

Up to three PBR units will be operated for the RD&D experiments. Each PBR furnace unit will consist of a 15-centimeter inner diameter stainless steel pipe with three equally-sized zones that can be independently heated to maintain constant temperature in the PBR. The length of each PBR furnace will be between 1 and 1.5 meters. The PBR pipe will be filled with 1.27-centimeter (0.5-inch) long alumina cylinders and 0.476-centimeter (0.1875-inch) diameter alumina spheres. The heat source surrounding each PBR will be an external electrical tube furnace, with three equally-spaced and independent heating zones. Prior to injection of waste into the unit, the PBR will preheated to a given temperature, depending on the experimental parameters being tested. During actual treatment, the heat generated from waste decomposition may reduce or eliminate the need to continue to operate all three zones of the external furnace.

Downstream of the PBR will be a heat exchanger and acid scrubber. The heat exchanger will be constructed with a simple counter flow design consisting of an inner tube through which the gaseous effluent flows and an outer tube through which non-contact cooling water is circulated. The scrubber will be a portable unit (e.g., Mystaire brand or equivalent) fitted with a reservoir that will recirculate the scrubber water to remove acids from the

effluent gas for the duration of a particular experiment. A second reservoir will contain neutralization solution (potassium hydroxide). Neutralization of the acid gases will produce potassium chloride. The pH of the scrubber water will be monitored using an on-line pH meter to determine when neutralizing solution is spent and, consequently, when the scrubber wastewater reservoir should be emptied. At a minimum, the scrubber wastewater reservoir will be emptied whenever the RD&D waste stream being studied is changed. Waste management is discussed in Section 3.2.

From the acid scrubber, the effluent gas will pass through a polypropylene filter, which will catch any extra liquid or particulates that have made it past the heat exchanger and acid scrubber. The replacement of the filter will depend on the waste treatment flow rate. The estimated filter change interval will be once per week for waste treatment of 36 kilograms/day and twice per week for waste treatment of 108 kilograms. The actual replacement rate will be determined during the course of the experiments. At a minimum, the filter will be changed whenever the waste stream being studied is changed. Waste management is discussed in Section 3.2.

The PBR interior furnace piping, piping to the heat exchanger/scrubber, and interior portions of the heat exchanger will be constructed of a corrosion resistant metal (e.g., Haynes alloy or Hastealloy). Once the corrosivity of the effluent gases has been reduced in the scrubber, less corrosion-resistance material is required. The piping from the heat exchanger/scrubber through the polypropylene filter to the SDP cells will be constructed of stainless steel.

4.1.3 Silent Discharge Plasma Unit Components

Up to three SDP cells will be operated for the RD&D experiments. The cells can be set up to run either in parallel or in series, depending on the treatment needs and flow requirements of a particular experiment. Each SDP unit will consist of two electrodes, both of which are covered with a dielectric layer (e.g., glass) to separate the electrodes from the gas effluent to be treated. The gap between the dielectric layers will have an approximate effluent processing volume of 0.5 liters in each cell. Silent discharge plasmas are usually produced with near ambient pressure (1 to 3 atmospheres) electrical discharges. With the use of a dielectric barrier and application of alternating high voltages, large quantities of plasma are generated by microdischarges in the gas between the electrodes. These discharges, which are transient, typically develop in only a few nanoseconds. Due to the short duration of the microdischarges the electrical energy is mainly coupled into

electron channels. The energetic electrons effectively create free radicals in the effluent gas. The free radicals generated by the plasma react with organic compounds in the effluent gas stream, primarily producing carbon dioxide, water, acids, and trace levels of unreacted wastes and waste decomposition by-products.

The principal electrical power supply is a series invertor that switches charged capacitors through a high-quality pulse transformer by means of a high-power thyristors. The unit can supply nearly 4 kilowatts of power at voltage pulse repetition frequencies of up to 4.5 kilohertz. The electrical power deposited into the discharge plasma is measured using a high-voltage probe combined with a charge-transfer bridge. Integration of a voltage-charge plot obtained from these two instruments gives the measured power.

Downstream of the SDP unit, the effluent gas will pass through an acid and carbon dioxide scrubber (e.g., Mystaire brand or equivalent). The scrubber will be a portable unit fitted with a reservoir that will recirculate the scrubber water to remove acid and carbon dioxide from the effluent gas for the duration of a particular experiment. A second reservoir will contain neutralization solution (potassium hydroxide, KOH). Neutralization of the acids will produce potassium chloride. The pH of the scrubber water will be monitored using an on-line pH meter to determine when the neutralization solution is spent and, consequently, when the scrubber wastewater reservoir should be emptied. At a minimum, the scrubber wastewater reservoir will be emptied whenever the RD&D waste stream being studied is changed. Waste management is discussed in Section 3.2.

The piping from the SDP cells to the second treatment system scrubber will be constructed of stainless steel material. Since the acid scrubber will reduce the corrosivity of the effluent gases, less corrosion-resistant material is required for those portions of the system downstream of the scrubber. The piping leading from the scrubber to the Building 128 vent (for open loop) or back to the waste feed portion of the system (for closed loop) will be constructed of either PVC or copper material.

4.3 Pollution Control

A pollution control device is necessary only when the system is operated in an open loop configuration, with effluent gases vented to the atmosphere. Figure 6 shows the treatment system components in an open loop configuration. Prior to being exhausted through the Building 128 vent, the effluent gas stream will pass through a granular activated carbon unit. The carbon unit is in place to prevent the accidental release of hazardous

substances to the atmosphere, in case of PBR/SDP unit malfunction. The carbon unit will also serve to absorb unreacted wastes or organic waste decomposition by-products. A pressure monitoring gauge will be installed either side of the carbon unit and a pressure drop across the unit will be used to signal that the carbon is spent and requires replacement. Waste management is discussed in Section 3.2.

The granular activated carbon unit will not be used when the PBR/SDP is operated in a closed-loop mode. Figure 7 shows the treatment system components in a closed loop configuration. In the closed loop setup, the effluent gas will be recirculated into the system to serve as a carrier gas for continued waste treatment. No effluent will be vented to the atmosphere.

4.4 Ancillary Waste Storage Area

The ancillary RD&D hazardous waste storage area will only be operated for the duration of the RD&D permit, and will not be used to manage wastes other than those specifically associated with PBR/SDP treatment. The EPA RD&D Guidance Manual specifically allows for the storage of hazardous wastes associated with RD&D activities, without the need to permit the storage area. RD&D guidance allows for storage of up to 15,000 kilograms of hazardous waste intended for experimental purposes.

The ancillary hazardous waste storage area associated with the PBR/SDP unit will include up to 55-gallons of waste awaiting treatment, up to 55-gallons of waste from the acid scrubbers, and up to 55-gallons of other solid wastes (e.g., spent filters, replaced piping).

The waste containers will be placed in secondary containment (e.g., pan or inflatable berm) on the concrete pavement outside and adjacent to Building 128. The secondary containment will be sized to accommodate both ten percent of the total waste volume stored in the ancillary unit and the entire contents of the largest container that may be managed in the unit (in this case, 55 gallons). The storage unit will also be covered to prevent precipitation run-on and run-off. Figure 3 shows the location of the RD&D hazardous waste storage unit.

4.5 Operating Parameters

The effectiveness of PBR/SDP technology can be determined through a variety of combinations of operating parameters and controls. The major operating parameters that can be controlled and varied during the operation of the unit are:

- Open loop versus closed loop system configuration;
- Number of packed-bed reactors;
- Number of silent discharge plasma cells;
- Temperature of packed-bed reactor;
- Input waste flow rate;
- Oxidizing gas flow rate;
- SDP cell voltage;
- SDP cell voltage pulse repetition.

The application of these control parameters is further explained in the following Section 5.2.

5.0 RESEARCH PLAN

PBR/SDP treatment will involve use of a pilot-scale unit to demonstrate the technical feasibility and performance capability of an innovative hazardous waste treatment technology. It is anticipated that this system has the potential to destroy hazardous waste organic constituents with a higher efficiency and without the production of typical undesirable high-temperature combustion products of present treatment technologies. It is believed that full-scale development of this system would provide distinct improvements over currently available treatment technologies, such as incineration, in terms of both destruction efficiency and effluent gas composition.

LANL has identified a need to explore alternative technologies for the treatment of hazardous organic wastes. LANL has already evaluated the SDP process as a post-incinerator treatment process for oils and solvents using surrogate products. Encouraging results from that evaluation has led to the construction and testing of a combined, two-stage packed bed reactor (PBR/SDP) unit.

This section describes the parameters to be varied and monitored, general methods of sampling and analysis, and inspection procedures to be conducted under the RD&D permit.

5.1 Objective

The objective of the RD&D permit will be to obtain data from the use of the PBR/SDP unit by treating hazardous wastes under several different operating conditions. Liquid hazardous wastes will be chosen from those wastes in storage at LANL and are described in Section 3.1. The results of the work under this permit is anticipated to demonstrate the complete (greater than 99.99%) destruction of the hazardous constituents of the waste samples.

5.2 Operating Parameters and Monitoring Frequency

The hazardous waste streams to be tested under the RD&D permit are identified in Section 3.1. Under the RD&D permit, optimization of the PBR/SDP operating parameters will be refined and possible PBR/SDP limitations for treating the selected wastes will be determined. Furthermore, the specific system configuration and need for additional components will be reviewed for possible enhancement of the PBR/SDP system. Specific components included in this review may include atomizers, bed materials, pumps and compressors for injection, component construction materials, heat exchanger design, and external furnace configuration.

Bench-scale studies for several operating parameters have already been conducted using surrogate materials. PBR/SDP work with surrogate materials, similar to those proposed under this permit, has not exceeded any LANL safety or environmental criteria. Using this previously gathered information, the research planned under the RD&D permit would be conducted using the following operating parameters.

Operating Parameter	Experimental Range
System configuration	open or closed loop
Number of PBR units	1 to 3 units
Number of SDP cells	1 to 3 cells
Packed-bed temperature	250 to 1300 °C
Input waste flow rate	36 to 108 kg/day
Oxidizing gas flow rate	Up to 1460 l/min
SDP cell voltage	Up to 4 kilowatts
SDP cell voltage pulse repetition	Up to 4.5 kilohertz

Mass balance calculations will be performed for each experiment to determine the final outcome of the hazardous waste constituents.

5.3 Monitoring Plan

Monitoring equipment includes systems for process control and effluent and emission analysis that enable the operator of the PBR/SDP unit to take those measurements necessary to demonstrate that the unit is operating in a controlled and safe manner, is

not presenting a hazard to human health and the environment, and is in compliance with permit conditions.

The PBR/SDP unit is described in Section 4 and shown in Figure 6. The monitoring system involves process monitoring and effluent and emissions monitoring.

5.3.1. Process Monitors

The PBR/SDP treatment units are operated as a computer controlled system. Process monitoring includes the metering of gas flow rate, temperature, pressures, SDP cell voltage and current, and consumed electrical power, to provide for stable and safe operation of the PBR/SDP unit. Temperature sensors from the PBR unit(s), electrical power at the SDP cells, gas pressure and data from the on-line diagnostic equipment are all computer monitored. The system is designed to optimize hazardous waste destruction so that no more than one part per million of total hydrocarbons is detected in the effluent, as measured by the on-line diagnostic equipment. If the treatment system is not performing to the required minimum destruction level, the computer will shut off the waste feed rate and adjust the PBR temperature and SDP energy supply to increase the destruction efficiency of the system.

If the computer-monitored temperature in the PBR or the gas pressure in the SDP becomes too high, the system is designed to automatically shut off. Equipment shut down is discussed in detail in Section 5.3.3.

5.3.2. Emissions and Effluent Monitors

As stated in Section 3, wastes generated during PBR/SDP treatment are expected to be primarily carbon dioxide, water, carbon monoxide, and acids, with traces of corrosion products from reaction of acidic effluent gases with process equipment, and traces of unreacted wastes and other combustion by-product gases. Monitoring of PBR/SDP effluents will parallel the accumulation of operating parameter and process data in order to analytically confirm these data, in addition to evaluating the effectiveness of the PBR/SDP technology.

The composition of the gaseous effluent stream will be analyzed with several on-line diagnostic instruments including: Teledyne Max5 combustion gas analyser (CGA), Beckman Acculab 2 infrared (IR) spectrometer, Perkin Elmer Sigma 2000 Gas Chromatograph (GC) with both flame ionization and electron capture detector (which allows ppb-detection and sensitivity), UTI Model 100C 0-300 amu mass spectrometer, a BIORAD FTIR spectrometer, and an ultraviolet absorption cell (or equivalent instruments. Figure 6 and Figure 7 shows the available sampling locations in the PBR/SDP system.

The diagnostic equipment will analyze the effluent from one or more sampling ports, depending on the data to be collected during a particular experiment. The diagnostic and monitoring equipment will provide a real-time indication of treatment performance. Although not all diagnostic equipment may be operated simultaneously, at a minimum, the gas chromatographic and FTIR spectrometer will be operated continuously. Other diagnostic equipment will operated intermittently to provide supplemental data. Attachment 3 describes the diagnostic equipment performance in further detail.

The pH of the scrubber water will be monitored using an on-line pH meter to determine when neutralizing solution in each acid scrubber is spent and, consequently, when the scrubber wastewater reservoir should be emptied. samples will be collected of the acid scrubber wastewater as described in Section 3.3.

5.3.3 Equipment Shut Down

Any upset condition that affects the unit's ability to perform within permit requirements or that poses a threat to human health or the environment will be cause for shut down of the unit. Malfunction of either the PBR or the SDP will also be cause to terminate an experiment. Equipment shut down will include immediate shut down of the waste feed system, continued input of the carrier gas to purge the system, and safe shut down of the remaining electrical, mechanical, and diagnostic equipment components. Shut down procedures to be followed in the event of an emergency are described in the Standard Operating Procedures (SOP) in Attachment 4.

Additionally, the PBR/SDP system is computer controlled. When unsafe temperatures in the PBR or high pressures in the SDP cells are detected, the computer is programmed to automatically shut off the waste feed system first, and then to shut off the PBR and SDP units.

5.4 Inspection Procedures

Routine inspections of the PBR/SDP treatment unit equipment components are conducted to identify equipment malfunction, deterioration, and operator errors that might lead to a release of hazardous waste to the environment and pose a threat to human health and the environment. Additionally, the ancillary hazardous waste storage area will be inspected to ensure that no releases to the environment have occurred or may potentially occur. Inspections will be conducted every day that the PBR/SDP system is operated, to identify problems promptly and allow for timely repair and cleanup. Research operators of the PBR/SDP unit will be responsible for conducting inspections, and

originals of the inspection records will be kept in an inspection logbook by the RD&D research group. Inspection records will be retained for a minimum of three years from the date of inspection. Copies of the inspection records will be submitted to the Environmental Protection (EM-8) group, Hazardous and Solid Waste Section, at the end of each work week.

An example of the Inspection Record Form (IRF) used at LANL and instructions for its use are provided as Attachment 5. The IRF is a comprehensive form that applies to all categories of both hazardous and mixed waste units; thus, not all sections of the IRF apply to all units. Items that do not apply at the RD&D unit will be marked as not applicable.

If an inspection indicates that corrective action measures are warranted, any and all actions taken, along with time, date, and other pertinent information, will be recorded on the inspection form and all subsequent inspection forms until corrective measures are completed. If a condition is found in which a release to the environment is imminent or has already occurred, the condition will be assessed by the RD&D supervisor or a designated representative. If this assessment indicates that human health or the environment may be adversely affected, the Contingency Plan, provided as Attachment 6, will be implemented.

Quarterly Environmental Safety & Health (ES&H) inspections of Building 128 are also conducted by the group ES&H officer in conjunction with one or more of the following personnel: group leader (or delegate), division EH&S committee member, division office representative, and a Health and Safety (HS) division representative. Both Occupational Safety Health Administration (OSHA) and RCRA deficiencies are noted during the quarterly inspection. Items covered include: Signs and other postings, SOP availability, Material Safety Data Sheet (MSDS) availability, waste handling procedures, provisions for spills of hazardous materials, fire extinguishers, personal protective equipment availability, housekeeping, chemical storage, compressed gas cylinder storage, ventilation, and building perimeter. Deficiencies noted during the inspection are recorded in a memo, which prioritizes the deficiency (i.e., imminent danger, serious risk, low risk, minor condition) for attention and corrective action. Records of the inspections are maintained by the group leader and group ES&H officer.

Additionally, equipment and operation procedures are described in the current SOP developed for the unit. A copy of the SOP is provided as Attachment 4. Problems related to equipment or operational malfunction, deterioration, or operator error will be recorded in the logbook that will be maintained throughout the RD&D project. Details of the corrective action measures taken in

response to these errors will also be recorded in the project logbook.

6.0 QUALITY ASSURANCE/QUALITY CONTROL

6.1 Calibration Procedures

It is essential that equipment used during PBR/SDP treatment be periodically calibrated to ensure proper operation of the unit and to ensure protection of human health and the environment.

Flow meters and temperature gauges will be factory calibrated and will not be adjusted for the duration of the RD&D experiments.

Effluent pH monitors and diagnostic equipment including the Teledyne Max5 combustion gas analyser, Beckman Acculab 2 IR spectrophotometer, Perkin Elmer Sigma 2000 Gas Chromatograph, a UTI Model 100C 0-300 amu mass spectrometer, and BIORAD FTIR spectrometer will be calibrated by LANL researchers using gas samples of known concentrations. Additionally, the FTIR contains a built in calibration library.

The high voltage electrical equipment is calibrated on a routine basis by the ENG-9 calibration lab.

7.0 DATA AND RECORDKEEPING

Data on PBR/SDP operating parameters (feed rate, temperature, air flow), treated waste volume, and effluent composition as analyzed by on-line diagnostics equipment will be collected on a continuous basis. Data will be recorded in facility logbooks, and in the diagnostic instrument computer databases. At a minimum, all process monitoring (flow, temperature, pressure) will be conducted at hourly intervals during operation of the PBR/SDP unit, or whenever operating parameters are changed. Mass balance calculations will also be performed to determine the final outcome of the hazardous waste constituents.

Reports summarizing the findings of the RD&D project will be prepared on a monthly basis. Copies of the monthly reports will be submitted to the New Mexico Environment Department.

8.0 SAFETY PLAN

The Safety Plan implemented for the RD&D unit will complement those procedures approved in LANL's current RCRA Contingency Plan contained in the facility's RCRA permit authorized November 1989

and those procedures specified in the "RCRA Interim Status Contingency Plan for Mixed Waste Units" prepared May 1992.

A modified Contingency Plan, which addresses general emergency procedures applicable to the RD&D unit, has been included with this application as Attachment 6.

An analysis of hazards related to the PBR/SDP unit has been performed by project personnel, group safety personnel, the building manager, and interactions with Health Safety and Environmental Management personnel. Administrative control measures include personnel training and development of Standard Operating Procedures (SOP). Engineering control measures include warning lights and alarm systems, electrical current breakers, protective shielding panels, electrical circuit designs, and pollution control equipment.

The PBR/SDP unit was configured to minimize hazards and appropriate measures were taken to conduct safe operations and to minimize potential emissions. Building 128, where the RD&D unit is located, is equipped with the following safety systems:

- Fire detection/alarm/annunciator system;
- Fire suppression (sprinkler) system;
- Ventilation system

The PBR/SDP unit operates with the following safety features:

- Containers of hazardous wastes will be covered and stored in a secondary containment to minimize leakage hazards and precipitation run-on/run-off problems.
- Waste injection line is equipped with a solenoid valve that will automatically shut off waste flow into the PBR, in the event that there is a cessation of oxidizing gas (oxygen and argon, or air) into the unit.
- External shielding around the PBR unit prevents contact with the heating elements.
- The PBR/SDP system is computer controlled and designed to automatically shut down when unsafe PBR temperature and SDP cell gas pressure are detected.
- The computer controlled system is designed to monitor destruction efficiency. When minimum destruction requirements (i.e., no more than 1 part per million

total hydrocarbons) is not being achieved by the system, the computer will shut off the waste feed, but continue to operate the PBR/SDP components to treat the remaining waste already present in the system.

- The SDP cell is enclosed in a box constructed of polycarbonate panels. This box is interlocked with the high voltage power supply system. Any attempt to access the SDP cell during operation shuts off the power supply.

- Red flashing high voltage warning light on main high voltage power supply equipment is activated when power supply in on.

- Power supply is equipped with an emergency high-voltage shut-off button.

- Final effluent gas stack is equipped with a back-up granular activated carbon absorber to prevent the accidental release of hazardous substances in case of PBR/SDP unit malfunction during open loop system operation.

A summary of potential hazards and mitigating measures is provided below.

- **FIRE HAZARDS**

  Hazard Description: Packed-bed reactor is heated by furnace and oxidizes organic liquids at high temperatures. Electric equipment can be a fire hazard. Flammable materials and wastes also pose a potential fire hazard.

  Potential Effects: Personnel injury; equipment damage.

  Safety Measures: Packed-bed reactor is not pressurized and is operated with very lean fuel mixture to prevent ignition, deflagration, and explosion. Furnace heating elements are in vendor-supplied enclosures. Additional heat shields are provided for exposed hot plumbing. Computer controlled system will shut down PBR/SDP when excessive temperatures are detected. Building is equipped with electronic heat/smoke detectors, building-wide alarm system, sprinkler system and fire extinguishers. All operating personnel will be properly trained to recognize hazards and respond to emergencies.

- **ELECTRICAL HAZARDS**

  Hazard Description: Power supplies, furnaces, computer equipment, diagnostics equipment, and tools use 115/208 volt service. SDP unit uses high-voltage (5 to 30 kV) equipment.

  Potential Effects: Personnel injury from electrical shock; equipment damage.

  Safety Measures: Electrical safety system contains high voltage warning lights, emergency shut-off switch, and enclosure/cabinet interlocks. Red flashing high voltage warning light is mounted to main high voltage power supply cabinet and is activated when high voltage supply is on. Emergency high voltage shut-off button is a prominent red button that interrupts high voltage supply under emergency conditions. Electrical interlocks prevent operation of high-voltage power supply if plasma cell enclosure or power supply cabinet door is not in place or properly closed. Electrical equipment will be properly grounded. All operating personnel will be properly trained to recognize hazards and respond to emergencies. All personnel involved in potentially hazardous high voltage operations must work in pairs.

- **CHEMICAL HAZARDS**

  Hazard Description: Hazardous liquid organic wastes are treated in unit. Cleaning agents and solvents, such as acetone and alcohol, are used during equipment assembly and maintenance.

  Potential Effects: Personnel injury; equipment damage; fire.

  Safety Measures: Hazardous wastes containers in the RD&D ancillary storage area will be placed in a secondary containment and covered to minimize leakage hazards and prevent precipitation run-on/run-off. Cleaning agents and solvents will be stored in chemical cabinet. MSDSs are kept in notebook file at RD&D unit. Rags containing cleaning solvents will be disposed of in approved containers. Containers are emptied by personnel with waste generator training at the Building 128 satellite storage area. Ventilation system consists of through-the-wall fan with capacity of 100

cubic feet per minute. PBR/SDP exhaust stack will be equipped with back-up activated carbon canister to prevent accidental release of hazardous constituents in case of equipment malfunction during open loop system operation. Concentrations of hazardous gaseous effluents is monitored by associated diagnostic instruments. Building 128 is equipped with emergency eye wash station. Chemical residues generated during RD&D treatment will be managed in approved containers and temporarily in Building 128 satellite storage area. Wastes will be removed from satellite storage area by LANL's Waste Management Group (EM-7) in accordance with procedures outlined in the existing RCRA permit for the facility.

- **MECHANICAL HAZARDS**

  Hazard Description: Routine mechanical assembly and lifting operations are carried out at the RD&D unit. Accidents involving tools, fixtures, and lifting devices have the potential to cause personnel injury or equipment damage.

  Potential Effects: Personnel injury; equipment damage.

  Safety Measures: Only approved lifts and hoists will be used. Personnel will exercise caution in the use of hand and power tools, wearing protective equipment such as safety glasses. Tripping and slipping hazards will be mitigated by proper storage of equipment and housekeeping.

- **COMPRESSED GAS HAZARDS**

  Hazard Description: Compressed gases in bottles through K-size and pressures up to 3000 psi are normally used at the unit. There are no pressure vessels in the facility, both packed-bed and plasma cells operation at only 1 to 3 psi pressure differentials.

  Potential Effects: Personnel injury; equipment damage; chemical release.

  Safety Measures: Personnel will receive training in the use of compressed gases and associated regulators, valves, gauges, and plumbing. Proper regulators will

be used for various gases and gas cylinders. Check valves are installed on equipment to prevent build-up of hazardous stored compressive energy and consequent mechanical failure. PBR unit is equipped with thermocouples and mechanical gauges that measure the temperature and pressures generated in the packed-bed. Unit operators monitor temperature and pressure in order to prevent explosions from occurring.

9.0 PERSONNEL QUALIFICATIONS AND TRAINING

Dr. Louis A. Rosocha will lead the RD&D program for the PBR/SDP unit. He is principal investigator for this project and has overall responsibility for technical and program leadership, guidance, and interfacing. A copy of Dr. Rosocha's resume is provided in Attachment 7. Personnel authorized to operate the PBR/SDP system and their duties are described below. Other qualified and suitably trained personnel may also be authorized to perform the RD&D experiments.

Name	Responsibility
John Coogan	Scientific and Technical Oversight, Daily Operations, Analytical Diagnostics, Process Modelling
Roger Tenant	Mechanical Engineering Support
Mike Kang	Electrical Engineering Support
Graydon Anderson	Analytical Diagnostics and Instrumentation
Rudy Vargas	Overall Technician Support
Heidi Heck	Analytical Diagnostics and Instrumentation
Laurie Bechtold	Process Modelling

LANL's personnel training program conforming to RCRA requirements is managed by the Risk Management Support Group (HS-3) of the Health and Safety (HS) Division. Records of formal training for each person who manages hazardous waste is maintained in the HS-3 training office. At a minimum, all PBR/SDP operations personnel

will receive the following training. Summaries of the training courses are provided in Attachment 8.

- General Employee Training (GET)
- Introduction to Hazard Communication
- OSHA Hazardous Waste Operations (29 CFR 1910.120) and Refresher Course (as necessary)
- Waste Generator Training
- CPR - Adult
- First Aid - Standard
- Electrical Safety Awareness Training
- Pressure Safety: Compressed Gas Systems
- Contingency Plan/Spill Prevention, Control and Countermeasure (SPCC) Plan

Division and group leaders and immediate supervisors are responsible for ensuring that education and training in site-specific emergency response procedures and in LANL's emergency response program are also provided. Periodic unannounced emergency drills and exercises are used to familiarize employees with emergency procedures.

Additionally, authorized personnel will receive unit-specific training in Standard Operating Procedures (SOP). A copy of the current SOP is provided as Attachment 4. The SOP is reviewed at least annually and updated when necessary. Review and revision of SOPs is directed by LANL's Environmental Protection Group (EM-8).

The safety training records of new staff are reviewed upon assignment to the research unit. Additional training will be designated as necessary. Individual training records of operations personnel will be reviewed annually by the team leader. All new LANL employees will receive appropriate training within six months of their date of hire or transfer. Personnel will not work in unsupervised positions until they successfully complete the appropriate levels of training for their position and responsibilities.

10.0 CLOSURE PLAN

10.1 Closure Performance Standard

This closure plan is designed to ensure that the RD&D unit will be closed in a manner that will not require further maintenance and that controls, minimizes, or eliminates, the post-closure escape of hazardous waste and hazardous constituents to the environment. At the time of closure, all waste and decontamination residues will be removed and disposed at an appropriate storage, treatment, or disposal facility. Decontaminated equipment may be salvaged for other uses at the LANL facility. No post-closure care will be required, as no disposal of hazardous wastes or hazardous constituents will occur.

At closure all hazardous wastes and hazardous constituents of wastes managed in the PBR/SDP unit will be removed. Verification sampling will be performed to demonstrate that decontamination has been effective.

10.2 Maximum Waste Inventory

The maximum inventory of hazardous wastes that may be stored at in the RD&D ancillary storage area at any one time will be 165 gallons (three 55-gallon containers or equivalent). At closure, the entire inventory of hazardous waste associated with the PBR/SDP unit will be removed. LANL's Waste Management Group (EM-7) will coordinate the pick-up of hazardous wastes from Building 128; characterize the wastes (as necessary); ensure proper management of wastes in LANL's RCRA permitted units; and coordinate off-site shipment of RCRA wastes to appropriate permitted treatment, storage, and disposal facilities.

10.3 Procedures to Close the Unit

All waste inventory present at the unit at the time of closure will be transported by qualified LANL personnel to one of LANL's RCRA permitted storage units for subsequent storage, treatment, and/or disposal as described in Section 10.2.

Dismantling and decontamination of the experimental unit and waste storage area will be accomplished by either trained Waste Management Group (EM-7) decontamination personnel or qualified subcontractors. All equipment associated with the PBR/SDP unit that has come in direct contact with hazardous waste will be disposed as hazardous waste, decontaminated and reused, or decontaminated and disposed as solid waste. The PBR/SDP equipment components and plumbing will be dismantled and placed in appropriate containers. Oversize pieces of equipment will be

wrapped in plastic sheeting. All other wastes including treatment effluents and filter units will be suitably containerized. The wastes will be characterized in accordance with the Waste Analysis Plan, provided as Attachment 2. All wastes will be transported from Building 128 by the Waste Management Group (EM-7) or qualified subcontractors. Wastes determined to be hazardous will be transported to one of LANL's RCRA permitted storage units in Technical Area 50 or Technical Area 54 for subsequent storage, treatment, and/or disposal. Wastes determined to be non-hazardous solid wastes will be transported to Technical Area 51 for subsequent storage and disposal.

If feasible and practical, decontamination of equipment and parts may be performed. LANL maintains a decontamination facility located in Building 1 of Technical Area 50. This facility is outfitted with proper decontamination equipment and run-off controls. Equipment components and plumbing may be decontaminated using methods such as steam-cleaning, detergent washing, or equivalent methods. Decontamination will be performed by the Waste Management Group (EM-7) personnel or qualified subcontractors wearing appropriate personal protective equipment. Sampling and regulatory support for decontamination activities will also be provided by the Environmental Protection Group (EM-8). Decontaminated equipment may be disposed as non-hazardous scrap in Technical Area 51 or may be returned for reuse at the facility. All solutions produced during decontamination will be containerized, characterized in accordance with the Waste Analysis Plan in Attachment 2, and sent to an appropriate storage, treatment, or disposal facility.

The PBR/SDP operating records will be reviewed to determine if spills or leaks of hazardous wastes occurred during operation of the unit. If spills or leaks occurred, swipe sample(s) will be collected in those areas. The swipe sample(s) will be analyzed for hazardous constituents of the wastes spilled using approved EPA methods. If hazardous constituents are detected in a swipe sample, then the floor in and around the PBR/SDP unit (located in a 55-foot by 70-foot area of Building 128) or the concrete pad under the ancillary hazardous waste storage area will be decontaminated using steam-cleaning, detergent washing, or other equivalent methods.

Decontamination of equipment components and floors (if necessary) will be demonstrated using either swipe samples or samples of rinsate water. Samples will be analyzed for organic constituents of the waste using EPA Method 8240. Successful decontamination will be defined as:

- No detectable hazardous constituents of wastes treated in the PBR/SDP unit in the final rinsate or swipe sample.

If sampling indicates that decontamination has not been successful, then steam-cleaning, detergent washing, or other equivalent methods will be repeated until sampling indicates that decontamination is complete.

An alternative demonstration of decontamination may be proposed and justified at the time of closure as circumstances indicate. If the proposed alternative is judged to be acceptable under standards and guidance in effect, then the alternative will be incorporated into the closure plan by permit modification.

10.4 Date and Schedule for Closure

LANL will notify the New Mexico Health and Environment Department in writing 45 days prior to the date of anticipated closure. Within 90 days of accepting the final volume of hazardous wastes for treatment in the RD&D unit, the entire inventory of hazardous waste will be removed from the unit for proper storage and subsequent treatment/disposal at one of LANL's RCRA permitted hazardous waste management units. Within 180 days of accepting the final volume of hazardous wastes, all closure activities will be completed. The proposed schedule for the unit is as follows:

Activity	Days
Final receipt of waste	0
Removal of waste inventory to RCRA permitted storage unit	0-90
Equipment demolition and removal	30-90
Equipment decontamination	60-90
Floor decontamination (if necessary)	60-90
Appropriate storage, treatment, and/or disposal of decontamination residues	60-120
Sampling and analysis to verify decontamination	60-120
Closure Certification	180

Upon completion of closure, an independent registered professional engineer and the DOE shall prepare a letter

FIGURE 1

Site Map

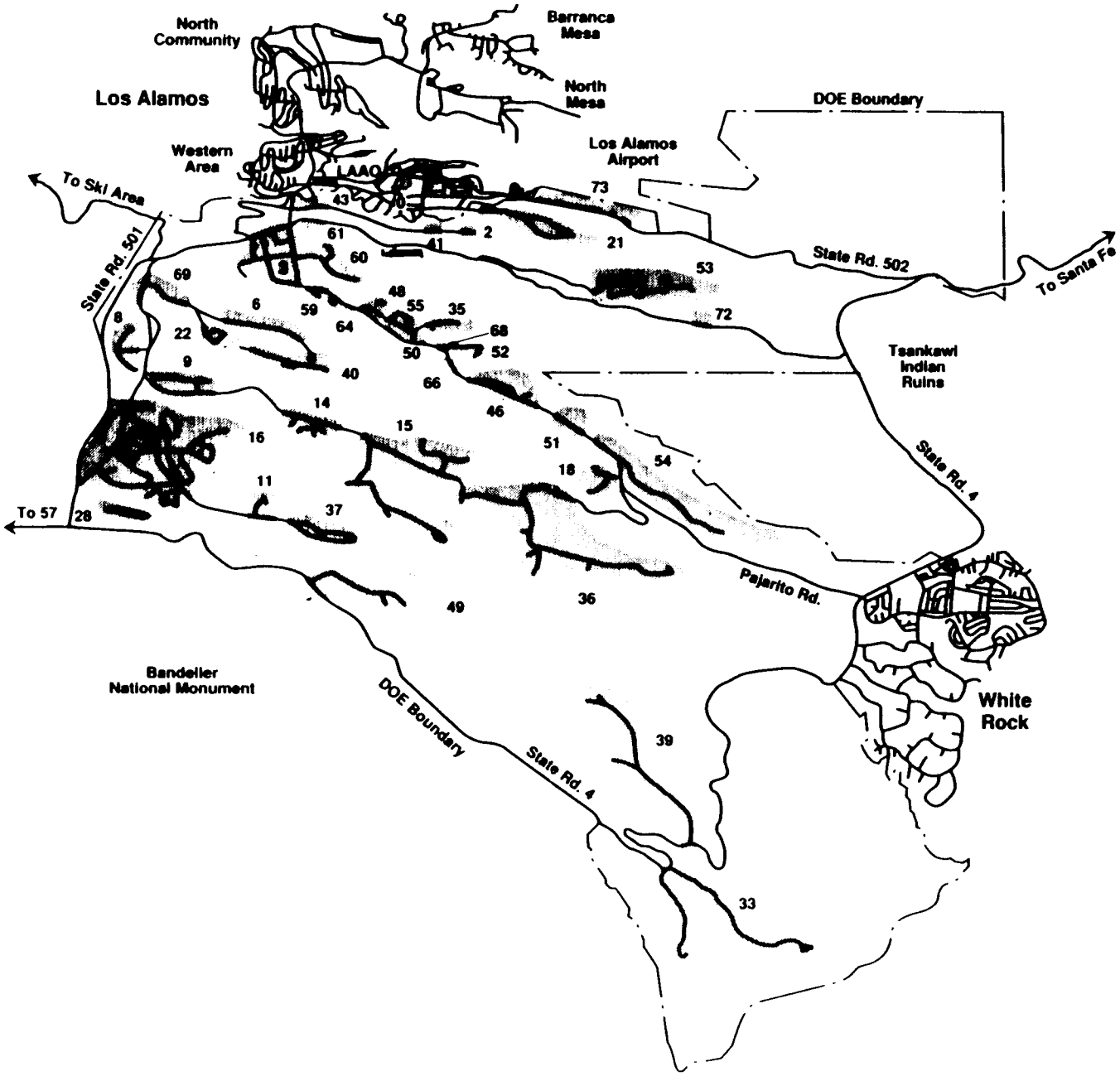

Los Alamos
NATIONAL LABORATORY

Technical Area Locations

TA-0	Unassigned Land Reserve
TA-2	Omega Site
TA-3	South Mesa Site
TA-6	Two Mile Mesa Site
TA-8	Anchor Site West
TA-9	Anchor Site East
TA-11	K-Site
TA-14	Q-Site
TA-15	R-Site
TA-16	S-Site
TA-18	Pajarito Laboratory
TA-21	DP-Site
TA-22	TD-Site
TA-28	Magazine Area A
TA-33	HP-Site
TA-35	Ten Site
TA-36	Kappa Site
TA-37	Magazine Area C
TA-39	Ancho Canyon Site
TA-40	DF-Site
TA-41	W-Site
TA-43	Health Research Lab & DOE Headquarters
TA-46	WA-Site
TA-48	Radiochemistry Site
TA-49	Frijoles Mesa Site
TA-50	Waste Management Site
TA-51	Radiation Exposure Facility
TA-52	Reactor Development Site
TA-53	Meson Physics Facility
TA-54	Waste Disposal Site
TA-55	Plutonium Facility Site
TA-57	Fenton Hill Site
TA-59	OH-Site
TA-73	Airport

TA-60,61,64,66,68,72
(unnamed TAs)

FIGURE 2

Location Map

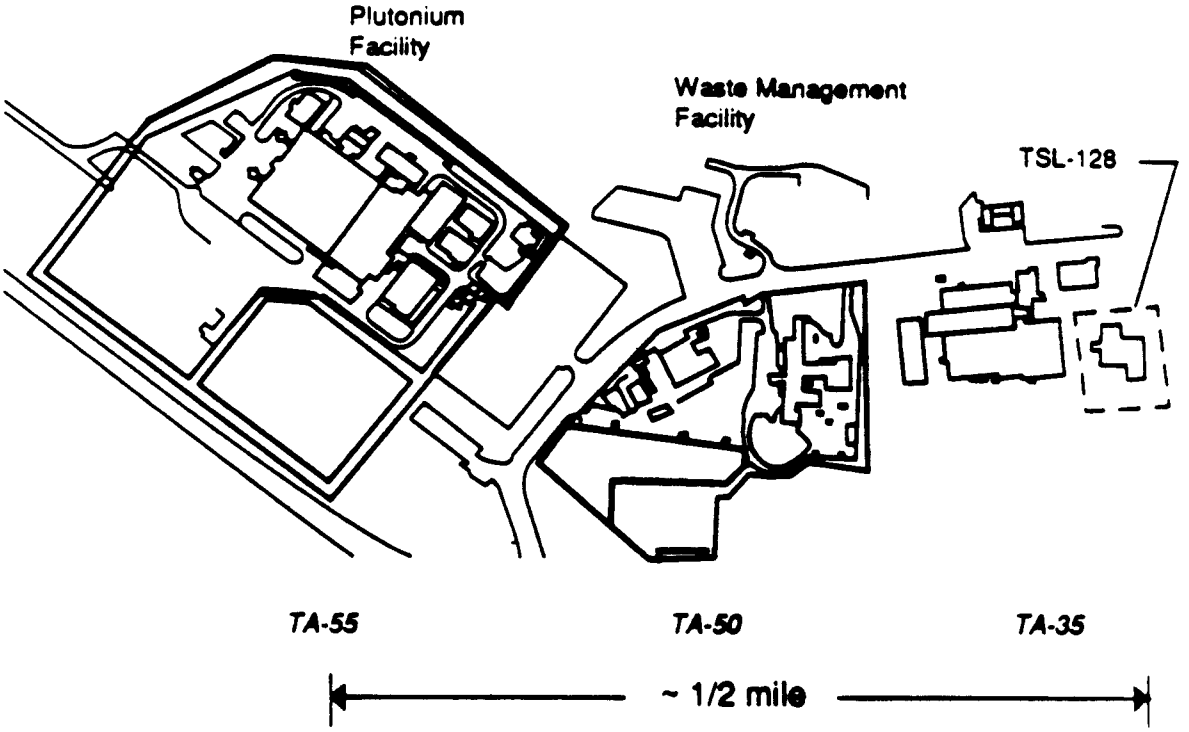

FIGURE 3

Layout of Building 128

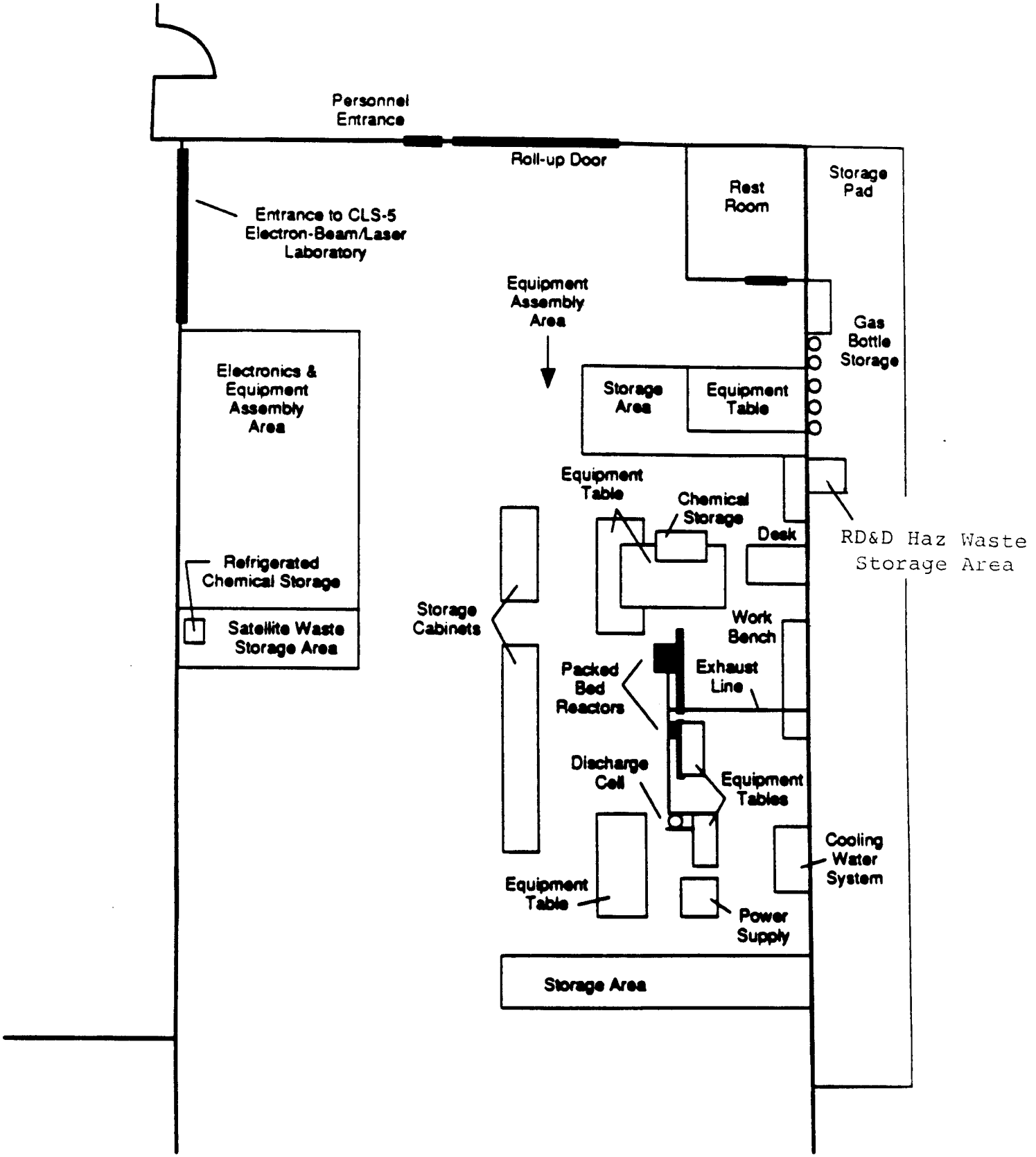

FIGURE 4

Packed-Bed Reactor

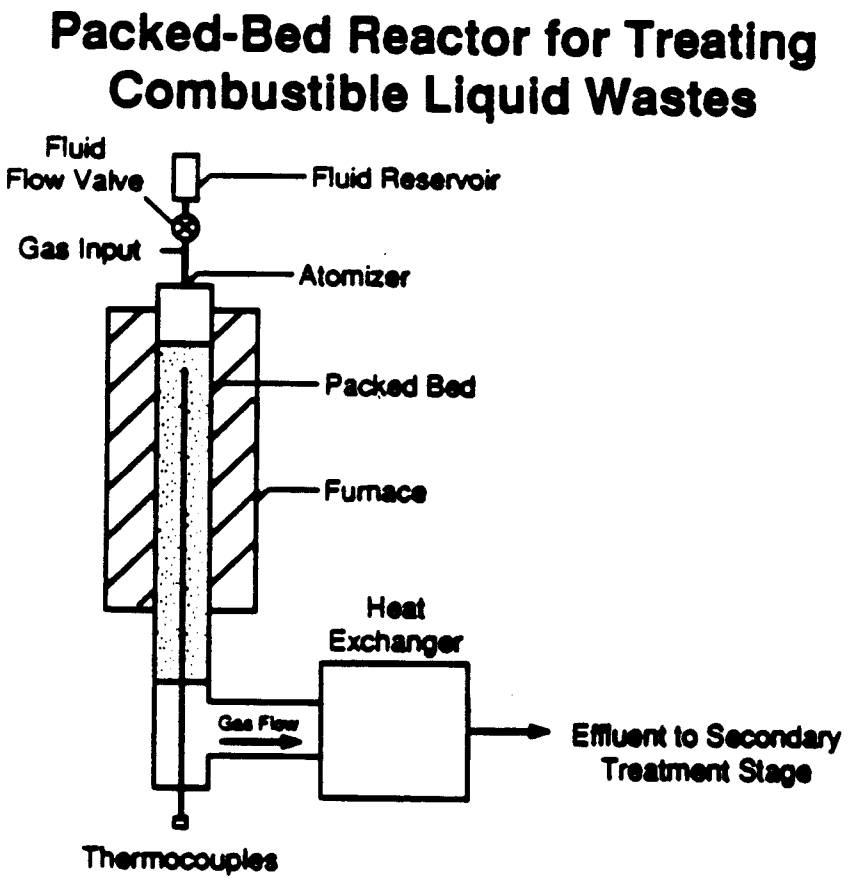

FIGURE 5

Cross-Section of Silent Discharge Plasma Unit

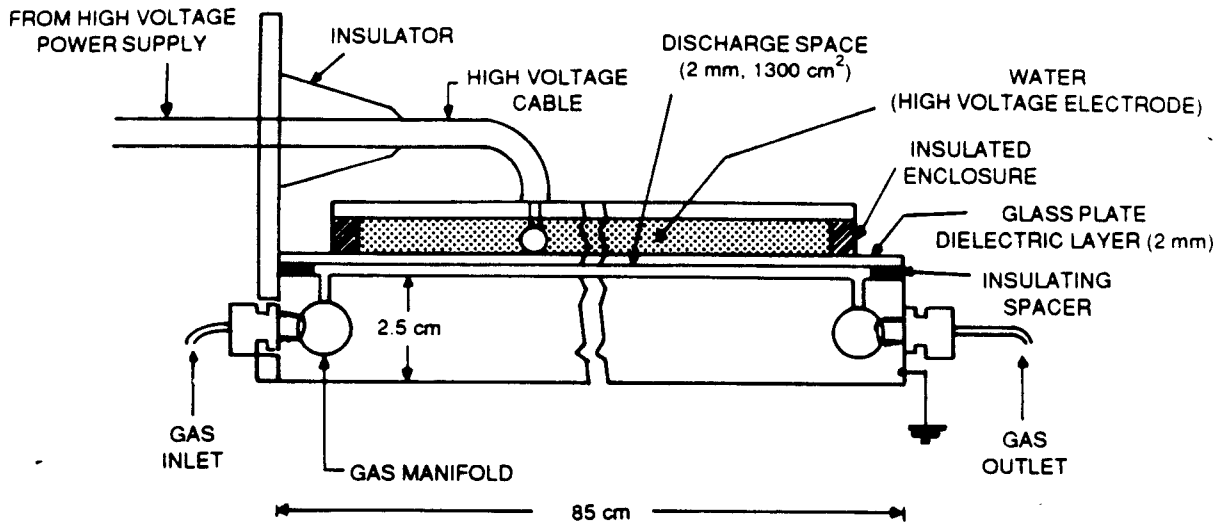

Source: L.A. Rosocha et al.

Figure 6:
Packed-Bed Reactor/Silent Discharge Plasma RD&D Unit: Open Loop Configuration

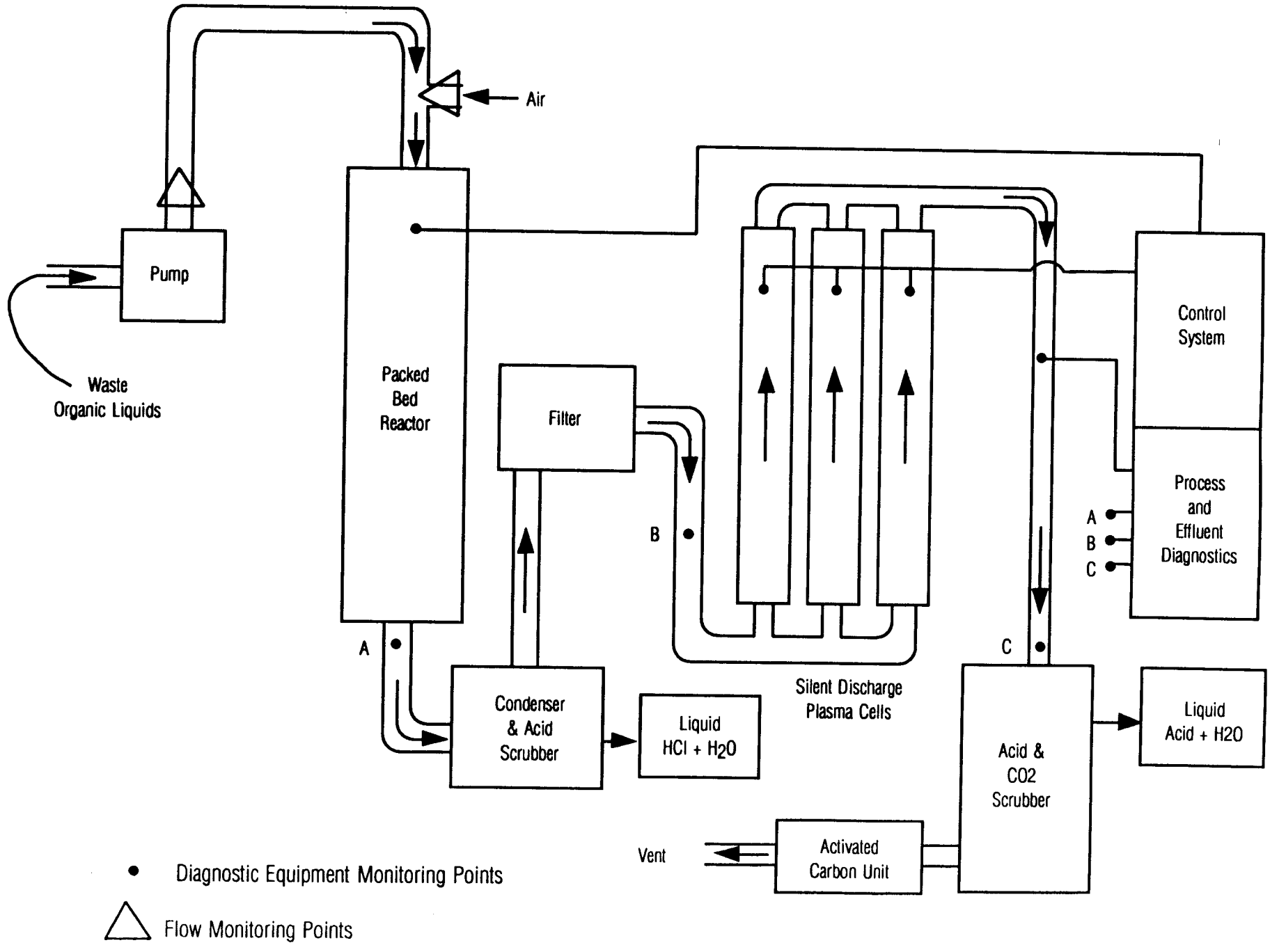

Figure 7:
Packed-Bed Reactor/Silent Discharge Plasma RD&D Unit: Closed Loop Configuration

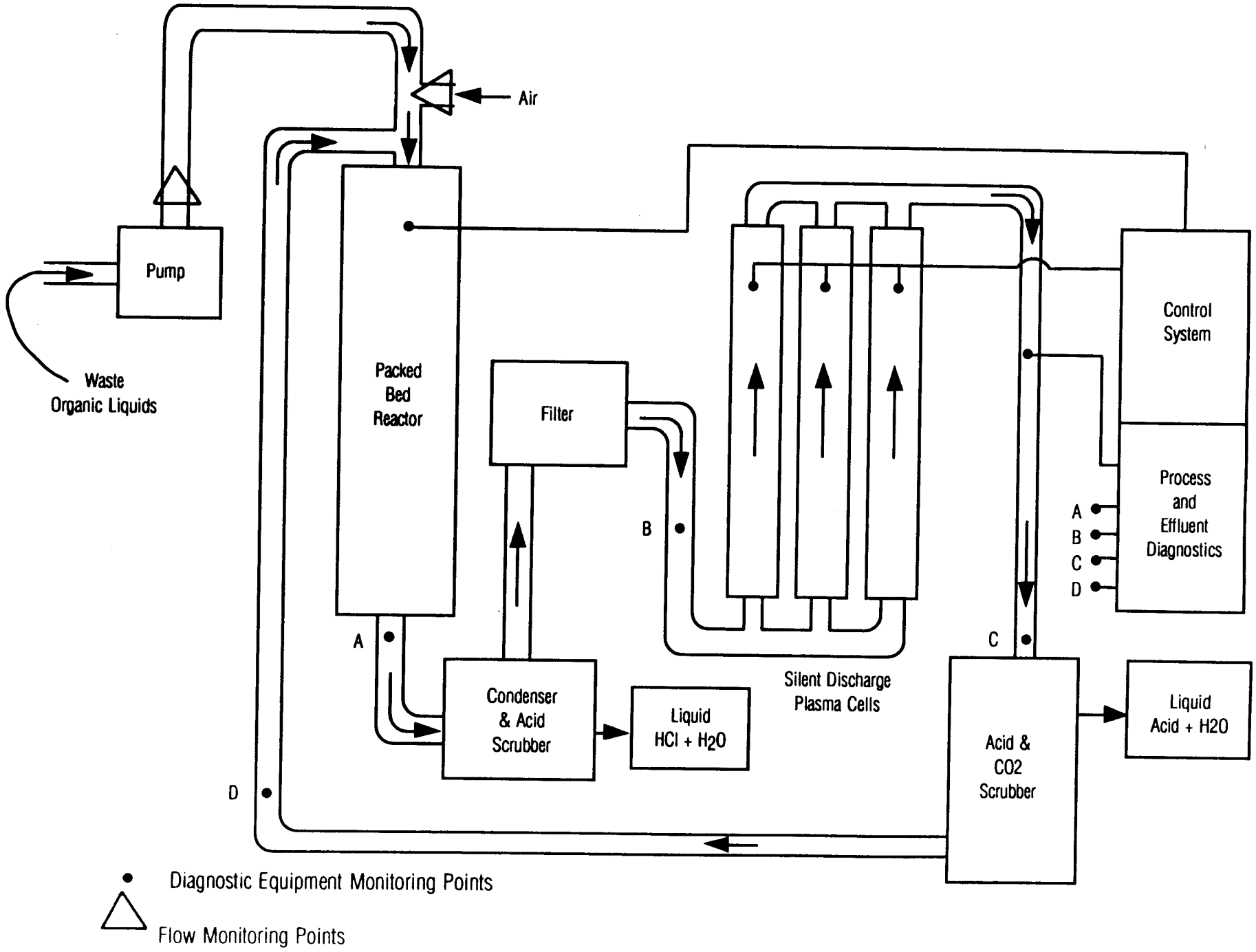

Solvent Screen

Laboratory Sample ID		L04026-11	L04026-12	L04026-13			
Date Received		10/1/92	10/1/92	10/1/92			
Date Collected		9/29/92	9/29/92	9/29/92			
Your Sample ID		9217	9218	9219			
Parameter	Units	Results	Results	Results	Results	Results	Results
Trichlorofluoroethane	% Wt	<0.10	<0.10	<0.01			
Tetrahydrofuran	% Wt	<0.10	<0.10	<0.01			
Isobutyl Acetate	% Wt	<0.10	<0.10	<0.01			
n-Propyl Acetate	% Wt	<0.10	<0.10	<0.01			
n-Propanol	% Wt	<0.10	<0.10	<0.01			
Cellosolve	% Wt	<0.10	<0.10	<0.01			
Cellosolve Acetate	% Wt	<0.10	<0.10	<0.01			
Butyl Cellosolve	% Wt	<0.10	<0.10	<0.01			
Butyl Cellosolve Acetate	% Wt	<0.10	<0.10	<0.01			

*Estimated Concentration

Copyright © 1991 Chemical Waste Management, Inc.

Fingerprint Analysis Report

Laboratory Sample ID			L04026-1	L04026-1	L04026-2	L04026-3	L04026-4
Date Received			10/1/92	10/1/92	10/1/92	10/1/92	10/1/92
Date Collected			9/29/92	9/29/92	9/29/92	9/29/92	9/29/92
Your Sample ID			9207 Layer 1	9207 Layer 2	9208	9209	9210
Parameter	Method	Units	Results	Results	Results	Results	Results
Color	D4979-89	NA	Gold Brown		Brown	Faint Green	Brown
Incidental Odor	D4979-89	NA	None		None	None	None
Physical State	D4979-89	NA	Liquid & Solid		Liquid & Solid	Liquid	Liquid
Layers	D4979-89	NA	Multilayered		Multilayered	Single	Single
Free Liquids	D4979-89	NA	40%		99%	100%	100%
Viscosity	D4979-89	NA	Low	N/A	Medium	Low	Low
Visual Oil & Grease	D4979-89	NA	Negative	Negative	Positive	Negative	Negative
pH	D4980	units	5.79		5.80	13.0	11.0
Cyanide Screen	D5049	NA	Negative		Negative	Negative	Negative
Sulfide Screen	D4978	NA	Negative		Negative	Negative	Negative
Flammability Potential	D4982	NA	Positive		Negative	Negative	Negative
Oxidizer Screen	D4981	NA	Negative		Negative	Negative	Negative
Radiation Screen	CWM 87-36	NA	At Background	At Background	At Background	At Background	At Background
Paint Filter	9095	NA	Fail	Pass	Fail	Fail	Fail
Water Mix Test Results	D5058-90						
Reactivity		NA	Negative	Negative	Negative	Negative	Negative
Temperature Rise		°F	0	0	0	-1	0
Water Solubility		NA	Soluble	Partially	Insoluble	Soluble	Soluble
Heavier and/or Lighter Than Water		NA	N/A	Heavier	Lighter	N/A	N/A
Emulsifies		NA	No	No	No	No	No
Precipitates		NA	No	No	No	No	No

Copyright © 1991 Chemical Waste Management, Inc.

Fingerprint Analysis Report

		Laboratory Sample ID	L04026-5	L04026-6	L04026-6	L04026-7	L04026-7
		Date Received	10/1/92	10/1/92	10/1/92	10/1/92	10/1/92
		Date Collected	9/29/92	9/29/92	9/29/92	9/29/92	9/29/92
		Your Sample ID	9211 Layer 1	9211 Layer 2	9212	9213 Layer 1	9213 Layer 2
Parameter	Method	Units	Results	Results	Results	Results	Results
Color	D4979-89	NA	Tan Brown		Colorless	Tan Brown	
Incidental Odor	D4979-89	NA	None		None	None	
Physical State	D4979-89	NA	Liquid & Solid		Liquid	Liquid & Solid	
Layers	D4979-89	NA	Multilayered		Single	Multilayered	
Free Liquids	D4979-89	NA	99%		100%	99%	
Viscosity	D4979-89	NA	Medium	Low	Low	Medium	Medium
Visual Oil & Grease	D4979-89	NA	Negative	Positive	Negative	Positive	Positive
pH	D4980	units	10.94		8.31	9.63	
Cyanide Screen	D5049	NA	Negative		Negative	Negative	
Sulfide Screen	D4978	NA	Negative		Negative	Negative	
Flammability Potential	D4982	NA	Positive		Positive	Positive	
Oxidizer Screen	D4981	NA	Negative		Negative	Negative	
Radiation Screen	CWM 87-38	NA	At Background	At Background	At Background	At Background	At Background
Paint Filter	9095	NA	Fail	Fail	Fail	Fail	Fail
Water Mix Test Results	D5058-90						
Reactivity		NA	Negative	Negative	Negative	Negative	Negative
Temperature Rise		°F	+1	0	0	0	0
Water Solubility		NA	Partially	Partially	Soluble	Insoluble	Partially
Heavier and/or Lighter Than Water		NA	Lighter	Lighter	N/A	Lighter	Both
Emulsifies		NA	No	No	No	No	No
Precipitates		NA	No	No	No	No	No

Copyright © 1991 Chemical Waste Management, Inc.

Fingerprint Analysis Report

		Laboratory Sample ID	L04026-7	L04026-8	L04026-9	L04026-10	L04026-10
		Date Received	10/1/92	10/1/92	10/1/92	10/1/92	10/1/92
		Date Collected	9/29/92	9/29/92	9/29/92	9/29/92	9/29/92
		Your Sample ID	9213 Layer 3	9214	9215	9216 Layer 1	9216 Layer 2
Parameter	Method	Units	Results	Results	Results	Results	Results
Color	D4979-89	NA		Blue	Yellow	Green/Tan/ Colorless	
Incidental Odor	D4979-89	NA		None	None	None	
Physical State	D4979-89	NA		Liquid	Liquid	Liquid & Solid	
Layers	D4979-89	NA		Single	Single	Multilayered	
Free Liquids	D4979-89	NA		100%	100%	40%	
Viscosity	D4979-89	NA	Low	Low	Low	Low	N/A
Visual Oil & Grease	D4979-89	NA	Positive	Negative	Negative	Negative	Negative
pH	D4980	units		8.76	2.41	1.75	
Cyanide Screen	D5049	NA		Negative	Negative	Negative	
Sulfide Screen	D4978	NA		Negative	Negative	Negative	
Flammability Potential	D4982	NA		Negative	Negative	Negative	
Oxidizer Screen	D4981	NA		Negative	Negative	Negative	
Radiation Screen	CWM 87-36	NA	At Background	At Background	At Background	At Background	At Background
Paint Filter	9095	NA	Fail	Fail	Fail	Fail	Pass
Water Mix Test Results	D5058-90						
Reactivity		NA	Negative	Negative	Negative	Negative	Negative
Temperature Rise		°F	0	0	-1	0	0
Water Solubility		NA	Partially	Partially	Soluble	Soluble	Insoluble
Heavier and/or Lighter Than Water		NA	Lighter	Lighter	N/A	N/A	Heavier
Emulsifies		NA	No	No	No	No	No
Precipitates		NA	No	No	No	No	No

Copyright © 1991 Chemical Waste Management, Inc.

Fingerprint Analysis Report

		Laboratory Sample ID	L04026-11	L04026-12	L04026-13	L04026-14	L04026-14
		Date Received	10/1/92	10/1/92	10/1/92	10/1/92	10/1/92
		Date Collected	9/29/92	9/29/92	9/29/92	9/29/92	9/29/92
		Your Sample ID	9217	9218	9219	9220 Layer 1	9220 Layer 2
Parameter	Method	Units	Results	Results	Results	Results	Results
Color	D4979-89	NA	Yellow	Orange	Brown/Grey	Purple Blue	
Incidental Odor	D4979-89	NA	None	None	None	None	
Physical State	D4979-89	NA	Liquid & Solid	Liquid & Solid	Liquid & Solid	Liquid & Solid	
Layers	D4979-89	NA	Multilayered	Multilayered	Multilayered	Multilayered	
Free Liquids	D4979-89	NA	99%	99.5	98%	95%	
Viscosity	D4979-89	NA	Low	Low	Low	Low	Low
Visual Oil & Grease	D4979-89	NA	Negative	Positive	Positive	Negative	Negative
pH	D4980	units	5.23	5.46	6.81	9.03	
Cyanide Screen	D5049	NA	Negative	Negative	Negative	Negative	
Sulfide Screen	D4978	NA	Negative	Negative	Negative	Negative	
Flammability Potential	D4982	NA	Positive	Positive	Negative	Negative	
Oxidizer Screen	D4981	NA	Negative	Negative	Negative	Negative	
Radiation Screen	CWM 87-36	NA	At Background	At Background	At Background	At Background	At Background
Paint Filter	9095	NA	Fail	Fail	Fail	Fail	Fail
Water Mix Test Results	D5058-90						
Reactivity		NA	Negative	Positive	Negative	Negative	Negative
Temperature Rise		°F	+1	+5	0	0	0
Water Solubility		NA	Insoluble	Partially	Partially	Soluble	Partially
Heavier and/or Lighter Than Water		NA	Lighter	Lighter	Both	N/A	Heavier
Emulsifies		NA	No	No	No	No	No
Precipitates		NA	No	No	No	No	No

Copyright © 1991 Chemical Waste Management, Inc.

ATTACHMENT 1

WASTE PROFILE INFORMATION

Los Alamos National Laboratory

RD&D PERMIT

Waste Profile Information

RD&D Permit

The following wastes may be treated in the PBR/SDP treatment unit. Waste profile information for these wastes is provided on the following sheets. Sample ID numbers associated with the wastes on the profile data sheets are listed below.

Waste Description	Hazardous Waste Code(s)	Sample ID No.
Oil with 1,1,1-Trichloroethane from cleaning and repairing of vacuum pumps.	F001	9213
Lacquer thinner from cleaning road painting equipment.	D001	9217
Mixture of acetone/ethanol from degreasing oily parts.	F003	9218

Solvent Screen

Laboratory Sample ID		L04026-2	L04026-5	L04026-6	L04026-7	L04026-8	L04026-10
Date Received		10/1/92	10/1/92	10/1/92	10/1/92	10/1/92	10/1/92
Date Collected		9/29/92	9/29/92	9/29/92	9/29/92	9/29/92	9/29/92
Your Sample ID		9208	9211	9212	9213	9214	9216
Parameter	Units	Results	Results	Results	Results	Results	Results
Trichlorofluoromethane	% Wt	<0.10	<0.10	<0.10	<0.10	<0.01	<0.01
Methanol	% Wt	<0.30	<0.30	<0.30	<0.30	<0.03	<0.03
Ether	% Wt	<0.10	<0.10	<0.10	<0.10	<0.01	<0.01
1,1,2-Trichloro-1,2,2-trifluoroethane	% Wt	<0.10	<0.10	84.4	<0.10	<0.01	<0.01
Ethanol	% Wt	<0.10	<0.10	<0.10	<0.10	<0.01	<0.01
Acetone	% Wt	<0.10	<0.10	<0.10	<0.10	<0.01	<0.01
Isopropanol	% Wt	<0.10	<0.10	12.	<0.10	<0.01	<0.01
Methylene Chloride	% Wt	<0.10	<0.10	<0.10	<0.10	<0.01	<0.01
Ethyl Acetate	% Wt	<0.10	<0.10	<0.10	<0.10	<0.01	<0.01
1,1,1-Trichloroethane	% Wt	<0.10	<0.10	<0.10	[0-1.5]	<0.01	<0.01
Methyl Ethyl Ketone	% Wt	<0.10	<0.10	<0.10	<0.10	<0.01	<0.01
Carbon Tetrachloride	% Wt	<0.10	<0.10	<0.10	[0-6.1]	<0.01	<0.01
Chloroform	% Wt	<0.10	<0.10	<0.10	<0.10	<0.01	<0.01
Benzene	% Wt	<0.10	<0.10	<0.10	<0.10	<0.01	<0.01
Isobutanol	% Wt	<0.10	<0.10	<0.10	<0.10	<0.01	<0.01
Trichloroethylene	% Wt	<0.10	<0.10	<0.10	<0.10	<0.01	<0.01
N-Butanol	% Wt	<0.10	<0.10	<0.10	<0.10	<0.01	<0.01
Toluene	% Wt	<0.10	<0.10	<0.10	<0.10	<0.01	<0.01
2-Ethoxyethanol	% Wt	<0.10	<0.10	<0.10	<0.10	<0.01	<0.01
Methyl Isobytyl Ketone	% Wt	<0.10	<0.10	<0.10	<0.10	<0.01	<0.01
Tetrachloroethylene	% Wt	<0.10	<0.10	<0.10	<0.10	<0.01	<0.01
Butyl Acetate	% Wt	<0.10	<0.10	<0.10	<0.10	<0.01	<0.01
Chlorobenzene	% Wt	<0.10	<0.10	<0.10	<0.10	<0.01	<0.01
Ethylbenzene	% Wt	<0.10	<0.10	<0.10	<0.10	<0.01	<0.01
Xylenes	% Wt	<0.10	<0.10	<0.10	<0.10	<0.01	<0.01
Styrene	% Wt	<0.10	<0.10	<0.10	<0.10	<0.01	<0.01
2-Ethoxyethanol Acetate	% Wt	<0.10	<0.10	<0.10	<0.10	<0.01	<0.01
Cyclohexanone	% Wt	<0.10	<0.10	<0.10	<0.10	<0.01	<0.01
2-Butoxyethanol	% Wt	<0.10	<0.10	<0.10	<0.10	<0.01	<0.01
Dichlorobenzene	% Wt	<0.10	<0.10	<0.10	<0.10	<0.01	<0.01
Hydrocarbons (as HC)*	% Wt	3.9	.43	.74	1.3	<0.01	<0.01
High Boiling Point Organics*	% Wt	43.5	.72	.88	0.8	<0.01	<0.01
Hexane	% Wt	<0.10	<0.10	<0.10	<0.10	<0.01	<0.01
Heptane	% Wt	<0.10	<0.10	<0.10	<0.10	<0.01	<0.01

Copyright © 1991 Chemical Waste Management, Inc.

Solvent Screen

Laboratory Sample ID		L04026-2	L04026-5	L04026-6	L04026-7	L04026-8	L04026-10
Date Received		10/1/92	10/1/92	10/1/92	10/1/92	10/1/92	10/1/92
Date Collected		9/29/92	9/29/92	9/29/92	9/29/92	9/29/92	9/29/92
Your Sample ID		9208	9211	9212	9213	9214	9216
Parameter	Units	Results	Results	Results	Results	Results	Results
Trichlorofluoroethane	% Wt	<0.10	<0.10	<0.10	<0.10	<0.01	<0.01
Tetrahydrofuran	% Wt	<0.10	<0.10	<0.10	<0.10	<0.01	<0.01
Isobutyl Acetate	% Wt	<0.10	<0.10	<0.10	<0.10	<0.01	<0.01
n-Propyl Acetate	% Wt	<0.10	<0.10	<0.10	<0.10	<0.01	<0.01
n-Propanol	% Wt	<0.10	<0.10	<0.10	<0.10	<0.01	<0.01
Cellosolve	% Wt	<0.10	<0.10	<0.10	<0.10	<0.01	<0.01
Cellosolve Acetate	% Wt	<0.10	<0.10	<0.10	<0.10	<0.01	<0.01
Butyl Cellosolve	% Wt	<0.10	<0.10	<0.10	<0.10	<0.01	<0.01
Butyl Cellosolve Acetate	% Wt	<0.10	<0.10	<0.10	<0.10	<0.01	<0.01

* Estimated Concentration

Copyright © 1991 Chemical Waste Management, Inc.

Solvent Screen

Laboratory Sample ID		L04026-11	L04026-12	L04026-13			
Date Received		10/1/92	10/1/92	10/1/92			
Date Collected		9/29/92	9/29/92	9/29/92			
Your Sample ID		9217	9218	9219			
Parameter	**Units**	**Results**	**Results**	**Results**	**Results**	**Results**	**Results**
Trichlorofluoromethane	% Wt	<0.10	<0.10	<0.01			
Methanol	% Wt	<0.30	<0.30	<0.03			
Ether	% Wt	<0.10	<0.10	<0.01			
1,1,2-Trichloro-1,2,2-trifluoroethane	% Wt	<0.10	<0.10	<0.01			
Ethanol	% Wt	<0.10	33.5	<0.01			
Acetone	% Wt	<0.10	19.0	<0.01			
Isopropanol	% Wt	<0.10	.86	<0.01			
Methylene Chloride	% Wt	<0.10	<0.10	<0.01			
Ethyl Acetate	% Wt	<0.10	<0.10	<0.01			
1,1,1-Trichloroethane	% Wt	<0.10	[0-4]	<0.01			
Methyl Ethyl Ketone	% Wt	20.7	<0.10	<0.01			
Carbon Tetrachloride	% Wt	<0.10	[0-15]	<0.01			
Chloroform	% Wt	<0.10	<0.10	<0.01			
Benzene	% Wt	<0.10	<0.10	<0.01			
Isobutanol	% Wt	<0.10	<0.10	<0.01			
Trichloroethylene	% Wt	<0.10	<0.10	<0.01			
N-Butanol	% Wt	<0.10	<0.10	<0.01			
Toluene	% Wt	43.7	<0.10	<0.01			
2-Ethoxyethanol	% Wt	<0.10	<0.10	<0.01			
Methyl Isobutyl Ketone	% Wt	<0.10	<0.10	<0.01			
Tetrachloroethylene	% Wt	0.39	<0.10	<0.01			
Butyl Acetate	% Wt	0.12	<0.10	<0.01			
Chlorobenzene	% Wt	<0.10	<0.10	<0.01			
Ethylbenzene	% Wt	<0.10	<0.10	<0.01			
Xylenes	% Wt	0.57	3.3	<0.01			
Styrene	% Wt	<0.10	<0.10	<0.01			
2-Ethoxyethanol Acetate	% Wt	<0.10	<0.10	<0.01			
Cyclohexanone	% Wt	<0.10	<0.10	<0.01			
2-Butoxyethanol	% Wt	2.3	<0.10	<0.01			
Dichlorobenzene	% Wt	<0.10	<0.10	<0.01			
Hydrocarbons (as HC)*	% Wt	14.4	.94	<0.01			
High Boiling Point Organics*	% Wt	0.69	.25	<0.01			
Hexane	% Wt	<0.10	<0.10	<0.01			
Heptane	% Wt	<0.10	<0.10	<0.01			

Copyright © 1992 Chemical Waste Management, Inc.

Wet Chemistry

		Laboratory Sample ID	L04026-1	L04026-3	L04026-4	L04026-5	L04026-7
		Date Received	10/1/92	10/1/92	10/1/92	10/1/92	10/1/92
		Date Collected	9/29/92	9/29/92	9/29/92	9/29/92	9/29/92
		Your Sample ID	9207	9209	9210	9211	[illegible]
Parameter	**Method**	**Units**	**Results**	**Results**	**Results**	**Results**	**Results**
Alkalinity	CWM 91-68	%		3.6			
Water (by Karl Fischer)	CWM 91-65	%	98.8	94.2	85.1	Top 3.5 Bottom 98.3	Top 2.1 Bottom 83.2

Wet Chemistry

		Laboratory Sample ID	L04026-8	L04026-9	L04026-10	L04026-11	L04026-12
		Date Received	10/1/92	10/1/92	10/1/92	10/1/92	10/1/92
		Date Collected	9/29/92	9/29/92	9/29/92	9/29/92	9/29/92
		Your Sample ID	9214	9215	9216	9217	9218
Parameter	**Method**	**Units**	**Results**	**Results**	**Results**	**Results**	**Results**
Acidity	CWM 91-68	%		1.4			
Water (by Karl Fischer)	CWM 91-65	%	97.7	96.6		4.6	14.2

Wet Chemistry

		Laboratory Sample ID	L04026-13	L04026-14			
		Date Received	10/1/92	10/1/92			
		Date Collected	9/29/92	9/29/92			
		Your Sample ID	9219	9220			
Parameter	**Method**	**Units**	**Results**	**Results**	**Results**	**Results**	**Results**
Water (by Karl Fischer)	CWM 91-65	%	98.5	92.4			

Copyright © 1991 Chemical Waste Management, Inc.

Metals By EPA Methods

		Laboratory Sample ID	L04026-1	L04026-2	L04026-3	L04026-4	L04026-5	L04026-6
		Date Received	10/1/92	10/1/92	10/1/92	10/1/92	10/1/92	10/1/92
		Date Collected	9/29/92	9/29/92	9/29/92	9/29/92	9/29/92	9/29/92
		Extraction Method	Total	Total	Total	Total	Total	Total
		Your Sample ID	9207	9208	9209	9210	9211	9212
Parameter	Method	Units	Results	Results	Results	Results	Results	Results
Arsenic (As)	6010	mg/kg	<2.25	<2.25	<2.25	<2.25	<2.25	<2.25
Barium (Ba)	6010	mg/kg	<0.250	<0.250	<0.250	<0.250	0.411	<0.250
Cadmium (Cd)	6010	mg/kg	<0.450	<0.450	<0.450	<0.450	<0.450	<0.450
Chromium (Cr)	6010	mg/kg	<0.900	<0.900	<0.900	<0.900	0.904	<0.900
Lead (Pb)	6010	mg/kg	<3.25	162.	<3.25	<3.25	4.01	<3.25
Mercury (Hg)	7471	mg/kg	<0.09	<0.09	<0.09	<0.09	<0.09	<0.09
Selenium (Se)	6010	mg/kg	<3.75	<3.75	<3.75	<3.75	<3.75	<3.75
Silver (Ag)	6010	mg/kg	<1.08	<1.08	<1.08	45.2	<1.08	<1.08
Anions								
Bromide, Total	300.0	%	<0.46	<0.46	<0.46	<0.46	<0.46	<0.40
Chloride, Total	300.0	%	2.20	<0.40	0.406	<0.40	0.40	25.4
Fluoride, Total	300.0	%	<0.084	<0.084	0.377	0.109	<0.084	10.1
Sulfate, Total	300.0	%	<1.10	<1.10	<1.10	3.10	1.21	<0.46

Copyright © 1991 Chemical Waste Management, Inc.

Certificate Of Analysis

Metals By EPA Methods

		Laboratory Sample ID	L04026-7	L04026-8	L04026-9	L04026-10	L04026-11	L04026-12
		Date Received	10/1/92	10/1/92	10/1/92	10/1/92	10/1/92	10/1/92
		Date Collected	9/29/92	9/29/92	9/29/92	9/29/92	9/29/92	9/29/92
		Extraction Method	Total	Total	Total	Total	Total	Total
		Your Sample ID	9213	9214	9215	9216	9217	9218
Parameter	Method	Units	Results	Results	Results	Results	Results	Results
Arsenic (As)	6010	mg/kg	<2.25	<2.25	<2.25	<2.25	<2.25	<2.25
Barium (Ba)	6010	mg/kg	30.6	<0.250	<0.250	3.99	<0.250	<0.250
Cadmium (Cd)	6010	mg/kg	<0.450	<0.450	<0.450	<0.450	<0.450	<0.450
Chromium (Cr)	6010	mg/kg	<0.900	<0.900	2.91	<0.900	97.5	<0.900
Iron (Fe)	6010	mg/kg			5780.			
Lead (Pb)	6010	mg/kg	28.7	<3.25	<3.25	4.31	450.	<3.25
Mercury (Hg)	7471	mg/kg	<0.09	<0.09	<0.09	<0.09	<0.09	<0.09
Molybdenum (Mo)	6010	mg/kg				3300.		
Selenium (Se)	6010	mg/kg	<3.75	<3.75	<3.75	70.4	<3.75	<3.75
Silver (Ag)	6010	mg/kg	<1.08	<1.08	<1.08	<1.08	<1.08	<1.08
Anions								
Bromide, Total	300.0	%	<0.46	<0.46	<0.46	<0.46	<0.40	<0.40
Chloride, Total	300.0	%	0.890	<0.40	1.16	0.412	2.20	2.43
Fluoride, Total	300.0	%	<0.084	<0.084	<0.084	<0.084	<0.24	<0.24
Sulfate, Total	300.0	%	<1.10	<1.10	<1.10	3.72	0.470	<0.46

Copyright © 1991 Chemical Waste Management, Inc.

Metals By EPA Methods

		Laboratory Sample ID	L04028-13	L04028-14				
		Date Received	10/1/92	10/1/92				
		Date Collected	9/29/92	9/29/92				
		Extraction Method	Total	Total				
		Your Sample ID	9219	9220				
Parameter	Method	Units	Results	Results	Results	Results	Results	Results
Arsenic (As)	6010	mg/kg	<2.25	<2.25				
Barium (Ba)	6010	mg/kg	0.298	<0.250				
Cadmium (Cd)	6010	mg/kg	<0.450	<0.450				
Chromium (Cr)	6010	mg/kg	<0.900	<0.900				
Lead (Pb)	6010	mg/kg	<3.25	174.				
Mercury (Hg)	7471	mg/kg	<0.09	0.86				
Selenium (Se)	6010	mg/kg	<3.75	<3.75				
Silver (Ag)	6010	mg/kg	<1.08	<1.08				
Anions								
Bromide, Total	300.0	%	<0.46	<0.40				
Chloride, Total	300.0	%	<0.40	1.08				
Fluoride, Total	300.0	%	<0.084	<0.024				
Sulfate, Total	300.0	%	<1.10	0.504				

Copyright © 1991 Chemical Waste Management, Inc.

		Laboratory Sample ID	L04026-2	L04026-5	L04026-7	L04026-8	L04026-13
		Date Received	10/1/92	10/1/92	10/1/92	10/1/92	10/1/92
		Date Collected	9/29/92	9/29/92	9/29/92	9/29/92	9/29/92
		Your Sample ID	9208	9211	9213	9214	9219
Parameter	Method	Units	Results	Results	Results	Results	Results
Individual Determination							
Oil & Grease	413.2	mg/L				708.	2800.
Oil & Grease	413.2	%	100.	12.9	100.		

Copyright © 1991 Chemical Waste Management, Inc.

CMWO WASTE DATA FORM COPY

Container # : C92031163	Requestor : BOOKWALTER EARL C
	Group : JCI
CWDR # : 1003140	Phone : 74231
	TA : 03
	Building : 38
	Room : 103
DT_ID # : 92791	Z # : 070052

LESS THAN 90 DAYS (START DATE: 01-JUL-92)

WASTE GENERATED OR ACCUMULATED IN A RADIOLOGICAL MATERIAL MANAGEMENT AREA: NO

WASTE ACCUMULATED OR STORED IN A SECURITY AREA: NO

Shipping Name : WASTE PAINT RELATED MATERIAL
Hazard Code : Flammable Liquid
DOT # : NA1263

EM-7 Code : 00	Other Con # :
Storage Code : B1	Container Type : DM
RGN # : 101	Container Vol : 55 G
Treat/Disp Loc : OSCO	Reviewed By : 090019
Transported By : CWM	Data Entry By : 100600
	Qa Check By :
Other Document :	
AreaG/J Loc :	Picked Up By/Date&Time : 093697 / 31-AUG-92 03:15
	Load Check By/Date : 109141 / 31-AUG-92
Treat/Ship By : CWM	Pickup Update Check By :
Treat/Ship Date : 27-OCT-92	
	Off-Site Check By/Date :
TSDF Date :	
Destruction # :	Update By/Date : 107045 / 27-OCT-92
Destruction Date :	Final Update Check By :

Item 1 : LACQUER THINNER
WPN : 01584
EPA Code : D001

Volume: 55 G Weight: 500 P

CMWO WASTE DATA FORM COPY

Container # : C92031222	Requestor : GLADWELL CLIFFORD Group : MP8 Phone : 75973 TA : 53 Building : 2 Room : 105 Z # : 032777
CWDR # : 1003048	
DT_ID # : 92791	

SATELLITE

WASTE GENERATED OR ACCUMULATED IN A RADIOLOGICAL MATERIAL MANAGEMENT AREA: NO

WASTE ACCUMULATED OR STORED IN A SECURITY AREA: NO

Shipping Name : WASTE FLAMMABLE LIQUID, N.O.S. (ACETONE,ALCOHOL)
Hazard Code : Flammable Liquid
DOT # : UN1993

EM-7 Code : 00	Other Con # :
Storage Code : B1	Container Type : DM
RGN # : 101	Container Vol : 30 G
Treat/Disp Loc : OSCO	Reviewed By : 090019
Transported By : CWM	Data Entry By : 101956
	Qa Check By :
Other Document :	
AreaG/J Loc :	Picked Up By/Date&Time : 109153 / 14-SEP-92 01:15
	Load Check By/Date : 109141 / 14-SEP-92
Treat/Ship By : CWM	Pickup Update Check By :
Treat/Ship Date : 27-OCT-92	
	Off-Site Check By/Date :
TSDF Date :	
Destruction # :	Update By/Date : 107045 / 27-OCT-92
Destruction Date :	Final Update Check By :

Item 1 : MIXED ACETONE & ETHANOL
WPN : 04285
EPA Code : F003

Volume: 30 G Weight: 50 P

CMWO WASTE DATA FORM COPY

Container # : C92031275	Requestor : BINGHAM BARRY L
	Group : MST6
CWDR # : 1003185	Phone : 71147
	TA : 03
	Building : 66
DT_ID # : 92791	Room : R112
	Z # : 095788

SATELLITE

WASTE GENERATED OR ACCUMULATED IN A RADIOLOGICAL MATERIAL MANAGEMENT AREA: NO

WASTE ACCUMULATED OR STORED IN A SECURITY AREA: YES

Shipping Name : HAZARDOUS WASTE, LIQUID, N.O.S. (1,1,1 TRICHLOROETHANE)
Hazard Code : ORM-E
DOT # : NA9189

EM-7 Code :	00	Other Con # :	
Storage Code :	B6	Container Type :	DM
RGN # :	17	Container Vol :	30 G
Treat/Disp Loc :	OSCO	Reviewed By :	090019
Transported By :	CWM	Data Entry By :	100600
		Qa Check By :	
Other Document :			
AreaG/J Loc :		Picked Up By/Date&Time :	088896 / 10-SEP-92 01:25
		Load Check By/Date :	109141 / 10-SEP-92
Treat/Ship By :	CWM	Pickup Update Check By :	
Treat/Ship Date :	27-OCT-92		
		Off-Site Check By/Date :	
TSDF Date :			
Destruction # :		Update By/Date :	107045 / 27-OCT-92
Destruction Date :		Final Update Check By :	

Item 1 : PUMP OIL W/TRACE 1,1,1 TRICHLOROETHANE
WPN : 04255 Volume: 35 G Weight: 230 P
EPA Code : F001

ATTACHMENT 2

WASTE ANALYSIS PLAN

Los Alamos National Laboratory

RD&D PERMIT

WASTE ANALYSIS PLAN

PACKED-BED REACTOR/SILENT DISCHARGE PLASMA TREATMENT UNIT

RD&D PERMIT

Los Alamos National Laboratory
Environmental Protection Group
Los Alamos, NM 87545

December 1992

WASTE ANALYSIS PLAN
LOS ALAMOS NATIONAL LABORATORY

RD&D PERMIT

1.0 WASTE ANALYSIS

This document specifies the procedures for the identification and handling of hazardous wastes for storage at the Laboratory. While only a limited number of known wastes will be managed in the RD&D treatment unit, this waste analysis plan describes the procedures for managing all wastes lab wide. This will ensure that any waste that is generated as part of the RD&D process will be properly characterized and managed.

The decision process for waste characterization and analysis is summarized in Table A-1.

1.1 Waste Analysis and Handling Procedures for Storage

When chemical substances are declared to be in excess, the originating group completes a Chemical Waste Disposal Request (Form 10-3A Part A, Figure A-1) and sends the form to the Waste Management Group (EM-7). The request lists the chemical waste the generating group needs to dispose of, the quantity and physical form of the wastes, and other pertinent information such as the condition of the containers. Material Safety Data Sheets (MSDSs) and existing analysis data may also be available and attached.

Using Part B of the Request Form (Form 10-3A Part B, Figure A-1), EM-7 staff can assign a Reactivity Group Number (RGN) to each container or bottle. The RGN is found from Figure A-2 (excerpted from EPA-600/2-80-076). The referenced EPA document, "A Method for Determining the Compatibility of Hazardous Waste," serves as the basis for the Laboratory procedure. For additional information, the user is referred to the EPA document cited. Additional information assigned during this review includes EPA codes and transportation information. The completed request form, container label, and MSDS/analytical data serve as the waste analysis record for the waste to be stored per the following segregation schemes.

1.2 Waste Segregation

To prevent adverse interactions of incompatible chemical wastes and to facilitate recycling or treatment of wastes, chemical wastes will be segregated into the following general categories:

- Organics, including solvent wastes such as acetone, benzene, and toluene.

- Corrosive acidic wastes, including organic and mineral acids.

- Corrosive caustic wastes.

- Oxidizers, such as perchloric or chromic acid, and nonacidic oxidizers, such as permanganates and chlorates.

- Reactive metals and compounds, such as sodium, lithium hydride, and phosphorous trichloride.

- Nonreactive metals, salts, and neutral compounds, such as lead and barium salts, and cyanide or sulfide compounds (in <5 gal. quantities only).

Utilizing the RGN assigned to the container and Table A-2, an area for storage of the waste is assigned. The organics and oxidizers have subcategories of segregation that will be followed by packaging/compositing of wastes to ensure that potential incompatibles are not combined together.

2.0 WASTE ANALYSIS AND HANDLING PROCEDURES FOR TREATMENT AND DISPOSAL

The analysis and handling procedures for waste requiring treatment and/or disposal follows. The decision process is summarized in Table A-1.

Several terms used throughout this section require further explanation.

- LDR is land disposal restricted. When used in this section it refers to all waste currently regulated under 40 CFR 268.

- TCLP metals means those eight metals regulated under the Toxicity Characteristic Leaching Procedure.

- KOP refers to knowledge of process. In the case of original containers of materials, the information from the Chemical Disposal Request Form, as described earlier, is the KOP documentation. All other waste is documented by previous analyses or information provided by the generator.

- Labpack waste refers to original containers of hazardous materials no greater than 5 gallons in size.

- Coliwasa sampler also includes the use of coliwasa type sampling apparatus. Other equivlanent EPA SW-846 sampling methods, such as use of tubing or dipper, may be substituted for the coliwasa sampler.

2.1 Organic Waste

Organic waste is split into four processing categories: uncomposited labpack waste, drummed material, composited labpack waste, and composited drummed waste. The following discussions treat each as a unique analysis entity.

2.1.1 Uncomposited Labpack Waste

These wastes are those, that due to their toxicity or their physical (solid) state, will not be composited but will be packaged in overpack containers with absorbent. The entire container is then incinerated. The Laboratory's incinerator cannot generally receive such a package, therefore, most of this waste is and will be shipped offsite. The packing list of bottles and cans in the overpack container serves as the analytical record. This listing is sufficient to allow the identification of any and all LDR waste.

2.1.2 Drummed Waste

There are very few ongoing operations at the Laboratory that generate an organic process waste. As a result, each drum of this waste is virtually a unique entity. The exception would be those cases where we know more than one drum of waste came from the same place, e.g., 400 gallons of oil drained from the same machine reservoir. The drums are also sampled using a coliwasa or equivalent sampler if liquid or a core sampler if solid. Since this waste is destined for incineration, the following parameters are tested for: pH, ash content, viscosity, heat value, TCLP metals, total organic halogen, total organic chlorine, sulfur, and chemical composition. This latter will identify approximately ninety-five percent of the substances that are present in the waste. Availability of documented KOP will determine if the organic trace analyses need to be performed. Documentation or analyses will identify the presence/absence of organic LDR compounds, trichlorofluoromethane, bromoform, dichlorodifluoromethane and ethylene dibromide. These latter four compounds are only necessary if the waste is to be incinerated onsite. The test methods are listed in Table A-3.

Throughout the year, container of organic waste mixtures, smaller than a 55-gallon drum, are generated in the many laboratories at LANL. The generator maintains a list of the substances placed in these containers. This allows EM-7 personnel to confirm compatibility of these wastes before they are composited into 55-gallon or larger containers. When the composite receptacle is full, the waste is analyzed as described above for any large container of organic waste.

Solid organic waste is sampled using a core sampler or a grab sampler if the material can not be penetrated by a core sampler. Analytical parameters, frequencies, and test methods would be the same as those outlined above for any large container of waste.

Debris that is organically contaminated is analyzed per Section 2.8.

2.1.3 Composited Labpack Waste

Composited labpack wastes are those bottles and cans of liquid waste that have been combined for the purpose of incineration. Compatibility is ensured by following the procedures in Section 1.1 and 1.2. Since all the chemicals in a composite drum are known entities, the list of chemicals and their quantity serves as the primary analysis record. This listing is sufficient to allow the identification of any and all LDR waste. When the drum is full, it is sampled with a coliwasa or equivalent sampler. Since chemical composition is known, only the physical parameters need to be calculated or analyzed for. If any physical characteristics can not be calculated due to the variety of substances placed in the drum, the sample is analyzed for that parameter. Therefore, analysis or calculation would provide pH, flashpoint, ash content, viscosity, heat value, total organic halogens, and total organic chlorine. The methods used for these analyses are specified in Table A-3. This will be done for each container of composited waste since each container is unique.

2.1.4 Composited Drummed Waste

Composited drummed waste are those drums of waste for which the analytical data described in Section 2.1.3 already exists and are combined in either the TA-54, Area L storage tanks or the liquid feed tanks at the incinerator for the purposes of offsite shipment or onsite incineration. Compatibility is ensured by following the procedures in Sections 1.1 and 1.2. Chemical and physical parameters can be calculated from the existing data. If at any time calculations of physical parameters, such as heat value, is inadequate, those identified analyses will be redone. The calculations will be performed on each unique tank of waste.

2.2 Corrosive Acid Waste

Corrosive acid waste is handled in two primary processing categories: labpack and process waste. The following discussions treat each as a unique analysis entity.

2.2.1 Labpack Waste

This wastestream consists of original containers of acid waste. The labels on the containers continue to serve as the primary analytical record. Those acids that can be reused by another component of the Laboratory are redistributed for use as a raw material. Those that can not be reused are treated by elementary neutralization. This occurs primarily at the TA-50 Liquid Waste Treatment Plant but could occur throughout LANL in individual laboratories.

2.2.2 Process Waste

There are three categories of process waste: nonroutine nonmetallic waste, nonroutine metallic waste, and routine waste. Each is discussed separately. Documented KOP will negate the concern for the presence of LDR organic compounds. Therefore, references to LDR in this section refers only to inorganic constituents.

Nonroutine nonmetallic waste is periodically generated throughout the Laboratory. This waste will be analyzed for pH, the TCLP metals, nickel and thallium. This allows confirmation of the presence/absence of LDR material. The test methods employed are listed in Table A-3. Sampling is performed using a coliwasa or equivalent sampler. Because this is defined as a nonroutine wastestream, every unique drum or batch will be sampled.

Nonroutine metallic waste is generated primarily by the Laboratory's electroplating operations. At the time of generation, these wastes are identified by the generator as containing heavy metals. The generator may also provide the approximate metal concentration, if the information is available. This waste will be analyzed for pH, TCLP metals, nickel and thallium. This allows confirmation of the presence of LDR material and establishes the parameters that are analyzed for at the completion of treatment. The test methods employed are listed in Table A-3. Sampling is performed using a coliwasa or equivalent sampler. Because this is identified as a nonroutine wastestream, every unique drum or batch will be sampled.

There are five routinely generated acidic wastestreams at Los Alamos: nonmetallic nitric acid, nonmetallic sulfuric acid, nonmetallic acid stream, metallic ferric chloride, and metallic ammonium persulfate. Each of these streams has a confirmed basis for RCRA regulation which establishes the parameters of concern for treatment. All three of the nonmetallic acid streams are routinely analyzed for pH. The metallic ferric chloride is analyzed for pH, chromium, silver, lead, and copper. The metallic ammonium persulfate is analyzed for pH, lead, and mercury. Annually, all of these streams are all reevaluated for pH, TCLP metals, nickel, and thallium. This allows confirmation that the waste has not changed in composition and what LDR components are present. Sampling is conducted with a coliwasa or equivalent sampler. All test methods are listed in Table A-3.

If a nonroutine wastestream becomes a routine waste or a new wastestream is identified, it will follow the pattern established in the above paragraph. Routine testing parameters will be established and reverified on an annual basis.

2.3 Corrosive Basic Waste

Corrosive basic waste is split into two processing categories: labpack waste and process waste. The following discussions treat each as a unique analysis entity.

2.3.1 Labpack Waste

This wastestream consists of original containers of basic waste. The labels on the containers serve as the primary analytical record. Those bases that can be reused by another component of the Laboratory are redistributed for use as a raw material. Those that can not be reused are generally treated by elementary neutralization. This occurs primarily at the TA-50 Liquid Waste Treatment Plant but could occur throughout LANL in individual laboratories.

2.3.2 Process Waste

There are three categories of process waste: nonroutine nonmetallic waste, nonroutine metallic waste, and routine waste. Each is discussed separately. Documented KOP will negate the concern for organic LDR compounds. Therefore, references to LDR in this section refers only to inorganic constituents.

Nonroutine nonmetallic waste is periodically generated throughout the Laboratory. This waste will be analyzed for pH, the TCLP metals, nickel and thallium. This allows confirmation of the presence of LDR material. The test methods employed are listed in Table A-3. Sampling is performed using a coliwasa or equivalent sampler. Because this is defined as a nonroutine wastestream, every unique drum or batch will be sampled.

Nonroutine metallic waste is generated primarily by the Laboratory's electroplating operations. At the time of generation, these wastes are identified by the generator as containing heavy metals. This waste will be analyzed for pH, TCLP metals, nickel, thallium, and cyanide. This procedure allows confirmation of the presence of LDR material and establishes the parameters that are analyzed for at the completion of treatment. The test methods employed are listed in Table A-3. Sampling is performed using a coliwasa or equivalent sampler. Because this is defined as a nonroutine wastestream, every unique drum or batch will be sampled.

There are three routinely generated corrosive base process wastestreams at Los Alamos: ammonium etchant, "Replenisher" solution, and "Cuposit." The Replenisher and Cuposit are tradenames. The ammonium etchant is analyzed for pH, copper, and lead. The Replenisher is analyzed for pH and lead. The Cuposit is analyzed for pH and mercury. Annually, these wastestreams are all reevaluated for pH, TCLP metals, nickel, and thallium. This allows confirmation of the presence of LDR substances and that the waste has not changed in composition. Sampling is performed with a coliwasa or equivalent sampler. Test methods used are listed in Table A-3.

If a nonroutine wastestream becomes a routine waste or a new wastestream is identified, it will follow the pattern established in the above paragraphs. Routine testing parameters will be established and reverified on an annual basis.

2.4 Oxidizer Waste

Oxidizer waste is split into two processing categories: acid waste and uncomposited labpack waste. Acid oxidizer waste is handled per Section 2.2.

Oxidizer labpack waste is not composited due to the high fire risk of doing so. They are packaged in overpack containers with absorbent. The entire container is then incinerated. The Laboratory's incinerator cannot generally receive such a package; therefore, most of this waste is and will be shipped offsite. The packing list of bottles and cans in the overpack container serves as the analytical record. This listing is sufficient to allow the identification of any and all LDR waste.

2.5 Reactive Wastes

Reactive waste has only two processing categories: uncomposited labpack waste and routine process waste. (Explosive waste is treated as a separate category of waste and discussed in Section 2.7). The following discussions treat each as a unique analysis entry.

2.5.1 Uncomposited Labpack Waste

Reactive labpack wastes are not composited due to the high fire and explosion risk of doing so. They are packaged in overpack containers with absorbent. The entire container is then incinerated. The Laboratory's incinerator cannot generally receive such a package; therefore, most of this waste is and will be shipped offsite. The packing list of bottles and cans in the overpack container serves as the analytical record. This listing is sufficient to allow the identification of any and all LDR waste.

2.5.2 Process Waste

The only ongoing operation at the Laboratory that generates a reactive process waste is the machining operations. Periodically, the machinists are required to work with lithium hydride and to a lesser degree lithium metal. This results in drums of lithium hydride dust and lithium chips, respectively. Process knowledge and the isolation of these operations when they do occur serves as the analytical record for this wastestream.

If large quantities of reactive waste should be produced elsewhere in the Laboratory, documented process knowledge would also be used as the analytical record.

2.6 Inorganic Wastes

Inorganic waste is split into two processing categories: uncomposited labpack waste and process waste. The following discussions treat each as a unique analysis entity.

2.6.1 Uncomposited Labpack Waste

These wastes are generally solid material and therefore do not lend themselves to compositing. They will be packaged in overpack containers with absorbent. The entire container is then usually destined for offsite land disposal. The packing list of bottles and cans in the overpack container serves as the analytical record. This listing is sufficient to allow the identification of any and all LDR waste.

2.6.2 Process Waste

Four categories of inorganic process waste exist: liquid waste, primary metal waste, nonroutine solid waste, and routine solid waste. Inorganic liquid waste is generally acidic or basic and is thus treated under the scenarios described in Sections 2.2 and 2.3.

Process knowledge is considered adequate for the further treatment/disposal/recycle of wastestreams such as lead and mercury. In both cases the metal is available as a hazardous waste but that knowledge alone suffices to allow for proper storage, treatment, and disposal.

Nonroutine solid waste is periodically generated throughout the Laboratory. This waste will be analyzed for TCLP metals, nickel, and thallium. This allows confirmation of the presence of inorganic LDR material. The absence of organic LDR will be established by either documented KOP or analyses. The test methods employed are listed in Table A-3. Sampling is performed using a core sampler if possible or a grab sampler if it is not possible to penetrate the waste with a core sampler. Because this is defined as a nonroutine wastestream, every unique drum or batch will be sampled.

There is one routinely generated inorganic solid waste at the Laboratory. It is the barium contaminated sand from the explosives burning operation. Barium is the only established parameter of concern for treatment and therefore is the only parameter routinely analyzed for. Annually, a sample will be analyzed for the other listed metals. Sampling is conducted with a core sampler. Test methods are listed in Table A-3.

If a nonroutine wastestream becomes a routine waste or a new wastestream is identified, it will follow the pattern established in the above paragraph. Routine testing parameters will be established and reverified on an annual basis.

2.7 Explosives Waste

Due to the limited number of areas producing explosives waste and the safety problems associated with analyzing explosives waste, process knowledge of the waste sent for treatment by open burning or open detonation is the waste analysis record. Table A-4 lists the various explosives used at the Laboratory. Open burning/open

detonation is conducted under interim status per HWMR-5 Part VI, Section 265.382.

2.8 Contaminated Solid Waste

The waste covered by this category is generally classified as debris. Contaminated soil would be addressed under the respective chemical category as outlined in the above sections. The contaminant of concern is known for all waste in this category but the substrate can not be readily analyzed. Therefore, until the item in question is cleaned it is treated as a hazardous waste. The types of waste covered by this provision would be tanks and rags.

2.9 Waste Treatment Residuals

Waste treatment residuals are the liquid and solid wastestreams resulting from the treatment of a hazardous waste, such as: the treated liquid and precipitate from chemical treatment operations at either TA-50 or TA-54 and the scrubber water and ash from the incinerator. Barium contaminated sand is also a treatment residue but because it receives further chemical treatment it is discussed in Section 2.6.2.

The liquid from chemical treatment operations is tested to insure that (a) treatment is complete and (b) remaining chemical concentrations are within the discharge guidelines established under the NPDES permit for the TA-50 radioactive treatment system. Sections 2.2 and 2.3 discussed the procedure used to establish those parameters that would be tested for at the conclusion of the treatment. If documented KOP can not exclude the presence of F-listed solvents, then each batch of treatment supernate will be tested for the compounds listed in 261.3(a).2.iv.A and B. Samples from the Batch Waste Treatment Unit are taken from a sampling loop. Samples from the treatment tanks at TA-54 will be taken by either coliwasa (or equivalent) or grab sample. Test methods used are provided in Table A-3. The scrubber water from the incinerator will always be within the discharge guidelines established under the NPDES permit for the TA-50 radioactive treatment system thereby negating chemical analysis. The scrubber will be analyzed annually to verify this.

Solids from the chemical treatment operations and the ash from the incinerator are tested for the TCLP metals that were established before treatment to be present. As necessary, these wastes are then cemented or otherwise solidified. The solidified matrix may again be sampled by removing a sample from the mixture before curing. After curing, it is tested for the same TCLP metals. Assuming there is no listed materials present, this would allow a determination to be made as to whether the waste remained a hazardous waste or not. This procedure would be followed for each batch of solids requiring processing.

2.10 Unknown Material

Occasionally, chemicals of an unknown nature require disposal. These wastes are handled on a case-by-case basis. The individual waste may be tentatively characterized by knowledge of the operations and activities that were performed in the specific area in which the waste was generated. This information is used to restrict the choices of initial waste analysis to a small population of chemicals.

For purposes of managing unknown wastes a small volume is defined at LANL as less than one liquid gallon (or approximately four liters). The rationale for the small volume designation is that this is the minimum quantity of sample which is needed to test if the waste is hazardous. At and below this limit the sample is actually consumed in the analytical procedure. Small volumes of unknown wastes are analyzed for pH, flashpoint, and reactivity. This allows the material to be categorized for further handling.

Volumes greater than one gallon or four liters of a single unknown waste require a more detailed analytical scheme. These wastes are tested for hazardous waste characteristics and any other analyses indicated by the initial data gathered on the material. Sufficient detail must be reported to allow the assignment of the proper EPA Hazardous Waste Number to the waste. All test methods used are outlined in Table A-3.

Los Alamos
Los Alamos National Laboratory
Los Alamos, New Mexico 87545

CHEMICAL WASTE DISPOSAL REQUEST
RETURN FORM TO WASTE MANAGEMENT, MS J583
Telephone Number 667-7579

Requested By (Name A)	Telephone Number	Group		Date Sent		Date Tracking Number
Waste Generator (Name B)	Telephone Number	Tech Area	Building	Area/Wing	Room	Date Picked Up/Initials

Line Number	Number of Containers	Volume of Each Container	CHEMICAL NAME[1]	HAZARD[2]
1				
2				
3				
4				
5				
6				
7				
8				
9				
10				
11				
12				
13				
14				

I hereby certify that the information supplied above is correct.

Generator Signature	Date

[1] CHEMICAL NAME - Name of single compound, names of all compounds in mixture, trade-name and/or number of commercial product. For trade-name products, attach the manufacturer's MSDS.

[2] For HAZARD insert the appropriate letter: C - corrosive, I - ignitable, R - radioactive, T - toxic, X - reactive, S - solid, L - liquid, G - gas.

(IS) Form Number 10 34 Part A (4/88)

Figure A-1-Chemical Waste Disposal Request Form

Requested By (Name A)	Telephone Number	Group		Date Sent		Data Tracking Number
Waste Generator (Name B)	Telephone Number	Tech Area	Building	Area/Wing	Room	

Line Number	RSN	Code	DOT Proper Shipping Name	DOT Hazard Class	UN/NA No.	HSS-7 Code	EPA Codes	Handling Code	Weight	Form Number
1										
2										
3										
4										
5										
6										
7										
8										
9										
10										
11										
12										
13										
14										

I hereby certify that the information supplied above is correct according to the applicable regulations.

Reviewer Signature	Date

HS Form Number HS 3A Part B (4/89)

Figure A-1 (cont.)

REACTIVITY GROUP NUMBER	REACTIVITY GROUP NAME	1	2	3	4	5	6	7	8	9	10	11	12	13
1	Acids, Mineral, Non-oxidizing													
2	Acids, Mineral, Oxidizing		2											
3	Acids, Organic		$^{G}_{H}$	3										
4	Alcohols and Glycols	H	$^{H}_{F}$	$^{H}_{P}$	4									
5	Aldehydes	$^{H}_{P}$	$^{H}_{F}$	$^{H}_{P}$		5								
6	Amides	H	$^{H}_{GT}$				6							
7	Amines, Aliphatic and Aromatic	H	$^{H}_{GT}$	H		H		7						
8	Azo Compounds, Diazo Compounds and Hydrazines	$^{H}_{G}$	$^{H}_{GT}$	$^{H}_{G}$	$^{H}_{G}$	H			8					
9	Carbamates	$^{H}_{G}$	$^{H}_{GT}$						$^{G}_{H}$	9				
10	Caustics	H	H	H		H				$^{H}_{G}$	10			
11	Cyanides	$^{GT}_{GF}$	$^{GT}_{GF}$	$^{GT}_{GF}$					G			11		
12	Dithiocarbamates	$^{H}_{GF_F}$	$^{H}_{GF_F}$	$^{H}_{GF_{GT}}$		$^{GF}_{GT}$		L	$^{H}_{G}$				12	
13	Esters	H	$^{H}_{F}$						$^{H}_{G}$		H			13
14	Ethers	H	$^{H}_{F}$											
15	Fluorides, Inorganic	GT	GT	GT										
16	Hydrocarbons, Aromatic		$^{H}_{F}$											
17	Halogenated Organics	$^{H}_{GT}$	$^{H}_{F_{GT}}$					$^{H}_{GT}$	$^{H}_{G}$		$^{H}_{GF}$	H		
18	Isocyanates	$^{H}_{G}$	$^{H}_{F_{GT}}$	$^{H}_{G}$	$^{H}_{P}$			$^{H}_{P}$	$^{H}_{G}$		$^{H}_{P_G}$	$^{H}_{G}$	L	
19	Ketones	H	$^{H}_{F}$						$^{H}_{G}$		H	H		
20	Mercaptans and Other Organic Sulfides	$^{GT}_{GF}$	$^{H}_{F_{GT}}$						$^{H}_{G}$					
21	Metals, Alkali and Alkaline Earth, Elemental	$^{GF}_{H_F}$	$^{GF}_{H_F}$	$^{GF}_{H_F}$	$^{GF}_{H_F}$	$^{GF}_{H_F}$	$^{GF}_{H}$	$^{GF}_{H}$	$^{GF}_{H}$	$^{GF}_{H}$	$^{GF}_{H}$	$^{GF}_{H}$	$^{GF}_{GT_H}$	$^{GF}_{H}$
22	Metals, Other Elemental & Alloys as Powders, Vapors, or Sponges	$^{GF}_{H_F}$	$^{GF}_{H_F}$	GF					$^{H}_{F_{GT}}$	L	$^{GF}_{H}$			
23	Metals, Other Elemental & Alloys as Sheets, Rods, Drops, Moldings, etc	$^{GF}_{H_F}$	$^{GF}_{H_F}$						$^{H}_{F_G}$					
24	Metals and Metal Compounds, Toxic	S	S	S			S	S			S			
25	Nitrides	$^{GF}_{HF}$	$^{H}_{F_E}$	$^{H}_{GF}$	$^{GF}_{H_E}$	$^{GF}_{H}$			U	$^{H}_{G}$	U	$^{GF}_{H}$	$^{GF}_{H}$	$^{GF}_{H}$
26	Nitrites	$^{H}_{GT_{GF}}$	$^{H}_{F_{GT}}$	H							U			
27	Nitro Compounds, Organic		$^{H}_{F_{GT}}$			H					$^{H}_{E}$			
28	Hydrocarbons, Aliphatic, Unsaturated	H	$^{H}_{F}$			H								
29	Hydrocarbons, Aliphatic, Saturated		$^{H}_{F}$											
30	Peroxides and Hydroperoxides, Organic	$^{H}_{G}$	$^{H}_{E}$		$^{H}_{F}$	$^{H}_{G}$		$^{H}_{GT}$	$^{H}_{F_E}$	$^{H}_{F_{GT}}$		$^{H}_{E_{GT}}$	$^{H}_{F_{GT}}$	
31	Phenols and Cresols	H	$^{H}_{F}$						$^{H}_{G}$					
32	Organophosphates, Phosphorothioates, Phosphorodithioates	$^{H}_{GT}$	$^{H}_{GT}$						U		$^{H}_{E}$			
33	Sulfides, Inorganic	$^{GT}_{GF}$	$^{HF}_{GT}$	GT		H			E					
34	Epoxides	$^{H}_{P}$	$^{H}_{P}$	$^{H}_{P}$	$^{H}_{P}$	U		$^{H}_{P}$	$^{H}_{P}$		$^{H}_{P}$	$^{H}_{P}$	U	
101	Combustible and Flammable Materials, Miscellaneous	$^{H}_{G}$	$^{H}_{F_{GT}}$											
102	Explosives	$^{H}_{E}$	$^{H}_{E}$	$^{H}_{E}$					$^{H}_{E}$		$^{H}_{E}$			$^{H}_{E}$
103	Polymerizable Compounds	$^{P}_{H}$	$^{P}_{H}$	$^{P}_{H}$					$^{P}_{H}$		$^{P}_{H}$	$^{P}_{H}$	U	
104	Oxidizing Agents, Strong	$^{H}_{GT}$		$^{H}_{GT}$	$^{H}_{F}$	$^{H}_{F}$	$^{H}_{F_{GT}}$	$^{H}_{F_{GT}}$	$^{H}_{E}$	$^{H}_{F_{GT}}$		$^{H}_{E_{GT}}$	$^{H}_{F_{GT}}$	$^{H}_{F}$
105	Reducing Agents, Strong	$^{H}_{GF}$	$^{H}_{F_{GT}}$	$^{H}_{GF}$	$^{H}_{GF_F}$	$^{GF}_{H_F}$	$^{GF}_{H}$	$^{H}_{GF}$	$^{H}_{G}$				$^{H}_{GT}$	$^{H}_{F}$
106	Water and Mixtures Containing Water	H	H						G					
107	Water Reactive Substances	← EXTREMELY REACTIVE												

FIGURE A-2: HAZARDOUS WASTE COMPATIBILITY CHART

Reactivity Code	Consequences
H	Heat generation
F	Fire
G	Immediate and non-flammable gas generation
GT	Toxic gas generation
GF	Flammable gas generation
E	Explosion
P	Violent polymerization
S	Solubilization of toxic substances
U	May be hazardous but unknown

Example

$H_{F_{GT}}$ — Heat generation, fire, and toxic gas generation

	14	15	16	17	18	19	20	21	22	23	24	25	26	27	28	29	30	31	32	33	34	101	102	103	104	105	106	107
14																												
15																												
16																												
17																												
18																												
19																												
20				H	H	H																						
21				H_E	GF_H	GF_H	GF_H																					
22				H_E	GF_H		H_{GF_F}																					
23				H_F																								
24																												
25				GF_H	U	GF_H	GF_H	E																				
26								H_P			S	GF_H																
27								H_{GF_E}				H_{GF_E}																
28									H_E																			
29																												
30				H_E	H	E	$H_{F_{GT}}$	H_E	P		H_G	H_{GF_E}	$H_{P_{GT}}$		H_P													
31					H_P			GF_H				GF_H					H											
32								H									U											
33					H												H_{GT}											
34							H_P	H_P	H_P		H_P	H_P					H_P	H_P	U	H_P								
101								H_{G_F}				H_{GF_F}					$H_{F_{GT}}$											
102								H_E	H_E	H_E	E	E					H_E	H_E		H_E	H_E	H_E						
103								P_H	P_H	P_H	P_H	P_H					P_H	P_H		P_H			H_E					
104	H_F		H_F	H_{GT}	$H_{P_{GT}}$	H_F	$H_{F_{GT}}$	H_{F_E}	H_{F_E}	H_F		H_{F_E}	$H_{F_{GT}}$	H_E	H_P	H_F	H_G	H_F	$H_{F_{GT}}$	$H_{F_{GT}}$	H_{F_G}	H_{F_G}	H_E	$H_{F_{GT}}$					
105				H_E	GF_H	GF_H	GF_H						H_{GF}	H_E			H_E	GF_H	GT_{GF_H}		H	GF_H	H_E	$H_{P_{GF}}$	H_{F_E}			
106					H_G			GF_H	GF_H		S	GF_H								GT_{GF}						GF_{GT}		
107	DO NOT MIX WITH ANY CHEMICAL OR WASTE MATERIAL!																EXTREMELY REACTIVE! →											

FIGURE A-2 (CONT.)

TABLE A-1
WASTESTREAMS, ANALYTICAL PARAMETERS, AND RATIONALE

Wastestream	Analytical Parameters	Rationale (Section Reference)
Organic Waste		
- Uncomposited labpack	Packing list	2.1.1
- Drummed	pH, TCLP metals, TOX, TOC, ash content, viscosity, heat value, sulfur, chemical composition	2.1.2
- Composited labpacks and drums	List of chemicals, pH, flashpoint, ash content, viscosity, heat value, TOX, TOC	2.1.3 2.1.4
Corrosive Acid		
- Labpack	pH, as necessary	2.2.1
- Nonroutine nonmetallic process waste	pH, TCLP metals, nickel, thallium	2.2.2
- Nonroutine metallic process waste	pH, TCLP metals, nickel, thallium	2.2.2
- Routine nonmetallic process waste	pH	2.2.2
- Ferric chloride	pH, chromium, silver, lead, copper	2.2.2
- Ammonium persulfate	pH, lead, mercury	2.2.2
Corrosive Base		
- Labpack	pH, as necessary	2.3.1
- Nonroutine nonmetallic process waste	pH, TCLP metals, nickel, thallium	2.3.2

TABLE A-1 (CONT)
WASTESTREAMS, ANALYTICAL PARAMETERS, AND RATIONALE

Wastestream	Analytical Parameters	Rationale (Section Reference)
- Nonroutine metallic process waste	pH, TCLP metals, nickel, thallium	2.3.2
- Ammonium etchant	pH, copper, lead	2.3.2
- "Replenisher"	pH, lead	2.3.2
- "Cuposit"	pH, mercury	2.3.2
Oxidizer		
- Labpacks	Packing list	2.4
Reactive		
- Labpacks	Packing list	2.5.1
- Process waste	Knowledge of process	2.5.2
Inorganic		
- Labpack	Packing list	2.6.1
- Primary metals	Knowledge of process	2.6.2
- Nonroutine solid	TCLP metals, nickel, thallium	2.6.2
- Barium sand	Barium	2.6.2
Explosives	Knowledge of process	2.7
Contaminated Debris	Knowledge of process	2.7
Waste Treatment Residues		

TABLE A-1 (CONT)
WASTESTREAMS, ANALYTICAL PARAMETERS, AND RATIONALE

Wastestream	Analytical Parameters	Rationale (Section Reference)
- Chemical treatment liquids/solids	Previously established parameters	2.9
- Incinerator ash	Previously established parameters	2.9
- Incinerator scrubber water	Knowledge of process	2.9
Unknowns		
- Small volume (<1 gal.)	pH, flashpoint, reactivity	2.10
- Large volume	All parameters necessary to identify waste completely	2.10

TABLE A-2
PACKAGING SEGREGATION SCHEME

STORAGE CATEGORY	PACKAGING CATEGORY	RNG
Organics (1)	A	4, 5, 9, 13, 14, 16, 17, 19, 26, 29, 31, 32, 101
	B	6, 7, 8, 27, 28
	C	12, 20
	D	34, 18
Oxidizers (2)	A	2
	B	104
	C	30
Acids (3)	N/A	1, 3
Bases (4)	N/A	10, 11, 33, 105
Reactives (5)	N/A	21, 22, 25, 102, 107 - ALL STORED INDIVIDUALLY - NO COMBINING ALLOWED
Nonreactive Metals (6)	N/A	11, 15, 23, 24, 33 - 11 and 33 would only be allowed in labpack, solid quantities
Others		The following must be evaluated on a case-by-case basis to determine which of the above categories is appropriate: 25, 102, 103.

TABLE A-3
WASTE ANALYSIS PARAMETERS AND TEST METHODS

Parameter	Test Method	Reference[1]
Ignitability	Pensky-Martens Closed-Cup Method	(L) SW1010 (L) ASTM D93-80
Reactivity	Numerous methods and tests[2]	(L,S) SW Section 2.1.3
pH	Electrometric	(L) SW9040
TCLP	TCLP Extraction[3] and Graphite Furnace AA Spectroscopy	(L,S) SW1310
Arsenic		(L) SW7060
Barium		(L) SW7081, SW7080
Cadmium		(L) SW7131, SW7130
Chromium		(L) SW7191, SW7190
Lead		(L) SW7421, SW7420
Selenium		(L) SW7740
Silver		(L) SW7761, SW7760
Mercury	TCLP Extraction[3] and Manual Cold Vapor Technique	(L,S) SW1310
Organochlorine Pesticides	TCLP Extraction[3] and Gas Chromatography	(L) SW8080
Chlorinated Herbicides		(L) SW8150
Toxicity Characteristic Leaching Procedure (TCLP)		(L,S) 40 CFR Part 268, Appendix I
Chemical Composition	95% organic composition by GC/FID	(L) SW8100

TABLE A-3 (CONT)
WASTE ANALYSIS PARAMETERS AND TEST METHODS

Parameter	Test Method	Reference[1]
Trace Organic Analysis	Any of the following:	
	Volatile organic compounds-GC/MS	(L) SW8240
	Semi-volatile organic compounds-GC/MS	(L) SW8250
	-Packed column	(L) SW8270
	-Capillary column	
Heat Value	Bomb calorimeter	(L) A006, ASTM D240
Organic Chlorine	Halide titration of combustion residue	(L,S) A004, ASTM D2361
Ash Content	Residue after combustion in muffle furnace	(L) A001, ASTM D482 (L) A001, ASTM D3174
Cyanide-Free and Total	Distillation and colorimetric (UV)	(L) SW9012
Chrome	Colorimetric method for hexavalent chromium	(L) SW7196
Sulfide	Colorimetric titration	(L) SW9030

TABLE A-3 (CONT)
WASTE ANALYSIS PARAMETERS AND TEST METHODS

Parameter	Test Method	Reference[1]
Total Metals	Digestion and inductively coupled plasma method	SW3020
Arsenic		(L) SW6010
Barium		(L) SW6010
Beryllium		(L) SW6010
Cadmium		(L) SW6010
Chromium		(L) SW6010
Lead		(L) SW6010
Nickel		(L) SW6010
Selenium		(L) SW6010
Silver		(L) SW6010
Thallium		(L) SW6010
Zinc		(L) SW6010
Mercury	Manual cold vapor technique (S) SW7471	(L) SW7470
Free Liquids	Paint filter liquids test	(S) SW9095

(1) "A" refers to Sampling and Analysis Methods for Hazardous Waste Combustion, EPA-600/8-84-002, February 1984.
"ASTM" refers to American Society for Testing Material Standards.
"SW" refers to Test Methods for Evaluating Solid Waste, Physical/Chemical Methods, 3rd Edition, EPA, November 1986.
"L" refers to liquid waste.
"S" refers to solid waste.

(2) Methods for cyanide and sulfide gas generation are pending. SW-846 methods will be used when they become available. Methods recommended by EPA will be used in interim.

(3) If TCLP and other analyses do not permit identification of an unknown chemical waste, digested metal samples (per SW3020) will be analyzed for the metals noted.

TABLE A-4

ESTABLISHED EXPLOSIVES AT TA-16
NOMINAL COMPOSITIONS

NAME OR CODE	COMPOSITION
A1 ANFO[a]	Ammonium nitrate/fuel oil/aluminum power
AN	Ammonium nitrate
ANFO	Ammonium nitrate/fuel oil
Baratol	76 wt% Barium nitrate/24 wt% TNT
BDNPA	Bis(dinitropropyl) acetal
BDNPF	Bis(dinitropropyl) formal
Black powder	74 wt% Potassium nitrate/15.6 wt% charcoal/10.4 wt% sulfur
Boracitol	60 wt% Boric acid/40 wt% TNT
BTX	5,7-Dinitro-1-picrylbenzotriazole
Composition A-3	91 wt% RDX/9 wt% beeswax
Composition A-4	97 wt% RDX/3 wt% beeswax
Composition A-5	98.5 wt% RDX/1.5 wt% beeswax
Composition B and B-3	60 wt% RDX/40 wt% TNT
Composition C-3	88 wt% RDX/12 wt% wax
Composition C-4	91 wt% RDX/2.1 wt% polyisobutylene/1.6 wt% motor oil/5.3 wt% de(2-ethylhexyl) sebacate
Cyclotol, 75/25	75 wt% RDX/25 wt% TNT
Cyclotol, 70/30	70 wt% RDX/30 wt% TNT
DATB	Diaminotrinitrobenzene
DBA-1[a]	AN/$NaNO_3$/TNT/H_2O/thickener
Detasheet C	63 wt% PETN/8 wt% NC/29 wt% elastomeric binder
Detasheet D	75 wt% PETN/25 wt% elastomeric binder
	NOTE: Although this material may be red in color, it is an explosive and not an inert material.
DINGU	Dinitroglycoluril
DNPA	2,2-Dinitropropyl acrylate polymer
DNT	Dinitrotoluene
EDC-8[b]	76 wt% PETN/24 wt% Silicone rubber, MS 2420
EDC-28[c]	94 wt% RDX/6 wt% FPC 461
EDC-32[d]	85 wt% HMX/15 wt% Viton A
EDC-37[e]	91 wt% HMX/1 wt% nitrocellulose/8 wt% K-10 liquid
*EDC-38[f]	94.5 wt% HMX/3.5 wt% K-10 Liquid/2 wt% Polyurethane
HBX-1	40 wt% RDX/38 wt% TNT/17 wt% Al/5 wt% Wax/0.5 wt% $CaCl_2$

TABLE A-4

ESTABLISHED EXPLOSIVES AT TA-16
NOMINAL COMPOSITIONS
(CONTINUED)

NAME OR CODE	COMPOSITION
High Energy Propellants[g]	Solid propellants generally used in missile systems
HMX	Cyclotetramethylenetetranitramine
HNS	Hexanitrostilbene
K-10[h]	65.3 wt% dinitroethylbenzene/34.7 wt% trinitroethylbenzene
LX-04	85 wt% HMX/15 wt% Viton A
LX-07	90 wt% HMX/10 wt% Viton A
LX-14	95.5 wt% HMX/4.5 wt% Estane 5702 F-1
Methane/oxygen[h]	Explosive mixtures of methane and oxygen gases
NC	Nitrocellulose, cellulose nitrate
Nitromethane	Nitromethane
NQ	Nitroguanidine
NTO	1,2,4-nitro-triazole-5-one
Octol	75 wt% HMX/25 wt% TNT
PBX-9001	90 wt% RDX/8.5 wt% polystyrene/1.5 wt% dioctyl phthalate
PBX-9007	90 wt% RDX/9.1 wt% polystyrene/0.5 wt% dioctyl phthalate/0.4 wt% resin
PBX-9010	90 wt% RDX/10 wt% Kel-F 3700 elastomer
PBX-9011	90 wt% HMX/10 wt% Estane 5703 F-1
PBX-9205	92 wt% RDX/6 wt% polystyrene/2 wt% dioctyl phthalate
PBX-9206	92 wt% HMX/8 wt% Kel-F 3700 elastomer
PBX-9401	94.2 wt% RDX/3.6 wt% polystyrene/2.2 wt% trioctyl phosphate
PBX-9404	94 wt% HMX/3 wt% nitrocellulose/3 wt% chloroethyl phosphate
PBX-9405	94 wt% RDX/3 wt% nitrocellulose/3 wt% chloroethyl phosphate
PBX-9407	94 wt% RDX/6 wt% Exon 461
PBX-9501	95 wt% HMX/2.5 wt% Estane/2.5 wt% BDNPA/F
PBX-9502	95 wt% TATB/5 wt% Kel-F 800
PBX-9503	80 wt% TATB Class 2)/15 wt% HMX (Class 2)/5 wt% Kel-F 800
PBXW-113	88 wt% HMX/12 wt% rubber/plasticizer binder
Pentolite	50 wt% PETN/50 wt% TNT

TABLE A-4

ESTABLISHED EXPLOSIVES AT TA-16
NOMINAL COMPOSITIONS
(CONTINUED)

NAME OR CODE	COMPOSITION
PETN	Pentaerythritol tetranitrate
Picric Acid	Du Pont 85 wt% pure
PYX	2,6-Bis(picrylamino)-3,5-dinitropyridine
RDX	Cyclonite, cyclotrimethylenetrinitramine
Smokeless Powder (Single Base)	Standard military grades. Single or multi-perforated grains of colloided nitrocellulose. Stabilizers, plasticizers, inorganic nitrates, and other modifying agents may also be present.
Smokeless Powder (Double Base)	Standard military grades. Single or multi-perforated grains of colloided nitrocellulose containing nitroglycerine or nitroglycol. Stabilizers, plasticizers, inorganic nitrates, and other modifying agents may also be present.
STRATABLAST C[a]	Slurry blasting explosive
TAGN[h]	Triaminoguanidine nitrate
TAL-1005E[a]	Slurry blasting explosive
TATB	Triaminotrinitrobenzene
Tetryl	2,4,6-Trinitrophenylmethylnitramine
TNS	Trinitrostilbene
TNT	Trinitrotoluene
TNT/NC	80 wt% TNT/20 wt% NC
Tritonal	80 wt% TNT/20 wt% aluminum powder
XTX-8003	80 wt% Recrystallized PETN/20 wt% Sylgard 182
XTX-8004	80 wt% RDX/20 wt% Sylgard 182

---

[a]For transportation only to and from M- and WX-Division Groups and storage by group WX-3.
[b]EDC-8 is the United Kingdom's version of XTX-8003.
[c]EDC-28 is the United Kingdom's version of PBX-9407.
[d]EDC-32 is the United Kingdom's version of LX-04.
[e]For shipping, storage, and experimental evaluation of quantities less than 5 g and for assembly of finished charges into test devices only.
[f]For shipping, storage, and analytical evaluation of molding powder and assembly of finished pieces into test devices.
[g]After approval by the Explosives Development Committee.
[h]For shipping, storage, and experimental evaluations on less than 5-g quantities.

ATTACHMENT 3

DIAGNOSTIC EQUIPMENT

Los Alamos National Laboratory

RD&D Permit

DIAGNOSTIC EQUIPMENT

Los Alamos National Laboratory
RD&D PERMIT

Techniques used to observe gas effluent from the PBR/SDP treatment unit include mass spectrometry (MS), gas chromatography (GC), infrared absorption spectroscopy (IR), and ultraviolet (UV) absorption spectroscopy.

Mass Spectrometry (MS)

When a gas sample (at ambient pressure) is fed to the MS, it flows through a differentially pumped pair of orifice plates, such that the pressure in the ion source of the MS is about 10^{-3} torr. The MS is a UTI 100C quadrupole filter, with a closed ion source. The instrument is computer-controlled via a Spectralink interface.

Mass spectrometry presents many difficulties in the identification and quantification of species. For a moderate resolution system, the dynamic range of the electron multiplier is such that most species cannot be observed at levels below 10 - 1200 ppm, even when the ion in question is virtually absent in the background. Then there is the problem of fragmentation, in which several parent molecules may give rise to the same ion, and interference, in which two species may give rise to ions of the same mass. For example, CO cannot be detected in the presence of excess N_2 since both give mainly ions of m/e=28. Given these limitations, MS so far has not been able to quantify the species produced in the PBR and SDP, except for the major species such as O_2, CO_2, and H_2O, which may be more easily observed by other techniques. Thus, the MS technique is shown to provide evidence for the most abundant reaction products, which can then be quantified by other techniques.

The MS instrument will only be operated intermittently during the RD&D experiments.

Gas Chromatography (GC)

The GC instrument is a Perkin-Elmer Sigma 2000, equipped with both a flame ionization detector (FID) and an electron capture detector (ECD). The flow from the column is split so that both detectors may be used simultaneously. The virtue of this arrangement is that the detectors have very specific sensitivities; the FID primarily detects hydrocarbons, while the

ECD detects mainly chlorine-containing and other electronegative species.

The GC column used is a VOCOL (Supelco) wide bore capillary column (60 meters long, 0.75 millimeters inner diameter, 1.5 μm film thickness). The wide bore allows large sample sizes (500 μl) while maintaining the capillary column advantage of good separations with short retention times. The VOCOL column is the one used in EPA method 601, used for analyzing "purgeable halocarbons", which include all of the chlorocarbons likely to be produced in the PBR destruction of chlorinated organics. Using temperature programming, it will also be possible with the VOCOL column to analyze for unburned hydrocarbon species, although the peaks are not always well resolved for the smallest molecules. Thus, the column is kept at low temperature for a few minutes, during which C_1, C_2, C_3, etc., hydrocarbons elute, then the column is heated up to drive off the larger hydrocarbons and less volatile and/or more polar halocarbons (carbon tetrachloride, TCE, PCE, etc.).

The GC instrument will be operated continuously during the RD&D experiments.

Infrared (IR) Absorption Spectroscopy

A Beckman Acculab IR spectrometer and BIORAD FTIR spectrometer may also be used for monitoring of gaseous effluents from the PBR and SDP. The gas flow through the absorption cell is in series with the sampling loop on the gas chromatograph. The short path cell of the Beckman Acculab IR spectrometer and the low resolution of the instrument limit its use to measurements of major constituents only, such as carbon dioxide, carbon monoxide, and water. The FTIR, however, has a long path absorption cell and has shown the potential to identify species that are unable to be resolved by GC. Quantitative analysis is more difficult, however, since the absorbance often is not a linear function of species concentration.

The FTIR Spectrometer will be operated continuously during the RD&D experiments.

Ultraviolet (UV) Absorption Spectroscopy

A simple UV spectrometer was constructed to measure the absorbance of the PBR effluent in the 300-350 nm region. The purpose is to look for molecular chlorine (Cl_2), which has a strong, broad absorption band peaking at about 330 nm. None of the major reaction products (CO_2, CO, H_2O, hydrocarbons) absorb light in this region, so the system should be specific and

sensitive to chlorine. The system consists of a deuterium lamp to provide continuum uv light, a 1-meter long absorption cell, a collection lens, and a 1/8 meter Oriel monochromator equipped with a PIN photodiode detector. The spectral slit width of the monochromator is estimated to be about 5 nm. The monochromator may be scanned from 300-350 nm while the detector output may recorded on a strip chart recorder.

The UV absorption cell will only be operated intermittently during the RD&D experiments.

ATTACHMENT 4

STANDARD OPERATING PROCEDURES (SOP)

Los Alamos National Laboratory

RD&D PERMIT

LOS ALAMOS

Los Alamos National Laboratory
Los Alamos, New Mexico 87545

SOP SUBMITTAL

TO: HEALTH, SAFETY, AND ENVIRONMENT DIVISION SOP OFFICE (MS K489)

SOP Author Name	Organization	Mail Stop	Telephone Number	Date Submitted
Paul J. Wantuck	CLS-2	J565	7-5249	3/31/92

SOP Title: Packed Bed Reactor/Silent Discharge Plasma System

Location of Operation: TA-35, Bldg. 128, low bay

SOP Status: ☐ New ☐ Revised ☒ Other (Specify) Compilation of existing/approved SOP and SWP

Return comments to: Name of Individual	Organization	Mail Stop	Telephone Number
Paul Wantuck	CLS-2	J565	7-5249

HAZARDS INVOLVED (Check all applicable)

- ☐ Explosives
- ☐ Confined Spaces and/or Spaces with Limited Egress
- ☐ Ionizing Radiation
- ☒ Fire
- ☐ Laser Light
- ☒ High Electric Potential and/or Current
- ☒ Toxic Materials or Biological Agents
- ☐ Liquid Hydrogen
- ☒ Other (Specify) Thermal burns, typical combusion gases (CO_2, CO) and HCl

Explanation/Comments

ORIGINATING OFFICE APPROVALS. *This SOP must be approved in accordance with established division procedures before it is submitted to the Health, Safety, and Environment Division SOP Office. Division leader approval is needed only if required by the originating division's SOP procedures.*

Group Leader Signature	Date	Division Leader Signature	Date
[signature]	4/2/92	Allen Hartford	4/3/92

FOR HEALTH, SAFETY, AND ENVIRONMENT DIVISION USE ONLY

Review Groups

Hazard Types

HS Form Number 1-3A (6/84)

CLS-2:92-123
Created: 3/16/92

STANDARD OPERATING PROCEDURE

Title: Packed Bed Reactor/Silent Discharge Plasma System

Location: TA-35, Building 128

Group: CLS-2

Reviewed by:

Paul Wantuck, Originator

Carl Wilson, CLS-2 Safety Officer

Approved by:

Wayne C. Danen, Group Leader

Chemical and Laser Sciences Division Office:

Reviewed by:

C. Blackwell
Division Safety Officer

A. Hartford, Jr., Division Leader

HS Division Signature

SOP REVIEW SHEET

SOP Title:

Group:

Author:

Review Dates:	Reviewed By:	Status: (revised or no change)

PROJECT PERSONNEL SIGNATURES

I have read the attached SOP and will comply with the stated ES&H requirements.

Name	Date

AREA OCCUPANT SIGNATURES

I have read the attached SOP and recognize associated hazards in this area.

Name	Group	Date

STANDARD OPERATING PROCEDURE
Packed Bed Reactor/Silent Discharge Plasma System
Paul J. Wantuck, CLS-2
TA-35, Bldg. 128

I. SUMMARY DESCRIPTION OF ACTIVITIES

This document describes the procedures for safely operating the Packed Bed Reactor (PBR)/ Silent Discharge Plasma (SDP) system. This two-stage, thermal/plasma prototype represents an alternative-to-incineration apparatus which will be used for the destruction of machining oils and cutting fluids (namely Trimsol and Regal) as well as gaseous mixtures containing some fraction of chlorinated solvents (trichloroethylene, tricholoroethane). As the overall destruction efficiency of this technology has been shown to be very high, the resulting effluent will be composed almost exclusively of CO_2, H_2O and simple acids such as HCl. Sensitive on-line instrumentation provides a means of directly monitoring the waste stream composition.

II. LOCATION AND RESPONSIBILITY

This system will be located in the Alternative Combustion Laboratory (ACL) which comprises the northern half of the low bay area of Building 128 at TA-35. Lou Rosocha (CLS-6) is the principal investigator for this project and has overall responsibility for technical and program leadership, guidance and interfacing. Paul Wantuck, CLS-2, provides scientific and technical oversight to the project and is responsible for day-to-day operations.

III. ADDITIONAL PROJECT PERSONNEL

Other personnel who are authorized to operate this system are:

Roger Tennant, CLS-2 (mechanical engineering support)
Mike Kang, CLS-6 (electrical engineering support)
John Coogan, CLS-6 (electrical engineering and process modeling)
Graydon Anderson, CLS-4 (analytical diagnostics and instrumentation)
Rudy Vargas, CLS-2 (overall technical support)
Heidi Heck, CLS-6 (analytical diagnostics and instrumentation)
Laurie Berthold, CLS-6 (process modeling)

IV. APPARATUS DESCRIPTION

a. Packed Bed Reactor: A diagram of the PBR/SDP system is shown in Figure 1. Two bed reactors will be employed for the anticipated experiments. The smaller bed reactor is a stainless

steel cylinder with a diameter of 6.35 cm and a length of approximately one meter. The larger PBR (prototype version) is constructed of a Haynes alloy metal, has a diameter of 16.5 cm, and is 1.2 m long. Both reactors are filled with activated alumina beads producing a bed void fraction of approximately 50 percent. Operating temperatures for both PBR's range from 800 to 1000 C. The heat source for the reactors is a commercial electric tube furnace. For the smaller reactor, a single zone furnace is employed while for the larger version a three zone furnace allows for greater flexibility in axial temperature control.

The purpose of the packed bed reactor is to both volatilize and treat predominantly liquid based materials (which may or may not contain solvents) for subsequent processing by the second stage SDP. The liquid is introduced into the packed bed through a coaxial atomizer which acts to generate a fine spray above the bed material. The oxidizer gas will be either of air or a mixture of 20% oxygen and 80% argon. Flammable liquids are injected such that the fuel/oxidizer ratio is well below the lower explosion limit. In addition, by staying fuel lean it is possible to prevent the production of a flame. Thus, the PBR can be classified as a thermal treatment unit and <u>not</u> as an incinerator.

The atomizer on the small PBR has an average liquid flow capability of ~1 gm/min. For the 6" PBR, the fluid throughput should be on the order of 17 gm/min (~1 kg/hr). These numbers will vary slightly depending upon the composition and properties of the liquid.

The gas exiting the PBR is dropped in temperature by passage through a water-cooled heat exchanger. The gas can be directed through a series of traps (liquid trap, soda lime trap, activated carbon bed) and then to a stack exhaust or sent to the input of the silent discharge reactor. The exhaust line downstream of the PBR has ports which allow for gas sampling and subsequent analysis.

<u>b) Silent Discharge Plasma Reactor</u>: In general the SDP cells consist of two flat plate electrodes (at least one of which is covered by a dielectric barrier such as glass) which are physically separated to produce a discharge volume. Gas from the output of the PBR or from prepared mixtures is introduced into this volume, typically through a water bubbler, and subjected to a plasma discharge. The plasma discharge is initiated by application of a high voltage AC field to the electrodes. During the course of an experiment, feed gas pressure, gas flow rate, cell voltage and current, and consumed electrical power will be monitored. As with the PBR, the effluent exiting the SDP is sent through a series of traps and discharged through a stack vent. The effluent stream is monitored during operation with a variety of diagnostics.

Initial experiments will utilize a rectangular-shaped single cell employing an electrically grounded, nickel-coated bottom electrode and an upper water electrode which is connected to the high voltage power supply. A modified plasma cell which has a large volume and can process higher gas flow rates will be employed in later experiments.

c) Analytical Chemistry Diagnostics: The effluent stream from the PBR and SDP is analyzed with several on-line diagnostics including a Beckman Acculab 2 IR spectrophotometer, a Perkin Elmer Sigma 2000 Gas Chromatograph with both a flame ionization and electron capture detector (which allows ppb-detection and sensitivity), a UTI model 100C, 0-300 amu mass spectrometer, and a BIORAD FTIR spectrometer. These instruments provide a means of very accurately accessing the composition of the product (waste) streams.

V. HAZARDS AND PRECAUTIONS

V.1 Packed Bed Reactor

The hazards associated with PBR operation are thermal burns, flammable materials (oils), and hydrochloric acid which represents a process reaction product. The reactor operates at local atmospheric pressure obviating the need for pressure safety concerns.

The reactor is electrically heated to between 800 and 1000 C by a tube furnace which surrounds the bed. Exterior shielding prevents contact with reactor hot parts. The flammability issue is addressed by operating in a fuel lean condition, that is with the fuel/oxidizer ratio well below the lower explosive limit. For REGAL machining oil (which is >95% petroleum oil) the LEL is 0.6% by volume in standard air. The PBR typically operates at about 17% of the LEL. For comparable flow conditions, flammability is less of a concern for the TRIMSOL machining fluid, because even at 100% concentration, its composition is only 30% petroleum oil. IN the event of oxidizer gas flow cessation, a solenoid valve in the oil injector line closes preventing any further introduction of liquid compounds into the bed. Flow controllers are used to regulate the amount of material (gas and liquid) passed into the bed. Temperatures and pressures generated within the bed are constantly monitored by axially positioned thermocouples and mechanical gauges, respectively. Excessively high temperatures and pressures ("pinging") during the course of operation serve as an indication of approach to LEL.

Hydrochloric acid is formed as a waste product subsequent to the injection of chlorocarbon containing liquids into the PBR. A significant fraction of the HCl is removed (remaining fraction at the ppm level) by the bed material itself (wet HCL + alumina to form alumina chloride). Additional removal is provided by a liquid trap positioned downstream of the heat exchanger and upstream of the SDP inlet. In this trap, water containing dissolved HCl is condensed out of the effluent gas. A soda lime trap in conjunction with an activated carbon trap, both located in the exhaust line downstream of the SDP cell, provide for further removal of HCl. The PBR/SDP system is presently operating in an open loop configuration with final gas product exhaust through an outside-located stack. Note that only soda-lime and activated carbon traps will remove not only HCl but other unforeseen and undesired emission products. Thus, project personnel are not

exposed to waste stream components during system operation. Periodically, the bed material and other traps will have to be recharged and/or cleaned. During such operation, involved project personnel will wear safety glasses, lab coats and acid-resistant gloves. Prior to initiation of such activity, the appropriate MSDS will be reviewed. All employees must take Hazard Communication Training. The chemically contaminated material will be treated as hazardous waste and disposed of in proper fashion (see Section VI).

V.2. Silent Discharge Plasma Cells

The primary operational hazard with the SDP cells is high voltage. The power supplies utilized for cell operation have outputs as high as 30 kV with several tenths of an ampere peak current. Protection against high voltage exposure is accomplished in several ways. Only qualified project personnel are authorized to operate the SDP. The project's principal investigator shall designate such individuals. The SDP operators must be trained in CPR and have taken the Laboratory's electrical safety training course. At least two project personnel will be present in the ACL during SDP operation. The IEEE document entitled "IEEE Recommended Practices for Safety in High-Voltage and High-Power Testing" is utilized for general guidance in enacting operational procedures. A copy of this document is available at the ACL's ES&H station. The SDP cell is enclosed in a box constructed of polycarbonate panels. This box is interlocked with the high voltage power supply such that any attempt to access the cell during operation deactivates the power supply. Warning lights are activated during SDP operation and appropriate hazard signs are posted in the vicinity of the cell.

Secondary hazards associated with SDP operation include ozone and HCl generation as well as UV light emission from the plasma discharge. As noted previously, the PBR/SDP system represents an open loop configuration (with final gas discharge through a stack) such that reaction products produced within the cell are not released to the ACL environment. A thermal ozone destructor is connected to the SDP effluent line providing for effective elimination of O_3 from the reaction product stream. In general, the amount of chlorocarbons in the SDP influent stream will be small (<10 ppm level) because of the high destruction efficiency of the PBR with such compounds. Thus, the amount of HCl generated in the SDP will itself be small and can easily be removed by the soda lime and/or carbon traps before gas discharge through the Building 128 stack. Finally, the plasma discharge represents a weak source of UV radiation. The polycarbonate enclosure surrounding the cell prevents any of this radiation from escaping into the ACL.

V.3. Analytical Diagnostics

No apparent hazards are associated with operation of the various diagnostic equipment. All sample lines are connected directly to the instrumentation. A separate SOP for gas chromatograph operation is currently under review by HS Division personnel.

VI. Estimated Output from PBR/SDP System

For system operation at 1 kg-oil/hr (mixture comprised of 95% machining oil, 5% TCE) with 175% excess air (50% of LEL) at 1000°C, the following product amounts are anticipated.

Product		Volume	Production Rate (lbs/hr)
CO		<<1 ppm	6.5 (10^{-9})
CO_2		7.2%	3.14
O_2		8.3%	2.6
H_2O		7.5%	1.33
N_2		76.9%	21.2
HCl		447 ppm	0.016
NO_x	98.9% NO 1.1% NO_2	8.5 ppm	2.5 (10^{-4})
Ozone		~0.3%	0.14
TCE		<1 ppm	2.9 (10^{-7})

VII. WASTE PRODUCTION AND MANAGEMENT

As noted in Section V, the primary waste stream products are water, CO_2, CO, and HCl. At this time, HCL is considered to represent the major hazardous waste component produced in the process. The primary removal mechanism for (wet) HCl is via reaction with the alumina pellets in the PBR. The remaining fraction is captured in the liquid trap upstream of the SDP (dissolved in water) and the two traps downstream of the SDP. Periodically, the bed and trap material will have to be replenished with fresh material. The used material represents the primary source of hazardous waste in this effort. The collected liquid may under some circumstances be used for quantitative analysis of PBR effluent. If not used for this purpose it will be treated as a hazardous liquid waste.

Disposal of all hazardous waste will be done under the guidance of CLS-2's and/or CLS-6's hazardous waste coordinator The frequency of bed/trap cleaning and replenishment will be dependent upon several factors including length of system operation, quantity of material processed, etc.

In general, this project will adhere to the Waste Management Plan (Ch. VIII) and Waste Minimization Guidelines (Ch. XII, attachment VI) set forth in the Chemical and Laser Sciences Division ES&H Program Plan dated July 1991. A copy of this document is present in the ACL's ES&H station. Finally, personnel associated with this project will attend the Laboratory's Hazardous Waste Generator Training course.

VIII. GENERAL OPERATING PROCEDURES

VIII.a Packed Bed Reactor

With the fluid and oxidizer gas flow off, the fluid reservoir can be filled.

The electric furnace is turned on. Temperature of the furnace is controlled using a set-point controller.

When the PBR reaches the desired operating temperature(s) [small PBR has one zone, large PBR has three zones], the oxidizer gas is turned on and set to the desired flow rate.

The fluid reservoir flow valve is opened and the fluid flow adjusted to the desired value.

The oxidizer and fluid flow rates, the pressure and temperature distribution, and composition of the exhaust gas are monitored during the test. Adjustments to any of these parameters can be made as necessary to change operating conditions. The PBR effluent can be directed to the SDP or discharged through the exhaust stack.

Upon test completion, turn off the fluid flow. Continue to flow the oxidizer gas to react any remaining bed fluid.

Shut off oxidizer gas and either prepare for the next test or turn off the oven.

VIII.b Silent Discharge Plasma Cell

Ensure that the protective polycarbonate enclosure is in position around the cell.

Activate the high voltage power supply. The red warning light will come on automatically at this time.

Initiate gas flow. Gas may be supplied directly from the PBR or from prepared mixes. Monitor the effluent stream. Adjust cell power to maximize hydrocarbon and chlorocarbon destruction efficiency.

When a test is completed, shut off the gas flow and the high voltage power supply.

IX. SOP REVISION

This SOP will be revised and reviewed if it becomes apparent that a change in procedure is required, the experimental apparatus is significantly altered , or if it becomes necessary to change the input stream composition.

X. EMERGENCY PROCEDURES

X.1 General Emergency

1. In the event of any noted or suspected malfunction with the PBR or SDP, shut off all liquid and gas flows.
2. Deactivate the bed furnace and the SDP high voltage power supply.
3. Evaluate the situation. If a true emergency exists:
   a) Evacuate the laboratory.
   b) Call 911 and report emergency.
   c) Notify supervisor and group leader.

X.2 Thermal or Acid Burn

1. If possible, perform on-site first aid (i.e., treat injured area with cold water).
2. Transport the injured person to HS-2 for treatment.
3. Notify supervisor and group leader.

X.3 High Voltage Accident

In the event of a high voltage accident with the SDP:

1. Shut off main power breaker to SDP power supply.
2. If necessary, begin CPR.
3. Call 911 and report accident.
4. Notify supervisor and group leader.

X.4 Fire

In the event of a fire with the PBR:

1. Shut off gas and fluid flow.
2. Deactivate furnace
3. Evacuate the area.
4. Call 911 and report fire.
5. Notify supervisor and group leader and Building Manager.

X.5 Hazardous Gas Release

In the event of a release of hazardous gas in the ACL:

1 Evacuate the area immediately.
2. If possible shut down the PBR/SDP system.
3. Open all access doors to Building 128 and allow sufficient time for purging by outdoor air circulation.
4. If someone receives excessive exposure to the gas, or if it is a significant release, call 911 and notify the supervisor and group leader and Building Manager.
5. Repair the system.

XI. EMERGENCY CONTACTS

Contact	Name	Work Phone	Home Phone
Emergency		911	
Laboratory	Louis Rosocha	7-8493	672-3250
	John Coogan	5-0186	
	Roger Tennant	7-3284	471-3954
	Rudy Vargas	7-6662	471-2041
Group Office (CLS-2)	Wayne Dansen	7-4686	672-3686
Group Office (CLS-6)	Martin Piltch	7-7102	
Group Safety Officer (CLS-2)	Carl Wilson	7-1177	662-9346
Group Safety Officer (CLS-6)	John Jolin	7-7314	
Group Waste Coordinator	Leon Sonntag	7-3741	473-3112
Group Spill Coordinator	Carl Wilson	7-1177	662-9346
Division Safety Officer	Barbara Skaggs	5-8878	
Building Manager	Jerry Umphres	7-2383	
Division Safety offifer			

Packed Bed Reactor - Silent Discharge Plasma System

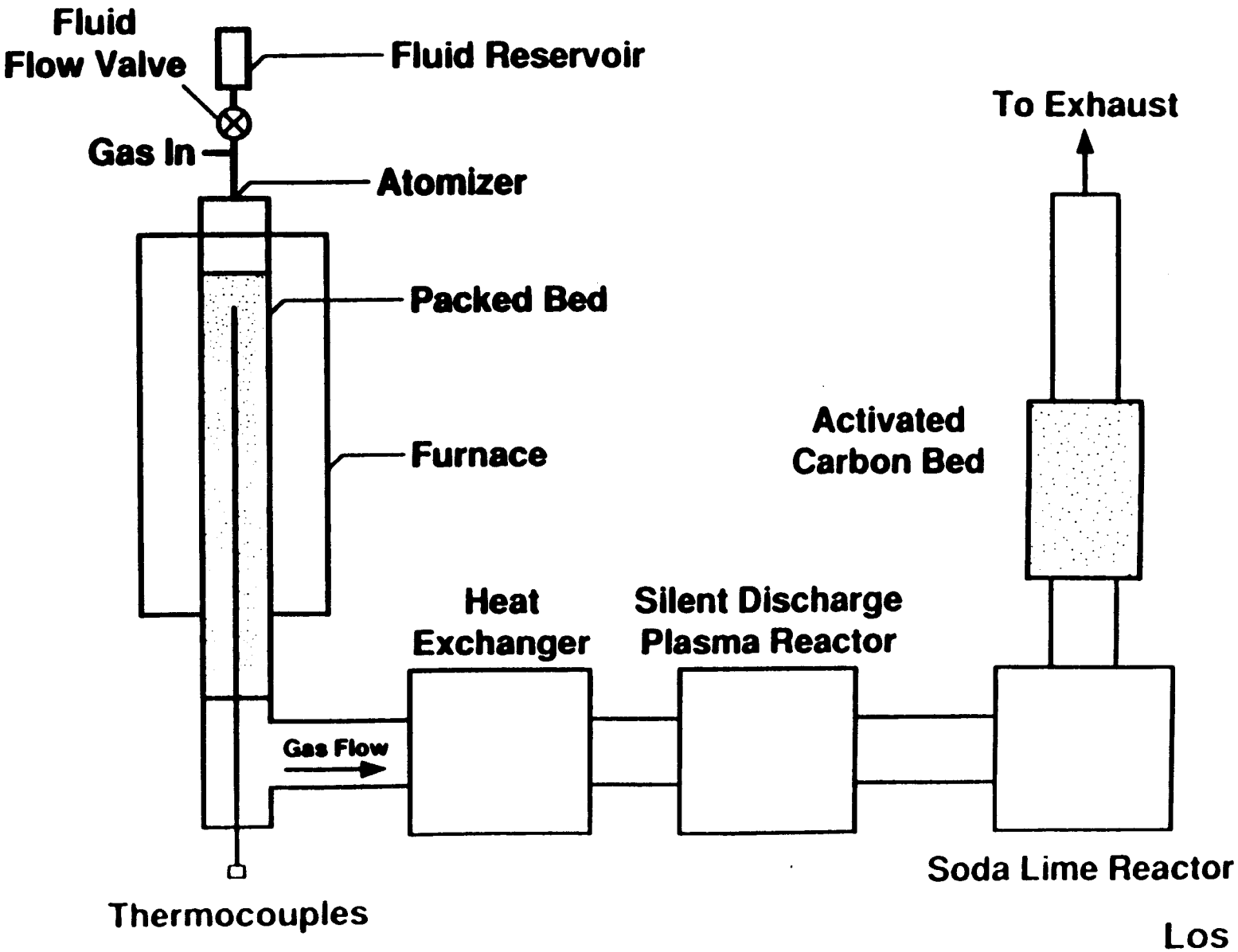

Los Alamos
CLS-91-2471

ATTACHMENT 5

INSPECTION RECORD FORM (IRF)

Los Alamos National Laboratory

RD&D PERMIT

HAZARDOUS AND MIXED WASTE FACILITY INSPECTION RECORD FORM

[1] FACILITY	[2] ☐ <90 DAY, GENERATOR STORAGE ☐ TREATMENT, STORAGE, DISPOSAL	[3] START DATE	[4] END DATE

[5] ☐ Containers ☐ Landfill ☐ Surface Impoundment ☐ Waste Pile ☐ Thermal Treatment ☐ Chem/Phys/Bio. Treat.
☐ Incinerator ☐ Misc. Unit ☐ Tank ☐ UST ☐ Land Treatment ☐ Underground Inj.

PART I - Enter condition of item inspected (OK or AR*) in column for day inspected.

ITEM	INSPECTED FOR	SUN	MON	TUE	WED	THU	FRI	SAT
[6] NO USE	CHECK IF NO WASTE IS PRESENT							
[7] (UN)LOADING AREA TANKS/CONTAINERS	SPILLS AND DETERIORATION							
[8] COMMUNICATION EQUIPMENT (PHONE/RADIO/ALARMS)	PROPERLY FUNCTIONING							
[9] TANKS (ALL ABOVE GROUND PORTIONS) MONITORING DATA	DISCHARGE CONTROLS CONDITION, LEAKS, LEVEL (6" FREEBOARD), CORROSION							
[10] SURFACE IMPOUNDMENTS AND CONTAINMENT	FREEBOARD (2 ft) SUDDEN DROPS IN LEVEL							
[11] PORTA BERM	LEAKS CONDITION							
[12] EYE WASH SAFETY SHOWERS	LEAKS, FUNCTIONING							
[13] STRUCTURAL INTEGRITY OF CONTAINERS/TANKS, VALVES, PIPES, AND FLANGES	DETERIORATION AND LEAKS, CORROSION, DAMAGE							
[14] COVER/LID OF CONTAINERS	CLOSED AND SECURED							
[15] WARNING SIGNS	POSTED & READABLE (BILINGUAL)							
[16] LABELS	"HAZARDOUS WASTE" PRESENT ON ALL CONTAINERS/TANKS							
[17] ACCUMULATION START DATE (<90 DAY STORAGE)	PRESENT ON ALL CONTAINERS, TANKS, NONE EXCEED 90 DAYS							
[18] RUN ON/OFF CONTROL (AREA L, G, H, P) LANDFILLS, DETONATION PADS	INTEGRITY, EROSION PONDING							
[19] COVER INTEGRITY (AREA L, G, H, P) LANDFILLS	EROSION, SUBSIDENCE WATER INTRUSION							
[20] SECURITY	CONDITION, FENCE/GATES/LOCKS							
[21] SITE LIGHTING	FUNCTIONS PROPERLY							

ITEM	INSPECTED FOR	SUN	MON	TUE	WED	THU	FRI	SAT
22 CONTAINMENT STRUCTURES	INTEGRITY, STANDING WATER VEGETATION, EROSION							
23 MANAGEMENT OF CONTAINERS	SEGREGATED ACCORDING TO COMPATIBILITY, 2 FT AISLE SPACE							
24 HOSE BIBS, WATER SUPPLY	LEAKS, FUNCTIONING							
25 STORAGE SHED (AREA L)	FLOOR DAMAGE, LIQUID							
26 ROAD/WORK SURFACES	CRACKS/POTHOLES							
27 WIND SOCK	DAMAGE, FUNCTIONING							
28 SHAFT COVER AND RAIL	PRESENT, DAMAGE							
29 PALLETS	INTEGRITY, DAMAGE							
30 TREATMENT TANKS	PROPER OPERATION, LEAKS							
31 REFRIGERATOR	DAMAGED CONTAINERS							
32 SPILL CONTROL, FIRE, AND EMERGENCY EQUIPMENT	PRESENT, AND IN GOOD WORKING ORDER							
33 INCINERATOR EMERGENCY WASTE FEED CUTOFF/ALARMS	PROPER OPERATING CONDITION OF ALL SHUTDOWN CONTROLS							
34 INCINERATOR PUMPS VALVES, PIPES. MONITORING CONTROLS	LEAKS/SPILLS/TAMPERING OPERATING WITHIN SPECS.							
35 PRESSURE VESSELS (S-SITE)	DETERIORATION AND SAND CONDITION							
36 OIL BURN PANS (S-SITE)	DETERIORATION & LEAKS							
37 HE BURN PADS (S-SITE)	DETERIORATION VEGETATION, SAND COND., EROSION							
38 RADIATION SAFETY	SIGNS, MONITORING ($\alpha\ \beta\ \gamma\ {}^3H$)							
39 DATE	DATE OF INSPECTION							
40 TIME	TIME OF INSPECTION							
41 INSPECTOR	INITIALS OF INSPECTOR							

PART II - For any AR (Action Required) in PART I above, describe below: action required, action taken, date of action. Attach additional sheets if necessary.

42 INSPECTOR	43 GROUP	44 DATE	45 TIME

Part I

1. FACILITY: Location information including Technical Area (TA), building, and room if applicable. Other location descriptors may be necessary. (e.g., TA-59-3-114 or TA-59-1-S. Dock)

2. <90 Day, Generator Storage should be checked if this location is intended for operation in accordance with generator requirements for storage of hazardous waste for less than 90 days.

   Treatment, Storage, Disposal should be checked if this location is listed in LANL's Hazardous Waste Facility Permit or Part A Application as a permitted or interim status TSD operation.

3. START DATE: The date of the first inspection for the week on that inspection sheet. (Usually the first working day of the week)

4. END DATE: The date of the last inspection for the week on that inspection sheet. (Usually the last working day of the week, however, if handling of hazardous waste occurs during the weekend inspections must be conducted.)

5. Check the appropriate box for the type of operation. Several boxes may be checked if necessary for those locations where inspections are combined on a single sheet. You must have prior approval from EM-8 to combine inspections for more than one unit.

6. NO USE: May be checked if the unit did not store, treat, dispose, or otherwise handle hazardous waste for the day/week in question. The individual responsible for the inspection must then only complete boxes 39, 40, 41 for that day/week. If any hazardous waste is subsequently placed at the site for any reason, a full inspection must be performed immediately, and every working day thereafter until all waste is properly disposed of.

7. Loading and unloading areas must be inspected daily when in use for signs of damage or deterioration that may lead to an accident or spill. This includes asphalt pads, and areas where containers or tanks are handled or contents thereof are transferred.

8. Communication equipment: Includes all telephones, two-way radios, and alarms for the area being inspected. Consult with EM-8 to determine what equipment is necessary at any particular location.

9. For tanks systems used for treatment or storage of hazardous waste, all above ground portions of the tank system, including any and all ancillary plumbing, must be inspected daily for signs of leaking, corrosion, deterioration, or improper operation. Tanks must be operated with a minimum freeboard of 6 inches. If the tank system includes discharge controls, overtopping controls, tank level alarms, or other monitoring equipment including leak detection equipment, all controls and relevant data must be checked to ensure they are operating properly and that operation is within design specifications for the system.

10. Surface impoundments must be operated with a minimum of 24 inches (60 cm) of freeboard from the top of the dike or berm to the surface of the waste therein. Inspectors must look for signs of leaks, deterioration, and erosion of dikes and berms, and any associated plumbing or valves. These could include dying vegetation, gullies and sudden changes in level.

11. For those locations where inflatable "Porta-Berms" are used as secondary containment for tanks and containers of hazardous waste, inspectors must ensure that they are adequately inflated. Inspectors must also check for the presence of liquids in the containment unit which could indicate leaks or spills of hazardous waste. All monitoring and leak detection systems must also be checked.

12. Where required, eye-wash and safety showers must be inspected to ensure proper operating condition. Outside locations must be checked for freezing.

13. All containers and tanks must be checked for structural integrity, leaks, corrosion, or damage. This item includes checking condition of all construction materials, fixtures, seams, and auxiliary equipment. See 9 above.

14. All tanks and containers used for treating or storing hazardous waste must have the cover or lid securely in place. Containers are not considered to be closed unless the lid/cover is fastened in the manner the manufacturer originally intended.

15. Required signs must be readable and prominently posted. TSD facilities and <90 day storage areas must be equipped with bilingual (english/spanish) signs with the legend "DANGER UNAUTHORIZED PERSONNEL KEEP OUT." TSDs must be identified with signs that read "HAZARDOUS WASTE STORAGE AREA." <90 day storage areas must be identified with a sign with the legend "<90 DAY HAZARDOUS WASTE STORAGE AREA."

16. All containers and tanks must be labeled with the words "HAZARDOUS WASTE" and with other words that identify the contents. Mixed waste must also be labeled as "RADIOACTIVE."

17. All containers and tanks of hazardous waste in TSDs or <90 day storage areas must be marked with the accumulation start date. At TSDs, containers without dates must be dated when they arrive at the facility. At <90 day storage areas, containers must be marked with the accumulation start date at the time the container first receives any waste. For <90 day storage areas, no containers may exceed 90 days from accumulation start date to the time they are delivered to a permitted treatment, storage, or disposal unit. Transportation is by EM-7 or its representatives only.

18. Landfills and detonation pads must have run-on and run-off controls inspected wherever present. Leachate collection systems, where present, must also be inspected. Items to be inspected for are proper operating condition, damage, erosion, contaminant migration, ponding, etc. Detonation pads must be inspected for unburned or undetonated explosives, ordnance and debris.

19. Landfill covers must be inspected at least weekly and after storms for evidence of erosion, subsidence, and water intrusion.

20. Site security must be verified. Items such as fences, gates, locks, etc. should be checked for proper condition and adequacy.

21. Site lighting must be adequate to prevent accidents related to hazardous waste operations and for any other night operations that may take place within the boundaries of the hazardous waste unit.

22. Secondary containment structures for hazardous waste operations must be inspected to verify proper operating condition and to ensure adequate capacity. Structures must also be inspected for the presence of standing water or hazardous waste. For incinerators and certain operations at TA-55, secondary containment includes inspections of gloves and gloveboxes, hoods, and ventilation systems where necessary.

23. All hazardous waste containers holding materials that may be incompatible with any other materials at that location must be separated from those materials by dikes, berms, or other physical barriers to prevent a possible reaction. All containers of hazardous waste must be stored in a manner that ensures a minimum of 2

feet of aisle space between containers. Drums containing free liquids or those holding hazardous waste (excluding mixed wastes) may not be stacked over two high.

24. TSD facilities must have water at adequate volume and pressure for fire protection available. Hose bibs should be inspected for proper operating condition and adequate pressure. Outside water supplies must be checked for freezing.

25. The storage shed at Area-L must be inspected for damage, free liquids that might indicate a leak, and chemical compatibility of materials stored therein.

26. Road and work surfaces, process floors, or other work surfaces at TSDs must be inspected for damage or erosion that could lead to a spill or accident, and for adequate secondary containment.

27. Wind socks, where required, at TSDs must be inspected to ensure that they are present and in proper operating condition.

28. Disposal shafts and shafts used for retrievable storage should have their covers securely in place and guard rails must be installed and in good condition.

29. Hazardous waste containers at TSDs and <90 day storage areas must be stored on pallets if they are stored outside without a roof.

30. Hazardous waste treatment tanks must be operated within design specifications and in accordance with SOPs and Work Plans. Tanks must be inspected for leaks or damage prior to operation.

31. Refrigerators used for storing hazardous waste, or samples thereof, must be inspected for proper operating condition and leaking or damaged containers.

32. Hazardous waste TSDs and <90 day storage areas must have adequate fire and spill control equipment for the types and volumes of waste present. Equipment must be present, in good working order, and appropriate for the material in question.

33. Incinerator waste feed cutoffs, emergency shutdown controls, and associated alarms or warning systems must be inspected for proper operating condition.

34. Incinerators, ancillary plumbing and equipment, and all monitoring controls must be inspected to ensure that they are in proper operating condition, and are being

operated within design specifications. Inspectors must also look for evidence of leaks, corrosion, spills, or tampering.

35. Pressure vessels must be inspected for signs of deterioration or damage. Condition of the sand and loading must also be checked to ensure adequacy.

36. Oil burn pans must be inspected for deterioration, damage, or leaks. Inspectors must also inspect for unburned explosives and debris.

37. HE burn pads must be inspected for deterioration, damage, leaks, or vegetation that could catch fire. Condition of the sand must also be checked. Inspectors must also inspect for unburned explosives and debris.

38. Radioactive materials must be properly placarded, labeled, and stored within controlled areas in accordance with AR 3-7. Containers should be monitored/swiped for outside contamination if suspected and all leaks or spills must be monitored to ensure adequate cleanup.

39. Inspectors will record the date of the current inspection.

40. Inspectors will record the time of the current inspection.

41. Inspectors will initial each daily inspection.

Part II

Inspectors must explain in detail, any deficiency noted above. Items to be included are: Type of problem, any action taken, and the date/time of the action. Additional sheets may be attached as necessary.

42. Signature of individual performing inspection.

43. Organization responsible for this location.

44. Date record was signed and completed.

45. Time record was signed and completed.

ATTACHMENT 6

CONTINGENCY PLAN

Los Alamos National Laboratory

RD&D PERMIT

CONTINGENCY PLAN

PACKED-BED REACTOR/SILENT DISCHARGE PLASMA TREATMENT UNIT

RD&D PERMIT

Los Alamos National Laboratory
Environmental Protection Group
Los Alamos, NM 87545

December 1992

TABLE OF CONTENTS

LIST OF ACRONYMS iii

1.0 INTRODUCTION 1
- 1.1 SITE DESCRIPTION 1
- 1.2 WASTES TESTED IN RD&D UNIT 1

2.0 EMERGENCY RESPONSE RESOURCES 2
- 2.1 EMERGENCY MANAGEMENT OFFICE 2
- 2.2 HEALTH AND SAFETY (HS) DIVISION RESPONSE GROUPS . . 3
- 2.3 ENVIRONMENTAL MANAGEMENT (EM) DIVISION RESPONSE GROUPS 5
- 2.4 OTHER LANL RESPONSE RESOURCES 5
- 2.5 CONTRACTED RESPONSE GROUPS 5
- 2.6 OUTSIDE RESPONSE AGENCIES 6

3.0 EMERGENCY EQUIPMENT AND COMMUNICATIONS 7
- 3.1 EMERGENCY CENTRAL ALARM SYSTEM 7
- 3.2 MAINTENANCE CENTRAL ALARM SYSTEM 7

4.0 CONTINGENCY PLAN IMPLEMENTATION 8
- 4.1 GUIDELINES FOR IMPLEMENTATION 8
- 4.2 EMERGENCY NOTIFICATION 9
- 4.3 EMERGENCY MANAGER ACTIONS 9

5.0 SPILLS 11
- 5.1 SPILL CONTROL PROCEDURES 12
- 5.2 DECONTAMINATION VERIFICATION 12

6.0 EXPLOSION 12

7.0 FIRE 13

8.0 EVACUATION 13
- 8.1 EMERGENCY PROCESS SHUTDOWN PRIOR TO EVACUATION . . 13
- 8.2 EVACUATION PLAN 14

9.0 SALVAGE AND CLEANUP 14

10.0 POST-EMERGENCY ASSESSMENT 15

11.0 EMERGENCY RESPONSE RECORDS AND REPORTS 15

12.0 CONTINGENCY PLAN AMENDMENT 16

13.0 REFERENCES 17

TABLE OF CONTENTS
(Continued)

LIST OF TABLES

TABLE NUMBER	TITLE
1	Response Groups and Agencies Available to the Emergency Management Office for Guidance and/or Emergency Assistance
2	Emergency Management Office Emergency Managers

LIST OF FIGURES

FIGURE NUMBER	TITLE
1	EMERGENCY NOTIFICATION STRUCTURE
2	EMERGENCY FACILITIES

LIST OF ACRONYMS

ADO	Associate Director of Operations
CAS	Central Alarm Station
CFR	Code of Federal Regulations
DOE	U.S. Department of Energy
DOT	U.S. Department of Transportation
EM	LANL Environmental Management Division
EMO	Emergency Management Office
EOC	Emergency Operations Center
EPA	U.S. Environmental Protection Agency
ERC	Emergency Response Coordinator
ERP	LANL Emergency Response Plan
HAZMAT Team	Hazardous Materials Response Team
HE	High Explosive
HS	LANL Health and Safety Division
HWMR	State of New Mexico Hazardous Waste Management Regulations
ICG	Incident Control Group
JCI	Johnson Controls World Services, Inc.
LAAO	Los Alamos Area Office
LAFD	Los Alamos Fire Department
LAMC	Los Alamos Medical Center
LANL	Los Alamos National Laboratory
LAPD	Los Alamos Police Department
M	Dynamic Testing Division
MAT	Materials Management Division
NAWAS	National Warning System
NMED	New Mexico Environment Department
NMT	Nuclear Materials Technology
OSHA	Occupational Safety and Health Administration
PA	Public Address
PTLA	Protection Technology Los Alamos
RCRA	Resource Conservation and Recovery Act
REA	Radiological Emergency Assistance
SOP	Standard Operating Procedure
TA	Technical Area
TRU	Transuranic
TSDF	Treatment, Storage, and Disposal Facility
WX	Design Engineering Division

CONTINGENCY PLAN

PACKED-BED REACTOR/SILENT DISCHARGE PLASMA TREATMENT UNIT

RD&D PERMIT

1.0 INTRODUCTION

This document presents contingency measures for RD&D units at Los Alamos National Laboratory (LANL). This document is consistent with the LANL Emergency Response Plan (ERP), prepared by the Laboratory's Emergency Management Office (EMO). The ERP incorporates emergency planning and preparedness strategies from Department of Energy (DOE) Order 5500.3A, "Emergency Planning and Preparedness for Operational Emergencies." Although it is not anticipated that large scale emergencies will occur at the RD&D unit due to the small quantities of waste material at hand, a detailed description of emergency response capabilities and procedures is provided here. The provisions of this plan will, be carried out immediately whenever there is a fire, explosion, or release of hazardous waste at an RD&D unit that could threaten human health or the environment.

1.1 Site Description

LANL and the residential communities of Los Alamos and White Rock are located in north central New Mexico on the Pajarito Plateau, situated west of the Rio Grande on the eastern slopes of the Jemez Mountains. The LANL facility covers approximately 111 square kilometers (27,500 acres) in and adjacent to Los Alamos County, and includes 34 active Technical Areas (TAs).

The principal mission of LANL is the application of science and technology to solve national problems including weapons development, energy supply, and conservation programs, while basis scientific research complements and strengthens its fundamental technical capabilities. LANL is owned by the DOE, and co-operated by DOE and the University of California.

1.2 Wastes Tested in RD&D Unit

Wastes that will be managed in the RD&D treatment unit will be halogenated and non-halogenated organic hazardous liquid wastes. The maximum amount of waste that will be managed at the unit will be 165 gallons (or three 55-gallon containers). Containers of hazardous wastes will be placed in secondary containment to minimize hazards from leakage.

Selected waste streams to be tested in the RD&D unit are described below.

Waste Description	Hazardous Waste Code(s)
Oil with 1,1,1-Trichloroethane from cleaning and repairing of vacuum pumps.	F001
Lacquer thinner from cleaning road painting equipment	D001
Mixture of acetone/ethanol from degreasing oily parts	F003

2.0 EMERGENCY RESPONSE RESOURCES

The primary resources for management of emergency incidents at LANL reside within the Emergency Management Office (EMO), which is part of the Associate Director of Operations (ADO) Office. During an emergency situation, line management (i.e., the group leader of the affected area) works with the designated Emergency Manager from the EMO who assumes the primary responsibility for managing emergency response operations.

Outside of LANL, contracted services and other agencies are also available for assistance during emergencies. These include the contracted services of Protection Technology Los Alamos (PTLA) (security) and Johnson Controls World Services, Inc. (maintenance), the Los Alamos Fire Department and Police Department, and the Los Alamos Medical Center.

All response groups and agencies called upon during emergencies are coordinated by the designated Emergency Manager. The emergency notification procedure is illustrated on Figure 1. The responsibilities and/or assistance available form the response groups/agencies are listed in Table 1 and discussed briefly in the following sections.

2.1 Emergency Management Office

The Director of LANL has delegated the authority and responsibility for administering and implementing the Laboratory's emergency management program to the ADO. The EMO is included within the ADO office. The EMO coordinates and issues the Laboratory's Emergency Response Plan and provides response coordination for emergencies. The EMO also provides a 24-hour Emergency Manager to respond to emergencies, and an Emergency Response Coordinator (ERC) to coordinate Health and Safety and Environmental Management personnel and resources. Additionally, the EMO maintains the Emergency Operation Center (EOC) in a ready condition, should the center be required. The primary EOC is located at TA-59-1; an alternate EOC is located at TA-49-113.

An Emergency Manager and an ERC will respond to emergency incidents involving the release of waste to the environment, including spills, fires, or explosions. The Emergency Manager

will initially assess the possible hazards to human health or the environment, and use whatever response group(s) or emergency equipment needed to control and contain the waste. In the event of an emergency, the Emergency Manager becomes the Incident Commander with full responsibility for all response actions. At the scene of the emergency, an Incident Control Group (ICG) will form which consists of responding emergency personnel who report to the Incident Commander. The ICG works together to take command and control of emergency situations.

EMO personnel designated as Emergency Manager are listed in Table 2. Assignment as the designated Emergency Manager is rotated. The Emergency Manager can be reached by contacting the EMO (667-6211 during working hours, 667-7080 after working hours) or the central Alarm Station (CAS) dispatcher (9-911).

The ERC is called out by and reports to the Incident Commander. In the event of an emergency, the ERC is responsible for coordinating the Hazardous Materials Response (HAZMAT) Team, Radiological Emergency Assistance (REA) Team, and other related Health and Safety and Environmental Management personnel and resources.

2.2 Health and Safety (HS) Division Response Groups

LANL maintains its own response forces within the HS Division to handle emergencies. These response groups include:

- Health Physics Operations (HS-1);
- Occupational Medicine (HS-2);
- Risk Management Support (HS-3);
- Industrial Safety and Hygiene (HS-5); AND
- Health Physics Policy and Programs (HS-12).

Any of these groups may respond to an emergency, if requested by the ERC, and are coordinated by the ERC (through their team leader,if applicable) in the ICG.

2.2.1 Health Physics Operations (HS-1)

Radiological incidents that occur at any of the TAs are evaluated by HS-1, Health Physics Operations. HS-1 will provide field personnel to perform radiological monitoring and decontamination under the supervision of Certified Health Physicists.

2.2.2 Occupational Medicine (HS-2)

LANL maintains its own medical facility operated by HS-2, Occupational Medicine. This group provides appropriate medical treatment for occupationally-related illnesses and injuries and monitors employees to assess the effectiveness of health protection programs. HS-2 maintains documented records of the

health status of employees and related occupational medicine activities.

Although HS-2 is not involved with on-scene emergency response, they maintain a central medical facility with a fully-equipped emergency room and decontamination facilities at TA-3, SM-409. Additionally, this group staffs three satellite first-aid stations at TA-53, TA-16 (S-Site), and TA-55. The locations of these emergency facilities are shown on Figure 2. Medical staff includes physicians, physician's assistants, registered nurses, x-ray technicians, a physical therapist, a clinical psychologist, assistance counselors, and clinical laboratory technicians.

HS-2 is supported by the Industrial Safety and Hygiene Group's (HS-5) capabilities for exposure and treatment information via telephone access to the National Library of Medicine's TOXLINE and CHEMLINE; the Toxicity Databank files; POISONDEX and TOMESPLUS (Micromedics); and the CC/INFO database files on MSDSs, NIOSH Technical Information Center information, and the Registry of Toxic Effects of Chemical Substances. HS-2 maintains the TOMES system at the central medical facility (SM-409) to assist the clinical staff with timely exposure and treatment information.

2.2.3 Risk Management Support (HS-3)

HS-3, Risk Management Support, is responsible for coordinating and publishing policy and guidance on safety training and operational safety for LANL. Additionally, HS-3 provides guidance and assistance to LANL divisions for safety analysis documents and to LANL groups for facilities analysis.

2.2.4 Industrial Safety and Hygiene (HS-5)

Personnel from HS-5, Industrial Safety and Hygiene, comprise the LANL HAZMAT Team. The HAZMAT Team is responsible for the aggressive mitigation of chemical and hazardous waste emergencies, including field decontamination of victims and responders. LANL standards require that the HAZMAT Team meet the training criteria for emergency response personnel specified in 29 CFR 1910.120(q)(6)(iii), (iv), and (v). The HAZMAT Team is part of the ICG reporting through the ERC. HS-5 also provides site field testing to determine the nature and extent of chemical contamination, provides information on correct handling of chemicals, makes recommendations on protective clothing and equipment, and provides exposure and treatment information.

2.2.5 Health Physics Policy and Programs (HS-12)

The Radiological Emergency Assistance (REA) Section of the Health Physics Policy and Programs Group (HS-12) provides a wide-range of health and safety support for radiological incidents at LANL. The REA Team coordinates with the ERC to provide radiological assessment and mitigation. This section also provides a contamination-control station at the scene of a radiological incident to process people working in a radiologically-

contaminated area, and is capable of performing decontamination of personnel.

2.3 Environmental Management (EM) Division Response Groups

At the scene, the environmental Management groups are coordinated in the ICG by the ERC.

2.3.1 Waste Management (EM-7)

The Waste Management Group (EM-7) is responsible for initial response actions at RCRA TSDFs. This group also provides guidance on proper treatment, storage, and off-site shipment of hazardous waste.

2.3.2 Environmental Protection (EM-8)

The Environmental Protection Group (EM-8) is responsible for regulatory compliance and provides guidance on regulatory requirements to other groups. After an emergency, EM-8 provides field surveys of soil, water, air, and biota to determine environmental effects of exposure. The group provides expertise in hydrogeology and meteorology to establish near- and long-term environmental effects of emergency conditions.

2.4 Other LANL Response Resources

2.4.1 Nuclear Materials Technology (NMT)

Several personnel from the Nuclear Materials Technology (NMT) Division have been trained in emergency response procedures. In the case of an emergency interrupting operations, these personnel are responsible for monitoring for leaks, pressure buildup, gas generation, or equipment ruptures.

2.5 Contracted Response Groups

Contracted response groups report to the Operations Officer in the ICG or directly to the Incident Commander in the event of a smaller emergency.

2.5.1 Protection Technology Los Alamos (PTLA, Pro Force)

The Pro Force is responsible for LANL security, which is provided by Protection Technology Los Alamos (PTLA) under contract to LANL. During an emergency, the Pro Force activities include maintenance of security, direction of traffic within LANL, and control of access to the emergency scene. The Pro Force maintains the necessary equipment to perform these functions, such as crowd control equipment and patrol cars.

2.5.2 Johnson Controls World Service, Inc. (JCI)

Johnson Controls World Services, Inc. (JCI) provides a maintenance support force under contract to LANL. This support force is under LANL's direction in an emergency. JCI conducts

inspections of LANL equipment, maintains equipment, and participates in post-emergency cleanup under the direction of HS-5.

2.6. Outside Response Agencies

Outside response agencies report to the Operations Officer in the ICG. In smaller emergencies, they may report directly to the Incident Commander.

2.6.1 Los Alamos Fire Department

The Los Alamos Fire Department (LAFD) provides fire protection and ambulance coverage for the communities of Los Alamos and White Rock and for LANL. In the case of an emergency within LANL, the Fire Department coordinates fire suppression efforts. LANL requires that Fire Department personnel meet the training criteria of emergency response personnel specified in 29 CFR 1910.120(q)(6)(i) and (ii).

2.6.2 Los Alamos Police Department

In keeping with the principle of handling emergencies internally, the Los Alamos Police Department (LAPD) has only minimal interaction with LANL in an emergency. That interaction is limited to traffic control on DOE roads with public access and to criminal investigations. The limits of interaction are included in a signed agreement.

2.6.3 Los Alamos Medical Center

Those medical cases which cannot be handled at HS-2 will be transferred to the Los Alamos Medical Center (LAMC), where LANL maintains a fully-equipped decontamination room adjacent to the emergency room. In the event that a case is sent to the hospital, support for the emergency room staff is provided by HS-2 medical personnel, HS-1 Health Physics Operations staff, HS-5 Industrial Safety and Hygiene staff, and HS-12 Health Physics Policy and Programs personnel. This assistance is coordinated through LANL's EMO.

3.0 EMERGENCY EQUIPMENT AND COMMUNICATIONS

Effective emergency response at LANL requires an efficient communication system which will integrate all personnel into the emergency response. The initial phase of an emergency will involve a small number of individuals at the affected area and notification of the designated Emergency Manager.

3.1 Emergency Central Alarm System

The emergency Central Alarm Station (CAS) is located at TA-64-1. This station is manned by Pro Force personnel 24-hours a day and is equipped with telephones, medium- and short-range radios, direct-line telephones, a National Warning System (NAWAS)

station, and an emergency power system. The fire alarm board at the control room gives the location of automatic and pull fire alarms.

The emergency central alarm system is activated by:

- Telephone communication (9-911 or 911);
- Automatic fire alarms;
- Manual pull alarms;
- Computer interface (to warn of critical events at selected facilities);
- Break-in security; and
- Radio communications.

Activation of the emergency central alarm system automatically alerts the CAS dispatcher, the Pro Force,and the Los Alamos Fire Department. The required emergency response groups are then notified of the problem by the Emergency Manager, ERC, and/or the CAS dispatcher.

3.2 Maintenance Central Alarm System

The maintenance central alarm system is manned by JCI personnel 24 hours a day. The maintenance alarm system interfaces with computers which monitor sensitive equipment throughout LANL. Activation of an alarm triggers a call-out procedure to alert maintenance personnel and management supervision to correct the malfunction.

Internal communication systems at LANL include:

- Centrex telephone system;
- Medium-range radio nets (30-60 miles);
- Limited-range radio nets (3-10 miles);
- Telephone/radio paging; and
- Two-way hand-held radios.

Off-site communications with Federal, State, County, and other agencies are maintained by the following:

- Centrex telephone system;
- Private telephone lines (if Centrex fails);
- Medium-range radio nets (30-60 miles);
- Limited-range radio nets (3-10 miles);

- Two NAWAS; and

- KRSN radio link (local radio station).

The LANL EOC, located at TA-59-1 and maintained by the EMO, operates radio systems on key LANL and off-site channels. Emergency personnel responding to on-site incidents have the benefit of wide-area radio coverage using the EOC facilities. After hours, the Emergency Manager is responsible for activating whatever support personnel, services, or equipment is needed.

4.0 CONTINGENCY PLAN IMPLEMENTATION

The following section defines the guidelines used to initiate this Contingency Plan and the resulting actions taken.

4.1 Guidelines for Implementation

The decision to implement this Contingency Plan depends upon whether or not an imminent or actual incident involving a release of hazardous waste or hazardous materials to the environment could threaten human health or the environment. The following guidelines shall be used by the Emergency Manager in making the decision whether or not to implement this plan.

This Contingency Plan will be implemented in the following situations:

Spills

- A hazardous waste spill cannot be contained with application of absorbents;

- Precipitation threatens to move spilled material off-site;

- A hazardous waste spill caused the release of flammable materials, creating a fire or explosion hazard;

- A hazardous waste spill results in toxic fumes which threaten human health; or

- A earthquake or other natural disaster threatens containment integrity.

Explosions

- An unplanned explosion involving hazardous waste occurs; or

- An imminent danger exists that an explosion involving hazardous waste could occur.

Fires

- Any fire involving hazardous waste that cannot be controlled with fire extinguishers; or
- Any building, grass, forest, or nonhazardous waste fire that threatens to ignite hazardous material at the RD&D unit.

4.2 Emergency Notification

During working hours, immediately upon discovery of an imminent or actual incident involving hazardous waste at the RD&D unit, line management and the Emergency Management Office will be notified by on-site personnel. During nonworking hours, all incidents involving hazardous waste at the RD&D unit shall be reported to the designated Emergency Manager or the CAS dispatcher. In the case of fire involving hazardous waste at the RD&D unit, notification of these individuals is superseded by the LANL fire alarm system. A fire is reported by dialing 9-911, activation of automatic alarms, or activation of a fire pull box. All fire alarms alert the CAS Dispatcher, the Los Alamos Fire Department, and the PTLA Pro Force.

The first arriving emergency trained person becomes the temporary Incident Commander. Once the Emergency Management Office is notified of the emergency, the designated Emergency Manager shall proceed to the scene and be briefed by the temporary Incident Commander, building/area personnel, and other emergency units/teams. The Emergency Manager may then assume the position of Incident Commander. The Incident Commander may recommend activation of the EOC to the ADO. Upon concurrence of the ADO, the EOC will be activated and the necessary members of the Emergency Management Team are determined. The Incident Commander shall form an ICG and contact the ERC. The ERC will notify the appropriate emergency response groups. Table 1 describes the assistance available from each response group. The Incident Commander may use this list as criteria to determine which groups to contact in an emergency. Each response group maintains an on-call person and/or a call-down procedure to respond to emergencies.

4.3 Emergency Manager Actions

Upon notification of an incident, the Emergency Manager (Incident Commander) shall:

1. Proceed directly to the scene.
2. Call the ERC.
3. Assess the nature of the incident (e.g., through communication with the temporary Incident Commander).
4. Assume Incident Command.

5. In conjunction with the ERC, determine the quantities and types of hazardous waste involved.

6. Based on the guidelines in Section 4.1 of this plan, determine if implementation of this Contingency Plan is warranted.

7. Recommend activation of the EOC, if necessary.

Upon deciding to implement this Contingency Plan, the Incident Commander will perform the following additional response actions using the ERC, when appropriate:

1. Assess the hazards to human health and the environment including both direct and indirect effects, such as generation of toxic, irritating, or asphyxiating gases and/or hazards of runoff of water or chemicals used for fire suppression. An individual designated by the Emergency Manager will use the guidelines in Section 4.1 to assess the hazards to human health and the environment. If any of the criteria under Section 4.1 are met, evacuation of the immediate area will be initiated if the response group leader has not already accomplished evacuation of the area.

2. Determine if evacuation of the local area is advisable and, if so, immediately notify appropriate response groups and the LAPD.

3. Notify required response personnel and the DOE Los Alamos Area Office (LAAO) by phone, radio, or through the CAS Dispatcher. In the case of fire, the Emergency Manager shall confirm that the Fire Department Officer-in-Charge at the scene is aware of the special hazards associated with hazardous waste, and will assume Incident Command.

4. Warn the remaining on-scene and response personnel of imminent or actual hazards using the radio or the public address (PA) system.

5. In emergency situations, the activated EOC Crisis Manager (Laboratory Director of designee), through the Environmental Management representative, will notify the New Mexico Environment Department (NMED) at (505) 827-9329, and the National Response Center at (800) 424-8802, reporting:

   - Name and telephone number of the reporter;
   - Name and address of the facility;
   - Time and type of incident;
   - Name and quantity of material involved, to the extent known;

- The extent of injuries, if any; and
- The possible hazards to human health or the environment outside the facility.

6. Advise the response groups of hazards to minimize personnel exposure and expedite mitigation.

Once control of the emergency is established, the Incident Commander will delegate cleanup and decontamination responsibilities to the affected areas's line management. The responsibility group leader or group leader designee shall:

1. Arrange for site cleanup.
2. Provide for proper handling of recovered waste, contaminated soil, or contaminated surface/groundwater.
3. Provide for decontamination of equipment as needed.
4. Arrange for replacement and/or repair of equipment, as needed.
5. Ensure that testing is conducted to verify successful cleanup.

Within 15 days of the incident, DOE LAAO will submit the report described in Section 10.0 to the Environmental Protection Agency (EPA) Regional Administrator and the NMED.

5.0 SPILLS

Sudden releases include spills of hazardous waste which pose a significant threat to human health or the environment. Spill incidents resulting in a sudden release of hazardous waste to the environment which cannot be contained or which presents a threat to human health or the environment require implementation of this Contingency Plan.

The general steps in handling hazardous waste spills are:

- Containment, including spreading absorbents or forming temporary dikes;
- Waste pickup and packaging in sound containers; and
- Decontamination followed by testing to assure adequate cleanup.

The steps to be taken for spill mitigation will be determined by the Incident Commander with input from the ERC. If initial mitigation of the spill is necessary before the Emergency Manager arrives, a qualified member of the affected area's operating group will serve as the temporary Incident Commander.

5.1 Spill Control Procedures

Absorbent will be added to the waste spill during spill control.

5.2 Decontamination Verification

Decontamination will be accomplished at the spill site. After the spilled material has been absorbed, the material will be containerized. Because the floor of the RD&D unit is cement, water or an appropriate solvent will be used to clean the area and this liquid will be absorbed with universal sorbent and containerized.

A sample of unused decontamination water or solvent and absorbent material will be taken prior to the final washing to establish baseline data. A composite sample will then be taken of the material used to absorb the final waste water. No hazardous waste constituents should be present in this sample that were not present at similar levels in the unused decontamination water. If the sample exhibits any of the characteristics of a hazardous waste as defined in 40 CFR Part 261 Subpart C, or a hazardous constituent as listed in 40 CFR Part 261 Appendix VIII (and not detected in the unused decontamination water) is present above established health-based levels, the decontamination procedures will be repeated. An alternative demonstration of decontamination may be proposed and justified to the Secretary, NMED, who will evaluate the proposed alternative in accordance with the standards and guidance then if effect. If the proposed alternative is accepted, decontamination levels will meet the levels approved by the NMED. Each composite sample will be taken using a thief or trier as specified in EPA's SW-846, "Test Methods for Evaluating Solid Waste," Physical/chemical Methods, latest edition.

6.0 EXPLOSION

A sudden release caused by an explosion may result in a significant threat to human health or the environment. Implementation of this Contingency Plan is required whenever a sudden release which cannot be contained or which presents a threat to human health or the environment occurs as a result of an explosion.

In the case of explosions, all personnel will immediately evacuate the area. Any injured personnel will be decontaminated in the field, if required and if time allows, and transported by LAFD ambulance to an HS-2 facility of LAMC for treatment. If an injury is severe and requires immediate medical evacuation, the injured person will be wrapped to contain contamination. The Emergency Management Office must be contacted immediately upon activation of the emergency central alarm system, and then the Emergency Manager will ensure that all necessary emergency response personnel are alerted. The LAFD is notified automatically upon central alarm system activation. The Emergency manager assumes Incident Control and will remain near

the site, but at a safe distance, to inform the personnel responding to the explosion of the known hazards.

Upon arrival at the scene, the LAFD Senior Officer will evaluate information provided by the group leader, other site personnel, other members of the ICG, and Incident Commander to select the appropriate fire-fighting methods and tactics. The LAFD Senior Officer will direct fire fighting operations under the general direction of the Incident Commander.

7.0 FIRE

Fires may result in a sudden release of hazardous waste that poses a significant threat to human health or the environment. Implementation of this Contingency Plan is required whenever a fire incident results in a sudden release of hazardous waste which cannot be contained or which presents a threat to human health or the environment.

Depending on the size of the fire, portable fire extinguishers may be used. However, LANL policy discourages the use of portable fire extinguishers by employees and encourages immediate evacuation of the area and notification of the Los Alamos Fire Department. The Emergency Manager will alert all necessary emergency response personnel. The Fire Department is automatically alerted when the emergency central alarm system is activated. If the fire spreads or increases in intensity, all personnel should evacuate to an area designated by the responsible group leader or Emergency Manager. The Emergency Manager assumes Incident Command and should remain near the scene to advise the personnel responding to the fire of the known hazards. The Emergency Manager is familiar with spill response and emergency actions and, therefore, is qualified to advise fire-fighting personnel of the potential hazards involved.

Upon arrival at the scene, the LAFD Senior Officer will evaluate information provided by the group leader, other site personnel, other members of the ICG, and Incident Commander to select the appropriate fire-fighting methods and tactics. The LAFD Senior Officer will direct fire-fighting operations under the general direction of the Incident Commander.

8.0 EVACUATION

A facility will be evacuated upon the voice command to evacuate the area, or upon the sounding of the evacuation alarm or the fire alarm.

8.1 Emergency Process Shutdown Prior to Evacuation

Personnel are instructed to shut down equipment prior to evacuating a building unless an immediate building evacuation is announced or signaled.

8.2 Evacuation Plan

Emergency situations may warrant the shutdown and evacuation of an area(s) or building(s) in order to protect personnel and property, to anticipate the emergency condition, or to enhance the appropriate response.

To initiate building evacuation, the evacuation or fire alarm is sounded and/or the public address system is used. The evacuation alarm cannot be silenced or reset by site personnel. The Fire Alarm Maintenance Section at 667-4027 and the LAFD Platoon Chief at 667-7026 can silence and reset the alarm.

To evacuate a portion of a building, the PA system is more appropriate. The PA system will notify the occupants of the area to be evacuated and, additionally, will advise personnel in the rest of the facility of the existence of a problem in that specific area.

The PA system, fire alarm, or evacuation alarm may be used to initiate an evacuation. Once evacuation has been initiated, personnel are to turn off all equipment, if conditions allow, that could contribute to the hazard if left unattended. Personnel should then leave the affected area and go to the muster area.

In the event of an evacuation of only a portion of the building, the responsible group leader will designate a control point at the closest safe location (e.g., considering wind direction). This area will be outside the affected area and will serve as a muster point where the group leader or his designee can oversee evacuation operations and work to prevent further spread of the hazard.

For a small-scale evacuation, a responsible on-site person may direct evacuation. For a large-scale evacuation, the emergency central alarm system may be activated, the EMO will be notified and, until the Emergency Manager arrives at the scene to assume responsibility for the evacuation, a responsible on-site person may begin the evacuation process.

9.0 SALVAGE AND CLEANUP

The affected area will be surveyed by appropriate representatives from the HS and EM Groups before salvage, cleanup, and return to normal operations. Visual inspections of the affected area will be supplemented by sampling to determine whether cleanup is complete. After determination of any existing hazards from toxic or hazardous gases or fumes, electrical hazards, radiological hazards, or other unsafe conditions, personnel, or selected team will reenter the area to perform designated contamination tasks, repairs, and salvage to allow the return to normal operations. After an emergency, the Incident Commander will turn the operation over to line management, who will:

- Provide for proper handling of recovered waste, contaminated soil or surface water, or any other material that results from a release, fire, or explosion;

- Arrange for site cleanup procedures to be completed; and

- Ensure that emergency equipment is cleaned, decontaminated, and fit for its intended use before operations are resumed.

Damage assessment, recovery, and reporting shall be performed within the requirements of DOE Order 5000.3A, as referenced by DOE Order 5500.3A (Emergency Planning and Preparedness for Operational Emergencies). The Incident Commander assumes the coordination of post-emergency actions, particularly during the time period immediately after the emergency. Such actions include cleanup operations, repair of vital equipment, or interim hazard-removing operations (such as demolition of unstable walls). The services of the affected operational organizations, HS and EM Divisions, JCI, and other on-site resources will also be utilized to estimate cleanup costs and operational impact.

10.0 POST-EMERGENCY ASSESSMENT

When the emergency is over, the cause of the emergency and the effectiveness of the response are investigated, in order that future emergencies may either be prevented, or that the response to them may be more effective. Following each event requiring the implementation of this Contingency Plan, the Emergency Manager will schedule and conduct a critique with representatives of all responding groups, building/area representatives, and LANL management to determine the adequacy of the response.

11.0 EMERGENCY RESPONSE RECORDS AND REPORTS

The details of any incident that requires implementation of this Contingency Plan must be recorded by the responsible group or section leader for the RD&D unit. This Incident Report must include the time, date, and full description of the incident.

Any emergency that requires implementation of this Contingency Plan will be reported in writing within 15 days to the NMED. The report, submitted DOE LAAO, shall include the following data:

- Name, address, and phone number of owner or operator;

- Name, address, and phone number of the facility;

- Date, time, and type of incident (e.g., fire, explosion, spill);

- Name of material involved;

- Quantity of material involved;
- Extent of injuries (if any);
- Assessment of actual or potential hazards to human health or the environment; and
- Estimated quantity and disposition of material recovered from the incident.

12.0 CONTINGENCY PLAN AMENDMENT

This Contingency Plan will be reviewed by the EMO, EM-7, EM-8, and by HS-5 and HS-12, if necessary, and will be immediately amended if determined to be inadequate to handle spills, explosions, fires and whenever:

- The facility permit is revised;
- There is significant change in the design or operation of the facility (i.e., waste quantities handled and handling techniques);
- The list of Emergency Managers changes;
- Operating experience or technical review demonstrates that the plan is inappropriate.
- Actual implementation of the plan demonstrates inadequacies.

13.0 REFERENCES

Benchmark Environmental Corporation, 1990, "TA-54 Muster Stations," prepared for Los Alamos National Laboratory, November 1990.

Los Alamos National Laboratory, "RCRA Interim Status Contingency Plan for Mixed Waste Units," Los Alamos, New Mexico, May 1992.

Los Alamos National Laboratory, Emergency Management Office, "Emergency Response Plan," Los Alamos, New Mexico, September 1991.

Los Alamos National Laboratory, Attachment D (Contingency Plan) to RCRA Operating Permit, issued by New Mexico Health and Environment Department, November 8, 1989.

U.S. Department of Energy, 1990, "Emergency Planning and Preparedness for Operational Emergencies," DOE Order 5500.3A, Washington, D.C.

U.S. Department of Energy, 1990, "Spill Prevention, Control, and Countermeasure Plan for the Los Alamos National Laboratory," Revision 2.

U.S. Department of Energy, 1988, "Radioactive Waste Management," DOE Order 5820.2A, Washington, D.C.

U.S. EPA, 1990, "Hazardous Waste Operations and Emergency Response," U.S. Environmental Protection Agency, 29 CFR Part 1910.120.

U.S. EPA, 1990, "Interim Status Standards For Owners and Operators of Hazardous Waste Treatment, Storage, and Disposal Facilities," U.S. Environmental Protection Agency, 40 CFR Part 265.

U.S. EPA, 1986, "Test Methods for Evaluating Solid Waste," Laboratory Manual Physical/Chemical Methods, Volumes 1A-1C, EPA-SW-846, U.S. Government Printing Office.

TABLE 1
RESPONSE GROUPS AND AGENCIES AVAILABLE TO THE EMERGENCY MANAGEMENT OFFICE FOR GUIDANCE AND/OR EMERGENCY ASSISTANCE

LABORATORY CONTROLLED RESPONSE GROUP	TELEPHONE	RESPONSIBILITIES
HS-1, Health Physics Operations	667-5296	Radiological monitoring and decontamination.
HS-2, Occupational Medicine	667-7251	Emergency medical treatment.
HS-3, Risk Management Support	667-3363	Provides personnel to perform risk analyses. Provides guidance on operational safety.
HS-5, Industrial Hygiene and Safety	665-4427	Site evaluation - field testing to determine the nature and extent of contamination (nonradiological). Specify protective clothing and equipment. Provide HAZMAT Team.
HS-12, Health Physics Policy and Programs	667-5296	Provide support for radiological incidents, provide REA Team capable of performing radiological assessments and personnel decontamination. Maintain radiological emergency preparedness for the Laboratory.
EM-7, Waste Management	667-5839	Provide guidance on proper treatment, storage, and off-site shipment of mixed waste.
EM-8, Environmental Protection	667-5021	Field surveys to determine spread of contamination and adequacy of cleanup.
EM-9, Environmental Chemistry	667-3269	Chemical/radiological analytical services.

TABLE 1
(Continued
RESPONSE GROUPS AND AGENCIES AVAILABLE TO THE
EMERGENCY MANAGEMENT OFFICE FOR
GUIDANCE AND/OR EMERGENCY ASSISTANCE

LABORATORY CONTROLLED RESPONSE GROUP	TELEPHONE	RESPONSIBILITIES
NMT, Nuclear Materials Technology	667-2556	Monitor for leaks, pressure buildup, gas generation, or equipment ruptures in the event of interruption of operations at TA-55 due to an emergency.
Protection Technology Los Alamos Protective Force (Pro Force)	667-4437	Traffic control, security.
Johnson Controls World Services, Inc.	667-6191	Maintenance personnel and equipment, assist in waste cleanup under HS-5 guidance.
NON-LABORATORY CONTROLLED RESPONSE GROUP	**TELEPHONE**	**RESPONSIBILITIES**
Los Alamo Fire Department	9-911	Firefighting personnel and equipment.
Los Alamos Police Department	9-911	Traffic control of DOE roads with public access.
Los Alamos Medical Center*	662-4201 or 911	Medical services.

* Medical services related to hazardous and mixed waste injuries provided under the direction of HS-2.

TABLE 2
EMERGENCY MANAGEMENT OFFICE EMERGENCY MANAGERS*

EMERGENCY MANAGERS	LABORATORY TELEPHONE	HOME TELEPHONE	HOME ADDRESS
James S. Griffiths	7-6211	662-9155	190 Manhattan Loop, Los Alamos, NM
Gary W. Bequette	7-6211	662-4554	2369-B 33rd Street, Los Alamos, NM
Frank G. Pearce	7-6211	984-8901	110 Delgado Street, Los Alamos, NM
Deanna M. Seitz	7-6211	662-7356	65 San Juan, Los Alamos, NM
James A. Walton	7-6211	455-3316	Route 11, Box 20, Space 19, Santa Fe, NM

* To ensure immediate response, the Emergency Manager may be reached at the Emergency Management Office, 667-6211 or, after hours, 667-7080.

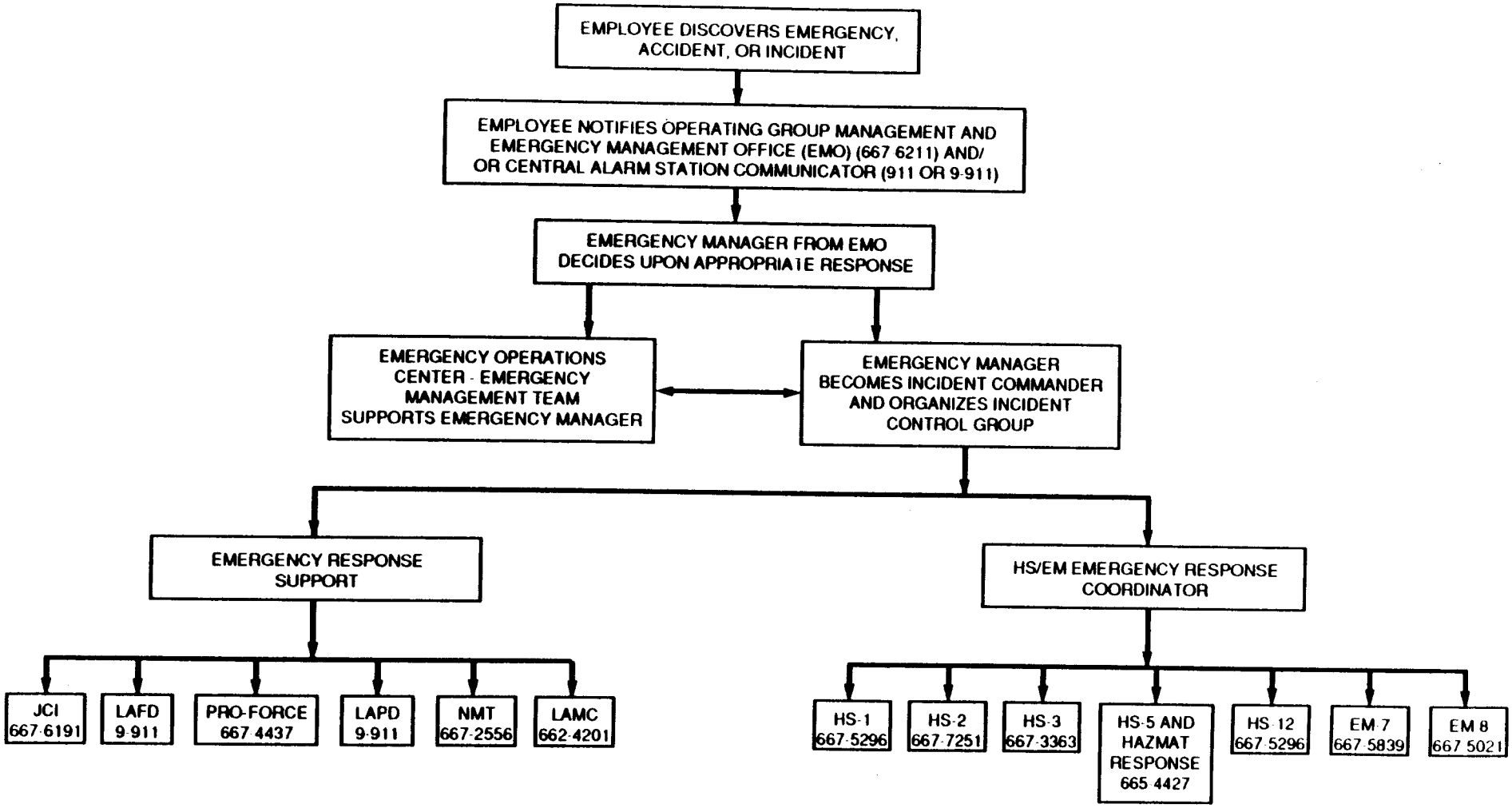

Figure 1 Waste Emergency Notification Structure

FIGURE 2. EMERGENCY FACILITIES

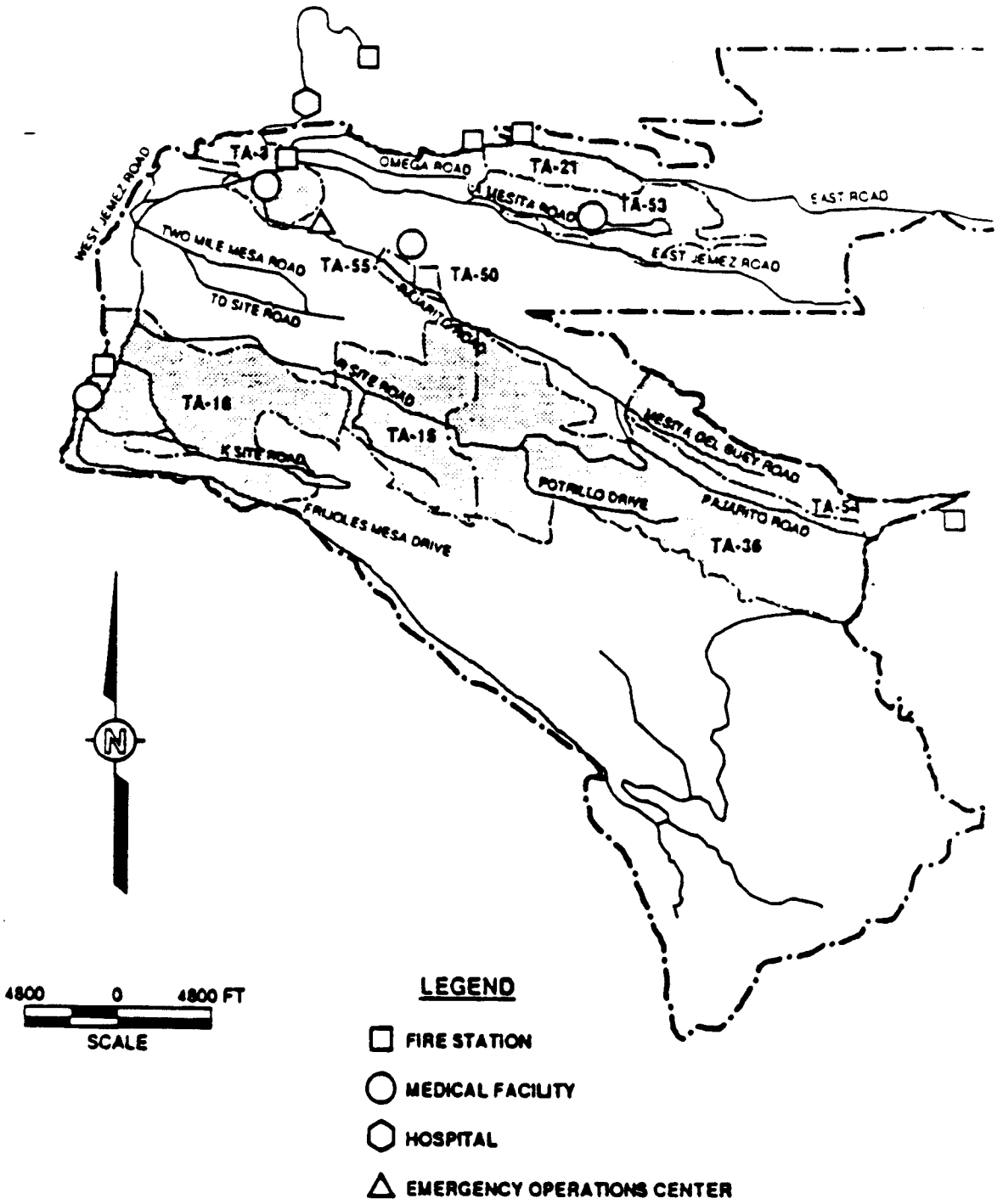

ATTACHMENT 7

QUALIFICATIONS OF PRINCIPAL INVESTIGATOR

Los Alamos National Laboratory

RD&D PERMIT

Louis A. Rosocha
CLS-6, Advanced Laser and Systems Technology Group, Chemical & Laser Sciences Division
Los Alamos National Laboratory

BIRTH

Harrison, Arkansas	February 7, 1950

EDUCATION

BS (Physics)	University of Arkansas, Fayetteville	1972
MS (Physics)	University of Wisconsin, Madison	1975
PhD (Physics)	University of Wisconsin, Madison	1979

EMPLOYMENT HISTORY

Los Alamos National Laboratory

Deputy Group Leader, Pulsed Power Systems Group, CLS-7 now Advanced Laser & Systems Technology Group, CLS-6	1987-present
Project Manager, Aurora KrF/ICF Laser System	1984-1989
Amplifier System Manager, Aurora KrF Laser	1983-1984
Staff Member, Antares CO_2/ICF laser project and Aurora KrF laser project.	1981-1983

National Research Group, Inc., Madison, WI

Vice-President for R&D and Staff Scientist	1975-1981

PROFESSIONAL ASSOCIATIONS

American Physical Society
International Ozone Association
Sigma Pi Sigma

PROFESSIONAL EXPERIENCE

Dissertation research involved experimental and theoretical investigations of plasma chemistry in transient electrical discharges in oxygen, the associated production of ozone, and the application of relativistic electron beam physics and pulsed power technology to the excitation of proposed liquid excimer lasers.

Fifteen years of working experience in experimental and applied physics, plasma chemistry, pulsed power, and technical management. In private industry, major work focus was on research, development, and manufacturing related to pulsed UV and dye lasers, high voltage switches, and ozone generators. At Los Alamos, focus was on pulsed power, electron beams, and amplifier technology for high energy (kJ-class) CO2 and KrF lasers for ICF. Served as project manager for the overall design, construction, and testing of a multi-kilojoule angular-multiplexed KrF/ICF laser system prototype. Responsible for advanced electron-beam pumping technology development for large KrF/ICF lasers. Present research emphasis is in the applications of pulsed power, electrical discharge plasmas, and relativistic electron beams to waste treatment and chemical synthesis.

ATTACHMENT 8

TRAINING COURSE SUMMARIES

Los Alamos National Laboratory

RD&D PERMIT

Subject: General Employee Training (GET)

Relevant Compliance Requirements	DOE 5480.10, DOE 5480.11, DOE 5480.20, and LP 106-01.0
Description	GET consists of the following fifteen training modules. Facilities (5974) Policies (5975) Quality Assurance (5976) Security (5977) Safeguard Awareness (5711) ES&H Policy (5542) Employee Participation Packet (4459) OSHA Rights and Regulations (5543) Industrial Safety (5540) Fire Protection (5224) Emergency Management (5544) Industrial Hygiene (5545) Occupational Medicine (5546) Radiation Protection for the Occupational Worker (5547) Lockout/Tagout (5541) Environment (5548)
Audience	All new employees, contractors, affiliates, long-term visitors, and co-op students.
Prerequisites	None
Retraining	Radiation Protection for the Occupational Worker (5547): every two years OSHA Rights and Regulations (5543): yearly Lockout/Tagout (5541): every two years
Length	8 hours
Frequency	Every Monday and Tuesday as part of the hiring process
Contact	HS-3, 7-0059, K479

Subject: **Health**
Course: **Introduction to Hazard Communication**

Course Number: 2398

Relevant Compliance Requirements	ARs 1-4, 1-9, 2-1, 6-1, 6-2, 6-3, 6-4, 6-5, 6-6, 6-7, 6-8, 6-9, 8-1, 8-3, and 12-1
Description	Provides information about requirements of the Hazard Communication Standard and its application at the Laboratory; includes detailed discussion of employee's right to know, labeling requirements, and Material Safety Data Sheets (MSDSs) and the general principles of hazard recognition, evaluation, and control.
Audience	Required for all new and transferred employees and visitors who work directly with chemicals or who may be routinely exposed to chemicals during the course of their normal work activities.
Prerequisites	None
Retraining	None
Length	2 hours
Frequency	Weekly
Contact	HS-3, 7-0059, K494

Subject: **Environment** Course Number: 4465

Course: **Hazardous Waste Operations: Occasional Site Worker (24 hr)**

Relevant Compliance Requirements	29 CFR 1910.120
Description	Meets OSHA training requirements as described in 29 CFR 1910.120. Topics include regulations, rights and responsibilities of workers, nature of hazards, toxicology, industrial hygiene, monitoring methods and equipment, hazard evaluation, storage, handling and labeling, personal protective equipment, engineering controls, decontamination, and emergency response plans. One additional day of field experience under a trained, experienced supervisor is required to complete the training.
Audience	Required for workers who are on the site of a treatment, storage, and disposal (TSD) facility or a solid waste management unit (SWMU) only occasionally for a specific limited task (such as, but not limited to, groundwater monitoring, land surveying, and geophysical surveying) and who are unlikely to be exposed to hazard levels over permissible exposure limits and published exposure limits.
Prerequisite	None
Retraining	8 hours once a year; see Hazardous Waste Operations Refresher (Course 4466)
Length	24 hours
Frequency	As needed
Contact	HS-3, 7-0059, MS K479

Subject: **Environment**
Course: **Hazardous Waste Operations: Refresher**

Course Number: 4466

Relevant Compliance Requirements	None
Description	Meets annual refresher training requirements for anyone who has completed 24- or 40-hour OSHA training as described in 29 CFR 1910.120. Topics include a review of regulations, toxicology, industrial hygiene, monitoring and sampling, and personal protective equipment.
Audience	Required for all employees and supervisors who have taken the Hazardous Waste Operations courses for Occasional or General Site Workers.
Prerequisite	Hazardous Waste Operations: Occasional Site Worker (24 hr, Course 4465) or Hazardous Waste Operations: General Site Worker (40 hr, Course 4464)
Retraining	Yearly
Length	8 hours
Frequency	As needed
Contact	HS-3, 7-0059, MS K479

Subject: **Environment** Course Number: 4419

Course: **Hazardous Waste Generator Training**

Relevant Compliance Requirements	ARs 9-4 and 10-3
Description	Defines hazardous waste and its classifications; describes the federal and state laws and regulations governing hazardous waste, including procedures for handling empty containers, procedures for mixing wastes, and the responsibilities of hazardous waste generators.
Audience	Required for all employees who generate hazardous waste, including spill coordinators and hazardous waste managers.
Prerequisite	None
Retraining	None
Length	2 hours
Frequency	Weekly (module in Extended General Employee Training)
Contact	HS-3, 7-0059, MS K479

Subject: **Health**
Course: **CPR: Adult**

Course Number: 3583

Relevant Compliance Requirements	ARs 1-8, 6-1, 6-8, 6-9, 7-1, 8-1, 8-4, 8-5, and 15-1
Description	Includes artificial ventilation, one-person adult CPR, and choking prevention procedures for adults. Students who successfully complete this course are issued an American Red Cross certification card that is valid for 1 year.
Audience	Suggested for all interested Laboratory employees. Required for employees working hands-on with energized electrical systems (see AR 7-1); CPR requirement may also be fulfilled through successful completion of First Aid: Standard or CPR: Community.
Prerequisites	None
Retraining	Once a year
Length	4 hours for classes of 6 or fewer students; 6 hours for classes of 7 or more students.
Frequency	As needed
Contact	HS-2, 7-7251, D421

Subject: **Health**
Course: **First Aid: Standard**

Course Number: 3574

Relevant Compliance Requirements	ARs 1-8, 6-1, 6-8, 6-9, 7-1, 8-1, 8-4, 8-5, and 15-1
Description	Includes adult one-person artificial ventilation, CPR, and choking prevention procedures; control of bleeding; initial treatment of shock; first aid for burns, fractures, and sprains; poisoning; diabetes; strokes; seizures; hypothermia and hyperthermia; and movement of injured persons. Students who successfully complete this course are issued an American Red Cross certification card for (1) adult CPR valid for 1 year and (2) standard first aid valid for 3 years. Students must complete the entire course to receive either certification.
Audience	Suggested for all interested Laboratory employees, and especially for employees working in remote field locations and/or with chemicals, flammable and combustible liquids, explosives, cryogenic fluids, hazardous gases, energized electrical systems, machine shop equipment, and in areas involving spark- or flame-producing operations and in limited egress/confined spaces (see Relevant Compliance Requirements listed above).
Prerequisites	None
Retraining	Once every 3 years to maintain certification in first aid; Adult CPR is required once every year during intervening years to maintain certification in CPR.
Length	8 hours
Frequency	As needed
Contact	HS-2, 7-7251, D421

Subject: **Safety**
Course: **Electrical Safety Awareness Training**

Course Number: 2377

Relevant Compliance Requirements	ARs 7-1, 8-1, 8-5, and 8-7
Description	Familiarizes students with electrical hazards and their identification, personal protection devices, housekeeping, flexible cables, capacitors, inductors, interlock systems, and administrative requirements for working on electrical equipment.
Audience	Required for electrical, electronic, and electromechanical technicians; electrical and electronic engineers; and experimental scientists utilizing apparatus with high voltages and currents.
Prerequisites	None
Retraining	Once every 3 years
Length	3 hours
Frequency	2 times a month and as needed
Contact	HS-3, 7-0059, K479

Subject: **Safety**
Course: **Pressure Safety: Compressed Gas Systems**

Course Number: 5264

Relevant Compliance Requirements	ARs 6-8, 6-9, and 14-1
Description	Provides a basic understanding of fluid force and pressure relationships and presents the Laboratory requirements for working with intermediate fluid pressures of 150 to 3000 psia.
Audience	Required for all personnel working with fluid pressures over 150 psia.
Prerequisites	Pressure Safety Orientation (Course 769)
Retraining	None
Length	4 hours
Frequency	4 times a year and as needed
Contact	HS-3, 7-0059, K479