LIBRARY COPY

RESOURCE CONSERVATION AND RECOVERY ACT

RESEARCH, DEVELOPMENT AND DEMONSTRATION, PACKED BED REACTOR/SILENT DISCHARGE PLASMA UNIT

APRIL 1994

TEXT OF PERMIT

New Mexico Environment Department
Hazardous and Radioactive Materials Bureau
525 Camino De Los Marquez
P.O Box 26110
Santa Fe, New Mexico, 87502

Permittee: Department of Energy
Los Alamos National Laboratory

Identification Number: **NM0890010515**

Permit Number: **NM0890010515-RDD1**

5167

HAZARDOUS WASTE FACILITY PERMIT

Permittee: Department of Energy
Los Alamos National Laboratory

Identification Number: NM0890010515
Permit Number: NM0890010515-RDD1

Pursuant to the Solid Waste Disposal Act, as amended by the Resource Conservation and Recovery Act (RCRA), as amended (42 U.S.C. 6901, et seq.), and the New Mexico Hazardous Waste Act, Sections 74-4-1 et seq. NMSA 1978), and regulations promulgated thereunder by the New Mexico Environmental Improvement Board (codified and to be codified in the Hazardous Waste Management Regulations [HWMR-7]), a Research, Development and Demonstration Permit is issued to the Department of Energy/Los Alamos National Laboratory (hereafter called the Permittee), to operate a hazardous waste treatment unit consisting of a combined **Packed-Bed Reactor/Silent Discharge Plasma Treatment Unit** and an ancillary storage unit, all located southwest of Los Alamos, New Mexico, in Technical Area 35, Building 128, at latitude 35.8624 and longitude -106.2945.

The Permittee must comply with all terms and conditions of this Permit. This Permit consists of the conditions herein (including those in any attachments) and the applicable regulations contained in the HWMR-7, as specified in the Permit. Applicable regulations are those which are in effect on the date of issuance of the Permit, in accordance with HWMR-7.

This Permit is based on the assumption that the information submitted in the Part B Permit Application and the administrative record is accurate and that the unit will be constructed and operated as specified in the Application, and the administrative record.

Any inaccuracies found in the submitted information may be grounds for the termination, revocation and reissuance, or modification of this Permit in accordance with HWMR-7, Part IX, 40 CFR §270.41, §270.42, and §270.43 and for enforcement action. The Permittee must inform NMED of any deviation from or changes in the information in the application which would affect the Permittee's ability to comply with the applicable regulations or permit conditions.

This Permit is effective as of the date of signature by the Secretary and shall remain in effect for one (1) year unless revoked and reissued under HWMR-7, Part IX, 40 CFR §270.41 or, terminated under HWMR-7, Part IX, 40 CFR §270.43 or §270.65, or continued in accordance with HWMR-7, Part IX, 40 CFR §270.51(a) and/or §270.65.

Signed this 21 day of April, 1994

by Judith M. Espinosa
Judith M. Espinosa, Secretary
New Mexico Environment Department

NMED REPLY TO PUBLIC COMMENTS RECEIVED ON THE U.S. DEPARTMENT OF ENERGY/LOS ALAMOS NATIONAL LABORATORY RESEARCH, DEVELOPMENT AND DEMONSTRATION PACKED-BED REACTOR/SILENT DISCHARGE PLASMA UNIT DRAFT PERMIT

Comment Period Ran from November 29, 1993 to January 14, 1994.

List of Commentors	Comment #	Page
Ms. Victoria S. Parrill	1&2	1
Mr. Thomas S. Sanford	3	1
U.S. EPA	4-6	2
NMED Air Quality Bureau	7	4

Response to Public comments on the draft Research, Development and Demonstration (RD&D) Packed-Bed Reactor/ Silent Discharge Plasma (PBR/SDP) Hazardous Waste Permit for the Department of Energy/Los Alamos National Laboratory(DOE/LANL).

PUBLIC COMMENTS:

Comment 1

"Before approval may be given, the DOE must produce a full environmental impact statement...."

HRMB Response:

Environmental Impact Statements (EIS) are a requirement of the National Environmental Policy Act (NEPA). Getting a permit is not subject to NEPA. DOE/LANL produces EISs under NEPA for the whole LANL environment which includes the subject PBR/SDP unit. DOE/LANL plans to continue to produce EISs for the entire LANL area as opposed to the current pilot-scale RD&D experiment.

Comment 2

"Before approval may be given, the DOE must produce a full impact statement <u>and hold a public hearing to receive and to respond to public concerns.</u>"

HRMB Response:

NMED has decided not to hold a public hearing since the commenter withdrew her request for a public hearing. That request followed a public meeting that was held on March 11, 1994. The purpose of the public meeting was an attempt to resolve the issues regarding the subject draft Permits by giving the commenter a chance to express her concerns to DOE/LANL, and NMED in accordance with New Mexico Hazardous Waste Management Regulations (HWMR-7), Section 902, paragraph A.4.

The public meeting lasted two hours (from 9:30 am to 11:30 am). This included two presentations by DOE/LANL researchers on the planned PBR/SDP and Hydrothermal Processing experiments. After asking several questions and receiving answers to those questions by the researchers, the commenter said that she was impressed with the presentations and answers to her questions and the purpose of the said experiments. She added that she was withdrawing her request for a public hearing. The commenter was then asked by the HRMB Facilitator of the meeting to put down in writing, and submit to HRMB, her decision to withdraw her request for a public hearing. The public commenter agreed to write HRMB a letter to that effect.

An excerpt from the commenter's letter to HRMB, which was received on March 15, 1994 reads as follows:

"The meeting this morning at which representatives from Los Alamos Labs, Department of Energy and the NMED has answered my concerns regarding the one year permits requested for the two RD&D projects we discussed. I withdraw my request for a public hearing on the matter."

Comment 3

"I believe that research with such a unit is long overdue.... I therefore strongly support the issuance of a permit for this experiment."

HRMB Response:

NMED appreciates the commenter's contribution in effort and the time taken to review the PBR/SDP draft permit.

COMMENTS FROM U.S. ENVIRONMENTAL PROTECTION AGENCY (EPA):

Comment 4

1. "Upon completion of this Research, Development and Demonstration (RD&D) project should Los Alamos National Laboratory decide to permit a permanent PBR/SDP unit it will need to be permitted as an incinerator under 40 CFR 264 Subpart O and should also meet the requirememnts of EPA's Combustion Strategy.

2. In addition, the permit regulatory limits in Subpart O need to include, but are not limited to the following items:

   a. What parameters need to be measured to ensure that the waste feed cuts off if the unit is not operating within specifications?

   b. The amount and type of anticipated emissions need to be defined. How will LANL know when complete combustion has occurred. These parameters need to be defined".

HRMB Response to #1.:

NMED supports EPA's comment 1., and will add the above suggestion, verbatim, to Module I as Permit Condition I.B.3.

I.B.3. **Upon completion of this Research, Development and Demonstration (RD&D) project should Los Alamos National Laboratory decide to permit a permanent PBR/SDP unit it**

will need to be permitted as an incinerator under 40 CFR 264 Subpart O and should also meet the requirememnts of EPA's Combustion Strategy.

HRMB Response to #2a and 2b.:

The New Mexico Environment Department (NMED) agrees with EPA's suggestion regarding the incinerator. However, as for the current RD&D Permit, the Permittee has submitted a list of the parameters that will be monitored in the part B permit application. The parameters of interest are listed on pages C10(Process Monitors) and C11(Equipment Shutdown) of the PBR/SDP draft Permit.

With reference to the "...amount and type of anticipated emissions...", the following Permit Condition, has been added to Module II:

II.I.8. **The Permittee shall state the amount and type of anticipated emissions from the PBR/SDP unit when conducting incineration of the hazardous waste in future. This shall be preceded by permit modification as stated in Module I, Permit Condition B. The Permittee shall also demonstrate how it will be known when complete combustion has occurred, including a definition of the parameters concerned during operation of the PBR/SDP unit.**

Comment 5

Attachment A, Page A3, Indented paragraph:

"On page A3, the indented paragraph on monitoring indicates that monitoring could be operated continuously during the RD&D experiments, but it may not be necessary. Monitoring should be continuous or else there is no way to determine if the process is stable or not. EPA is concerned that if monitoring is not continuous then the waste material is being burned for destruction purposes and not RD&D".

HRMB Response:

NMED agrees with the observation by EPA, consequently, the verbage of the indented paragraph on page A3 has been changed to read as highlighted, while the redundant sentence that has been omitted is struck out as follows:

- "The GC and FTIR spectrometer ~~may~~ shall be operated continuously during the RD&D experiments to monitor the stability of the treatment process. ~~It is anticipated~~

~~that the process will be stable and that continuous monitoring may not be necessary.~~ The other diagnostic equipment (i.e., GCA, IR spectrophotometer, mass spectrophotometer, and ultraviolet absorption cell) may be available to provide supplemental data. Figure 9 and Figure 10 show the diagnostic equipment monitoring points that may be used during RD&D experiments. Sampling points will be selected based on the data that is to be collected during a particular experiment. Attachment I describes the research-specific diagnostic equipment performance in further detail.

In addition, the following Permit Condition, printed in bold, has been added to Module II:

II.I.2. The Permittee shall continuously monitor the RD&D process.

Comment 6

"There are two typos on page C2, second paragraph, sentences 3 and 5 do not start with capital letters".

"On page C8, under the section entitled,"Objective, paragraph three indicates that the wastes in storage at LANL are described in Attachment 11. There is no Attachment 11 in the permit".

HRMB Response:

Sentence 3 on page C2 has now been corrected to read as highlighted, with the original words struck out as follows: " Oxidizer ~~oxidizer~~ gas will be either air or a mixture of 20% Oxygen and 80% Argon".

Sentence 5 on page C2 has been corrected and now reads as highlighted: "In ~~in~~ addition, by staying fuel lean it is possible to prevent the production of a flame."

The sentence in question on page C8 has been corrected, and shall now read as highlighted, i.e.: "The wastes in storage at LANL are described in permit ~~Attachment 11~~ Attachment 1".

COMMENT FROM NMED AIR QUALITY BUREAU(AQB)

Comment 7

".... Please note, an air quality permit may be required for this experimental source if any of the following are applicable:

1) the emission rate of any one regulated air pollutant

(nitrogen oxides, carbon monoxide, non-methane hydrocarbons, total suspended particulate, sulfur dioxide) is greater than 10 pounds per hour or 25 tons per year, or

2) the emission rate of lead is greater than 5 tons per year, or

3) any toxic air pollutant listed in AQCR 702, Part Three Appendix A which exceeds the corresponding emission rate shown in pounds per hour".

HRMB Response:

HRMB agrees with this comment, but will not modify any permit condition for the following reason:

Based on data submitted by DOE/LANL to the AQB, (at the request of AQB) and the conclusion drawn by AQB on January 25, 1994 based on that data, that "... this source will not require permitting under AQCR 702"., NMED has determined that DOE/LANL does not need to obtain an Air Quality Permit for the PBR/SDP unit, but any future modification of or at the unit by DOE/LANL remains subject to permit Condition B.

TABLE OF CONTENTS

MODULE I General Permit Conditions

Permit Condition	Subject	Regulation (HWMR-7)	Page
I.A	Effect of Permit	Part IX, §270.4 §270.30(g)	I-1
I.B.	Permit Actions	Part IX, §270.4(a) §270.30	I-1
I.C.	Severability	Part IX	I-2
I.D	Definitions		I-2
I.E	Duties and Requirements		I-2
I.E.1	Duty to Comply	Part IX, §270.30(a)	I-2
I.E.2	Duty to Reapply	Part IX, §270.10(h) §270.30(b)	I-3
I.E.3	Permit Expiration	Part IX, §270.65	I-3
I.E.4	Need to Halt or Reduce Activity Not a Defense	Part IX, §270.30(c)	I-3
I.E.5	Duty to Mitigate	Part IX, §270.30(d)	I-3
I.E.6	Proper Operation and Maintenance	Part IX, §270.30(e)	I-3
I.E.7	Duty to Provide Information	Part V, §264.74(a) Part IX, §270.30(h)	I-4
I.E.8	Inspection and Entry	Part IX, §270.30(i	I-4
I.E.9	Monitoring and Records	Part V, §264.74(b) Part IX, §270.30(j)	I-5
I.E.10	Reporting Planned Changes	Part IX, §270.30(l)	I-6
I.E.11	Reporting Anticipated Noncompliance	Part IX, §270.30(l)	I-6

Permit Condition	Subject	Regulation (HWMR-7)	Page
I.E.12	Certification of Construction or Modification	Part IX, §270.30(l)	I-6
I.E.13	Transfer of Permits	Part V, §264.12(c) Part IX, §270.30(l)	I-6
I.E.14	Twenty-Four Hour Reporting	Part IX, §270.30(l)	I-7
I.E.15	Other Information	Part IX, §270.30(l)	I-8
I.F	Signatory Requirement	Part IX, §270.11 §270.30(k)	I-8
I.G	Reports, Notifications, and Submissions to the Secretary		I-8
I.H	Confidential Information	Part IX, §270.12	I-8
I.I	Documents to be Maintained at the Facility	Part V, §264	I-8
I.J	Permit Construction	Part IX, §270	I-9
MODULE II	**General Facility Conditions**		
II.A	Design and Operation of Facility	Part V, §264.31	II-1
II.B	Required Notices	Part IX, §264.12	II-1
II.C	General Waste Analysis	Part V, §264.13	II-1
II.D	Security	Part V, 264.14	II-2
II.E	General Inspection Plan	Part V, §264.15	II-2
II.F	Personnel Training	Part V, §264.16	II-2
II.G	Special Provisions for Ignitable, Reactive, or Incompatible Waste	Part V, §264.17	II-2
II.H	Location Standards	Part V, §264.18	II-2
II.I	Preparedness and Prevention	Part V, §264.30-37	II-2

Permit Condition	Subject	Regulation (HWMR-7)	Page
II.J	Contingency Plan	Part V, §264.50-55	II-3
II.K	Manifest System	Part V, §264.71	II-4
II.L	Recordkeeping and Reporting	Part V, §264.73 Part V, §264.75	II-4
II.M	General Closure Requirements	Part V, §264.111-13	II-4

PERMIT ATTACHMENTS

Permit Attachment	Attachment Title	Page
A	Waste Analysis Plan	A1-22
B	Design Plan	B1-6
C	Standard Operating Procedures and Research Plan	C1-13
D	Security and Safety Plan	D1-6
E	Inspection Plan	E1-3
F	Inspection Schedule	F1-2
G	Personnel Training Outline	G1-20
H	Procedures for Handling Ignitable, Reactive or Incompatible Waste	H1-16
I	Required Equipment	I1-3
J	Contingency Plan:	
	Table of Contents	i
	List of Tables	ii
	List of Figures	ii
	List of Acronyms	iii
	Contingency Plan	J1-23
K	Closure Plan	K1-4
L	Waste Profile	L1-18
M	FIGURES	F1-10

LIST OF FIGURES

		Page
Figure 1	Site Map	F1
Figure 2	RD&D Unit Key Map	F2
Figure 3	Location Map	F3
Figure 4	Layout of Building 128	F4
Figure 5	Topographic Map	F5
Figure 6	Location of RD&D Units Relative to Nearby Fault Traces	F6
Figure 7	Packed-Bed Reactor	F7
Figure 8	Cross-section of Silent Discharge Plasma Unit	F8
Figure 9	Packed-Bed Reactor/Silent Discharge Plasma RD&D Unit: Open-Loop Configuration	F9
Figure 10	Packed-Bed Reactor/Silent Discharge Plasma RD&D Unit: Closed-Loop Configuration	F10

LIST OF ACRONYMS

CFR	Code of Federal Regulations
CGA	Combustion Gas analyzer
CO_2	Carbon Dioxide
DOE	U.S.Department of Energy
EPA	U.S. Environmental Protection Agency
GC	Gas Chromatography
H_2O	Hydrogen Oxide (Water)
HWMR	State of New mexico Hazardous Waste Management Regulations
ICP	Inductively Coupled Plasma
IR	Infra Red
LANL	Los Alamos National Laboratory
MSDS	Material Safety Data Sheet
NMED	New Mexico Environment Department
O_2	Oxygen
O^3	Ozone
PBR	Packed Bed Reactor
ppm	Parts Per Million
QA/QC	Quality Assurance/Quality Control
RCRA	Resource Conservation and Recovery Act
RD&D	Research Development and Demonstration
SDP	Silent Discharge Plasma
SOP	Standard Operating Procedures

MODULE I - GENERAL PERMIT CONDITIONS

A. EFFECT OF PERMIT

The Permittee is allowed to store, treat, and dispose on-site hazardous waste in accordance with the conditions of this Permit. Any storage, treatment and disposal of hazardous waste requiring a permit under the New Mexico Hazardous Waste Regulations HWMR-7, Part V and not specifically authorized in this Permit is prohibited. Subject to HWMR-7, Part IX, § 270.4, compliance with this Permit generally constitutes compliance, for purposes of enforcement, with the New Mexico Hazardous Waste Act (§§ 74-4-1 et seq. NMSA 1978) and HWMR-7, Parts I,II, III, and IV to the extent the requirement of those Parts are applicable. The Permittee must also comply with all applicable self-implementing provisions imposed by the Resource Conservation and Recovery Act (RCRA) or HWMR-7, Part VIII. A complete (RCRA) permit consists of this Permit and a U.S. EPA Permit issued under the provisions of the Hazardous and Solid Waste Amendment of 1984 (HSWA) which addresses the portion of the RCRA program for which the State is not authorized. Issuance of this Permit does not convey any property rights of any sort or any exclusive privilege; nor does it authorize any injury to persons or property, any invasion of other private rights, or any infringement of state or local laws or regulations. Compliance with the terms of this Permit does not constitute a defense to any order issued or any action brought under Sections 3008(a), 3008(h), 3013, or 7003 of RCRA; Sections 106(a), 104 or 107 of the Comprehensive Environmental Response, Compensation, and Liability Act of 1980 (42 U.S.C. 9601 et seq., commonly known as CERCLA), or any other law providing for protection of public health or the environment. [HWMR-7, Part IX, §§ 270.4 and 270.30(g)]

B. PERMIT ACTIONS

B.1. Permit Modification, Revocation and Reissuance, and Termination

This Permit may be modified, revoked and reissued, or terminated for cause, as specified in HWMR-7, Part IX, §§ 270.41, 270.42, and 270.43. The filing of a request for a permit modification, revocation and reissuance, or termination, or the notification of planned changes or anticipated noncompliance on the part of the Permittee, does not stay the applicability or enforceability of any permit condition. [HWMR-7, Part IX, §§ 270.4(a) and 270.30(f)].

B.2. Permit Renewal

This Permit may be renewed as specified in HWMR-7, Part IX, §270.30(b) and Permit Condition E.2. Review of any application for a Permit renewal shall consider improvements in the state of control and measurement technology, as well as changes in applicable regulations. [HWMR-7, §270.30(b).

B.3. Upon completion of this Research, Development and Demonstration (RD&D) project should Los Alamos National Laboratory decide to permit a permanent PBR/SDP unit it will need to be permitted as an incinerator under 40 CFR, §264 Subpart O and should also meet the requirements of EPA's Combustion Strategy.

B.4. During Permit modification to incinerate the hazardous waste in question, the Permittee must state what parameters need to be measured to ensure that the waste feed cuts off automatically if the unit is not operating within specifications.
The above requirements are in compliance with HWMR-7, Part V, §264 Subpart O.

C. SEVERABILITY

The provisions of this Permit are severable, and if any provision of this Permit, or the application of any provision of this Permit to any circumstance is held invalid, the application of such provision to other circumstances and the remainder of this Permit shall not be affected thereby.

D. DEFINITIONS

For purposes of this Permit, terms used herein are defined for each module. Terms found in Module I shall have the same meaning as those in HWMR-7 Part I, §260.10, unless this Permit specifically provides otherwise. Terms found in Module II shall have the meaning defined in HWMR-7, Part I, §260.10, unless the Permit specifically provides otherwise. Where terms are not defined in the regulations or the Permit, the meaning associated with such terms shall be defined by a standard dictionary reference or the generally accepted scientific or industrial meaning of the term. "Secretary" means the Secretary of the New Mexico Environment Department (NMED), a designee or authorized representative. "Regional Administrator" means the Regional Administrator of the U.S. Environmental Protection Agency (U.S. EPA), Region 6, a designee or authorized representative. "Permittee" means Los Alamos National Laboratory, Los Alamos, New

Mexico, EPA I.D. Number NM0890010515.

E. DUTIES AND REQUIREMENTS

E.1. Duty to Comply

The Permittee shall comply with all conditions of this Permit, except to the extent and for the duration such noncompliance is authorized by an emergency Permit. Any Permit noncompliance, other than noncompliance authorized by an emergency Permit, constitutes a violation of RCRA and is grounds for enforcement action; for Permit termination, revocation and reissuance, or modification; or for denial of a Permit renewal application. [HWMR-7, Part IX, §270.30(a)]

E.2. Duty to Reapply

If the Permittee wishes to continue an activity allowed by this Permit after the expiration date of this Permit, the Permittee shall submit a complete application for a new Permit at least 180 days prior to Permit expiration. [HWMR-7, Part IX, §§270.10(h), 270.30(b)].

E.3. Permit Expiration

Pursuant to HWMR-7, Part IX, §270.65, this Permit shall be effective for a fixed term not to exceed one year. This permit may be renewed not more than three times. Each renewal shall be for a period of not more than one year. This Permit and all conditions herein will remain in effect beyond the Permit's expiration date, if the Permittee has submitted a timely, complete application (see HWMR-7, Part IX, §§270.10, 270.13 through 270.29) and, through no fault of the Permittee, the Secretary has not issued a new Permit (HWMR-7, Part IX, §270.51).

E.4. Need to Halt or Reduce Activity Not a Defense

It shall not be a defense for the Permittee, in an enforcement action that it would have been necessary, to halt or reduce the Permitted activity in order to maintain compliance with the conditions of this Permit [HWMR-7, Part IX, §270.30(c)].

E.5. Duty to Mitigate

In the event of noncompliance with this Permit, the Permittee shall take all reasonable steps to minimize releases to the environment and shall carry out such measures, as are reasonable, to prevent significant adverse impacts on human health or the environment. [HWMR-7, Part IX, § 270.30(d)]

E.6. Proper Operation and Maintenance

The Permittee shall at all times properly operate and maintain all facilities and systems of treatment and control (and related appurtenances) which are installed or used by the Permittee to achieve compliance with the conditions of this Permit. Proper operation and maintenance includes effective performance, adequate funding, adequate operator staffing and training, and adequate laboratory and process controls, including appropriate quality assurance/quality control procedures. This provision requires the operation of back-up or auxiliary facilities or similar systems only when necessary to achieve compliance with the conditions of this Permit [HWMR-7, Part IX, §270.30(e)].

E.7. Duty to Provide Information

The Permittee shall furnish to the Secretary, within a reasonable time, any relevant information which the Secretary may request to determine whether cause exists for modifying, revoking and reissuing, or terminating this Permit, or to determine compliance with this Permit. The Permittee shall also furnish to the Secretary, upon request, copies of records required to be kept by this Permit [HWMR-7, Part V, §264.74(a), and Part IX, §270.30(h)].

E.8. Inspection and Entry

Pursuant to HWMR-7, Part IX, §270.30(i), the Permittee shall allow the Secretary, or an authorized representative, upon the presentation of credentials and other documents, as may be required by law, inspection and entry privileges authorized by Permit Conditions from E.8.a. through E.8.d.

E.8.a. Enter at reasonable times upon the

Permittee's premises where a regulated facility or activity is located or conducted, or where records must be kept under the conditions of this Permit;

E.8.b. Have access to and copy, at reasonable times, any records that must be kept under the conditions of this Permit;

E.8.c. Inspect at reasonable times any facilities, equipment (including monitoring and control equipment), practices, or operations regulated or required under this Permit.

E.8.d. Sample or monitor, at reasonable times, for the purposes of assuring Permit compliance or as otherwise authorized by RCRA, any substances or parameters at any location. The Permittee shall be provided the opportunity to obtain split or duplicate samples.

E.9. Monitoring and Records

E.9.a. Samples and measurements taken for the purpose of monitoring shall be representative of the monitored activity. The method used to obtain a representative sample of the waste to be analyzed must be described in Permit Attachment A, the Waste Analysis Plan or be approved by the Secretary. Analytical methods must be those specified in Test Methods for Evaluating Solid Waste: Physical/Chemical Methods SW-846, Standard Methods of Wastewater Analysis, or an equivalent method, as specified in Permit Attachment A or approved by the Secretary [HWMR-7, Part IX, §270.30(j)(1)].

E.9.b. The Permittee shall retain records of all monitoring information, including all calibration and maintenance records and all original strip chart recordings for continuous monitoring instrumentation, copies of all reports and records required by this Permit, the certification required by HWMR-7, Part IX, §264.73(b)(9), and records of all data used to complete the application for this Permit for a period of at least 3 years from the date of the sample, measurement, report, record, certification, or application. These periods may be extended

by request of the Secretary at any time and are automatically extended during the course of any unresolved enforcement action regarding this facility. [HWMR-7, Part IX, §270.30(j)(2)].

E.9.c. Pursuant to HWMR-7, Part IX, §270.30(j)(3), records of monitoring information shall specify:

i. The dates, exact place, and times of sampling or measurements;

ii. The individuals who performed the sampling or measurements;

iii. The dates analyses were performed;

iv. The individuals who performed the analyses;

v. The analytical techniques or methods used; and

vi. The results of such analyses.

E.10. Reporting Planned Changes

The Permittee shall give notice to the Secretary, as soon as possible, of any planned physical alterations or additions to the Permitted facility. [HWMR-7, Part IX, §270.30(l)(1)].

E.11. Reporting Anticipated Noncompliance

The Permittee shall give advance notice to the Secretary of any planned physical changes in the permitted facility or activity which may result in noncompliance with permit requirements. [HWMR-7, Part IX, §270.30(l)(2)].

E.12. Certification of Construction or Modification

The Permittee may not commence treatment, storage, or disposal of hazardous waste at the facility until the Permittee has submitted to the Secretary, by certified mail or hand delivery, a letter signed by the Permittee and a registered professional engineer stating that the facility has been constructed or modified in compliance with the Permit; and

E.12.a. The Secretary has inspected the modified or newly constructed facility and finds it is in compliance with the conditions of the Permit; or

E.12.b. The Secretary has either waived the inspection or has not within 15 days notified the Permittee of his intent to inspect. [HWMR-7, Part IX, §270.30(l)(2)].

E.13. Transfer of Permits

This Permit is not transferable to any person, except after notice to the Secretary. The Secretary may require modification or revocation and reissuance of the Permit pursuant to HWMR-7, Part IX, §270.40. Before transferring ownership or operation of the facility during its operating life, the Permittee shall notify the new owner or operator in writing in accordance with the requirements of HWMR-7, Part IX, §270.30(l)(3), and Part V, §264.12(c).

E.14. Twenty-Four Hour and Subsequent Reporting

E.14.a. The Permittee shall report to the Secretary any noncompliance which may endanger health or the environment. Any such information shall be reported orally within 24 hours from the time the Permittee becomes aware of the circumstances. The report shall include the following:

i. Information concerning release of any hazardous waste that may cause an endangerment to public drinking water supplies.

ii. Any information of a release or discharge of hazardous waste, of a fire or explosion from the hazardous waste management facility which could threaten the environment or human health outside the hazardous waste management unit.

E.14.b. The description of the occurrence and its cause shall include:

i. Name, address, and telephone number of the owner or operator;

ii. Name, address, and telephone number of

the facility;

iii. Date, time, and type of incident;

iv. Name and quantity of materials involved;

v. The extent of injuries, if any;

vi. An assessment of actual or potential hazards to the environment and human health outside the facility, where this is applicable; and

vii. Estimated quantity and disposition of recovered material that resulted from the incident.

E.14.c. A written submission shall also be provided within five days of the time the Permittee becomes aware of the circumstances. The written submission shall contain a description of the noncompliance and its cause; the period(s) of the occurrence including exact dates and times; and, if the noncompliance has not been corrected; the anticipated time it is expected to continue; and steps taken or planned to reduce, eliminate, and prevent recurrence of the noncompliance. The Secretary may waive the five-day written notice requirement in favor of a written report within 15 days. [HWMR-7, Part IX, §270.30(l)(6)].

E.14.d. If the Contingency Plan is implemented, the Permittee must comply with the reporting requirements listed in the Contingency Plan.

E.15. Other Information

Whenever the Permittee becomes aware that it failed to submit any relevant facts in the Permit application, or submitted incorrect information in a Permit application or in any report to the Secretary, the Permittee shall promptly submit such facts or information. [HWMR-7, Part IX, §270.30(l)(11)].

F. SIGNATORY REQUIREMENT

All applications, reports, or information submitted to or requested by the Secretary, a designee, or authorized representative, shall be signed and certified in accordance with

HWMR-7, Part IX, §270.11 and 270.30(k).

G. REPORTS, NOTIFICATIONS, AND SUBMISSIONS TO THE SECRETARY

All reports, notifications, or other submissions which are required by this Permit to be sent or given to the Secretary should be sent by certified mail or given to:

Hazardous and Radioactive Materials Bureau, Chief
New Mexico Environment Department
525 Camino de Los Marquez
P.O. Box 26110
Santa Fe, New Mexico 87502

H. CONFIDENTIAL INFORMATION

In accordance with HWMR-7, Part IX, §270.12, the Permittee may claim confidential any information required to be submitted by this Permit.

I. DOCUMENTS TO BE MAINTAINED AT THE FACILITY

The Permittee shall maintain at the facility, until closure is completed and certified by an independent, registered professional engineer, the following documents and all amendments, revisions and modifications to these documents:

1. Waste Analysis Plan, as required by HWMR-7, Part IX, §264.13 and this Permit.

2. Inspection schedules, as required by HWMR-7, Part IX, §264.15(b)(2) and this Permit.

3. Personnel training documents and records, as required by HWMR-7, Part IX, §264.16(d) and this Permit.

4. Contingency Plan, as required by HWMR-7, Part IX, §264.53(a) and this Permit.

5. Operating record, as required by HWMR-7, Part IX, §264.73 and this Permit.

6. Closure Plan, as required by HWMR-7, Part IX, §264.112(a) and this Permit.

J. PERMIT CONSTRUCTION

J.1. Citations

Whenever paragraphs of this Permit or of the Hazardous Waste Regulations are cited, such citations include all subordinate sections of the

cited paragraph. When subordinate sections are cited, such citations include all subsections of the cited paragraphs. All such citations shall be considered an inclusion by reference to this Permit in accordance with HWMR-7, Part IX.

J.2. Gender

Whenever the pronoun "he" is used in reference to the Secretary of the New Mexico Environment Department or the Permittee, it is to be read as "she" in any instance where the person of the reference is female.

MODULE II - GENERAL FACILITY CONDITIONS

A. DESIGN AND OPERATION OF FACILITY

The Permittee shall construct, maintain and operate the facility to minimize the possibility of a fire, explosion, or any unplanned, sudden or nonsudden release of hazardous waste constituents to air, soil, or surface water which could threaten human health or the environment, as required by HWMR-7, Part V, § 264.31.

B. REQUIRED NOTICES

B.1. Hazardous Waste Imports

This permit does not allow the Permittee to accept wastes from a foreign source. If the Permittee is to receive hazardous waste from a foreign source, he shall apply and receive a permit modification in accordance with HWMR-7, Part IX, §240.41 or § 240.42 prior to accepting such waste.

B.2. Hazardous Waste from Off-Site Sources

"Off-site source" refers to wastes generated by sources other than the Permittee or its contractor(s) operating on-site. When the permittee is to receive hazardous waste from an off-site source (except when the Permittee is also the generator), he must inform the generator in writing that he has the appropriate Permits, and will accept the waste the generator is shipping. The Permittee must keep a copy of this written notice as part of the operating record. [HWMR-7, Part V, §264.12(b)].

C. GENERAL WASTE ANALYSIS

The Permittee shall follow the waste analysis procedures required by HWMR-7, Part V, §264.13, as described in Permit Attachment A. Knowledge of process will not be accepted in lieu of analysis.

The Permittee shall verify the analysis of each waste stream annually as part of its quality assurance program, in accordance with Test Methods for Evaluating Solid Waste: Physical/Chemical Methods, EPA Publication SW-846, or equivalent methods approved by the Secretary of the New Mexico Environment Department (NMED). At a minimum, the Permittee shall maintain proper functional instruments, use EPA approved sampling and analytical methods, verify the validity of sampling and analytical procedures, and perform correct calculations. If the Permittee uses a contract laboratory to perform analyses, then the Permittee shall inform the

laboratory in writing that it must operate under the waste analysis conditions set forth in this Permit.

D. SECURITY

The Permittee shall comply with the security provisions of HWMR-7, Part V, §264.14(b)(2); HWMR-7, Part V, §264.14(c) as presented in Permit Attachment D.

E. GENERAL INSPECTION REQUIREMENTS

The Permittee shall follow the inspection schedule set out in Permit Attachment F. The Permittee shall remedy any deterioration or malfunction discovered by an inspection, as required by HWMR-7, Part V, §264.15(c). Records of inspection shall be kept, as required by HWMR-7, Part V, §264.15(d).

F. PERSONNEL TRAINING

The Permittee shall conduct personnel training, as required by HWMR-7, Part V, §264.16. This training program shall follow the attached outline, Permit Attachment G. The Permittee shall maintain training documents and records, as required by HWMR-7, Part V, §264.16(d) and (e).

G. SPECIAL PROVISIONS FOR IGNITABLE, REACTIVE, OR INCOMPATIBLE WASTE

The Permittee shall comply with the requirements of HWMR-7, Part V, §264.17(a). The Permittee shall follow the procedures for handling ignitable, reactive, and incompatible wastes set forth in Permit Attachment H.

H. LOCATION STANDARDS

Since the RD&D facility has been shown to be located outside the 100 years flood plain, the Permittee must provide seismic, geological, and structural information on the location of the subject facility as required in HWMR-7, Part V, §264.18(a).

A brief synopsis of the Seismic considerations of the current, already existing facility has been provided in Permit Attachment E (i.e. Inspection Plan).

I. PREPAREDNESS AND PREVENTION

I.1. Required Equipment

At a minimum, the Permittee shall maintain at the facility the equipment set forth in Attachment I (Required Equipment and Diagnostic Equipment), according to the requirements of HWMR-7, Part V,

§264.32.

I.2. Testing and Maintenance of Equipment

The Permittee shall continuously monitor the RD&D process. The Permittee shall also test and maintain the equipment specified in Permit Condition I.1, as necessary, to assure its proper operation in time of emergency, as required by §264.33.

I.3. Access to Communications or Alarm System

The Permittee shall maintain access to the communications or alarm system, as required by HWMR-7, Part V, §264.34.

I.4. Required Aisle Space

At a minimum, the Permittee shall maintain aisle space, as described in Attachments D and E in compliance with HWMR-7, Part V, §264.35.

I.5. Arrangements with Local Authorities

The Permittee shall maintain arrangements with state and local authorities, as required by HWMR-7 Part V, §264.37. If state or local officials refuse to enter into preparedness and prevention arrangements with the Permittee, the Permittee must document this refusal in the operating record.

I.6. The Permittee will maintain, in an accessible location, a current inventory showing type, location, and quantity of all hazardous materials and hazardous waste in storage.

I.7. Air Quality Standards

The Permittee shall conduct Air Quality monitoring activity as well as specific equipment and valve monitoring as per HWMR-7, Part V, §264, Subpart BB. An outline of this activity is presented in Permit Attachment E (Inspection Plan).

I.8. The Permittee shall state the amount and type of anticipated emissions from the PBR/SDP unit when conducting incineration of the hazardous waste in future. This shall be preceded by permit Modification as stated in Module I, Permit Condition B. The Permittee shall also demonstrate how it will be known when complete combustion has

occurred, including a definition of the parameters concerned during operation of the PBR/SDP unit.

J. CONTINGENCY PLAN

J.1. Implementation of Plan

The Permittee shall immediately carry out the provisions of the Contingency Plan, Permit Attachment J, whenever there is a fire, explosion, or release of hazardous waste or constituents which could threaten human health or the environment.

J.2. Copies of Plan

The Permittee shall maintain and distribute copies of the Contingency Plan in accordance with the requirements of HWMR-7, Part V, §264.53.

J.3. Amendments to Plan

The Permittee shall review and immediately amend, if necessary, the Contingency Plan, as required by §264.54.

J.4. Emergency Coordinator

A trained emergency coordinator shall be available at all times in case of an emergency, as required by HWMR-7, Part V, §264.55.

K. MANIFEST SYSTEM

The Permittee shall comply with the manifest requirements of HWMR-7, Part V, §§264.71, 264.72, and 264.76.

L. RECORDKEEPING AND REPORTING

In addition to the recordkeeping and reporting requirements specified elsewhere in this Permit, the Permittee shall do the following:

L.1. Operating Record

The Permittee shall maintain a written operating record at the facility, in accordance with HWMR-7, Part V, §264.73.

L.2. Biennial Report

The Permittee shall comply with the biennial

reporting requirements of HWMR-7, Part V, §264.75.

M. GENERAL CLOSURE REQUIREMENTS

M.1. Performance Standard

The Permittee shall close the facility, as required by HWMR-7, Part V, §264.111 and in accordance with the Closure Plan, Permit Attachment K.

M.2. Amendment to Closure Plan

The Permittee shall amend the Closure Plan, in accordance with HWMR-7, Part V, §264.112(c), whenever necessary.

M.3. Notification of Closure

The Permittee shall notify the Secretary in writing at least 60 days prior to the date on which he expects to begin closure of the facility or final closure of the facility, as required by HWMR-7, Part V, §264.112(d).

M.4. Time Allowed For Closure

After receiving the final volume of hazardous waste, the Permittee shall treat, remove from the unit or facility, or dispose of on site all hazardous waste and shall complete closure activities, in accordance with § 264.113 and the schedules specified in the Closure Plan, Permit Attachment K, or as amended by the requirement of Permit Condition M.2.

M.5. Disposal or Decontamination of Equipment, Structures, and Soils

The Permittee shall decontaminate or dispose of all contaminated equipment, structures, and soils, as required by HWMR-7, Part V, §264.114 and the Closure Plan, Permit Attachment K.

M.6. Certification of Closure

The Permittee shall certify that the facility has been closed in accordance with the specifications in the Closure Plan, as required by HWMR-7, Part V, §264.115.

LIST OF PERMIT ATTACHMENTS

Permit Attachment	Attachment Title	Page
A	Waste Analysis Plan	A1-22
B	Design Plan	B1-6
C	Standard Operating Procedures and Research Plan	C1-13
D	Security and Safety Plan	D1-6
E	Inspection Plan	E1-3
F	Inspection Schedule	F1-2
G	Personnel Training Outline	G1-20
H	Procedures for Handling Ignitable, Reactive or Incompatible Waste	H1-16
I	Required Equipment	I1-3
J	Contingency Plan:	
	Table of Contents	i
	List of Tables	ii
	List of Figures	ii
	List of Acronyms	iii
	Contingency Plan	J1-23
K	Closure Plan	K1-4
L	Waste Profile	L1-18
M	FIGURES	F1-10

PERMIT ATTACHMENT A
WASTE ANALYSIS PLAN

Introduction

The following information has been submitted in accordance with the requirements of HWMR-7, Part IX, § 270.14(b)(3). It is the purpose of this plan to provide sufficient physical and chemical data in order to store, treat and dispose of waste in accordance with all Federal and New Mexico State Regulations.

The plan covers those wastes which are hazardous, as defined in HWMR-7, Part II, § 261, and stored in the RD&D ancillary storage unit or treated in the combined Packed-Bed Reactor/Silent Discharge Plasma Waste Treatment Unit. Coordination of all hazardous waste management is provided by LANL's Waste Management Group (EM-7). Determination of the appropriate treatment, storage and/or disposal method for each hazardous waste will be made by this group, utilizing chemical analysis and process knowledge from all waste streams. A description of the various waste streams that may be treated is given in Attachment L.

Generator Supplied Information

Before any waste stream can be placed into the RD&D ancillary storage area at Building 128, the portion of the Facility generating an individual waste stream is required to supply certain information to the environment section. This includes parameters (e.g. TCLP Metals, flash point, pH, specific gravity), and EPA approved Test Methods.

Each generating group shall complete a Chemical Waste Disposal Request form (Form 10-3A Part A) and send the form to the Waste Management Group. The request form shall list the chemical waste the generating group needs to dispose of, the quantity and physical form of the wastes, and other pertinent information such as the condition of the containers. Material Safety Data Sheets (MSDS) and existing analysis data shall also be available and attached.

Each generating group shall supply this information based on past analytical results for the waste stream or a similar waste stream where there is knowledge of the waste generating process. Waste stream samples will be collected and analyzed by EM-7 in cases that the generator cannot supply process knowledge.

Using Part B of the Request Form (Form 10-3A Part B), EM-7 staff can assign a Reactivity Group Number (RGN) to each waste container. The completed request form, container label, MSDS, and analytical data will serve as the waste analysis record for the waste to be stored in the ancillary storage unit.

Updates of generator information are required when:

(1) Change occurs in the process generating the waste;

(2) Change occurs in the materials used in the process generating the waste stream; or

(3) A calendar year has passed since the waste stream information was last updated and reviewed.

Sampling and Waste Analysis Methods:

It is necessary to have an accurate assessment of the waste stream composition, in order to determine the likely decomposition products of the waste undergoing PBR/SDP treatment and to evaluate the effectiveness of the treatment process.

Sampling Methods:

For each waste type treated in the PBR/SDP unit, LANL qualified and trained personnel will collect a sample of the liquid effluent from the acid scrubber wastewater reservoirs. The liquid waste will be collected using EPA approved sampling methods and analyzed in accordance with EPA approved analytical methods. The decision process for waste characterization and analysis and the rationale for selection of the various parameters and test methods will be that outlined in Table A-1, Attachment H.

Test Methods:

Analytical methods shall include EPA Method 7000 series for metals; EPA Method 9070 for oil and grease; EPA Method 8240 for volatile organics; and EPA Method 8270 for semi-volatile organics. Acidic liquid effluent sampling will be performed each time the scrubber waste reservoir is emptied, as scheduled in the Quality Assurance Project Plan (QAPjP) (as provided in Section 5 below), and whenever there is a known change in the relative constituent composition of the treatment system input waste.

Gaseous effluents will be collected as specified by EPA Method 0030 (SLO-VOST) and analyzed by EPA Method 8240 for volatile organic constituents. A complete set of samples, one from each of the four monitoring points shown in Figures 9 and 10, will be collected for analysis as described in the QAPjP presented below.

Additionally, other diagnostic equipment may be used for the research effort. In order to monitor the stability of the system, the gaseous effluent downstream of the PBR and SDP may be analyzed with several on-line diagnostic instruments including: Teledyne Max 5 combustion gas analyzer (CGA), Beckman Acculab 2 IR spectrometer, Perkin Elmer Sigma 2000 Gas Chromatograph (GC)

with both flame ionization and electron capture detector (which allows ppb-detection and sensitivity), UTI Model 100C 0-300 amu mass spectrometer, BIORAD FTIR spectrometer, and ultraviolet absorption cell (or equivalent instruments). These diagnostic instruments provide a means for accurate assessment of gaseous waste stream composition. Analytical methods will be clearly documented and described in the operating record for the RD&D unit.

- The GC and FTIR spectrometer may be operated continuously during the RD&D experiments to monitor the stability of the treatment process. The other diagnostic equipment (i.e., GCA, IR spectrophotometer, mass spectrophotometer, and ultraviolet absorption cell) may be available to provide supplemental data. Figure 9 and Figure 10 show the diagnostic equipment monitoring points that may be used during RD&D experiments. Sampling points will be selected based on the data that is to be collected during a particular experiment. Attachment I describes the research-specific diagnostic equipment performance in further detail.

Carbon monoxide is generated in trace quantities as result of incomplete combustion. The purpose of the RD&D experiments is to determine, by varying the operating parameters, the optimal system performance capabilities. The objective will be to operate the system to maximize complete combustion of the input waste, and thereby minimize the production of carbon dioxide.

In the closed-loop system configuration, no gas effluents are vented to the atmosphere. Any trace quantities of carbon monoxide will be recycled back into the system, and the carbon monoxide will undergo further combustion to be converted to carbon dioxide.

In the open loop configuration, no gas effluents are vented inside the building where personnel may be working. Rather gas effluents from the system are vented through a building stack to the outdoors. No personnel inside the building will be exposed to carbon monoxide from the treatment system. Previous experiments have shown that, when operating in steady-state, the system emits less than 20 parts per million (20 ppm) carbon monoxide. This level may be two or three times higher during brief periods when the system is starting up or shutting down. The OSHA permissible exposure limit is 35 ppm with a ceiling limit of 200 ppm for carbon monoxide. It is important to emphasize that the quantity of effluent generated during the RD&D experiments is relatively small, due to the small size of the research unit.

Additionally, treatment of wastes containing trichloroethylene will produce hydrochloric acid in the system scrubbers and trace quantities of phosgene in the gaseous effluent. Phosgene can be destroyed either by increasing the power to the SDP cells or by scrubbing the phosgene gas out of the effluent in the scrubbers where it is hydrolyzed (decomposed) by water. The effluent line exiting the PBR and the effluent line exiting the SDP unit will be fitted with acid scrubbers. Here water, acids, corrosion products from constituent reaction with PBR equipment, and trace quantities of wastes and decomposition by-products will be collected by the scrubber and neutralized.

Reaction Diagrams:

It is not possible to provide reaction diagrams for the decomposition of the hazardous wastes, because the intermediates that are formed during the breakdown process are not known. Identifying these intermediates and the degradation pathways are part of the research objective. Efforts are underway to model the breakdown of certain benchmark organics and predict the chemical intermediates that may be formed in the treatment system, but the degradation mechanism is complex and very dependent on the operating conditions of the system. The actual breakdown process will depend on parameters such as the flow rate of the system, the temperature of the packed bed, and the power supplied to the silent discharge plasma cells. It is the purpose of the research to begin to determine what intermediates are formed during the treatment process and to maximize the complete degradation of the input organic material into simple non-hazardous effluent by-products.

In the packed bed reactor, the organic material is decomposed by the addition of oxygen in a combustion process. The ultimate by-products of combustion are carbon dioxide and water, and possibly acid or salt. The formation of acid or salt depends on whether the input organic material contains other elements (e.g., halogens, etc.). A simplified reaction diagram for the combustion process is:

organics + O_2 = CO_2 + H_2O (+ acid or salt).

However, the combustion process in the packed-bed will not always be complete. Some of the organics will be decomposed into various chemical intermediates (the identity of which cannot be predicted at this time). Trace quantities of the input organics may resist decomposition altogether. The silent discharge plasma unit, which follows the packed bed reactor, is designed to complete the degradation of the remaining organics and their chemical intermediates. Like the packed-bed the precise breakdown mechanism in the discharge plasma cannot be diagrammed, because it is dependent on operating system variables like flow rate and cell power. Degradation of the organics is accomplished

by reactions with free-radicals that are produced in the discharge plasma; i.e., the hydroxyl (OH) radical and ozone (O^3). Simplified reaction diagrams of free-radical chemistry are:

organics + OH = CO_2 + H_2O (+ acid or salt)

organics + O^3 = CO_2 + H_2O (+ acid or salt).

QUALITY ASSURANCE PROJECT PLAN (QAPjP)

1.0 INTRODUCTION

The listing below provides pertinent information relative to Quality Assurance Project Plan (QAPjP) in accordance with the information provided in Section 10.1 of Test Methods for Evaluating Solid Waste, SW-846. U.S. EPA, 1982:

- Project: Packed-Bed Reactor/Silent Discharge Plasma Treatment Unit
- Date of Project Initiation: June 1993
- Project Officer: Louis A. Rosocha
- LANL Quality Assurance Director: Tony Grieggs
- Project Description: PBR/SDP technology uses an advanced oxidation technique for the treatment of hazardous wastes as a two stage treatment process. The first stage involves injection of liquid organic hazardous wastes into the externally heated PBR, where many of the hazardous compounds undergo vaporization and thermal decomposition. More complex organic compounds, however, may resist thermal destruction within the PBR and require further treatment. The effluent from the PBR passes into the second stage of the process, the SDP, which is comprised of a non-thermal electrical discharge plasma. Large quantities of reactive free radicals are generated in the plasma, and the free radicals react with and decompose the remaining hazardous organic constituents in the effluent. The end products of the PBR/SDP waste treatment processes include primarily carbon dioxide, water, carbon monoxide, and acids.

2.0 PROJECT DESCRIPTION

2.1 Objective and Scope Statement

The research objective of work under this permit is to demonstrate that similar destruction of components of a waste can be achieved as when the components were run alone as surrogates. The main purpose of this permit will be to allow the research to continue into the phase where an actual waste may be processed by the unit. If successful then modifications to this application may be made to deal with different and more complex waste than those purposed at this time.

It is not considered a possibility for this phase of the research that the analytical data or conclusions upon the data will be used in litigation. The main objective of the research is to produce comparable data with that of the surrogate data in order to determine if this line of research is worth pursuing on more complex hazardous waste in future research.

Quality assurance policies, outlined in Los Alamos Quality Assurance Program Plan (QAPP) and this Quality Assurance Project Plan (QAPjP) Sampling Activities will be adhered to throughout the term of this project. General sampling and quality control procedures are outlined and referenced within this specific QAPjP, where applicable.

2.2 Data Usage

The data collected on real waste will be used as a verification of data collected on waste surrogates. The research samples will be submitted to LANL's on-site laboratory for analysis.

The data obtained during this project will be used to assess the comparability of the data sets and the destructive effectiveness of the unit.

LANL will employ the "t" statistical test to determine if there is a difference between the two data sets. "t" will be defined as the difference between the means of the two sampling efforts divided by the standard error of the difference between the means of the two sampling efforts. "t" values will be used to compute the confidence limits of the data.

2.3 Schedule of Task and Products

The following shall be the schedule for this project upon issuance of the RD&D permit by the State of New Mexico.

TASKS	ANTICIPATED DATES
Start Project	February 1, 1994
Runs with Waste One	March 1 - June 1, 1994
Runs with Waste Two	June 1, - September 1, 1994
Runs with Waste Three	September 1 - December 1, 1994

3.0 PROJECT ORGANIZATION AND RESPONSIBILITY

The following is a list of key personnel and their corresponding responsibilities:

NAME	RESPONSIBILITY
Louis Rosocha	Principal Investigator
John Coogan	Scientific and Technical Oversight, Daily Operations, Analytical Diagnostics, Process Modeling
Roger Tenant	Mechanical Engineering Support
Mike Kang	Electrical Engineering Support
Graydon Anderson	Analytical Diagnostics and Instrumentation
Rudy Vargas	Overall Technician Support
Heidi Heck	Analytical Diagnostics and Instrumentation
Laurie Bechtold	Process Modeling

4.0 QUALITY ASSURANCE OBJECTIVES

Quality assurance objectives are provided in LANL's Quality Assurance Program Plan. Analytical methods for the parameters are specified in this document. The main objective of the research is to produce comparable data using a real waste stream with that of surrogate data to determine the effectiveness of the proposed process. Therefore, the level of QA/QC purpose is only that necessary to achieve the scientific and regulatory objectives of the project.

4.1 Measurement Objectives

Analytical measurements will be conducted by the LANL laboratory and will be performed in accordance with the QA procedures detailed in this QAPjP and in SW-846 (Revision 0, November 1990) for organics and inorganics analyses. Laboratory data will be validated according to the quality assurance protocols established for the CLP program.

4.2 Method Detection Limits

Detection Limit: As specified in the CLP's SOW for inorganic analysis, Appendix C, CLP SOW for Organic Analysis, the EPA Standard Method or the special analytical services (SAS) request for Organic Analysis.

4.3 Data Quality Objectives

4.3.1 Precision and Accuracy

The compounds that will be sampled and analyzed for under this QAPjP are listed in the Parameter Table in Section 5.0. The initial acceptance criteria for data precision, expressed as relative percent difference (RPD) of duplicate samples, is set at 50 percent or less. The initial acceptance criterion for accuracy, expressed as spike recovery percent (SRP), is 50 to 150 percent. Acceptance criteria may not be applicable to duplicate samples containing an analyte at a concentration less than 5 times its detection limit. Data quality objectives for laboratory accuracy and precision are established for each measurement parameter in accordance with the applicable methods of SW-846 (Rev. 0, November 1990), Third Edition 1986.

Accuracy expresses the nearness of a result or a mean of a set of results to the true value. Accuracy of laboratory data is assessed by means of reference samples and percent recoveries. Accuracy for field sampling is achieved by increasing the number and size of samples collected, and by establishing a sound sampling strategy. The accuracy goals of this project will be addressed by the use reference materials of the highest purity,

for method calibration, and sample spiking.

The use of spiked samples permit a constant check on method accuracy and will provide an indication of the degree of matrix effect. This will be expressed in terms of percent recovery.

$$\% \text{ Recovery} = \frac{(\text{Spiked Sample}) - (\text{Unspiked Sample})}{\text{Spike}} \times 100$$

This value will be calculated for all spiked samples.

Precision measures the degree of a set of duplicate results among themselves without assumption of any prior information as to the true result. For laboratory data, precision is assessed by means of duplicate/replicate sample analyses, and is expressed in terms of standard deviation. For sampling, precision is achieved by collecting an appropriate number of replicate samples to ensure that representative samples are collected. The relative percent difference (% RPD) will be calculated for each pair of duplicate analysis using the following equation:

$$\%RPD = \frac{S - D}{(S+D)/2} \times 100$$

S = First sample value
D = Second sample value

For laboratories, the minimum QC requirements for organic and inorganic routine laboratory analysis consist of both an initial and ongoing demonstration of laboratory capability to generate acceptable precision and accuracy with methods in the analysis of samples. The QC procedures that must be performed and documented, and criteria that must be met include, but are not limited to, the following:

For Organics Analysis:

- GC/MS Instrument tuned for both volatile and semi-volatile compound analysis;
- Initial multi-level calibration for each Target Compound List (TCL) compound;
- Continuing calibration for each TCL compound;
- Addition of surrogate compounds to each sample blank for determining percent recovery information;

- Replicate samples; and
- Reagent blank analysis.

For Inorganics Analysis:

- Initial calibration and calibration verification;
- Continuing calibration verification;
- ICP interference check sample analysis;
- Preparation blank analysis;
- Matrix spike analysis;
- Duplicate sample analysis; and
- Laboratory control sample analysis.

4.3.2 Data Representativeness

Representativeness expresses the degree to which data accurately and precisely represents the characteristics of a population, parameter variations at a sampling point, a process condition, or an environmental condition. For split samples, representativeness is achieved by splitting at least 10% of the facility's sample location.

4.3.3 Data Comparability

Comparability expresses the confidence with which one data set can be compared to another. In order to establish a degree of comparability such that observations and conclusions can be directly compared with all historical data and the surrogate data set, LANL will use standardized methods for holding times, preservations and shipping. Since EPA analytical methods will be used to analyze the research samples and compare to the methods used to analyze the surrogate samples, any comparison for this data will be of a qualitative nature.

4.3.4 Data Completeness

Completeness measures the amount of valid data obtained from a measurement system compared to the amount that was expected to be obtained under normal conditions. The data quality objective for the completeness of data with respect to the sampling is 90%. If this data quality objective is not met, LANL will review the need for resampling.

5.0 SAMPLING PROCEDURES

5.1 Introduction

Since the research objective of work under this permit is to demonstrate that similar destruction of components of a waste can be achieved as when waste components were processed alone as surrogates. The main purpose of this permit will be to allow the research to continue into the phase where an actual waste may be processed by the unit. It can be anticipated that similar destructive efficiencies can be achieved as those with the surrogate work. If successful then modifications to this application may be made to deal with different and more complex waste than those purposed at this time.

With this in mind, similar parameters will be monitored as were monitored during the surrogate experiments. Since most of the components anticipated to be used in the present research have already been shown to be more than 99% destroyed in previous surrogate work with this unit, it is not anticipated that process effluents will be hazardous.

5.2 Number of Samples

The number of samples, as well as the simple sampling strategy outlined in this section, are chosen based on the following:

- The objective of the sampling is to produce results for the purpose of assessing suppositions and thereby needing the simplest strategy and less quality control of the EPA project categories.
- The waste is well known, already having waste analysis information and components that have already been shown to be destroyed greater than 99% in testing with surrogates.
- The present research situation will readily allow for an increase or decrease in sampling effort to meet both scientific and regulatory objectives.

The number of samples will allow for a confidence interval equal for the sample measurement mean to be compared with the applicable regulatory threshold for constituents to determine if it is a hazardous level. The constituent of concern will not be considered to be present at a hazardous level if the upper limit of the confidence interval is less than the applicable regulatory threshold.

$$C = \bar{x} \pm t_{.20}\, s_{\bar{x}}$$

C = confidence interval
$\bar{x}$ = mean of measurements
$t_{.20}$ =
t value for a probability of 10 and single tailed test
$s_{\bar{x}}$ = standard error of mean

Initially, the number of samples will be three based on the lack of hazard for the reasons given above. This number allows a favorable "t" value than one or two. The number of samples will be increased or may be decreased to achieve the necessary confidence interval based upon the following:

$$n = \frac{t^2_{.20}\ s^2}{(R-\bar{x})}$$

n = number of samples
R = regulatory threshold
s = standard deviation of sample

5.3 Sampling Methods

The sampling methods to be used are chosen because of their ease of use in the present situation, the low degree of hazard associated with them, and will minimize sample contamination. The waste containers involved make these the simplest and most efficient choice.

The Calisaya is recommended in Chapter Nine of "Test Methods for

Evaluating Solid wastes, " third Edition, November 1986, for sampling free-flowing liquids and slurries contained in drums or shallow tanks, and similar containers. Chapter ten of the same reference recommends method 0030 for the sampling of gaseous effluents.

Representative samples from the waste container and effluent containers will be contained by using those techniques outlined in the various SW-846 analytical methods to be used or in Chapter Nine of "Test Methods for Evaluating Solid Waste," EPA, Third Edition, SW-846, November 1986. Samples will be collected using a systematic sample strategy described below.

All wastes to be treated will originate from operations at the LANL facility. All wastes will be permitted and will be selected based upon the waste analysis information existing under the LANL permit. Selection of waste containers will be based upon components within the waste matching those already tested as

surrogates with the unit.

Prior to treatment in the PBR/SDP processing unit, each container of waste selected will be sampled at 3 depths and analyzed by EPA Methods 9070, 7000, 8240, and 8270. A sample using a calisaya or glass tube from the upper third, mid-depth and lower third area of the waste container will be considered representative for the purpose of this phase of the research. All samples will be kept on cold packs until they are ready for analysis at LANL's on-site laboratory.

This input waste characterization of the waste container will be performed to ensure that the initial characterization is accurate and up-to-date. If the analysis of the major waste components is not within 80-120% of the existing waste analysis data for the container, then it will be rejected and a new container will be used in its place.

Additionally, during the experimental runs from each 55-gallon container of waste treated, a minimum number of samples, as

a minimum number of samples, as specified in the Parameter Table, of the liquid and gaseous effluent will be collected and analyzed by EPA Methods 9070, 7000, 8240, and 8270 for metals, volatiles, and organic constituents, respectively. This analytical data will verify that the hazardous constituents are being destroyed by the PBR/SDP treatment process.

The minimum frequency of sampling using SW-846 methodologies, as specified in the Parameter Table, will be to collect a complete set of monitoring samples (at least one sample per monitoring gas effluent monitoring points labelled "A" through "D" in Figures 9 and 10 of the permit application and one sample per two liquid collection points shown in Figures 9 and 10). One complete set of samples will be collected during research runs using the upper third of material in the waste container, a second complete set using the middle third of waste container material, and a third complete set using the lower third of waste container material. Every time a complete set of samples is collected, a trip blank and a duplicate will be collected as indicated in the Quality Assurance samples on the Parameter Table.

Process liquid effluent sample will be collected by sampling the effluent collection container using a calisaya or glass tube at mid-depth of the container and then transferring the liquid to the appropriate container as specified in the Parameter Table.

Gaseous effluents will be collected as specified by EPA Method 0030 (SLO-VOST) and analyzed by EPA Method 8240 for volatile organics.

Gaseous effluents will be collected as specified by EPA Method

0030 (SLO-VOST) and analyzed by EPA Method 8240 for volatile organic constituents. This method will allow for the changes in flow rates and sampling times that may be necessary to improve detection limits during present work, since very low levels, if any, or organic constituents are expected in the gaseous effluent. All samples will be kept on cold packs until they are ready for laboratory analysis.

Supplemental analyses may be performed for process monitoring points described in Section 3.3 of this chapter employing SW-846 Methods 8010 and 8015 using an in-line gas chromatograph capable of continuous monitoring, when necessary. This diagnostic equipment is similar to that used in the surrogate experiments and will increase the capability of the data as well as providing more detail on the process.

6. Sample Custody

Purpose: Due to the lack of evidentiary nature of the samples collected on this project, the nature of the research objectives, and the availability of the on-site laboratory at LANL, simple Chain-of-Custody procedures will suffice for this project.

A sample is under custody if:

1. It is in your possession, or

A sample is under custody if:

1. It is in your possession, or

2. It is in your view, after being in your possession, or

3. It was in your possession and you locked it up, or

4. It is in a designated secure area.

Procedures:

- Collect only the number of samples needed to meet the research/QC objectives. To the extent possible, determine the quantity and types of samples and sample locations prior to each unit run. As few people as possible should handle samples.

- Sample tags shall be completed for each sample, using waterproof ink.

- The Project Manager determines whether proper custody procedures were followed during the research work and decides if additional samples are required.

SAMPLE TAG

Project Name _____

Run No _____

Sample No _____

Collection Date/Time _____

Collector's Name _____

Sample Location _____

Analyze For _____ Preservative _____

Bottle _____ of _____ _____ Filtered ___ Nonfiltered

Transfer of Custody

- Samples are accompanied by a Chain-of-Custody Record (see Chain-of-Custody Record on the following page). When transferring the possession of samples, the individuals relinquishing and receiving will sign, date, and note the time on the record. This record documents sample custody transfer from the sampler, often through another person, to the analyst in the LANL laboratory.

- Samples will be packaged properly for delivery to the laboratory for analysis, with a separate custody record accompanying each shipment.

- All samples will be accompanied by the Chain-of-Custody Record identifying its contents. The original record will accompany the shipment, and the copy will be retained by the Project Manager.

6.2 Sample Tags

Purpose: This procedure establishes a method for the control of laboratory samples through the use of sample tags. (See sample tag on the following page.)

Procedures:

- All sample tags will be securely attached to the sample bottle.

- One tag will be completed for each sample container collected. (The tag will be looped around the neck of both bottles.) Each tag will contain the following information:

  - Run number;
  - The time and date the sample was collected;
  - Signature(s) of the sampler(s);
  - If a preservative has been added to the sample, the name of the preservative will be written; and
  - All appropriate analyses to be performed by the laboratory, for this sample.

  Since all samples will be analyzed by LANL, at a minimum, the laboratory shall document the sample numbers accepted and provide this information to the research project manager on a weekly basis.

6.3 Research Logbooks

Definition: The Research Logbook is used to record data and

observations in sufficient detail to enable an accurate reconstruction of activities. It is a controlled document issued to the project manager who, in turn, transfers each logbook to the individual(s) assigned specific research activities. The project manager is responsible for ensuring the logbooks are available during all research activities and are stored safely to avoid possible damage or tampering. Any lost, damaged or voided logbooks must be reported to the project manager immediately.

Format Requirements

All logbooks must be bound notebooks. Each logbook must be assigned an individual, serialized document control number.

All entries in the logbook must be dated, legible and written in waterproof, black ink. When a mistake is made, it must be crossed out with a single line, initialed, and dated. Each page of the logbook must be signed and dated by the individual(s) making the entry.

Supplemental Logbook information

Separate items used or generated at the research site are to be considered supplemental logbook information. These items may include, but are not limited to, sample log sheets, original data printouts from instruments, data summary sheets, and observation notes. These items must be permanently attached to the corresponding logbook.

Any verbal observations of research activities preserved using a tape recorder should be promptly transcribed, verified for accuracy, initialed, and dated. A copy of the transcription must be permanently attached to the corresponding logbook. The original recording of the data must be retained for the evidentiary files.

As with the logbook, supplemental logbook information must be signed and dated by the author(s). When a mistake is made, it must be crossed out with a single line, initialed, and dated. At a minimum, the information below must also be recorded on supplemental items.

- Project Name
- Project identification number, if applicable
- Logbook number of which the item is a supplement
- Page identification (e.g., Sheet __ of __)

During the sample activity, LANL personnel will note the following in the research logbook:

- Date and time;
- Sample description;
- Any evidence of contamination;
- Sample identification number;
- Equipment used and calibration results;
- Any preservation requirements;
- Deviations from approved Work Plan, or other problems; and
- Notes of conversations with project coordinators.

7.0 CALIBRATION PROCEDURES FREQUENCY AND PREVENTIVE MAINTENANCE

All instrumentation utilized for research activities will be calibrated in accordance with specific techniques provided by the manufacturers. A preventive maintenance schedule recommended by the respective manufacturers will be followed for each instrument. The calibration procedures for each instrument are maintained in the research laboratory, a copy of which will be available to research personnel. The laboratory calibration is delegated to the laboratory. Written calibration logs will be maintained by the Project Coordinator. Calibration of laboratory instrumentation is the responsibility of the LANL laboratory, documentation and recordkeeping will be those required under the CLP procedures.

8.0 ANALYTICAL PROCEDURES

The wastes to be processed will be existing LANL wastes that are stored under LANL's Permit and waste analysis plan. The wastes to be processed will be chosen to contain target compounds that match the already tested surrogates.

The parameters, for which effluent samples will be analyzed, will be the same sample parameters as listed in the waste analysis sheet to ensure that the initial characterization was accurate and up to date.

All analytical parameters will be analyzed by the on-site LANL laboratory. Analytical methods are specific in the Parameter Table. Specific analytical procedures are outlined in the SW-846 methods.

The analytical laboratory will submit summary reports of analytical results to the research project manager. At a minimum, the summary reports shall contain (1) laboratory review/approval date and signature; (2) date sample received; (3) sample preparation date; (4) sample analysis date; (5) preparation and analysis method reference; (6) sample identification number; (7) laboratory sample identification number; (8) sample reporting or detection limit; (9) dilution factors; and (10) laboratory quality control sample results indicating calculated percent recoveries, relative percent differences and self-imposed control limits (if applicable), as specified in the SW-846 Method being used.

9.0 DATA REDUCTION, VALIDATION AND REPORTING

9.1 Documentation

All findings will be referenced in the reports (to the fullest extent possible). All reports produced are entered in the LANL Document Control System. The QAPjP and the SOP will be available to research personnel. Research logbooks will be maintained by the Project Coordinator and will include a log of daily activities, deviations from the QAPjP, and a record of field conversations.

9.2 Data Reduction and Reporting

The format for reporting analytical data will contain the information specified in the CLP Regional Analytical Services (RAS) protocols for analyzing TCL organics, and TAL inorganics. Examples of these reporting formats are given in Appendix B "RAS Deliverables and Data Reporting Forms" of the User's Guide to the CLP. Data reduction and reporting is the responsibility of the LANL laboratory performing the analysis.

9.3 Data Validation

Data validation procedures establish a technically-sound and documented approach to accept or reject data in a uniform and consistent manner. All analytical data generated under SW-846 Methods during this project will undergo independent data validation performed in accordance with the EPA Functional Guidelines for Organic and Inorganic Data Validation. (February 1, 1988)

10.0 INTERNAL QUALITY CONTROL CHECKS

Details of the quality control procedures are outlined in the Los Alamos Quality Assurance Program Plan.

Specific quality control samples for this work include duplicate samples. Other quality control samples include equipment blanks,

to be included with each sample shipment. These designations are included in the Parameter Table of this plan.

Laboratory quality control samples are specified in the various SW-846 Methods.

Routine internal quality control checks are a function of the Project Manager conducting quality control checks. A summary report of quality control is submitted with each data package.

11.0 PERFORMANCE AND SYSTEMS AUDIT

11.1 Introduction

The LANL QA Program includes audits as independent checks on the quality of the data obtained from the sampling, analysis, and data gathering activities. Every effort will be made to have the audit assess a measurement audit in normal operation. The audit may show the need for corrective action.

11.2 Performance Audits

Performance audits are quantitative checks on different segments of project activities; they are most appropriate on sampling, analysis and data processing activities. Performance audit techniques include checks on sampling equipment, volume measurements and the analysis of QC samples and spiked samples. Performance audits of data processing can be conducted by using dummy sets of measurement data of known results to check calculation routines and/or "bad" data to trigger edit checks and check on error messages.

11.3 System Audits

System Audits are qualitative reviews of project activity to check that the overall quality program is functioning and that the appropriate QC measures are being implemented. The Project Manager will select a percentage of runs for audit by the LANL staff. If this project is audited, a written audit report will be provided to the state who were audited.

12.0 ROUTINE PROCEDURES USED IN DATA ASSESSMENT

After the completion of analysis, data validation and reporting, the laboratory sends copies of the data package to the Project Manager. Comprehensive QA audits will be performed by the laboratory. A copy of the analytical data package is forwarded to the Project Manager for inclusion in the appropriate report. This data will be summarized and tabulated in the final report.

Precision of the analytical results is predicated on the quality of samples collected. Quality Control Samples provide a means of evaluating the precision and quality of sample collection procedures.

Biases in the data are assessed by reviewing flagged data from the laboratory, and from the analysis of the quality control samples. Research generated data is assessed based on the adherence to this Quality Assurance Project Plan for Sample Collection and Method Analysis.

13.0 CORRECTIVE ACTION

Immediate corrective actions form part of normal operating procedures and are noted in project notebooks; problems not solved in this way require more formalized, long-term corrective action.

The essential steps in the system are:

- Identify and define the problem;
- Assign responsibility for investigating the problem;
- Investigate and determine the cause of the problem;
- Assign and accept responsibility for implementing the corrective action;
- Establish effectiveness of and implement the corrective action; and
- Verify that the corrective action has eliminated the problem.

The Project Manager will have primary responsibility for monitoring the activities of the research and identifying any quality problems. Any quality problems not resolved immediately will be brought to the attention of the LANL QA Director who will initiate the formal corrective action system described below.

14.0 REPORTS

The Project Director will submit a report of QA/QC activities to LANL QA. This report shall describes overall QA activities on the project, audits conducted, problems uncovered, and corrective action taken.

PERMIT ATTACHMENT B

DESIGN PLANS AND SPECIFICATIONS

Introduction:

This section provides the general facility description and the design plans and specifications of the Packed-Bed Reactor Unit combined with a Silent Discharge Plasma Unit (PBR/SDP) as required by HWMR-7, Part IX, § 270.14(b)(1).

The PBR/SDP unit belongs to Los the Alamos National Laboratory (LANL), which in turn is owned by the U.S. Department of Energy (DOE). LANL is co-operated by DOE and the University of California. Figure 1 is the site map showing the location of the subject unit.

The PBR/SDP unit is located at the Alternative Combustion Laboratory (ACL) in Technical Area 35 (TA-35) in a portion of Building 128 (Figures 2 and 3). Building 128 is located at latitude 35.8624 North and longitude 106.2945 West. The PBR/SDP unit occupies an area approximately 70 feet by 55 feet in the northeast corner of the Building. Figure 4 shows the layout of the unit and the associated RD&D ancillary waste storage area at Building 128.

A brief Synopsis of the PBR/SDP Hazardous Waste treatment Process

The PBR/SDP technology uses an advanced oxidation technique for the treatment of hazardous wastes as a two-stage treatment process. The first stage involves injection of liquid organic hazardous wastes into the externally heated PBR, where many of the hazardous compounds undergo vaporization and thermal decomposition. More complex organic compounds which resist thermal destruction within the PBR continue into the second stage of the process, the SDP, which is comprised of a non-thermal electrical discharge plasma. Large quantities of reactive free radicals generated in the plasma react with and decompose the remaining hazardous organic constituents in the effluent (Figure 9). The end products of the PBR/SDP waste treatment processes include primarily carbon dioxide, water, carbon monoxide, and acids.

Waste Feed System

An aliquot of liquid waste will be transferred from the waste container and placed into a graduated burette, which will allow a precise determination of the volume of waste to be treated. Waste will be introduced into the PBR/SDP treatment system using either a peristaltic feed pump or a magnetically coupled gear pump. The gear pump will be used for experiments requiring a higher waste flow rate, whereas the peristaltic pump can be used

for lower waste flow rates. Carrier gas, which will consist of air, will be introduced into the system along with the waste. An air compressor will be used in conjunction with an atomizer to inject the waste and carrier gas into the PBR furnace unit.

Packed-Bed Reactor Unit Components

Up to three PBR units will be operated for the RD&D experiments. Each PBR furnace unit will consist of a 15-centimeter inner diameter stainless steel pipe with three equally-sized zones that can be independently heated to maintain constant temperature in the PBR. The length of each PBR furnace will be between 1 and 1.5 meters. The PBR pipe will be filled with 1.27-centimeter (0.5-inch) long alumina cylinders and 0.476-centimeter (0.1875-inch) diameter alumina spheres. The heat source surrounding each PBR will be an external electrical tube furnace, with three equally-spaced and independent heating zones. There are three temperature sensors on each of the three furnace segments used to control furnace temperature. Prior to injection of waste into the unit, the PBR will be preheated to a given temperature, depending on the experimental parameters being tested. During actual treatment, the heat generated from waste decomposition may reduce or eliminate the need to continue to operate all three zones of the external furnace.

Downstream of the PBR will be a heat exchanger and an acid scrubber. The heat exchanger will be constructed with a simple counter flow design consisting of an inner tube through which the gaseous effluent flows and an outer tube through which non-contact cooling water is circulated. The scrubber will be a portable unit (e.g., Mystaire brand or equivalent) fitted with a reservoir that will recirculate the scrubber water to remove acids from the effluent gas for the duration of a particular experiment. A second reservoir will contain neutralization solution (potassium hydroxide). Neutralization of the acid gases will produce potassium chloride. The pH of the scrubber water will be monitored using an on-line pH meter to determine when neutralizing solution is spent and, consequently, when the scrubber wastewater reservoir should be emptied. At a minimum, the scrubber wastewater reservoir shall be emptied whenever the RD&D waste stream being studied is changed.

From the acid scrubber, the effluent gas will pass through a polypropylene filter, which will catch any extra liquid or particulates that have made it past the heat exchanger and acid scrubber. The replacement of the filter will depend on the waste treatment flow rate. The estimated filter change interval will be once per week for waste treatment of 36 kilograms/day and twice per week for waste treatment of 108 kilograms/day. The actual replacement rate will be determined during the course of the experiments. At a minimum, the filter will be changed whenever the waste stream being studied is changed.

The PBR interior furnace piping, piping to the heat exchanger/scrubber, and interior portions of the heat exchanger will be constructed of a corrosion resistant metal (e.g., Haynes alloy or Hastealloy). Once the corrosivity of the effluent gases has been reduced in the scrubber, less corrosion-resistance material will be required. The piping from the heat exchanger/scrubber through the polypropylene filter to the SDP cells will be constructed of stainless steel.

Silent Discharge Plasma Unit Components

Up to three SDP cells will be operated for the RD&D experiments. The cells can be set up to run either in parallel or in series, depending on the treatment needs and flow requirements of a particular experiment. Each SDP unit will consist of two electrodes, both of which are covered with a dielectric layer (e.g., glass) to separate the electrodes from the gas effluent to be treated. The gap between the dielectric layers will have an approximate effluent processing volume of 0.5 liters in each cell. Silent discharge plasmas are usually produced with near ambient pressure (1 to 3 atmospheres) electrical discharges. With the use of a dielectric barrier and application of alternating high voltages, large quantities of plasma are generated by microdischarges in the gas between the electrodes. These discharges, which are transient, typically develop in only a few nanoseconds. Due to the short duration of the microdischarges the electrical energy is mainly coupled into electron channels. The energetic electrons effectively create free radicals in the effluent gas. The free radicals generated by the plasma react with organic compounds in the effluent gas stream, primarily producing carbon dioxide, water, acids, and trace levels of unreacted wastes and waste decomposition by-products.

The principal electrical power supply is a series invertor that switches charged capacitors through a high-quality pulse transformer by means of a high-power thyristors. The unit can supply nearly 4 kilowatts of power at voltage pulse repetition frequencies of up to 4.5 kilohertz. The electrical power deposited into the discharge plasma is measured using a high-voltage probe combined with a charge-transfer bridge. Integration of a voltage-charge plot obtained from these two instruments gives the measured power.

Downstream of the SDP unit, the effluent gas will pass through an acid and carbon dioxide scrubber (e.g., Mystaire brand or equivalent). The scrubber will be a portable unit fitted with a reservoir that will recirculate the scrubber water to remove acid and carbon dioxide from the effluent gas for the duration of a particular experiment. A second reservoir will contain neutralization solution (potassium hydroxide, KOH). Neutralization of the acids will produce potassium chloride. The

pH of the scrubber water will be monitored using an on-line pH meter to determine when the neutralization solution is spent and, consequently, when the scrubber wastewater reservoir should be emptied. At a minimum, the scrubber wastewater reservoir will be emptied whenever the RD&D waste stream being studied is changed.

The piping from the SDP cells to the second treatment system scrubber will be constructed of stainless steel material. Since the acid scrubber will reduce the corrosivity of the effluent gases, less corrosion-resistant material is required for those portions of the system downstream of the scrubber. The piping leading from the scrubber to the Building 128 vent (for open loop) or back to the waste feed portion of the system (for closed loop) will be constructed of either PVC or copper material.

The effluent exiting the final scrubber in the system is compatible with both copper and PVC piping and will not react with these materials. There is no particular distinction between the use of one type of material over the other. Rather, copper and PVC piping were selected because they are both easy to work with and are easily available. Copper piping has a slight advantage over PVC in that commercial fittings are easily obtained. PVC has a slight advantage over copper in that it is lighter and less expensive. Either material may be used in this portion of the system configuration without impacting the experimental results.

Pollution Control

The following description of the method of pollution control to prevent the release of any effluent hazardous wastes from the PBR/SDP Treatment Unit to the atmosphere are in accordance with the requirements of the HWMR-7, Part IX, § 270.14(b)(8)(vi).

A backup safety pollution control device is necessary only when the PBR/SDP system is operated in an open loop configuration, with effluent gases vented to the atmosphere. Figure 9 shows the treatment system components in an open loop configuration. Prior to being exhausted through the Building 128 vent, the effluent gas stream will pass through a granular activated carbon unit. The carbon unit is in place to prevent the accidental release of hazardous substances to the atmosphere, in case of PBR/SDP unit malfunction. The carbon unit will also serve to absorb unreacted wastes or organic waste decomposition by-products. A pressure monitoring gauge will be installed either side of the carbon unit and a pressure drop across the unit will be used to signal that the carbon is spent and requires replacement.

The granular activated carbon unit will not be used when the PBR/SDP is operated in a closed-loop mode. Figure 10 shows the treatment system components in a closed loop configuration. In the closed loop setup, the effluent gas will be recirculated into

the system to serve as a carrier gas for continued waste treatment. No effluent will be vented to the atmosphere.

Ancillary Waste Storage Area

The following information has been furnished in keeping with the regulatory requirements of HWMR-7, Part IX, § 270.14(b)(19)(xii).

Since the ancillary RD&D hazardous waste storage area will only be operated for the duration of the RD&D permit, LANL shall not use it to manage wastes other than those specifically associated with PBR/SDP treatment. The ancillary hazardous waste storage area associated with the PBR/SDP unit will include 55-gallons of waste awaiting treatment, 55-gallons of waste from the acid scrubbers, 55-gallons of other solid wastes (e.g., spent filters, replaced piping). Figure 4 shows the location of the RD&D hazardous waste storage unit.

The waste containers will be placed in secondary containment (e.g., pan or inflatable berm) on the concrete pavement outside and adjacent to Building 128. The secondary containment will be sized to accommodate both ten percent of the total waste volume stored in the ancillary unit and the entire contents of the largest container that may be managed in the unit (in this case, 55 gallons). The storage unit shall also be covered to prevent precipitation run-on and run-off. Floor areas in the ancillary storage will be smooth concrete designed to accommodate rack and shelf as well as fully loaded 4,000-pound forklift truck axle loads. All floor surfaces (both of the lab and the ancillary storage areas) are to be flat except for ramp areas.

Wastes generated during the PBR/SDP Treatment Process

Wastes generated on a continuous basis during PBR/SDP treatment are expected to be primarily carbon dioxide, water, carbon monoxide, acids, and trace quantities of unreacted waste and reaction by-products. The major expected by-products of the waste treatment process are water and carbon dioxide. The treatment process is highly efficient, and is capable of 99.99% destruction of the organic constituents in the wastes. The composition of the trace quantities of unreactive waste (i.e., the potential 0.01% of waste material that may not be destroyed in the unit) is described in Permit Attachment A which is included herein. The trace quantities of reaction by-products include small amounts of carbon monoxide that may be generated.

Carbon monoxide is generated in trace quantities as result of incomplete combustion. The purpose of the RD&D experiments is to determine, by varying the operating parameters, the optimal system performance capabilities. The objective will be to operate the system to maximize complete combustion of the input waste, and thereby minimize the production of carbon dioxide.

In the closed-loop system configuration, no gas effluents are vented to the atmosphere. Any trace quantities of carbon monoxide will be recycled back into the system, and the carbon monoxide will undergo further combustion to be converted to carbon dioxide.

In the open loop configuration, no gas effluents are vented inside the building where personnel may be working. Rather gas effluents from the system are vented through a building stack to the outdoors. No personnel inside the building will be exposed to carbon monoxide from the treatment system. Previous experiments have shown that, when operating in steady-state, the system emits less than 20 parts per million (20 ppm) carbon monoxide. This level may be two or three times higher during brief periods when the system is starting up or shutting down. The OSHA permissible exposure limit is 35 ppm with a ceiling limit of 200 ppm for carbon monoxide. It is important to emphasize that the quantity of effluent generated during the RD&D experiments is relatively small, due to the small size of the research unit.

Additionally, treatment of wastes containing trichloroethylene will produce hydrochloric acid in the system scrubbers and trace quantities of phosgene in the gaseous effluent. Phosgene can be destroyed either by increasing the power to the SDP cells or by scrubbing the phosgene gas out of the effluent in the scrubbers where it is hydrolyzed (decomposed) by water. The effluent line exiting the PBR and the effluent line exiting the SDP unit will be fitted with acid scrubbers. Here water, acids, corrosion products from constituent reaction with PBR equipment, and trace quantities of wastes and decomposition by-products will be collected by the scrubber and neutralized.

Waste Management

The wastes collected in the acid scrubbers will be emptied by lab personnel into an appropriate container for subsequent storage, treatment, and/or disposal. Other residues that may be periodically generated during RD&D experiments including piping, spent filters, and spent activated carbon units shall also be placed into an appropriate container by lab personnel for subsequent storage, treatment, and/or disposal.

All residues generated by PBR/SDP treatment shall be containerized and placed into an RD&D ancillary storage area at Building 128 (see Figure 4). As the waste containers are filled, LANL's Waste Management Group (EM-7) will be contacted to pick up the waste for subsequent storage, treatment, and/or disposal. Wastes generated during the RD&D experiments shall be characterized and managed in accordance with the approved waste analysis plan in LANL's existing RCRA permit.

PERMIT ATTACHMENT C
STANDARD OPERATING PROCEDURES AND RESEARCH PLAN:

I. SUMMARY DESCRIPTION OF ACTIVITIES

This document describes the procedures for safely operating the Packed Bed Reactor (PBR)/Silent Discharge Plasma (SDP) system. This two-stage, thermal/plasma prototype represents an alternative-to-incineration apparatus which will be used for the destruction of machining oils and cutting fluids (namely Trimsol and Regal) as well as gaseous mixtures containing some fraction of chlorinated solvents (trichloroethylene, trichloroethane). As the overall destruction efficiency of this technology has been shown to be very high, the resulting effluent will be composed almost exclusively of CO_2, H_2O and simple acids such as HCl. Sensitive on-line instrumentation provides a means of directly monitoring the waste stream composition.

II. LOCATION AND RESPONSIBILITY

This system will be located in the Alternative Combustion Laboratory (ACL) which comprises the northern half of the low bay area of Building 128 at TA-35. Lou Rosocha (CLS-6) is the principal investigator for this project and has overall responsibility for technical and program leadership, guidance and interfacing. Paul Wantuck, CLS-2, provides scientific and technical oversight to the project and is responsible for day-to-day operations.

III. ADDITIONAL PROJECT PERSONNEL

Other personnel who are authorized to operate this system are:

Roger Tennant, CLS-2	(mechanical engineering support)
Mike Kang, CLS-6	(electrical engineering support)
John Coogan, CLS-6	(electrical engineering and process modeling)
Graydon Anderson, CLS-4	(analytical diagnostics and instrumentation)
Ruby Vargas, CLS-2	(overall technical support)
Heidi Heck, CLS-6	(analytical diagnostics and instrumentation)
Laurie Berthold, CLS-6	(process modeling)

IV. APPARATUS DESCRIPTION

a. Packed Bed Reactor: A diagram of the PBR/SDP system is shown in Figure 7. Two bed reactors will be employed for the anticipated experiments. The smaller bed reactor is a stainless steel cylinder with a diameter of 6.35cm and a length of approximately on meter. The larger PBR (prototype version) is constructed of a Haynes alloy metal, has a diameter of 16.5cm,

and is 1.2m long. Both reactors are filled with activated alumina beads producing a bed void fraction of approximately 50 percent. Operating temperatures for both PBR's range from 800 to 1000 C. The heat source for the reactors is a commercial electric tube furnace. For the smaller reactor, a single zone furnace is employed while for the larger version a three zone furnace allows for greater flexibility in axial temperature control.

The purpose of the packed bed reactor is to both volatilize and treat predominantly liquid based materials (which may or may not contain solvents) for subsequent processing by the second stage SDP. The liquid is introduced into the packed bed through a coaxial atomizer which acts to generate a fine spray above the bed material. Oxidizer gas will be either air or a mixture of 20% oxygen and 80% argon. Flammable liquids are injected such that the fuel/oxidizer ratio is well below the lower explosion limit. In addition, by staying fuel lean it is possible to prevent the production of a flame. Thus, the PBR can be classified as a thermal treatment unit and <u>not</u> as an incinerator.

The atomizer on the small PBR has an average liquid flow capability of ~1 gm/min. For the 6" PBR, the fluid throughput should be on the order of 17 gm/min (~1 kg/hr). These numbers will vary slightly depending upon the composition and properties of the liquid.

The gas can be directed through a series of traps (liquid trap, soda lime trap, activated carbon bed) and then to a stack exhaust or sent to the input of the silent discharge reactor. The exhaust line downstream of the PBR has ports which allow for gas sampling and subsequent analysis.

<u>b. Silent Discharge Plasma Reactor:</u> In general the SDP cells consist of two flat plate electrodes (at least one of which is covered by a dielectric barrier such as glass) which are physically separated to produce a discharge volume(Figure 8). Gas from the output of the PBR or from prepared mixtures is introduced into this volume, typically through a water bubbler, and subjected to a plasma discharge. The plasma discharge is initiated by application of a high voltage AC field to the electrodes. During the course of an experiment, feed gas pressure, gas flow rate, cell voltage and current, and consumed electrical power will be monitored. As with the PBR, the effluent exiting the SDP is sent through a series of traps and discharged through a stack vent. The effluent stream is monitored during operation with a variety of diagnostics.

Initial experiments will utilize a rectangular-shaped single cell employing an electrically grounded, nickel-coated bottom electrode and an upper water electrode which is connected to the high voltage power supply. A modified plasma cell which has a

large volume and can process higher gas follow rates will be employed in later experiments.

c. Analytical Chemistry Diagnostics: The effluent steam from the PBR and SAP is analyzed with several on-line diagnostics including a Beckman Acculab 2 IR spectrophotometer, a Perkin Elmer Sigma 2000 Gas Chromatograph with both a flame ionization and electron capture detector (which allows ppb-detection and sensitivity), a UTI model 100C, 0-300 amu mass spectrometer, and a BIORAD FTIR spectrometer. These instruments provide a means of very accurately accessing the composition of the product (waste) streams.

V. HAZARDS AND PRECAUTIONS

V.1 Packed Bed Reactor

The hazards associated with PBR operation are thermal burns, flammable materials (oils), and hydrochloric acid which represents a process reaction product. The reactor operates at local atmospheric pressure obviating the need for pressure safety concerns.

The reactor is electrically heated to between 800 and 1000 C by a tube furnace which surrounds the bed. Exterior shielding prevents contact with reactor hot parts. The flammability issue is addressed by operating in a fuel lean condition, that is with the fuel/oxidizer ratio well below the lower explosive limit. For REGAL machining oil (which is >95% petroleum oil) the LEL is 0.6% by volume in standard air. The PBR typically operates at about 17% of the LEL. For comparable flow conditions, flammability is lead of a concern for the TRIMSOL machining fluid, because even at 100% concentration, its composition is only 30% petroleum oil. IN the event of oxidizer gas flow cessation, a solenoid valve in the oil injector line closes preventing any further introduction of liquid compounds into the bed. Temperatures and pressures generated within the bed are constantly monitored by axially positioned thermocouple and mechanical gauges, respectively. Excessively high temperatures and pressures ("pinging") during the course of operation serve as an indication of approach to LEL.

Hydrochloric acid is formed as a waste product subsequent to the injection of chlorocarbon containing liquids into the PBR. A significant fraction of the HCl is removed (remaining fraction at the ppm level) by the bed material itself (wet HCL + alumina to form alumina chloride). Additional removal is provided by a liquid trap positioned downstream of the heat exchanger and upstream of the SAP inlet. In this trap, water containing dissolved HCl is condensed out of the effluent gas. A soda lime trap in conjunction with an activated carbon trap, both located in the exhaust line downstream of the SAP cell, provide for

further removal of HCl. The PBR/SAP system is presently operating in an open loop configuration with final gas product exhaust through an outside-located stack. Note that only soda-lime and activated carbon traps will remove not only HCl but other unforeseen and undesired emission products. Thus, project personnel are not exposed to waste stream components during system operation. Periodically, the bed material and other traps will have to be recharged and/or cleaned. During such operation, involved project personnel will wear safety glasses, lab coats and acid-resistant gloves. Prior to initiation of such activity, the appropriate MSDS will be reviewed. All employees ,must take Hazardous Communication Training. The chemically contaminated material will be hazardous waste and disposed of in proper fashion (see Section VI).

V.2 Silent Discharge Plasma Cells

The primary operational hazard with the SAP cells is high voltage. The power supplies utilized for cell operation have outputs as high as 30kV with several tenths of an ampere peak current.. Protection against high voltage exposure is accomplished in several ways. Only qualified project personnel are authorized to operate the SAP. The project's principal investigator shall designate such individuals. The SAP operators must be trained in CPR and have taken the Laboratory's electrical safety training course. At least two project personnel will be present in the ACL during SAP operation. The IEEE document entitled IEEE Recommended Practices for Safety in High-Voltage and High-Power Testing" is utilized for general guidance in enacting operational procedures. A copy of this document is available at the ACL's ES&H station. The SAP cell is enclosed in a box constructed of polycarbonate panels. This box in interlocked with the power supply such that any attempt to access the cell during operation deactivates the power supply. Warning lights are activated during SAP operation and appropriate hazard signs are posted in the vicinity of the cell.

Secondary hazards associated with SAP operation include ozone and HCl generation as well as UV light emission from the plasma discharge. As noted previously, the PBR/SAP system represents an open loop configuration (with final gas discharge through a stack) such that reaction products produced within the cell are not released to the ACL environment. A thermal ozone destructor is connected to the SAP effluent line providing of effective elimination of O_3 from the reaction product stream. In general, the amount of chlorocarbons in the SAP will itself be small and can easily be removed by the soda lime and/ or carbon traps before gas discharge represents a weak source of UV radiation. The polycarbonate enclosure surrounding the cell prevents any of this radiation from escaping into the ACL.

V.3 Analytical Diagnostics

No apparent hazards are associated with operation of the various diagnostic equipment. All sample lines are connected directly to the instrumentation. A separate SOP for gas chromatograph operation is currently under review by HS Division personnel.

VI. Estimated Output from PBR/SAP System

For system operation at 1 kg-oil/hr (mixture comprised of 95% machining oil, 5% TCE) with 175% excess air (50% OF lel) AT 1000°c, the following product amounts are anticipated.

Product	Volume	Production Rate (lbs/hr)
CO	<<1 ppm	6.5 (10^{-9})
CO_2	7.2%	3.14
O_2	8.3%	2.6
H_2O	7.5%	1.33
N_2	76.9%	21.2
HCL	447ppm	0.016
NO_x	98.9% NO 1.1% NO_2 8.5ppm	2.5(10^{-4})
Ozone	~0.3%	0.14
TCE	<1ppm	2.9(10^{-7})

VII. WASTE PRODUCTION AND MANAGEMENT

As noted in Section V, the primary waste stream products are water, CO_2, CO, and HCL. At this time, HCL is considered to represent the major hazardous waste component produced in the process. The primary removal mechanism for (wet) HCL is via reaction with the alumina pellets in the PBR. The remaining fraction is captured in the liquid upstream of the SDP(dissolved in water) and two traps downstream of the SDP. Periodically, the bed and trap material will have to be replenished with fresh material. The used material represents the primary source of hazardous waste in this effort. The collected liquid may under some circumstances be used for quantitative analysis of PBR effluent. If not used for this purpose it will be treated as a hazardous liquid waste.

Disposal of all hazardous waste will be done under the guidance of CLS-2's and/or CLS-6's hazardous waste coordinator. The frequency of bed/trap cleaning and replenishment will be dependent upon several factors including length of system operation, quantity of material processed, etc.

In general, this project will adhere to the Waste Management Plan (Ch. VIII) and Waste Minimization Guidelines (Ch. XII, attachment VI) set forth in the Chemical and Laser Sciences Division ES&H Program Plan dated July 1991. A copy of this document is present in the ACL's ES&H station. Finally,

personnel associated with this project will attend the Laboratory's Hazardous Waste Generator Training course.

VIII. GENERAL OPERATING PROCEDURES

VIII.a Packed Bed Reactor

With the fluid and oxidizer gas off, the fluid reservoir can be filled. The electric furnace is turned on. The temperature of the furnace is controlled using a set-point controller.

When the PBR reaches the desired operating temperature(s) [small PBR has one zone, large PBR has three zones), the oxidizer gas is turned on and set to the desired flow rate.

The fluid reservoir flow valve is opened and the fluid flow adjusted to the desired value. The oxidizer and fluid flow rate, the pressure and temperature distribution, and composition of the exhaust gas are monitored during the test. Adjustments to any of these para meters can be made as necessary to change operating conditions. The PBR effluent can be directed to the SDP or discharged through the exhaust stack.

Upon test completion, turn off the fluid flow. Continue to flow the oxidizer gas to react any remaining bed fluid.

Shut off oxidizer gas and either prepare for the next test or turn off the oven.

VIII.b Silent Discharge Plasma Cell

Ensure that the protective polycarbonate enclosure is in position around the cell.

Activate the high voltage power supply. The red warning light will come on automatically at this time.

Initiate gas flow. Gas may be supplied directly from the PBR or from prepared mixes. Monitor the effluent stream. Adjust cell power to maximize hydrocarbon and chlorocarbon destruction efficiency.

When a test is completed, shut off the gas flow and the high voltage power supply.

IX. SOP REVISION

This SOP will be revised and reviewed if it becomes apparent that a change in procedure is required, the experimental apparatus is significantly altered, or if it becomes necessary to change the input stream composition.

X. EMERGENCY PROCEDURES

X.1 General Emergency

1. In the event of any noted or suspected malfunction with the PBR or SDP, shut off all liquid and gas flows.
2. Deactivate the bed furnace and the SDP high voltage supply.

3. Evaluate the situation. If a true emergency exists:
   a) Evacuate the laboratory.
   b) Call 911 and report emergency.
   c) Notify supervisor and group leader.

X.2 Thermal or Acid Burn

1. If possible, perform on-site first-aid(i.e., treat injured area with cold water).
2. Transport the injured person to HS-2 for treatment.
3. Notify supervisor and group leader.

X.3 High Voltage Accident

In the event of a high voltage accident with the SDP:

1. Shut off main power breaker to SDP power supply.
2. If necessary begin CPR.
3. Call 911 and report accident.
4. Notify supervisor and group leader.

X.4 Fire

In the event of a fire with the PBR:

1. Shut off gas and fluid flow.
2. Deactivate furnace.
3. Evacuate the area.
4. Call 911 and report fire.
5. Notify supervisor and group leader and Building Manager.

X.5 Hazardous Gas Release

In the event of a release of hazardous gas in the ACL:

1. Evacuate the area immediately.
2. If possible shut down the PBR/SDP system.
3. Open all access doors to Building 128 and allow sufficient time for purging by outdoor air circulation.
4. If someone receives excessive exposure to the gas, or if it is a significant release, call 911 and notify the supervisor and group leader and Building Manager.
5. Repair the system.

XI.0 RESEARCH PLAN

PBR/SDP treatment will involve the use of a pilot-scale unit to demonstrate the technical feasibility and performance capability of an innovative hazardous waste treatment technology. It is anticipated that this system has the potential to destroy hazardous waste organic constituents with a higher efficiency and without the production of typical undesirable high-temperature combustion products of present treatment technologies. It is believed that full-scale development of this system would provide distinct improvements over currently available treatment technologies, such as incineration, in terms of both destruction efficiency and effluent gas composition.

LANL has identified a need to explore alternative technologies for the treatment of hazardous organic wastes. LANL has already evaluated the SDP process as a post-incinerator treatment process for oils and solvents using surrogate products. Encouraging results from that evaluation has led to the construction and testing of a combined, two-stage packed bed reactor (PBR/SDP) unit.

This section describes the parameters to be varied and monitored, general methods of sampling and analysis, and inspection procedures to be conducted under the RD&D permit.

XI.1 Objective

The research objective of the work to be conducted under this permit is to determine if process data for a real waste stream is comparable with data produced for surrogates of that waste stream. The answer will determine if the present technology is worth pursuing on a more complex and hazardous waste in future research. Components of the waste have been tested individually in the unit as surrogate (i.e., non-waste) materials. These tests have demonstrated 99.99% destruction of the surrogates.

The main purpose of obtaining a RD&D permit at this time is to allow the research to continue into a phase where an actual waste may be processed by the unit. If it can be successfully demonstrated that similar destructive efficiencies with the real waste can be achieved as those with the surrogate work, then modifications to this application may be made to deal with different and more complex waste than those proposed at this time.

The objective of the RD&D permit will be to obtain data from the use of the PBR/SDP unit by treating hazardous wastes under several different operating conditions. Liquid hazardous wastes will be chosen from those wastes in storage at LANL and are described in Attachment L. The result of the work under this permit is anticipated to demonstrate the complete (greater than 99.99%) destruction of the hazardous constituents of the waste samples.

To date no wastes have been treated in the proposed RD&D unit. Several raw material (i.e., non-waste) surrogates have been tested to evaluate the effectiveness of the unit in treating organic constituents. PBR treatment has been conducted on mixtures of commercial cutting oil containing up to several percent trichlorethylene (TCE), trichloroethane (TCA), and carbon tetrachloride (CCl_4). These experiments have demonstrated that when the PBR unit is operated alone the unit is capable of removal of TCA down to the parts per million level and removal of TCE and CCl_4 down to approximately 100 parts per billion level. When the SDP unit has been operated alone, removal of >>99% TCE

and 90% CCl_4 have been noted. When the PBR/SDP unit treatment is combined, as proposed under the RD&D permit, mixtures containing several percent chlorocarbon concentrations have been removed to well below the 100 parts per billion level.

XI.2 Operating Parameters and Monitoring Frequency

The hazardous waste streams to be tested under the RD&D permit are identified in Attachment L. Under this RD&D permit, optimization of the PBR/SDP operating parameters will be refined and possible PBR/SDP limitations for treating the selected wastes will be determined. Furthermore, the specific system configuration and need for additional components will be reviewed for possible enhancement of the PBR/SDP system. Specific components included in this review may include atomizers, bed materials, pumps and compressors for injection, component construction materials, heat exchanger design, and external furnace configuration.

Bench-scale studies for several operating parameters have already been conducted using surrogate materials. PBR/SDP work with surrogate materials, similar to those proposed under this permit, has not exceeded any LANL safety or environmental criteria. Using this previously gathered information, the research planned under the RD&D permit shall be conducted using the following operating parameters.

Operating Parameter	Experimental Range
System configuration	open or closed loop
Number of PBR units	1 to 3 units
Number of SDP cells	1 to 3 cells
Packed-bed temperature	250 to 1300 °C
Input waste flow rate	36 to 108 kg/day
Oxidizing gas flow rate	Up to 1460 l/min
SDP cell voltage	Up to 4 kilowatts
SDP cell voltage pulse repetition	Up to 4.5 kilohertz

Mass balance calculations will be performed for each experiment to determine the final outcome of the hazardous waste constituents.

XI.3 Monitoring Plan

Monitoring equipment includes systems for process control and

effluent and emission analysis that enable the operator of the PBR/SDP unit to take those measurements necessary to demonstrate that the unit is operating in a controlled and safe manner, is not presenting a hazard to human health and the environment, and is in compliance with permit conditions stipulated herein as per State and Federal regulatory requirements.

The PBR/SDP unit is described in Attachment B, and shown in Figure 9. The monitoring system involves process monitoring and effluent and emissions monitoring.

XI.3.1. Process Monitors

The PBR/SDP treatment units are operated as a computer controlled system. Process monitoring includes the metering of gas flow rate, temperature, pressures, SDP cell voltage and current, and consumed electrical power, to provide for stable and safe operation of the PBR/SDP unit. Temperature sensors from the PBR unit(s), electrical power at the SDP cells, gas pressure and data from the on-line diagnostic equipment are all computer monitored. The system is designed to optimize hazardous waste destruction so that no more than one part per million of total hydrocarbons is detected in the effluent, as measured by the on-line diagnostic equipment. If the treatment system is not performing to the required minimum destruction level, the computer will shut off the waste feed rate and adjust the PBR temperature and SDP energy supply to increase the destruction efficiency of the system.

If the computer-monitored temperature in the PBR or the gas pressure in the SDP becomes too high, the system is designed to automatically shut off. Equipment shut down is discussed in detail.

XI.3.2. Emissions and Effluent Monitors

As stated in Section 3, wastes generated during PBR/SDP treatment are expected to be primarily carbon dioxide, water, carbon monoxide, and acids, with traces of corrosion products from reaction of acidic effluent gases with process equipment, and traces of unreacted wastes and other combustion by-product gases. Monitoring of PBR/SDP effluents will parallel the accumulation of operating parameter and process data in order to analytically confirm these data, in addition to evaluating the effectiveness of the PBR/SDP technology.

The composition of the gaseous effluent stream may be analyzed with several on-line diagnostic instruments including: Teledyne Max5 combustion gas analyzer (CA), Beckman Acculab 2 infrared (IR) spectrometer, Perkin Elmer Sigma 2000 Gas Chromatograph (GC) with both flame ionization and electron capture detector (which allows ppb-detection and sensitivity), UTI Model 100C 0-300 amu mass spectrometer, a BIORAD FTIR spectrometer, and an ultraviolet

absorption cell (or equivalent instruments. Figure 9 and Figure 10 show the available sampling locations in the PBR/SDP system. The diagnostic equipment will analyze the effluent from one or more sampling points, depending on the data to be collected during a particular experiment. The diagnostic and monitoring equipment will provide a real-time indication of treatment performance. Although not all diagnostic equipment may be operated simultaneously, at a minimum, the gas chromatographic and FTIR spectrometer will be operated continuously. Other diagnostic equipment will operated intermittently to provide supplemental data. Attachment I describes the research-specific diagnostic equipment performance in further detail.

The pH of the scrubber water will be monitored using an on-line pH meter to determine when neutralizing solution in each acid scrubber is spent and, consequently, when the scrubber wastewater reservoir should be emptied. Samples will be collected of the acid scrubber wastewater as described in Attachment A.

XI.3.3 Equipment Shut Down

Any upset condition that affects the unit's ability to perform within permit requirements or that poses a threat to human health or the environment will be cause for shut down of the unit. Malfunction of either the PBR or the SDP will also be cause to terminate an experiment. Equipment shut down will include immediate shut down of the waste feed system, continued input of the carrier gas to purge the system, and safe shut down of the remaining electrical, mechanical, and diagnostic equipment components. Shut down procedures to be followed in the event of an emergency are described above in the Standard Operating Procedures.

Additionally, the PBR/SDP system is computer controlled. When unsafe temperatures in the PBR or high pressures in the SDP cells are detected, the computer is programmed to automatically shut off the waste feed system first, and then to shut off the PBR and SDP units.

XI.4 Inspection Procedures

Routine inspections of the PBR/SDP treatment unit equipment components shall be conducted as presented in Attachment C.

DATA AND RECORDKEEPING

Data on PBR/SDP operating parameters (feed rate, temperature, air flow), treated waste volume, and effluent composition as analyzed by on-line diagnostics equipment will be collected on a continuous basis. This data will be collected in the automated computer system databanks. Specifically these data include:

- Input waste feed rate into the PBR,
- Input gas feed rate into the PBR,
- PBR temperature,
- Effluent gas flow rate after the PBR
- Effluent gas flow rate before the SDP
- Effluent humidity and temperature after the PBR unit,
- Pressure in the packed bed,
- SDP cell power (voltage, charge, repetition),
- pH of the acid scrubbers solution,
- Effluent carbon dioxide, oxygen, and carbon monoxide composition.

LANL's project monitoring records for data gathering and analysis of the effluent shall include:

- Date and time of sampling,
- Sampling location,
- Name of individual(s) who performed the sampling or measurements;

Environmental monitoring for protection of human health and the environment is an integral part of the overall research program. Continuous computer monitoring of the temperature and pressure in system ensures safe operating conditions, and monitoring of the effluent enables the researchers to evaluate treatment effectiveness.

Data will be recorded in facility logbooks, and in the diagnostic instrument computer databases. At a minimum, all process monitoring (flow, temperature, pressure) will be conducted at hourly intervals during operation of the PBR/SDP unit, or whenever operating parameters are changed. Mass balance calculations will also be performed to determine the final outcome of the hazardous waste constituents.

The on-site analytical laboratory performing the EPA analytical methods will submit summary reports of analytical results to the research project manager. At a minimum the summary reports shall contain (1) laboratory review/approval date and signature (2) date sample received; (3) sample preparation date; (4) sample analysis date; (5) preparation and analysis method reference; (6) sample identification number; (7) laboratory sample identification number; (8) sample reporting or detection limit; (9) laboratory quality control sample results including calculated percent recoveries, relative percent differences and self-imposed control limits, if applicable; and (10) dilution factors, if required for sample analysis.

Records will be stored in a file cabinet in the Chemical and Laser Sciences (CLS) lab. Reports summarizing the findings of the RD&D project will be prepared on a monthly basis. Copies of

the monthly reports shall be submitted to the New Mexico Environment Department.

PERMIT ATTACHMENT D

PREPAREDNESS AND PREVENTION:

SECURITY AND SAFETY PLAN

SECURITY

The following information has been provided in accordance with the requirements of New Mexico HWMR-7, Part V, 40 CFR, §§ 264.14; and §§ 264.50 through 264.56; and § 264.37.

The PBR/SDP unit is located inside Building 128 at Technical Area 35 (TA-35) in Los Alamos, north-central New Mexico. Building 128 is constructed of concrete, sheet metal and metal beams, and is structurally sound and secure against unauthorized entry through the walls, roof, or vents.

Building 128 shall be actively monitored by research personnel during daytime hours, and no unauthorized personnel or unescorted visitors will be allowed into this research building. LANL's security force shall regularly patrol the areas outside of and surrounding Building 128. During off-hours, the doors to Building 128 shall be securely locked to prevent unauthorized entry.

Barrier and Means to control Entry:

Although TA-35 is surrounded by a barbed-wire topped chain-link fence, during off-hours the gate to TA-35 shall be closed and locked. LANL's security force will regularly patrol the area. The entrance to Building 128 shall be posted with a bilingual (English and Spanish) sign reading "Authorized Personnel Access Only."

The Safety Plan implemented for the RD&D unit will complement those procedures approved in LANL's current RCRA Contingency Plan contained in the facility's RCRA permit authorized November 1989 and those procedures specified in the "RCRA Interim Status Contingency Plan for Mixed Waste Units" prepared May 1992.

The general emergency procedures applicable to the RD&D unit shall be in accordance with the Contingency Plan, Attachment J.

SAFETY PLAN:

An analysis of hazards related to the PBR/SDP unit must be performed by project personnel, group safety personnel, the building manager, and interactions with Health, Safety and Environmental Management personnel. Administrative control measures shall include personnel training and development of Standard Operating Procedures (SOP).

Access to communications or alarm systems

Engineering control measures must include warning lights and alarm systems, electrical current breakers, protective shielding panels, electrical circuit designs, and pollution control equipment.

The PBR/SDP unit must be configured to minimize hazards and appropriate measures shall be taken to conduct safe operations and to minimize potential emissions. Building 128, where the RD&D unit is located, must be equipped with the following safety systems:

- Fire detection/alarm/annunciator system;
- Fire suppression (sprinkler) system;
- Ventilation system
- Aisle space

Design and Operation of Facility

The PBR/SDP unit shall operate with the following safety features:

- Containers of hazardous wastes must be covered and stored in a secondary containment to minimize leakage hazards and precipitation run-on/run-off problems.
- Waste injection line shall be equipped with a solenoid valve that will automatically shut off waste flow into the PBR, in the event that there is a cessation of oxidizing gas (oxygen and argon, or air) into the unit.
- External shielding around the PBR unit to prevent contact with the heating elements.
- The PBR/SDP system shall be computer controlled and designed to automatically shut down when unsafe PBR temperature and SDP cell gas pressure are detected.
- The computer controlled system will be designed to monitor destruction efficiency. When minimum destruction requirements (i.e., no more than 1 part per million total hydrocarbons) is not being achieved by the system, the computer will shut off the waste feed, but continue to operate the PBR/SDP components to treat the remaining waste already present in the system.
- The SDP cell shall be enclosed in a box constructed of polycarbonate panels. This box will be interlocked

with the high voltage power supply system. Any attempt to access the SDP cell during operation shuts off the power supply.

- Red flashing high voltage warning light on main high voltage power supply equipment which will be activated when power supply in on.

- Power supply equipped with an emergency high-voltage shut-off button.

- Final effluent gas stack shall be equipped with a back-up granular activated carbon absorber to prevent the accidental release of hazardous substances in case of PBR/SDP unit malfunction during open-loop system operation.

Operating Parameters

Using previously gathered information obtained from bench-scale studies on surrogate materials(Attachment L), LANL shall conduct the research planned under this (RD&D) permit in a manner that protects human health and the environment, using the following operating parameters:

Operating Parameter	Experimental Range
System configuration	Open or Closed loop
Number of PBR units	1 to 3 units
Number of SDP cells	1 to 3 cells
Packed-bed temperature	250 to 1300 °C
Input waste flow rate	36 to 108 kg/day
Oxidizing gas flow rate	Up to 1460 l/min
SDP cell voltage	Up to 4 kilowatts
SDP cell voltage pulse repetition	Up to 4.5 kilohertz

Mass balance calculations shall be performed for each experiment to determine the final outcome of the hazardous waste constituents and the effectiveness of the hazardous waste treatment.

A summary of potential hazards and mitigating measures is provided below in accordance with the requirements of HWMR-7, Part V, 40 CFR, § 264.17:

FIRE HAZARDS

Hazard Description:

The packed-bed reactor will be heated by furnace and oxidizes organic liquids at temperatures ranging from 250°C to 1300°C. Electrical equipment can be a fire hazard. Flammable materials and wastes also pose a potential fire hazard.

Potential Effects: Personnel injury; equipment damage.

Safety Measures:

The packed-bed reactor shall not be pressurized and will be operated with very lean fuel mixture to prevent ignition, deflagration, and explosion. Furnace heating elements are in vendor-supplied enclosures. Additional heat shields shall be provided for exposed hot plumbing. This computer controlled system will shut down PBR/SDP when excessive temperatures are detected. Building 128 shall be equipped with electronic heat/smoke detectors, building-wide alarm system, sprinkler system and fire extinguishers. All operating personnel will be properly trained to recognize hazards and respond to emergencies.

ELECTRICAL HAZARDS

Hazard Description:

Power supplies, furnaces, computer equipment, diagnostics equipment, and tools use 115/208 volt service. SDP unit uses high-voltage (5 to 30 kV) equipment.

Potential Effects: Personnel injury from electrical shock; equipment damage.

Safety Measures:

Electrical safety system must contain high voltage warning lights, emergency shut-off switch, and enclosure/cabinet interlocks. Red flashing high voltage warning light shall be mounted to the main high voltage power supply cabinet and be activated when high voltage supply is on. The emergency high voltage shut-off button shall be a prominent red button that interrupts high voltage supply under emergency conditions. Electrical interlocks prevent operation of high-voltage power supply if plasma cell enclosure or power supply cabinet door is not in place or properly closed. All electrical equipment must be properly grounded. All operating personnel shall be properly trained to recognize hazards and respond to emergencies. All personnel involved in potentially hazardous high voltage

operations must work in pairs in compliance with the "Buddy system" (29 CFR, Part 1910.120).

- **CHEMICAL HAZARDS**

Hazard Description:

Hazardous liquid organic wastes are treated in the unit. Cleaning agents and solvents, such as acetone and alcohol, are used during equipment assembly and maintenance.

Potential Effects: Personnel injury; equipment damage; fire.

Safety Measures:

Hazardous wastes containers in the RD&D ancillary storage area shall be placed in a secondary containment and covered to minimize leakage hazards and prevent precipitation run-on/run-off. Cleaning agents and solvents shall be stored in the chemical cabinet. MSDSs shall be kept in a notebook file at the RD&D unit. Rags containing cleaning solvents will be disposed of in approved containers. Containers shall be emptied by personnel with waste generator training at the Building 128 satellite storage area.

The ventilation system of the PBR/SDP Unit, i.e. Building 128, shall consist of a through-the-wall fan with a capacity of 100 cubic feet per minute. The PBR/SDP exhaust stack will be equipped with back-up activated carbon canister to prevent accidental release of hazardous constituents in case of equipment malfunction during open-loop system operation. Concentrations of hazardous gaseous effluents shall be monitored by associated diagnostic instruments.

Building 128 shall be equipped with an emergency eye wash station. Chemical residues generated during RD&D treatment will be managed in approved containers and temporarily in Building 128 satellite storage area. Wastes will be removed from the satellite storage area by LANL's Waste Management Group (EM-7) in accordance with procedures outlined in the existing RCRA permit for the facility.

- **MECHANICAL HAZARDS**

Hazard Description:

Routine mechanical assembly and lifting operations are carried out at the RD&D unit. Accidents involving tools, fixtures, and lifting devices have the potential to cause personnel injury or equipment damage.

Potential Effects: Personnel injury; equipment damage.

Safety Measures:

Only approved lifts and hoists will be used. Personnel will be trained to exercise caution in the use of hand and power tools, wearing protective equipment such as safety glasses, hand gloves, respirators, and ear muffs. Personnel shall be shown the most appropriate way to lift an item in a manner that prevents injuries to their spinal system. Tripping and slipping hazards shall be mitigated by proper storage of equipment and good housekeeping.

- **COMPRESSED GAS HAZARDS**

Hazard Description: Compressed gases in bottles through K-size and pressures up to 3000 psi are normally used at the unit. There are no pressure vessels in the facility, both packed-bed and plasma cells operation at only 1 to 3 psi pressure differentials.

Potential Effects: Personnel injury; equipment damage; chemical release.

Safety Measures:

Personnel shall receive training in the use of compressed gases and associated regulators, valves, gauges, and plumbing. Proper regulators will be used for various gases and gas cylinders. Check valves shall be installed on equipment to prevent build-up of hazardous stored compressive energy and consequent mechanical failure. The PBR unit shall be equipped with thermocouples and mechanical gauges that measure the temperature and pressures generated in the packed-bed. Unit operators shall monitor the PBR/SDP temperature and pressure in order to prevent explosions from occurring.

Arrangements with local authorities

LANL must attempt to make arrangements to familiarize the local authorities (e.g., police, fire department, emergency organizations, etc.) with layout of the facility, properties of hazardous waste handled at the facility, and evacuation routes in compliance with HWMR-7, Part V, 40 CFR, § 264.37. A detailed description of the local authorities (specific to the subject RD&D activity) with whom LANL has made arrangements has been provided in Attachment J (Contingency Plan).

PERMIT ATTACHMENT E

INSPECTION PLAN

This section describes the general inspection procedures and schedule for the LANL Research, Development and Demonstration (RD&D) Packed-Bed Reactor/Silent Discharge Plasma (PBR/SDP) Unit located in Building 128 of Technical Area 35 (TA-35). The information submitted is in accordance with the requirements of HWMR-7, Part V, §264.15.

Inspection of the PBR/SDP Unit

LANL shall conduct routine inspections of the PBR/SDP treatment unit equipment components to identify equipment malfunction, deterioration, and operator errors that might lead to a release of hazardous waste to the environment and pose a threat to human health and the environment. Additionally, the ancillary hazardous waste storage area will be inspected to ensure that no releases to the environment have occurred or may potentially occur.

Frequency of Inspection:

Inspections shall be conducted every day that the PBR/SDP system is operated, to identify problems promptly and allow for timely repair and cleanup. Research operators of the PBR/SDP unit will be responsible for conducting inspections, and originals of the inspection records will be kept in an inspection logbook by the RD&D research group.

Schedule of Inspection:

LANL shall inspect all safety and emergency equipment, security devices, operating and structural equipment, monitoring equipment, and communication equipment using the schedule in Table B-1. The schedule shall be kept at the facility. In addition, the exterior of Building 128 and the ancillary storage will be examined per security Police schedule for signs of vandalism, intruders, and fire.

Further, if an inspection indicates that corrective action measures are warranted, any and all actions taken, along with time, date, and other pertinent information, must be recorded on the inspection form and all subsequent inspection forms until corrective measures are completed. If a condition is found in which a release to the environment is imminent or has already occurred, the unit shall be shut down by the RD&D supervisor or a designated representative.

Also, any upset condition that affects the unit's ability to

perform within permit requirements or that poses a threat to human health or the environment will be cause for shut down of the unit. Malfunction of either the PBR or the SDP will also be cause to terminate the experiment. If at any stage of the experiment, an assessment indicates that human health or the environment may be adversely affected, the Contingency Plan, provided as Attachment J, shall be implemented.

Provision for Aisle Space

Aisle space must be maintained around the PBR/SDP unit to allow unobstructed movement of personnel and any fire protection equipment, spill control equipment, or decontamination equipment that may be needed to respond to an emergency at the treatment unit. Aisle space will be actively maintained through inspections of the area to be performed each day that the unit is operated.

Quarterly Environmental Safety & Health (ES&H) inspections of Building 128 shall be conducted by the group ES&H officer in conjunction with one or more of the following personnel: group leader (or qualified delegate), division EH&S committee member, division office representative, and a Health and Safety (HS) division representative. Both Occupational Safety and Health Administration (OSHA) and RCRA deficiencies will be noted during the quarterly inspection.

Items covered shall include: Signs and other postings, Standard Operating Procedures(SOP) availability, Material Safety Data Sheet (MSDS) availability, waste handling procedures, provisions for spills of hazardous materials, fire extinguishers, personal protective equipment availability, housekeeping, chemical storage, compressed gas cylinder storage, ventilation, and building perimeter. Deficiencies noted during the inspection shall be recorded in a memo, which prioritizes the deficiency (i.e., imminent danger, serious risk, low risk, minor condition) for attention and corrective action. Records of the inspections are to be maintained by the group leader and group ES&H officer.

Recordkeeping/Inspection Log

Problems related to equipment or operational malfunction, deterioration, or operator error will be recorded in the logbook that will be maintained throughout the RD&D project. Details of the corrective action measures taken in response to these errors will also be recorded in the project logbook. Inspection records will be retained for a minimum of three years from the date of inspection. At a minimum, these records must include the date and time of the inspection, the name of the inspector, a notation of the observation made, and the date and nature of any repairs or other remedial action.

AIR QUALITY STANDARDS:

The following information has been supplied in accordance with the requirements of HWMR-7, Part V, §264, Subpart BB.

Although any accidental releases of hazardous waste at Building 128 might cause little or no threat to human health and the environment, (because the PBR/SDP project is a pilot-scale experiment) LANL's Air Quality Section (EM-8) shall conduct air monitoring activity around the RD&D facility.

All specific pieces of equipment including valves shall be monitored monthly to detect leaks. Any valve for which a leak is not detected for two successive months may be monitored the first month of every succeeding quarter, beginning with the next quarter, until a leak is detected. If a leak is detected, it shall be repaired as soon as practicable, but not later than 15 calendar days after the leak is detected.

The monitoring plan both for the PBR/SDP unit including the emissions and effluent monitors shall be conducted as outlined in the Standard Operating Procedures and Research Plan described in Permit Attachment C.

LOCATION STANDARDS:

The following information has been provided in accordance with the requirements of HWMR-7, Part V, §264.18.

At TA-35 where the RD&D facility is located, all of the exposed rocks are of the Tshirege member of the Bandelier Tuff which is about 1.13 million years old. A projected/inferred fault line passes east of the already existing Building 128. The possible presence of the Guaje Mountain fault is indicated by discrete fault scarps. However, in the area surrounding TA-35 where building 128 is situated, similar scarps have not been observed.

TA-63, directly south of TA-35-128 is the proposed location for the new Hazardous Waste Treatment Facility. As required to comply with the seismic standards in HWMR-7, Part IX, §270.14(b)(11)(ii), subsurface exploration was performed at TA-63 during the Fall of 1992 and summer of 1993 by Woodward-Clyde Federal Services under contract to LANL. Exploration trenches driven within the bounds of and perpendicular to TA-63 revealed that no faults which have displacement in Holocene time are present at TA-63 or in the vicinity of the Guaje Mountain fault projection.

PERMIT ATTACHMENT F

INSPECTION RECORD FORM

Inspection Sheet (page 1 of 2)

PACKED BED REACTOR/SILENT DISCHARGE PLASMA UNIT

PART I

Enter condition of item inspected (OK or AR*) in column for day inspected.

ITEM	INSPECTED FOR	SUN	MON	TUE	WED	THU	FRI	SAT
RD&D Unit Equipment	Properly functioning; signs of leaks or deterioration.							
RD&D Waste Container Storage Area	Deterioration and leaks; corrosion, damage; any leaks or rainwater in berm/pan; condition of berm/pan; all containers sealed closed. Ensure that only waste to be treated in the RD&D unit is stored in area.							
Labels	All waste storage containers inspected for hazardous waste labels identifying contents.							
Warning Signs	Check for "Authorized Personnel Access Only" signs at entry doors.							
Building Security	Condition of doors/locks.							
Aisle Space	Minimum of 2 feet of aisle space is maintained around RD&D hazardous waste container storage area and around the RD&D unit itself.							
Spill Control and Fire Emergency Equipment	Present and in good working order.							
DATE	Date of Inspection.							
TIME	Time of Inspection.							
INSPECTOR	Inspector Initials.							

Inspection Sheet (page 2 of 2)

PACKED BED REACTOR/SILENT DISCHARGE PLASMA UNIT

PART II

For any AR (Action Required) in PART I above, describe below: action required, action taken, date of action. Attach additional sheets if necessary. Inspectors must detail any deficiency noted above. Items to be included are: type of problem, any action taken, and the date/time of the action. Provide signature of individual performing inspection, daily date and time record was signed and completed.

INSPECTOR NAME and SIGNATURE	DATE and TIME	ACTION REQUIRED	ACTION TAKEN

PERMIT ATTACHMENT G

PERSONNEL TRAINING

The information contained in this section outlines the responsibilities and training programs for personnel at the PBR/SDP Unit, as required to demonstrate compliance with HWMR-7, Part V, § 264.16 and Part IX, § 270.14(b)(12).

Dr. Louis A. Rosocha will lead the RD&D program for the PBR/SDP unit. He is the principal investigator for this project and has overall responsibility for technical and program leadership, guidance, and interfacing. He has a doctoral degree in physics from the University of Wisconsin, Madison.

Personnel authorized to operate the PBR/SDP system and their duties are described below. In the absence of any of the personnel listed below, only qualified and suitably trained personnel shall be authorized to perform the RD&D experiments.

Name	Responsibility
John Coogan	Scientific and Technical Oversight, Daily Operations, Analytical Diagnostics, Process Modelling
Roger Tenant	Mechanical Engineering Support
Mike Kang	Electrical Engineering Support
Graydon Anderson	Analytical Diagnostics and Instrumentation
Rudy Vargas	Overall Technician Support
Heidi Heck	Analytical Diagnostics and Instrumentation
Laurie Bechtold	Process Modelling

LANL's personnel training program conforming to RCRA requirements shall be managed by the LANL Risk Management Support Group (HS-3) of the Health and Safety (HS) Division. Records of formal training for each person who manages hazardous waste must be maintained in the HS-3 training office. At a minimum, all PBR/SDP operations personnel must receive the following training:

- General Employee Training (GET)
- Introduction to Hazard Communication
- OSHA Hazardous Waste Operations (29 CFR 1910.120) and an annual Refresher Course (as necessary)
- Waste Generator Training
- CPR - Adult
- First Aid - Standard
- Electrical Safety Awareness Training
- Pressure Safety: Compressed Gas Systems
- Contingency Plan/Spill Prevention, Control and Countermeasure (SPCC) Plan
- Procedures for using, inspecting, repairing, and replacing facility emergency and monitoring equipment
- Key parameters for automatic waste feed cut-off systems
- Response to fires or explosions
- Shut down of operations

Division and group leaders and immediate supervisors shall be responsible for ensuring that education and training in site-specific emergency response procedures and in LANL's emergency response program are also provided. Periodic unannounced emergency drills and exercises shall be used to familiarize employees with emergency procedures.

Additionally, authorized personnel will receive unit-specific training in Standard Operating Procedures (SOP), a copy of which has been included herein as Permit Attachment C. The SOP shall be reviewed at least annually and updated when necessary. Review and revision of SOPs will be directed by LANL's Environmental Protection Group (EM-8).

The safety training records of new staff must be reviewed upon assignment to the research unit. Additional training shall be designated as necessary. Individual training records of operations personnel will be reviewed annually by the team leader.

All new LANL employees must receive appropriate training within six months of their date of hire or within six months of their transfer date to a position involving handling of hazardous

waste. Personnel must not work in unsupervised positions until they have successfully completed the appropriate levels of training for their position and responsibilities.

LANL shall maintain the following documents and records at the RD&D facility:

(1) The job title for each position at the PBR/SDP unit related to hazardous waste management, and the name of the employee filling each job;

(2) A written job description of the responsibilities and duties of each personnel. This must include the requisite skill, education or other qualifications;

(3) A written description of the type and amount of both introductory and continuing training that will be given to each person filling a specific position at the facility;

(4) Training records on current personnel must be kept until closure of the facility. Training records on former employees must be kept for at least three years from the date the employee last worked at the facility.

The following pages contain the RD&D Training Course Summaries and Personnel Training Records:

Subject: General Employee Training (GET)

Relevant Compliance Requirements	DOE 5480.10, DOE 5480.11, DOE 5480.20, and LP 106-01.0
Description	GET consists of the following fifteen training modules. Facilities (5974) Policies (5975) Quality Assurance (5976) Security (5977) Safeguard Awareness (5711) ES&H Policy (5542) Employee Participation Packet (4459) OSHA Rights and Regulations (5543) Industrial Safety (5540) Fire Protection (5224) Emergency Management (5544) Industrial Hygiene (5545) Occupational Medicine (5546) Radiation Protection for the Occupational Worker (5547) Lockout/Tagout (5541) Environment (5548)
Audience	All new employees, contractors, affiliates, long-term visitors, and co-op students.
Prerequisites	None
Retraining	Radiation Protection for the Occupational Worker (5547): every two years OSHA Rights and Regulations (5543): yearly Lockout/Tagout (5541): every two years
Length	8 hours
Frequency	Every Monday and Tuesday as part of the hiring process
Contact	HS-3, 7-0059, K479

Subject: **Health**
Course: **Introduction to Hazard Communication**

Course Number: 2398

Relevant Compliance Requirements	ARs 1-4, 1-9, 2-1, 6-1, 6-2, 6-3, 6-4, 6-5, 6-6, 6-7, 6-8, 6-9, 8-1, 8-3, and 12-1
Description	Provides information about requirements of the Hazard Communication Standard and its application at the Laboratory; includes detailed discussion of employee's right to know, labeling requirements, and Material Safety Data Sheets (MSDSs) and the general principles of hazard recognition, evaluation, and control.
Audience	Required for all new and transferred employees and visitors who work directly with chemicals or who may be routinely exposed to chemicals during the course of their normal work activities.
Prerequisites	None
Retraining	None
Length	2 hours
Frequency	Weekly
Contact	HS-3, 7-0059, K494

Subject: **Environment** Course Number: 4465

Course: **Hazardous Waste Operations: Occasional Site Worker (24 hr)**

Relevant Compliance Requirements	29 CFR 1910.120
Description	Meets OSHA training requirements as described in 29 CFR 1910.120. Topics include regulations, rights and responsibilities of workers, nature of hazards, toxicology, industrial hygiene, monitoring methods and equipment, hazard evaluation, storage, handling and labeling, personal protective equipment, engineering controls, decontamination, and emergency response plans. One additional day of field experience under a trained, experienced supervisor is required to complete the training.
Audience	Required for workers who are on the site of a treatment, storage, and disposal (TSD) facility or a solid waste management unit (SWMU) only occasionally for a specific limited task (such as, but not limited to, groundwater monitoring, land surveying, and geophysical surveying) and who are unlikely to be exposed to hazard levels over permissible exposure limits and published exposure limits.
Prerequisite	None
Retraining	8 hours once a year; see Hazardous Waste Operations Refresher (Course 4466)
Length	24 hours
Frequency	As needed
Contact	HS-3, 7-0059, MS K479

Subject: Environment
Course: Hazardous Waste Operations: Refresher

Course Number: 4466

Relevant Compliance Requirements	None
Description	Meets annual refresher training requirements for anyone who has completed 24- or 40-hour OSHA training as described in 29 CFR 1910.120. Topics include a review of regulations, toxicology, industrial hygiene, monitoring and sampling, and personal protective equipment.
Audience	Required for all employees and supervisors who have taken the Hazardous Waste Operations courses for Occasional or General Site Workers.
Prerequisite	Hazardous Waste Operations: Occasional Site Worker (24 hr, Course 4465) or Hazardous Waste Operations: General Site Worker (40 hr, Course 4464)
Retraining	Yearly
Length	8 hours
Frequency	As needed
Contact	HS-3, 7-0059, MS K479

Subject: **Environment** Course Number: 4419

Course: **Hazardous Waste Generator Training**

Relevant Compliance Requirements	ARs 9-4 and 10-3
Description	Defines hazardous waste and its classifications; describes the federal and state laws and regulations governing hazardous waste, including procedures for handling empty containers, procedures for mixing wastes, and the responsibilities of hazardous waste generators.
Audience	Required for all employees who generate hazardous waste, including spill coordinators and hazardous waste managers.
Prerequisite	None
Retraining	None
Length	2 hours
Frequency	Weekly (module in Extended General Employee Training)
Contact	HS-3, 7-0059, MS K479

Relevant Compliance Requirements	ARs 1-8, 6-1, 6-8, 6-9, 7-1, 8-1, 8-4, 8-5, and 15-1
Description	Includes artificial ventilation, one-person adult CPR, and choking prevention procedures for adults. Students who successfully complete this course are issued an American Red Cross certification card that is valid for 1 year.
Audience	Suggested for all interested Laboratory employees. Required for employees working hands-on with energized electrical systems (see AR 7-1); CPR requirement may also be fulfilled through successful completion of First Aid: Standard or CPR: Community.
Prerequisites	None
Retraining	Once a year
Length	4 hours for classes of 6 or fewer students; 6 hours for classes of 7 or more students.
Frequency	As needed
Contact	HS-2, 7-7251, D421

Subject: **Health**
Course: **First Aid: Standard**

Course Number: 35

Relevant Compliance Requirements	ARs 1-8, 6-1, 6-8, 6-9, 7-1, 8-1, 8-4, 8-5, and 15-1
Description	Includes adult one-person artificial ventilation, CPR, and choking prevention procedures; control of bleeding; initial treatment of shock; first aid for burns, fractures, and sprains; poisoning; diabetes; strokes; seizures; hypothermia and hyperthermia; and movement of injured persons. Students who successfully complete this course are issued an American Red Cross certification card for (1) adult CPR valid for 1 year and (2) standard first aid valid for 3 years. Students must complete the entire course to receive either certification.
Audience	Suggested for all interested Laboratory employees, and especially for employees working in remote field locations and/or with chemicals, flammable and combustible liquids, explosives, cryogenic fluids, hazardous gases, energized electrical systems, machine shop equipment, and in areas involving spark- or flame-producing operations and in limited egress/confined spaces (see Relevant Compliance Requirements listed above).
Prerequisites	None
Retraining	Once every 3 years to maintain certification in first aid; Adult CPR is required once every year during intervening years to maintain certification in CPR.
Length	8 hours
Frequency	As needed
Contact	HS-2, 7-7251, D421

Relevant Compliance Requirements	ARs 7-1, 8-1, 8-5, and 8-7
Description	Familiarizes students with electrical hazards and their identification, personal protection devices, housekeeping, flexible cables, capacitors, inductors, interlock systems, and administrative requirements for working on electrical equipment.
Audience	Required for electrical, electronic, and electromechanical technicians; electrical and electronic engineers; and experimental scientists utilizing apparatus with high voltages and currents.
Prerequisites	None
Retraining	Once every 3 years
Length	3 hours
Frequency	2 times a month and as needed
Contact	HS-3, 7-0059, K479

Relevant Compliance Requirements	ARs 6-8, 6-9, and 14-1
Description	Provides a basic understanding of fluid force and pressure relationships and presents the Laboratory requirements for working with intermediate fluid pressures of 150 to 3000 psia.
Audience	Required for all personnel working with fluid pressures over 150 psia.
Prerequisites	Pressure Safety Orientation (Course 769)
Retraining	None
Length	4 hours
Frequency	4 times a year and as needed
Contact	HS-3, 7-0059, K479

LOS ALAMOS NATIONAL LABORATORY EMPLOYEE DEVELOPMENT SYSTEM
EMPLOYEE TRANSCRIPTS FROM 01/01/1979 TO 06/09/1993

DIVISION : 79
GROUP : 7906 CLS-6
Z-NO/NAME: 106751 COOGAN JOHN J

COURSE TITLE	COURSE NUMBER	SESSION NUMBER	SESSION DATE	GROUP CHARGED	COST CNTR	PGM CODE	HOURS	FEE	ST*
SEXUAL HARASSMENT PREVENTION TRAINING FOR EMPLOYEES	5429	31	02/18/93	CLS-6			1.50		C*
G.E.T. - OSHA RIGHTS AND REGULATIONS	5543	81	10/19/92	CLS-6			.50		C
G.E.T. - RADIATION PROTECTION TRAINING FOR THE OCCUPATIONAL WOR	5547	81	10/19/92	CLS-6			1.00		C
G.E.T. - LOCKOUT/TAGOUT TRAINING FOR AFFECTED EMPLOYEES	5541	81	10/19/92	CLS-6			.25		C
CPR - ADULT	3583	849	05/14/92	CLS-6			4.00		C
PRESSURE SAFETY ORIENTATION	769	20	03/05/92	CLS-6			4.00		C
CLS-6 SAFETY MEETING	6172	5	12/05/91	CLS-6			1.00		C
HAZARDOUS WASTE GENERATOR TRAINING - HSE	4419	165	11/08/91	CLS-6			3.00		C
CLS-6 GROUP WEEKLY ES&H MEETING	5525	3	11/07/91	CLS-6			1.50		C
CLS-6 GROUP WEEKLY ES&H MEETING	5525	4	10/24/91	CLS-6			1.50		C
CLS-6 SAFETY MEETING	6172	1	10/10/91	CLS-6			1.00		C
CLS-6 SAFETY MEETING	6172	4	10/03/91	CLS-6			1.00		C
CLS-6 SAFETY MEETING	6172	3	09/25/91	CLS-6			1.00		C
CLS-6 SAFETY MEETING	6172	2	09/19/91	CLS-6			1.00		C
MERCURY SAFETY WORKSHOP PART II	6658	1	09/18/91	CLS-6			4.00		C
CLS-6 GROUP WEEKLY ES&H MEETING	5525	5	09/12/91	CLS-6			1.50		C
CLS-6 GROUP WEEKLY ES&H MEETING	5525	6	09/05/91	CLS-6			1.50		C
ELECTRICAL SAFETY AWARENESS	2377	82	08/29/91	CLS-7			3.00		C
CLS-6 GROUP WEEKLY ES&H MEETING	5525	1	08/29/91	CLS-7			1.50		C
ANOS COLLOQUIUM-S. HECKER-CLS	5620	2	08/21/91	CLS-6			1.50		C
R SAFETY UPDATE	3565	4	08/15/91	CLS-7			1.00		C
R - ADULT	3583	543	08/09/91	CLS-7			4.00		C
X-RAY SAFETY-INDUSTRIAL	2383	11	06/24/91	CLS-7			4.00		C
ES&H MEETING-CLS DIVISION	5565	1	05/09/91	CLS-7			1.50		C
LASER SAFETY COURSE--CLS DIVISION	5534	1	03/27/91	CLS-7	7950	X776	8.00		C
FIRE EXTINGUISHER TRAINING: FIGHT OR FLIGHT	5224	2	02/28/91	CLS-7	5750		.50		C
ES&H EMPLOYEE PARTICIPATION PACKET	4459	149	01/23/91	CLS-6			.50		C
CPR - COMMUNITY	3582	44	07/13/90	CLS-7	5750		8.00		C
ANNUAL SECURITY REFRESHER	1425	42	04/01/90	CLS-7	6613		2.00		C
NEW EMPLOYEE SAFETY ORIENTATION	793	88	03/30/90	CLS-7	5750		1.50		C
HAZ/COM TRAINING - INTRODUCTION	2398	36	03/12/90	CLS-7	5750		2.00		C

*ST = status
*C = complete

DIVISION : 79
GROUP : 7902 CLS-2
Z-NO/NAME: 083266 TENNANT ROGER A

COURSE TITLE	COURSE NUMBER	SESSION NUMBER	SESSION DATE	GROUP CHARGED	COST CNTR	PGM CODE	HOURS	FEE	ST
SUBSTANCE ABUSE AWARENESS FOR EMPLOYEES - CLS PERSONNEL	7767	1	02/19/93	CLS-2	6303	X597	2.00		C
G.E.T. - OSHA RIGHTS AND REGULATIONS	5543	91	01/04/93	CLS-2			.50		C
G.E.T. - LOCKOUT/TAGOUT TRAINING FOR AFFECTED EMPLOYEES	5541	91	01/04/93	CLS-2			.25		C
G.E.T. - RADIATION PROTECTION TRAINING FOR THE OCCUPATIONAL WOR	5547	91	01/04/93	CLS-2			1.00		C
G.E.T. - OSHA RIGHTS AND REGULATIONS	5543	80	10/13/92	CLS-2			.50		C
G.E.T. - RADIATION PROTECTION TRAINING FOR THE OCCUPATIONAL WOR	5547	80	10/13/92	CLS-2			1.00		C
G.E.T. - LOCKOUT/TAGOUT TRAINING FOR AFFECTED EMPLOYEES	5541	80	10/13/92	CLS-2			.25		C
PRESSURE SAFETY SEMINAR FOR ENGINEERS	3573	2	06/11/92	CLS-2			8.00		C
LASER SAFETY UPDATE	3565	5	09/12/91	CLS-3			1.00		C
HAZARDOUS WASTE GENERATOR TRAINING - HSE	4419	159	08/28/91	CLS-3			3.00		C
ES&H GROUP BREIFING - CLS-3	5520	1	08/02/91	CLS-3			2.50		C
ELECTRICAL SAFETY AWARENESS	2377	78	07/17/91	CLS-3			3.00		C
GROUP SPECIFIC HAZARDOUS WASTE TRAINING	5552	1	06/14/91	CLS-3			.50		C
HAZARD COMMUNICATION INTRODUCTION	2398	131	05/24/91	CLS-3	5750		2.00		C
LASER SAFETY ORIENTATION	670	39	05/23/91	CLS-3			2.50		C
PRESSURE SAFETY: COMPRESSED GAS SYSTEMS	5264	1	03/28/91	CLS-3			4.00		C
SPILL PREVENTION CONTROL AND COUNTERMEASURES (VIDEO TAPE)	5309	1	02/06/91	CLS-3			.15		C
ES&H EMPLOYEE PARTICIPATION PACKET	4459	149	01/23/91	CLS-2			.50		C
SUBSTANCE ABUSE AWARENESS	4766	1	11/07/90	CLS-5	7905		.19		C
'HINE SHOP OVERVIEW	7649	1	11/07/90	CLS-2	7905	XG79	2.00		C
.JSUAL OCCURRENCES REPORT	7650	1	05/02/90	CLS-2			2.00		C
ANNUAL SECURITY REFRESHER	1425	42	04/01/90	CLS-5	6613		2.00		C
HAZ/COM TRAINING - INTRODUCTION	2398	36	03/12/90	CLS-5	5750		2.00		C
MACINTOSH: MICROSOFT WORD BEGINNING	2716	2	10/24/89	CLS-5	6303		12.00	245.00	C
RCRA REGS (GENERATOR REQUIREMENTS)	3597	18	10/04/89	CLS-5	5750		1.00		C
PRESSURE SEMINAR FOR ENGINEERS (PS-04)	3573	1	03/02/89	CLS-5	5750		8.00		C
PRESSURE SAFETY ORIENTATION (PS-01)	3570	1	02/28/89	CLS-5	5750		5.00		C
LASER SAFETY UPDATE	3565	1	02/01/89	CLS-5	5701		1.00		C
ELECTRICAL SAFETY AWARENESS	2377	5	06/09/88	CLS-5	5750		2.50		C
ELECTRICAL SAFETY AWARENESS	2377	22	06/09/88	CLS-5	5750		2.50		C
CHEMICAL HAZARD TRNING	861	10	03/02/88	CLS-5	5750		1.00		C
NON-DISCLOSURE SECURITY AGREEMENT	1427	36	07/01/87	CLS-5	6613		1.00		C
SECURITY REFRESHER TRNG	1540	96	06/03/87	CLS-5	7800				C
INITIAL NEW HIRE INDOCTRINATION	1424	3	01/01/87	CLS-5	6613		1.00		C
CORROSION ENGINEERING	291	1	07/17/85	AT-4	6303		24.00	450.00	C
CORROSION ENGINEERING	291	2	07/16/84	AT-4	6303		24.00	250.00	C
CPR	674	60	03/06/84	AT-4	5700		2.00	56.00	C
HAZARDOUS MATERIAL TRAIN	1283	6	05/13/83	9708	6200				C
PROJECT MANAGEMENT	24	6	10/27/81	8201	0000			192.00	C

DIVISION : 79
GROUP : 7906 CLS-6
Z-NO/NAME: 098271 KANG MICHAEL

COURSE TITLE	COURSE NUMBER	SESSION NUMBER	SESSION DATE	GROUP CHARGED	COST CNTR	PGM CODE	HOURS	FEE	ST
SEXUAL HARASSMENT PREVENTION TRAINING FOR EMPLOYEES	5429	31	02/18/93	CLS-6			1.50		C
G.E.T. - OSHA RIGHTS AND REGULATIONS	5543	81	10/19/92	CLS-6			.50		C
G.E.T. - RADIATION PROTECTION TRAINING FOR THE OCCUPATIONAL WOR	5547	81	10/19/92	CLS-6			1.00		C
G.E.T. - LOCKOUT/TAGOUT TRAINING FOR AFFECTED EMPLOYEES	5541	81	10/19/92	CLS-6			.25		C
CPR - ADULT	3583	849	05/14/92	CLS-6			4.00		C
PRESSURE SAFETY ORIENTATION	769	20	03/05/92	CLS-6			4.00		C
CLS-6 SAFETY MEETING	6172	5	12/05/91	CLS-6			1.00		C
ELECTRICAL SAFETY AWARENESS	2377	90	11/05/91	CLS-6			3.00		C
HAZARDOUS WASTE GENERATOR TRAINING - HSE	4419	173	11/04/91	CLS-6			3.00		C
CLS-6 GROUP WEEKLY ES&H MEETING	5525	4	10/24/91	CLS-6			1.50		C
CLS-6 SAFETY MEETING	6172	1	10/10/91	CLS-6			1.00		C
CLS-6 SAFETY MEETING	6172	4	10/03/91	CLS-6			1.00		C
CLS-6 SAFETY MEETING	6172	2	09/19/91	CLS-6			1.00		C
CLS-6 GROUP WEEKLY ES&H MEETING	5525	5	09/12/91	CLS-6			1.50		C
CPR - ADULT	3583	525	08/23/91	CLS-7			4.00		C
ALL HANDS COLLOQUIUM-S. HECKER-CLS	5620	1	08/21/91	CLS-7	7950	X776	1.50		C
ALL HANDS COLLOQUIUM-S. HECKER-CLS	5620	2	08/21/91	CLS-6			1.50		C
LASER SAFETY UPDATE	3565	4	08/15/91	CLS-7			1.00		C
X-RAY SAFETY-INDUSTRIAL	2383	15	07/26/91	CLS-7			4.00		C
E[illegible] MEETING-CLS DIVISION	5565	1	05/09/91	CLS-7			1.50		C
SAFETY COURSE--CLS DIVISION	5534	1	03/27/91	CLS-7	7950	X776	8.00		C
EXTINGUISHER TRAINING: FIGHT OR FLIGHT	5224	2	02/28/91	CLS-6	5750		.50		C
ES&H EMPLOYEE PARTICIPATION PACKET	4459	149	01/23/91	CLS-6			.50		C
CPR - ADULT	3583	352	08/17/90	CLS-7	5750		4.00		C
ANNUAL SECURITY REFRESHER	1425	42	04/01/90	CLS-7	6613		2.00		C
HAZ/COM TRAINING - INTRODUCTION	2398	36	03/12/90	CLS-7	5750		2.00		C
RCRA REGS (GENERATOR REQUIREMENTS)	3597	16	10/12/89	CLS-7	5750		1.00		C
CPR - COMMUNITY	3582	11	07/27/89	CLS-7	5750		8.00		C
PROJECT MANAGEMENT	3184	1	10/24/88	CLS-7	7907		28.00		C
HP CHECKLIST AND ORIENTATION	2389	23	10/12/88	CLS-7	5703		1.50		C
ELECTRICAL SAFETY AWARENESS	2377	14	10/06/88	CLS-7	5750		2.50		C
LASER SAFETY ORIENTATION	670	3	05/24/88	CLS-7	5750		2.50		C
CHEMICAL HAZARD TRNING	861	11	03/23/88	CLS-7	5750		1.00		C
CPR	895	129	08/28/87	CLS-7	5700				C
CPR REFRESHER	686	121	07/23/87	CLS-7	5700		4.00		C
SECURITY REFRESHER TRNG	1540	97	06/04/87	CLS-7	7800				C
INITIAL NEW HIRE INDOCTRINATION	1424	3	01/01/87	CLS-7	6613		1.00		C
HAZ FLOURINE + HYDRO FLOR	782	1	09/09/86	CLS-7	5700				C
R REFRESHER	686	72	06/24/86	CLS-7	5700		4.00		C
PR	1871	12	06/25/85	8707	8700		2.00		C
NON-DISCLOSURE SECURITY AGREEMENT	1427	9	04/12/85	8707	6613		1.00		C
TRAVEL FOR TRAINING	1867	36	04/02/85	8707	8700			823.00	C
ELECTRICAL SAFETY	787	16	01/08/85	8707	5700				C
EXCELL	31	9	10/01/84	8707	0000			287.00	C

DIVISION : 79
GROUP : 7904 CLS-4
Z-NO/NAME: 085706 ANDERSON GRAYDON K

COURSE TITLE	COURSE NUMBER	SESSION NUMBER	SESSION DATE	GROUP CHARGED	COST CNTR	PGM CODE	HOURS	FEE	ST
SEXUAL HARASSMENT PREVENTION TRAINING FOR EMPLOYEES	5429	36	04/01/93	CLS-4			1.50		C
G.E.T. - RADIATION PROTECTION TRAINING FOR THE OCCUPATIONAL WOR	5547	81	10/19/92	CLS-4			1.00		C
G.E.T. - OSHA RIGHTS AND REGULATIONS	5543	81	10/19/92	CLS-4			.50		C
G.E.T. - LOCKOUT/TAGOUT TRAINING FOR AFFECTED EMPLOYEES	5541	81	10/19/92	CLS-4			.25		C
ELECTRICAL SAFETY AWARENESS	2377	113	08/27/92	CLS-4			3.00		C
HAZARDOUS WASTE GENERATOR TRAINING - HSE	4419	191	04/07/92	CLS-4			3.00		C
PRESSURE SAFETY ORIENTATION	769	20	03/05/92	CLS-4			4.00		C
LASER SAFETY ORIENTATION	670	44	10/02/91	CLS-3			2.50		C
INCIDENTAL CRANE CERTIFIED	5650	2	08/29/91	CLS-4			1.00		C
CRANE SAFETY: INCIDENTAL OPERATORS	2396	39	08/29/91	CLS-3			4.00		C
RADIOLOGICALLY CONTROLLED AREA ACCESS	5621	1	08/05/91	CLS-3	7950	X776	1.00		C
ES&H GROUP BREIFING - CLS-3	5520	1	08/02/91	CLS-3			2.50		C
ES&H EMPLOYEE PARTICIPATION PACKET	4459	149	01/23/91	CLS-4			.50		C
BACK CARE CLINIC	747	35	06/01/90	CLS-3	5750		2.00		C
SAFETY MEETING - CLS-3	4470	1	05/04/90	CLS-3	5750		.50		C
ANNUAL SECURITY REFRESHER	1425	42	04/01/90	CLS-3	6613		2.00		C
HAZ/COM TRAINING - INTRODUCTION	2398	47	03/05/90	CLS-3	5750		2.00		C
CHEMICAL HAZARD TRNING	861	11	03/23/88	CLS-3	5750		1.00		C
SECURITY REFRESHER TRNG	1540	104	08/25/87	CLS-3	7800				C
"N-DISCLOSURE SECURITY AGREEMENT	1427	36	07/01/87	CLS-3	6613		1.00		C
IAL NEW HIRE INDOCTRINATION	1424	3	01/01/87	CLS-3	6613		1.00		C
TRATEGIC PLANNING	75	27	08/13/86	CLS-3	6303		1.00	471.00	C
AAR TRAINING	927	1	07/22/85	CLS-3	5900				C
CPR REFRESHER	699	43	04/19/85	CLS-3	5700				C
CPR REFRESHER	699	49	01/16/84	CLS-3	5700				C
AFFIRMATIVE ACTION REP TR	947	3	11/22/83	CLS-3	5900				
CPR	1551	1	03/07/83	CLS-3	7900		2.00	36.00	
CPR	674	4	02/07/83	CLS-3	5700		2.00	50.00	

DIVISION : 79
GROUP : 7902 CLS-2
Z-NO/NAME: 088372 VARGAS RUDOLPH

COURSE TITLE	COURSE NUMBER	SESSION NUMBER	SESSION DATE	GROUP CHARGED	COST CNTR	PGM CODE	HOURS	FEE	ST
SUBSTANCE ABUSE AWARENESS FOR EMPLOYEES - CLS PERSONNEL	7767	1	02/19/93	CLS-2	6303	X597	2.00		C
G.E.T. - RADIATION PROTECTION TRAINING FOR THE OCCUPATIONAL WOR	5547	91	01/04/93	CLS-2			1.00		C
G.E.T. - LOCKOUT/TAGOUT TRAINING FOR AFFECTED EMPLOYEES	5541	91	01/04/93	CLS-2			.25		C
G.E.T. - OSHA RIGHTS AND REGULATIONS	5543	91	01/04/93	CLS-2			.50		C
G.E.T. - OSHA RIGHTS AND REGULATIONS	5543	80	10/13/92	CLS-2			.50		C
G.E.T. - LOCKOUT/TAGOUT TRAINING FOR AFFECTED EMPLOYEES	5541	80	10/13/92	CLS-2			.25		C
G.E.T. - RADIATION PROTECTION TRAINING FOR THE OCCUPATIONAL WOR	5547	80	10/13/92	CLS-2			1.00		C
RESPIRATORS: AIR-PURIFYING	3549	497	08/12/92	CLS-2			2.50		C
LOCKOUT/TAGOUT - CONTROL OF HAZARDOUS ENERGY (VIDEO)	7778	1	06/19/92	CLS-2			.50		C
LASER SAFETY UPDATE	3565	5	09/12/91	CLS-3			1.00		C
ES&H ORIENTATION FOR NEW EMPLOYEES	793	132	08/30/91	CLS-3			1.50		C
HAZARDOUS WASTE GENERATOR TRAINING - HSE	4419	159	08/28/91	CLS-3			3.00		C
CARD OF AUTHORITY - HAZARDOUS WASTE MANAGEMENT - VIDEO	4462	11	08/27/91	CLS-2			.25		C
ES&H GROUP BREIFING - CLS-3	5520	1	08/02/91	CLS-3			2.50		C
RESPIRATORS: AIR-PURIFYING	3549	286	07/22/91	CLS-3			2.50		C
GROUP SPECIFIC HAZARDOUS WASTE TRAINING	5552	1	06/14/91	CLS-3			.50		C
PRESSURE SAFETY ORIENTATION	769	14	05/29/91	CLS-3			4.00		C
FIRE EXTINGUISHER TRAINING: FIGHT OR FLIGHT	5224	9	02/01/91	CLS-3	5750		.50		C
ES&H EMPLOYEE PARTICIPATION PACKET	4459	149	01/23/91	CLS-2			.50		C
' TIDENTIAL CRANE SAFETY COURSE	2396	24	11/13/90	CLS-3	5750		4.00		C
.LIFT SAFETY FUNDAMENTAL	753	40	10/23/90	CLS-3	5750		1.50		C
RKLIFT CERTIFIED	5649	13	10/01/90	CLS-2			1.00		C
SAFETY MEETING - CLS-3	4470	1	05/04/90	CLS-3	5750		.50		C
FIRST AID, STANDARD	3574	72	04/16/90	CLS-3	5750		8.00		C
CPR/FIRST AID	4422	1	04/02/90	CLS-3	5750		8.00		C
ANNUAL SECURITY REFRESHER	1425	42	04/01/90	CLS-3	6613		2.00		C
HAZ/COM TRAINING - INTRODUCTION	2398	47	03/05/90	CLS-3	5750		2.00		C
BASIC ELECTRICAL HAZARDS - FILM	4474	1	01/18/90	CLS-3	5750		.50		C
ON THE SAFE SIDE - FILM	4475	1	01/18/90	CLS-3	5750		.50		C
LASER SAFETY VIDEOTAPE	794	4	01/10/90	CLS-3	5750		1.50		C
AIR PURIFYING RESPIRATORS	668	259	05/02/89	CLS-3	5750		2.00		C
OVERVIEW: SUPERVISING AT LOS ALAMOS	2916	1	05/12/88	CLS-3	6303		16.00		C
OVERVIEW:SUPERVISING AT LOS ALAMOS	2243	14	05/12/88	CLS-3	6303		14.00		C
ELECTRICAL SAFETY AWARENESS	2377	7	03/16/88	CLS-3	5750		2.50		C
NON-DISCLOSURE SECURITY AGREEMENT	1427	36	07/01/87	CLS-3	6613		1.00		C
SECURITY REFRESHER TRNG	1540	103	06/12/87	CLS-3	7800				C
CHEMICAL HAZARD TRNING	861	2	05/12/87	CLS-3	5750		1.00		C
INITIAL NEW HIRE INDOCTRINATION	1424	3	01/01/87	CLS-3	6613		1.00		C
SUPPLIED AIR BREATH CART	723	3	07/30/86	CLS-3	5700				C
LIMIT EGRESS/CONFIN SPACE	671	3	07/28/86	CLS-3	5700		2.00		C
CPR	895	97	03/26/86	CLS-3	5700				C
MEASURE WITH OSCILLOSCOPE	392	1	03/03/83	CLS-5	0000				C
CORROSION ENGINEERING	290	1	02/14/83	CLS-5	0000			250.00	C
FUND OF OPTICS FOR TECH	386	1	08/09/82	8201	0000			575.00	C
PULSE POWER	1461	1	03/10/81	8201	7700			200.00	C
GAS TUNGSTEN ARC WELDING	1054	2	01/01/80	8201	5900			355.00	C
SHIELD METAL ARC WELDING	977	2	07/01/79	8201	5900			275.00	C
ACETELYNE WELDING	978	4	05/01/79	8201	5900			150.00	C

SION : 79
JP : 7902 CLS-2
Z-NO/NAME: 088372 VARGAS RUDOLPH

COURSE TITLE	COURSE NUMBER	SESSION NUMBER	SESSION DATE	GROUP CHARGED	COST CNTR	PGM CODE	HOURS	FEE	ST
UNIFIED TECH. CONCEPTS	983	1	01/01/79	8201	5900			70.00	C

DIVISION : 79
GROUP : 7906 CLS-6
Z-NO/NAME: 111213 BECHTOLD LAURIE A

COURSE TITLE	COURSE NUMBER	SESSION NUMBER	SESSION DATE	GROUP CHARGED	COST CNTR	PGM CODE	HOURS	FEE	ST
BASIC RADIATION WORKER TRAINING	4428	80	02/05/92	HRD-5			8.00		C
PRESSURE SAFETY ORIENTATION	769	18	01/29/92	HRD-5			4.00		C
G.E.T. - CERTIFIED	5668	40	01/22/92	HRD-5			1.50		C
G.E.T. - FACILITIES	5974	17	01/22/92	HRD-5			.25		C
G.E.T. - POLICIES	5975	17	01/22/92	HRD-5			.25		C
G.E.T. - QUALITY ASSURANCE	5976	17	01/22/92	HRD-5			.25		C
HAZARD COMMUNICATION INTRODUCTION	2398	161	01/22/92	HRD-5			2.00		C
G.E.T. - ENVIRONMENT	5548	20	01/22/92	HRD-5			1.00		C
HAZARDOUS WASTE GENERATOR TRAINING - HSE	4419	176	01/22/92	HRD-5			3.00		C
G.E.T. - INDUSTRIAL HYGIENE	5545	20	01/22/92	HRD-5			1.00		C
G.E.T. - OCCUPATIONAL MEDICINE	5546	20	01/22/92	HRD-5			.50		C
G.E.T. - RADIATION SAFETY TRAINING FOR OCCUPATIONAL WORKERS	5547	20	01/22/92	HRD-5			1.00		C
G.E.T. - LOCKOUT/TAGOUT TRAINING FOR AFFECTED EMPLOYEES	5541	20	01/22/92	HRD-5			.25		C
G.E.T. - SECURITY	5977	17	01/22/92	HRD-5			.25		C
G.E.T. - SAFEGUARDS/MC&A AWARENESS	5711	17	01/22/92	HRD-5			.25		C
G.E.T. - ES&H POLICY	5542	20	01/22/92	HRD-5			.25		C
ES&H EMPLOYEE PARTICIPATION PACKET	4459	172	01/22/92	HRD-5			.50		C
G.E.T. - OSHA RIGHTS AND REGULATIONS	5543	20	01/22/92	HRD-5			.50		C
G.E.T. - INDUSTRIAL SAFETY	5540	20	01/22/92	HRD-5			.50		C
FIRE EXTINGUISHER TRAINING: FIGHT OR FLIGHT	5224	212	01/22/92	HRD-5			.50		C
G.E.T. - EMERGENCY MANAGEMENT	5544	20	01/22/92	HRD-5			.50		C

LOS ALAMOS NATIONAL LABORATORY EMPLOYEE DEVELOPMENT SYSTEM (EMPLOYEE TRANSCRIPTS) FROM: 01/01/78 TO. 06/02

DIVISION: 79; Group: 7906 CLS-6
Z-NO/NAME: 110924 HECK, HEIDI G.

COURSE TITLE	COURSE NUMBER	SESSION NUMBER	SESSION DATE	GROUP CHARGED	HOURS	S
FIRST AID: STANDARD	3574	467	10/22/92	CLS-6	8.00	
CPR-ADULT	3583	1058	10/22/92	CLS-6	4.00	
G.E.T. RADIATION TRAINING	5547	81	10/19/92	CLS-6	1.00	
G.E.T. LOCKOUT/TAGOUT TRAINING	5541	81	10/19/92	CLS-6	.25	
G.E.T. OSHA RIGHTS AND REGULATIONS	5543	81	10/19/92	CLS-6	.50	
G.E.T. ENRIRONMENT	5548	20	01/22/92	CLS-6	1.00	
G.E.T. CERTIFIED	5668	40	01/22/92	CLS-6	1.50	
G.E.T. SAFEGUARDS/MC&A AWARENESS	5711	17	01/22/92	CLS-6	.25	
G.E.T. FACILITES	5974	17	01/22/92	CLS-6	.25	
G.E.T. POLICIES	5975	17	01/22/92	CLS-6	.25	
G.E.T. QUALITY ASSURANCE	5976	17	01/22/92	CLS-6	.25	
G.E.T. SECURITY	5977	17	01/22/92	CLS-6	.25	
HAZARDOUS COMMUNICATION INTRO.	2398	161	01/22/92	CLS-6	2.00	
H.W. GENERATOR TRAINING-HSE	4419	176	01/22/92	CLS-6	3.00	
ES&H EMPLOYEE PARTICIPATION	4459	172	01/22/92	CLS-6	.50	
FIRE EXTINGUISHER TRAINING	5224	212	01/22/92	CLS-6	.50	
G.E.T. INDUSTRIAL SAFETY	5540	20	01/22/92	CLS-6	.50	
G.E.T. LOCKOUT/TAGOUT TRAINING	5541	20	01/22/92	CLS-6	.25	
G.E.T. ES&H POLICY	5542	20	01/22/92	CLS-6	.25	
G.E.T. OSHA RIGHTS AND REGULATIONS	5543	20	01/22/92	CLS-6	.50	
E.T. EMERGENCY MANAGEMENT	5544	20	01/22/92	CLS-6	.50	
.E.T. INDUSTRIAL HYGIENE	5545	20	01/22/92	CLS-6	1.00	
G.E.T. OCCUPATIONAL MEDICINE	5546	20	01/22/92	CLS-6	.50	
G.E.T. RADIATION SAFETY TRAINING	5547	20	01/22/92	CLS-6	1.00	
ES&H EMPLOYEE PARTICIPATION	4459	173	01/21/92		.50	
H.W. GENERATOR TRAINING-HSE	4419	165	11/08/91		3.00	
CLS-6 SAFETY MEETING	6172	4	10/03/91		1.00	
LASER SAFETY ORIENTATION	670	44	10/02/91		2.50	
HAZARD COMMUNICATION INTRO.	2398	141	09/27/91		2.00	
PRESSURE SAFETY ORIENTATION	769	16	09/25/91		4.00	
MERCURY SAFETY WORKSHOP PART II	6658	1	09/18/91		4.00	
MERCURY SAFETY WORKSHOP	6657	1	09/13/91		8.00	
LOCKOUT/TAGOUT PROCEDURES	5750	2	09/13/91		1.00	
SPI11 PREVENTION CONTROL	6620	1	09/13/91		2.30	
CPR ADULT	3583	547	09/13/91		4.00	
CLS-6 GROUP WEEKLY ES&H MEETING	5525	6	09/5/91	CLS-6	1.50	
ELECTRICAL SAFETY AWARENESS	2377	82	08/29/91		3.00	
CLS-6 GROUP WEEKLY ES&H MEETING	5525	1	08/29/91	CLS-6	1.50	
ES&H ORIENTATION FOR NEW EMPLOYEES	793	134	08/26/91		1.50	
ES&H EMPLOYEE PARTICIPATION	4459	92	08/15/91	CLS-7	.50	

PERMIT ATTACHMENT H

PROCEDURES FOR HANDLING IGNITABLE, REACTIVE, OR INCOMPATIBLE WASTES

Introduction

This document specifies the general procedures for the identification and handling of hazardous wastes for storage at LANL. The information in this section has been provided in accordance with the requirements of HWMR-7, Part V, 40 CFR,§ 264.17 and Part IX, 40 CFR, § 270.14(b)(9).

Waste Analysis and Handling Procedures for Storage

When chemical substances are declared to be in excess, the originating group must complete a Chemical Waste Disposal Request and send the form to the Waste Management Group (EM-7). The request shall list the chemical waste the generating group needs to dispose of, the quantity and physical form of the wastes, and other pertinent information such as the condition of the containers. Material Safety Data Sheets (MSDSs) and existing analytical data shall also be available and attached.

Using Part B of the Chemical Waste Disposal Request Form, EM-7 staff will assign a Reactivity Group Number (RGN) to each container or bottle. The EPA document, "A Method for Determining the Compatibility of Hazardous Waste," (EPA-600/2-80-076) shall serve as the basis for LANL procedure to assign RGN numbers. Additional information assigned during this review must include EPA codes and transportation information. The completed request form, container label, and MSDS/analytical data shall serve as the waste analysis record for the waste to be stored per the following segregation schemes.

Waste Segregation

To prevent adverse interactions of incompatible chemical wastes and to facilitate recycling or treatment of wastes, chemical wastes will be segregated into the following general categories:

- Organics, including solvent wastes such as acetone, benzene, and toluene.
- Corrosive acidic wastes, including organic and mineral acids.
- Corrosive caustic wastes.
- Oxidizers, such as perchloric or chromic acid, and nonacidic oxidizers, such as permanganates and

chlorates.

- Reactive metals and compounds, such as sodium, lithium hydride, and phosphorous trichloride.

- Nonreactive metals, salts, and neutral compounds, such as lead and barium salts, and cyanide or sulfide compounds (in <5 gal. quantities only).

Utilizing the RGN assigned to the container and Table A-2, an area for storage of the waste shall be assigned. The organics and oxidizers have subcategories of segregation that will be followed by packaging/compositing of wastes to ensure that potential incompatibles are not combined together.

WASTE ANALYSIS AND HANDLING PROCEDURES FOR TREATMENT AND DISPOSAL

The analysis and handling procedures for waste requiring treatment and/or disposal follows. The decision process summarized in Table H-1 shall be the basic guideline.

Definitions:

- LDR is Land Disposal Restricted. When used in this section it refers to all waste currently regulated under HWMR-7, Part VIII, 40 CFR, § 268.

- TCLP metals means those eight metals regulated under the Toxicity Characteristic Leaching Procedure.

- KOP refers to Knowledge of Process. In the case of original containers of materials, the information from the Chemical Disposal Request Form, as described earlier, is the KOP documentation. All other waste shall be documented by previous analyses or information provided by the generator.

- Composited labpack waste refers to original containers, i.e. bottles and cans of liquid hazardous waste materials (no greater than 5 gallons in size) that have been combined for the purpose of incineration.

- Coliwasa sampler also includes the use of coliwasa type sampling apparatus. Other equivalent EPA SW-846 sampling methods, such as the use of tubing or dipper, may be substituted for the coliwasa sampler.

Organic Waste

Organic waste will be split into four processing categories:

Uncomposited labpack waste, drummed material, composited labpack waste, and composited drummed waste. The following discussions treat each as a unique analysis entity.

Uncomposited Labpack Waste

These wastes are those, that due to their toxicity or their physical (solid) state, will not be composited but will be packaged in overpack containers with absorbent. The entire container is then incinerated. But since LANL's incinerator cannot generally receive such a package, most of this waste shall be shipped offsite. The packing list of bottles and cans in the overpack container shall serve as the analytical record. This listing is sufficient to allow the identification of any and all LDR waste.

Drummed Waste

Since there are very few ongoing operations at LANL that generate an organic process waste, each drum of this waste is virtually a unique entity. The exception would be those cases where we know more than one drum of waste came from the same place, e.g., 400 gallons of oil drained from the same machine reservoir. The drums shall also be sampled using a coliwasa or equivalent EPA approved sampler if liquid, or a core sampler if solid. Since this waste is destined for incineration, the following parameters must be tested for: pH, ash content, viscosity, heat value, TCLP metals, total organic halogen, total organic chlorine, sulfur, and chemical composition. This latter test will identify approximately ninety-five percent of the substances that are present in the waste.

Availability of documented KOP will determine if the organic trace analyses need to be performed. Documentation or analyses will identify the presence/absence of organic LDR compounds, trichlorofluoromethane, bromoform, dichlorodifluoromethane and ethylene dibromide. These latter four compounds are only necessary if the waste is to be incinerated onsite. The test methods are listed in Table H-3.

EM-7 shall confirm the compatibility of all wastes generated in the many laboratories at LANL before they are composited into 55-gallon or larger containers. When the composite receptacle is full, the waste shall be analyzed as described above for any large container of organic waste.

Solid organic waste shall be sampled using a core sampler or a grab sampler if the material can not be penetrated by a core sampler. Analytical parameters, frequencies, and test methods shall be the same as those outlined above for any large container of waste. Debris that is organically contaminated will be analyzed under the respective chemical category.

Composited Labpack Waste

Since all the chemicals in a composite drum are known entities, the list of chemicals and their quantity shall serve as the primary analysis record. This listing should be sufficient to allow the identification of any and all LDR waste. When the drum is full, it shall be sampled as per EPA approved methods. Since chemical composition is known, only the physical characteristics need to be calculated or analyzed for. If any physical parameters can not be calculated due to the variety of substances placed in the drum, the sample shall be analyzed for that parameter. Therefore, analysis or calculation shall provide pH, flashpoint, ash content, viscosity, heat value, total organic halogens, and total organic chlorine. The methods used for these analyses must be those specified in Table H-3. This will be done for each container of composited waste since each container is unique.

Composited Drummed Waste

Composited drummed waste are those drums of waste for which the analytical data already exists and are combined in either the TA-54, Area L storage tanks or the liquid feed tanks at the incinerator for the purposes of offsite shipment or onsite incineration. Compatibility is ensured by following the procedures described above. Chemical and physical parameters will be calculated from the existing data. If at any time calculations of physical parameters, such as heat value, are inadequate, those identified analyses will be redone. The calculations will be performed on each unique tank of waste.

Corrosive Acid Waste

Corrosive acid waste shall be handled in two primary processing categories, namely, labpack and process waste.

Labpack Waste

This wastestream consists of original containers of acid waste. The labels on the containers shall continue to serve as the primary analytical record. Those acids that can be reused by another component of LANL shall be redistributed for use as a raw material. Those acids that can not be reused will be treated by elementary neutralization either at the TA-50 Liquid Waste Treatment Plant or throughout LANL in individual laboratories.

Process Waste

There are three categories of process waste: nonroutine nonmetallic waste, nonroutine metallic waste, and routine waste.

Nonroutine nonmetallic waste which is periodically generated

throughout LANL will be analyzed for pH, the TCLP metals, nickel and thallium. This allows confirmation of the presence/absence of LDR material. The test methods to be employed are listed in Table H-3. Sampling shall be performed using a coliwasa or equivalent sampler. Because this is defined as a nonroutine wastestream, every unique drum or batch must be sampled.

Nonroutine metallic waste is generated primarily by LANL's electroplating operations. At the time of generation, these wastes are identified by the generator as containing heavy metals. The generator may also provide the approximate metal concentration, if the information is available. This waste will be analyzed for pH, TCLP metals, nickel and thallium. This will allow confirmation of the presence of LDR material and establish the parameters that are analyzed for at the completion of the planned treatment. The test methods employed will be those listed in Table H-3. Sampling will be performed using a coliwasa or equivalent sampler. Because this is identified as a nonroutine wastestream, every unique drum or batch will be sampled.

There are five routinely generated acidic wastestreams at Los Alamos: nonmetallic nitric acid, nonmetallic sulfuric acid, nonmetallic acid stream, metallic ferric chloride, and metallic ammonium persulfate. Each of these streams has a confirmed basis for RCRA regulation which establishes the parameters of concern for treatment. All three of the nonmetallic acid streams shall be routinely analyzed for pH. The metallic ferric chloride will be analyzed for pH, chromium, silver, lead, and copper. The metallic ammonium persulfate will be analyzed for pH, lead, and mercury. Annually, all of these streams shall be reevaluated for pH, TCLP metals, nickel, and thallium. This allows confirmation that the waste has not changed in composition and what LDR components are present. Sampling is conducted with a coliwasa or equivalent sampler. All test methods shall be those listed in Table H-3.

If a nonroutine wastestream becomes a routine waste or a new wastestream is identified, it will follow the pattern established in the above paragraph. Routine testing parameters must be established and reverified on an annual basis.

Corrosive Basic Waste

Corrosive basic waste is split into two processing categories: labpack waste and process waste.

Labpack Waste

This wastestream consists of original containers of basic waste. The labels on the containers shall serve as the primary analytical record. Those bases that can be reused by another

component of LANL will be redistributed for use as a raw material. Those bases that can not be reused will generally be treated by elementary neutralization either at the TA-50 Liquid Waste Treatment Plant or throughout LANL in individual laboratories.

Process Waste

There are three categories of process waste: nonroutine nonmetallic waste, nonroutine metallic waste, and routine waste. Since documented KOP negates the concern for organic LDR compounds, references to LDR in this section shall refer only to inorganic constituents.

Nonroutine nonmetallic waste is periodically generated throughout LANL. This waste will be analyzed for pH, the TCLP metals, nickel and thallium. This allows confirmation of the presence of LDR material. The test methods employed are listed in Table H-3. Sampling shall be performed using a coliwasa or equivalent sampler. Because this is defined as a nonroutine wastestream, every unique drum or batch will be sampled.

Nonroutine metallic waste is generated primarily by LANL's electroplating operations. At the time of generation, these wastes are identified by the generator as containing heavy metals. This waste will be analyzed for pH, TCLP metals, nickel, thallium, and cyanide. This procedure allows confirmation of the presence of LDR material and establishes the parameters that are analyzed for at the completion of treatment. The test methods employed shall be those listed in Table H-3. Sampling will be performed using an EPA approved sampling method. Because this is defined as a nonroutine wastestream, every unique drum or batch shall be sampled.

There are three routinely generated corrosive base process wastestreams at Los Alamos: ammonium etchant, "Replenisher" solution, and "Cuposit." The Replenisher and Cuposit are trade names. The ammonium etchant will be analyzed for pH, copper, and lead. The Replenisher will be analyzed for pH and lead. The Cuposit shall be analyzed for pH and mercury. Annually, these wastestreams shall all be reevaluated for pH, TCLP metals, nickel, and thallium. This allows confirmation of the presence of LDR substances and that the waste has not changed in composition. Sampling will be performed with a coliwasa or equivalent sampler. Test methods used shall be those listed in Table A-3.

If a nonroutine wastestream becomes a routine waste or a new wastestream is identified, it will follow the pattern established in the above paragraphs. Routine testing parameters shall be established and reverified on an annual basis.

Oxidizer Waste

Oxidizer waste is split into two processing categories: acid waste (already discussed above), and uncomposited labpack waste.

Oxidizer labpack waste must not be composited due to the high fire risk of doing so. They shall be packaged in overpack containers with absorbent. The entire container is then incinerated. But since LANL's incinerator cannot generally receive such a package; most of this waste shall be shipped offsite. The packing list of bottles and cans in the overpack container will serve as the analytical record. This listing should be sufficient to allow the identification of any and all LDR waste.

Reactive Wastes

Reactive waste has only two processing categories: uncomposited labpack waste and routine process waste.

Uncomposited Labpack Waste

Reactive labpack wastes must not be composited due to the high fire and explosion risk of doing so. They shall be packaged in overpack containers with absorbent. The entire container is then incinerated. Since LANL's incinerator cannot generally receive such a package; most of this waste shall be shipped offsite. The packing list of bottles and cans in the overpack container will serve as the analytical record. This listing is sufficient to allow the identification of any and all LDR waste.

Process Waste

The only ongoing operation at LANL that generates a reactive process waste is the machining operations. Periodically, the machinists are required to work with lithium hydride and to a lesser degree lithium metal. This results in drums of lithium hydride dust and lithium chips, respectively. Process knowledge and the isolation of these operations when they do occur shall serve as the analytical record for this wastestream.

If large quantities of reactive waste should be produced elsewhere in LANL, documented process knowledge shall also be used as the analytical record.

Inorganic Wastes

Inorganic waste is split into two processing categories: uncomposited labpack waste and process waste.

Uncomposited Labpack Waste

Since these wastes are generally solid material, they do not lend themselves to compositing. Uncomposited labpack wastes will be packaged in overpack containers with absorbent. The entire container shall then be destined for offsite land disposal. The packing list of bottles and cans in the overpack container shall serve as the analytical record. This listing is sufficient to allow the identification of any and all LDR waste.

Process Waste

Four categories of inorganic process waste exist: liquid waste, primary metal waste, nonroutine solid waste, and routine solid waste. Since inorganic liquid waste is generally acidic or basic it shall be treated under the scenarios described above.

Process knowledge is considered adequate for the further treatment/disposal/recycle of wastestreams such as lead and mercury. In both cases the metal is available as a hazardous waste and that knowledge alone should suffice to allow for proper storage, treatment, and disposal.

Nonroutine solid waste which is periodically generated throughout LANL shall be analyzed for TCLP metals, nickel, and thallium. This will allow confirmation of the presence of inorganic LDR material. The absence of organic LDR will be established by either documented KOP or analyses. The test methods employed shall be those listed in Table H-3. Sampling shall be performed using a core sampler if possible or a grab sampler if it is not possible to penetrate the waste with a core sampler. Because this is defined as a nonroutine wastestream, every unique drum or batch will be sampled.

There is one routinely generated inorganic solid waste at LANL. It is the barium contaminated sand from the explosives burning operation. Barium is the only established parameter of concern for treatment and therefore is the only parameter routinely analyzed for. Annually, a sample will be analyzed for the other listed metals. Sampling will be conducted with a core sampler. Test methods are shall be those listed in Table H-3.

If a nonroutine wastestream becomes a routine waste or a new wastestream is identified, it will follow the pattern established in the above paragraph. Routine testing parameters will be established and reverified on an annual basis.

Explosives Waste

Due to the limited number of areas producing explosives waste and the safety problems associated with analyzing explosives waste, process knowledge of the waste sent for treatment by open burning

or open detonation shall be the waste analysis record. Open burning/open detonation is conducted under interim status per HWMR-7, Part VI, Section 265.382.

Contaminated Solid Waste

The waste covered by this category is generally classified as debris. Contaminated soil shall be addressed under the respective chemical category as outlined in the above sections. The contaminant of concern is known for all waste in this category but the substrate can not be readily analyzed. Therefore, until the item in question is cleaned it must be treated as a hazardous waste. The types of waste covered by this provision include tanks and rags.

Waste Treatment Residuals

Waste treatment residuals are the liquid and solid wastestreams resulting from the treatment of a hazardous waste, such as: the treated liquid and precipitate from chemical treatment operations at either TA-50 or TA-54 and the scrubber water and ash from the incinerator. Barium contaminated sand is also a treatment residue but because it receives further chemical treatment it is treated as an uncomposited labpack waste.

The liquid from chemical treatment operations shall be tested to insure that (a) treatment is complete and (b) remaining chemical concentrations are within the discharge guidelines established under the NPDES permit for the TA-50 radioactive treatment system. If documented KOP can not exclude the presence of F-listed solvents, then each batch of treatment supernate must be tested for the compounds listed in HWMR-7, Part II, §261.3(a).2.iv.A and B.

Samples from the Batch Waste Treatment Unit shall be taken from a sampling loop. Samples from the treatment tanks at TA-54 will be taken by either coliwasa (or equivalent) or grab sample. Test methods to be used are those provided in Table H-3. The scrubber water from the incinerator will always be within the discharge guidelines established under the NPDES permit for the TA-50 radioactive treatment system thereby negating chemical analysis. The scrubber shall be analyzed annually to verify this.

Solids from the chemical treatment operations and the ash from the incinerator shall be tested for the TCLP metals that were established to be present before treatment. As necessary, these wastes shall then be cemented or otherwise solidified. The solidified matrix shall again be sampled by removing a sample from the mixture before curing. After curing, it should be tested for the same TCLP metals. Assuming there is no listed materials present, this would allow a determination to be made as to whether the waste remained a hazardous waste or not. This

procedure shall be followed for each batch of solids requiring processing.

Unknown Material

Since occasionally chemicals of an unknown nature require disposal, these wastes shall be handled on a case-by-case basis. The individual waste may be tentatively characterized by knowledge of the operations and activities that were performed in the specific area in which the waste was generated. This information shall be used to restrict the choices of initial waste analysis to a small population of chemicals.

For purposes of managing unknown wastes a small volume is defined at LANL as less than one liquid gallon (or approximately four liters). The rationale for the small volume designation is that this is the minimum quantity of sample which is needed to test if the waste is hazardous. At and below this limit the sample is actually consumed in the analytical procedure. Small volumes of unknown wastes shall be analyzed for pH, flashpoint, and reactivity. This will allow the material to be categorized for further handling.

Volumes greater than one gallon or four liters of a single unknown waste will require a more detailed analytical scheme. These wastes shall be tested for hazardous waste characteristics and any other characteristics indicated by the initial data gathered on the material. Sufficient detail must be reported to allow the assignment of the proper EPA Hazardous Waste Number to the waste.

TABLE H-1
WASTESTREAMS, ANALYTICAL PARAMETERS, AND RATIONALE

Wastestream	Analytical Parameters
Organic Waste	
- Uncomposited labpack	Packing list
- Drummed	pH, TCLP metals, TOX, TOC, ash content viscosity, heat value, sulfur, chemica composition
- Composited labpacks and drums	List of chemicals, pH, flashpoint, ash content, viscosity, heat value, TOX, TO
Corrosive Acid	
- Labpack	pH, as necessary
- Nonroutine nonmetallic process waste	pH, TCLP metals, nickel, thallium
- Nonroutine metallic process waste	pH, TCLP metals, nickel, thallium
- Routine nonmetallic process waste	pH
- Ferric chloride	pH, chromium, silver, lead, copper
- Ammonium persulfate	pH, lead, mercury
Corrosive Base	
- Labpack	pH, as necessary
- Nonroutine nonmetallic process waste	pH, TCLP metals, nickel, thallium
- Nonroutine metallic process waste	pH, TCLP metals, nickel, thallium
- Ammonium etchant	pH, copper, lead
- "Replenisher"	pH, lead
- "Cuposit"	pH, mercury
Oxidizer	
- Labpacks	Packing list
Reactive	
- Labpacks	Packing list
- Process waste	Knowledge of process

Wastestream	Analytical Parameters
Inorganic	
- Labpack	Packing list
- Primary metals	Knowledge of process
- Nonroutine solid	TCLP metals, nickel, thallium
- Barium sand	Barium
Explosives	Knowledge of process
Contaminated Debris	Knowledge of process
Waste Treatment Residues	
- Chemical treatment liquids/solids	Previously established parameters
- Incinerator ash	Previously established parameters
- Incinerator scrubber water	Knowledge of process
Unknowns	
- Small volume (<1 gal.)	pH, flashpoint, reactivity
- Large volume	All parameters necessary to identify waste completely

TABLE H-2
PACKAGING SEGREGATION SCHEME

STORAGE CATEGORY	PACKAGING CATEGORY	RNG
Organics (1)	A	4, 5, 9, 13, 14, 16, 17, 19, 26, 29, 31, 32, 101
	B	6, 7, 8, 27, 28
	C	12, 20
	D	34, 18
Oxidizers (2)	A	2
	B	104
	C	30
Acids (3)	N/A	1, 3
Bases (4)	N/A	10, 11, 33, 105
Reactives (5)	N/A	21, 22, 25, 102, 107 - ALL STORED INDIVIDUALLY - NO COMBINING ALLOWED
Nonreactive Metals (6)	N/A	11, 15, 23, 24, 33 - 11 and 33 would only be allowed in labpack, solid quantities
Others		The following must be evaluated on a case-by-case basis to determine which of the above categories is appropriate: 25, 102, 103.

TABLE H-3
WASTE ANALYSIS PARAMETERS AND TEST METHODS

Parameter	Test Method	Reference [1]
Ignitability	Pensky-Martens Closed-Cup Method	(L) SW1010 (L) ASTM D93-80
Reactivity	Numerous methods and tests[2]	(L,S) SW Section 2.1.3
pH	Electrometric	(L) SW9040
TCLP	TCLP Extraction[3] and Graphite Furnace AA Spectroscopy	(L,S) SW1310
Arsenic0		(L) SW7060
Barium		(L) SW7081, SW7080
Cadmium		(L) SW7131, SW7130
Chromium		(L) SW7191, SW7190
Lead		(L) SW7421, SW7420
Selenium		(L) SW7740
Silver		(L) SW7761, SW7760
Mercury	TCLP Extraction[3] and Manual Cold Vapor Technique	(L,S) SW1310
Organochlorine Pesticides	TCLP Extraction[3] and Gas Chromatography	(L) SW8080
Chlorinated Herbicides		(L) SW8150
Toxicity Characteristic Leaching Procedure (TCLP)		(L,S) 40 CFR Part 268, Appendix I
Chemical Composition	95% organic composition by GC/FID	(L) SW8100

TABLE H-3 (CONT)
WASTE ANALYSIS PARAMETERS AND TEST METHODS

Parameter	Test Method	Reference [1]
Trace Organic Analysis	Any of the following:	
	Volatile organic compounds-GC/MS	(L) SW8240
	Semi-volatile organic compounds-GC/MS	
	-Packed column	(L) SW8250
	-Capillary column	(L) SW8270
Heat Value	Bomb calorimeter	(L) A006, ASTM D240
Organic Chlorine	Halide titration of combustion residue	(L,S) A004, ASTM D2361
Ash Content	Residue after combustion in muffle furnace	(L) A001, ASTM D482 (L) A001, ASTM D3174
Cyanide-Free and Total	Distillation and colorimetric (UV)	(L) SW9012
Chrome	Colorimetric method for hexavalent chromium	(L) SW7196
Sulfide	Colorimetric titration	(L) SW9030

TABLE H-3 (CONT)
WASTE ANALYSIS PARAMETERS AND TEST METHODS

Parameter	Test Method	Reference [1]
Total Metals	Digestion and inductively coupled plasma method	SW3020
Arsenic		(L) SW6010
Barium		(L) SW6010
Beryllium		(L) SW6010
Cadmium		(L) SW6010
Chromium		(L) SW6010
Lead		(L) SW6010
Nickel		(L) SW6010
Selenium		(L) SW6010
Silver		(L) SW6010
Thallium		(L) SW6010
Zinc		(L) SW6010
Mercury	Manual cold vapor technique (S) SW7471	(L) SW7470
Free Liquids	Paint filter liquids test	(S) SW9095

(1) "A" refers to Sampling and Analysis Methods for Hazardous Waste Combustion, EPA-600/8-84-002, February 1984.
"ASTM" refers to American Society for Testing Material Standards.
"SW" refers to Test Methods for Evaluating Solid Waste, Physical/Chemical Methods, 3rd Edition, EPA, November 1986.
"L" refers to liquid waste.
"S" refers to solid waste.

(2) Methods for cyanide and sulfide gas generation are pending. SW-846 methods will be used when they become available. Methods recommended by EPA will be used in interim.

(3) If TCLP and other analyses do not permit identification of an unknown chemical waste, digested metal samples (per SW3020) will be analyzed for the metals noted.

PERMIT ATTACHMENT I

REQUIRED EQUIPMENT AND DIAGNOSTIC EQUIPMENT

REQUIRED EQUIPMENT:

At a minimum, LANL shall provide the RD&D PBR/SDP activity with the equipment set forth in the emergency response plan, included herein as Attachment J; and the PBR/SDP unit as described in Attachment B.

Testing and Maintenance of Equipment:

LANL shall test and maintain the equipment specified in the previous permit condition necessary to assure its proper operation in time of emergency.

Access to communication or alarm system

LANL shall maintain access to the communications or alarm systems as presented in Attachment D in accordance with the requirements of HWMR-7, Part V, § 264.34.

DIAGNOSTIC EQUIPMENT

Techniques used to observe gas effluent from the PBR/SDP treatment unit may include mass spectrometry (MS), gas chromatography (GC), infrared absorption spectroscopy (IR), and ultraviolet (UV) absorption spectroscopy.

Mass Spectrometry (MS)

When a gas sample (at ambient pressure) is fed to the MS, it flows through a differentially pumped pair of orifice plates, such that the pressure in the ion source of the MS is about 10^{-3} torr. The MS is a UTI 100C quadrupole filter, with a closed ion source. The instrument is computer-controlled via a Spectralink interface.

Mass spectrometry presents many difficulties in the identification and quantification of species. For a moderate resolution system, the dynamic range of the electron multiplier is such that most species cannot be observed at levels below 10 - 1200 ppm, even when the ion in question is virtually absent in the background. Then there is the problem of fragmentation, in which several parent molecules may give rise to the same ion, and interference, in which two species may give rise to ions of the same mass. For example, CO cannot be detected in the presence of excess N_2 since both give mainly ions of m/e=28. Given these limitations, MS so far has not been able to quantify the species

produced in the PBR and SDP, except for the major species such as O_2, CO_2, and H_2O, which may be more easily observed by other techniques. Thus, the MS technique is shown to provide evidence for the most abundant reaction products, which can then be quantified by other techniques.

The MS instrument will only be operated intermittently during the RD&D experiments.

Gas Chromatography (GC)

The GC instrument is a Perkin-Elmer Sigma 2000, equipped with both a flame ionization detector (FID) and an electron capture detector (ECD). The flow from the column is split so that both detectors may be used simultaneously. The virtue of this arrangement is that the detectors have very specific sensitivities; the FID primarily detects hydrocarbons, while the ECD detects mainly chlorine-containing and other electronegative species.

The GC column used is a VOCOL (Supelco) wide bore capillary column (60 meters long, 0.75 millimeters inner diameter, 1.5 µm film thickness). The wide bore allows large sample sizes (500 µl) while maintaining the capillary column advantage of good separations with short retention times. The VOCOL column is the one used in EPA method 601, used for analyzing "purgeable halocarbons", which include all of the chlorocarbons likely to be produced in the PBR destruction of chlorinated organics. Using temperature programming, it will also be possible with the VOCOL column to analyze for unburned hydrocarbon species, although the peaks are not always well resolved for the smallest molecules. Thus, the column is kept at low temperature for a few minutes, during which C_1, C_2, C_3, etc., hydrocarbons elute, then the column is heated up to drive off the larger hydrocarbons and less volatile and/or more polar halocarbons (carbon tetrachloride, TCE, PCE, etc.).

The GC instrument will be operated continuously during the RD&D experiments.

Infrared (IR) Absorption Spectroscopy

A Beckman Acculab IR spectrometer and BIORAD FTIR spectrometer may also be used for monitoring of gaseous effluents from the PBR and SDP. The gas flow through the absorption cell is in series with the sampling loop on the gas chromatograph. The short path cell of the Beckman Acculab IR spectrometer and the low resolution of the instrument limit its use to measurements of major constituents only, such as carbon dioxide, carbon monoxide, and water. The FTIR, however, has a long path absorption cell and has shown the potential to identify species that are unable to be resolved by GC. Quantitative analysis is more difficult,

however, since the absorbance often is not a linear function of species concentration.

The FTIR Spectrometer will be operated continuously during the RD&D experiments.

Ultraviolet (UV) Absorption Spectroscopy

A simple UV spectrometer was constructed to measure the absorbance of the PBR effluent in the 300-350 nm region. The purpose is to look for molecular chlorine (Cl_2), which has a strong, broad absorption band peaking at about 330 nm. None of the major reaction products (CO_2, CO, H_2O, hydrocarbons) absorb light in this region, so the system should be specific and sensitive to chlorine. The system consists of a deuterium lamp to provide continuum uv light, a 1-meter long absorption cell, a collection lens, and a 1/8 meter Oriel monochromator equipped with a PIN photodiode detector. The spectral slit width of the monochromator is estimated to be about 5 nm. The monochromator may be scanned from 300-350 nm while the detector output may be recorded on a strip chart recorder.

The UV absorption cell will only be operated intermittently during the RD&D experiments.

PERMIT ATTACHMENT J

CONTINGENCY PLAN

TABLE OF CONTENTS

		Attachment Page
LIST OF ACRONYMS		iii
1.0	INTRODUCTION	J1
	1.1 SITE DESCRIPTION	J1
	1.2 WASTES TESTED IN RD&D UNIT	J1
2.0	EMERGENCY RESPONSE RESOURCES	J2
	2.1 EMERGENCY MANAGEMENT OFFICE	J2
	2.2 HEALTH AND SAFETY (HS) DIVISION RESPONSE GROUPS	J3
	2.3 ENVIRONMENTAL MANAGEMENT (EM) DIVISION RESPONSE GROUPS	J5
	2.4 OTHER LANL RESPONSE RESOURCES	J5
	2.5 CONTRACTED RESPONSE GROUPS	J6
	2.6 OUTSIDE RESPONSE AGENCIES	J6
3.0	EMERGENCY EQUIPMENT AND COMMUNICATIONS	J7
	3.1 EMERGENCY CENTRAL ALARM SYSTEM	J7
	3.2 MAINTENANCE CENTRAL ALARM SYSTEM	J8
4.0	CONTINGENCY PLAN IMPLEMENTATION	J8
	4.1 GUIDELINES FOR IMPLEMENTATION	J9
	4.2 EMERGENCY NOTIFICATION	J10
	4.3 EMERGENCY MANAGER ACTIONS	J10
5.0	SPILLS	J12
	5.1 SPILL CONTROL PROCEDURES	J13
	5.2 DECONTAMINATION VERIFICATION	J13
6.0	EXPLOSION	J13
7.0	FIRE	J14
8.0	EVACUATION	J15
	8.1 EMERGENCY PROCESS SHUTDOWN PRIOR TO EVACUATION	J15
	8.2 EVACUATION PLAN	J15
9.0	SALVAGE AND CLEANUP	J16
10.0	POST-EMERGENCY ASSESSMENT	J16
11.0	EMERGENCY RESPONSE RECORDS AND REPORTS	J17
12.0	CONTINGENCY PLAN AMENDMENT	J17
13.0	RESPONSE GROUPS AND AGENCIES	J19

LIST OF TABLES

TABLE NUMBER	TITLE
1	Response Groups and Agencies Available to the Emergency Management Office for Guidance and/or Emergency Assistance
2	Emergency Management Office Emergency Managers

LIST OF FIGURES

FIGURE NUMBER	TITLE
1	EMERGENCY NOTIFICATION STRUCTURE
2	EMERGENCY FACILITIES

LIST OF ACRONYMS

ADO	Associate Director of Operations
CAS	Central Alarm Station
CFR	Code of Federal Regulations
DOE	U.S. Department of Energy
DOT	U.S. Department of Transportation
EM	LANL Environmental Management Division
EMO	Emergency Management Office
EOC	Emergency Operations Center
EPA	U.S. Environmental Protection Agency
ERC	Emergency Response Coordinator
ERP	LANL Emergency Response Plan
HAZMAT Team	Hazardous Materials Response Team
HE	High Explosive
HS	LANL Health and Safety Division
HWMR	State of New Mexico Hazardous Waste Management Regulations
ICG	Incident Control Group
JCI	Johnson Controls World Services, Inc.
LAAO	Los Alamos Area Office
LAFD	Los Alamos Fire Department
LAMC	Los Alamos Medical Center
LANL	Los Alamos National Laboratory
LAPD	Los Alamos Police Department
M	Dynamic Testing Division
MAT	Materials Management Division
NAWAS	National Warning System
NMED	New Mexico Environment Department
NMT	Nuclear Materials Technology
OSHA	Occupational Safety and Health Administration
PA	Public Address
PTLA	Protection Technology Los Alamos
RCRA	Resource Conservation and Recovery Act
REA	Radiological Emergency Assistance
SOP	Standard Operating Procedure
TA	Technical Area
TRU	Transuranic
TSDF	Treatment, Storage, and Disposal Facility
WX	Design Engineering Division

CONTINGENCY PLAN

INTRODUCTION

The following information on Emergency Plan and Emergency Procedures has been provided by the Los Alamos National Laboratory (LANL) in accordance with the requirements of HWMR-7, Part V, 40 CFR, §§ 264.50 through 264.56 inclusive.

This document presents contingency measures for RD&D units at Los Alamos National Laboratory (LANL). This document is consistent with the LANL Emergency Response Plan (ERP), prepared by the Laboratory's Emergency Management Office (EMO). The ERP incorporates emergency planning and preparedness strategies from Department of Energy (DOE) Order 5500.3A, "Emergency Planning and Preparedness for Operational Emergencies." Although it is not anticipated that large scale emergencies will occur at the RD&D unit due to the small quantities of waste material at hand, a detailed description of emergency response capabilities and procedures is provided here. The provisions of this plan must be carried out immediately whenever there is a fire, explosion, or release of hazardous waste at an RD&D unit that could threaten human health or the environment.

1.1 Site Description

LANL and the residential communities of Los Alamos and White Rock are located in north central New Mexico on the Pajarito Plateau, situated west of the Rio Grande on the eastern slopes of the Jemez Mountains. The LANL facility covers approximately 111 square kilometers (27,500 acres) in and adjacent to Los Alamos County, and includes 34 active Technical Areas (TAs).

The principal mission of LANL is the application of science and technology to solve national problems including weapons development, energy supply, and conservation programs, while basic scientific research complements and strengthens its fundamental technical capabilities. LANL is owned by the DOE, and co-operated by DOE and the University of California.

1.2 Wastes Tested in RD&D Unit

Wastes that will be managed in the RD&D treatment unit will be halogenated and non-halogenated organic hazardous liquid wastes. The maximum amount of waste that will be managed at the unit will be 165 gallons (or three 55-gallon containers). Containers of hazardous wastes will be placed in secondary containment to minimize hazards from leakage.

Selected waste streams to be tested in the RD&D unit are described below.

Waste Description	Hazardous Waste Code(s)
Oil with 1,1,1-Trichloroethane from cleaning and repairing of vacuum pumps.	F001
Lacquer thinner from cleaning road painting equipment	D001
Mixture of acetone/ethanol from degreasing oily parts	F003

2.0 EMERGENCY RESPONSE RESOURCES

The primary resources for management of emergency incidents at LANL reside within the Emergency Management Office (EMO), which is part of the Associate Director of Operations (ADO) Office. During an emergency situation, line management (i.e., the group leader of the affected area) shall work with the designated Emergency Manager from the EMO who will assume the primary responsibility for managing emergency response operations.

Outside of LANL, contracted services and other agencies are also available for assistance during emergencies. These include the contracted services of Protection Technology Los Alamos (PTLA) (security) and Johnson Controls World Services, Inc. (maintenance), the Los Alamos Fire Department and Police Department, and the Los Alamos Medical Center.

All response groups and agencies called upon during emergencies shall be coordinated by the designated Emergency Manager. The emergency notification procedure is illustrated on Figure 1. The responsibilities and/or assistance available from the response groups/agencies are listed in Table 1 and discussed briefly in the following sections.

2.1 Emergency Management Office (EMO)

The Director of LANL shall delegate the authority and responsibility for administering and implementing the Laboratory's emergency management program to the ADO. Since the EMO is included within the ADO office the EMO shallcoordinate and issue the Laboratory's Emergency Response Plan and provide response coordination for emergencies. The EMO shall also provide a 24-hour Emergency Manager to respond to emergencies,

and an Emergency Response Coordinator (ERC) to coordinate Health and Safety and Environmental Management personnel and resources. Additionally, the EMO shall maintain the Emergency Operation Center (EOC) in a ready condition, should the center be required.

An Emergency Manager and an ERC will respond to emergency incidents involving the release of waste to the environment, including spills, fires, or explosions. The Emergency Manager will initially assess the possible hazards to human health or the environment, and use whatever response group(s) or emergency equipment needed to control and contain the waste. In the event of an emergency, the Emergency Manager shall become the Incident Commander with full responsibility for all response actions. At the scene of the emergency, an Incident Control Group (ICG) will form which shall consist of responding emergency personnel who shall report to the Incident Commander. The ICG shall work together to take command and control of emergency situations.

EMO personnel designated as Emergency Manager are listed in Table 2. Assignment as the designated Emergency Manager will be rotated. The Emergency Manager can be reached by contacting the EMO (667-6211 during working hours, 667-7080 after working hours) or the Central Alarm Station (CAS) dispatcher (9-911).

The ERC shall be called out by and should report to the Incident Commander. In the event of an emergency, the ERC shall be responsible for coordinating the Hazardous Materials Response (HAZMAT) Team, Radiological Emergency Assistance (REA) Team, and other related Health and Safety and Environmental Management personnel and resources.

2.2 Health and Safety (HS) Division Response Groups

LANL shall maintain its own response forces within the HS Division to handle emergencies. These response groups shall include:

- Health Physics Operations (HS-1);
- Occupational Medicine (HS-2);
- Risk Management Support (HS-3);
- Industrial Safety and Hygiene (HS-5); AND
- Health Physics Policy and Programs (HS-12).

Any of these groups must respond to an emergency, if requested by the ERC, and shall be coordinated by the ERC (through their team leader,if applicable) in the ICG.

2.2.1 Health Physics Operations (HS-1)

Radiological incidents that occur at any of the TAs shall be evaluated by HS-1, Health Physics Operations. HS-1 will provide field personnel to perform radiological monitoring and decontamination under the supervision of Certified Health Physicists.

2.2.2 Occupational Medicine (HS-2)

LANL's medical facility group(operated by HS-2 Occupational Medicine) shall provide appropriate medical treatment for occupationally-related illnesses and injuries and shall monitor employees to assess the effectiveness of health protection programs. HS-2 shall maintain documented records of the health status of employees and related occupational medicine activities.

Although HS-2 is not involved with on-scene emergency response, they shall maintain a central medical facility with a fully-equipped emergency room and decontamination facilities at TA-3, SM-409. Additionally, this group will staff three satellite first-aid stations at TA-53, TA-16 (S-Site), and TA-55. The locations of these emergency facilities are shown on Figure 2. Medical staff shall include physicians, physician's assistants, registered nurses, x-ray technicians, a physical therapist, a clinical psychologist, assistance counselors, and clinical laboratory technicians.

HS-2 will be supported by the Industrial Safety and Hygiene Group's (HS-5) capabilities for exposure and treatment information via telephone access to the National Library of Medicine's TOXLINE and CHEMLINE; the Toxicity Databank files; POISONDEX and TOMESPLUS (Micromedics); and the CC/INFO database files on MSDSs, NIOSH Technical Information Center information, and the Registry of Toxic Effects of Chemical Substances. HS-2 shall also maintain the TOMES system at the central medical facility (SM-409) to assist the clinical staff with timely exposure and treatment information.

2.2.3 Risk Management Support (HS-3)

HS-3, Risk Management Support, shall be responsible for coordinating and publishing policy and guidance on safety training and operational safety for LANL. Additionally, HS-3 shall provide guidance and assistance to LANL divisions for safety analysis documents and to LANL groups for facilities analysis.

2.2.4 Industrial Safety and Hygiene (HS-5)

Personnel from HS-5, Industrial Safety and Hygiene, shall comprise the LANL HAZMAT Team. The HAZMAT Team will be

responsible for the aggressive mitigation of chemical and hazardous waste emergencies, including field decontamination of victims and responders. The HAZMAT Team (being part of the ICG reporting through the ERC) shall meet the training criteria for emergency response personnel specified in 29 CFR 1910.120(q)(6)(iii), (iv), and (v). HS-5 shall also provide site field testing to determine the nature and extent of chemical contamination, provide information on correct handling of chemicals, make recommendations on protective clothing and equipment, and provide exposure and treatment information.

2.2.5 Health Physics Policy and Programs (HS-12)

The Radiological Emergency Assistance (REA) Section of the Health Physics Policy and Programs Group (HS-12) provides a wide-range of health and safety support for radiological incidents at LANL. The REA Team shall coordinate with the ERC to provide radiological assessment and mitigation. This section shall also provide a contamination-control station at the scene of a radiological incident to process people working in a radiologically-contaminated area.

2.3 Environmental Management (EM) Division Response Groups

At the scene, the environmental Management group shall be coordinated in the ICG by the ERC.

2.3.1 Waste Management (EM-7)

The Waste Management Group (EM-7) shall be responsible for initial response actions at RCRA TSDFs. This group will also provide guidance on proper treatment, storage, and off-site shipment of hazardous waste.

2.3.2 Environmental Protection (EM-8)

The Environmental Protection Group (EM-8) shall be responsible for regulatory compliance and provide guidance on regulatory requirements to other groups. After an emergency, EM-8 shall provide field surveys of soil, water, air, and biota to determine environmental effects of exposure. The group shall provide expertise in hydrogeology and meteorology to establish near- and long-term environmental effects of emergency conditions.

2.4 Other LANL Response Resources

2.4.1 Nuclear Materials Technology (NMT)

Several personnel from the Nuclear Materials Technology (NMT) Division shall be trained in emergency response procedures. In the case of an emergency interrupting operations, these personnel shall be responsible for monitoring for leaks, pressure buildup,

gas generation, or equipment ruptures.

2.5 Contracted Response Groups

Contracted response group shall report to the Operations Officer in the ICG or directly to the Incident Commander in the event of a smaller emergency.

2.5.1 Protection Technology Los Alamos (PTLA, Pro Force)

The Pro Force shall be responsible for LANL security, which is provided by Protection Technology Los Alamos (PTLA) under contract to LANL. During an emergency, the Pro Force activities shall include maintenance of security, direction of traffic within LANL, and control of access to the emergency scene. The Pro Force shall maintain the necessary equipment to perform these functions, such as crowd control equipment and patrol cars.

2.5.2 Johnson Controls World Service, Inc. (JCI)

Johnson Controls World Services, Inc. (JCI) which provides a maintenance support force under contract to LANL shall be under LANL's direction in an emergency. JCI shall conduct inspections of LANL equipment, maintain equipment, and participate in post-emergency cleanup under the direction of HS-5.

2.6. Outside Response Agencies

Outside response agencies shall report to the Operations Officer in the ICG. In smaller emergencies, they will report directly to the Incident Commander.

2.6.1 Los Alamos Fire Department

The Los Alamos Fire Department (LAFD) will provide fire protection and ambulance coverage for the communities of Los Alamos and White Rock and for LANL. In the case of an emergency within LANL, the Fire Department will coordinate fire suppression efforts. LANL shall ensure that Fire Department personnel meet the training criteria of emergency response personnel specified in 29 CFR 1910.120(q)(6)(i) and (ii).

2.6.2 Los Alamos Police Department

In keeping with the principle of handling emergencies internally, the Los Alamos Police Department (LAPD) has only minimal interaction with LANL in an emergency. That interaction is limited to traffic control on DOE roads with public access and to criminal investigations. The limits of interaction are included in a signed agreement.

2.6.3 Los Alamos Medical Center

Those medical cases which cannot be handled at HS-2 will be transferred to the Los Alamos Medical Center (LAMC), where LANL should maintain a fully-equipped decontamination room adjacent to the emergency room. In the event that a case is sent to the hospital, support for the emergency room staff shall be provided by HS-2 medical personnel, HS-1 Health Physics Operations staff, HS-5 Industrial Safety and Hygiene staff, and HS-12 Health Physics Policy and Programs personnel. This assistance will be coordinated through LANL's EMO.

3.0 EMERGENCY EQUIPMENT AND COMMUNICATIONS

Effective emergency response at LANL shall have an efficient communication system which will integrate all personnel into the emergency response. The initial phase of an emergency will involve a small number of individuals at the affected area and notification of the designated Emergency Manager.

3.1 Emergency Central Alarm System

The emergency Central Alarm Station (CAS) is located at TA-64-1. This station shall be manned by Pro Force personnel 24-hours a day and shall be equipped with telephones, medium- and short-range radios, direct-line telephones, a National Warning System (NAWAS) station, and an emergency power system. The fire alarm board at the control room shall give the location of automatic and pull fire alarms.

The emergency central alarm system shall be activated by:

- Telephone communication (9-911 or 911);
- Automatic fire alarms;
- Manual pull alarms;
- Computer interface (to warn of critical events at selected facilities);
- Break-in security; and
- Radio communications.

Activation of the emergency central alarm system will automatically alert the CAS dispatcher, the Pro Force,and the Los Alamos Fire Department. The required emergency response groups will then be notified of the problem by the Emergency Manager, ERC, and/or the CAS dispatcher.

3.2 Maintenance Central Alarm System

The maintenance central alarm system shall be manned by JCI personnel 24 hours a day. The maintenance alarm system shall interface with computers which monitor sensitive equipment throughout LANL. Activation of an alarm will trigger a call-out procedure to alert maintenance personnel and management supervision to correct the malfunction.

Internal communication systems at LANL shall include:

- Centrex telephone system;
- Medium-range radio nets (30-60 miles);
- Limited-range radio nets (3-10 miles);
- Telephone/radio paging; and
- Two-way hand-held radios.

Off-site communications with Federal, State, County, and other agencies shall be maintained by the following:

- Centrex telephone system;
- Private telephone lines (if Centrex fails);
- Medium-range radio nets (30-60 miles);
- Limited-range radio nets (3-10 miles);
- Two NAWAS; and
- KRSN radio link (local radio station).

The LANL EOC, located at TA-59-1 and maintained by the EMO, shall operate radio systems on key LANL and off-site channels. Emergency personnel responding to on-site incidents will have the benefit of wide-area radio coverage using the EOC facilities. After hours, the Emergency Manager shall be responsible for activating whatever support personnel, services, or equipment is needed.

4.0 CONTINGENCY PLAN IMPLEMENTATION

The following section defines the guidelines that shall be used to initiate this Contingency Plan and the resulting actions taken.

4.1 Guidelines for Implementation

The decision to implement this Contingency Plan will depend upon whether or not an imminent or actual incident involving a release of hazardous waste or hazardous materials to the environment could threaten human health or the environment. The following guidelines shall be used by the Emergency Manager in making the decision whether or not to implement this plan.

This Contingency Plan will be implemented in the following situations:

Spills

- A hazardous waste spill cannot be contained with application of absorbents;
- Precipitation threatens to move spilled material off-site;
- A hazardous waste spill caused the release of flammable materials, creating a fire or explosion hazard;
- A hazardous waste spill results in toxic fumes which threaten human health; or
- An earthquake or other natural disaster threatens containment integrity.

Explosions

- An unplanned explosion involving hazardous waste occurs; or
- An imminent danger exists that an explosion involving hazardous waste could occur.

Fires

- Any fire involving hazardous waste that cannot be controlled with fire extinguishers; or
- Any building, grass, forest, or nonhazardous waste fire that threatens to ignite hazardous material at the RD&D unit.

4.2 Emergency Notification

During working hours, immediately upon discovery of an imminent or actual incident involving hazardous waste at the RD&D unit, line management and the Emergency Management Office will be notified by on-site personnel. During nonworking hours, all incidents involving hazardous waste at the RD&D unit shall be reported to the designated Emergency Manager or the CAS dispatcher. In the case of fire involving hazardous waste at the RD&D unit, notification of these individuals shall be superseded by the LANL fire alarm system. A fire shall be reported by dialing 9-911, activation of automatic alarms, or activation of a fire pull box. All fire alarms shall alert the CAS Dispatcher, the Los Alamos Fire Department, and the PTLA Pro Force.

The first arriving emergency trained person shall become the temporary Incident Commander. Once the Emergency Management Office is notified of the emergency, the designated Emergency Manager shall proceed to the scene and be briefed by the temporary Incident Commander, building/area personnel, and other emergency units/teams. The Emergency Manager will then assume the position of Incident Commander. The Incident Commander shall recommend activation of the EOC to the ADO. Upon concurrence of the ADO, the EOC will be activated and the necessary members of the Emergency Management Team determined. The Incident Commander shall form an ICG and contact the ERC. The ERC will notify the appropriate emergency response groups. Table 1 describes the assistance available from each response group. The Incident Commander should use this list as criteria to determine which groups to contact in an emergency. Each response group shall maintain an on-call person and/or a call-down procedure to respond to emergencies.

4.3 Emergency Manager Actions

Upon notification of an incident, the Emergency Manager (Incident Commander) shall:

1. Proceed directly to the scene.
2. Call the ERC.
3. Assess the nature of the incident (e.g., through communication with the temporary Incident Commander).
4. Assume Incident Command.
5. In conjunction with the ERC, determine the quantities and types of hazardous waste involved.
6. Based on the guidelines in Section 4.1 of this plan, determine if implementation of this Contingency Plan is

warranted.

7. Recommend activation of the EOC, if necessary.

Upon deciding to implement this Contingency Plan, the Incident Commander will perform the following additional response actions using the ERC, when appropriate:

1. Assess the hazards to human health and the environment including both direct and indirect effects, such as generation of toxic, irritating, or asphyxiating gases and/or hazards of run-off of water or chemicals used for fire suppression. An individual designated by the Emergency Manager will use the guidelines in Section 4.1 to assess the hazards to human health and the environment. If any of the criteria under Section 4.1 are met, evacuation of the immediate area will be initiated if the response group leader has not already accomplished evacuation of the area.

2. Determine if evacuation of the local area is advisable and, if so, immediately notify appropriate response groups and the LAPD.

3. Notify required response personnel and the DOE Los Alamos Area Office (LAAO) by phone, radio, or through the CAS Dispatcher. In the case of fire, the Emergency Manager shall confirm that the Fire Department Officer-in-Charge at the scene is aware of the special hazards associated with hazardous waste, and will assume Incident Command.

4. Warn the remaining on-scene and response personnel of imminent or actual hazards using the radio or the public address (PA) system.

5. In emergency situations, the activated EOC Crisis Manager (Laboratory Director of designee), through the Environmental Management representative, shall notify the New Mexico Environment Department (NMED) at (505) 827-9329, and the National Response Center at (800) 424-8802, reporting:

   - Name and telephone number of the reporter;
   - Name and address of the facility;
   - Time and type of incident;
   - Name and quantity of material involved, to the extent known;

- The extent of injuries, if any; and
- The possible hazards to human health or the environment outside the facility.

6. Advise the response groups of hazards to minimize personnel exposure and expedite mitigation.

Once control of the emergency is established, the Incident Commander will delegate cleanup and decontamination responsibilities to the affected areas's line management. The responsibility group leader or group leader designee shall:

1. Arrange for site cleanup.
2. Provide for proper handling of recovered waste, contaminated soil, or contaminated surface/groundwater.
3. Provide for decontamination of equipment as needed.
4. Arrange for replacement and/or repair of equipment, as needed.
5. Ensure that testing is conducted to verify successful cleanup.

Within 15 days of the incident, DOE LAAO will submit the report described in Section 10.0 to the Environmental Protection Agency (EPA) Regional Administrator and the NMED.

5.0 SPILLS

Sudden releases include spills of hazardous waste which pose a significant threat to human health or the environment. Spill incidents resulting in a sudden release of hazardous waste to the environment which cannot be contained or which presents a threat to human health or the environment shall require implementation of this Contingency Plan.

The general steps in handling hazardous waste spills are:

- Containment, including spreading absorbents or forming temporary dikes;
- Waste pickup and packaging in sound containers; and
- Decontamination followed by testing to assure adequate cleanup.

The steps to be taken for spill mitigation will be determined by the Incident Commander with input from the ERC. If initial

mitigation of the spill is necessary before the Emergency Manager arrives, a qualified member of the affected area's operating group will serve as the temporary Incident Commander.

5.1 Spill Control Procedures

Absorbent will be added to the waste spill during spill control.

5.2 Decontamination Verification

Decontamination will be accomplished at the spill site. After the spilled material has been absorbed, the material will be containerized. Because the floor of the RD&D unit is cement, water or an appropriate solvent will be used to clean the area and this liquid will be absorbed with universal sorbent and containerized.

A sample of unused decontamination water or solvent and absorbent material will be taken prior to the final washing to establish baseline data. A composite sample will then be taken of the material used to absorb the final waste water. No hazardous waste constituents should be present in this sample that were not present at similar levels in the unused decontamination water. If the sample exhibits any of the characteristics of a hazardous waste as defined in HWMR-7, Part II, 40 CFR, Section 261 Subpart C, or a hazardous constituent as listed in HWMR-7, Part II, 40 CFR Section 261 Appendix VIII (and not detected in the unused decontamination water) is present above established health-based levels, the decontamination procedures will be repeated. An alternative demonstration of decontamination may be proposed and justified to the Secretary, NMED, who will evaluate the proposed alternative in accordance with the standards and guidance then in effect. If the proposed alternative is accepted, decontamination levels will meet the levels approved by the NMED. Each composite sample will be taken using a thief or trier as specified in EPA's SW-846, "Test Methods for Evaluating Solid Waste," Physical/chemical Methods, latest edition.

6.0 EXPLOSION

A sudden release caused by an explosion may result in a significant threat to human health or the environment. Implementation of this Contingency Plan is required whenever a sudden release which cannot be contained or which presents a threat to human health or the environment occurs as a result of an explosion.

In the case of explosions, all personnel will immediately evacuate the area. Any injured personnel will be decontaminated in the field, if required and if time allows, and transported by LAFD ambulance to an HS-2 facility of LAMC for treatment. If an

injury is severe and requires immediate medical evacuation, the injured person will be wrapped to contain contamination. The Emergency Management Office must be contacted immediately upon activation of the emergency central alarm system, and then the Emergency Manager will ensure that all necessary emergency response personnel are alerted. The LAFD shall be notified automatically upon central alarm system activation. The Emergency manager shall assume Incident Control and will remain near the site, but at a safe distance, to inform the personnel responding to the explosion of the known hazards.

Upon arrival at the scene, the LAFD Senior Officer will evaluate information provided by the group leader, other site personnel, other members of the ICG, and Incident Commander to select the appropriate fire-fighting methods and tactics. The LAFD Senior Officer will direct fire fighting operations under the general direction of the Incident Commander.

7.0 FIRE

Fires may result in a sudden release of hazardous waste that poses a significant threat to human health or the environment. Implementation of this Contingency Plan is required whenever a fire incident results in a sudden release of hazardous waste which cannot be contained or which presents a threat to human health or the environment.

Depending on the size of the fire, portable fire extinguishers may be used. However, LANL shall discourage the use of portable fire extinguishers by employees and encourage immediate evacuation of the area and notification of the Los Alamos Fire Department. The Emergency Manager will alert all necessary emergency response personnel. The Fire Department shall be automatically alerted when the emergency central alarm system is activated. If the fire spreads or increases in intensity, all personnel should evacuate to an area designated by the responsible group leader or Emergency Manager. The Emergency Manager shall assume the role of Incident Commander and should remain near the scene to advise the personnel responding to the fire of the known hazards. The Emergency Manager, being familiar with spill response and emergency actions shall advise fire-fighting personnel of the potential hazards involved.

Upon arrival at the scene, the LAFD Senior Officer will evaluate information provided by the group leader, other site personnel, other members of the ICG, and Incident Commander to select the appropriate fire-fighting methods and tactics. The LAFD Senior Officer will direct fire-fighting operations under the general direction of the Incident Commander.

8.0 EVACUATION

The RD&D PBR/SDP facility must be evacuated upon the voice command to evacuate the area, or upon the sounding of the evacuation alarm or the fire alarm.

8.1 Emergency Process Shutdown Prior to Evacuation

Personnel shall be instructed to shut down equipment prior to evacuating a building unless an immediate building evacuation is announced or signaled.

8.2 Evacuation Plan

Emergency situations shall warrant the shutdown and evacuation of an area(s) or building(s) in order to protect personnel and property, to anticipate the emergency condition, or to enhance the appropriate response.

To initiate building evacuation, the evacuation or fire alarm shall be sounded and/or the public address system shall be used. The Fire Alarm Maintenance Section at 667-4027 and the LAFD Platoon Chief at 667-7026 may silence and reset the fire alarm.

To evacuate a portion of a building, the PA system is more appropriate. The PA system will notify the occupants of the area to be evacuated and, additionally, will advise personnel in the rest of the facility of the existence of a problem in that specific area.

The PA system, fire alarm, or evacuation alarm may be used to initiate an evacuation. Once evacuation has been initiated, personnel shall turn off all equipment, if conditions allow, that could contribute to the hazard if left unattended. Personnel should then leave the affected area and go to the muster area.

In the event of an evacuation of only a portion of the building, the responsible group leader will designate a control point at the closest safe location (e.g., considering wind direction). This area will be outside the affected area and will serve as a muster point where the group leader or his designee can oversee evacuation operations and work to prevent further spread of the hazard.

For a small-scale evacuation, a responsible on-site person may direct evacuation. For a large-scale evacuation, the emergency central alarm system may be activated, the EMO will be notified and, until the Emergency Manager arrives at the scene to assume responsibility for the evacuation, a responsible on-site person may begin the evacuation process.

9.0 SALVAGE AND CLEANUP

The affected area shall be surveyed by appropriate representatives from the HS and EM Groups before salvage, cleanup, and return to normal operations. Visual inspections of the affected area will be supplemented by sampling to determine whether cleanup is complete. After determination of any existing hazards from toxic or hazardous gases or fumes, electrical hazards, radiological hazards, or other unsafe conditions, personnel, or a selected team will reenter the area to perform designated contamination tasks, repairs, and salvage to allow the return to normal operations. After an emergency, the Incident Commander will turn the operation over to line management, who will:

- Provide for proper handling of recovered waste, contaminated soil or surface water, or any other material that results from a release, fire, or explosion;
- Arrange for site cleanup procedures to be completed; and
- Ensure that emergency equipment is cleaned, decontaminated, and fit for its intended use before operations are resumed.

Damage assessment, recovery, and reporting shall be performed within the requirements of DOE Order 5000.3A, as referenced by DOE Order 5500.3A (Emergency Planning and Preparedness for Operational Emergencies). The Incident Commander shall assume the coordination of post-emergency actions, particularly during the time period immediately after the emergency. Such actions shall include cleanup operations, repair of vital equipment, or interim hazard-removing operations (such as demolition of unstable walls). The services of the affected operational organizations, HS and EM Divisions, JCI, and other on-site resources will also be utilized to estimate cleanup costs and operational impact.

10.0 POST-EMERGENCY ASSESSMENT

When the emergency is over, the cause of the emergency and the effectiveness of the response shall be investigated, in order that future emergencies may either be prevented, or that the response to them may be more effective. Following each event requiring the implementation of this Contingency Plan, the Emergency Manager shall schedule and conduct a critique with representatives of all responding groups, building/area representatives, and LANL management to determine the adequacy of the response.

11.0 EMERGENCY RESPONSE RECORDS AND REPORTS

The details of any incident that requires implementation of this Contingency Plan must be recorded by the responsible group or section leader for the RD&D unit in compliance with HWMR-7, Part V, 40 CFR, § 264.53. This Incident Report must include the time, date, and full description of the incident.

Any emergency that requires implementation of this Contingency Plan will be reported to the NMED in writing within 15 days. The report, submitted DOE LAAO, shall include the following data:

- Name, address, and phone number of owner or operator;
- Name, address, and phone number of the facility;
- Date, time, and type of incident (e.g., fire, explosion, spill);
- Name of material involved;
- Quantity of material involved;
- Extent of injuries (if any);
- Assessment of actual or potential hazards to human health or the environment; and
- Estimated quantity and disposition of material recovered from the incident.

12.0 CONTINGENCY PLAN AMENDMENT

LANL shall review and immediately amend, if necessary this emergency response plan, as required by HWMR-7, Part V, 40 CFR, § 264.54.

This Contingency Plan will be reviewed by the EMO, EM-7, EM-8, and by HS-5 and HS-12, if necessary, and will be amended immediately if determined to be inadequate to handle spills, explosions, fires and whenever:

- The facility permit is revised;
- There is significant change in the design or operation of the facility (i.e., waste quantities handled and handling techniques);
- The list of Emergency Managers changes;
- Operating experience or technical review demonstrates

that the plan is inappropriate.

- Actual implementation of the plan demonstrates inadequacies.

TABLE 1
RESPONSE GROUPS AND AGENCIES AVAILABLE TO THE EMERGENCY MANAGEMENT OFFICE FOR GUIDANCE AND/OR EMERGENCY ASSISTANCE

LABORATORY CONTROLLED RESPONSE GROUP	TELEPHONE	RESPONSIBILITIES
HS-1, Health Physics Operations	667-5296	Radiological monitoring and decontamination.
HS-2, Occupational Medicine	667-7251	Emergency medical treatment.
HS-3, Risk Management Support	667-3363	Provides personnel to perform risk analyses. Provides guidance on operational safety.
HS-5, Industrial Hygiene and Safety	665-4427	Site evaluation - field testing to determine the nature and extent of contamination (nonradiological). Specify protective clothing and equipment. Provide HAZMAT Team.
HS-12, Health Physics Policy and Programs	667-5296	Provide support for radiological incidents, provide REA Team capable of performing radiological assessments and personnel decontamination. Maintain radiological emergency preparedness for the Laboratory.
EM-7, Waste Management	667-5839	Provide guidance on proper treatment, storage, and off-site shipment of mixed waste.
EM-8, Environmental Protection	667-5021	Field surveys to determine spread of contamination and adequacy of cleanup.
EM-9, Environmental Chemistry	667-3269	Chemical/radiological analytical services.

TABLE 1
(Continued
RESPONSE GROUPS AND AGENCIES AVAILABLE TO THE EMERGENCY MANAGEMENT OFFICE FOR GUIDANCE AND/OR EMERGENCY ASSISTANCE

LABORATORY CONTROLLED RESPONSE GROUP	TELEPHONE	RESPONSIBILITIES
NMT, Nuclear Materials Technology	667-2556	Monitor for leaks, pressure buildup, gas generation, or equipment ruptures in the event of interruption of operations at TA-55 due to an emergency.
Protection Technology Los Alamos Protective Force (Pro Force)	667-4437	Traffic control, security.
Johnson Controls World Services, Inc.	667-6191	Maintenance personnel and equipment, assist in waste cleanup under HS-5 guidance.
NON-LABORATORY CONTROLLED RESPONSE GROUP	**TELEPHONE**	**RESPONSIBILITIES**
Los Alamo Fire Department	9-911	Firefighting personnel and equipment.
Los Alamos Police Department	9-911	Traffic control of DOE roads with public access.
Los Alamos Medical Center*	662-4201 or 911	Medical services.

* Medical services related to hazardous and mixed waste injuries provided under the direction of HS-2.

TABLE 2
EMERGENCY MANAGEMENT OFFICE EMERGENCY MANAGERS*

EMERGENCY MANAGERS	LABORATORY TELEPHONE	HOME TELEPHONE	HOME ADDRESS
James S. Griffiths	7-6211	662-9155	190 Manhattan Loop, Los Alamos, NM
Gary W. Bequette	7-6211	662-4554	2369-B 33rd Street, Los Alamos, NM
Frank G. Pearce	7-6211	984-8901	110 Delgado Street, Los Alamos, NM
Deanna M. Seitz	7-6211	662-7356	65 San Juan, Los Alamos, NM
James A. Walton	7-6211	455-3316	Route 11, Box 20, Space 19, Santa Fe, NM

* To ensure immediate response, the Emergency Manager may be reached at the Emergency Management Office, 667-6211 or, after hours, 667-7080.

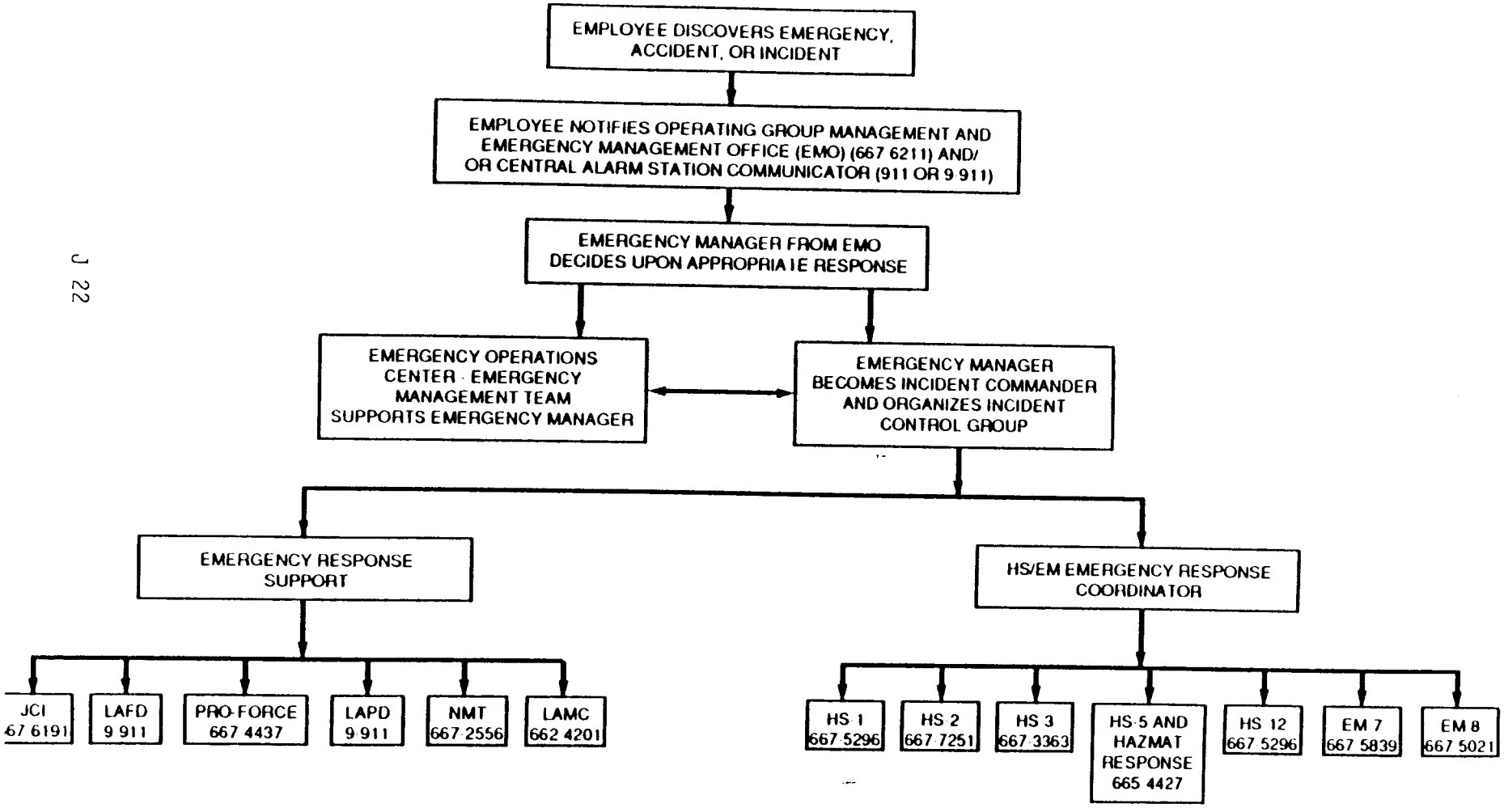

Figure 1 Waste Emergency Notification Structure

FIGURE 2. EMERGENCY FACILITIES

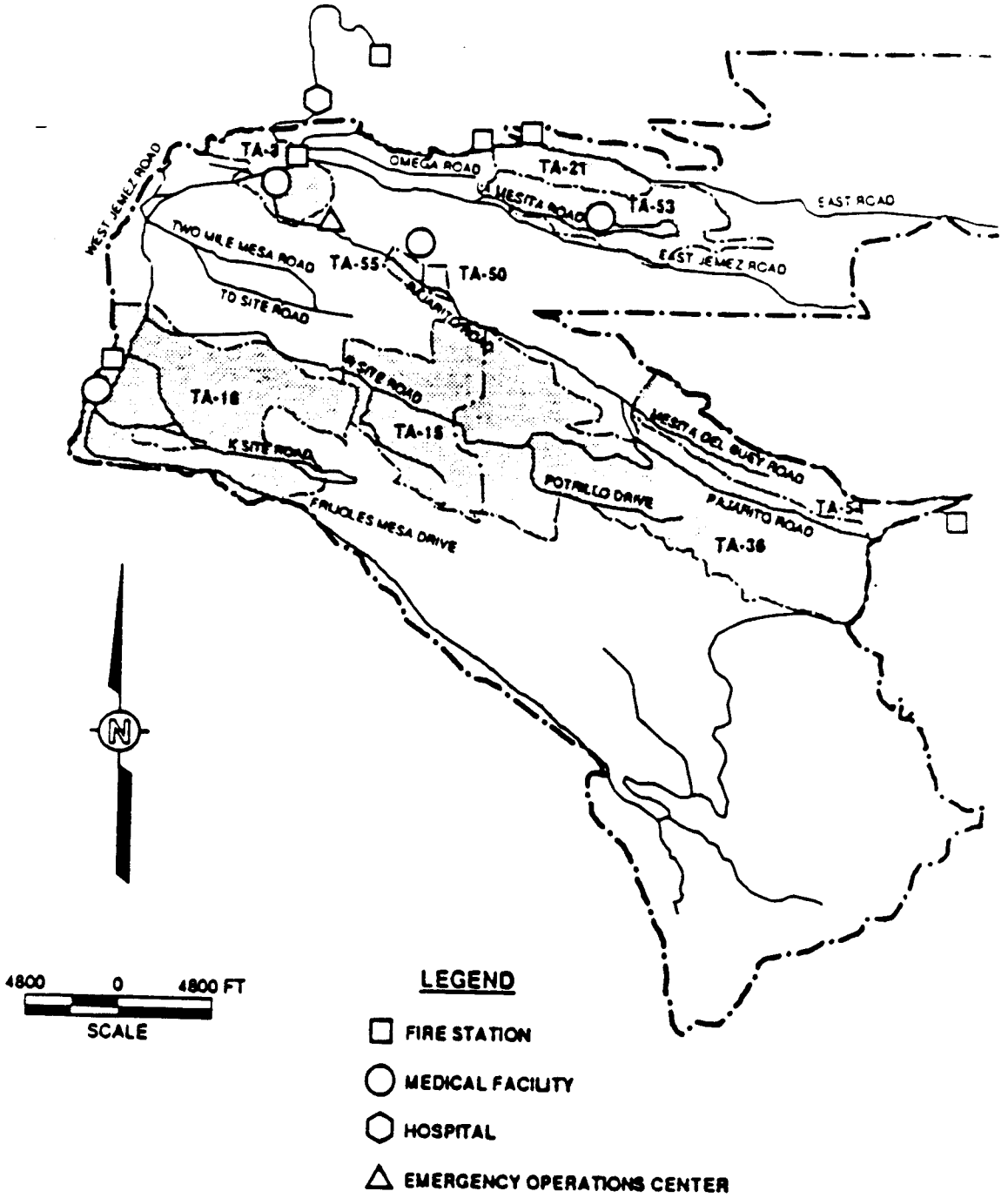

PERMIT ATTACHMENT K
CLOSURE PLAN

Introduction

Upon completion of the RD&D experiments, LANL shall clean close the PBR/SDP unit in a manner that is protective of human health and the environment in accordance with the requirements of HWMR-7, Part V, 40 CFR, §§ 264.111; 264.112; 264.113; 264.114 and 264.115.

Upon closure all hazardous wastes and hazardous waste residues shall be removed from the unit and the area surrounding the unit. The following description of the procedures to close the PBR/SDP unit shall be the guideline for closure of the Research, Development and Demonstration activities and facility:

Closure Performance Standard

This closure plan is designed to ensure that LANL shall close the RD&D PBR/SDP unit in a manner that will not require further maintenance and in such a manner that controls, minimizes, or eliminates, the post-closure escape of hazardous waste and hazardous constituents to the environment. At the time of closure, all waste and decontamination residues shall be removed and disposed of at an appropriate storage, treatment, or disposal facility. Decontaminated equipment may be salvaged for continued use of the PBR/SDP unit (experimenting with non-RCRA-regulated materials) or for other uses at the LANL facility. No post-closure care will be required, as no disposal of hazardous wastes or hazardous constituents will occur.

Disposition of Residues

At closure all hazardous wastes, hazardous waste residues, contaminated system containment components, equipment and hazardous constituents of wastes managed in the PBR/SDP unit must be removed. Verification sampling shall be performed to demonstrate that decontamination has been effective.

Maximum Waste Inventory

The maximum inventory of hazardous wastes that may be stored in the RD&D ancillary storage area at any one time will be 165 gallons (three 55-gallon containers or equivalent). At closure, the entire inventory of hazardous waste associated with the PBR/SDP unit shall be removed. LANL's Waste Management Group (EM-7) shall coordinate the pick-up of hazardous wastes from Building 128; characterize the wastes (as necessary); ensure proper management of wastes in LANL's

RCRA permitted units; and coordinate off-site shipment of RCRA wastes to appropriate permitted treatment, storage, and disposal facilities.

Procedures to Close the PBR/SDP Unit

All waste inventory present at the unit at the time of closure shall be transported by qualified LANL personnel to one of LANL's RCRA permitted storage units for subsequent storage, treatment, and/or disposal as described above. Dismantling and decontamination of the experimental unit and waste storage area will be accomplished by either trained Waste Management Group (EM-7) decontamination personnel or qualified subcontractors.

Decontamination of Equipment and Hazardous Waste Residues

All equipment associated with the PBR/SDP unit that has come in direct contact with hazardous waste shall be disposed of as hazardous waste, decontaminated and reused, or decontaminated and disposed of as solid waste in compliance with HWMR-7, Part V, 40 CFR, § 264.114 and this closure plan. The PBR/SDP equipment components and plumbing will be dismantled and placed in appropriate containers. Oversize pieces of equipment will be wrapped in plastic sheeting.

All other wastes including treatment effluents and filter units shall be suitably containerized. The wastes will be characterized in accordance with the general LANL Waste Analysis Plan that has been included herein as Permit Attachment II-1. All wastes shall be transported from Building 128 by the Waste Management Group (EM-7) or qualified subcontractors. Wastes determined to be hazardous shall be transported to one of LANL's RCRA permitted storage units in Technical Area 50 or Technical Area 54 for subsequent storage, treatment, and/or disposal. Wastes determined to be non-hazardous solid wastes will be transported to Technical Area 51 for subsequent storage and disposal.

If feasible and practical, decontamination of equipment and parts may be performed in LANL's decontamination facility that is located in Building 1 of Technical Area 50. This facility is outfitted with proper decontamination equipment and run-off controls. Equipment components and plumbing shall be decontaminated using methods such as steam-cleaning, detergent washing, or equivalent methods. Decontamination will be performed by the Waste Management Group (EM-7) personnel or qualified subcontractors wearing appropriate personal protective equipment. Sampling and regulatory support for decontamination activities will also be provided by the Environmental Protection Group (EM-8).

Decontaminated equipment may be disposed of as non-hazardous scrap in Technical Area 51 or may be returned for reuse at the facility. All solutions produced during decontamination shall be containerized, characterized in accordance with the general Waste Analysis Plan (Attachment II-1), and sent to an appropriate storage, treatment, or disposal facility.

The PBR/SDP operating records must be reviewed to determine if spills or leaks of hazardous wastes occurred during operation of the unit. If spills or leaks occurred, swipe sample(s) will be collected in those areas. The swipe sample(s) will be analyzed for hazardous constituents of the wastes spilled using EPA approved methods. If hazardous constituents are detected in a swipe sample, then the floor in and around the PBR/SDP unit (located in the 55-foot by 70-foot area of Building 128) or the concrete pad under the ancillary hazardous waste storage area shall be decontaminated using steam-cleaning, detergent washing, or other equivalent methods.

Decontamination of equipment components and floors (if necessary) will be demonstrated using either swipe samples or samples of rinsate water. Samples will be analyzed for organic constituents of the waste using EPA Method 8240. Successful decontamination will be defined as:

- No detectable hazardous constituents of wastes treated in the PBR/SDP unit in the final rinsate or swipe sample.

If sampling indicates that decontamination has not been successful, then steam-cleaning, detergent washing, or other equivalent methods shall be repeated until sampling indicates that decontamination is complete.

An alternative demonstration of decontamination may be proposed and justified at the time of closure as circumstances indicate. If the proposed alternative is judged to be acceptable under the standards and guidance in effect, then the alternative shall be incorporated into the closure plan by permit modification.

Amendment to Closure Plan

LANL shall amend the closure plan in accordance with HWMR-7, Part V, 40 CFR, § 264.112(b) whenever necessary.

Notification of Closure

LANL must notify the New Mexico Environment Department in writing 45 days prior to the date of anticipated closure. Within 90 days of accepting the final volume of hazardous

wastes for treatment in the RD&D PBR/SDP unit, the entire inventory of hazardous waste shall be removed from the unit for proper storage and subsequent treatment/disposal at one of LANL's RCRA permitted hazardous waste management units.

Time allowed for Closure

Within 180 days of accepting the final volume of hazardous wastes for treatment, all closure activities shall be completed in accordance with the closure schedule specified in Table K-1, as follows:

Closure Schedule:

Activity	Days
Final receipt of waste	0
Removal of waste inventory to RCRA permitted storage unit	0-90
Equipment demolition and removal	30-90
Equipment decontamination	60-90
Floor decontamination (if necessary)	60-90
Appropriate storage, treatment, and/or disposal of decontamination residues	60-120
Sampling and analysis to verify decontamination	60-120
Closure Certification	180

Certification of Closure

Upon completion of closure, an independent registered professional engineer and the DOE/LANL shall prepare a letter certifying that the RD&D unit was closed in accordance with the approved closure plan as required by HWMR-7, Part V, 40 CFR, § 264.115

FIGURE 1

Site Map

Revision
6/24/93

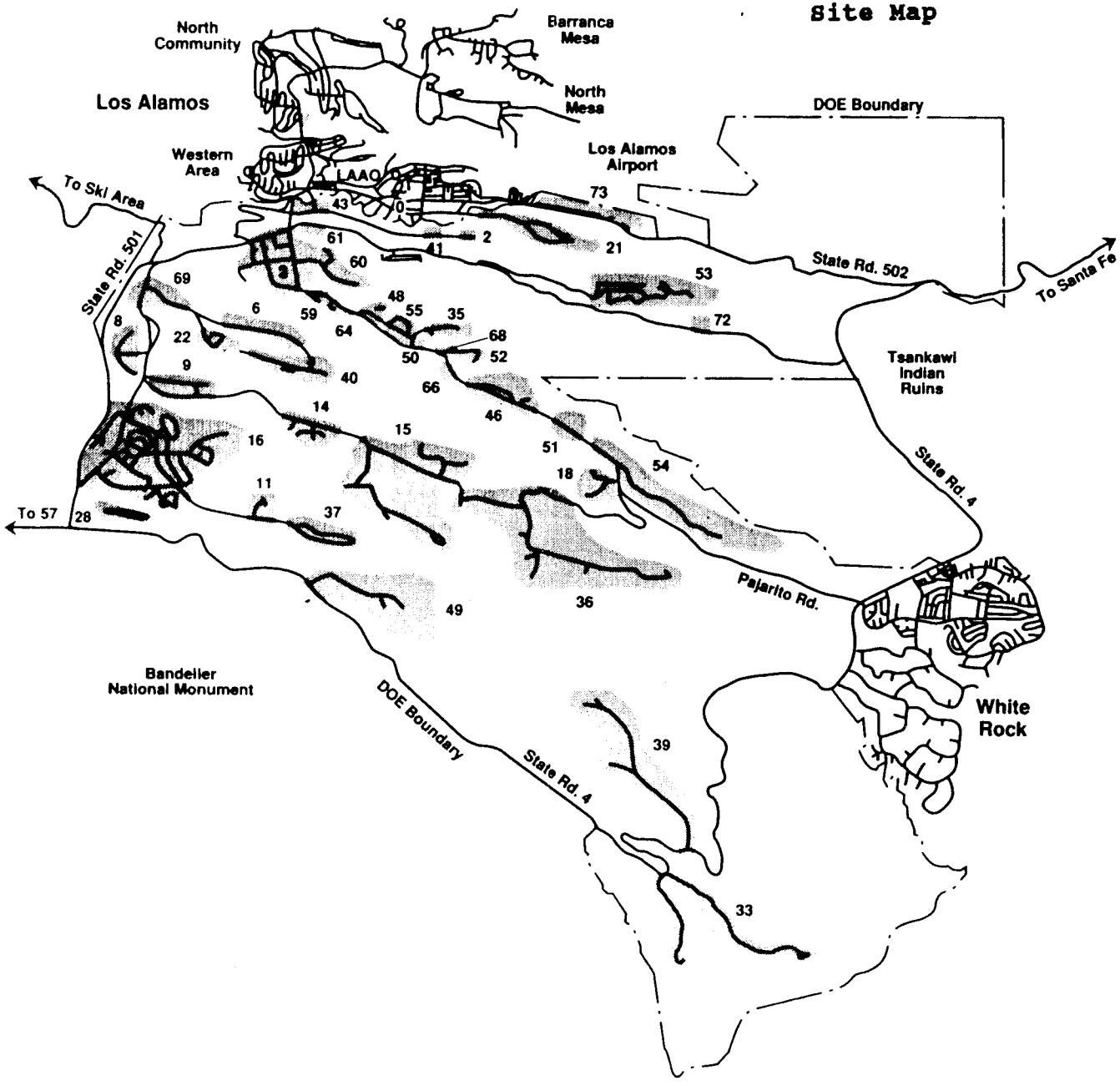

Los Alamos
NATIONAL LABORATORY
Technical Area Locations

TA-0	Unassigned Land Reserve
TA-2	Omega Site
TA-3	South Mesa Site
TA-6	Two Mile Mesa Site
TA-8	Anchor Site West
TA-9	Anchor Site East
TA-11	K-Site
TA-14	Q-Site
TA-15	R-Site
TA-16	S-Site
TA-18	Pajarito Laboratory
TA-21	DP-Site
TA-22	TD-Site
TA-28	Magazine Area A
TA-33	HP-Site
TA-35	Ten Site
TA-36	Kappa Site
TA-37	Magazine Area C
TA-39	Ancho Canyon Site
TA-40	DF-Site
TA-41	W-Site
TA-43	Health Research Lab & DOE Headquarters
TA-46	WA-Site
TA-48	Radiochemistry Site
TA-49	Frijoles Mesa Site
TA-50	Waste Management Site
TA-51	Radiation Exposure Facility
TA-52	Reactor Development Site
TA-53	Meson Physics Facility
TA-54	Waste Disposal Site
TA-55	Plutonium Facility Site
TA-57	Fenton Hill Site
TA-59	OH-Site
TA-73	Airport

TA-60,61,64,66,68,72
(unnamed TAs)

RESEARCH, DEVELOPMENT AND DEMONSTRATION (RD&D) PERMIT APPLICATION

PACKED-BED REACTOR/SILENT DISCHARGE PLASMA TREATMENT UNIT

Los Alamos National Laboratory
Los Alamos, New Mexico 87545
EPA I.D. No. NM0890010515

December 1992

Revised June 24, 1993
Revised July 14, 1993

Revision 2
7/14/93

RESEARCH, DEVELOPMENT AND DEMONSTRATION (RD&D) PERMIT APPLICATION
PACKED-BED REACTOR/SILENT DISCHARGE PLASMA TREATMENT UNIT

TABLE OF CONTENTS

1.0 INTRODUCTION 1

2.0 GENERAL FACILITY INFORMATION 3
- 2.1 RCRA Permit Status 3
- 2.2 Site Location 4
- 2.3 RD&D Unit Location 4
- 2.4 RD&D Project Description 5

3.0 WASTE DESCRIPTION 6
- 3.1 Waste to be Treated in the RD&D Unit 7
- 3.2 Waste Generated by RD&D Treatment 8
- 3.3 Waste Analysis 9

4.0 PROCESS ENGINEERING 11
- 4.1 Description of Treatment Unit 11
  - 4.1.1 Waste Feed System 11
  - 4.1.2 Packed-Bed Reactor Unit Components . . . 11
  - 4.1.3 Silent Discharge Plasma Unit Components . 12
- 4.3 Pollution Control 14
- 4.4 Ancillary Waste Storage Area 14
- 4.5 Operating Parameters 15

5.0 RESEARCH PLAN 15
- 5.1 Objective 16
- 5.2 Parameters and Monitoring Frequency 17
- 5.3 Monitoring Plan 18
  - 5.3.1 Process Monitors 18
  - 5.3.2 Emissions and Effluent Monitors 18
  - 5.3.3 Equipment Shut Down 19
- 5.4 Inspection Procedures 20

6.0 QUALITY ASSURANCE/QUALITY CONTROL 21
- 6.1 Calibration Procedures 21

7.0 DATA AND RECORDKEEPING 22

8.0 SAFETY PLAN 23

9.0 PERSONNEL QUALIFICATIONS AND TRAINING 28

TABLE OF CONTENTS
(continued)

10.0 CLOSURE PLAN 29

11.0 DURATION OF PERMIT 30

12.0 CERTIFICATION 31

FIGURES

Figure 1 Site Map
Figure 2 RD&D Unit Key Map
Figure 3 Location Map
Figure 4 Layout of Building 128
Figure 5 Topographic Map
Figure 6 Location of RD&D Units Relative to Nearby Fault Traces
Figure 7 Packed Bed Reactor
Figure 8 Cross-Section of Silent Discharge Plasma Unit
Figure 9 Packed-Bed Reactor/Silent Discharge Plasma RD&D Unit: Open-Loop Configuration
Figure 10 Packed-Bed Reactor/Silent Discharge Plasma RD&D Unit: Closed-Loop Configuration

ATTACHMENTS

Attachment 1 Waste Profile Information
Attachment 2 Waste Analysis Plan and Quality Assurance Project Plan (QAPjP)
Attachment 3 Diagnostic Equipment
Attachment 4 Standard Operating Procedures
Attachment 5 Unit-Specific Inspection Form
Attachment 6 Contingency Plan
Attachment 7 Qualifications of Principal Investigator
Attachment 8 Training Course Summaries and Personnel Training Records
Attachment 9 Correspondence Regarding LANL Floodplain Maps
Attachment 10 PBR/SDP Unit Closure Plan
Attachment 11 Research Paper: "Nonthermal Plasma Alternative to the Incineration of Hazardous Organic Wastes"

Revision 2
7/14/93

LOS ALAMOS NATIONAL LABORATORY
LOS ALAMOS, NEW MEXICO
EPA I.D. No. NM0890010515

RESEARCH, DEVELOPMENT AND DEMONSTRATION (RD&D) PERMIT APPLICATION

PACKED-BED REACTOR/SILENT DISCHARGE PLASMA TREATMENT

1.0 INTRODUCTION

Environmental goals at Los Alamos National Laboratory (LANL) are to maintain and operate LANL facilities in an environmentally advantageous manner and to develop new technologies that will help the Department of Energy (DOE) in similar efforts at other facilities. New technologies are being developed to better meet the needs of corrective action, waste management, or environmental restoration. The principal mission of LANL is the application of science and technology to solve national problems including weapons development, energy supply, and conservation programs, while basic scientific research complements and strengthens its fundamental technical capabilities. LANL is owned by DOE, and is co-operated by DOE and the University of California.

LANL is requesting issuance of a Research, Development and Demonstration (RD&D) permit from the New Mexico Environment Department for the operation of a Packed-Bed Reactor (PBR) unit combined with a Silent Discharge Plasma (SDP) treatment unit. PBR/SDP technology uses an advanced oxidation technique for the treatment of hazardous wastes as a two stage treatment process. The first stage involves injection of liquid organic hazardous wastes into the externally heated PBR, where many of the hazardous compounds undergo vaporization and thermal decomposition. More complex organic compounds, however, may resist thermal destruction within the PBR and require further treatment. The effluent from the PBR passes into the second stage of the process, the SDP, which is comprised of a non-thermal electrical-discharge plasma. Large quantities of reactive free radicals are generated in the plasma, and the free radicals react with and decompose the remaining hazardous organic constituents in the effluent. The end products of the PBR/SDP waste treatment processes include primarily carbon dioxide, water, carbon monoxide, and acids.

PBR/SDP treatment will involve use of a pilot-scale unit to demonstrate the technical feasibility and performance capability of an innovative hazardous waste treatment technology. It is anticipated that this system has the potential to destroy hazardous waste organic constituents with a higher efficiency and without the production of typical undesirable high-temperature combustion products of present treatment technologies. The eventual full-scale development of this system would provide distinct improvements over currently available incinerator equipment in terms of both destruction efficiency and effluent gas composition.

The research objective of the work to be conducted under this permit is to determine if process data for a real waste stream is comparable with data produced for surrogates of that waste stream. The answer will determine if the present technology is worth pursuing on a more complex and hazardous waste in future research. Components of the waste have been tested individually in the unit as surrogate (i.e., non-waste) materials. These tests have demonstrated 99.99% destruction of the surrogates.

The main purpose of obtaining a RD&D permit at this time is to allow the research to continue into a phase where an actual waste may be processed by the unit. If it can be successfully demonstrated that similar destructive efficiencies with the real waste can be achieved as those with the surrogate work, then modifications to this application may be made to deal with different and more complex waste than those proposed at this time.

The successful completion of this project will be one step in the eventual development of a full-scale treatment system capable of significantly reducing the volume and hazards of several waste streams generated within the DOE production complex. Initially, only RCRA hazardous wastes will be treated in the PBR/SDP unit. If the treatment demonstration is successful, it is anticipated that LANL may request later modification or renewal of the RD&D permit to include treatment of mixed (hazardous and radioactive) wastes.

This RD&D application has been prepared in accordance with the requirements of Section 3005(g) of Resource Conservation and Recovery Act (RCRA), as codified under 40 CFR Section 270.65, and Section 901 of the New Mexico Hazardous Waste Management Regulations. The application also complies with general guidelines published by U.S. Environmental Protection Agency, "Guidance Manual for Research, Development, and Demonstration Permits Under 40 CFR 270.65" (EPA Document No. EPA/530-SW-86-008, July 1986).

2.0 GENERAL FACILITY INFORMATION

2.1 RCRA Permit Status

It is the intent of the Laboratory to perform all activities in compliance with applicable local, state, and federal regulations and orders. Wastes, effluents, and emissions associated with the RD&D project will be handled according to established LANL procedures that are intended to ensure compliance with these regulations.

In November 1989, the New Mexico Health and Environment Department, Environmental Improvement Division, issued a RCRA permit (No. NM 0890010515-1) to LANL. The RCRA permit covers the storage and treatment of a variety of on-site generated hazardous wastes. Regulated unit processes include storage in containers, treatment in tanks, and incineration. In March 1990, EPA issued its portion of LANL's RCRA permit, addressing the RCRA Hazardous and Solid Waste Amendments (HSWA) requirements. EPA's permit became effective on May 23, 1990.

LANL is also currently regulated under RCRA interim status requirements and is in the process of preparing a permit application covering the facility's mixed waste storage and treatment operations. Mixed waste units at LANL include container storage areas, surface impoundments, storage tanks, a controlled air incinerator, cementation units for process residue, an oxygen sparging unit for pyrophoric mixed waste, and two open burning/open detonation units for treatment of high explosive mixed waste.

As a result of the RCRA permitted and interim status compliance activities, LANL already has in place comprehensive and approved environmental and health management programs meeting RCRA requirements. These programs address overall facility procedures for proper characterization and management of wastes, security, inspection, personnel training, preparedness and prevention, contingency procedures, and facility closure. Operation of the PBR/SDP unit for RD&D purposes will not require development of any additional facility-wide programs or procedures to protect human health and the environment at the LANL facility. Waste analysis, inspection, training, safety, and closure procedures described in this permit application, therefore, are focused on operation of the RD&D unit itself.

LANL is currently in the process of addressing the applicability of National Environmental Protection Act (NEPA) regulations to the operation of the PBR/SDP unit. An initial analysis of

potential impacts has been completed and sent to DOE and it has been determined that the unit meets the criteria for a categorical exclusion.

LANL's Environmental Protection Group (EM-8) is responsible for determining the need for air permits at the facility. As part of the NEPA evaluation process, a non-radioactive air emissions review of the PBR/SDP unit has been conducted by EM-8. It was determined that an air quality permit was not required under New Mexico Air Quality Control Regulation (AQCR) 702 Permits. Anticipated emissions of regulated materials were determined to be well below the AQCR 702 Thresholds.

The names and telephone numbers of the appropriate facility owner and operator contacts are provided below.

Facility Owner/Operator:	Jerry Bellows Area Manager Los Alamos Area Office U.S. Department of Energy Albuquerque Operations 505-667-5105
Facility Operator:	Allen J. Tiedman Associate Director for Support Los Alamos National Laboratory 505-667-9390

2.2 Site Location

LANL and the residential communities of Los Alamos and White Rock are located in north central New Mexico on the Pajarito Plateau, situated west of the Rio Grande on the eastern slopes of the Jemez Mountains. The LANL facility covers approximately 111 square kilometers (27,500 acres) in and adjacent to Los Alamos County, and includes 34 active Technical Areas. A site map is provided as Figure 1.

2.3 RD&D Unit Location

The PBR/SDP unit is located at the Alternative Combustion Laboratory (ACL). The ACL is located in Technical Area 35 (TA-35) in a portion of Building 128. Figure 2 (RD&D Unit Key Map) is provided to shown the location of TA-35 relative to other areas, including TA-9. Another RD&D permit application has been submitted for a research unit located at TA-9. Figure 3 shows the location of Building 128. The PBR/SDP unit occupies an area approximately 55 feet by 70 feet in the northeast corner of the

building. Figure 4 shows the layout of the unit and the associated RD&D ancillary waste storage area at Building 128

A topographic map covering the RD&D unit location has been developed and included in the revised permit application as Figure 5. The topographic map has been prepared at a scale of 1 inch equal to 200 feet and with contour intervals of 2 feet. The map shows a 1000 foot radius around the RD&D unit. Building 128 at TA-35 is located at latitude 35.8624 and longitude -106.2945.

The RD&D unit is located in Los Alamos County, New Mexico, which is listed in 40 CFR Part 264 Appendix VI. The seismicity of LANL is discussed in detail in the Part B Application submitted to acquire the existing facility-wide RCRA permit. As shown in Figure 6 adapted from LANL's 1988 Part B Permit Application, no faults or fault traces with Holocene (or other) displacements have been located within 200 feet of the location of the RD&D unit. Additionally, seismic fault traces have been superimposed on the topographic map prepared for the unit and provided as Figure 5 to the revised permit application. Figure 5 clearly shows that the RD&D unit is not located within 200 feet of a known fault.

In accordance with 40 CFR 270.14(b)(11)(iii) and HWMR-7 Part IX, the PBR/SDP unit is not located in the 100 year floodplain. As required under the Hazardous and Solid Waste Amendment Module VIII of LANL's RCRA Permit, LANL has mapped all 100-year floodplain boundaries within the LANL complex. The mapping procedures used techniques that comply with 40 CFR 270.14(b)(11)(iii). A report documenting these floodplain mapping procedures has been published. Final floodplain maps were submitted to NMED in June 1992. Attachment 8 to the revised permit application includes a copy of the letter sent to NMED with the floodplain maps.

2.4 RD&D Project Description

The purpose of the proposed project is to demonstrate the technical feasibility and performance capability of combined Packed-Bed Reactor (PBR) and Silent Discharge Plasma (SDP) technology for the treatment of hazardous wastes. PBR/SDP treatment will involve use of a pilot-scale unit to demonstrate an innovative hazardous waste treatment technology.

The successful completion of this project will be one step in the eventual development of a full scale treatment system capable of significantly reducing the volume and hazards of several waste streams generated within the DOE production complex. Initially, only RCRA hazardous wastes will be treated in the PBR/SDP unit.

If the treatment demonstration is successful, it is anticipated that LANL may later request a modification or renewal of the permit to include treatment of mixed wastes.

The PBR unit involves use of an alumina pellet filled bed that is heated with an external electrical furnace. Liquid organic hazardous wastes are injected along with a carrier gas (air) into the PBR where many of the hazardous compounds undergo vaporization and thermal decomposition. More complex hazardous organic compounds may resist thermal decomposition within the PBR and, therefore, require further treatment. As part of the proposed RD&D activities, this further treatment will be provided by the SDP unit. Figure 7 shows the components of the PBR unit.

SDP treatment is an advanced oxidation technique that will be used for second stage treatment of effluents from the PBR unit. SDP technology involves the use of a non-thermal electrical-discharge plasma. Large quantities of reactive free radicals are generated in the plasma, and the free radicals react with and decompose the remaining hazardous organic constituents in the effluent. In contrast to thermal processes, the SDP operates at near-ambient temperature and pressures, thereby eliminating complications typical of thermal treatment. Figure 8 shows a cross-section of the SDP unit.

The end products of the PBR/SDP waste treatment process include primarily carbon dioxide, water, carbon monoxide, acids, and trace quantities of unreacted waste and reaction by-products.

Figure 9 illustrates the combined PBR/SDP process for treating organic liquid wastes, where the system will be operated in an open-loop configuration. Figure 10 illustrates the combined PBR/SDP system in a closed-loop configuration. The closed-loop system will eliminate the venting of the treated effluent gas to the atmosphere.

A more detailed discussion of the design and operation of the RD&D unit is provided in Section 4 and Section 5 of this application.

3.0 WASTE DESCRIPTION

The research objective of the work to be conducted under this permit is to determine if process data for a real waste stream is comparable with data produced for surrogates of that waste stream. The answer will determine if the present technology is worth pursuing on a more complex and hazardous waste in future research. Components of the waste selected for testing under a

RD&D permit have been tested individually in the unit as surrogate (i.e., non-waste) materials. These tests have demonstrated 99.99% destruction of the surrogates.

The main purpose of obtaining a RD&D permit at this time is to allow the research to continue into a phase where an actual waste may be processed by the unit. If it can be successfully demonstrated that similar destructive efficiencies with the real waste can be achieved as those with the surrogate work, then modifications to this application may be made to deal with different and more complex waste than those proposed at this time.

3.1 Waste to be Treated in the RD&D Unit

The types of wastes that will be tested to determine the effectiveness of the experimental treatment technology are combustible halogenated and non-halogenated organic wastes in liquid or gaseous form. Wastes designated for treatment will originate from operations at the LANL facility. No wastes will be brought from off-site for RD&D treatment in the PBR/SDP unit.

In order to properly manage hazardous wastes at the LANL facility, wastes are chemically and physically characterized in accordance with the approved waste analysis plan contained in LANL's existing RCRA permit. The maximum amount of waste that will be stored at Building 128 awaiting treatment in the PBR/SDP unit will be 55-gallons. Containers of wastes will either be placed in a secondary containment pan or inflatable berm to minimize leakage hazards. The waste storage area is described in further detail in Section 4.4.

Wastes proposed to be treated in the PBR/SDP unit are summarized below. Copies of the laboratory analyses of the wastes are provided in Attachment 1.

Waste Description	Hazardous Waste Code(s)
Oil with 1,1,1-Trichloroethane from cleaning and repairing of vacuum pumps.	F001
Lacquer thinner from cleaning road painting equipment.	D001
Mixture of acetone/ethanol from degreasing oily parts.	F003

The duration of a particular experimental run is typically less than 4 hours. The minimum run will be 1 hour; the maximum run will be 8 hours. The quantity of waste treated in a particular experimental run will depend on the duration of the run and the waste feed rate. The proposed rate of waste feed input is 36 to 108 kilograms per day. Therefore, assuming an average input rate of 72 kg/day and an average 250-day work year, the total amount of waste anticipated to be processed in the unit is approximately 18,000 kilograms.

Wastes will be retrieved from permitted LANL storage areas for treatment in PBR/SDP unit. Facility-wide hazardous waste handling operations are coordinated by LANL's Waste Management Group (EM-7). EM-7 responsibilities include: pick-up of hazardous wastes from LANL generators; characterization of wastes to supplement generator-supplied information (as necessary); proper management of wastes in LANL's RCRA permitted units; and coordination of off-site shipment of RCRA wastes to permitted treatment, storage, and disposal facilities.

Procedures for transporting hazardous wastes will conform to conditions specified in the existing RCRA permit issued to the facility. Wastes transferred to the PBR/SDP unit from a permitted storage unit will be accompanied by LANL's Hazardous Material Transfer Form. Copies of this form will be maintained by the RD&D research group, the transport group, and the waste shipper.

3.2 Wastes Generated by RD&D Treatment

Wastes generated on a continuous basis during PBR/SDP treatment are expected to be primarily carbon dioxide, water, carbon monoxide, acids, and trace quantities of unreacted waste and reaction by-products. The major expected by-products of the waste treatment process are water and carbon dioxide. The treatment process is highly efficient, and is capable of 99.99% destruction of the organic constituents in the wastes. The composition of the trace quantities of unreacted waste (i.e., the potential 0.01% of waste material that may not destroyed in the unit) is described in Attachment 1 to the permit application. The trace quantities of reaction by-products include small amounts of carbon monoxide that may be generated. Additionally, treatment of wastes containing trichloroethylene will produce hydrochloric acid in the system scrubbers and trace quantities of phosgene in the gaseous effluent. Phosgene can be destroyed either by increasing the power to the SDP cells or by scrubbing the phosgene gas out of the effluent in the scrubbers where it is hydrolyzed (decomposed) by water.

The effluent line exiting the PBR and the effluent line exiting the SDP unit will be fitted with acid scrubbers. Here water, acids, corrosion products from constituent reaction with PBR equipment, and trace quantities of wastes and decomposition by-products are collected by the scrubber and neutralized. The wastes collected in the acid scrubbers will be emptied by lab personnel into an appropriate container for subsequent storage, treatment, and/or disposal.

Other residues that may be periodically generated during RD&D experiments include replaced piping, spent filters, and spent activated carbon units. These will also be placed into an appropriate container by lab personnel for subsequent storage, treatment, and/or disposal.

All residues generated by PBR/SDP treatment will be containerized and placed into a RD&D ancillary storage area at Building 128 (see Figure 4). This ancillary storage unit is discussed in further detail in Section 4.4. As the waste containers are filled, LANL's Waste Management Group (EM-7) will be contacted to pick up the waste for subsequent storage, treatment, and/or disposal. Wastes generated during the RD&D experiments will be characterized and managed in accordance with the approved waste analysis plan in LANL's existing RCRA permit. A general waste analysis plan describing general LANL waste characterization procedures is provided as Attachment 2. Specific waste characterization of the effluents from PBR/SDP treatment are discussed in Section 3.3 below and in the Quality Assurance Project Plan provided as Appendix A to Attachment 2.

Emission level evaluations and air permitting for compliance with New Mexico Air Quality Control Regulations are overseen by LANL's Environmental Protection Group (EM-8). Operation of the PBR/SDP unit will comply with New Mexico Air Quality Control Regulations.

3.3 Waste Analysis

It is necessary to have an accurate assessment of the waste stream components, in order to determine the likely decomposition products of the waste undergoing PBR/SDP treatment and to evaluate the effectiveness of the treatment process. Laboratory waste analysis data has been obtained from LANL's Waste Management Group (EM-7), which is responsible for hazardous waste movement, storage, treatment, and disposal at LANL. Copies of the laboratory analytical data for the waste streams are included in Attachment 1.

A Sampling and Analysis Plan (SAP) has been prepared covering RD&D treatment in the PBR/SDP unit. The SAP is incorporated into

the Quality Assurance Project Plan (QAPjP) included in this revised permit application as Appendix A to Attachment 2. The SAP describes procedures to sample and analyze the wastes prior to and following treatment in the PBR/SDP unit.

Waste Analysis procedures described in the SAP are summarized below:

- For each waste type treated in the PBR/SDP unit, LANL personnel will collect a sample of the liquid effluent from the acid scrubber wastewater reservoirs as described in the SAP (Section 5 of the QAPjP). The liquid will be collected using EPA approved sampling methods (e.g., coliwasa, tubing, or equivalent) and analyzed in accordance with EPA approved sampling methods. Analytical methods will include EPA Method 7000 series for metals; EPA Method 9070 for oil and grease; EPA Method 8240 for volatile organics; and EPA Method 8270 for semi-volatile organics. Acidic liquid effluent sampling will be performed each time the scrubber waste reservoir is emptied, as scheduled in the QAPjP (Section 5) provided as Appendix A to Attachment 2, and whenever there is a known change in the relative constituent composition of the treatment system input waste.

- Gaseous effluents will be collected as specified by EPA Method 0030 (SLO-VOST) and analyzed by EPA Method 8240 for volatile organic constituents. A complete set of samples (one from each of the four monitoring points shown on Figures 9 and 10) will be collected for analysis as described in the SAP (Section 5 of the QAPjP).

- Additionally, other diagnostic equipment may be used for the research effort. In order to monitor the stability of the system, the gaseous effluent downstream of the PBR and SDP may be analyzed with several on-line diagnostic instruments including: Teledyne Max5 combustion gas analyser (CGA), Beckman Acculab 2 IR spectrometer, Perkin Elmer Sigma 2000 Gas Chromatograph (GC) with both flame ionization and electron capture detector (which allows ppb-detection and sensitivity), UTI Model 100C 0-300 amu mass spectrometer, BIORAD FTIR spectrometer, and ultraviolet absorption cell (or equivalent instruments). These diagnostic instruments provide a means for accurate assessment of gaseous waste stream composition. Analytical methods will be clearly documented and described in the operating record for the RD&D unit.

- The GC and FTIR spectrometer may be operated continuously during the RD&D experiments if necessary to monitor the stability of the treatment process. It is anticipated that the process will be stable and that continuous monitoring may not be necessary. The other diagnostic equipment (i.e., GCA, IR spectrophotometer, mass spectrophotometer, and ultraviolet absorption cell) may be available to provide supplemental data. Figure 9 and Figure 10 show the diagnostic equipment monitoring points that may be used during RD&D experiments. Sampling points will be selected based on the data that is to be collected during a particular experiment. Attachment 3 describes the research-specific diagnostic equipment performance in further detail.

4.0 PROCESS ENGINEERING

4.1 Description of Treatment Unit

4.1.1 Waste Feed System

An aliquot of liquid waste will be transferred from the waste container and placed into a graduated burette, which will allow a precise determination of the volume of waste to be treated. Waste will be introduced into the PBR/SDP treatment system using either a peristaltic feed pump or a magnetically coupled gear pump. The gear pump will be used for experiments requiring a higher waste flow rate, whereas the peristaltic pump can be used for lower waste flow rates. Carrier gas, which will consist of air, will be introduced into the system along with the waste. An air compressor will be used in conjunction with an atomizer to inject the waste and carrier gas into the PBR furnace unit.

4.1.2 Packed-Bed Reactor Unit Components

Up to three PBR units will be operated for the RD&D experiments. Each PBR furnace unit will consist of a 15-centimeter inner diameter stainless steel pipe with three equally-sized zones that can be independently heated to maintain constant temperature in the PBR. The length of each PBR furnace will be between 1 and 1.5 meters. The PBR pipe will be filled with 1.27-centimeter (0.5-inch) long alumina cylinders and 0.476-centimeter (0.1875-inch) diameter alumina spheres. The heat source surrounding each PBR will be an external electrical tube furnace, with three equally-spaced and independent heating zones. There are three temperature sensors on each of the three furnace segments used to control furnace temperature. Prior to injection

of waste into the unit, the PBR will preheated to a given temperature, depending on the experimental parameters being tested. During actual treatment, the heat generated from waste decomposition may reduce or eliminate the need to continue to operate all three zones of the external furnace.

Downstream of the PBR will be a heat exchanger and acid scrubber. The heat exchanger will be constructed with a simple counter flow design consisting of an inner tube through which the gaseous effluent flows and an outer tube through which non-contact cooling water is circulated. The scrubber will be a portable unit (e.g., Mystaire brand or equivalent) fitted with a reservoir that will recirculate the scrubber water to remove acids from the effluent gas for the duration of a particular experiment. A second reservoir will contain neutralization solution (potassium hydroxide). Neutralization of the acid gases will produce potassium chloride. The pH of the scrubber water will be monitored using an on-line pH meter to determine when neutralizing solution is spent and, consequently, when the scrubber wastewater reservoir should be emptied. At a minimum, the scrubber wastewater reservoir will be emptied whenever the RD&D waste stream being studied is changed. Waste management is discussed in Section 3.2.

From the acid scrubber, the effluent gas will pass through a polypropylene filter, which will catch any extra liquid or particulates that have made it past the heat exchanger and acid scrubber. The replacement of the filter will depend on the waste treatment flow rate. The estimated filter change interval will be once per week for waste treatment of 36 kilograms/day and twice per week for waste treatment of 108 kilograms. The actual replacement rate will be determined during the course of the experiments. At a minimum, the filter will be changed whenever the waste stream being studied is changed. Waste management is discussed in Section 3.2.

The PBR interior furnace piping, piping to the heat exchanger/scrubber, and interior portions of the heat exchanger will be constructed of a corrosion resistant metal (e.g., Haynes alloy or Hastealloy). Once the corrosivity of the effluent gases has been reduced in the scrubber, less corrosion-resistance material is required. The piping from the heat exchanger/scrubber through the polypropylene filter to the SDP cells will be constructed of stainless steel.

4.1.3 Silent Discharge Plasma Unit Components

Up to three SDP cells will be operated for the RD&D experiments. The cells can be set up to run either in parallel or in series,

depending on the treatment needs and flow requirements of a particular experiment. Each SDP unit will consist of two electrodes, both of which are covered with a dielectric layer (e.g., glass) to separate the electrodes from the gas effluent to be treated. The gap between the dielectric layers will have an approximate effluent processing volume of 0.5 liters in each cell. Silent discharge plasmas are usually produced with near ambient pressure (1 to 3 atmospheres) electrical discharges. With the use of a dielectric barrier and application of alternating high voltages, large quantities of plasma are generated by microdischarges in the gas between the electrodes. These discharges, which are transient, typically develop in only a few nanoseconds. Due to the short duration of the microdischarges the electrical energy is mainly coupled into electron channels. The energetic electrons effectively create free radicals in the effluent gas. The free radicals generated by the plasma react with organic compounds in the effluent gas stream, primarily producing carbon dioxide, water, acids, and trace levels of unreacted wastes and waste decomposition by-products.

The principal electrical power supply is a series invertor that switches charged capacitors through a high-quality pulse transformer by means of a high-power thyristors. The unit can supply nearly 4 kilowatts of power at voltage pulse repetition frequencies of up to 4.5 kilohertz. The electrical power deposited into the discharge plasma is measured using a high-voltage probe combined with a charge-transfer bridge. Integration of a voltage-charge plot obtained from these two instruments gives the measured power.

Downstream of the SDP unit, the effluent gas will pass through an acid and carbon dioxide scrubber (e.g., Mystaire brand or equivalent). The scrubber will be a portable unit fitted with a reservoir that will recirculate the scrubber water to remove acid and carbon dioxide from the effluent gas for the duration of a particular experiment. A second reservoir will contain neutralization solution (potassium hydroxide, KOH). Neutralization of the acids will produce potassium chloride. The pH of the scrubber water will be monitored using an on-line pH meter to determine when the neutralization solution is spent and, consequently, when the scrubber wastewater reservoir should be emptied. At a minimum, the scrubber wastewater reservoir will be emptied whenever the RD&D waste stream being studied is changed. Waste management is discussed in Section 3.2.

The piping from the SDP cells to the second treatment system scrubber will be constructed of stainless steel material. Since the acid scrubber will reduce the corrosivity of the effluent

gases, less corrosion-resistant material is required for those portions of the system downstream of the scrubber. The piping leading from the scrubber to the Building 128 vent (for open-loop) or back to the waste feed portion of the system (for closed-loop) will be constructed of either PVC or copper material.

4.3 Pollution Control

A backup, safety pollution control device is necessary only when the system is operated in an open-loop configuration, with effluent gases vented to the atmosphere. Figure 9 shows the treatment system components in an open-loop configuration. Prior to being exhausted through the Building 128 vent, the effluent gas stream will pass through a granular activated carbon unit. The carbon unit is in place to prevent the accidental release of hazardous substances to the atmosphere, in case of PBR/SDP unit malfunction. The carbon unit will also serve to absorb unreacted wastes or organic waste decomposition by-products. A pressure monitoring gauge will be installed either side of the carbon unit and a pressure drop across the unit will be used to signal that the carbon is spent and requires replacement. Waste management is discussed in Section 3.2.

The granular activated carbon unit will not be used when the PBR/SDP is operated in a closed-loop mode. Figure 10 shows the treatment system components in a closed-loop configuration. In the closed-loop setup, the effluent gas will be recirculated into the system to serve as a carrier gas for continued waste treatment. No effluent will be vented to the atmosphere.

4.4 Ancillary Waste Storage Area

The ancillary RD&D hazardous waste storage area will only be operated for the duration of the RD&D permit, and will not be used to manage wastes other than those specifically associated with PBR/SDP treatment. The EPA RD&D Guidance Manual specifically allows for the storage of hazardous wastes associated with RD&D activities, without the need to permit the storage area. RD&D guidance allows for storage of up to 15,000 kilograms of hazardous waste intended for experimental purposes.

The ancillary hazardous waste storage area associated with the PBR/SDP unit will include up to 55-gallons of waste awaiting treatment, up to 55-gallons of waste from the acid scrubbers, and up to 55-gallons of other solid wastes (e.g., spent filters, replaced piping).

The waste containers will be placed in secondary containment (e.g., pan or inflatable berm) on the concrete pavement outside and adjacent to Building 128. The secondary containment will be sized to accommodate both ten percent of the total waste volume stored in the ancillary unit and the entire contents of the largest container that may be managed in the unit (in this case, 55 gallons). The storage unit will also be covered to prevent precipitation run-on and run-off. Figure 4 shows the location of the RD&D hazardous waste storage unit.

4.5 Operating Parameters

The effectiveness of PBR/SDP technology can be determined through a variety of combinations of operating parameters and controls. The major operating parameters that can be controlled and varied during the operation of the unit are:

- Open-loop versus closed-loop system configuration;
- Number of packed-bed reactors;
- Number of silent discharge plasma cells;
- Temperature of packed-bed reactor;
- Input waste flow rate;
- Oxidizing gas flow rate;
- SDP cell voltage;
- SDP cell voltage pulse repetition.

The application of these control parameters is further explained in the following Section 5.2.

5.0 RESEARCH PLAN

PBR/SDP treatment will involve use of a pilot-scale unit to demonstrate the technical feasibility and performance capability of an innovative hazardous waste treatment technology. It is anticipated that this system has the potential to destroy hazardous waste organic constituents with a higher efficiency and without the production of typical undesirable high-temperature combustion products of present treatment technologies. It is believed that full-scale development of this system would provide distinct improvements over currently available treatment technologies, such as incineration, in terms of both destruction efficiency and effluent gas composition.

LANL has identified a need to explore alternative technologies for the treatment of hazardous organic wastes. LANL has already evaluated the SDP process as a post-incinerator treatment process for oils and solvents using surrogate products. Encouraging results from that evaluation has led to the construction and

testing of a combined, two-stage packed bed reactor (PBR/SDP) unit.

This section describes the parameters to be varied and monitored, general methods of sampling and analysis, and inspection procedures to be conducted under the RD&D permit.

5.1 Objective

The research objective of the work to be conducted under this permit is to determine if process data for a real waste stream is comparable with data produced for surrogates of that waste stream. The answer will determine if the present technology is worth pursuing on a more complex and hazardous waste in future research. Components of the waste have been tested individually in the unit as surrogate (i.e., non-waste) materials. These tests have demonstrated 99.99% destruction of the surrogates.

The main purpose of obtaining a RD&D permit at this time is to allow the research to continue into a phase where an actual waste may be processed by the unit. If it can be successfully demonstrated that similar destructive efficiencies with the real waste can be achieved as those with the surrogate work, then modifications to this application may be made to deal with different and more complex waste than those proposed at this time.

The objective of the RD&D permit will be to obtain data from the use of the PBR/SDP unit by treating hazardous wastes under several different operating conditions. Liquid hazardous wastes will be chosen from those wastes in storage at LANL and are described in Section 3.1. The results of the work under this permit is anticipated to demonstrate the complete (greater than 99.99%) destruction of the hazardous constituents of the waste samples.

To date no wastes have been treated in the proposed RD&D unit. Several raw material (i.e., non-waste) surrogates have been tested to evaluate the effectiveness of the unit in treating organic constituents. A copy of a paper titled "Nonthermal Plasma Alternative to the Incineration of Hazardous Organic Wastes" that was submitted to the 11th International Incineration Conference in May 1992 is provided as Attachment 11 to the revised permit application. As summarized in this paper, PBR treatment has been conducted on mixtures of commercial cutting oil containing up to several percent trichlorethylene (TCE), trichloroethane (TCA), and carbon tetrachloride (CCl_4). These experiments have demonstrated that when the PBR unit is operated

alone the unit is capable of removal of TCA down to the parts per million level and removal of TCE and CCl_4 down to approximately 100 parts per billion level. When the SDP unit has been operated alone, removal of >>99% TCE and 90% CCl_4 have been noted. When the PBR/SDP unit treatment is combined, as proposed under the RD&D permit, mixtures containing several percent chlorocarbon concentrations have been removed to well below the 100 parts per billion level.

5.2 Operating Parameters and Monitoring Frequency

The hazardous waste streams to be tested under the RD&D permit are identified in Section 3.1. Under the RD&D permit, optimization of the PBR/SDP operating parameters will be refined and possible PBR/SDP limitations for treating the selected wastes will be determined. Furthermore, the specific system configuration and need for additional components will be reviewed for possible enhancement of the PBR/SDP system. Specific components included in this review may include atomizers, bed materials, pumps and compressors for injection, component construction materials, heat exchanger design, and external furnace configuration.

Bench-scale studies for several operating parameters have already been conducted using surrogate materials. PBR/SDP work with surrogate materials, similar to those proposed under this permit, has not exceeded any LANL safety or environmental criteria. Using this previously gathered information, the research planned under the RD&D permit would be conducted using the following operating parameters.

Operating Parameter	Experimental Range
System configuration	open or closed loop
Number of PBR units	1 to 3 units
Number of SDP cells	1 to 3 cells
Packed-bed temperature	250 to 1300 °C
Input waste flow rate	36 to 108 kg/day
Oxidizing gas flow rate	Up to 1460 l/min
SDP cell voltage	Up to 4 kilowatts
SDP cell voltage pulse repetition	Up to 4.5 kilohertz

Mass balance calculations will be performed for each experiment to determine the final outcome of the hazardous waste constituents.

5.3 Monitoring Plan

Monitoring equipment includes systems for process control and effluent and emission analysis that enable the operator of the PBR/SDP unit to take those measurements necessary to demonstrate that the unit is operating in a controlled and safe manner, is not presenting a hazard to human health and the environment, and is in compliance with permit conditions.

The PBR/SDP unit is described in Section 4 and shown in Figure 9. The monitoring system involves process monitoring and effluent and emissions monitoring.

5.3.1. Process Monitors

The PBR/SDP treatment units are operated as a computer controlled system. Process monitoring includes the metering of gas flow rate, temperature, pressures, SDP cell voltage and current, and consumed electrical power, to provide for stable and safe operation of the PBR/SDP unit. Temperature sensors from the PBR unit(s), electrical power at the SDP cells, gas pressure and data from the on-line diagnostic equipment are all computer monitored. The system is designed to optimize hazardous waste destruction so that no more than one part per million of total hydrocarbons is detected in the effluent, as measured by the on-line diagnostic equipment. If the treatment system is not performing to the required minimum destruction level, the computer will shut off the waste feed rate and adjust the PBR temperature and SDP energy supply to increase the destruction efficiency of the system.

If the computer-monitored temperature in the PBR or the gas pressure in the SDP becomes too high, the system is designed to automatically shut off. Equipment shut down is discussed in detail in Section 5.3.3.

5.3.2. Emissions and Effluent Monitors

As stated in Section 3, wastes generated during PBR/SDP treatment are expected to be primarily carbon dioxide, water, carbon monoxide, and acids, with traces of corrosion products from reaction of acidic effluent gases with process equipment, and traces of unreacted wastes and other combustion by-product gases. Monitoring of PBR/SDP effluents will parallel the accumulation of operating parameter and process data in order to analytically

confirm these data, in addition to evaluating the effectiveness of the PBR/SDP technology.

The composition of the gaseous effluent stream may be analyzed with several on-line diagnostic instruments including: Teledyne Max5 combustion gas analyser (CGA), Beckman Acculab 2 infrared (IR) spectrometer, Perkin Elmer Sigma 2000 Gas Chromatograph (GC) with both flame ionization and electron capture detector (which allows ppb-detection and sensitivity), UTI Model 100C 0-300 amu mass spectrometer, a BIORAD FTIR spectrometer, and an ultraviolet absorption cell (or equivalent instruments. Figure 9 and Figure 10 show the available sampling locations in the PBR/SDP system. The diagnostic equipment will analyze the effluent from one or more sampling ports, depending on the data to be collected during a particular experiment. The diagnostic and monitoring equipment will provide a real-time indication of treatment performance. Although not all diagnostic equipment may be operated simultaneously, at a minimum, the gas chromatographic and FTIR spectrometer will be operated continuously. Other diagnostic equipment will operated intermittently to provide supplemental data. Attachment 3 describes the research-specific diagnostic equipment performance in further detail.

The pH of the scrubber water will be monitored using an on-line pH meter to determine when neutralizing solution in each acid scrubber is spent and, consequently, when the scrubber wastewater reservoir should be emptied. Samples will be collected of the acid scrubber wastewater as described in Section 3.3.

5.3.3 Equipment Shut Down

Any upset condition that affects the unit's ability to perform within permit requirements or that poses a threat to human health or the environment will be cause for shut down of the unit. Malfunction of either the PBR or the SDP will also be cause to terminate an experiment. Equipment shut down will include immediate shut down of the waste feed system, continued input of the carrier gas to purge the system, and safe shut down of the remaining electrical, mechanical, and diagnostic equipment components. Shut down procedures to be followed in the event of an emergency are described in the Standard Operating Procedures (SOP) in Attachment 4.

Additionally, the PBR/SDP system is computer controlled. When unsafe temperatures in the PBR or high pressures in the SDP cells are detected, the computer is programmed to automatically shut off the waste feed system first, and then to shut off the PBR and SDP units.

5.4 Inspection Procedures

Routine inspections of the PBR/SDP treatment unit equipment components are conducted to identify equipment malfunction, deterioration, and operator errors that might lead to a release of hazardous waste to the environment and pose a threat to human health and the environment. Additionally, the ancillary hazardous waste storage area will be inspected to ensure that no releases to the environment have occurred or may potentially occur. Inspections will be conducted every day that the PBR/SDP system is operated, to identify problems promptly and allow for timely repair and cleanup. Research operators of the PBR/SDP unit will be responsible for conducting inspections, and originals of the inspection records will be kept in an inspection logbook by the RD&D research group. Inspection records will be retained for a minimum of three years from the date of inspection. Copies of the inspection records will be submitted to the Environmental Protection (EM-8) group, Hazardous and Solid Waste Section, at the end of each work week. A copy of the unit-specific inspection checklist developed for the PBR/SDP system and associated waste storage areas is included as Attachment 5.

If an inspection indicates that corrective action measures are warranted, any and all actions taken, along with time, date, and other pertinent information, will be recorded on the inspection form and all subsequent inspection forms until corrective measures are completed. If a condition is found in which a release to the environment is imminent or has already occurred, the condition will be assessed by the RD&D supervisor or a designated representative. If this assessment indicates that human health or the environment may be adversely affected, the Contingency Plan, provided as Attachment 6, will be implemented.

Aisle space is maintained around the PBR/SDP unit to allow unobstructed movement of personnel and any fire protection equipment, spill control equipment, or decontamination equipment that may be needed to respond to an emergency at the treatment unit. The actual size of the unit is relatively small and occupies only a small portion of the building in which it is located. Figure 4 to the revised permit application provides a schematic of the system location and associated work areas. Aisle space will be actively maintained through inspections of the area to be performed each day that the unit is operated.

Quarterly Environmental Safety & Health (ES&H) inspections of Building 128 are also conducted by the group ES&H officer in conjunction with one or more of the following personnel: group leader (or delegate), division EH&S committee member, division

office representative, and a Health and Safety (HS) division representative. Both Occupational Safety Health Administration (OSHA) and RCRA deficiencies are noted during the quarterly inspection. Items covered include: Signs and other postings, SOP availability, Material Safety Data Sheet (MSDS) availability, waste handling procedures, provisions for spills of hazardous materials, fire extinguishers, personal protective equipment availability, housekeeping, chemical storage, compressed gas cylinder storage, ventilation, and building perimeter. Deficiencies noted during the inspection are recorded in a memo, which prioritizes the deficiency (i.e., imminent danger, serious risk, low risk, minor condition) for attention and corrective action. Records of the inspections are maintained by the group leader and group ES&H officer.

Additionally, equipment and operation procedures are described in the current SOP developed for the unit. A copy of the SOP is provided as Attachment 4. Problems related to equipment or operational malfunction, deterioration, or operator error will be recorded in the logbook that will be maintained throughout the RD&D project. Details of the corrective action measures taken in response to these errors will also be recorded in the project logbook.

6.0 QUALITY ASSURANCE/QUALITY CONTROL

6.1 Calibration Procedures

It is essential that equipment used during PBR/SDP treatment be periodically calibrated to ensure proper operation of the unit and to ensure protection of human health and the environment.

Flow meters and temperature gauges will be factory calibrated and will not be adjusted for the duration of the RD&D experiments.

Effluent pH monitors and research-specific diagnostic equipment including the Teledyne Max5 combustion gas analyser, Beckman Acculab 2 IR spectrophotometer, Perkin Elmer Sigma 2000 Gas Chromatograph, a UTI Model 100C 0-300 amu mass spectrometer, and BIORAD FTIR spectrometer will be calibrated by LANL researchers using gas samples of known concentrations. Additionally, the FTIR contains a built in calibration library.

The high voltage electrical equipment is calibrated on a routine basis by the ENG-9 calibration lab.

7.0 DATA AND RECORDKEEPING

Data on PBR/SDP operating parameters (feed rate, temperature, air flow), treated waste volume, and effluent composition as analyzed by on-line diagnostics equipment will be collected on a continuous basis. This data will be collected in the automated computer system databanks. Specifically these data include:

- Input waste feed rate into the PBR,
- Input gas feed rate into the PBR,
- PBR temperature,
- Effluent gas flow rate after the PBR
- Effluent gas flow rate before the SDP
- Effluent humidity and temperature after the PBR unit,
- Pressure in the packed bed,
- SDP cell power (voltage, charge, repetition),
- pH of the acid scrubbers solution,
- Effluent carbon dioxide, oxygen, and carbon monoxide composition.

LANL's project monitoring records for data gathering and analysis of the effluent shall include:

- Date and time of sampling,
- Sampling location,
- Name of individual(s) who performed the sampling or measurements;

Environmental monitoring for protection of human health and the environment is an integral part of the overall research program. Continuous computer monitoring of the temperature and pressure in system ensures safe operating conditions, and monitoring of the effluent enables the researchers to evaluate treatment effectiveness.

Data will be recorded in facility logbooks, and in the diagnostic instrument computer databases. At a minimum, all process monitoring (flow, temperature, pressure) will be conducted at hourly intervals during operation of the PBR/SDP unit, or whenever operating parameters are changed. Mass balance calculations will also be performed to determine the final outcome of the hazardous waste constituents.

The on-site analytical laboratory performing the EPA analytical methods will submit summary reports of analytical results to the research project manager. At a minimum the summary reports shall contain (1) laboratory review/approval date and signature (2) date sample received; (3) sample preparation date; (4) sample

analysis date; (5) preparation and analysis method reference; (6) sample identification number; (7) laboratory sample identification number; (8) sample reporting or detection limit; (9) laboratory quality control sample results including calculated percent recoveries, relative percent differences and self-imposed control limits, if applicable; and (10) dilution factors, if required for sample analysis.

Records will be stored in a file cabinet in the Chemical and Laser Sciences (CLS) lab. Reports summarizing the findings of the RD&D project will be prepared on a monthly basis. Copies of the monthly reports will be submitted to the New Mexico Environment Department.

8.0 SAFETY PLAN

The PBR/SDP unit is located inside Building 128 at TA-35. The Building 128, which is constructed of concrete, sheet metal and metal beams, is structurally sound and secure against unauthorized entry through the walls, roof, or vents. The room is actively monitored by research personnel during daytime hours, and no unauthorized personnel or unescorted visitors are allowed into this research building. LANL's security force regularly patrols the areas outside of and surrounding Building 128. During off-hours, the doors to Building 128 are locked to prevent unauthorized entry. TA-35 is surrounded by a barbed-wire topped chain-link fence. During off-hours the gate to TA-35 is closed and locked and LANL's security force regularly patrols the area. The entrance to Building 128 is posted with a sign reading "Authorized Personnel Access Only."

The Safety Plan implemented for the RD&D unit will complement those procedures approved in LANL's current RCRA Contingency Plan contained in the facility's RCRA permit authorized November 1989 and those procedures specified in the "RCRA Interim Status Contingency Plan for Mixed Waste Units" prepared May 1992.

A modified Contingency Plan, which addresses general emergency procedures applicable to the RD&D unit, has been included with this application as Attachment 6.

An analysis of hazards related to the PBR/SDP unit has been performed by project personnel, group safety personnel, the building manager, and interactions with Health Safety and Environmental Management personnel. Administrative control measures include personnel training and development of Standard Operating Procedures (SOP). Engineering control measures include warning lights and alarm systems, electrical current breakers,

protective shielding panels, electrical circuit designs, and pollution control equipment.

The PBR/SDP unit was configured to minimize hazards and appropriate measures were taken to conduct safe operations and to minimize potential emissions. Building 128, where the RD&D unit is located, is equipped with the following safety systems:

- Fire detection/alarm/annunciator system;
- Fire suppression (sprinkler) system;
- Ventilation system

The PBR/SDP unit operates with the following safety features:

- Containers of hazardous wastes will be covered and stored in a secondary containment to minimize leakage hazards and precipitation run-on/run-off problems.
- Waste injection line is equipped with a solenoid valve that will automatically shut off waste flow into the PBR, in the event that there is a cessation of oxidizing gas (oxygen and argon, or air) into the unit.
- External shielding around the PBR unit prevents contact with the heating elements.
- The PBR/SDP system is computer controlled and designed to automatically shut down when unsafe PBR temperature and SDP cell gas pressure are detected.
- The computer controlled system is designed to monitor destruction efficiency. When minimum destruction requirements (i.e., no more than 1 part per million total hydrocarbons) is not being achieved by the system, the computer will shut off the waste feed, but continue to operate the PBR/SDP components to treat the remaining waste already present in the system.
- The SDP cell is enclosed in a box constructed of polycarbonate panels. This box is interlocked with the high voltage power supply system. Any attempt to access the SDP cell during operation shuts off the power supply.

- Red flashing high voltage warning light on main high voltage power supply equipment is activated when power supply in on.

- Power supply is equipped with an emergency high-voltage shut-off button.

- Final effluent gas stack is equipped with a back-up granular activated carbon absorber to prevent the accidental release of hazardous substances in case of PBR/SDP unit malfunction during open-loop system operation.

A summary of potential hazards and mitigating measures is provided below.

- **FIRE HAZARDS**

  Hazard Description: Packed-bed reactor is heated by furnace and oxidizes organic liquids at high temperatures. Electric equipment can be a fire hazard. Flammable materials and wastes also pose a potential fire hazard.

  Potential Effects: Personnel injury; equipment damage.

  Safety Measures: Packed-bed reactor is not pressurized and is operated with very lean fuel mixture to prevent ignition, deflagration, and explosion. Furnace heating elements are in vendor-supplied enclosures. Additional heat shields are provided for exposed hot plumbing. Computer controlled system will shut down PBR/SDP when excessive temperatures are detected. Building is equipped with electronic heat/smoke detectors, building-wide alarm system, sprinkler system and fire extinguishers. All operating personnel will be properly trained to recognize hazards and respond to emergencies.

- **ELECTRICAL HAZARDS**

  Hazard Description: Power supplies, furnaces, computer equipment, diagnostics equipment, and tools use 115/208 volt service. SDP unit uses high-voltage (5 to 30 kV) equipment.

Potential Effects: Personnel injury from electrical shock; equipment damage.

Safety Measures: Electrical safety system contains high voltage warning lights, emergency shut-off switch, and enclosure/cabinet interlocks. Red flashing high voltage warning light is mounted to main high voltage power supply cabinet and is activated when high voltage supply is on. Emergency high voltage shut-off button is a prominent red button that interrupts high voltage supply under emergency conditions. Electrical interlocks prevent operation of high-voltage power supply if plasma cell enclosure or power supply cabinet door is not in place or properly closed. Electrical equipment will be properly grounded. All operating personnel will be properly trained to recognize hazards and respond to emergencies. All personnel involved in potentially hazardous high voltage operations must work in pairs.

- **CHEMICAL HAZARDS**

Hazard Description: Hazardous liquid organic wastes are treated in unit. Cleaning agents and solvents, such as acetone and alcohol, are used during equipment assembly and maintenance.

Potential Effects: Personnel injury; equipment damage; fire.

Safety Measures: Hazardous wastes containers in the RD&D ancillary storage area will be placed in a secondary containment and covered to minimize leakage hazards and prevent precipitation run-on/run-off. Cleaning agents and solvents will be stored in chemical cabinet. MSDSs are kept in notebook file at RD&D unit. Rags containing cleaning solvents will be disposed of in approved containers. Containers are emptied by personnel with waste generator training at the Building 128 satellite storage area. Ventilation system consists of through-the-wall fan with capacity of 100 cubic feet per minute. PBR/SDP exhaust stack will be equipped with back-up activated carbon canister to prevent accidental release of hazardous constituents in case of equipment malfunction during open-loop system operation. Concentrations of hazardous gaseous effluents is monitored by associated diagnostic instruments. Building 128 is equipped with emergency

eye wash station. Chemical residues generated during RD&D treatment will be managed in approved containers and temporarily in Building 128 satellite storage area. Wastes will be removed from satellite storage area by LANL's Waste Management Group (EM-7) in accordance with procedures outlined in the existing RCRA permit for the facility.

- **MECHANICAL HAZARDS**

  Hazard Description: Routine mechanical assembly and lifting operations are carried out at the RD&D unit. Accidents involving tools, fixtures, and lifting devices have the potential to cause personnel injury or equipment damage.

  Potential Effects: Personnel injury; equipment damage.

  Safety Measures: Only approved lifts and hoists will be used. Personnel will exercise caution in the use of hand and power tools, wearing protective equipment such as safety glasses. Tripping and slipping hazards will be mitigated by proper storage of equipment and housekeeping.

- **COMPRESSED GAS HAZARDS**

  Hazard Description: Compressed gases in bottles through K-size and pressures up to 3000 psi are normally used at the unit. There are no pressure vessels in the facility, both packed-bed and plasma cells operation at only 1 to 3 psi pressure differentials.

  Potential Effects: Personnel injury; equipment damage; chemical release.

  Safety Measures: Personnel will receive training in the use of compressed gases and associated regulators, valves, gauges, and plumbing. Proper regulators will be used for various gases and gas cylinders. Check valves are installed on equipment to prevent build-up of hazardous stored compressive energy and consequent mechanical failure. PBR unit is equipped with thermocouples and mechanical gauges that measure the temperature and pressures generated in the packed-bed.

Unit operators monitor temperature and pressure in order to prevent explosions from occurring.

9.0 PERSONNEL QUALIFICATIONS AND TRAINING

Dr. Louis A. Rosocha will lead the RD&D program for the PBR/SDP unit. He is principal investigator for this project and has overall responsibility for technical and program leadership, guidance, and interfacing. A copy of Dr. Rosocha's resume is provided in Attachment 7. Personnel authorized to operate the PBR/SDP system and their duties are described below. Other qualified and suitably trained personnel may also be authorized to perform the RD&D experiments.

Name	Responsibility
John Coogan	Scientific and Technical Oversight, Daily Operations, Analytical Diagnostics, Process Modelling
Roger Tenant	Mechanical Engineering Support
Mike Kang	Electrical Engineering Support
Graydon Anderson	Analytical Diagnostics and Instrumentation
Rudy Vargas	Overall Technician Support
Heidi Heck	Analytical Diagnostics and Instrumentation
Laurie Bechtold	Process Modelling

LANL's personnel training program conforming to RCRA requirements is managed by the Risk Management Support Group (HS-3) of the Health and Safety (HS) Division. Records of formal training for each person who manages hazardous waste is maintained in the HS-3 training office. At a minimum, all PBR/SDP operations personnel will receive the following training. Summaries of the training courses are provided in Attachment 8.

- General Employee Training (GET)
- Introduction to Hazard Communication

- OSHA Hazardous Waste Operations (29 CFR 1910.120) and Refresher Course (as necessary)
- Waste Generator Training
- CPR - Adult
- First Aid - Standard
- Electrical Safety Awareness Training
- Pressure Safety: Compressed Gas Systems
- Contingency Plan/Spill Prevention, Control and Countermeasure (SPCC) Plan

Division and group leaders and immediate supervisors are responsible for ensuring that education and training in site-specific emergency response procedures and in LANL's emergency response program are also provided. Periodic unannounced emergency drills and exercises are used to familiarize employees with emergency procedures.

Additionally, authorized personnel will receive unit-specific training in Standard Operating Procedures (SOP). A copy of the current SOP is provided as Attachment 4. The SOP is reviewed at least annually and updated when necessary. Review and revision of SOPs is directed by LANL's Environmental Protection Group (EM-8).

The safety training records of new staff are reviewed upon assignment to the research unit. Additional training will be designated as necessary. Individual training records of operations personnel will be reviewed annually by the team leader. All new LANL employees will receive appropriate training within six months of their date of hire or transfer. Personnel will not work in unsupervised positions until they successfully complete the appropriate levels of training for their position and responsibilities. Attachment 8 contains copies of training records for the research personnel.

10.0 CLOSURE PLAN

Upon completion of the RD&D experiments, the PBR/SDP unit will be clean closed in a manner protective of human health and the environment. Upon closure all hazardous wastes and hazardous waste residues will be removed from the unit and the area surrounding the unit. No post-closure care will be required. A

description of the procedures to close the unit are provided in Attachment 10 of this application.

11.0 DURATION OF PERMIT

LANL requests that the RD&D permit be issued for a one year period. It is anticipated that a one year time frame will be necessary to collect sufficient data to adequately test the technical feasibility and performance capabilities of the PBR/SDP unit.

Additionally, due to logistics involved in coordinating start-up of the RD&D unit, LANL requests some flexibility in determining when the official start date of the permit will begin. LANL wishes to negotiate with the New Mexico Environmental Department a mechanism to determine a mutually agreeable permit start date.

LANL may request a renewal of the permit at a later time, in accordance with limitations specified in 40 CFR 270.65(d), to test other equipment components or other waste streams.

12.0 CERTIFICATION

I certify under penalty of law that this document and all attachments were prepared under my direction or supervision in accordance with a system designed to assure that qualified personnel properly gather and evaluate the information submitted. Based on my inquiry of the person or persons who manage the system, or those persons directly responsible for gathering the information, the information submitted is, to the best of my knowledge and belief, true, accurate, and complete. I am aware that there are significant penalties for submitting false information, including the possibility of fine and imprisonment for knowing violations.

_____
Name/Title

_____ _____
Signature Date

_____
Name/Title

_____ _____
Signature Date

Revision 2
7/14/93

ATTACHMENT 1

WASTE PROFILE INFORMATION

Los Alamos National Laboratory

RD&D PERMIT

Revision 2
7/14/93

FIGURE 1

Site Map

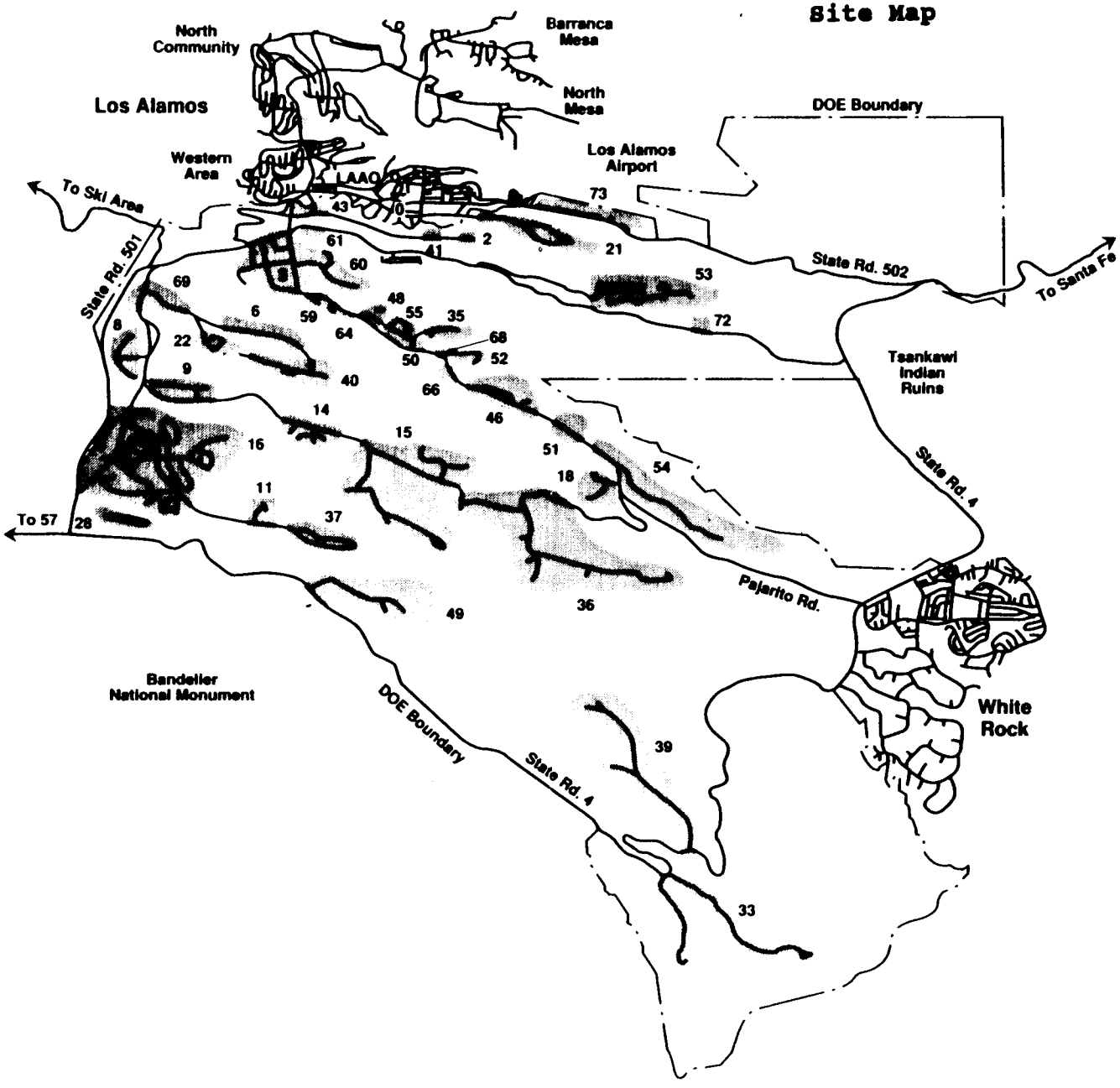

Los Alamos
NATIONAL LABORATORY

Technical Area Locations

TA-0	Unassigned Land Reserve
TA-2	Omega Site
TA-3	South Mesa Site
TA-6	Two Mile Mesa Site
TA-8	Anchor Site West
TA-9	Anchor Site East
TA-11	K-Site
TA-14	Q-Site
TA-15	R-Site
TA-16	S-Site
TA-18	Pajarito Laboratory
TA-21	DP-Site
TA-22	TD-Site
TA-28	Magazine Area A
TA-33	HP-Site
TA-35	Ten Site
TA-36	Kappa Site
TA-37	Magazine Area C
TA-39	Ancho Canyon Site
TA-40	DF-Site
TA-41	W-Site
TA-43	Health Research Lab & DOE Headquarters
TA-46	WA-Site
TA-48	Radiochemistry Site
TA-49	Frijoles Mesa Site
TA-50	Waste Management Site
TA-51	Radiation Exposure Facility
TA-52	Reactor Development Site
TA-53	Meson Physics Facility
TA-54	Waste Disposal Site
TA-55	Plutonium Facility Site
TA-57	Fenton Hill Site
TA-59	OH Site
TA-73	Airport

TA-60,61,64,66,68,72
(unnamed TAs)

Revision 2
7/14/93

FIGURE 2

RD&D Unit Key Map

(Please place the oversize drawing provided with the previous application revision dated 6/24/93 behind this cover sheet)

FIGURE 3

Location Map

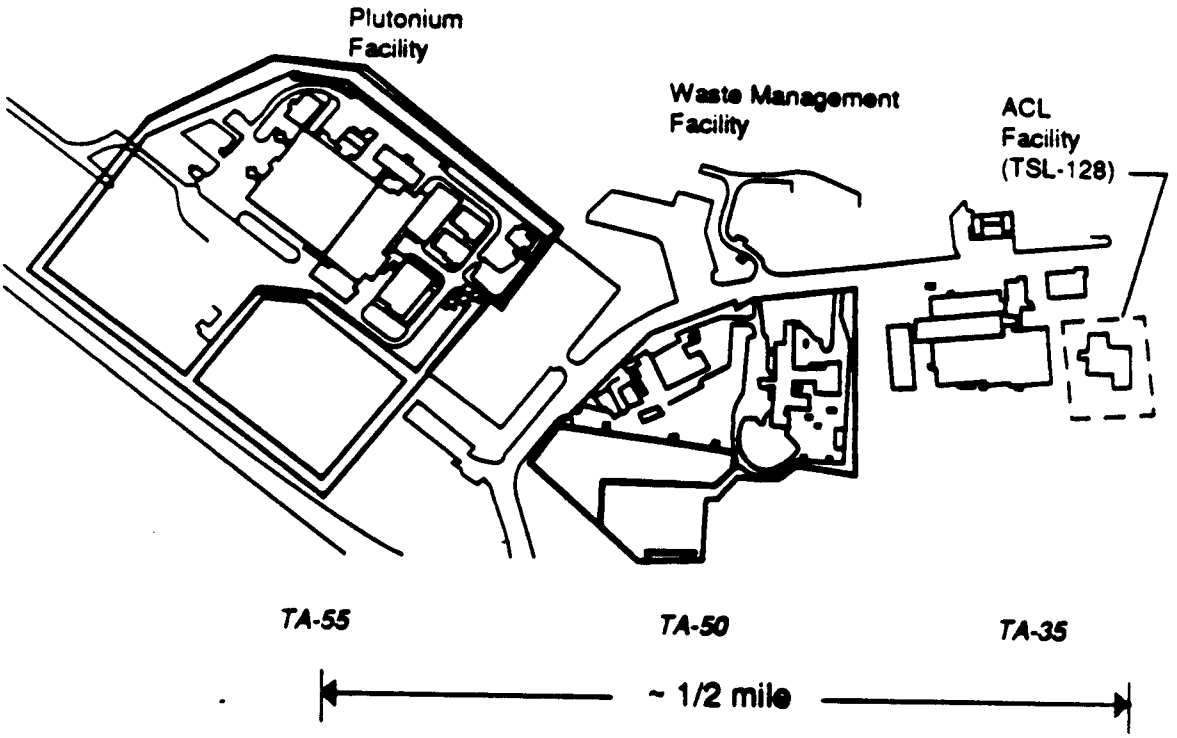

FIGURE 4

Layout of Building 128

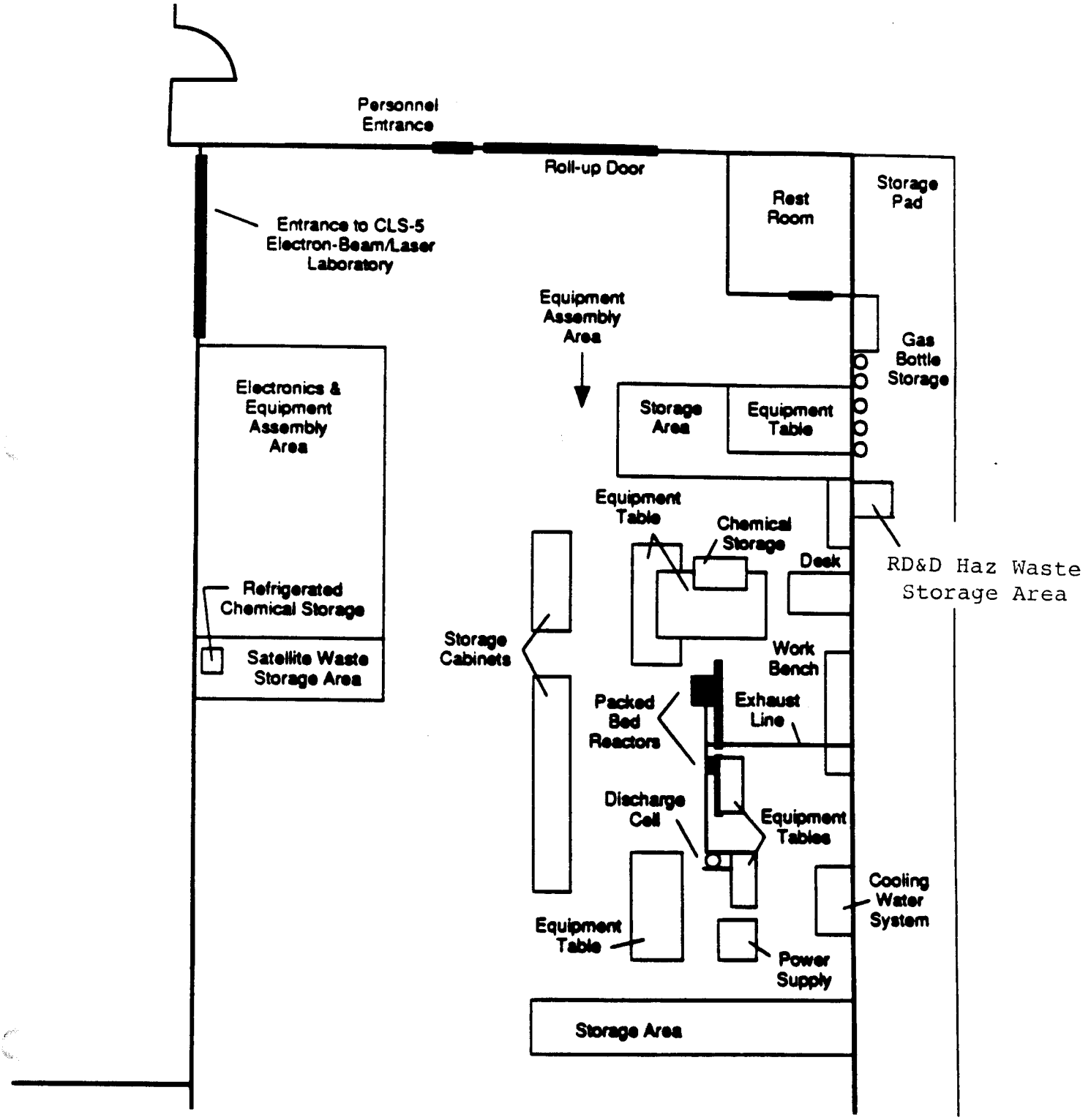

Revision 2
7/14/93

FIGURE 5

Topographic Map

(Please place the oversize drawing provided with the previous application revision dated 6/24/93 behind this cover sheet)

FIGURE 6

Revision 2
7/14/93

LOCATION OF RD&D UNITS RELATIVE TO NEARBY FAULT TRACES

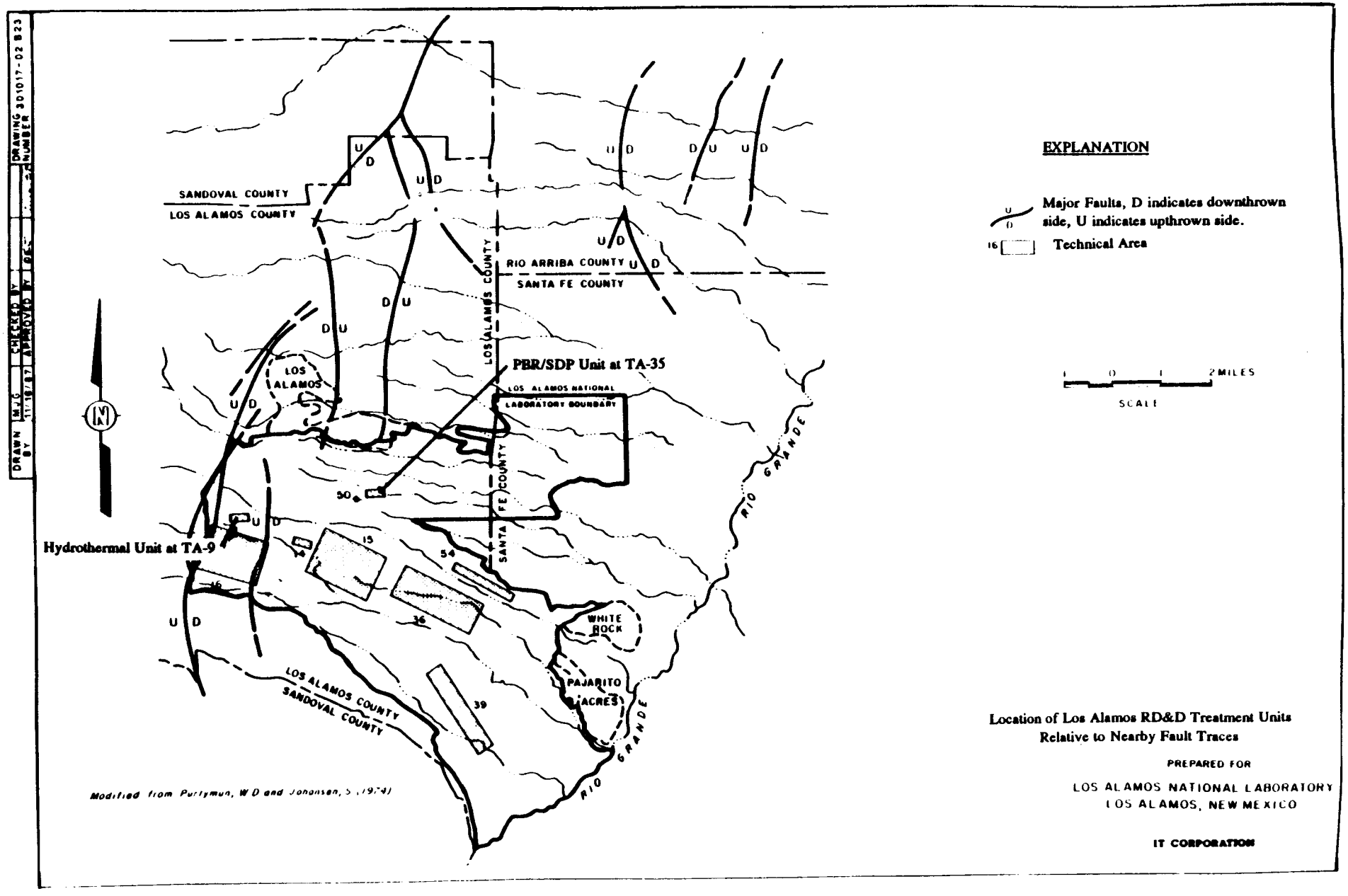

Source: Los Alamos National Lab, Part B Permit Application, 1988

FIGURE 7

Packed-Bed Reactor

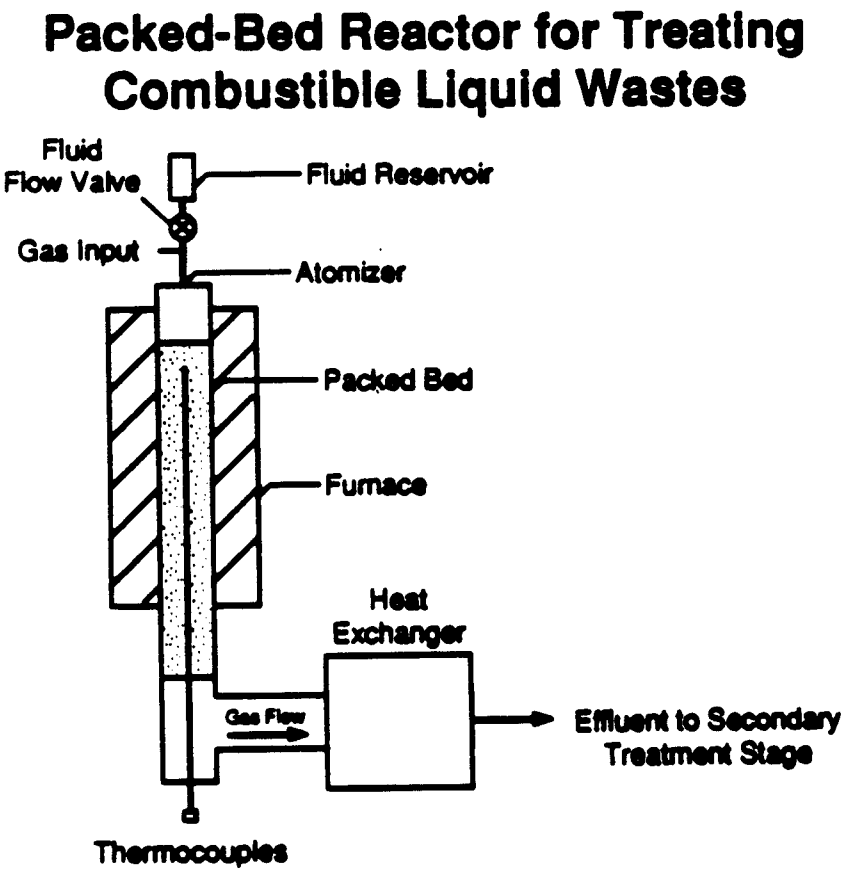

FIGURE 8

Cross-Section of Silent Discharge Plasma Unit

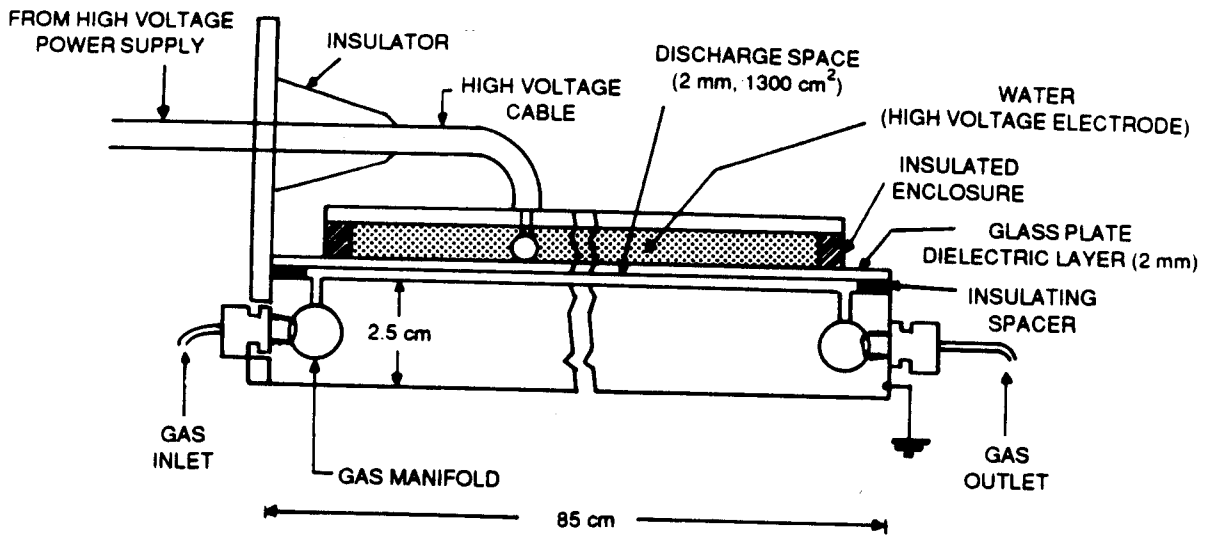

FIGURE 9

Revision 2
7/14/93

Packed-Bed Reactor/Silent Discharge Plasma RD&D Unit: Open-Loop Configuration

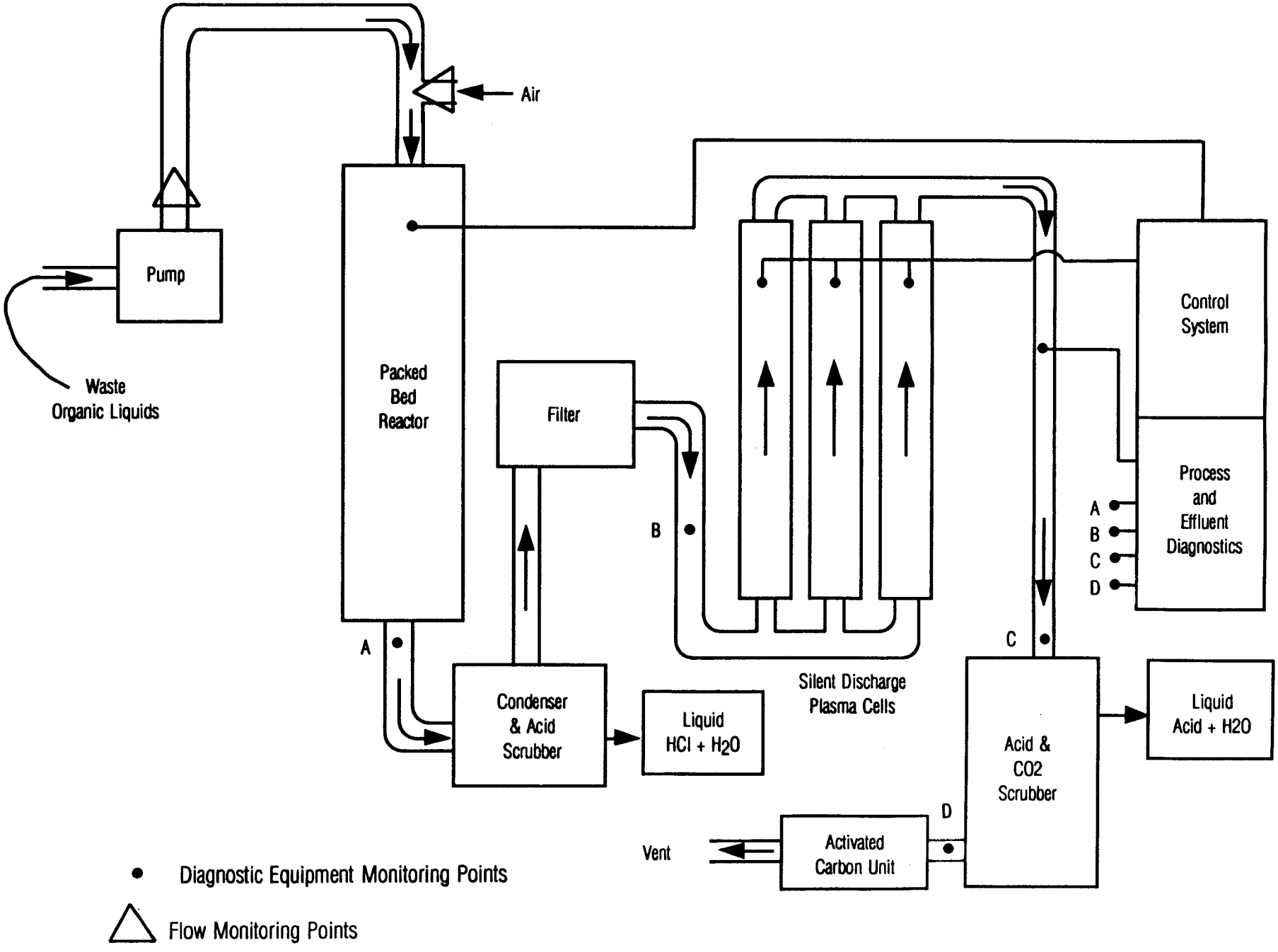

FIGURE 10

Packed-Bed Reactor/Silent Discharge Plasma RD&D Unit: Closed-Loop Configuration

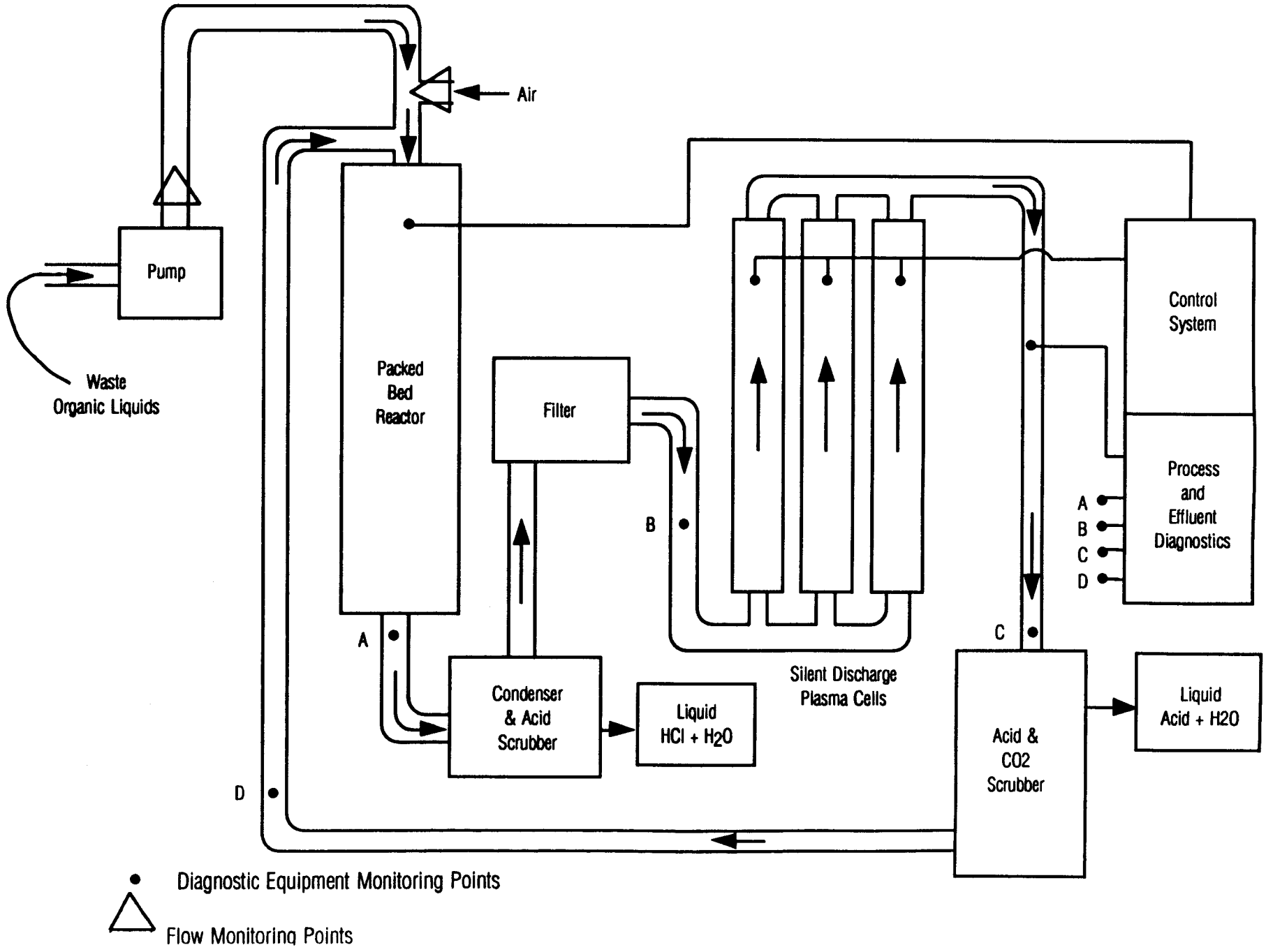

Waste Profile Information

RD&D Permit

The following wastes may be treated in the PBR/SDP treatment unit. Waste profile information for these wastes is provided on the following sheets. Sample ID numbers associated with the wastes on the profile data sheets are listed below.

Waste Description	Hazardous Waste Code(s)	Sample ID No.
Oil with 1,1,1-Trichloroethane from cleaning and repairing of vacuum pumps.	F001	9213
Lacquer thinner from cleaning road painting equipment.	D001	9217
Mixture of acetone/ethanol from degreasing oily parts.	F003	9218

Solvent Screen

Laboratory Sample ID		L04026-2	L04026-5	L04026-6	L04026-7	L04026-8	L04026-10
Date Received		10/1/92	10/1/92	10/1/92	10/1/92	10/1/92	10/1/92
Date Collected		9/29/92	9/29/92	9/29/92	9/29/92	9/29/92	9/29/92
Your Sample ID		9208	9211	9212	9213	9214	9216
Parameter	Units	Results	Results	Results	Results	Results	Results
Trichlorofluoromethane	% Wt	<0.10	<0.10	<0.10	<0.10	<0.01	<0.01
Methanol	% Wt	<0.30	<0.30	<0.30	<0.30	<0.03	<0.03
Ether	% Wt	<0.10	<0.10	<0.10	<0.10	<0.01	<0.01
1,1,2-Trichloro-1,2,2-trifluoroethane	% Wt	<0.10	<0.10	84.4	<0.10	<0.01	<0.01
Ethanol	% Wt	<0.10	<0.10	<0.10	<0.10	<0.01	<0.01
Acetone	% Wt	<0.10	<0.10	<0.10	<0.10	<0.01	<0.01
Isopropanol	% Wt	<0.10	<0.10	12.	<0.10	<0.01	<0.01
Methylene Chloride	% Wt	<0.10	<0.10	<0.10	<0.10	<0.01	<0.01
Ethyl Acetate	% Wt	<0.10	<0.10	<0.10	<0.10	<0.01	<0.01
1,1,1-Trichloroethane	% Wt	<0.10	<0.10	<0.10	[0-1.5]	<0.01	<0.01
Methyl Ethyl Ketone	% Wt	<0.10	<0.10	<0.10	<0.10	<0.01	<0.01
Carbon Tetrachloride	% Wt	<0.10	<0.10	<0.10	[0-6.1]	<0.01	<0.01
Chloroform	% Wt	<0.10	<0.10	<0.10	<0.10	<0.01	<0.01
Benzene	% Wt	<0.10	<0.10	<0.10	<0.10	<0.01	<0.01
Isobutanol	% Wt	<0.10	<0.10	<0.10	<0.10	<0.01	<0.01
Trichloroethylene	% Wt	<0.10	<0.10	<0.10	<0.10	<0.01	<0.01
N-Butanol	% Wt	<0.10	<0.10	<0.10	<0.10	<0.01	<0.01
Toluene	% Wt	<0.10	<0.10	<0.10	<0.10	<0.01	<0.01
2-Ethoxyethanol	% Wt	<0.10	<0.10	<0.10	<0.10	<0.01	<0.01
Methyl Isobytyl Ketone	% Wt	<0.10	<0.10	<0.10	<0.10	<0.01	<0.01
Tetrachloroethylene	% Wt	<0.10	<0.10	<0.10	<0.10	<0.01	<0.01
Butyl Acetate	% Wt	<0.10	<0.10	<0.10	<0.10	<0.01	<0.01
Chlorobenzene	% Wt	<0.10	<0.10	<0.10	<0.10	<0.01	<0.01
Ethylbenzene	% Wt	<0.10	<0.10	<0.10	<0.10	<0.01	<0.01
Xylenes	% Wt	<0.10	<0.10	<0.10	<0.10	<0.01	<0.01
Styrene	% Wt	<0.10	<0.10	<0.10	<0.10	<0.01	<0.01
2-Ethoxyethanol Acetate	% Wt	<0.10	<0.10	<0.10	<0.10	<0.01	<0.01
Cyclohexanone	% Wt	<0.10	<0.10	<0.10	<0.10	<0.01	<0.01
2-Butoxyethanol	% Wt	<0.10	<0.10	<0.10	<0.10	<0.01	<0.01
Dichlorobenzene	% Wt	<0.10	<0.10	<0.10	<0.10	<0.01	<0.01
Hydrocarbons (as HC)*	% Wt	3.9	.43	.74	1.3	<0.01	<0.01
High Boiling Point Organics*	% Wt	43.5	.72	.88	0.8	<0.01	<0.01
Hexane	% Wt	<0.10	<0.10	<0.10	<0.10	<0.01	<0.01
Heptane	% Wt	<0.10	<0.10	<0.10	<0.10	<0.01	<0.01

Copyright © 1991 Chemical Waste Management, Inc.

Solvent Screen

Laboratory Sample ID		L04026-2	L04026-5	L04026-6	L04026-7	L04026-8	L04026-10
Date Received		10/1/92	10/1/92	10/1/92	10/1/92	10/1/92	10/1/92
Date Collected		9/29/92	9/29/92	9/29/92	9/29/92	9/29/92	9/29/92
Your Sample ID		9208	9211	9212	9213	9214	9216
Parameter	Units	Results	Results	Results	Results	Results	Results
Trichlorofluoroethane	% Wt	<0.10	<0.10	<0.10	<0.10	<0.01	<0.01
Tetrahydrofuran	% Wt	<0.10	<0.10	<0.10	<0.10	<0.01	<0.01
Isobutyl Acetate	% Wt	<0.10	<0.10	<0.10	<0.10	<0.01	<0.01
n-Propyl Acetate	% Wt	<0.10	<0.10	<0.10	<0.10	<0.01	<0.01
n-Propanol	% Wt	<0.10	<0.10	<0.10	<0.10	<0.01	<0.01
Cellosolve	% Wt	<0.10	<0.10	<0.10	<0.10	<0.01	<0.01
Cellosolve Acetate	% Wt	<0.10	<0.10	<0.10	<0.10	<0.01	<0.01
Butyl Cellosolve	% Wt	<0.10	<0.10	<0.10	<0.10	<0.01	<0.01
Butyl Cellosolve Acetate	% Wt	<0.10	<0.10	<0.10	<0.10	<0.01	<0.01

* Estimated Concentration

Copyright © 1991 Chemical Waste Management, Inc.

Solvent Screen

Laboratory Sample ID		L04026-11	L04026-12	L04026-13			
Date Received		10/1/92	10/1/92	10/1/92			
Date Collected		9/29/92	9/29/92	9/29/92			
Your Sample ID		9217	9218	9219			
Parameter	Units	Results	Results	Results	Results	Results	Results
Trichlorofluoromethane	% Wt	<0.10	<0.10	<0.01			
Methanol	% Wt	<0.30	<0.30	<0.03			
Ether	% Wt	<0.10	<0.10	<0.01			
1,1,2-Trichloro-1,2,2-trifluoroethane	% Wt	<0.10	<0.10	<0.01			
Ethanol	% Wt	<0.10	33.5	<0.01			
Acetone	% Wt	<0.10	19.0	<0.01			
Isopropanol	% Wt	<0.10	.88	<0.01			
Methylene Chloride	% Wt	<0.10	<0.10	<0.01			
Ethyl Acetate	% Wt	<0.10	<0.10	<0.01			
1,1,1-Trichloroethane	% Wt	<0.10	[0-4]	<0.01			
Methyl Ethyl Ketone	% Wt	20.7	<0.10	<0.01			
Carbon Tetrachloride	% Wt	<0.10	[0-15]	<0.01			
Chloroform	% Wt	<0.10	<0.10	<0.01			
Benzene	% Wt	<0.10	<0.10	<0.01			
Isobutanol	% Wt	<0.10	<0.10	<0.01			
Trichloroethylene	% Wt	<0.10	<0.10	<0.01			
N-Butanol	% Wt	<0.10	<0.10	<0.01			
Toluene	% Wt	43.7	<0.10	<0.01			
2-Ethoxyethanol	% Wt	<0.10	<0.10	<0.01			
Methyl Isobytyl Ketone	% Wt	<0.10	<0.10	<0.01			
Tetrachloroethylene	% Wt	0.39	<0.10	<0.01			
Butyl Acetate	% Wt	0.12	<0.10	<0.01			
Chlorobenzene	% Wt	<0.10	<0.10	<0.01			
Ethylbenzene	% Wt	<0.10	<0.10	<0.01			
Xylenes	% Wt	0.57	3.3	<0.01			
Styrene	% Wt	<0.10	<0.10	<0.01			
2-Ethoxyethanol Acetate	% Wt	<0.10	<0.10	<0.01			
Cyclohexanone	% Wt	<0.10	<0.10	<0.01			
2-Butoxyethanol	% Wt	2.3	<0.10	<0.01			
Dichlorobenzene	% Wt	<0.10	<0.10	<0.01			
Hydrocarbons (as HC)*	% Wt	14.4	.94	<0.01			
High Boiling Point Organics*	% Wt	0.69	.25	<0.01			
Hexane	% Wt	<0.10	<0.10	<0.01			
Heptane	% Wt	<0.10	<0.10	<0.01			

Copyright © 1991 Chemical Waste Management, Inc.

Certificate Of Analysis

Solvent Screen

Laboratory Sample ID		L04026-11	L04026-12	L04026-13			
Date Received		10/1/92	10/1/92	10/1/92			
Date Collected		9/29/92	9/29/92	9/29/92			
Your Sample ID		9217	9218	9219			
Parameter	Units	Results	Results	Results	Results	Results	Results
Trichlorofluoroethane	% Wt	<0.10	<0.10	<0.01			
Tetrahydrofuran	% Wt	<0.10	<0.10	<0.01			
Isobutyl Acetate	% Wt	<0.10	<0.10	<0.01			
n-Propyl Acetate	% Wt	<0.10	<0.10	<0.01			
n-Propanol	% Wt	<0.10	<0.10	<0.01			
Cellosolve	% Wt	<0.10	<0.10	<0.01			
Cellosolve Acetate	% Wt	<0.10	<0.10	<0.01			
Butyl Cellosolve	% Wt	<0.10	<0.10	<0.01			
Butyl Cellosolve Acetate	% Wt	<0.10	<0.10	<0.01			

*Estimated Concentration

Copyright © 1991 Chemical Waste Management, Inc.

Fingerprint Analysis Report

Laboratory Sample ID			L04026-1	L04026-1	L04026-2	L04026-3	L04026-4
Date Received			10/1/92	10/1/92	10/1/92	10/1/92	10/1/92
Date Collected			9/29/92	9/29/92	9/29/92	9/29/92	9/29/92
Your Sample ID			9207 Layer 1	9207 Layer 2	9208	9209	9210
Parameter	Method	Units	Results	Results	Results	Results	Results
Color	D4979-89	NA	Gold Brown		Brown	Faint Green	Brown
Incidental Odor	D4979-89	NA	None		None	None	None
Physical State	D4979-89	NA	Liquid & Solid		Liquid & Solid	Liquid	Liquid
Layers	D4979-89	NA	Multilayered		Multilayered	Single	Single
Free Liquids	D4979-89	NA	40%		99%	100%	100%
Viscosity	D4979-89	NA	Low	N/A	Medium	Low	Low
Visual Oil & Grease	D4979-89	NA	Negative	Negative	Positive	Negative	Negative
pH	D4980	units	5.79		5.80	13.0	11.0
Cyanide Screen	D5049	NA	Negative		Negative	Negative	Negative
Sulfide Screen	D4978	NA	Negative		Negative	Negative	Negative
Flammability Potential	D4982	NA	Positive		Negative	Negative	Negative
Oxidizer Screen	D4981	NA	Negative		Negative	Negative	Negative
Radiation Screen	CWM 87-36	NA	At Background	At Background	At Background	At Background	At Background
Paint Filter	9095	NA	Fail	Pass	Fail	Fail	Fail
Water Mix Test Results	D5058-90						
Reactivity		NA	Negative	Negative	Negative	Negative	Negative
Temperature Rise		°F	0	0	0	-1	0
Water Solubility		NA	Soluble	Partially	Insoluble	Soluble	Soluble
Heavier and/or Lighter Than Water		NA	N/A	Heavier	Lighter	N/A	N/A
Emulsifies		NA	No	No	No	No	No
Precipitates		NA	No	No	No	No	No

Copyright © 1991 Chemical Waste Management, Inc.

Fingerprint Analysis Report

Laboratory Sample ID			L04026-5	L04026-6	L04026-6	L04026-7	L04026-7
Date Received			10/1/92	10/1/92	10/1/92	10/1/92	10/1/92
Date Collected			9/29/92	9/29/92	9/29/92	9/29/92	9/29/92
Your Sample ID			9211 Layer 1	9211 Layer 2	9212	9213 Layer 1	9213 Layer 2
Parameter	Method	Units	Results	Results	Results	Results	Results
Color	D4979-89	NA	Tan Brown		Colorless	Tan Brown	
Incidental Odor	D4979-89	NA	None		None	None	
Physical State	D4979-89	NA	Liquid & Solid		Liquid	Liquid & Solid	
Layers	D4979-89	NA	Multilayered		Single	Multilayered	
Free Liquids	D4979-89	NA	99%		100%	99%	
Viscosity	D4979-89	NA	Medium	Low	Low	Medium	Medium
Visual Oil & Grease	D4979-89	NA	Negative	Positive	Negative	Positive	Positive
pH	D4980	units	10.94		8.31	9.63	
Cyanide Screen	D5049	NA	Negative		Negative	Negative	
Sulfide Screen	D4978	NA	Negative		Negative	Negative	
Flammability Potential	D4982	NA	Positive		Positive	Positive	
Oxidizer Screen	D4981	NA	Negative		Negative	Negative	
Radiation Screen	CWM 87-38	NA	At Background	At Background	At Background	At Background	At Background
Paint Filter	9095	NA	Fail	Fail	Fail	Fail	Fail
Water Mix Test Results	D5058-90						
Reactivity		NA	Negative	Negative	Negative	Negative	Negative
Temperature Rise		°F	+1	0	0	0	0
Water Solubility		NA	Partially	Partially	Soluble	Insoluble	Partially
Heavier and/or Lighter Than Water		NA	Lighter	Lighter	N/A	Lighter	Both
Emulsifies		NA	No	No	No	No	No
Precipitates		NA	No	No	No	No	No

Copyright © 1991 Chemical Waste Management, Inc.

Fingerprint Analysis Report

		Laboratory Sample ID	L04026-7	L04026-8	L04026-9	L04026-10	L04026-10
		Date Received	10/1/92	10/1/92	10/1/92	10/1/92	10/1/92
		Date Collected	9/29/92	9/29/92	9/29/92	9/29/92	9/29/92
		Your Sample ID	9213 Layer 3	9214	9215	9216 Layer 1	9216 Layer 2
Parameter	Method	Units	Results	Results	Results	Results	Results
Color	D4979-89	NA		Blue	Yellow	Green/Tan/ Colorless	
Incidental Odor	D4979-89	NA		None	None	None	
Physical State	D4979-89	NA		Liquid	Liquid	Liquid & Solid	
Layers	D4979-89	NA		Single	Single	Multilayered	
Free Liquids	D4979-89	NA		100%	100%	40%	
Viscosity	D4979-89	NA	Low	Low	Low	Low	N/A
Visual Oil & Grease	D4979-89	NA	Positive	Negative	Negative	Negative	Negative
pH	D4980	units		8.76	2.41	1.75	
Cyanide Screen	D5049	NA		Negative	Negative	Negative	
Sulfide Screen	D4978	NA		Negative	Negative	Negative	
Flammability Potential	D4982	NA		Negative	Negative	Negative	
Oxidizer Screen	D4981	NA		Negative	Negative	Negative	
Radiation Screen	CWM 87-36	NA	At Background	At Background	At Background	At Background	At Background
Paint Filter	9095	NA	Fail	Fail	Fail	Fail	Pass
Water Mix Test Results	D5058-90						
Reactivity		NA	Negative	Negative	Negative	Negative	Negative
Temperature Rise		°F	0	0	-1	0	0
Water Solubility		NA	Partially	Partially	Soluble	Soluble	Insoluble
Heavier and/or Lighter Than Water		NA	Lgter	Lighter	N/A	N/A	Heavier
Emulsifies		NA	No	No	No	No	No
Precipitates		NA	No	No	No	No	No

Copyright © 1991 Chemical Waste Management, Inc.

Fingerprint Analysis Report

		Laboratory Sample ID	L04026-11	L04026-12	L04026-13	L04026-14	L04026-14
		Date Received	10/1/92	10/1/92	10/1/92	10/1/92	10/1/92
		Date Collected	9/29/92	9/29/92	9/29/92	9/29/92	9/29/92
		Your Sample ID	9217	9218	9219	9220 Layer 1	9220 Layer 2
Parameter	Method	Units	Results	Results	Results	Results	Results
Color	D4979-89	NA	Yellow	Orange	Brown/Grey	Purple Blue	
Incidental Odor	D4979-89	NA	None	None	None	None	
Physical State	D4979-89	NA	Liquid & Solid	Liquid & Solid	Liquid & Solid	Liquid & Solid	
Layers	D4979-89	NA	Multilayered	Multilayered	Multilayered	Multilayered	
Free Liquids	D4979-89	NA	99%	99.5	98%	95%	
Viscosity	D4979-89	NA	Low	Low	Low	Low	Low
Visual Oil & Grease	D4979-89	NA	Negative	Positive	Positive	Negative	Negative
pH	D4980	units	5.23	5.46	6.81	9.03	
Cyanide Screen	D5049	NA	Negative	Negative	Negative	Negative	
Sulfide Screen	D4978	NA	Negative	Negative	Negative	Negative	
Flammability Potential	D4982	NA	Positive	Positive	Negative	Negative	
Oxidizer Screen	D4981	NA	Negative	Negative	Negative	Negative	
Radiation Screen	CWM 87-36	NA	At Background	At Background	At Background	At Background	At Background
Paint Filter	9095	NA	Fail	Fail	Fail	Fail	Fail
Water Mix Test Results	D5058-90						
Reactivity		NA	Negative	Positive	Negative	Negative	Negative
Temperature Rise		°F	+1	+5	0	0	0
Water Solubility		NA	Insoluble	Partially	Partially	Soluble	Partially
Heavier and/or Lighter Than Water		NA	Lighter	Lighter	Both	N/A	Heavier
Emulsifies		NA	No	No	No	No	No
Precipitates		NA	No	No	No	No	No

Copyright © 1991 Chemical Waste Management, Inc.

Revision 2
7/14/93

ATTACHMENT 2

WASTE ANALYSIS PLAN
AND
QUALITY ASSURANCE PROJECT PLAN (QAPjP)

Los Alamos National Laboratory

RD&D PERMIT

TABLE OF CONTENTS

Attachment Page

1.0 GENERAL LANL WASTE ANALYSIS PROCEDURES 1
1.1 Waste Analysis and Handling Procedures for Storage 1
1.2 Waste Segregation 1

2.0 GENERAL LANL WASTE ANALYSIS AND HANDLING PROCEDURES FOR TREATMENT AND DISPOSAL 2
2.1 Organic Waste 3
2.1.1 Uncomposited Labpack Waste 3
2.1.2 Drummed Waste 3
2.1.3 Composited Labpack Waste 4
2.1.4 Composited Drummed Waste 4
2.2 Corrosive Acid Waste 5
2.2.1 Labpack Waste 5
2.2.2 Process Waste 5
2.3 Corrosive Basic Waste 6
2.3.1 Labpack Waste 6
2.3.2 Process Waste 6
2.4 Oxidizer Waste 7
2.5 Reactive Wastes 7
2.5.1 Uncomposited Labpack Waste 8
2.5.2 Process Waste 8
2.6 Inorganic Wastes 8
2.6.1 Uncomposited Labpack Waste 8
2.6.2 Process Waste 8
2.7 Explosives Waste 9
2.8 Contaminated Solid Waste 9
2.9 Waste Treatment Residuals 10
2.10 Unknown Material 10

TABLES

Table A-1 Wastestreams, Analytical Parameters, and Rationale
Table A-2 Packaging Segregation Scheme
Table A-3 Waste Analysis Parameters and Test Methods

APPENDIX A
Quality Assurance Project Plan (QAPjP)

1.0 INTRODUCTION 1-1

2.0 PROJECT DESCRIPTION 2-1
2.1 Objective and Scope Statement 2-1

2.2 Data Usage 2-1
2.3 Schedule of Task and Products 2-1

3.0 PROJECT ORGANIZATION AND RESPONSIBILITY 3-1

4.0 QUALITY ASSURANCE OBJECTIVES 4-1
4.1 Measurement Objectives 4-1
4.2 Method Detection Limits 4-1
4.3 Data Quality Objectives 4-1
4.3.1 Precision and Accuracy 4-1
4.3.2 Data Representativeness 4-3
4.3.3 Data Comparability 4-3
4.3.4 Data Completeness 4-4

5.0 SAMPLING PROCEDURES 5-1
5.1 Introduction 5-1
5.2 Number of Samples 5-1
5.3 Sampling Methods 5-2

6.0 SAMPLE CUSTODY 6-1
6.2 Sample Tags 6-3
6.3 Research Logbooks 6-3

7.0 CALIBRATION PROCEDURES FREQUENCY AND PREVENTIVE MAINTENANCE 7-1

8.0 ANALYTICAL PROCEDURES 7-1

9.0 DATA REDUCTION, VALIDATION AND REPORTING 9-1
9.1 Documentation 9-1
9.2 Data Reduction and Reporting 9-1
9.3 Data Validation 9-1

10.0 INTERNAL QUALITY CONTROL CHECKS 10-1

11.0 PERFORMANCE AND SYSTEMS AUDIT 10-1
11.1 Introduction 10-1
11.2 Performance Audits 10-1
11.3 System Audits 10-1

12.0 ROUTINE PROCEDURES USED IN DATA ASSESSMENT . . . 12-1

13.0 CORRECTIVE ACTION 13-1

14.0 REPORTS 13-1

WASTE ANALYSIS PLAN
AND
QUALITY ASSURANCE PROJECT PLAN (QAPjP)

1.0 WASTE ANALYSIS

This document specifies the general procedures for the identification and handling of hazardous wastes for storage at LANL. While only a limited number of known wastes will be managed in the RD&D treatment unit, this waste analysis plan describes the procedures for managing all wastes lab wide.

Unit-specific waste analysis procedures to characterize the effluent from the PBR/SDP treatment process are detailed in the Sampling and Analysis Plan (SAP) which is provided as Section 5 of the Quality Assurance Project Plan (QAPjP). The QAPjP is included in this attachement as Appendix A.

1.1 Waste Analysis and Handling Procedures for Storage

When chemical substances are declared to be in excess, the originating group completes a Chemical Waste Disposal Request and sends the form to the Waste Management Group (EM-7). The request lists the chemical waste the generating group needs to dispose of, the quantity and physical form of the wastes, and other pertinent information such as the condition of the containers. Material Safety Data Sheets (MSDSs) and existing analysis data may also be available and attached.

Using Part B of the Chemical Waste Disposal Request Form, EM-7 staff can assign a Reactivity Group Number (RGN) to each container or bottle. The EPA document, "A Method for Determining the Compatibility of Hazardous Waste," (EPA-600/2-80-076) serves as the basis for LANL procedure to assign RGN numbers. Additional information assigned during this review includes EPA codes and transportation information. The completed request form, container label, and MSDS/analytical data serve as the waste analysis record for the waste to be stored per the following segregation schemes.

1.2 Waste Segregation

To prevent adverse interactions of incompatible chemical wastes and to facilitate recycling or treatment of wastes, chemical wastes will be segregated into the following general categories:

- Organics, including solvent wastes such as acetone, benzene, and toluene.
- Corrosive acidic wastes, including organic and mineral acids.
- Corrosive caustic wastes.
- Oxidizers, such as perchloric or chromic acid, and nonacidic oxidizers, such as permanganates and chlorates.
- Reactive metals and compounds, such as sodium, lithium hydride, and phosphorous trichloride.
- Nonreactive metals, salts, and neutral compounds, such as lead and barium salts, and cyanide or sulfide compounds (in <5 gal. quantities only).

Utilizing the RGN assigned to the container and Table A-2, an area for storage of the waste is assigned. The organics and oxidizers have subcategories of segregation that will be followed by packaging/compositing of wastes to ensure that potential incompatibles are not combined together.

2.0 WASTE ANALYSIS AND HANDLING PROCEDURES FOR TREATMENT AND DISPOSAL

The analysis and handling procedures for waste requiring treatment and/or disposal follows. The decision process is summarized in Table A-1.

Several terms used throughout this section require further explanation.

- LDR is land disposal restricted. When used in this section it refers to all waste currently regulated under 40 CFR 268.
- TCLP metals means those eight metals regulated under the Toxicity Characteristic Leaching Procedure.
- KOP refers to knowledge of process. In the case of original containers of materials, the information from the Chemical Disposal Request Form, as described earlier, is the KOP documentation. All other waste is documented by previous analyses or information provided by the generator.

- Labpack waste refers to original containers of hazardous materials no greater than 5 gallons in size.

- Coliwasa sampler also includes the use of coliwasa type sampling apparatus. Other equivlanent EPA SW-846 sampling methods, such as use of tubing or dipper, may be substituted for the coliwasa sampler.

2.1 Organic Waste

Organic waste is split into four processing categories: uncomposited labpack waste, drummed material, composited labpack waste, and composited drummed waste. The following discussions treat each as a unique analysis entity.

2.1.1 Uncomposited Labpack Waste

These wastes are those, that due to their toxicity or their physical (solid) state, will not be composited but will be packaged in overpack containers with absorbent. The entire container is then incinerated. LANL's incinerator cannot generally receive such a package, therefore, most of this waste is and will be shipped offsite. The packing list of bottles and cans in the overpack container serves as the analytical record. This listing is sufficient to allow the identification of any and all LDR waste.

2.1.2 Drummed Waste

There are very few ongoing operations at LANL that generate an organic process waste. As a result, each drum of this waste is virtually a unique entity. The exception would be those cases where we know more than one drum of waste came from the same place, e.g., 400 gallons of oil drained from the same machine reservoir. The drums are also sampled using a coliwasa or equivalent sampler if liquid or a core sampler if solid. Since this waste is destined for incineration, the following parameters are tested for: pH, ash content, viscosity, heat value, TCLP metals, total organic halogen, total organic chlorine, sulfur, and chemical composition. This latter will identify approximately ninety-five percent of the substances that are present in the waste. Availability of documented KOP will determine if the organic trace analyses need to be performed. Documentation or analyses will identify the presence/absence of organic LDR compounds, trichlorofluoromethane, bromoform, dichlorodifluoromethane and ethylene dibromide. These latter four compounds are only necessary if the waste is to be incinerated onsite. The test methods are listed in Table A-3.

Throughout the year, container of organic waste mixtures, smaller than a 55-gallon drum, are generated in the many laboratories at LANL. The generator maintains a list of the substances placed in these containers. This allows EM-7 personnel to confirm compatibility of these wastes before they are composited into 55-gallon or larger containers. When the composite receptacle is full, the waste is analyzed as described above for any large container of organic waste.

Solid organic waste is sampled using a core sampler or a grab sampler if the material can not be penetrated by a core sampler. Analytical parameters, frequencies, and test methods would be the same as those outlined above for any large container of waste. Debris that is organically contaminated is analyzed per Section 2.8.

2.1.3 Composited Labpack Waste

Composited labpack wastes are those bottles and cans of liquid waste that have been combined for the purpose of incineration. Compatibility is ensured by following the procedures in Section 1.1 and 1.2. Since all the chemicals in a composite drum are known entities, the list of chemicals and their quantity serves as the primary analysis record. This listing is sufficient to allow the identification of any and all LDR waste. When the drum is full, it is sampled with a coliwasa or equivalent sampler. Since chemical composition is known, only the physical parameters need to be calculated or analyzed for. If any physical characteristics can not be calculated due to the variety of substances placed in the drum, the sample is analyzed for that parameter. Therefore, analysis or calculation would provide pH, flashpoint, ash content, viscosity, heat value, total organic halogens, and total organic chlorine. The methods used for these analyses are specified in Table A-3. This will be done for each container of composited waste since each container is unique.

2.1.4 Composited Drummed Waste

Composited drummed waste are those drums of waste for which the analytical data described in Section 2.1.3 already exists and are combined in either the TA-54, Area L storage tanks or the liquid feed tanks at the incinerator for the purposes of offsite shipment or onsite incineration. Compatibility is ensured by following the procedures in Sections 1.1 and 1.2. Chemical and physical parameters can be calculated from the existing data. If at any time calculations of physical parameters, such as heat value, is inadequate, those identified analyses will be redone. The calculations will be performed on each unique tank of waste.

2.2 Corrosive Acid Waste

Corrosive acid waste is handled in two primary processing categories: labpack and process waste. The following discussions treat each as a unique analysis entity.

2.2.1 Labpack Waste

This wastestream consists of original containers of acid waste. The labels on the containers continue to serve as the primary analytical record. Those acids that can be reused by another component of LANL are redistributed for use as a raw material. Those that can not be reused are treated by elementary neutralization. This occurs primarily at the TA-50 Liquid Waste Treatment Plant but could occur throughout LANL in individual laboratories.

2.2.2 Process Waste

There are three categories of process waste: nonroutine nonmetallic waste, nonroutine metallic waste, and routine waste. Each is discussed separately. Documented KOP will negate the concern for the presence of LDR organic compounds. Therefore, references to LDR in this section refers only to inorganic constituents.

Nonroutine nonmetallic waste is periodically generated throughout LANL. This waste will be analyzed for pH, the TCLP metals, nickel and thallium. This allows confirmation of the presence/absence of LDR material. The test methods employed are listed in Table A-3. Sampling is performed using a coliwasa or equivalent sampler. Because this is defined as a nonroutine wastestream, every unique drum or batch will be sampled.

Nonroutine metallic waste is generated primarily by LANL's electroplating operations. At the time of generation, these wastes are identified by the generator as containing heavy metals. The generator may also provide the approximate metal concentration, if the information is available. This waste will be analyzed for pH, TCLP metals, nickel and thallium. This allows confirmation of the presence of LDR material and establishes the parameters that are analyzed for at the completion of treatment. The test methods employed are listed in Table A-3. Sampling is performed using a coliwasa or equivalent sampler. Because this is identified as a nonroutine wastestream, every unique drum or batch will be sampled.

There are five routinely generated acidic wastestreams at Los Alamos: nonmetallic nitric acid, nonmetallic sulfuric acid, nonmetallic acid stream, metallic ferric chloride, and metallic ammonium persulfate. Each of these streams has a confirmed basis

for RCRA regulation which establishes the parameters of concern for treatment. All three of the nonmetallic acid streams are routinely analyzed for pH. The metallic ferric chloride is analyzed for pH, chromium, silver, lead, and copper. The metallic ammonium persulfate is analyzed for pH, lead, and mercury. Annually, all of these streams are all reevaluated for pH, TCLP metals, nickel, and thallium. This allows confirmation that the waste has not changed in composition and what LDR components are present. Sampling is conducted with a coliwasa or equivalent sampler. All test methods are listed in Table A-3.

If a nonroutine wastestream becomes a routine waste or a new wastestream is identified, it will follow the pattern established in the above paragraph. Routine testing parameters will be established and reverified on an annual basis.

2.3 Corrosive Basic Waste

Corrosive basic waste is split into two processing categories: labpack waste and process waste. The following discussions treat each as a unique analysis entity.

2.3.1 Labpack Waste

This wastestream consists of original containers of basic waste. The labels on the containers serve as the primary analytical record. Those bases that can be reused by another component of LANL are redistributed for use as a raw material. Those that can not be reused are generally treated by elementary neutralization. This occurs primarily at the TA-50 Liquid Waste Treatment Plant but could occur throughout LANL in individual laboratories.

2.3.2 Process Waste

There are three categories of process waste: nonroutine nonmetallic waste, nonroutine metallic waste, and routine waste. Each is discussed separately. Documented KOP will negate the concern for organic LDR compounds. Therefore, references to LDR in this section refers only to inorganic constituents.

Nonroutine nonmetallic waste is periodically generated throughout LANL. This waste will be analyzed for pH, the TCLP metals, nickel and thallium. This allows confirmation of the presence of LDR material. The test methods employed are listed in Table A-3. Sampling is performed using a coliwasa or equivalent sampler. Because this is defined as a nonroutine wastestream, every unique drum or batch will be sampled.

Nonroutine metallic waste is generated primarily by LANL's electroplating operations. At the time of generation, these wastes are identified by the generator as containing heavy

metals. This waste will be analyzed for pH, TCLP metals, nickel, thallium, and cyanide. This procedure allows confirmation of the presence of LDR material and establishes the parameters that are analyzed for at the completion of treatment. The test methods employed are listed in Table A-3. Sampling is performed using a coliwasa or equivalent sampler. Because this is defined as a nonroutine wastestream, every unique drum or batch will be sampled.

There are three routinely generated corrosive base process wastestreams at Los Alamos: ammonium etchant, "Replenisher" solution, and "Cuposit." The Replenisher and Cuposit are tradenames. The ammonium etchant is analyzed for pH, copper, and lead. The Replenisher is analyzed for pH and lead. The Cuposit is analyzed for pH and mercury. Annually, these wastestreams are all reevaluated for pH, TCLP metals, nickel, and thallium. This allows confirmation of the presence of LDR substances and that the waste has not changed in composition. Sampling is performed with a coliwasa or equivalent sampler. Test methods used are listed in Table A-3.

If a nonroutine wastestream becomes a routine waste or a new wastestream is identified, it will follow the pattern established in the above paragraphs. Routine testing parameters will be established and reverified on an annual basis.

2.4 Oxidizer Waste

Oxidizer waste is split into two processing categories: acid waste and uncomposited labpack waste. Acid oxidizer waste is handled per Section 2.2.

Oxidizer labpack waste is not composited due to the high fire risk of doing so. They are packaged in overpack containers with absorbent. The entire container is then incinerated. LANL's incinerator cannot generally receive such a package; therefore, most of this waste is and will be shipped offsite. The packing list of bottles and cans in the overpack container serves as the analytical record. This listing is sufficient to allow the identification of any and all LDR waste.

2.5 Reactive Wastes

Reactive waste has only two processing categories: uncomposited labpack waste and routine process waste. (Explosive waste is treated as a separate category of waste and discussed in Section 2.7). The following discussions treat each as a unique analysis entry.

2.5.1 Uncomposited Labpack Waste

Reactive labpack wastes are not composited due to the high fire and explosion risk of doing so. They are packaged in overpack containers with absorbent. The entire container is then incinerated. LANL's incinerator cannot generally receive such a package; therefore, most of this waste is and will be shipped offsite. The packing list of bottles and cans in the overpack container serves as the analytical record. This listing is sufficient to allow the identification of any and all LDR waste.

2.5.2 Process Waste

The only ongoing operation at LANL that generates a reactive process waste is the machining operations. Periodically, the machinists are required to work with lithium hydride and to a lesser degree lithium metal. This results in drums of lithium hydride dust and lithium chips, respectively. Process knowledge and the isolation of these operations when they do occur serves as the analytical record for this wastestream.

If large quantities of reactive waste should be produced elsewhere in LANL, documented process knowledge would also be used as the analytical record.

2.6 Inorganic Wastes

Inorganic waste is split into two processing categories: uncomposited labpack waste and process waste. The following discussions treat each as a unique analysis entity.

2.6.1 Uncomposited Labpack Waste

These wastes are generally solid material and therefore do not lend themselves to compositing. They will be packaged in overpack containers with absorbent. The entire container is then usually destined for offsite land disposal. The packing list of bottles and cans in the overpack container serves as the analytical record. This listing is sufficient to allow the identification of any and all LDR waste.

2.6.2 Process Waste

Four categories of inorganic process waste exist: liquid waste, primary metal waste, nonroutine solid waste, and routine solid waste. Inorganic liquid waste is generally acidic or basic and is thus treated under the scenarios described in Sections 2.2 and 2.3.

Process knowledge is considered adequate for the further treatment/disposal/recycle of wastestreams such as lead and

mercury. In both cases the metal is available as a hazardous waste but that knowledge alone suffices to allow for proper storage, treatment, and disposal.

Nonroutine solid waste is periodically generated throughout LANL. This waste will be analyzed for TCLP metals, nickel, and thallium. This allows confirmation of the presence of inorganic LDR material. The absence of organic LDR will be established by either documented KOP or analyses. The test methods employed are listed in Table A-3. Sampling is performed using a core sampler if possible or a grab sampler if it is not possible to penetrate the waste with a core sampler. Because this is defined as a nonroutine wastestream, every unique drum or batch will be sampled.

There is one routinely generated inorganic solid waste at LANL. It is the barium contaminated sand from the explosives burning operation. Barium is the only established parameter of concern for treatment and therefore is the only parameter routinely analyzed for. Annually, a sample will be analyzed for the other listed metals. Sampling is conducted with a core sampler. Test methods are listed in Table A-3.

If a nonroutine wastestream becomes a routine waste or a new wastestream is identified, it will follow the pattern established in the above paragraph. Routine testing parameters will be established and reverified on an annual basis.

2.7 Explosives Waste

Due to the limited number of areas producing explosives waste and the safety problems associated with analyzing explosives waste, process knowledge of the waste sent for treatment by open burning or open detonation is the waste analysis record. Open burning/open detonation is conducted under interim status per HWMR-5 Part VI, Section 265.382.

2.8 Contaminated Solid Waste

The waste covered by this category is generally classified as debris. Contaminated soil would be addressed under the respective chemical category as outlined in the above sections. The contaminant of concern is known for all waste in this category but the substrate can not be readily analyzed. Therefore, until the item in question is cleaned it is treated as a hazardous waste. The types of waste covered by this provision would be tanks and rags.

2.9 Waste Treatment Residuals

Waste treatment residuals are the liquid and solid wastestreams resulting from the treatment of a hazardous waste, such as: the treated liquid and precipitate from chemical treatment operations at either TA-50 or TA-54 and the scrubber water and ash from the incinerator. Barium contaminated sand is also a treatment residue but because it receives further chemical treatment it is discussed in Section 2.6.2.

The liquid from chemical treatment operations is tested to insure that (a) treatment is complete and (b) remaining chemical concentrations are within the discharge guidelines established under the NPDES permit for the TA-50 radioactive treatment system. Sections 2.2 and 2.3 discussed the procedure used to establish those parameters that would be tested for at the conclusion of the treatment. If documented KOP can not exclude the presence of F-listed solvents, then each batch of treatment supernate will be tested for the compounds listed in 261.3(a).2.iv.A and B. Samples from the Batch Waste Treatment Unit are taken from a sampling loop. Samples from the treatment tanks at TA-54 will be taken by either coliwasa (or equivalent) or grab sample. Test methods used are provided in Table A-3. The scrubber water from the incinerator will always be within the discharge guidelines established under the NPDES permit for the TA-50 radioactive treatment system thereby negating chemical analysis. The scrubber will be analyzed annually to verify this.

Solids from the chemical treatment operations and the ash from the incinerator are tested for the TCLP metals that were established before treatment to be present. As necessary, these wastes are then cemented or otherwise solidified. The solidified matrix may again be sampled by removing a sample from the mixture before curing. After curing, it is tested for the same TCLP metals. Assuming there is no listed materials present, this would allow a determination to be made as to whether the waste remained a hazardous waste or not. This procedure would be followed for each batch of solids requiring processing.

2.10 Unknown Material

Occasionally, chemicals of an unknown nature require disposal. These wastes are handled on a case-by-case basis. The individual waste may be tentatively characterized by knowledge of the operations and activities that were performed in the specific area in which the waste was generated. This information is used to restrict the choices of initial waste analysis to a small population of chemicals.

For purposes of managing unknown wastes a small volume is defined at LANL as less than one liquid gallon (or approximately four

liters). The rationale for the small volume designation is that this is the minimum quantity of sample which is needed to test if the waste is hazardous. At and below this limit the sample is actually consumed in the analytical procedure. Small volumes of unknown wastes are analyzed for pH, flashpoint, and reactivity. This allows the material to be categorized for further handling.

Volumes greater than one gallon or four liters of a single unknown waste require a more detailed analytical scheme. These wastes are tested for hazardous waste characteristics and any other analyses indicated by the initial data gathered on the material. Sufficient detail must be reported to allow the assignment of the proper EPA Hazardous Waste Number to the waste. All test methods used are outlined in Table A-3.

TABLE A-1
WASTESTREAMS, ANALYTICAL PARAMETERS, AND RATIONALE

Wastestream	Analytical Parameters	Rationale (Section Reference)
Organic Waste		
- Uncomposited labpack	Packing list	2.1.1
- Drummed	pH, TCLP metals, TOX, TOC, ash content, viscosity, heat value, sulfur, chemical composition	2.1.2
- Composited labpacks and drums	List of chemicals, pH, flashpoint, ash content, viscosity, heat value, TOX, TOC	2.1.3 2.1.4
Corrosive Acid		
- Labpack	pH, as necessary	2.2.1
- Nonroutine nonmetallic process waste	pH, TCLP metals, nickel, thallium	2.2.2
- Nonroutine metallic process waste	pH, TCLP metals, nickel, thallium	2.2.2
- Routine nonmetallic process waste	pH	2.2.2
- Ferric chloride	pH, chromium, silver, lead, copper	2.2.2
- Ammonium persulfate	pH, lead, mercury	2.2.2
Corrosive Base		
- Labpack	pH, as necessary	2.3.1
- Nonroutine nonmetallic process waste	pH, TCLP metals, nickel, thallium	2.3.2
- Nonroutine metallic process waste	pH, TCLP metals, nickel, thallium	2.3.2

TABLE A-1 (CONT)
WASTESTREAMS, ANALYTICAL PARAMETERS, AND RATIONALE

Wastestream	Analytical Parameters	Rationale (Section Reference)
- Ammonium etchant	pH, copper, lead	2.3.2
- "Replenisher"	pH, lead	2.3.2
- "Cuposit"	pH, mercury	2.3.2
Oxidizer		
- Labpacks	Packing list	2.4
Reactive		
- Labpacks	Packing list	2.5.1
- Process waste	Knowledge of process	2.5.2
Inorganic		
- Labpack	Packing list	2.6.1
- Primary metals	Knowledge of process	2.6.2
- Nonroutine solid	TCLP metals, nickel, thallium	2.6.2
- Barium sand	Barium	2.6.2
Explosives	Knowledge of process	2.7
Contaminated Debris	Knowledge of process	2.7
Waste Treatment Residues		
- Chemical treatment liquids/solids	Previously established parameters	2.9
- Incinerator ash	Previously established parameters	2.9
- Incinerator scrubber water	Knowledge of process	2.9

TABLE A-1 (CONT)
WASTESTREAMS, ANALYTICAL PARAMETERS, AND RATIONALE

Wastestream	Analytical Parameters	Rationale (Section Reference)
Unknowns		
- Small volume (<1 gal.)	pH, flashpoint, reactivity	2.10
- Large volume	All parameters necessary to identify waste completely	2.10

TABLE A-2
PACKAGING SEGREGATION SCHEME

STORAGE CATEGORY	PACKAGING CATEGORY	RNG
Organics (1)	A	4, 5, 9, 13, 14, 16, 17, 19, 26, 29, 31, 32, 101
	B	6, 7, 8, 27, 28
	C	12, 20
	D	34, 18
Oxidizers (2)	A	2
	B	104
	C	30
Acids (3)	N/A	1, 3
Bases (4)	N/A	10, 11, 33, 105
Reactives (5)	N/A	21, 22, 25, 102, 107 - ALL STORED INDIVIDUALLY - NO COMBINING ALLOWED
Nonreactive Metals (6)	N/A	11, 15, 23, 24, 33 - 11 and 33 would only be allowed in labpack, solid quantities
Others		The following must be evaluated on a case-by-case basis to determine which of the above categories is appropriate: 25, 102, 103.

TABLE A-3
WASTE ANALYSIS PARAMETERS AND TEST METHODS

Parameter	Test Method	Reference[1]
Ignitability	Pensky-Martens Closed-Cup Method	(L) SW1010 (L) ASTM D93-80
Reactivity	Numerous methods and tests[2]	(L,S) SW Section 2.1.3
pH	Electrometric	(L) SW9040
TCLP	TCLP Extraction[3] and Graphite Furnace AA Spectroscopy	(L,S) SW1310
Arsenic		(L) SW7060
Barium		(L) SW7081, SW7080
Cadmium		(L) SW7131, SW7130
Chromium		(L) SW7191, SW7190
Lead		(L) SW7421, SW7420
Selenium		(L) SW7740
Silver		(L) SW7761, SW7760
Mercury	TCLP Extraction[3] and Manual Cold Vapor Technique	(L,S) SW1310
Organochlorine Pesticides	TCLP Extraction[3] and Gas Chromatography	(L) SW8080
Chlorinated Herbicides		(L) SW8150
Toxicity Characteristic Leaching Procedure (TCLP)		(L,S) 40 CFR Part 268, Appendix I
Chemical Composition	95% organic composition by GC/FID	(L) SW8100

TABLE A-3 (CONT)
WASTE ANALYSIS PARAMETERS AND TEST METHODS

Parameter	Test Method	Reference[1]
Trace Organic Analysis	Any of the following:	
	Volatile organic compounds-GC/MS	(L) SW8240
	Semi-volatile organic compounds-GC/MS	
	-Packed column	(L) SW8250
	-Capillary column	(L) SW8270
Heat Value	Bomb calorimeter	(L) A006, ASTM D240
Organic Chlorine	Halide titration of combustion residue	(L,S) A004, ASTM D2361
Ash Content	Residue after combustion in muffle furnace	(L) A001, ASTM D482 (L) A001, ASTM D3174
Cyanide-Free and Total	Distillation and colorimetric (UV)	(L) SW9012
Chrome	Colorimetric method for hexavalent chromium	(L) SW7196
Sulfide	Colorimetric titration	(L) SW9030

TABLE A-3 (CONT)
WASTE ANALYSIS PARAMETERS AND TEST METHODS

Parameter	Test Method	Reference[1]
Total Metals	Digestion and inductively coupled plasma method	SW3020
Arsenic		(L) SW6010
Barium		(L) SW6010
Beryllium		(L) SW6010
Cadmium		(L) SW6010
Chromium		(L) SW6010
Lead		(L) SW6010
Nickel		(L) SW6010
Selenium		(L) SW6010
Silver		(L) SW6010
Thallium		(L) SW6010
Zinc		(L) SW6010
Mercury	Manual cold vapor technique (S) SW7471	(L) SW7470
Free Liquids	Paint filter liquids test	(S) SW9095

(1) "A" refers to Sampling and Analysis Methods for Hazardous Waste Combustion, EPA-600/8-84-002, February 1984.
"ASTM" refers to American Society for Testing Material Standards.
"SW" refers to Test Methods for Evaluating Solid Waste, Physical/Chemical Methods, 3rd Edition, EPA, November 1986.
"L" refers to liquid waste.
"S" refers to solid waste.

(2) Methods for cyanide and sulfide gas generation are pending. SW-846 methods will be used when they become available. Methods recommended by EPA will be used in interim.

(3) If TCLP and other analyses do not permit identification of an unknown chemical waste, digested metal samples (per SW3020) will be analyzed for the metals noted.

APPENDIX A

QUALITY ASSURANCE PROJECT PLAN (QAPjP)

PACKED-BED REACTOR/SILENT DISCHARGE PLASMA UNIT

QUALITY ASSURANCE PROJECT PLAN (QAPjP)

1.0 INTRODUCTION

The listing below provides pertinent information relative to this RD&D permit application. Details of the project are provided in the following sections.

- Project: Packed-Bed Reactor/Silent Discharge Plasma Treatment Unit
- Date of Project Initiation: June 1993
- Project Officer: Louis A. Rosocha
- LANL Quality Assurance Director: Tony Grieggs
- Project Description: PBR/SDP technology uses an advanced oxidation technique for the treatment of hazardous wastes as a two stage treatment process. The first stage involves injection of liquid organic hazardous wastes into the externally heated PBR, where many of the hazardous compounds undergo vaporization and thermal decomposition. More complex organic compounds, however, may resist thermal destruction within the PBR and require further treatment. The effluent from the PBR passes into the second stage of the process, the SDP, which is comprised of a non-thermal electrical discharge plasma. Large quantities of reactive free radicals are generated in the plasma, and the free radicals react with and decompose the remaining hazardous organic constituents in the effluent. The end products of the PBR/SDP waste treatment processes include primarily carbon dioxide, water, carbon monoxide, and acids.

2.0 PROJECT DESCRIPTION

2.1 Objective and Scope Statement

The research objective of work under this permit is to demonstrate that similar destruction of components of a waste can be achieved as when the components were run alone as surrogates. The main purpose of this permit will be to allow the research to continue into the phase where an actual waste may be processed by the unit. If successful then modifications to this application may be made to deal with different and more complexed waste than those purposed at this time.

It is not considered a possibility for this phase of the research that the analytical data or conclusions upon the data will be used in litigation. The main objective of the research is to produce comparable data with that of the surrogate data in order to determine if this line of research is worth pursuing on more complex hazardous waste in future research.

Quality assurance policies, outlined in Los Alamos Quality Assurance Program Plan (QAPP) and this Quality Assurance Project Plan (QAPjP) Sampling Activities will be adhered to throughout the term of this project. General sampling and quality control procedures are outlined and referenced within this specific QAPjP, where applicable.

2.2 Data Usage

The data collected on real waste will be used as a verification of data collected on waste surrogates. The research samples will be submitted to LANL's on-site laboratory for analysis.

The data obtained during this project will be used to assess the comparability of the data sets and the destructive effectiveness of the unit.

LANL will employ the "t" statistical test to determine if there is a difference between the two data sets. "t" will be defined as the difference between the means of the two sampling efforts divided by the standard error of the difference between the means of the two sampling efforts. "t" values will be used to compute the confidence limits of the data.

2.3 Schedule of Task and Products

The schedule for this project is dependent on the issuing of the RD&D permit by the State of New Mexico. A tentative schedule has been developed and is presented below:

TASKS	ANTICIPATED DATES
Start Project	February 1, 1994
Runs with Waste One	March 1 - June 1, 1994
Runs with Waste Two	June 1 - September 1, 1994
Runs with Waste Three	September 1 - December 1, 1994

3.0 PROJECT ORGANIZATION AND RESPONSIBILITY

The following is a list of key personnel and their corresponding responsibilities:

NAME	RESPONSIBILITY
Louis Rosocha	Principal Investigator
John Coogan	Scientific and Technical Oversight, Daily Operations, Analytical Diagnostics, Process Modeling
Roger Tenant	Mechanical Engineering Support
Mike Kang	Electrical Engineering Support
Graydon Anderson	Analytical Diagnostics and Instrumentation
Rudy Vargas	Overall Technician Support
Heidi Heck	Analytical Diagnostics and Instrumentation
Laurie Bechtold	Process Modeling

4.0 QUALITY ASSURANCE OBJECTIVES

Quality assurance objectives are provided in LANL's Quality Assurance Program Plan. Analytical methods for the parameters are specified in this document. The main objective of the research is to produce comparable data using a real waste stream with that of surrogate data to determine the effectiveness of the proposed process. Therefore, the level of QA/QC purpose is only that necessary to achieve the scientific and regulatory objectives of the project.

4.1 Measurement Objectives

Analytical measurements will be conducted by the LANL laboratory and will be performed in accordance with the QA procedures detailed in this QAPjP and in SW-846 (Revision 0, November 1990) for organics and inorganics analyses. Laboratory data will be validated according to the quality assurance protocols established for the CLP program.

4.2 Method Detection Limits

Detection Limit: As specified in the CLP's SOW for inorganic analysis, Appendix C, CLP SOW for Organic Analysis, the EPA Standard Method or the special analytical services (SAS) request for Organic Analysis.

4.3 Data Quality Objectives

4.3.1 Precision and Accuracy

The compounds that will be sampled and analyzed for under this QAPjP are listed in the Parameter Table in Section 5.0. The initial acceptance criteria for data precision, expressed as relative percent difference (RPD) of duplicate samples, is set at 50 percent or less. The initial acceptance criterion for accuracy, expressed as spike recovery percent (SRP), is 50 to 150 percent. Acceptance criteria may not be applicable to duplicate samples containing an analyte at a concentration less than 5 times its detection limit. Data quality objectives for laboratory accuracy and precision are established for each measurement parameter in accordance with the applicable methods of SW-846 (Rev. 0, November 1990), Third Edition 1986.

Accuracy expresses the nearness of a result or a mean of a set of results to the true value. Accuracy of laboratory data is assessed by means of reference samples and percent recoveries. Accuracy for field sampling is achieved by increasing the number

and size of samples collected, and by establishing a sound sampling strategy. The accuracy goals of this project will be addressed by the use reference materials of the highest purity, for method calibration, and sample spiking.

The use of spiked samples permit a constant check on method accuracy and will provide an indication of the degree of matrix effect. This will be expressed in terms of percent recovery.

$$\% \text{ Recovery} = \frac{(\text{Spiked Sample}) - (\text{Unspiked Sample})}{\text{Spike}} \times 100$$

This value will be calculated for all spiked samples.

Precision measures the degree of a set of duplicate results among themselves without assumption of any prior information as to the true result. For laboratory data, precision is assessed by means of duplicate/replicate sample analyses, and is expressed in terms of standard deviation. For sampling, precision is achieved by collecting an appropriate number of replicate samples to ensure that representative samples are collected. The relative percent difference (% RPD) will be calculated for each pair of duplicate analysis using the following equation:

$$\%RPD = \frac{S - D}{(S+D)/2} \times 100$$

S = First sample value
D = Second sample value

For laboratories, the minimum QC requirements for organic and inorganic routine laboratory analysis consist of both an initial and ongoing demonstration of laboratory capability to generate acceptable precision and accuracy with methods in the analysis of samples. The QC procedures that must be performed and documented, and criteria that must be met include, but are not limited to, the following:

For Organics Analysis:

- GC/MS Instrument tuned for both volatile and semi-volatile compound analysis;

- Initial multi-level calibration for each Target Compound List (TCL) compound;
- Continuing calibration for each TCL compound;
- Addition of surrogate compounds to each sample blank for determining percent recovery information;
- Replicate samples; and
- Reagent blank analysis.

For Inorganics Analysis:

- Initial calibration and calibration verification;
- Continuing calibration verification;
- ICP interference check sample analysis;
- Preparation blank analysis;
- Matrix spike analysis;
- Duplicate sample analysis; and
- Laboratory control sample analysis.

4.3.2 Data Representativeness

Representativeness expresses the degree to which data accurately and precisely represents the characteristics of a population, parameter variations at a sampling point, a process condition, or an environmental condition. For split samples, representativeness is achieved by splitting at least 10% of the facility's sample location.

4.3.3 Data Comparability

Comparability expresses the confidence with which one data set can be compared to another. In order to establish a degree of comparability such that observations and conclusions can be directly compared with all historical data and the surrogate data set, LANL will use standardized methods for holding times, preservations and shipping. Since EPA analytical methods will be used to analyze the research samples and compare to the methods used to analyze the surrogate samples, any comparison for this data will be of a qualitative nature.

4.3.4 Data Completeness

Completeness measures the amount of valid data obtained from a measurement system compared to the amount that was expected to be obtained under normal conditions. The data quality objective for the completeness of data with respect to the sampling is 90%. If this data quality objective is not met, LANL will review the need for resampling.

5.0 SAMPLING PROCEDURES

5.1 Introduction

Since the research objective of work under this permit is to demonstrate that similar destruction of components of a waste can be achieved as when waste components were processed alone as surrogates. The main purpose of this permit will be to allow the research to continue into the phase where an actual waste may be processed by the unit. It can be anticipated that similar destructive efficiencies can be achieved as those with the surrogate work. If successful then modifications to this application may be made to deal with different and more complexed waste than those purposed at this time.

With this in mind, similar parameters will be monitored as were monitored during the surrogate experiments. Since most of the components anticipated to be used in the present research have already been shown to be more than 99% destroyed in previous surrogate work with this unit, it is not anticipated that process effluents will be hazardous.

5.2 Number of Samples

The number of samples, as well as the simple sampling strategy outlined in this section, are chosen based on the following:

- The objective of the sampling is to produce results for the purpose of assessing suppositions and thereby needing the simplest strategy and less quality control of the EPA project categories.

- The waste is well known, already having waste analysis information and components that have already been shown to be destroyed greater than 99% in testing with surrogates.

- The present research situation will readily allow for an increase or decrease in sampling effort to meet both scientific and regulatory objectives.

The number of samples will allow for a confidence interval equal for the sample measurement mean to be compared with the applicable regulatory threshold for constituents to determine if it is at a hazardous level. The constituent of concern will not be considered to be present at a hazardous level if the upper limit of the confidence interval is less than the applicable regulatory threshold.

$$CI = \bar{x} \pm t_{.20}\, s_{\bar{x}}$$

CI = confidence interval
$\bar{x}$ = mean of measurements
$t_{.20}$ = t value for a probability of 10 and single tailed test
$s_{\bar{x}}$ = standard error of mean

Initially, the number of samples will be three based on the lack of hazard for the reasons given above. This number allows a favorable "t" value than one or two. The number of samples will be increased or may be decreased to achieve the necessary confidence interval based upon the following:

$$n = \frac{t^2_{.20}\, s^2}{(RT-\bar{x})}$$

n = number of samples
RT = regulatory threshold
s = standard deviation of sample

5.3 Sampling Methods

The sampling methods to be used are chosen because of their ease of use in the present situation, the low degree of hazard associated with them, and will minimize sample contamination. The waste containers involved make these the simplest and most efficient choice.

The Coliwasa is recommended in Chapter Nine of "Test Methods for Evaluating Solid Wastes," Third Edition, November 1986, for sampling free-flowing liquids and slurries contained in drums or shallow tanks, and similar containers. Chapter Ten of the same reference recommends Method 0030 for the sampling of gaseous effluents.

Representative samples from the waste container and effluent containers will be contained by using those techniques outlined in the various SW-846 analytical methods to be used or in Chapter Nine of "Test Methods for Evaluating Solid Waste," EPA, Third Edition, SW-846, November 1986. Samples will be collected using a systematic sample strategy described below.

All wastes to be treated will originate from operations at the LANL facility. All wastes will be permitted and will be selected based upon the waste analysis information existing under the LANL permit. Selection of waste containers will be based upon components within the waste matching those already tested as surrogates with the unit.

Prior to treatment in the PBR/SDP processing unit, each container of waste selected will be sampled at 3 depths and analyzed by EPA Methods 9070, 7000, 8240, and 8270. A sample using a coliwasa or glass tube from the upper third, mid-depth and lower third area of the waste container will be considered representative for the purpose of this phase of the research. All samples will be kept on cold packs until they are ready for analysis at LANL's on-site laboratory.

This input waste characterization of the waste container will be performed to ensure that the initial characterization is accurate and up-to-date. If the analysis of the major waste components is not within 80-120% of the existing waste analysis data for the container, then it will be rejected and a new container will be used in its place.

Additionally, during the experimental runs from each 55-gallon container of waste treated, a minimum number of samples, as specified in the Parameter Table, of the liquid and gaseous effluent will be collected and analyzed by EPA Methods 9070, 7000, 8240, and 8270 for metals, volatiles, and organic constituents, respectively. This analytical data will verify that the hazardous constituents are being destroyed by the PBR/SDP treatment process.

The minimum frequency of sampling using SW-846 methodologies, as specified in the Parameter Table, will be to collect a complete set of monitoring samples (at least one sample per monitoring gas effluent monitoring points labelled "A" through "D" in Figures 9 and 10 of the permit application and one sample per two liquid collection points shown in Figures 9 and 10). One complete set of samples will be collected during research runs using the upper third of material in the waste container, a second complete set using the middle third of waste container material, and a third complete set using the lower third of waste container material. Every time a complete set of samples is collected, a trip blank and a duplicate will be collected as indicated in the Quality Assurance samples on the Parameter Table.

Process liquid effluent sample will be collected by sampling the effluent collection container using a coliwasa or glass tube at

mid-depth of the container and then transferring the liquid to the appropriate container as specified in the Parameter Table.

Gaseous effluents will be collected as specified by EPA Method 0030 (SLO-VOST) and analyzed by EPA Method 8240 for volatile organic constituents. This method will allow for the changes in flow rates and sampling times that may be necessary to improve detection limits during present work, since very low levels, if any, or organic constituents are expected in the gaseous effluent. All samples will be kept on cold packs until they are ready for laboratory analysis.

Supplemental analyses may be performed for process monitoring points described in Section 3.3 of the permit application employing SW-846 Methods 8010 and 8015 using an in-line gas chromatograph capable of continuous monitoring, when necessary. This diagnostic equipment is similar to that used in the surrogate experiments and will increase the capability of the data as well as providing more detail on the process.

PARAMETER TABLE

Research Samples*

Parameter	Total Metals**	Target Volatiles	Target Semi-volatile	Oil/Grease
Matrix	Liquid	Liquid Gas	Liquid	Liquid
Minimum Number of Samples	3	3	3	3
Analytical Method Reference	SW-846 7000	SW-846 8240	SW-846 8270	SW-846 9070
Sample Preservation	HNO_3 to pH<2 4°C	HCl to pH<2 4°C	4°C	5 ml HCl 4°C
Holding time	6 months	14 days	7 days to extraction, 40 days to analysis	14 days
Container	1L poly	2x40 ml	1L Amber glass	1L glass

* Per gas and liquid monitoring points shown in Figures 9 and 10 of permit application.

** Mercury and cyanide will not be analyzed for.

Note: Analyses will only be performed for those constituents known to be present in the waste stream.

PARAMETER TABLE
(Continued)

Trip Blank*

Parameter	Total Metals	Volatiles	Semi-volatiles
Number of Samples	1	1	1
Analytical Method Reference	SW-846 7000	SW-846 8240	SW-846 8270
Sample Preservation	HNO_3 to pH<2 4°C	HCl to pH<2 4°C	4°C
Holding Times	6 months	14 days	7 days to exchange 40 days to analysis
Container	1L poly	3x40ml VOAs	4 amber 1 liter glass bottles

* Fill the appropriate sample containers with either HPLC water (for organic samples) or deionized water (for inorganic analysis).

PARAMETER TABLE
(Continued)

Duplicates*

Parameter	Total Metals	Volatiles	Semi-volatiles
Number of Samples	1	1	1
Analytical Method Reference	SW-846 7000	SW-846 8240	SW-846 8270
Sample Preservation	HNO_3 to pH<2 4°C	HCl to pH<2 4°C	4°C
Holding Times	6 months	14 days	7 days to extraction 40 days to analysis
Container	1x1L poly	2x40ml VOAs	4 amber 1 liter glass bottles

* The duplicate sample will measure the accuracy of sampling techniques. Assign the actual sample number to one group of containers and give the other group a "blind" name.

6.0 SAMPLE CUSTODY

Purpose: Due to the lack of evidentiary nature of the samples collected on this project, the nature of the research objectives, and the availability of the on-site laboratory at LANL, simple Chain-of-Custody procedures will suffice for this project.

A sample is under custody if:

1. It is in your possession, or
2. It is in your view, after being in your possession, or
3. It was in your possession and you locked it up, or
4. It is in a designated secure area.

Procedures:

- Collect only the number of samples needed to meet the research/QC objectives. To the extent possible, determine the quantity and types of samples and sample locations prior to each unit run. As few people as possible should handle samples.
- Sample tags shall be completed for each sample, using waterproof ink.
- The Project Manager determines whether proper custody procedures were followed during the research work and decides if additional samples are required.

Transfer of Custody

- Samples are accompanied by a Chain-of-Custody Record (see Chain-of-Custody Record on the following page). When transferring the possession of samples, the individuals relinquishing and receiving will sign, date, and note the time on the record. This record documents sample custody transfer from the sampler, often through another person, to the analyst in the LANL laboratory.
- Samples will be packaged properly for delivery to the laboratory for analysis, with a separate custody record accompanying each shipment.

CHAIN-OF-CUSTODY RECORD

PROJECT NAME/NUMBER _____ LAB _____

SAMPLE TEAM MEMBERS _____

Sample Number	Sample Location and Description	Date and Time Collected	Sample Type	Container Type	Condition on Receipt (Name and Date)

Special Instructions: _____

Possible Sample Hazards: _____

SIGNATURES: (Name, Company, Date and Time)

1. Relinquished By: _____ 2. Relinquished By: _____

Received By: _____ Received By: _____

- All samples will be accompanied by the Chain-of-Custody Record identifying its contents. The original record will accompany the shipment, and the copy will be retained by the Project Manager.

6.2 Sample Tags

Purpose: This procedure establishes a method for the control of laboratory samples through the use of sample tags. (See sample tag on the following page.)

Procedures:

- All sample tags will be securely attached to the sample bottle.

- One tag will be completed for each sample container collected. (The tag will be looped around the neck of both bottles.) Each tag will contain the following information:

  - Run number;
  - The time and date the sample was collected;
  - Signature(s) of the sampler(s);
  - If a preservative has been added to the sample, the name of the preservative will be written; and
  - All appropriate analyses to be performed by the laboratory, for this sample.

  Since all samples will be analyzed by LANL, at a minimum, the laboratory shall document the sample numbers accepted and provide this information to the research project manager on a weekly basis.

6.3 Research Logbooks

Definition: The Research Logbook is used to record data and observations in sufficient detail to enable an accurate reconstruction of activities. It is a controlled document issued to the project manager who, in turn, transfers each logbook to the individual(s) assigned specific research activities. The project manager is responsible for ensuring the logbooks are available during all research activities and are stored safely to avoid possible damage or tampering. Any lost, damaged or voided logbooks must be reported to the project manager immediately.

SAMPLE TAG

Project Name _____

Run No _____

Sample No _____

Collection Date/Time _____

Collector's Name _____

Sample Location _____

Analyze For _____ Preservative _____

Bottle _____ of _____ ____ Filtered ___ Nonfiltered

Format Requirements

All logbooks must be bound notebooks. Each logbook must be assigned an individual, serialized document control number.

All entries in the logbook must be dated, legible and written in waterproof, black ink. When a mistake is made, it must be crossed out with a single line, initialed, and dated. Each page of the logbook must be signed and dated by the individual(s) making the entry.

SUPPLEMENTAL LOGBOOK INFORMATION

Separate items used or generated at the research site are to be considered supplemental logbook information. These items may include, but are not limited to, sample log sheets, original data printouts from instruments, data summary sheets, and observation notes. These items must be permanently attached to the corresponding logbook.

Any verbal observations of research activities preserved using a tape recorder should be promptly transcribed, verified for accuracy, initialed, and dated. A copy of the transcription must be permanently attached to the corresponding logbook. The original recording of the data must be retained for the evidentiary files.

As with the logbook, supplemental logbook information must be signed and dated by the author(s). When a mistake is made, it must be crossed out with a single line, initialed, and dated. At a minimum, the information below must also be recorded on supplemental items.

- Project Name
- Project identification number, if applicable
- Logbook number of which the item is a supplement
- Page identification (e.g., Sheet __ of __)

During the sample activity, LANL personnel will note the following in the research logbook:

- Date and time;
- Sample description;
- Any evidence of contamination;

- Sample identification number;
- Equipment used and calibration results;
- Any preservation requirements;
- Deviations from approved Work Plan, or other problems; and
- Notes of conversations with project coordinators.

7.0 CALIBRATION PROCEDURES FREQUENCY AND PREVENTIVE MAINTENANCE

All instrumentation utilized for research activities will be calibrated in accordance with specific techniques provided by the manufacturers. A preventive maintenance schedule recommended by the respective manufacturers will be followed for each instrument. The calibration procedures for each instrument are maintained in the research laboratory, a copy of which will be available to research personnel. The laboratory calibration is delegated to the laboratory. Written calibration logs will be maintained by the Project Coordinator. Calibration of laboratory instrumentation is the responsibility of the LANL laboratory, documentation and recordkeeping will be those required under the CLP procedures.

8.0 ANALYTICAL PROCEDURES

The wastes to be processed will be existing LANL wastes that are stored under LANL's Permit and waste analysis plan. The wastes to be processed will be chosen to contain target compounds that match the already tested surrogates.

The parameters, for which effluent samples will be analyzed, will be the same sample parameters as listed in the waste analysis sheet to ensure that the initial characterization was accurate and up to date.

All analytical parameters will be analyzed by the on-site LANL laboratory. Analytical methods are specific in the Parameter Table. Specific analytical procedures are outlined in the SW-846 methods.

The analytical laboratory will submit summary reports of analytical results to the research project manager. At a minimum, the summary reports shall contain (1) laboratory review/approval date and signature; (2) date sample received; (3) sample preparation date; (4) sample analysis date; (5) preparation and analysis method reference; (6) sample identification number; (7) laboratory sample identification number; (8) sample reporting or detection limit; (9) dilution factors; and (10) laboratory quality control sample results indicating calculated percent recoveries, relative percent differences and self-imposed control limits (if applicable), as specified in the SW-846 Method being used.

9.0 DATA REDUCTION, VALIDATION AND REPORTING

9.1 Documentation

All findings will be referenced in the reports (to the fullest extent possible). All reports produced are entered in the LANL Document Control System. The QAPjP and the SOP will be available to research personnel. Research logbooks will be maintained by the Project Coordinator and will include a log of daily activities, deviations from the QAPjP, and a record of field conversations.

9.2 Data Reduction and Reporting

The format for reporting analytical data will contain the information specified in the CLP Regional Analytical Services (RAS) protocols for analyzing TCL organics, and TAL inorganics. Examples of these reporting formats are given in Appendix B "RAS Deliverables and Data Reporting Forms" of the User's Guide to the CLP. Data reduction and reporting is the responsibility of the LANL laboratory performing the analysis.

9.3 Data Validation

Data validation procedures establish a technically-sound and documented approach to accept or reject data in a uniform and consistent manner. All analytical data generated under SW-846 Methods during this project will undergo independent data validation performed in accordance with the EPA Functional Guidelines for Organic and Inorganic Data Validation. (February 1, 1988)

10.0 INTERNAL QUALITY CONTROL CHECKS

Details of the quality control procedures are outlined in the Los Alamos Quality Assurance Program Plan.

Specific quality control samples for this work include duplicate samples. Other quality control samples include equipment blanks, to be included with each sample shipment. These designations are included in the Parameter Table of this plan.

Laboratory quality control samples are specified in the various SW-846 Methods.

Routine internal quality control checks are a function of the Project Manager conducting quality control checks. A summary report of quality control is submitted with each data package.

11.0 PERFORMANCE AND SYSTEMS AUDIT

11.1 Introduction

The LANL QA Program includes audits as independent checks on the quality of the data obtained from the sampling, analysis, and data gathering activities. Every effort will be made to have the audit assess a measurement audit in normal operation. The audit may show the need for corrective action.

11.2 Performance Audits

Performance audits are quantitative checks on different segments of project activities; they are most appropriate on sampling, analysis and data processing activities. Performance audit techniques include checks on sampling equipment, volume measurements and the analysis of QC samples and spiked samples. Performance audits of data processing can be conducted by using dummy sets of measurement data of known results to check calculation routines and/or "bad" data to trigger edit checks and check on error messages.

11.3 System Audits

System Audits are qualitative reviews of project activity to check that the overall quality program is functioning and that the appropriate QC measures are being implemented. The Project Manager will select a percentage of runs for audit by the LANL staff. If this project is audited, a written audit report will be provided to the state who were audited.

12.0 ROUTINE PROCEDURES USED IN DATA ASSESSMENT

After the completion of analysis, data validation and reporting, the laboratory sends copies of the data package to the Project Manager. Comprehensive QA audits will be performed by the laboratory. A copy of the analytical data package is forwarded to the Project Manager for inclusion in the appropriate report. This data will be summarized and tabulated in the final report.

Precision of the analytical results is predicated on the quality of samples collected. Quality Control Samples provide a means of evaluating the precision and quality of sample collection procedures.

Biases in the data are assessed by reviewing flagged data from the laboratory, and from the analysis of the quality control samples. Research generated data is assessed based on the adherence to this Quality Assurance Project Plan for Sample Collection and Method Analysis.

13.0 CORRECTIVE ACTION

Immediate corrective actions form part of normal operating procedures and are noted in project notebooks; problems not solved in this way require more formalized, long-term corrective action.

The essential steps in the system are:

- Identify and define the problem;
- Assign responsibility for investigating the problem;
- Investigate and determine the cause of the problem;
- Assign and accept responsibility for implementing the corrective action;
- Establish effectiveness of and implement the corrective action; and
- Verify that the corrective action has eliminated the problem.

The Project Manager will have primary responsibility for monitoring the activities of the research and identifying any quality problems. Any quality problems not resolved immediately will be brought to the attention of the LANL QA Director who will initiate the formal corrective action system described below.

14.0 REPORTS

The Project Director will submit a report of QA/QC activities to LANL QA. This report describes overall QA activities on the project, audits conducted, problems uncovered, and corrective action taken.

Revision 2
7/14/93

ATTACHMENT 3

DIAGNOSTIC EQUIPMENT

Los Alamos National Laboratory

RD&D Permit

ATTACHMENT 3

DIAGNOSTIC EQUIPMENT

Los Alamos National Laboratory
RD&D PERMIT

Techniques used to observe gas effluent from the PBR/SDP treatment unit may include mass spectrometry (MS), gas chromatography (GC), infrared absorption spectroscopy (IR), and ultraviolet (UV) absorption spectroscopy.

Mass Spectrometry (MS)

When a gas sample (at ambient pressure) is fed to the MS, it flows through a differentially pumped pair of orifice plates, such that the pressure in the ion source of the MS is about 10^{-3} torr. The MS is a UTI 100C quadrupole filter, with a closed ion source. The instrument is computer-controlled via a Spectralink interface.

Mass spectrometry presents many difficulties in the identification and quantification of species. For a moderate resolution system, the dynamic range of the electron multiplier is such that most species cannot be observed at levels below 10 - 1200 ppm, even when the ion in question is virtually absent in the background. Then there is the problem of fragmentation, in which several parent molecules may give rise to the same ion, and interference, in which two species may give rise to ions of the same mass. For example, CO cannot be detected in the presence of excess N_2 since both give mainly ions of m/e=28. Given these limitations, MS so far has not been able to quantify the species produced in the PBR and SDP, except for the major species such as O_2, CO_2, and H_2O, which may be more easily observed by other techniques. Thus, the MS technique is shown to provide evidence for the most abundant reaction products, which can then be quantified by other techniques.

The MS instrument will only be operated intermittently during the RD&D experiments.

Gas Chromatography (GC)

The GC instrument is a Perkin-Elmer Sigma 2000, equipped with both a flame ionization detector (FID) and an electron capture detector (ECD). The flow from the column is split so that both detectors may be used simultaneously. The virtue of this arrangement is that the detectors have very specific sensitivities; the FID primarily detects hydrocarbons, while the

ECD detects mainly chlorine-containing and other electronegative species.

The GC column used is a VOCOL (Supelco) wide bore capillary column (60 meters long, 0.75 millimeters inner diameter, 1.5 μm film thickness). The wide bore allows large sample sizes (500 μl) while maintaining the capillary column advantage of good separations with short retention times. The VOCOL column is the one used in EPA method 601, used for analyzing "purgeable halocarbons", which include all of the chlorocarbons likely to be produced in the PBR destruction of chlorinated organics. Using temperature programming, it will also be possible with the VOCOL column to analyze for unburned hydrocarbon species, although the peaks are not always well resolved for the smallest molecules. Thus, the column is kept at low temperature for a few minutes, during which C_1, C_2, C_3, etc., hydrocarbons elute, then the column is heated up to drive off the larger hydrocarbons and less volatile and/or more polar halocarbons (carbon tetrachloride, TCE, PCE, etc.).

The GC instrument will be operated continuously during the RD&D experiments.

Infrared (IR) Absorption Spectroscopy

A Beckman Acculab IR spectrometer and BIORAD FTIR spectrometer may also be used for monitoring of gaseous effluents from the PBR and SDP. The gas flow through the absorption cell is in series with the sampling loop on the gas chromatograph. The short path cell of the Beckman Acculab IR spectrometer and the low resolution of the instrument limit its use to measurements of major constituents only, such as carbon dioxide, carbon monoxide, and water. The FTIR, however, has a long path absorption cell and has shown the potential to identify species that are unable to be resolved by GC. Quantitative analysis is more difficult, however, since the absorbance often is not a linear function of species concentration.

The FTIR Spectrometer will be operated continuously during the RD&D experiments.

Ultraviolet (UV) Absorption Spectroscopy

A simple UV spectrometer was constructed to measure the absorbance of the PBR effluent in the 300-350 nm region. The purpose is to look for molecular chlorine (Cl_2), which has a strong, broad absorption band peaking at about 330 nm. None of the major reaction products (CO_2, CO, H_2O, hydrocarbons) absorb light in this region, so the system should be specific and sensitive to chlorine. The system consists of a deuterium lamp to provide continuum uv light, a 1-meter long absorption cell, a collection lens, and a 1/8 meter Oriel monochromator equipped with a PIN photodiode detector. The spectral slit width of the

monochromator is estimated to be about 5 nm. The monochromator may be scanned from 300-350 nm while the detector output may recorded on a strip chart recorder.

The UV absorption cell will only be operated intermittently during the RD&D experiments.

XI. EMERGENCY CONTACTS

Contact	Name	Work Phone	Home Phone
Emergency		911	
Laboratory	Louis Rosocha	7-8493	672-3250
	John Coogan	5-0186	
	Roger Tennant	7-3284	471-3954
	Rudy Vargas	7-6662	471-2041
Group Office (CLS-2)	Wayne Dansen	7-4686	672-3686
Group Office (CLS-6)	Martin Piltch	7-7102	
Group Safety Officer (CLS-2)	Carl Wilson	7-1177	662-9346
Group Safety Officer (CLS-6)	John Jolin	7-7314	
Group Waste Coordinator	Leon Sonntag	7-3741	473-3112
Group Spill Coordinator	Carl Wilson	7-1177	662-9346
Division Safety Officer	Barbara Skaggs	5-8878	
Building Manager	Jerry Umphres	7-2383	
Division Safety offifer			

ATTACHMENT 4

STANDARD OPERATING PROCEDURES (SOP)

Los Alamos National Laboratory

RD&D PERMIT

LOS ALAMOS

Los Alamos National Laboratory
Los Alamos New Mexico 87545

SOP SUBMITTAL

TO: HEALTH, SAFETY, AND ENVIRONMENT DIVISION SOP OFFICE (MS K489)

Author Name	Organization	Mail Stop	Telephone Number	Date Submitted
Paul J. Wantuck	CLS-2	J565	7-5249	3/31/92

SOP Title: Packed Bed Reactor/Silent Discharge Plasma System

Location of Operation: TA-35, Bldg. 128, low bay

SOP Status: ☐ New ☐ Revised ☒ Other (Specify) Compilation of existing/approved SOP and SWP

Return comments to: Name of Individual	Organization	Mail Stop	Telephone Number
Paul Wantuck	CLS-2	J565	7-5249

HAZARDS INVOLVED (Check all applicable)

- ☐ Explosives
- ☐ Confined Spaces and/or Spaces with Limited Egress
- ☐ Ionizing Radiation
- ☒ Fire
- ☐ Laser Light
- ☒ High Electric Potential and/or Current
- ☒ Toxic Materials or Biological Agents
- ☐ Liquid Hydrogen
- ☒ Other (Specify) Thermal burns, typical combusion gases (CO_2, CO) and HCl

Explanation/Comments

ORIGINATING OFFICE APPROVALS. *This SOP must be approved in accordance with established division procedures before it is submitted to the Health, Safety, and Environment Division SOP Office. Division leader approval is needed only if required by the originating division's SOP procedures.*

Group Leader Signature	Date	Division Leader Signature	Date
[illegible]	4/2/92	Allen Hartford	4/3/92

FOR HEALTH, SAFETY, AND ENVIRONMENT DIVISION USE ONLY

Review Groups

Hazard Types

HS Form Number 1-3A (6/84)

CLS-2:92-123
Created: 3/16/92

STANDARD OPERATING PROCEDURE

Title: Packed Bed Reactor/Silent Discharge Plasma System

Location: TA-35, Building 128

Group: CLS-2

Reviewed by:

Paul Wantuck, Originator

Carl Wilson, CLS-2 Safety Officer

Approved by:

Wayne C. Danen, Group Leader

Chemical and Laser Sciences Division Office:

Reviewed by:

C. Blackwell
Division Safety Officer

A. Hartford, Jr., Division Leader

HS Division Signature

SOP REVIEW SHEET

SOP Title:

Group:

Author:

Review Dates:	Reviewed By:	Status: (revised or no change)

PROJECT PERSONNEL SIGNATURES

I have read the attached SOP and will comply with the stated ES&H requirements.

Name	Date

AREA OCCUPANT SIGNATURES

I have read the attached SOP and recognize associated hazards in this area.

Name	Group	Date

STANDARD OPERATING PROCEDURE
Packed Bed Reactor/Silent Discharge Plasma System
Paul J. Wantuck, CLS-2
TA-35, Bldg. 128

I. SUMMARY DESCRIPTION OF ACTIVITIES

This document describes the procedures for safely operating the Packed Bed Reactor (PBR)/ Silent Discharge Plasma (SDP) system. This two-stage, thermal/plasma prototype represents an alternative-to-incineration apparatus which will be used for the destruction of machining oils and cutting fluids (namely Trimsol and Regal) as well as gaseous mixtures containing some fraction of chlorinated solvents (trichloroethylene, tricholoroethane). As the overall destruction efficiency of this technology has been shown to be very high, the resulting effluent will be composed almost exclusively of CO_2, H_2O and simple acids such as HCl. Sensitive on-line instrumentation provides a means of directly monitoring the waste stream composition.

II. LOCATION AND RESPONSIBILITY

This system will be located in the Alternative Combustion Laboratory (ACL) which comprises the northern half of the low bay area of Building 128 at TA-35. Lou Rosocha (CLS-6) is the principal investigator for this project and has overall responsibility for technical and program leadership, guidance and interfacing. Paul Wantuck, CLS-2, provides scientific and technical oversight to the project and is responsible for day-to-day operations.

III. ADDITIONAL PROJECT PERSONNEL

Other personnel who are authorized to operate this system are:

Roger Tennant, CLS-2 (mechanical engineering support)
Mike Kang, CLS-6 (electrical engineering support)
John Coogan, CLS-6 (electrical engineering and process modeling)
Graydon Anderson, CLS-4 (analytical diagnostics and instrumentation)
Rudy Vargas, CLS-2 (overall technical support)
Heidi Heck, CLS-6 (analytical diagnostics and instrumentation)
Laurie Berthold, CLS-6 (process modeling)

IV. APPARATUS DESCRIPTION

a. Packed Bed Reactor: A diagram of the PBR/SDP system is shown in Figure 1. Two bed reactors will be employed for the anticipated experiments. The smaller bed reactor is a stainless

steel cylinder with a diameter of 6.35 cm and a length of approximately one meter. The larger PBR (prototype version) is constructed of a Haynes alloy metal, has a diameter of 16.5 cm, and is 1.2 m long. Both reactors are filled with activated alumina beads producing a bed void fraction of approximately 50 percent. Operating temperatures for both PBR's range from 800 to 1000 C. The heat source for the reactors is a commercial electric tube furnace. For the smaller reactor, a single zone furnace is employed while for the larger version a three zone furnace allows for greater flexibility in axial temperature control.

The purpose of the packed bed reactor is to both volatilize and treat predominantly liquid based materials (which may or may not contain solvents) for subsequent processing by the second stage SDP. The liquid is introduced into the packed bed through a coaxial atomizer which acts to generate a fine spray above the bed material. The oxidizer gas will be either of air or a mixture of 20% oxygen and 80% argon. Flammable liquids are injected such that the fuel/oxidizer ratio is well below the lower explosion limit. In addition, by staying fuel lean it is possible to prevent the production of a flame. Thus, the PBR can be classified as a thermal treatment unit and <u>not</u> as an incinerator.

The atomizer on the small PBR has an average liquid flow capability of ~1 gm/min. For the 6" PBR, the fluid throughput should be on the order of 17 gm/min (~1 kg/hr). These numbers will vary slightly depending upon the composition and properties of the liquid.

The gas exiting the PBR is dropped in temperature by passage through a water-cooled heat exchanger. The gas can be directed through a series of traps (liquid trap, soda lime trap, activated carbon bed) and then to a stack exhaust or sent to the input of the silent discharge reactor. The exhaust line downstream of the PBR has ports which allow for gas sampling and subsequent analysis.

<u>b) Silent Discharge Plasma Reactor</u>: In general the SDP cells consist of two flat plate electrodes (at least one of which is covered by a dielectric barrier such as glass) which are physically separated to produce a discharge volume. Gas from the output of the PBR or from prepared mixtures is introduced into this volume, typically through a water bubbler, and subjected to a plasma discharge. The plasma discharge is initiated by application of a high voltage AC field to the electrodes. During the course of an experiment, feed gas pressure, gas flow rate, cell voltage and current, and consumed electrical power will be monitored. As with the PBR, the effluent exiting the SDP is sent through a series of traps and discharged through a stack vent. The effluent stream is monitored during operation with a variety of diagnostics.

Initial experiments will utilize a rectangular-shaped single cell employing an electrically grounded, nickel-coated bottom electrode and an upper water electrode which is connected to the high voltage power supply. A modified plasma cell which has a large volume and can process higher gas flow rates will be employed in later experiments.

c) Analytical Chemistry Diagnostics: The effluent stream from the PBR and SDP is analyzed with several on-line diagnostics including a Beckman Acculab 2 IR spectrophotometer, a Perkin Elmer Sigma 2000 Gas Chromatograph with both a flame ionization and electron capture detector (which allows ppb-detection and sensitivity), a UTI model 100C, 0-300 amu mass spectrometer, and a BIORAD FTIR spectrometer. These instruments provide a means of very accurately accessing the composition of the product (waste) streams.

V. HAZARDS AND PRECAUTIONS

V.1 Packed Bed Reactor

The hazards associated with PBR operation are thermal burns, flammable materials (oils), and hydrochloric acid which represents a process reaction product. The reactor operates at local atmospheric pressure obviating the need for pressure safety concerns.

The reactor is electrically heated to between 800 and 1000 C by a tube furnace which surrounds the bed. Exterior shielding prevents contact with reactor hot parts. The flammability issue is addressed by operating in a fuel lean condition, that is with the fuel/oxidizer ratio well below the lower explosive limit. For REGAL machining oil (which is >95% petroleum oil) the LEL is 0.6% by volume in standard air. The PBR typically operates at about 17% of the LEL. For comparable flow conditions, flammability is less of a concern for the TRIMSOL machining fluid, because even at 100% concentration, its composition is only 30% petroleum oil. IN the event of oxidizer gas flow cessation, a solenoid valve in the oil injector line closes preventing any further introduction of liquid compounds into the bed. Flow controllers are used to regulate the amount of material (gas and liquid) passed into the bed. Temperatures and pressures generated within the bed are constantly monitored by axially positioned thermocouples and mechanical gauges, respectively. Excessively high temperatures and pressures ("pinging") during the course of operation serve as an indication of approach to LEL.

Hydrochloric acid is formed as a waste product subsequent to the injection of chlorocarbon containing liquids into the PBR. A significant fraction of the HCl is removed (remaining fraction at the ppm level) by the bed material itself (wet HCL + alumina to form alumina chloride). Additional removal is provided by a liquid trap positioned downstream of the heat exchanger and upstream of the SDP inlet. In this trap, water containing dissolved HCl is condensed out of the effluent gas. A soda lime trap in conjunction with an activated carbon trap, both located in the exhaust line downstream of the SDP cell, provide for further removal of HCl. The PBR/SDP system is presently operating in an open loop configuration with final gas product exhaust through an outside-located stack. Note that only soda-lime and activated carbon traps will remove not only HCl but other unforeseen and undesired emission products. Thus, project personnel are not

exposed to waste stream components during system operation. Periodically, the bed material and other traps will have to be recharged and/or cleaned. During such operation, involved project personnel will wear safety glasses, lab coats and acid-resistant gloves. Prior to initiation of such activity, the appropriate MSDS will be reviewed. All employees must take Hazard Communication Training. The chemically contaminated material will be treated as hazardous waste and disposed of in proper fashion (see Section VI).

V.2. Silent Discharge Plasma Cells

The primary operational hazard with the SDP cells is high voltage. The power supplies utilized for cell operation have outputs as high as 30 kV with several tenths of an ampere peak current. Protection against high voltage exposure is accomplished in several ways. Only qualified project personnel are authorized to operate the SDP. The project's principal investigator shall designate such individuals. The SDP operators must be trained in CPR and have taken the Laboratory's electrical safety training course. At least two project personnel will be present in the ACL during SDP operation. The IEEE document entitled "IEEE Recommended Practices for Safety in High-Voltage and High-Power Testing" is utilized for general guidance in enacting operational procedures. A copy of this document is available at the ACL's ES&H station. The SDP cell is enclosed in a box constructed of polycarbonate panels. This box is interlocked with the high voltage power supply such that any attempt to access the cell during operation deactivates the power supply. Warning lights are activated during SDP operation and appropriate hazard signs are posted in the vicinity of the cell.

Secondary hazards associated with SDP operation include ozone and HCl generation as well as UV light emission from the plasma discharge. As noted previously, the PBR/SDP system represents an open loop configuration (with final gas discharge through a stack) such that reaction products produced within the cell are not released to the ACL environment. A thermal ozone destructor is connected to the SDP effluent line providing for effective elimination of O_3 from the reaction product stream. In general, the amount of chlorocarbons in the SDP influent stream will be small (<10 ppm level) because of the high destruction efficiency of the PBR with such compounds. Thus, the amount of HCl generated in the SDP will itself be small and can easily be removed by the soda lime and/or carbon traps before gas discharge through the Building 128 stack. Finally, the plasma discharge represents a weak source of UV radiation. The polycarbonate enclosure surrounding the cell prevents any of this radiation from escaping into the ACL.

V.3. Analytical Diagnostics

No apparent hazards are associated with operation of the various diagnostic equipment. All sample lines are connected directly to the instrumentation. A separate SOP for gas chromatograph operation is currently under review by HS Division personnel.

VI. Estimated Output from PBR/SDP System

For system operation at 1 kg-oil/hr (mixture comprised of 95% machining oil, 5% TCE) with 175% excess air (50% of LEL) at 1000°C, the following product amounts are anticipated.

Product		Volume	Production Rate (lbs/hr)
CO		<<1 ppm	6.5 (10^{-9})
CO_2		7.2%	3.14
O_2		8.3%	2.6
H_2O		7.5%	1.33
N_2		76.9%	21.2
HCl		447 ppm	0.016
NO_x	98.9% NO 1.1% NO_2	8.5 ppm	2.5 (10^{-4})
Ozone		~0.3%	0.14
TCE		<1 ppm	2.9 (10^{-7})

VII. WASTE PRODUCTION AND MANAGEMENT

As noted in Section V, the primary waste stream products are water, CO_2, CO, and HCl. At this time, HCL is considered to represent the major hazardous waste component produced in the process. The primary removal mechanism for (wet) HCl is via reaction with the alumina pellets in the PBR. The remaining fraction is captured in the liquid trap upstream of the SDP (dissolved in water) and the two traps downstream of the SDP. Periodically, the bed and trap material will have to be replenished with fresh material. The used material represents the primary source of hazardous waste in this effort. The collected liquid may under some circumstances be used for quantitative analysis of PBR effluent. If not used for this purpose it will be treated as a hazardous liquid waste.

Disposal of all hazardous waste will be done under the guidance of CLS-2's and/or CLS-6's hazardous waste coordinator The frequency of bed/trap cleaning and replenishment will be dependent upon several factors including length of system operation, quantity of material processed, etc.

In general, this project will adhere to the Waste Management Plan (Ch. VIII) and Waste Minimization Guidelines (Ch. XII, attachment VI) set forth in the Chemical and Laser Sciences Division ES&H Program Plan dated July 1991. A copy of this document is present in the ACL's ES&H station. Finally, personnel associated with this project will attend the Laboratory's Hazardous Waste Generator Training course.

VIII. GENERAL OPERATING PROCEDURES

VIII.a Packed Bed Reactor

With the fluid and oxidizer gas flow off, the fluid reservoir can be filled.

The electric furnace is turned on. Temperature of the furnace is controlled using a set-point controller.

When the PBR reaches the desired operating temperature(s) [small PBR has one zone, large PBR has three zones], the oxidizer gas is turned on and set to the desired flow rate.

The fluid reservoir flow valve is opened and the fluid flow adjusted to the desired value.

The oxidizer and fluid flow rates, the pressure and temperature distribution, and composition of the exhaust gas are monitored during the test. Adjustments to any of these parameters can be made as necessary to change operating conditions. The PBR effluent can be directed to the SDP or discharged through the exhaust stack.

Upon test completion, turn off the fluid flow. Continue to flow the oxidizer gas to react any remaining bed fluid.

Shut off oxidizer gas and either prepare for the next test or turn off the oven.

VIII.b Silent Discharge Plasma Cell

Ensure that the protective polycarbonate enclosure is in position around the cell.

Activate the high voltage power supply. The red warning light will come on automatically at this time.

Initiate gas flow. Gas may be supplied directly from the PBR or from prepared mixes. Monitor the effluent stream. Adjust cell power to maximize hydrocarbon and chlorocarbon destruction efficiency.

When a test is completed, shut off the gas flow and the high voltage power supply.

IX. SOP REVISION

This SOP will be revised and reviewed if it becomes apparent that a change in procedure is required, the experimental apparatus is significantly altered , or if it becomes necessary to change the input stream composition.

X. EMERGENCY PROCEDURES

X.1 General Emergency

1. In the event of any noted or suspected malfunction with the PBR or SDP, shut off all liquid and gas flows.
2. Deactivate the bed furnace and the SDP high voltage power supply.
3. Evaluate the situation. If a true emergency exists:
   a) Evacuate the laboratory.
   b) Call 911 and report emergency.
   c) Notify supervisor and group leader.

X.2 Thermal or Acid Burn

1. If possible, perform on-site first aid (i.e., treat injured area with cold water).
2. Transport the injured person to HS-2 for treatment.
3. Notify supervisor and group leader.

X.3 High Voltage Accident

In the event of a high voltage accident with the SDP:

1. Shut off main power breaker to SDP power supply.
2. If necessary, begin CPR.
3. Call 911 and report accident.
4. Notify supervisor and group leader.

X.4 Fire

In the event of a fire with the PBR:

1. Shut off gas and fluid flow.
2. Deactivate furnace
3. Evacuate the area.
4. Call 911 and report fire.
5. Notify supervisor and group leader and Building Manager.

X.5 Hazardous Gas Release

In the event of a release of hazardous gas in the ACL:

1 Evacuate the area immediately.
2. If possible shut down the PBR/SDP system.
3. Open all access doors to Building 128 and allow sufficient time for purging by outdoor air circulation.
4. If someone receives excessive exposure to the gas, or if it is a significant release, call 911 and notify the supervisor and group leader and Building Manager.
5. Repair the system.

Packed Bed Reactor - Silent Discharge Plasma System

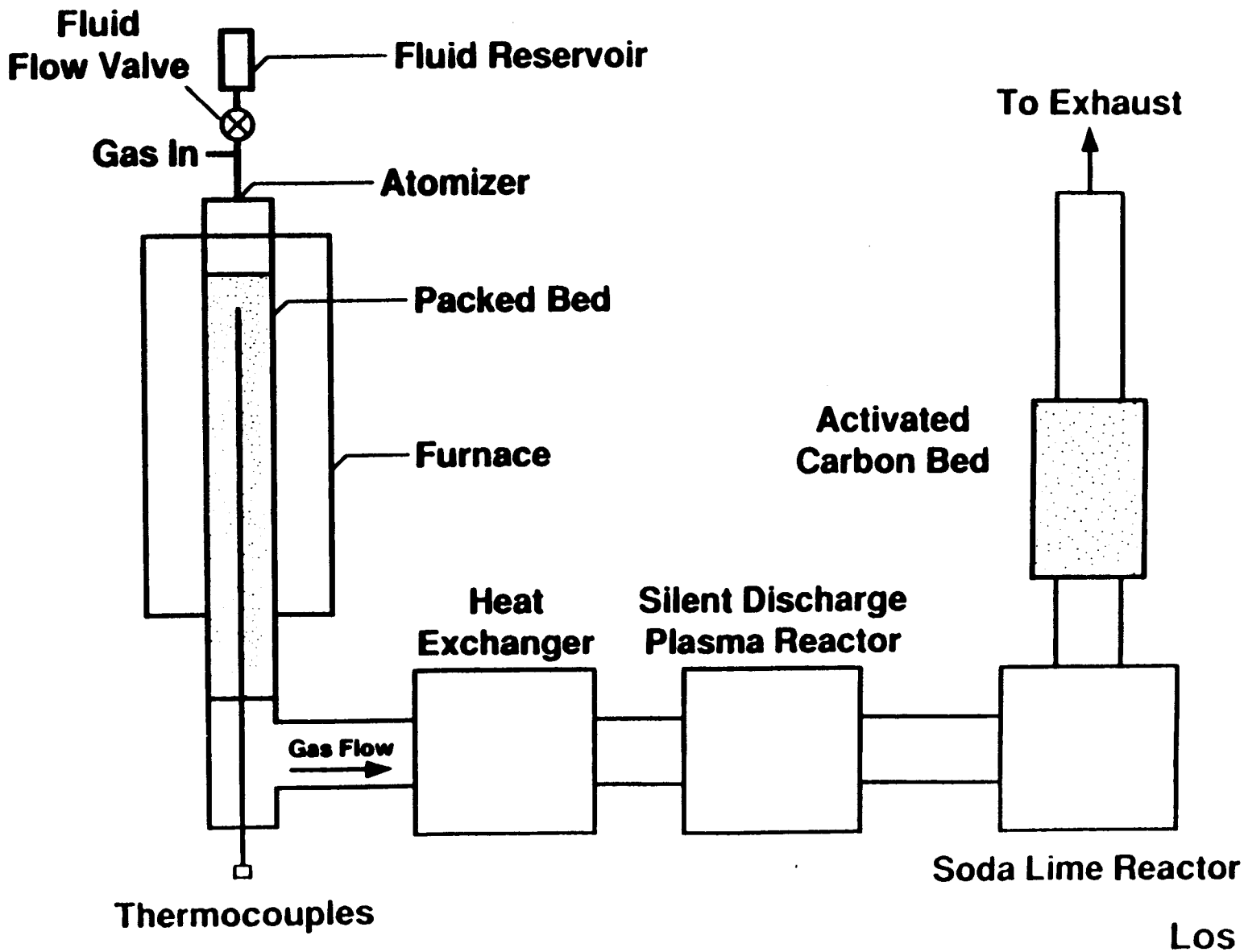

Los Alamos
CLS-91-2471

Revision 2
7/14/93

ATTACHMENT 5

UNIT-SPECIFIC INSPECTION FORM

Los Alamos National Laboratory

RD&D PERMIT

Inspection Sheet (page 1 of 2)

PACKED BED REACTOR/SILENT DISCHARGE PLASMA UNIT

PART I

Enter condition of item inspected (OK or AR*) in column for day inspected.

ITEM	INSPECTED FOR	SUN	MON	TUE	WED	THU	FRI	SAT
RD&D Unit Equipment	Properly functioning; signs of leaks or deterioration.							
RD&D Waste Container Storage Area	Deterioration and leaks; corrosion, damage; any leaks or rainwater in berm/pan; condition of berm/pan; all containers sealed closed. Ensure that only waste to be treated in the RD&D unit is stored in area.							
Labels	All waste storage containers inspected for hazardous waste labels identifying contents.							
Warning Signs	Check for "Authorized Personnel Access Only" signs at entry doors.							
Building Security	Condition of doors/locks.							
Aisle Space	Minimum of 2 feet of aisle space is maintained around RD&D hazardous waste container storage area and around the RD&D unit itself.							
Spill Control and Fire Emergency Equipment	Present and in good working order.							
DATE	Date of Inspection.							
TIME	Time of Inspection.							
INSPECTOR	Inspector Initials.							

PACKED BED REACTOR/SILENT DISCHARGE PLASMA UNIT

PART II

For any AR (Action Required) in PART I above, describe below: action required, action taken, date of action. Attach additional sheets if necessary. Inspectors must detail any deficiency noted above. Items to be included are: type of problem, any action taken, and the date/time of the action. Provide signature of individual performing inspection, daily date and time record was signed and completed.

INSPECTOR NAME and SIGNATURE	DATE and TIME	ACTION REQUIRED	ACTION TAKEN

Revision 2
7/14/93

ATTACHMENT 6

CONTINGENCY PLAN

Los Alamos National Laboratory

RD&D PERMIT

TABLE OF CONTENTS

Attachment Page

LIST OF ACRONYMS iii

1.0 INTRODUCTION 1
1.1 SITE DESCRIPTION 1
1.2 WASTES TESTED IN RD&D UNIT 1

2.0 EMERGENCY RESPONSE RESOURCES 2
2.1 EMERGENCY MANAGEMENT OFFICE 2
2.2 HEALTH AND SAFETY (HS) DIVISION RESPONSE GROUPS . . 3
2.3 ENVIRONMENTAL MANAGEMENT (EM) DIVISION RESPONSE GROUPS 5
2.4 OTHER LANL RESPONSE RESOURCES 5
2.5 CONTRACTED RESPONSE GROUPS 5
2.6 OUTSIDE RESPONSE AGENCIES 6

3.0 EMERGENCY EQUIPMENT AND COMMUNICATIONS 6
3.1 EMERGENCY CENTRAL ALARM SYSTEM 7
3.2 MAINTENANCE CENTRAL ALARM SYSTEM 7

4.0 CONTINGENCY PLAN IMPLEMENTATION 8
4.1 GUIDELINES FOR IMPLEMENTATION 8
4.2 EMERGENCY NOTIFICATION 9
4.3 EMERGENCY MANAGER ACTIONS 10

5.0 SPILLS 11
5.1 SPILL CONTROL PROCEDURES 12
5.2 DECONTAMINATION VERIFICATION 12

6.0 EXPLOSION 12

7.0 FIRE 13

8.0 EVACUATION 14
8.1 EMERGENCY PROCESS SHUTDOWN PRIOR TO EVACUATION . . 14
8.2 EVACUATION PLAN 14

9.0 SALVAGE AND CLEANUP 15

10.0 POST-EMERGENCY ASSESSMENT 15

11.0 EMERGENCY RESPONSE RECORDS AND REPORTS 16

12.0 CONTINGENCY PLAN AMENDMENT 16

13.0 REFERENCES 17

LIST OF TABLES

TABLE NUMBER	TITLE
1	Response Groups and Agencies Available to the Emergency Management Office for Guidance and/or Emergency Assistance
2	Emergency Management Office Emergency Managers

LIST OF FIGURES

FIGURE NUMBER	TITLE
1	EMERGENCY NOTIFICATION STRUCTURE
2	EMERGENCY FACILITIES

LIST OF ACRONYMS

ADO	Associate Director of Operations
CAS	Central Alarm Station
CFR	Code of Federal Regulations
DOE	U.S. Department of Energy
DOT	U.S. Department of Transportation
EM	LANL Environmental Management Division
EMO	Emergency Management Office
EOC	Emergency Operations Center
EPA	U.S. Environmental Protection Agency
ERC	Emergency Response Coordinator
ERP	LANL Emergency Response Plan
HAZMAT Team	Hazardous Materials Response Team
HE	High Explosive
HS	LANL Health and Safety Division
HWMR	State of New Mexico Hazardous Waste Management Regulations
ICG	Incident Control Group
JCI	Johnson Controls World Services, Inc.
LAAO	Los Alamos Area Office
LAFD	Los Alamos Fire Department
LAMC	Los Alamos Medical Center
LANL	Los Alamos National Laboratory
LAPD	Los Alamos Police Department
M	Dynamic Testing Division
MAT	Materials Management Division
NAWAS	National Warning System
NMED	New Mexico Environment Department
NMT	Nuclear Materials Technology
OSHA	Occupational Safety and Health Administration
PA	Public Address
PTLA	Protection Technology Los Alamos
RCRA	Resource Conservation and Recovery Act
REA	Radiological Emergency Assistance
SOP	Standard Operating Procedure
TA	Technical Area
TRU	Transuranic
TSDF	Treatment, Storage, and Disposal Facility
WX	Design Engineering Division

CONTINGENCY PLAN

PACKED-BED REACTOR/SILENT DISCHARGE PLASMA TREATMENT UNIT

RD&D PERMIT

1.0 INTRODUCTION

This document presents contingency measures for RD&D units at Los Alamos National Laboratory (LANL). This document is consistent with the LANL Emergency Response Plan (ERP), prepared by the Laboratory's Emergency Management Office (EMO). The ERP incorporates emergency planning and preparedness strategies from Department of Energy (DOE) Order 5500.3A, "Emergency Planning and Preparedness for Operational Emergencies." Although it is not anticipated that large scale emergencies will occur at the RD&D unit due to the small quantities of waste material at hand, a detailed description of emergency response capabilities and procedures is provided here. The provisions of this plan will, be carried out immediately whenever there is a fire, explosion, or release of hazardous waste at an RD&D unit that could threaten human health or the environment.

1.1 Site Description

LANL and the residential communities of Los Alamos and White Rock are located in north central New Mexico on the Pajarito Plateau, situated west of the Rio Grande on the eastern slopes of the Jemez Mountains. The LANL facility covers approximately 111 square kilometers (27,500 acres) in and adjacent to Los Alamos County, and includes 34 active Technical Areas (TAs).

The principal mission of LANL is the application of science and technology to solve national problems including weapons development, energy supply, and conservation programs, while basic scientific research complements and strengthens its fundamental technical capabilities. LANL is owned by the DOE, and co-operated by DOE and the University of California.

1.2 Wastes Tested in RD&D Unit

Wastes that will be managed in the RD&D treatment unit will be halogenated and non-halogenated organic hazardous liquid wastes. The maximum amount of waste that will be managed at the unit will be 165 gallons (or three 55-gallon containers). Containers of hazardous wastes will be placed in secondary containment to minimize hazards from leakage.

Selected waste streams to be tested in the RD&D unit are described below.

Waste Description	Hazardous Waste Code(s)
Oil with 1,1,1-Trichloroethane from cleaning and repairing of vacuum pumps.	F001
Lacquer thinner from cleaning road painting equipment	D001
Mixture of acetone/ethanol from degreasing oily parts	F003

2.0 EMERGENCY RESPONSE RESOURCES

The primary resources for management of emergency incidents at LANL reside within the Emergency Management Office (EMO), which is part of the Associate Director of Operations (ADO) Office. During an emergency situation, line management (i.e., the group leader of the affected area) works with the designated Emergency Manager from the EMO who assumes the primary responsibility for managing emergency response operations.

Outside of LANL, contracted services and other agencies are also available for assistance during emergencies. These include the contracted services of Protection Technology Los Alamos (PTLA) (security) and Johnson Controls World Services, Inc. (maintenance), the Los Alamos Fire Department and Police Department, and the Los Alamos Medical Center.

All response groups and agencies called upon during emergencies are coordinated by the designated Emergency Manager. The emergency notification procedure is illustrated on Figure 1. The responsibilities and/or assistance available form the response groups/agencies are listed in Table 1 and discussed briefly in the following sections.

2.1 Emergency Management Office

The Director of LANL has delegated the authority and responsibility for administering and implementing the Laboratory's emergency management program to the ADO. The EMO is included within the ADO office. The EMO coordinates and issues the Laboratory's Emergency Response Plan and provides response coordination for emergencies. The EMO also provides a 24-hour Emergency Manager to respond to emergencies, and an Emergency Response Coordinator (ERC) to coordinate Health and Safety and Environmental Management personnel and resources. Additionally, the EMO maintains the Emergency Operation Center (EOC) in a ready condition, should the center be required. The primary EOC is located at TA-59-1; an alternate EOC is located at TA-49-113.

An Emergency Manager and an ERC will respond to emergency incidents involving the release of waste to the environment,

including spills, fires, or explosions. The Emergency Manager will initially assess the possible hazards to human health or the environment, and use whatever response group(s) or emergency equipment needed to control and contain the waste. In the event of an emergency, the Emergency Manager becomes the Incident Commander with full responsibility for all response actions. At the scene of the emergency, an Incident Control Group (ICG) will form which consists of responding emergency personnel who report to the Incident Commander. The ICG works together to take command and control of emergency situations.

EMO personnel designated as Emergency Manager are listed in Table 2. Assignment as the designated Emergency Manager is rotated. The Emergency Manager can be reached by contacting the EMO (667-6211 during working hours, 667-7080 after working hours) or the central Alarm Station (CAS) dispatcher (9-911).

The ERC is called out by and reports to the Incident Commander. In the event of an emergency, the ERC is responsible for coordinating the Hazardous Materials Response (HAZMAT) Team, Radiological Emergency Assistance (REA) Team, and other related Health and Safety and Environmental Management personnel and resources.

2.2 Health and Safety (HS) Division Response Groups

LANL maintains its own response forces within the HS Division to handle emergencies. These response groups include:

- Health Physics Operations (HS-1);
- Occupational Medicine (HS-2);
- Risk Management Support (HS-3);
- Industrial Safety and Hygiene (HS-5); AND
- Health Physics Policy and Programs (HS-12).

Any of these groups may respond to an emergency, if requested by the ERC, and are coordinated by the ERC (through their team leader,if applicable) in the ICG.

2.2.1 Health Physics Operations (HS-1)

Radiological incidents that occur at any of the TAs are evaluated by HS-1, Health Physics Operations. HS-1 will provide field personnel to perform radiological monitoring and decontamination under the supervision of Certified Health Physicists.

2.2.2 Occupational Medicine (HS-2)

LANL maintains its own medical facility operated by HS-2, Occupational Medicine. This group provides appropriate medical treatment for occupationally-related illnesses and injuries and

monitors employees to assess the effectiveness of health protection programs. HS-2 maintains documented records of the health status of employees and related occupational medicine activities.

Although HS-2 is not involved with on-scene emergency response, they maintain a central medical facility with a fully-equipped emergency room and decontamination facilities at TA-3, SM-409. Additionally, this group staffs three satellite first-aid stations at TA-53, TA-16 (S-Site), and TA-55. The locations of these emergency facilities are shown on Figure 2. Medical staff includes physicians, physician's assistants, registered nurses, x-ray technicians, a physical therapist, a clinical psychologist, assistance counselors, and clinical laboratory technicians.

HS-2 is supported by the Industrial Safety and Hygiene Group's (HS-5) capabilities for exposure and treatment information via telephone access to the National Library of Medicine's TOXLINE and CHEMLINE; the Toxicity Databank files; POISONDEX and TOMESPLUS (Micromedics); and the CC/INFO database files on MSDSs, NIOSH Technical Information Center information, and the Registry of Toxic Effects of Chemical Substances. HS-2 maintains the TOMES system at the central medical facility (SM-409) to assist the clinical staff with timely exposure and treatment information.

2.2.3 Risk Management Support (HS-3)

HS-3, Risk Management Support, is responsible for coordinating and publishing policy and guidance on safety training and operational safety for LANL. Additionally, HS-3 provides guidance and assistance to LANL divisions for safety analysis documents and to LANL groups for facilities analysis.

2.2.4 Industrial Safety and Hygiene (HS-5)

Personnel from HS-5, Industrial Safety and Hygiene, comprise the LANL HAZMAT Team. The HAZMAT Team is responsible for the aggressive mitigation of chemical and hazardous waste emergencies, including field decontamination of victims and responders. LANL standards require that the HAZMAT Team meet the training criteria for emergency response personnel specified in 29 CFR 1910.120(q)(6)(iii), (iv), and (v). The HAZMAT Team is part of the ICG reporting through the ERC. HS-5 also provides site field testing to determine the nature and extent of chemical contamination, provides information on correct handling of chemicals, makes recommendations on protective clothing and equipment, and provides exposure and treatment information.

2.2.5 Health Physics Policy and Programs (HS-12)

The Radiological Emergency Assistance (REA) Section of the Health Physics Policy and Programs Group (HS-12) provides a wide-range of health and safety support for radiological incidents at LANL. The REA Team coordinates with the ERC to provide radiological

assessment and mitigation. This section also provides a contamination-control station at the scene of a radiological incident to process people working in a radiologically-contaminated area, and is capable of performing decontamination of personnel.

2.3 Environmental Management (EM) Division Response Groups

At the scene, the environmental Management groups are coordinated in the ICG by the ERC.

2.3.1 Waste Management (EM-7)

The Waste Management Group (EM-7) is responsible for initial response actions at RCRA TSDFs. This group also provides guidance on proper treatment, storage, and off-site shipment of hazardous waste.

2.3.2 Environmental Protection (EM-8)

The Environmental Protection Group (EM-8) is responsible for regulatory compliance and provides guidance on regulatory requirements to other groups. After an emergency, EM-8 provides field surveys of soil, water, air, and biota to determine environmental effects of exposure. The group provides expertise in hydrogeology and meteorology to establish near- and long-term environmental effects of emergency conditions.

2.4 Other LANL Response Resources

2.4.1 Nuclear Materials Technology (NMT)

Several personnel from the Nuclear Materials Technology (NMT) Division have been trained in emergency response procedures. In the case of an emergency interrupting operations, these personnel are responsible for monitoring for leaks, pressure buildup, gas generation, or equipment ruptures.

2.5 Contracted Response Groups

Contracted response groups report to the Operations Officer in the ICG or directly to the Incident Commander in the event of a smaller emergency.

2.5.1 Protection Technology Los Alamos (PTLA, Pro Force)

The Pro Force is responsible for LANL security, which is provided by Protection Technology Los Alamos (PTLA) under contract to LANL. During an emergency, the Pro Force activities include maintenance of security, direction of traffic within LANL, and control of access to the emergency scene. The Pro Force maintains the necessary equipment to perform these functions, such as crowd control equipment and patrol cars.

2.5.2 Johnson Controls World Service, Inc. (JCI)

Johnson Controls World Services, Inc. (JCI) provides a maintenance support force under contract to LANL. This support force is under LANL's direction in an emergency. JCI conducts inspections of LANL equipment, maintains equipment, and participates in post-emergency cleanup under the direction of HS-5.

2.6. Outside Response Agencies

Outside response agencies report to the Operations Officer in the ICG. In smaller emergencies, they may report directly to the Incident Commander.

2.6.1 Los Alamos Fire Department

The Los Alamos Fire Department (LAFD) provides fire protection and ambulance coverage for the communities of Los Alamos and White Rock and for LANL. In the case of an emergency within LANL, the Fire Department coordinates fire suppression efforts. LANL requires that Fire Department personnel meet the training criteria of emergency response personnel specified in 29 CFR 1910.120(q)(6)(i) and (ii).

2.6.2 Los Alamos Police Department

In keeping with the principle of handling emergencies internally, the Los Alamos Police Department (LAPD) has only minimal interaction with LANL in an emergency. That interaction is limited to traffic control on DOE roads with public access and to criminal investigations. The limits of interaction are included in a signed agreement.

2.6.3 Los Alamos Medical Center

Those medical cases which cannot be handled at HS-2 will be transferred to the Los Alamos Medical Center (LAMC), where LANL maintains a fully-equipped decontamination room adjacent to the emergency room. In the event that a case is sent to the hospital, support for the emergency room staff is provided by HS-2 medical personnel, HS-1 Health Physics Operations staff, HS-5 Industrial Safety and Hygiene staff, and HS-12 Health Physics Policy and Programs personnel. This assistance is coordinated through LANL's EMO.

3.0 EMERGENCY EQUIPMENT AND COMMUNICATIONS

Effective emergency response at LANL requires an efficient communication system which will integrate all personnel into the emergency response. The initial phase of an emergency will involve a small number of individuals at the affected area and notification of the designated Emergency Manager.

3.1 Emergency Central Alarm System

The emergency Central Alarm Station (CAS) is located at TA-64-1. This station is manned by Pro Force personnel 24-hours a day and is equipped with telephones, medium- and short-range radios, direct-line telephones, a National Warning System (NAWAS) station, and an emergency power system. The fire alarm board at the control room gives the location of automatic and pull fire alarms.

The emergency central alarm system is activated by:

- Telephone communication (9-911 or 911);
- Automatic fire alarms;
- Manual pull alarms;
- Computer interface (to warn of critical events at selected facilities);
- Break-in security; and
- Radio communications.

Activation of the emergency central alarm system automatically alerts the CAS dispatcher, the Pro Force,and the Los Alamos Fire Department. The required emergency response groups are then notified of the problem by the Emergency Manager, ERC, and/or the CAS dispatcher.

3.2 Maintenance Central Alarm System

The maintenance central alarm system is manned by JCI personnel 24 hours a day. The maintenance alarm system interfaces with computers which monitor sensitive equipment throughout LANL. Activation of an alarm triggers a call-out procedure to alert maintenance personnel and management supervision to correct the malfunction.

Internal communication systems at LANL include:

- Centrex telephone system;
- Medium-range radio nets (30-60 miles);
- Limited-range radio nets (3-10 miles);
- Telephone/radio paging; and
- Two-way hand-held radios.

Off-site communications with Federal, State, County, and other agencies are maintained by the following:

- Centrex telephone system;
- Private telephone lines (if Centrex fails);
- Medium-range radio nets (30-60 miles);
- Limited-range radio nets (3-10 miles);
- Two NAWAS; and
- KRSN radio link (local radio station).

The LANL EOC, located at TA-59-1 and maintained by the EMO, operates radio systems on key LANL and off-site channels. Emergency personnel responding to on-site incidents have the benefit of wide-area radio coverage using the EOC facilities. After hours, the Emergency Manager is responsible for activating whatever support personnel, services, or equipment is needed.

4.0 CONTINGENCY PLAN IMPLEMENTATION

The following section defines the guidelines used to initiate this Contingency Plan and the resulting actions taken.

4.1 Guidelines for Implementation

The decision to implement this Contingency Plan depends upon whether or not an imminent or actual incident involving a release of hazardous waste or hazardous materials to the environment could threaten human health or the environment. The following guidelines shall be used by the Emergency Manager in making the decision whether or not to implement this plan.

This Contingency Plan will be implemented in the following situations:

Spills

- A hazardous waste spill cannot be contained with application of absorbents;
- Precipitation threatens to move spilled material off-site;
- A hazardous waste spill caused the release of flammable materials, creating a fire or explosion hazard;
- A hazardous waste spill results in toxic fumes which threaten human health; or
- A earthquake or other natural disaster threatens containment integrity.

Explosions

- An unplanned explosion involving hazardous waste occurs; or
- An imminent danger exists that an explosion involving hazardous waste could occur.

Fires

- Any fire involving hazardous waste that cannot be controlled with fire extinguishers; or
- Any building, grass, forest, or nonhazardous waste fire that threatens to ignite hazardous material at the RD&D unit.

4.2 Emergency Notification

During working hours, immediately upon discovery of an imminent or actual incident involving hazardous waste at the RD&D unit, line management and the Emergency Management Office will be notified by on-site personnel. During nonworking hours, all incidents involving hazardous waste at the RD&D unit shall be reported to the designated Emergency Manager or the CAS dispatcher. In the case of fire involving hazardous waste at the RD&D unit, notification of these individuals is superseded by the LANL fire alarm system. A fire is reported by dialing 9-911, activation of automatic alarms, or activation of a fire pull box. All fire alarms alert the CAS Dispatcher, the Los Alamos Fire Department, and the PTLA Pro Force.

The first arriving emergency trained person becomes the temporary Incident Commander. Once the Emergency Management Office is notified of the emergency, the designated Emergency Manager shall proceed to the scene and be briefed by the temporary Incident Commander, building/area personnel, and other emergency units/teams. The Emergency Manager may then assume the position of Incident Commander. The Incident Commander may recommend activation of the EOC to the ADO. Upon concurrence of the ADO, the EOC will be activated and the necessary members of the Emergency Management Team are determined. The Incident Commander shall form an ICG and contact the ERC. The ERC will notify the appropriate emergency response groups. Table 1 describes the assistance available from each response group. The Incident Commander may use this list as criteria to determine which groups to contact in an emergency. Each response group maintains an on-call person and/or a call-down procedure to respond to emergencies.

4.3 Emergency Manager Actions

Upon notification of an incident, the Emergency Manager (Incident Commander) shall:

1. Proceed directly to the scene.

2. Call the ERC.

3. Assess the nature of the incident (e.g., through communication with the temporary Incident Commander).

4. Assume Incident Command.

5. In conjunction with the ERC, determine the quantities and types of hazardous waste involved.

6. Based on the guidelines in Section 4.1 of this plan, determine if implementation of this Contingency Plan is warranted.

7. Recommend activation of the EOC, if necessary.

Upon deciding to implement this Contingency Plan, the Incident Commander will perform the following additional response actions using the ERC, when appropriate:

1. Assess the hazards to human health and the environment including both direct and indirect effects, such as generation of toxic, irritating, or asphyxiating gases and/or hazards of runoff of water or chemicals used for fire suppression. An individual designated by the Emergency Manager will use the guidelines in Section 4.1 to assess the hazards to human health and the environment. If any of the criteria under Section 4.1 are met, evacuation of the immediate area will be initiated if the response group leader has not already accomplished evacuation of the area.

2. Determine if evacuation of the local area is advisable and, if so, immediately notify appropriate response groups and the LAPD.

3. Notify required response personnel and the DOE Los Alamos Area Office (LAAO) by phone, radio, or through the CAS Dispatcher. In the case of fire, the Emergency Manager shall confirm that the Fire Department Officer-in-Charge at the scene is aware of the special hazards associated with hazardous waste, and will assume Incident Command.

4. Warn the remaining on-scene and response personnel of imminent or actual hazards using the radio or the public address (PA) system.

5. In emergency situations, the activated EOC Crisis Manager (Laboratory Director of designee), through the Environmental Management representative, will notify the New Mexico Environment Department (NMED) at (505) 827-9329, and the National Response Center at (800) 424-8802, reporting:

   - Name and telephone number of the reporter;
   - Name and address of the facility;
   - Time and type of incident;
   - Name and quantity of material involved, to the extent known;
   - The extent of injuries, if any; and
   - The possible hazards to human health or the environment outside the facility.

6. Advise the response groups of hazards to minimize personnel exposure and expedite mitigation.

Once control of the emergency is established, the Incident Commander will delegate cleanup and decontamination responsibilities to the affected areas's line management. The responsibility group leader or group leader designee shall:

1. Arrange for site cleanup.
2. Provide for proper handling of recovered waste, contaminated soil, or contaminated surface/groundwater.
3. Provide for decontamination of equipment as needed.
4. Arrange for replacement and/or repair of equipment, as needed.
5. Ensure that testing is conducted to verify successful cleanup.

Within 15 days of the incident, DOE LAAO will submit the report described in Section 10.0 to the Environmental Protection Agency (EPA) Regional Administrator and the NMED.

5.0 SPILLS

Sudden releases include spills of hazardous waste which pose a significant threat to human health or the environment. Spill incidents resulting in a sudden release of hazardous waste to the environment which cannot be contained or which presents a threat to human health or the environment require implementation of this Contingency Plan.

The general steps in handling hazardous waste spills are:

- Containment, including spreading absorbents or forming temporary dikes;
- Waste pickup and packaging in sound containers; and
- Decontamination followed by testing to assure adequate cleanup.

The steps to be taken for spill mitigation will be determined by the Incident Commander with input from the ERC. If initial mitigation of the spill is necessary before the Emergency Manager arrives, a qualified member of the affected area's operating group will serve as the temporary Incident Commander.

5.1 Spill Control Procedures

Absorbent will be added to the waste spill during spill control.

5.2 Decontamination Verification

Decontamination will be accomplished at the spill site. After the spilled material has been absorbed, the material will be containerized. Because the floor of the RD&D unit is cement, water or an appropriate solvent will be used to clean the area and this liquid will be absorbed with universal sorbent and containerized.

A sample of unused decontamination water or solvent and absorbent material will be taken prior to the final washing to establish baseline data. A composite sample will then be taken of the material used to absorb the final waste water. No hazardous waste constituents should be present in this sample that were not present at similar levels in the unused decontamination water. If the sample exhibits any of the characteristics of a hazardous waste as defined in 40 CFR Part 261 Subpart C, or a hazardous constituent as listed in 40 CFR Part 261 Appendix VIII (and not detected in the unused decontamination water) is present above established health-based levels, the decontamination procedures will be repeated. An alternative demonstration of decontamination may be proposed and justified to the Secretary, NMED, who will evaluate the proposed alternative in accordance with the standards and guidance then if effect. If the proposed alternative is accepted, decontamination levels will meet the levels approved by the NMED. Each composite sample will be taken using a thief or trier as specified in EPA's SW-846, "Test Methods for Evaluating Solid Waste," Physical/chemical Methods, latest edition.

6.0 EXPLOSION

A sudden release caused by an explosion may result in a significant threat to human health or the environment.

Implementation of this Contingency Plan is required whenever a sudden release which cannot be contained or which presents a threat to human health or the environment occurs as a result of an explosion.

In the case of explosions, all personnel will immediately evacuate the area. Any injured personnel will be decontaminated in the field, if required and if time allows, and transported by LAFD ambulance to an HS-2 facility of LAMC for treatment. If an injury is severe and requires immediate medical evacuation, the injured person will be wrapped to contain contamination. The Emergency Management Office must be contacted immediately upon activation of the emergency central alarm system, and then the Emergency Manager will ensure that all necessary emergency response personnel are alerted. The LAFD is notified automatically upon central alarm system activation. The Emergency manager assumes Incident Control and will remain near the site, but at a safe distance, to inform the personnel responding to the explosion of the known hazards.

Upon arrival at the scene, the LAFD Senior Officer will evaluate information provided by the group leader, other site personnel, other members of the ICG, and Incident Commander to select the appropriate fire-fighting methods and tactics. The LAFD Senior Officer will direct fire fighting operations under the general direction of the Incident Commander.

7.0 FIRE

Fires may result in a sudden release of hazardous waste that poses a significant threat to human health or the environment. Implementation of this Contingency Plan is required whenever a fire incident results in a sudden release of hazardous waste which cannot be contained or which presents a threat to human health or the environment.

Depending on the size of the fire, portable fire extinguishers may be used. However, LANL policy discourages the use of portable fire extinguishers by employees and encourages immediate evacuation of the area and notification of the Los Alamos Fire Department. The Emergency Manager will alert all necessary emergency response personnel. The Fire Department is automatically alerted when the emergency central alarm system is activated. If the fire spreads or increases in intensity, all personnel should evacuate to an area designated by the responsible group leader or Emergency Manager. The Emergency Manager assumes Incident Command and should remain near the scene to advise the personnel responding to the fire of the known hazards. The Emergency Manager is familiar with spill response and emergency actions and, therefore, is qualified to advise fire-fighting personnel of the potential hazards involved.

Upon arrival at the scene, the LAFD Senior Officer will evaluate information provided by the group leader, other site personnel,

other members of the ICG, and Incident Commander to select the appropriate fire-fighting methods and tactics. The LAFD Senior Officer will direct fire-fighting operations under the general direction of the Incident Commander.

8.0 EVACUATION

A facility will be evacuated upon the voice command to evacuate the area, or upon the sounding of the evacuation alarm or the fire alarm.

8.1 Emergency Process Shutdown Prior to Evacuation

Personnel are instructed to shut down equipment prior to evacuating a building unless an immediate building evacuation is announced or signaled.

8.2 Evacuation Plan

Emergency situations may warrant the shutdown and evacuation of an area(s) or building(s) in order to protect personnel and property, to anticipate the emergency condition, or to enhance the appropriate response.

To initiate building evacuation, the evacuation or fire alarm is sounded and/or the public address system is used. The evacuation alarm cannot be silenced or reset by site personnel. The Fire Alarm Maintenance Section at 667-4027 and the LAFD Platoon Chief at 667-7026 can silence and reset the alarm.

To evacuate a portion of a building, the PA system is more appropriate. The PA system will notify the occupants of the area to be evacuated and, additionally, will advise personnel in the rest of the facility of the existence of a problem in that specific area.

The PA system, fire alarm, or evacuation alarm may be used to initiate an evacuation. Once evacuation has been initiated, personnel are to turn off all equipment, if conditions allow, that could contribute to the hazard if left unattended. Personnel should then leave the affected area and go to the muster area.

In the event of an evacuation of only a portion of the building, the responsible group leader will designate a control point at the closest safe location (e.g., considering wind direction). This area will be outside the affected area and will serve as a muster point where the group leader or his designee can oversee evacuation operations and work to prevent further spread of the hazard.

For a small-scale evacuation, a responsible on-site person may direct evacuation. For a large-scale evacuation, the emergency central alarm system may be activated, the EMO will be notified

and, until the Emergency Manager arrives at the scene to assume responsibility for the evacuation, a responsible on-site person may begin the evacuation process.

9.0 SALVAGE AND CLEANUP

The affected area will be surveyed by appropriate representatives from the HS and EM Groups before salvage, cleanup, and return to normal operations. Visual inspections of the affected area will be supplemented by sampling to determine whether cleanup is complete. After determination of any existing hazards from toxic or hazardous gases or fumes, electrical hazards, radiological hazards, or other unsafe conditions, personnel, or selected team will reenter the area to perform designated contamination tasks, repairs, and salvage to allow the return to normal operations. After an emergency, the Incident Commander will turn the operation over to line management, who will:

- Provide for proper handling of recovered waste, contaminated soil or surface water, or any other material that results from a release, fire, or explosion;
- Arrange for site cleanup procedures to be completed; and
- Ensure that emergency equipment is cleaned, decontaminated, and fit for its intended use before operations are resumed.

Damage assessment, recovery, and reporting shall be performed within the requirements of DOE Order 5000.3A, as referenced by DOE Order 5500.3A (Emergency Planning and Preparedness for Operational Emergencies). The Incident Commander assumes the coordination of post-emergency actions, particularly during the time period immediately after the emergency. Such actions include cleanup operations, repair of vital equipment, or interim hazard-removing operations (such as demolition of unstable walls). The services of the affected operational organizations, HS and EM Divisions, JCI, and other on-site resources will also be utilized to estimate cleanup costs and operational impact.

10.0 POST-EMERGENCY ASSESSMENT

When the emergency is over, the cause of the emergency and the effectiveness of the response are investigated, in order that future emergencies may either be prevented, or that the response to them may be more effective. Following each event requiring the implementation of this Contingency Plan, the Emergency Manager will schedule and conduct a critique with representatives of all responding groups, building/area representatives, and LANL management to determine the adequacy of the response.

11.0 EMERGENCY RESPONSE RECORDS AND REPORTS

The details of any incident that requires implementation of this Contingency Plan must be recorded by the responsible group or section leader for the RD&D unit. This Incident Report must include the time, date, and full description of the incident.

Any emergency that requires implementation of this Contingency Plan will be reported in writing within 15 days to the NMED. The report, submitted DOE LAAO, shall include the following data:

- Name, address, and phone number of owner or operator;
- Name, address, and phone number of the facility;
- Date, time, and type of incident (e.g., fire, explosion, spill);
- Name of material involved;
- Quantity of material involved;
- Extent of injuries (if any);
- Assessment of actual or potential hazards to human health or the environment; and
- Estimated quantity and disposition of material recovered from the incident.

12.0 CONTINGENCY PLAN AMENDMENT

This Contingency Plan will be reviewed by the EMO, EM-7, EM-8, and by HS-5 and HS-12, if necessary, and will be immediately amended if determined to be inadequate to handle spills, explosions, fires and whenever:

- The facility permit is revised;
- There is significant change in the design or operation of the facility (i.e., waste quantities handled and handling techniques);
- The list of Emergency Managers changes;
- Operating experience or technical review demonstrates that the plan is inappropriate.
- Actual implementation of the plan demonstrates inadequacies.

TABLE 1
RESPONSE GROUPS AND AGENCIES AVAILABLE TO THE EMERGENCY MANAGEMENT OFFICE FOR GUIDANCE AND/OR EMERGENCY ASSISTANCE

LABORATORY CONTROLLED RESPONSE GROUP	TELEPHONE	RESPONSIBILITIES
HS-1, Health Physics Operations	667-5296	Radiological monitoring and decontamination.
HS-2, Occupational Medicine	667-7251	Emergency medical treatment.
HS-3, Risk Management Support	667-3363	Provides personnel to perform risk analyses. Provides guidance on operational safety.
HS-5, Industrial Hygiene and Safety	665-4427	Site evaluation - field testing to determine the nature and extent of contamination (nonradiological). Specify protective clothing and equipment. Provide HAZMAT Team.
HS-12, Health Physics Policy and Programs	667-5296	Provide support for radiological incidents, provide REA Team capable of performing radiological assessments and personnel decontamination. Maintain radiological emergency preparedness for the Laboratory.
EM-7, Waste Management	667-5839	Provide guidance on proper treatment, storage, and off-site shipment of mixed waste.
EM-8, Environmental Protection	667-5021	Field surveys to determine spread of contamination and adequacy of cleanup.
EM-9, Environmental Chemistry	667-3269	Chemical/radiological analytical services.

TABLE 1
(Continued
RESPONSE GROUPS AND AGENCIES AVAILABLE TO THE EMERGENCY MANAGEMENT OFFICE FOR GUIDANCE AND/OR EMERGENCY ASSISTANCE

LABORATORY CONTROLLED RESPONSE GROUP	TELEPHONE	RESPONSIBILITIES
NMT, Nuclear Materials Technology	667-2556	Monitor for leaks, pressure buildup, gas generation, or equipment ruptures in the event of interruption of operations at TA-55 due to an emergency.
Protection Technology Los Alamos Protective Force (Pro Force)	667-4437	Traffic control, security.
Johnson Controls World Services, Inc.	667-6191	Maintenance personnel and equipment, assist in waste cleanup under HS-5 guidance.
NON-LABORATORY CONTROLLED RESPONSE GROUP	**TELEPHONE**	**RESPONSIBILITIES**
Los Alamo Fire Department	9-911	Firefighting personnel and equipment.
Los Alamos Police Department	9-911	Traffic control of DOE roads with public access.
Los Alamos Medical Center*	662-4201 or 911	Medical services.

* Medical services related to hazardous and mixed waste injuries provided under the direction of HS-2.

TABLE 2
EMERGENCY MANAGEMENT OFFICE EMERGENCY MANAGERS*

EMERGENCY MANAGERS	LABORATORY TELEPHONE	HOME TELEPHONE	HOME ADDRESS
James S. Griffiths	7-6211	662-9155	190 Manhattan Loop, Los Alamos, NM
Gary W. Bequette	7-6211	662-4554	2369-B 33rd Street, Los Alamos, NM
Frank G. Pearce	7-6211	984-8901	110 Delgado Street, Los Alamos, NM
Deanna M. Seitz	7-6211	662-7356	65 San Juan, Los Alamos, NM
James A. Walton	7-6211	455-3316	Route 11, Box 20, Space 19, Santa Fe, NM

* To ensure immediate response, the Emergency Manager may be reached at the Emergency Management Office, 667-6211 or, after hours, 667-7080.

13.0 REFERENCES

Benchmark Environmental Corporation, 1990, "TA-54 Muster Stations," prepared for Los Alamos National Laboratory, November 1990.

Los Alamos National Laboratory, "RCRA Interim Status Contingency Plan for Mixed Waste Units," Los Alamos, New Mexico, May 1992.

Los Alamos National Laboratory, Emergency Management Office, "Emergency Response Plan," Los Alamos, New Mexico, September 1991.

Los Alamos National Laboratory, Attachment D (Contingency Plan) to RCRA Operating Permit, issued by New Mexico Health and Environment Department, November 8, 1989.

U.S. Department of Energy, 1990, "Emergency Planning and Preparedness for Operational Emergencies," DOE Order 5500.3A, Washington, D.C.

U.S. Department of Energy, 1990, "Spill Prevention, Control, and Countermeasure Plan for the Los Alamos National Laboratory," Revision 2.

U.S. Department of Energy, 1988, "Radioactive Waste Management," DOE Order 5820.2A, Washington, D.C.

U.S. EPA, 1990, "Hazardous Waste Operations and Emergency Response," U.S. Environmental Protection Agency, 29 CFR Part 1910.120.

U.S. EPA, 1990, "Interim Status Standards For Owners and Operators of Hazardous Waste Treatment, Storage, and Disposal Facilities," U.S. Environmental Protection Agency, 40 CFR Part 265.

U.S. EPA, 1986, "Test Methods for Evaluating Solid Waste," Laboratory Manual Physical/Chemical Methods, Volumes 1A-1C, EPA-SW-846, U.S. Government Printing Office.

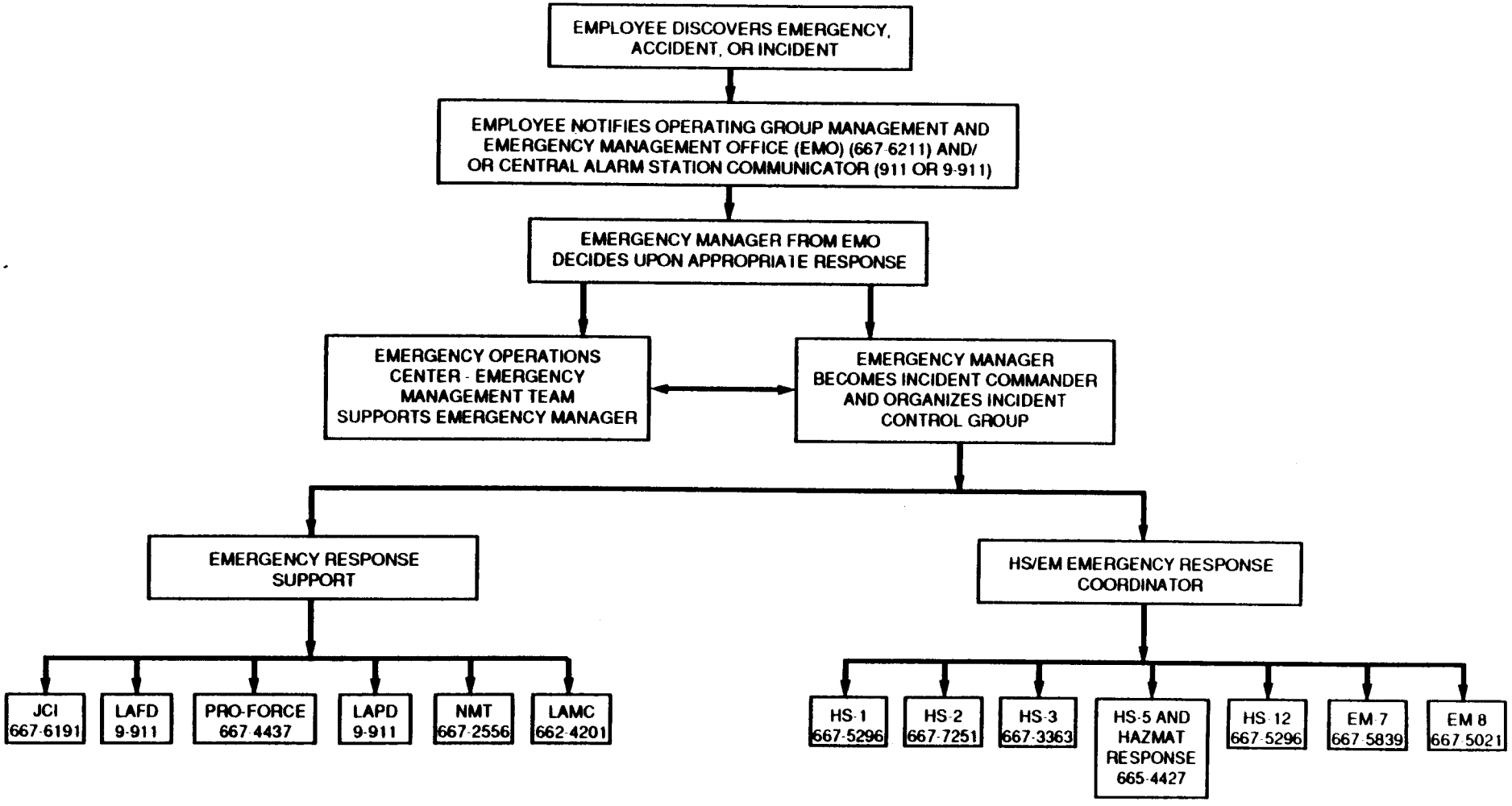

Figure I Waste Emergency Notification Structure.

Revision 2
7/14/93

ATTACHMENT 7

QUALIFICATIONS OF PRINCIPAL INVESTIGATOR

Los Alamos National Laboratory

RD&D PERMIT

Louis A. Rosocha

CLS-6, Advanced Laser and Systems Technology Group, Chemical & Laser Sciences Division
Los Alamos National Laboratory

BIRTH

Harrison, Arkansas	February 7, 1950

EDUCATION

BS (Physics)	University of Arkansas, Fayetteville	1972
MS (Physics)	University of Wisconsin, Madison	1975
PhD (Physics)	University of Wisconsin, Madison	1979

EMPLOYMENT HISTORY

Los Alamos National Laboratory

Deputy Group Leader, Pulsed Power Systems Group, CLS-7 now Advanced Laser & Systems Technology Group, CLS-6	1987-present
Project Manager, Aurora KrF/ICF Laser System	1984-1989
Amplifier System Manager, Aurora KrF Laser	1983-1984
Staff Member, Antares CO_2/ICF laser project and Aurora KrF laser project.	1981-1983

National Research Group, Inc., Madison, WI

Vice-President for R&D and Staff Scientist	1975-1981

PROFESSIONAL ASSOCIATIONS

American Physical Society
International Ozone Association
Sigma Pi Sigma

PROFESSIONAL EXPERIENCE

Dissertation research involved experimental and theoretical investigations of plasma chemistry in transient electrical discharges in oxygen, the associated production of ozone, and the application of relativistic electron beam physics and pulsed power technology to the excitation of proposed liquid excimer lasers.

Fifteen years of working experience in experimental and applied physics, plasma chemistry, pulsed power, and technical management. In private industry, major work focus was on research, development, and manufacturing related to pulsed UV and dye lasers, high voltage switches, and ozone generators. At Los Alamos, focus was on pulsed power, electron beams, and amplifier technology for high energy (kJ-class) CO2 and KrF lasers for ICF. Served as project manager for the overall design, construction, and testing of a multi-kilojoule angular-multiplexed KrF/ICF laser system prototype. Responsible for advanced electron-beam pumping technology development for large KrF/ICF lasers. Present research emphasis is in the applications of pulsed power, electrical discharge plasmas, and relativistic electron beams to waste treatment and chemical synthesis.

Revision 2
7/14/93

ATTACHMENT 8

TRAINING COURSE SUMMARIES AND PERSONNEL TRAINING RECORDS

Los Alamos National Laboratory

RD&D PERMIT

Subject: General Employee Training (GET)

Relevant Compliance Requirements	DOE 5480.10, DOE 5480.11, DOE 5480.20, and LP 106-01.0
Description	GET consists of the following fifteen training modules. Facilities (5974) Policies (5975) Quality Assurance (5976) Security (5977) Safeguard Awareness (5711) ES&H Policy (5542) Employee Participation Packet (4459) OSHA Rights and Regulations (5543) Industrial Safety (5540) Fire Protection (5224) Emergency Management (5544) Industrial Hygiene (5545) Occupational Medicine (5546) Radiation Protection for the Occupational Worker (5547) Lockout/Tagout (5541) Environment (5548)
Audience	All new employees, contractors, affiliates, long-term visitors, and co-op students.
Prerequisites	None
Retraining	Radiation Protection for the Occupational Worker (5547): every two years OSHA Rights and Regulations (5543): yearly Lockout/Tagout (5541): every two years
Length	8 hours
Frequency	Every Monday and Tuesday as part of the hiring process
Contact	HS-3, 7-0059, K479

Subject: **Health**
Course: **Introduction to Hazard Communication**

Course Number: 2398

Relevant Compliance Requirements	ARs 1-4, 1-9, 2-1, 6-1, 6-2, 6-3, 6-4, 6-5, 6-6, 6-7, 6-8, 6-9, 8-1, 8-3, and 12-1
Description	Provides information about requirements of the Hazard Communication Standard and its application at the Laboratory; includes detailed discussion of employee's right to know, labeling requirements, and Material Safety Data Sheets (MSDSs) and the general principles of hazard recognition, evaluation, and control.
Audience	Required for all new and transferred employees and visitors who work directly with chemicals or who may be routinely exposed to chemicals during the course of their normal work activities.
Prerequisites	None
Retraining	None
Length	2 hours
Frequency	Weekly
Contact	HS-3, 7-0059, K494

Subject: **Environment** Course Number: 4465

Course: **Hazardous Waste Operations: Occasional Site Worker (24 hr)**

Relevant Compliance Requirements	29 CFR 1910.120
Description	Meets OSHA training requirements as described in 29 CFR 1910.120. Topics include regulations, rights and responsibilities of workers, nature of hazards, toxicology, industrial hygiene, monitoring methods and equipment, hazard evaluation, storage, handling and labeling, personal protective equipment, engineering controls, decontamination, and emergency response plans. One additional day of field experience under a trained, experienced supervisor is required to complete the training.
Audience	Required for workers who are on the site of a treatment, storage, and disposal (TSD) facility or a solid waste management unit (SWMU) only occasionally for a specific limited task (such as, but not limited to, groundwater monitoring, land surveying, and geophysical surveying) and who are unlikely to be exposed to hazard levels over permissible exposure limits and published exposure limits.
Prerequisite	None
Retraining	8 hours once a year; see Hazardous Waste Operations Refresher (Course 4466)
Length	24 hours
Frequency	As needed
Contact	HS-3, 7-0059, MS K479

Subject: **Environment** Course Number: 4466

Course: **Hazardous Waste Operations: Refresher**

Relevant Compliance Requirements	None
Description	Meets annual refresher training requirements for anyone who has completed 24- or 40-hour OSHA training as described in 29 CFR 1910.120. Topics include a review of regulations, toxicology, industrial hygiene, monitoring and sampling, and personal protective equipment.
Audience	Required for all employees and supervisors who have taken the Hazardous Waste Operations courses for Occasional or General Site Workers.
Prerequisite	Hazardous Waste Operations: Occasional Site Worker (24 hr, Course 4465) or Hazardous Waste Operations: General Site Worker (40 hr, Course 4464)
Retraining	Yearly
Length	8 hours
Frequency	As needed
Contact	HS-3, 7-0059, MS K479

Revision 1
6/24/93

FIGURE 2

RD&D Unit Key Map

FIGURE 3

Location Map

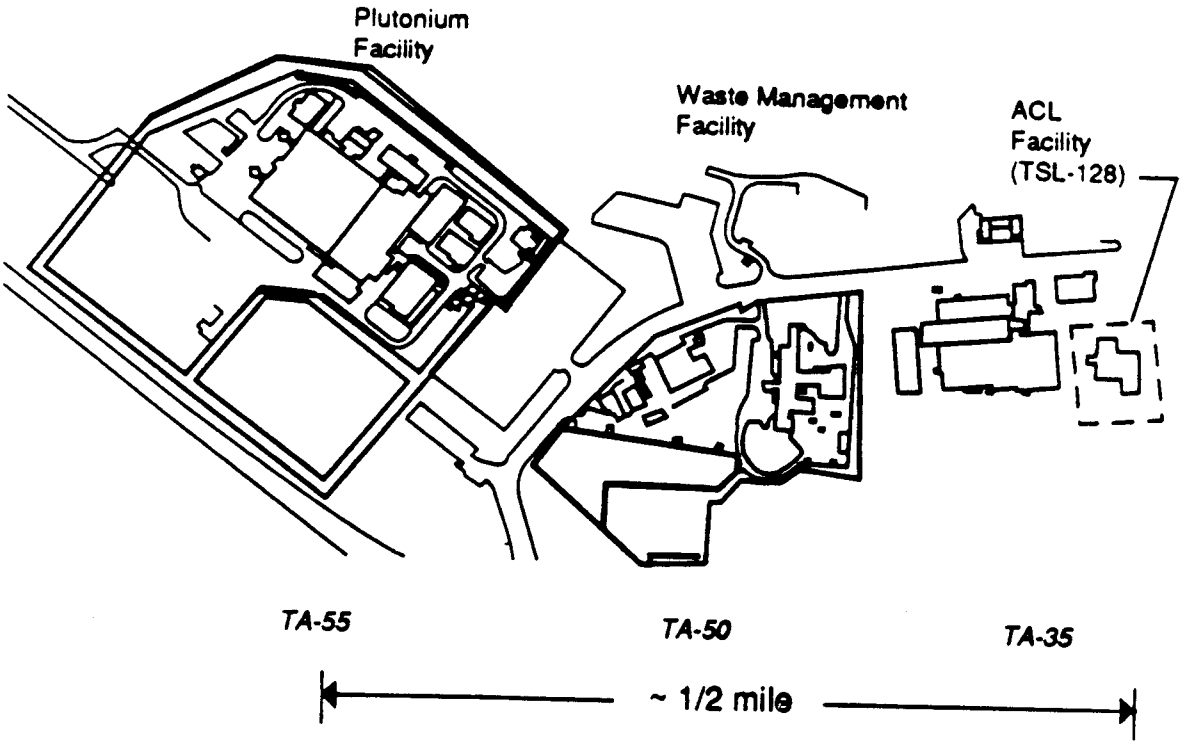

FIGURE 4

Layout of Building 128

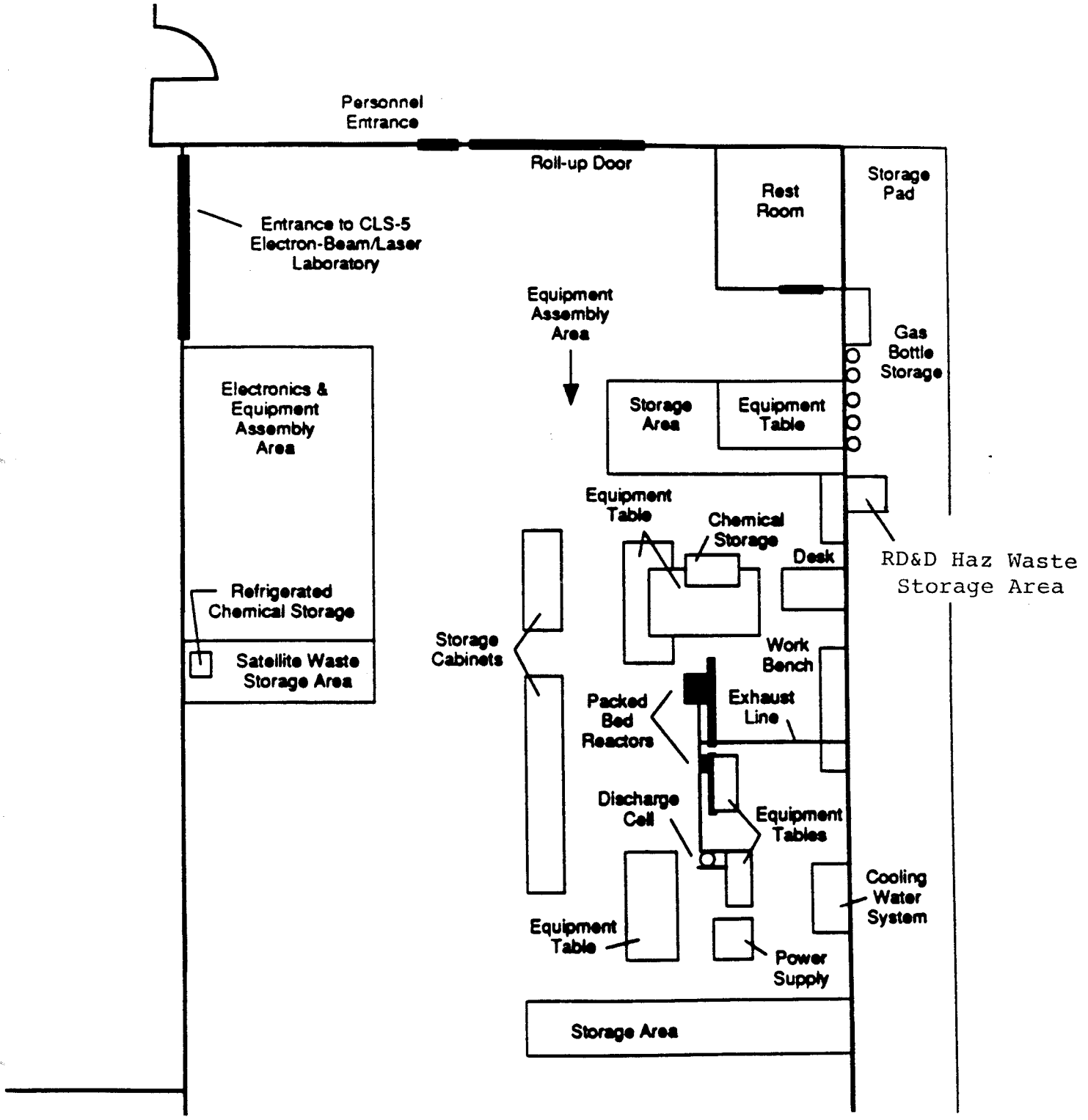

Revision 1
6/24/93

FIGURE 6

LOCATION OF RD&D UNITS RELATIVE TO NEARBY FAULT TRACES

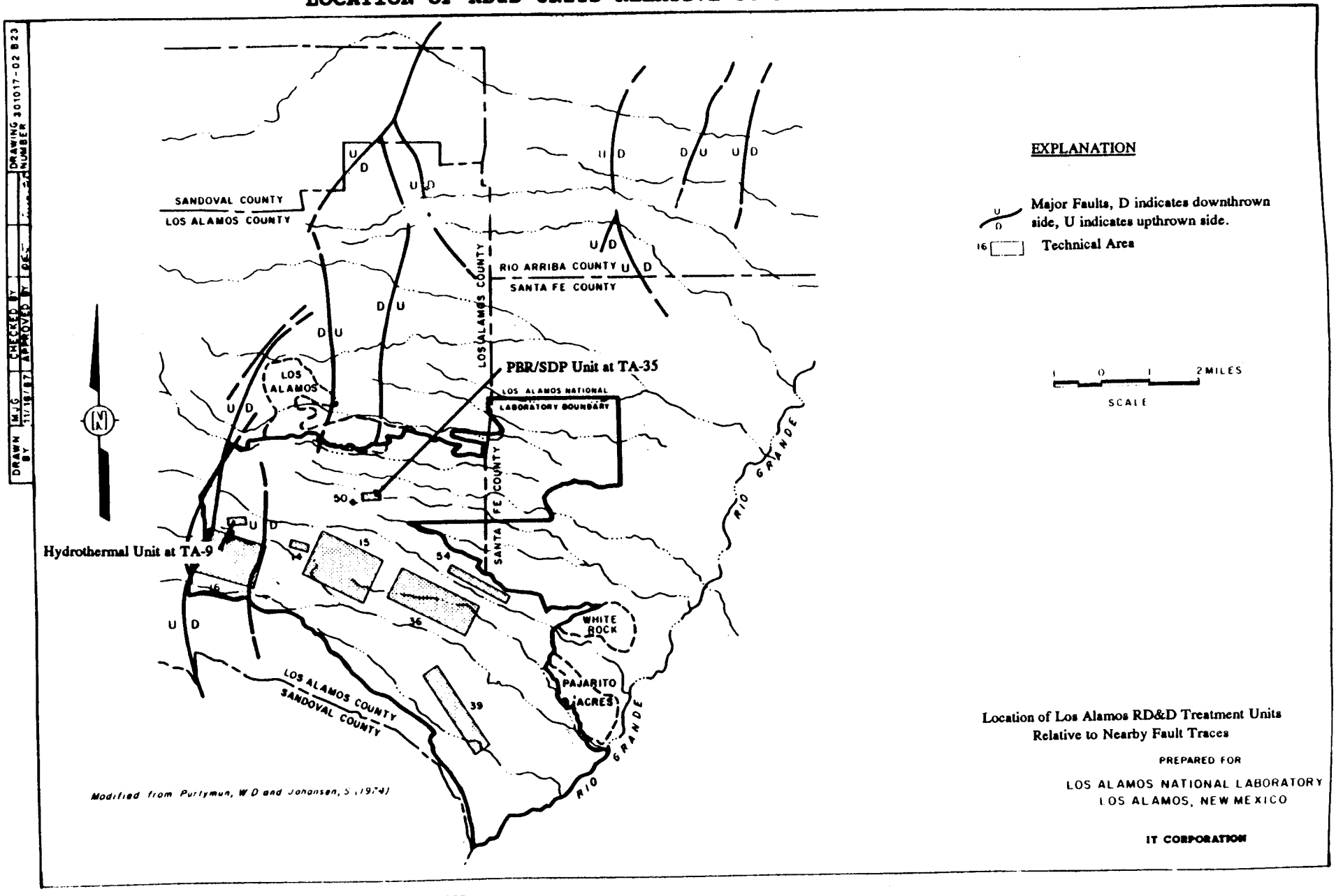

Source: Los Alamos National Lab, Part B Permit Application, 1988

FIGURE 7

Packed-Bed Reactor

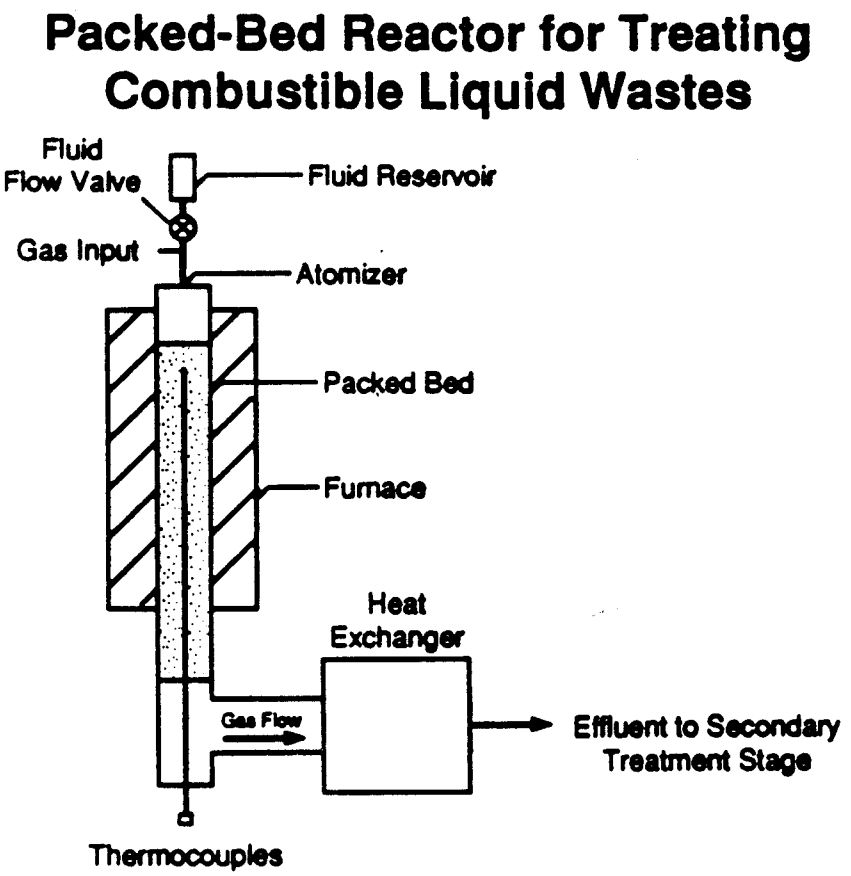

FIGURE 8

Cross-Section of Silent Discharge Plasma Unit

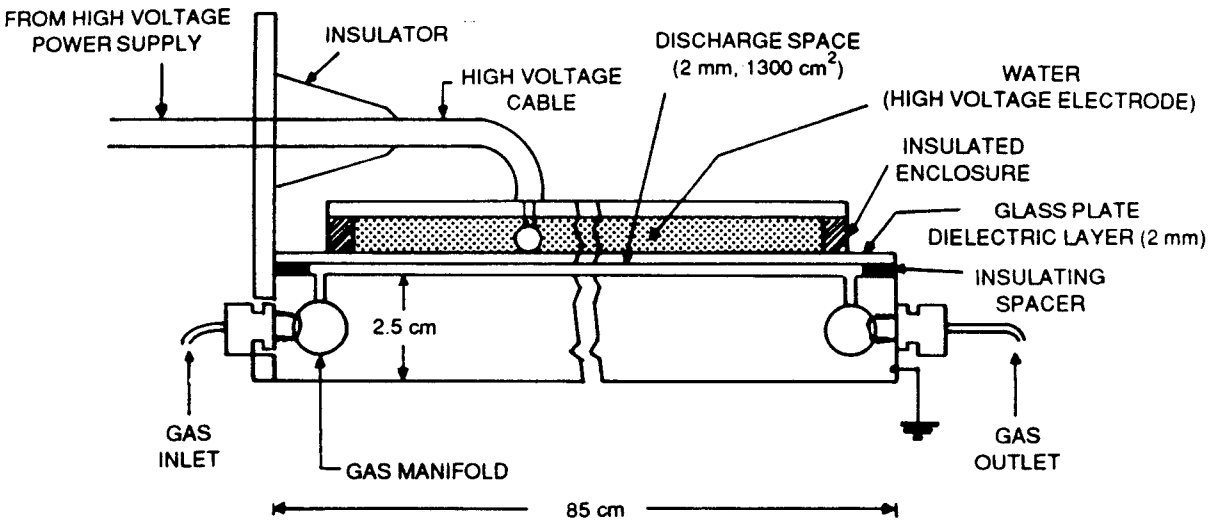

FIGURE 9

Revision 1
6/24/93

Packed-Bed Reactor/Silent Discharge Plasma RD&D Unit: Open-Loop Configuration

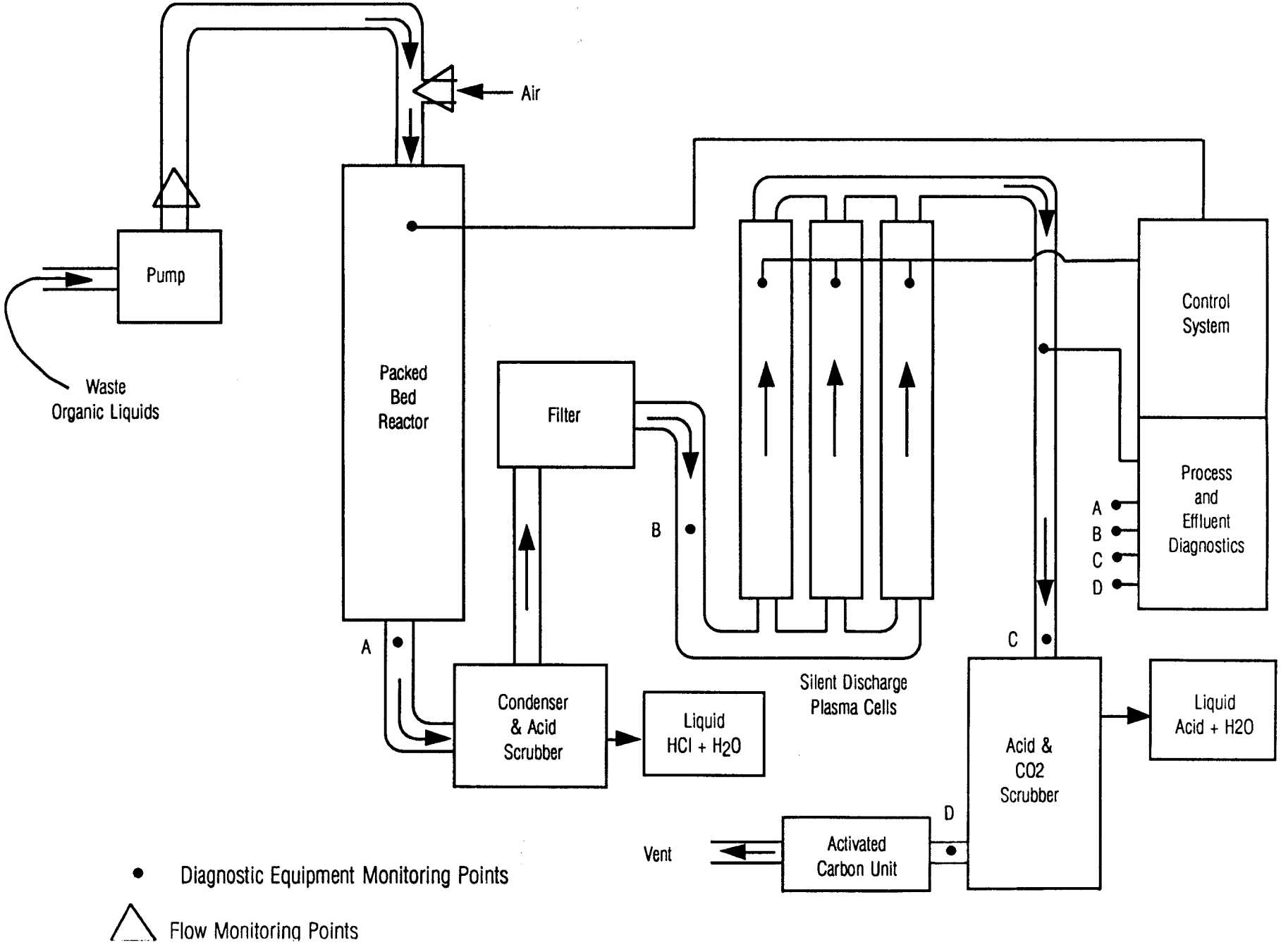

FIGURE 10

Revision 1
6/24/93

Packed-Bed Reactor/Silent Discharge Plasma RD&D Unit: Closed-Loop Configuration

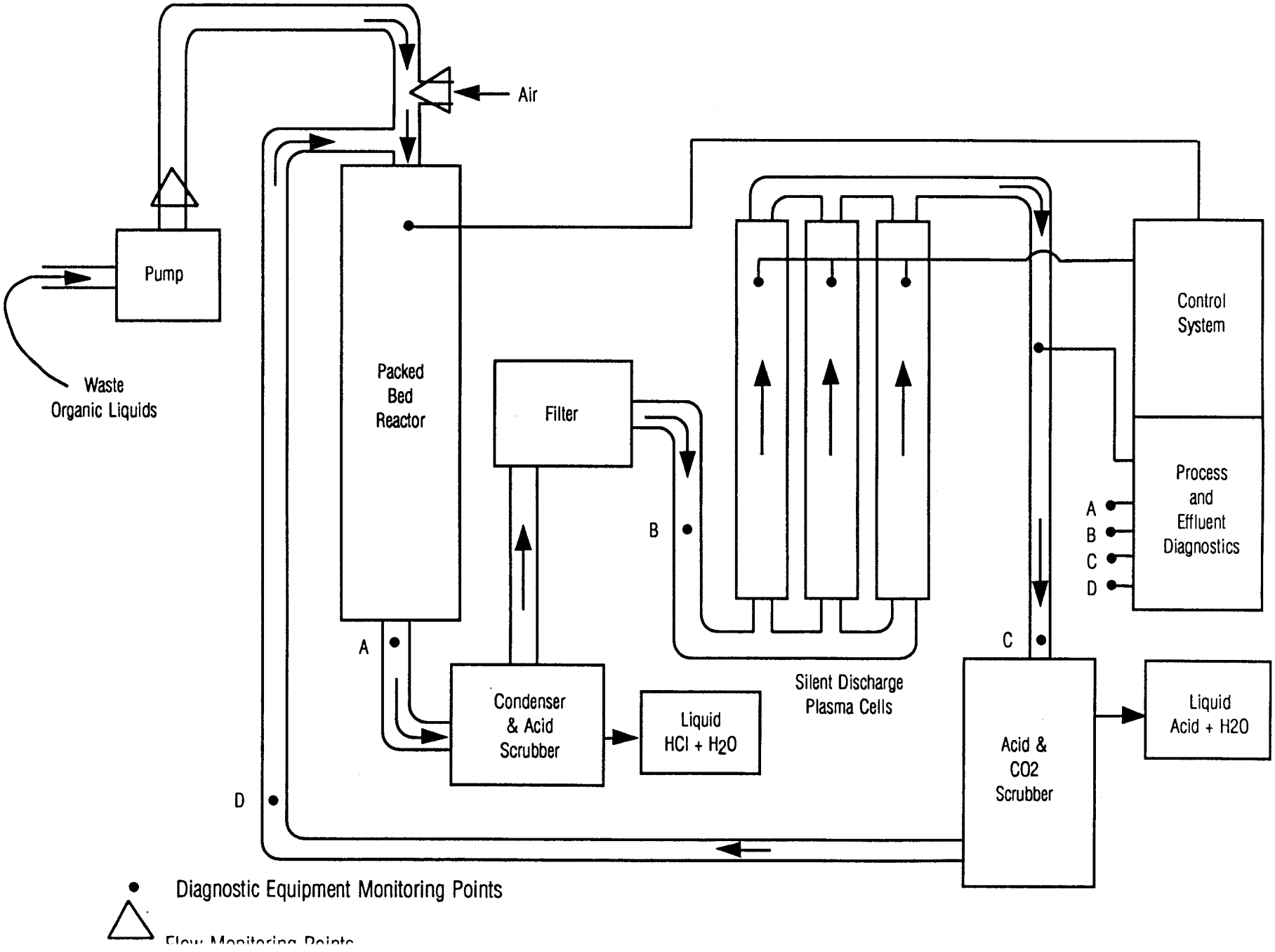

RESPONSE TO NOTICE OF DEFICIENCY

Los Alamos National Laboratory
Research, Development and Demonstration (RD&D) Permit Application
Packed Bed Reactor/Silent Discharge Plasma (PBR/SDP) Unit

The following information is provided in response to the Notice of Deficiency (NOD) issued to LANL on May 10, 1993 by the State of New Mexico Environment Department (NMED) for the RD&D permit application dated December 1992. Additional information provided here in response to NOD comments has been incorporated into a revised permit application dated June 24, 1993.

1. **LANL Application Section 2.9: General Facility Information [HWMR-7 Part IX; 40 CFR 270.14(b)(19)].**

   LANL must provide a topographic map showing a distance of 1000 feet around the facility at a scale of 2.5 centimeters (1 inch) equal to not more that 61.1 meters (200 feet). Contours must be shown on the map. The contour interval must be sufficient to clearly indicate the pattern of surface water flow in the vicinity of the facility.

   The presence of any Holocene faults within 61.1 meters must also be shown on the map to meet the requirements of HWMR-7, Part IX, and 40 CFR 264.18(a).

   Response: Building 128 at TA-35 is located at latitude 35.8624 and longitude -106.2945. A topographic map covering the RD&D unit location has been developed and included in the revised permit application as Figure 5. The topographic map has been prepared at a scale of 1 inch equal to 200 feet and with contour intervals of 2 feet. The map shows a 1000 foot radius around the RD&D unit. Additionally, the nearest seismic fault lines have been superimposed on the topographic map to show that the unit is not located near any fault traces. Additionally, Figure 2 (RD&D Unit Key Map) is a new drawing provided to show the location of TA-35 relative to other areas, including TA-9. Another RD&D permit application has been submitted for a research unit located at TA-9.

   The RD&D unit is located in Los Alamos County, New Mexico, which is listed in 40 CFR Part 264 Appendix VI. The seismicity of LANL is discussed in detail in the Part B Application submitted to acquire the existing facility-wide

RESPONSE TO NOTICE OF DEFICIENCY

Los Alamos National Laboratory
Research, Development and Demonstration (RD&D) Permit Application
Packed Bed Reactor/Silent Discharge Plasma (PBR/SDP) Unit

The following information is provided in response to the Notice of Deficiency (NOD) issued to LANL on May 10, 1993 by the State of New Mexico Environment Department (NMED) for the RD&D permit application dated December 1992. Additional information provided here in response to NOD comments has been incorporated into a revised permit application dated June 24, 1993.

1. **LANL Application Section 2.9: General Facility Information [HWMR-7 Part IX; 40 CFR 270.14(b)(19)].**

   LANL must provide a topographic map showing a distance of 1000 feet around the facility at a scale of 2.5 centimeters (1 inch) equal to not more that 61.1 meters (200 feet). Contours must be shown on the map. The contour interval must be sufficient to clearly indicate the pattern of surface water flow in the vicinity of the facility.

   The presence of any Holocene faults within 61.1 meters must also be shown on the map to meet the requirements of HWMR-7, Part IX, and 40 CFR 264.18(a).

   Response: Building 128 at TA-35 is located at latitude 35.8624 and longitude -106.2945. A topographic map covering the RD&D unit location has been developed and included in the revised permit application as Figure 5. The topographic map has been prepared at a scale of 1 inch equal to 200 feet and with contour intervals of 2 feet. The map shows a 1000 foot radius around the RD&D unit. Additionally, the nearest seismic fault lines have been superimposed on the topographic map to show that the unit is not located near any fault traces. Additionally, Figure 2 (RD&D Unit Key Map) is a new drawing provided to show the location of TA-35 relative to other areas, including TA-9. Another RD&D permit application has been submitted for a research unit located at TA-9.

   The RD&D unit is located in Los Alamos County, New Mexico, which is listed in 40 CFR Part 264 Appendix VI. The seismicity of LANL is discussed in detail in the Part B Application submitted to acquire the existing facility-wide

RCRA permit. As shown in Figure 6 adapted from LANL's 1988 Part B Permit Application, no faults or fault traces with Holocene (or other) displacements have been located within 200 feet of the location of the RD&D unit. Additionally, seismic fault traces have been superimposed on the topographic map prepared for the unit and provided as Figure 5 to the revised permit application. Figure 5 clearly shows that the RD&D unit is not located within 200 feet of a known fault.

In accordance with 40 CFR 270.14(b)(11)(iii) and HWMR-7 Part IX, the PBR/SDP unit is not located in the 100 year floodplain. As required under the Hazardous and Solid Waste Amendment Module VIII of LANL's RCRA Permit, LANL has mapped all 100-year floodplain boundaries within the LANL complex. The mapping procedures used techniques that comply with 40 CFR 270.14(b)(11)(iii). A report documenting these floodplain mapping procedures has been published. Final floodplain maps were submitted to NMED in June 1992. Attachment 8 to the revised permit application includes a copy of the letter sent to NMED with the floodplain maps.

This information has been added to Section 2.3 of the permit application.

2. **LANL Section 3.3: General Waste Analysis [HWMR-7 Part IX; 40 CFR 264.13 and 270.13(i,j)].**

LANL must explain how the characterization and analysis of the effluent hazardous wastes and residual trace organics after treatment will be conducted. The type, concentration, and chemistry of the subject waste constituents before, during, and after treatment must be described. LANL must also state why the effluent is not to be monitored beyond the last monitoring point shown on diagrams 6 and 7 of the application text. The chemistry of the "trace quantities of unreacted wastes and reaction by-products" which constitute part of the wastes that are generated continuously must be presented.

<u>Response</u>: Attachment 1 to the RD&D permit application provides laboratory waste characterization data for each of the three waste streams proposed to be treated in the PBR/SDP system. These wastes have been characterized in accordance with EPA SW-846 Methods as identified on the laboratory summary sheets in Attachment 1.

The rationale for the selection of sampling points in the system is to allow for the collection of data before and after the main process units (i.e., before and after the packed-bed reactor and before and after the silent discharge

plasma unit). In the open-loop configuration, the makeup of the waste going into the system is known from waste analysis (see Attachment 1 to the application). A final sequential monitoring point labelled "D" has been added to the open-loop system depicted on Figure 9 (formerly Figure 6) to the revised permit application. This makes the sampling in the open-loop system consistent with sampling in the closed-loop system. Sampling point "D" allows an evaulation of the effluent that has been treated in the PBR/SDP and acid scrubber units. Previous work with surrogates has shown that volatile organic compounds are virtually destroyed (99.99%) in the treatment process. The charcoal filter is not part of the technology, but is a redundant feature added as a safety precaution. Therefore, final monitoring of the effluent will take place at sampling point "D".

The final sequential monitoring point on the closed-loop system configuration is labelled sampling point "D" on Figure 10 (formerly Figure 7) to the revised permit application. This is the last point in the closed-loop treatment system, located just prior to the junction where the effluent would be reintroduced into the system. Effectively, therefore, there is no sequential monitoring possible beyond point "D" shown on Figure 10. Monitoring at point "D" allows an evaluation of the effluent reentering the system following an initial pass through the treatment process.

As described in Section 3.2 of the application, the major expected by-products of the waste treatment process are water and carbon dioxide. The treatment process is highly efficient, and is capable of 99.99% destruction of the organic constituents in the wastes. The "trace quantities of unreacted wastes" refers to the 0.01% of the waste that may not be treated. The composition of the unreacted waste is described in Attachment 1 to the permit application. The "trace quantities of reaction by-products" refers to small amounts of carbon monoxide that may be generated. Additionally, treatment of wastes containing trichloroethylene will produce hydrochloric acid in the system scrubbers and trace quantities of phosgene in the gaseous effluent. Phosgene can be destroyed either by increasing the power to the silent discharge plasma cells or by scrubbing the phosgene gas out of the effluent in the scrubbers where it is hydrolyzed (decomposed) by water. Clarification information regarding expected effluent composition has been added to Section 3.2 of the revised application.

3. LANL Section 3.3: Sampling Plan [HWMR-7 Part IX; 40 CFR 264.134(b)(3) and 270.14(d)(1)(v)]

LANL must demonstrate how representative samples of hazardous wastes will be obtained from the barrels. A sampling and analysis plan (SAP) that is site-specific and third-party executable must be provided. The SAP must include at a minimum the following: the methods used to sample the wastes of interest; the rationale for the choice of the sampling methods; the statistical approach, procedures, and principles applied in data acquisition and evaluation (e.g., determination of the appropriate number of samples to be taken from the containers); and the frequency of sampling should also be stated.

In addition, LANL must submit a specification of all wastes that have been managed at the unit, to the extent available, as well as a brief discussion of performance data that was gathered previously on the operation of the unit. The types of samples to be taken from the containers and the chain-of-custody procedures must be presented.

Response: The research objective of the work to be conducted under this permit is to determine if process data for a real waste stream is comparable with data produced for surrogates of that waste stream. The answer will determine if the present technology is worth pursuing on a more complex and hazardous waste in future research. Components of the waste have been tested individually in the unit as surrogate (i.e., non-waste) materials. These tests have demonstrated 99.99% destruction of the surrogates.

The main purpose of obtaining a RD&D permit at this time is to allow the research to continue into a phase where an actual waste may be processed by the unit. If it can be successfully demonstrated that similar destructive efficiencies with the real waste can be achieved as those with the surrogate work, then modifications to this application may be made to deal with different and more complex waste than those proposed at this time.

A Sampling and Analysis Plan (SAP) has been prepared covering RD&D treatment in the PBR/SDP unit. The SAP is incorporated into the Quality Assurance Project Plan (QAPP) included in this revised permit application as Attachment 10. The SAP, which is found in Section 5 of the QAPP, addresses the NOD comment concerns listed above.

To date no wastes have been treated in the proposed RD&D unit. Several raw material (i.e., non-waste) surrogates have been tested to evaluate the effectiveness of the unit in treating organic constituents. A copy of a paper titled "Nonthermal Plasma Alternative to the Incineration of Hazardous Organic Wastes" that was submitted to the 11th International Incineration Conference in May 1992 is

provided as Attachment 11 to the revised permit application. As summarized in this paper, PBR treatment has been conducted on mixtures of commercial cutting oil containing up to several percent trichlorethylene (TCE), trichloroethane (TCA), and carbon tetrachloride (CCl_4). These experiments have demonstrated that when the PBR unit is operated alone the unit is capable of removal of TCA down to the parts per million level and removal of TCE and CCl_4 down to approximately 100 parts per billion level. When the SDP unit has been operated alone, removal of >>99% TCE and 90% CCl_4 have been noted. When the PBR/SDP unit treatment is combined, as proposed under the RD&D permit, mixtures containing several percent chlorocarbon concentrations have been removed to well below the 100 parts per billion level. A discussion of previous research conducted with the PBR/SDP unit has been added to Section 5.0 of the revised permit application.

4. **LANL Section 5.2: Design and Operation of the Facility [HWMR-7 Part IX; 40 CFR 264.31].**

LANL must explain the discrepancy in operating temperature ranges found in Section 5.2, page 13 of the application (given as 250 °C to 1300 °C) contrary to the values of the same parameters presented in Attachment 4, Section IV, paragraph "a" of the text (as ranging from 800 °C to 1000 °C). LANL must also present the advantages and disadvantages of closed loop and open piping that were mentioned in LANL's description of the Silent Discharge Plasma components.

LANL must also provide additional detailed information for the RD&D unit and its operation, including: process efficiency, data accumulation requirements, expected duration of operation, quantity of waste processed for individual experiment runs, and training records for all individuals that will be involved in the research.

Response: The operating temperatures provided in Attachment 4 to the permit application are those Standard Operating Procedures (SOPs) used to currently operate the system using non-waste, non-RCRA regulated materials. Under the proposed RD&D operations, a broader range of temperatures will be tested to evaluate system effectiveness under different temperatures. If and when a RD&D permit is issued, the SOP will be revised to include the broader range of temperatures under which the system will be operated. It should be noted that the system can be safely operated within the wide temperature range proposed for RD&D experiments and that unit includes a computer controlled feedback system, described in Section 5.3.1 of the application, which

monitors and responds to temperature and pressure in the treatment system.

The open-loop and closed-loop systems refer to the combined PBR and SDP system, not merely the SDP unit as indicated in the NOD comment. In the open loop-configuration, the treatment process effluent gases, which first pass through the PBR unit followed by the SDP unit, are vented to the atmosphere. In the closed-loop configuration, the effluent gas exiting the SDP unit is used to vaporize the incoming waste stream that is injected into the PBR unit. Under closed-loop operation there is no release of gaseous effluents to the atmosphere.

The advantages of the open-loop configuration are that the system is simple and emissions can be controlled by increasing the power to the silent discharge plasma unit. The disadvantage of the open-loop system is that effluents are released to the atmosphere.

The advantage of the closed-loop system is that the gaseous effluents from the treatment process are not released to the atmosphere. The disadvantage of the closed-loop system is that it is more complicated to operate. Testing of a closed-loop system is also an important step towards the long term goal of potentially using the PBR/SDP unit to treat radioactive mixed wastes. Treatment of mixed wastes would not involve any releases to the atmosphere. Therefore, evaluating system performance in a closed-loop configuration using non-radioactive wastes is a crucial step towards a potential treatment option for mixed wastes in storage both at LANL and other DOE facilities nation-wide.

The precise process efficiency for the proposed waste streams is not known at this time. Past performance has indicated that the unit is capable of achieving a 99.99% and greater destruction efficiency. Destruction efficiency is fundamentally related to the temperature of the PBR unit and electrical power delivered to the SDP unit. Higher temperatures and higher voltages produce greater destruction efficiencies. As a research unit, the PBR/SDP system will be operated under a variety of operating conditions to evaluate system performance. Parameters that will be varied during research operations are described in Section 5.2 of the permit application. The response to NOD comment number 3 above and the information in Attachment 11 to the revised permit application provide a summary of the process efficiency determined using non-waste materials in the PBR and SDP units.

Data accumulation is described in Section 7.0 of the application. Information on influent feed rate and air

flow, temperature, and effluent composition will be stored in the system computer databases.

The duration of a particular experimental run is typically less than 4 hours. The minimum run will be 1 hour; the maximum run will be 8 hours. The quantity of waste treated in a particular experimental run will depend on the duration of the run and the waste feed rate. The proposed rate of waste feed input is 36 to 108 kilograms per day (for an experimental run of 8 hours). Assuming an average input of 72 kg/day and an average 250-day working year, the approximate waste treatment quantity is 18,000 kg/year.

Training records for research personnel are provided in Attachment 8 to the revised permit application. Training records will be maintained in both LANL's lab wide Health and Safety (HS-3) Division and the individual's employment group (e.g., Chemical and Laser Sciences Division). Supervisors will ensure that all required training is provided prior to operating the unit under an RD&D permit.

5. **LANL Section 5.3: Monitoring and Records [HWMR-7 Part IX; 40 CFR 270.30(j) and 264 Appendix I].**

LANL must state what parameters they will be monitoring for in both the Packed-Bed Reactor and the Silent Discharge Plasma Treatment Units. LANL must also indicate how often the equipment in question will be monitored.

LANL's project monitoring records for data gathering and analysis shall include:

(a) The date, exact place, and time of sampling or measurements;
(b) The individual(s) who performed the sampling or measurements;
(c) The date(s) the analyses were performed;
(d) The individual(s) who performed the analyses;
(e) The analytical techniques or methods used; and
(f) The results of such analyses.
(g) Environmental monitoring for protection of human life and the environment.

LANL must generate worksheets and/or checklists specific to this project. Further, LANL must supply a format for recording personnel training to include certifications already held and where the training record will be kept on site.

Response: Parameters to be varied under the proposed RD&D program are detailed in Section 5.2 of the permit application. These include:

- System configuration,
- Number of PBR units,
- Number of SDP cells,
- PBR temperature,
- Input waste feed rate into the PBR,
- Oxidizing gas flow rate into the PBR,
- SDP cell power (voltage, charge, and repetition).

Data on PBR/SDP parameters will be collected in bound laboratory notebooks and the computer databanks, as detailed in Section 7.0 of the permit application. The research project will primarily rely on an automated computer data-gather system. The information recorded in the computer databanks will include:

- Input waste feed rate into the PBR,
- Input gas feed rate into the PBR,
- PBR temperature,
- Effluent gas flow rate after the PBR
- Effluent gas flow rate before the SDP
- Effluent humidity and temperature after the PBR unit,
- Pressure in the packed bed,
- SDP cell power (voltage, charge, repetition),
- Effluent carbon monoxide, carbon dioxide, and oxygen composition.

As described in further detail in the QAPP in Attachment 10 to the revised permit application, LANL's project monitoring records for data gathering and analysis of the effluent shall include:

- Date and time of sampling,
- Sampling location,
- Name of individual(s) who performed the sampling or measurements.

Environmental monitoring for protection of human health and the environment is an integral part of the overall research program. Continuous computer monitoring of the temperature and pressure in the system ensures safe operating conditions, and monitoring of the effluent enables the researchers to evaluate treatment effectiveness. Section 7.0 has been revised to clarify recordkeeping.

The on-site analytical laboratory performing the EPA analtyical methods will submit summary reports of analytical results to the research project manager. At a minimum the

summary reports shall contain (1) laboratory review/approval date and signature (2) date sample received; (3) sample preparation date; (4) sample analysis date; (5) preparation and analysis method reference; (6) sample identification number; (7) laboratory sample identification number; (8) sample reporting or detection limit; (9) laboratory quality control sample results including calculated percent recoveries, relative percent differences and self-imposed control limits, if applicable; and (10) dilution factors, if required for sample analysis.

Unit-specific worksheets that have been developed for the project include the inspection log included as Attachment 5 to the revised permit application. Use of this worksheet will assist research personnel in ensuring that all RD&D related items are regularly inspected and in good working order to protect human health and the environment. Section 5.4 of the revised permit application now refers to this new inspection sheet.

As discussed in the response to NOD comment number 4 above, training records for research personnel are provided in Attachment 8 to the revised permit application. Training records will be maintained in both LANL's lab wide Health and Safety (HS-3) Division and the individual's employment group (e.g., Chemical and Laser Sciences Division).

6. **LANL Section 5.4: Inspection Procedures [HWMR-7 Part IX; 40 CFR 264.35].**

LANL must explain why no provision is made for aisle space to allow the unobstructed movement of personnel, fire protection equipment, spill control equipment, and decontamination equipment to any area of the Hazardous Waste Research, Development, and Demonstration Activity.

LANL must provide easy access to the three hazardous waste containers for inspection purposes. LANL's inspection form presented in Attachment 5 must be specific to the research facility in question and not generalized for the entire laboratory system. The hazardous waste barrels shall bear conspicuous labels signifying their contents.

Response: Aisle space is maintained around the PBR/SDP unit to allow unobstructed movement of personnel and any fire protection equipment, spill control equipment, or decontamination equipment that may be needed to respond to an emergency at the treatment unit. The actual size of the unit is relatively small and occupies only a small portion of the building in which it is located. Figure 4 to the revised permit application provides a schematic of the

system location and associated work areas. Aisle space will be actively maintained through inspections of the area to be performed each day that the unit is operated. This information has been added to Section 5.4 of the revised application.

A unit-specific inspection sheet has been developed and is provided as Attachment 5 to the revised permit application. This inspection sheet identifies problems that may occur at the unit including blocked access to the RD&D hazardous waste container storage area and missing labels on waste containers. This unit-specific inspection sheet will be completed instead of the general Inspection Record Form (IRF) previously provided as Attachment 5 to the December 1992 permit application version.

7. **LANL Section 6.0: Quality Assurance/Quality Control (QA/QC) [HWMR-7 Part IX; 40 CFR 264.13, 270.30(e)].**

LANL must describe the entire RD&D Program in detail, including the whole Quality Assurance and Quality Control plan, since the QA/QC implementation will determine the accuracy, precision, and overall integrity of the project. LANL must furnish a comprehensive account on the procedures for data handling, review, and reporting (providing examples of records to be maintained and their location at the facility), and specify data validation techniques.

Response: A Quality Assurance Project Plan (QAPP) is provided as Attachment 10 to the revised permit application. The QAPP addresses the NOD comment concerns. Records are stored in a file cabinet in the Chemical and Laser Sciences (CLS) lab. If the CLS lab were shut down or its mission changed, then the files would be sent to archives for storage.

8. **LANL Section 8.0: Security and Safety Plans [HWMR-7 Part IX; 40 CFR 264.14, 264.56].**

LANL must provide a site-specific security plan and show how that plan will interface with LANL's facility-wide plan. LANL must furnish information regarding the safety of the building itself (e.g., the soundness of the building, its walls, surfaces, ventilation system, and the floor), and show how the requirements of 264.14(a) and (b) are met.

LANL must provide reasons for the lack of 24-hour surveillance and restricted entry to non-personnel visitors. LANL must supply a format for recording personnel training

to include certifications already held and where the training record must be kept on site.

Response: The PBR/SDP unit is located inside Building 128 at TA-35. The Building 128, which is constructed of concrete, sheet metal and metal beams, is structurally sound and secure against unauthorized entry through the walls, roof, or vents. The room is actively monitored by research personnel during daytime hours, and no unauthorized personnel or unescorted visitors are allowed into this research building. LANL's security force regularly patrols the areas outside of and surrounding Building 128. During off-hours, the doors to Building 128 are locked to prevent unauthorized entry. TA-35 is surrounded by a barbed-wire topped chain-link fence. During off-hours the gate to TA-35 is closed and locked and LANL's security force regularly patrols the area. The entrance to Building 128 is posted with a sign reading "Authorized Personnel Access Only." This information has been added to Section 8.0 of the revised permit application.

As discussed in the response to NOD comment number 4 above, training records for research personnel are provided in Attachment 8. Training records will be maintained in both LANL's Health and Safety (HS-3) Division and the individual's employment group (e.g., Chemical and Laser Sciences Division).

Revision 1
6/24/93

FIGURE 6

LOCATION OF RD&D UNITS RELATIVE TO NEARBY FAULT TRACES

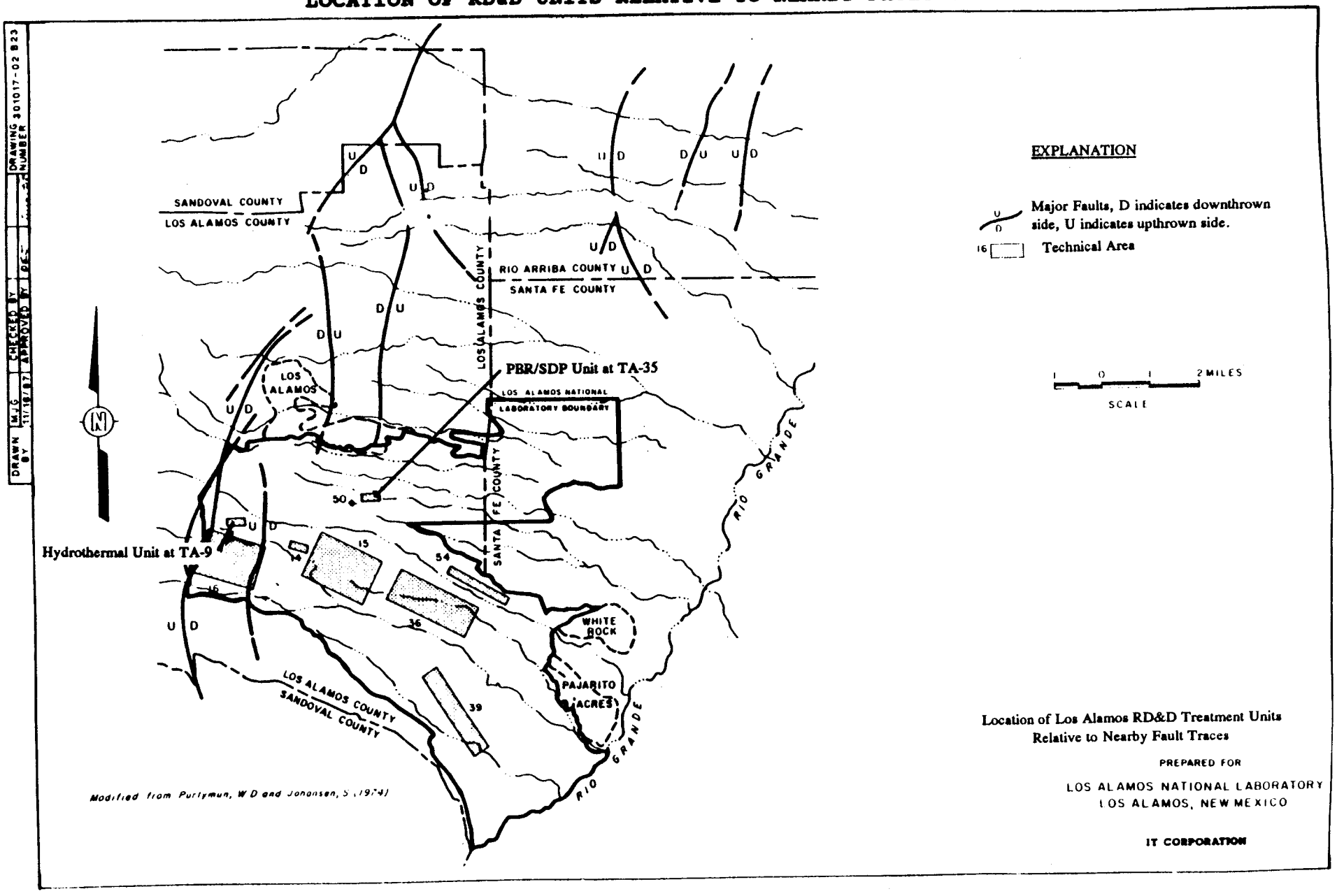

Source: Los Alamos National Lab, Part B Permit Application, 1988

FIGURE 7

Packed-Bed Reactor

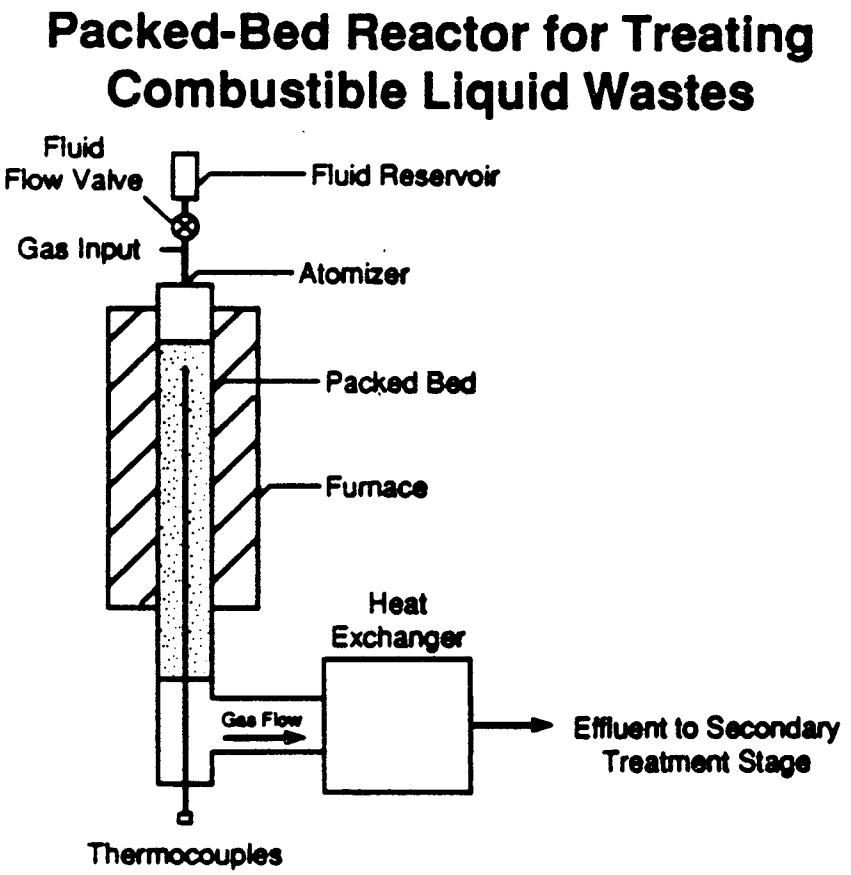

FIGURE 8

Cross-Section of Silent Discharge Plasma Unit

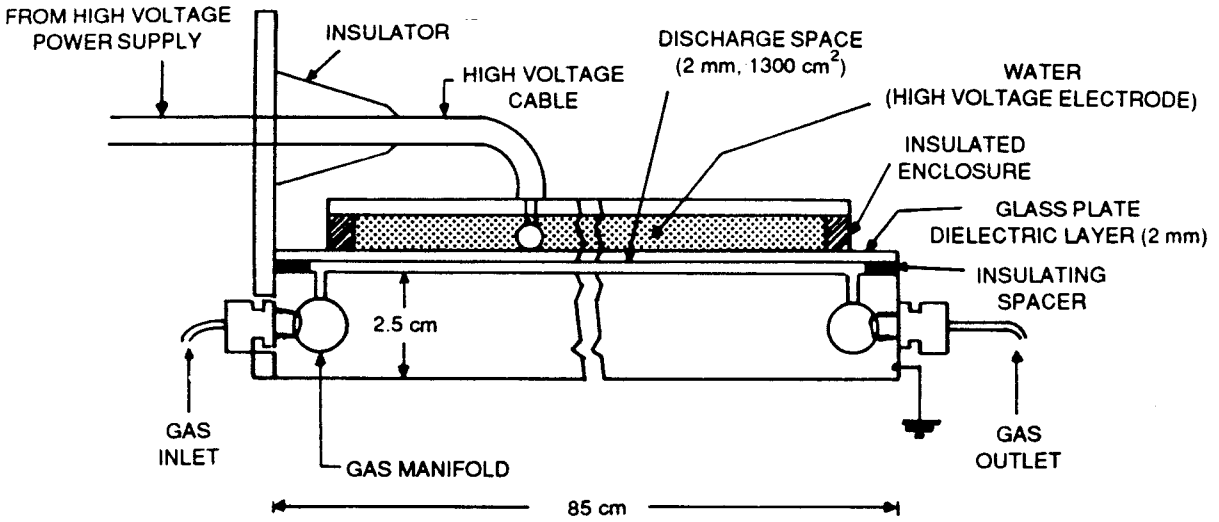

FIGURE 9

Revision 1
6/24/93

Packed-Bed Reactor/Silent Discharge Plasma RD&D Unit: Open-Loop Configuration

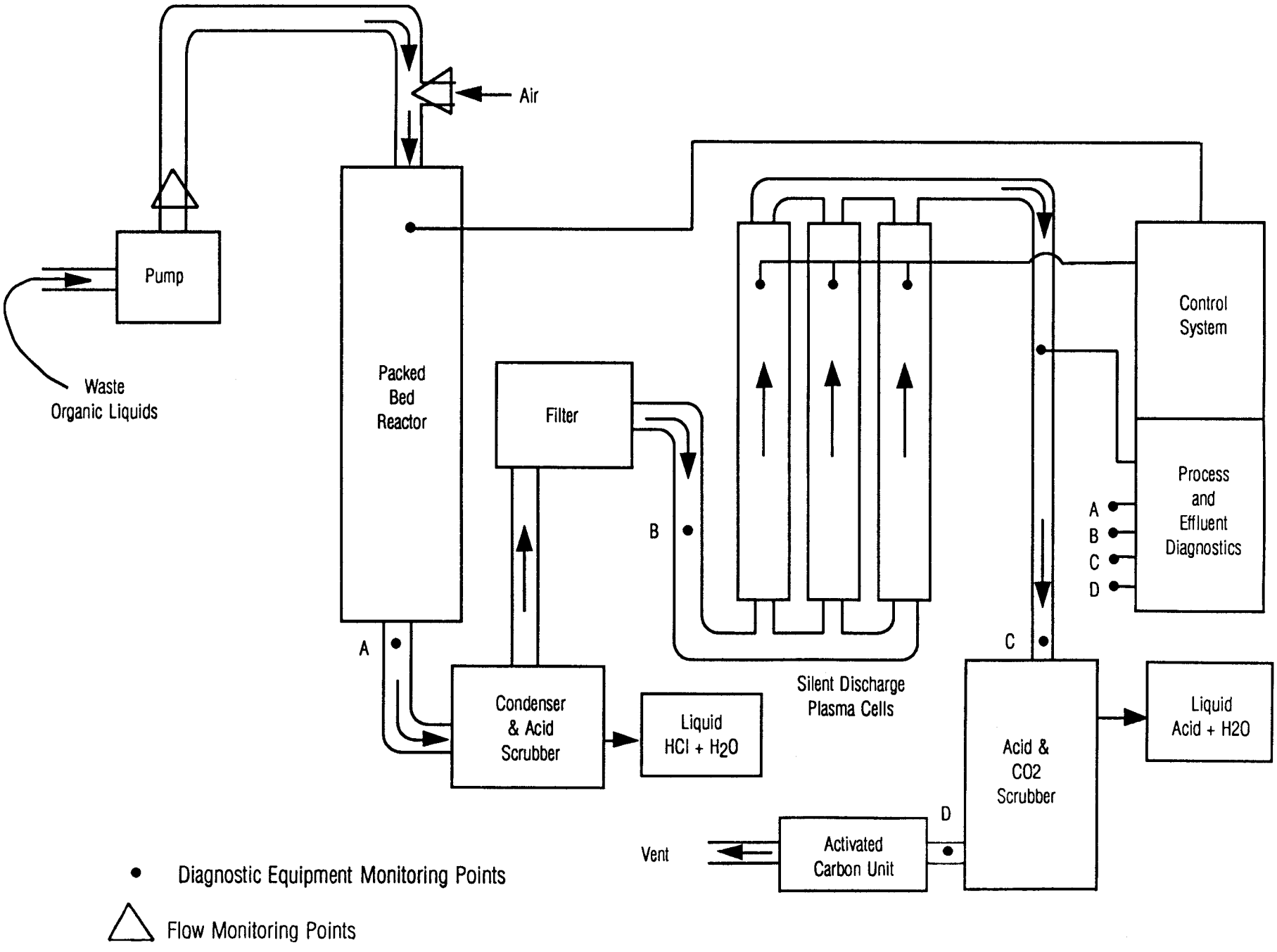

FIGURE 10

Revision 1
6/24/93

Packed-Bed Reactor/Silent Discharge Plasma RD&D Unit: Closed-Loop Configuration

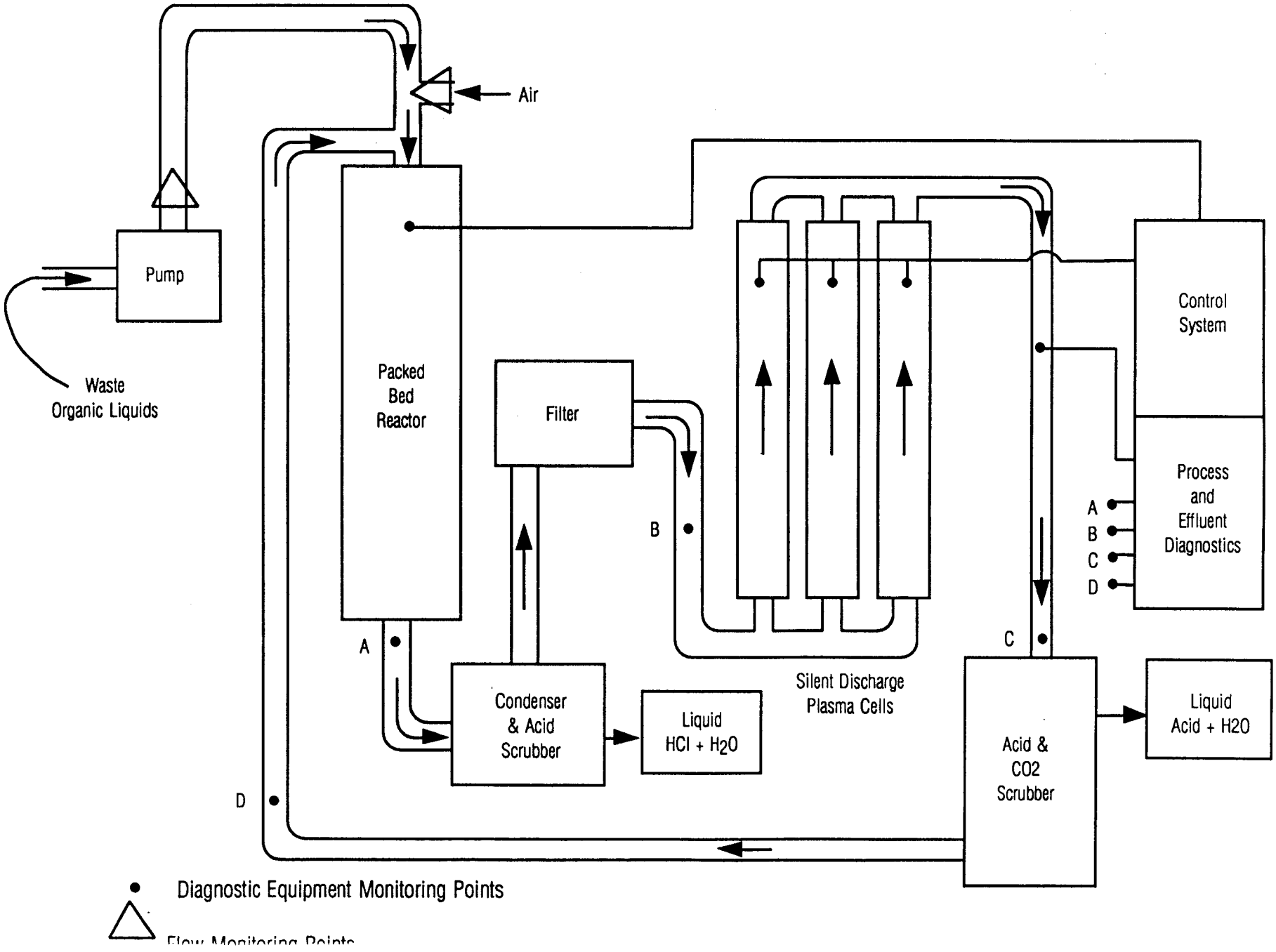

LOS ALAMOS NATIONAL LABORATORY

RESEARCH, DEVELOPMENT AND DEMONSTRATION

ADMINISTRATIVE RECORD

PACKED BED REACTOR/SILENT
DISCHARGE PLASMA UNIT

State of New Mexico
ENVIRONMENT DEPARTMENT
Harold Runnels Bulding
1190 St. Francis Drive, P.O. Box 26110
Santa Fe, New Mexico 87502
(505) 827-2850

BRUCE KING
GOVERNOR

JUDITH M. ESPINOSA
SECRETARY

RON CURRY
DEPUTY SECRETARY

LEGAL NOTICE # 57

NEW MEXICO ENVIRONMENT DEPARTMENT
HAZARDOUS AND RADIOACTIVE MATERIALS BUREAU
Santa Fe, New Mexico 87502

November 29, 1993

NOTICE OF INTENT TO PERMIT A RESEARCH, DEVELOPMENT,AND DEMONSTRATION UNIT

The State of New Mexico is authorized to operate a hazardous waste management program in lieu of the Federal program for those portions of the Resource Conservation and Recovery Act (RCRA) in effect prior to the enactment of the Hazardous and Solid Waste Amendments of 1984 (HSWA). The HSWA impose additional requirements on hazardous waste management facilities which will be administrated by the U.S. Environmental Protection Agency (EPA) until the State of New Mexico receives additional authorization for those requirements.

Under authority of the New Mexico Hazardous Waste Act (Section 74-4-1 et. seq. NMSA 1978, as amended, 1989) and the New Mexico Hazardous Waste Management Regulations (HWMR-7), the New Mexico Environment Department (NMED) can approve or deny permit applications. NMED has received a permit application submitted by the **Department of Energy (DOE)/Los Alamos National Laboratory (LANL), EPA I.D. Number NM0890010515**, for the DOE/LANL Packed-Bed Reactor/Silent Discharge Plasma Unit.

DOE/LANL is a contractor operated research facility under the administration of the Department of Energy (DOE) located near Los Alamos, New Mexico.

The administrative record for this permit application consists of the permit application, a fact sheet, and related correspondence. The administrative record may be reviewed at NMED, Hazardous and Radioactive Materials Bureau, 525 Camino de los Marquez, Suite #4, Santa Fe, New Mexico 87502 (Monday through Friday, between 8:00 am and 5: pm). The draft permit and fact sheet may be viewed at the Environmental Restoration Community Reading Room, 1450 Central Avenue, Suite 101, Los Alamos, New Mexico (Monday

through Friday from 9:00 am to 12:00 Noon and from 1:00 pm to 5:00 pm). To obtain a copy of the administrative record or any part thereof, at 35 cents per page, please contact Mr. Cornelius Amindyas at the above Santa Fe address or call (505) 827-4308.

Any person who wishes to comment upon the draft permit or to request a public hearing should submit written comments and requests, along with the commentor's name and address, to the Santa Fe address. Requests for a public hearing shall state the nature of the issues proposed to be raised in the hearing and the name and address of the commenter. Only comments and/or requests received by **January 14, 1994** will be considered. NMED will provide a thirty (30) day notice of a public hearing, if scheduled.

NMED must ensure that the approved draft permit is consistent with the New Mexico Hazardous Waste Management Regulations for permits. All written comments submitted on the draft permit will be considered in formulating a final decision. NMED may modify the draft permit based on the comments received. NMED will notify DOE/LANL and each person who submitted a written comment during the public comment period of the final decision.

After consideration of all written comments received, NMED will approve, or modify and approve the draft permit. If NMED modifies and approves the draft permit, then NMED shall provide DOE/LANL with a detailed written statement of reasons for the modification and the modified draft permit will become the approved permit. A copy of the modified permit with a detailed statement of the reasons for the modifications will be mailed to DOE/LANL.

State of New Mexico
ENVIRONMENT DEPARTMENT
Harold Runnels Bulding
1190 St. Francis Drive, P.O. Box 26110
Santa Fe, New Mexico 87502
(505) 827-2850

BRUCE KING
GOVERNOR

JUDITH M. ESPINOSA
SECRETARY

RON CURRY
DEPUTY SECRETARY

DRAFT RESEARCH, DEVELOPMENT AND DEMONSTRATION PERMIT
FACT SHEET

for the

LOS ALAMOS NATIONAL LABORATORY

PACKED-BED REACTOR/SILENT DISCHARGE PLASMA UNIT

LOS ALAMOS, NEW MEXICO

Activities:	Packed-Bed Reactor/Silent Discharge Plasma experimental hazardous waste treatment at the Department of Energy (DOE)/Los Alamos National Laboratory (LANL) under the New Mexico Hazardous Waste Act.
Facility Name:	Department of Energy Los Alamos National Laboratory
EPA I.D. No.:	NM0890010515
Location:	The DOE/LANL facility is located in Los Alamos County, New Mexico, southwest of the city of Los Alamos. The site is in Technical Area (TA) 35, Building 128.
Unit Purpose:	The research objective of the work to be conducted under this Permit is to determine if process data for a real hazardous waste stream generated at the LANL facilities is comparable with data produced for surrogates of that waste stream. The answer will determine if the present technology is worth pursuing on a larger scale in future research. Components of the hazardous waste have been tested individually in the unit as surrogate (i.e. non-waste) materials. These tests have demonstrated 99.99% destruction of the surrogates. The main purpose of obtaining an RD&D Permit at this time is to allow the research to continue into a phase where an actual waste

may be processed by the unit. If it can be successfully demonstrated that similar destructive efficiencies with the real waste can be achieved as those with the surrogate work, then modifications to this Permit may be made to deal with different and more complex waste than those proposed at this time.

Unit Description:

The combined Packed-Bed Reactor/Silent Discharge Plasma (PBR/SDP) unit will be housed in Building 128. The PBR treatment unit involves use of an alumina pellet filled bed that is heated with an external electrical furnace. Liquid organic hazardous wastes are injected along with a carrier gas (air) into the PBR where many of the hazardous compounds undergo vaporization and thermal decomposition. More complex hazardous compounds may resist thermal decomposition within the PBR and, therefore, require further treatment. As part of the RD&D activities, this further treatment will be provided by the SDP.

The SDP treatment is an advanced oxidation technique that will be used for second stage treatment of effluents from the PBR unit. SDP technology involves the use of a non-thermal electrical discharge plasma. Large quantities of reactive free radicals are generated in the plasma, and the free radicals react with and decompose the remaining hazardous organic constituents in the effluent. In contrast to thermal processes, the SDP operates at near-ambient temperature and pressures, thereby eliminating complications typical of thermal treatment.

The end products of the PBR/SDP waste treatment process include primarily carbon dioxide, water, carbon monoxide, acids, and trace quantities of unreacted waste and reaction by-products. LANL plans to operate up to three cells for the RD&D experiments during which 36 to 108 kilograms of the planned hazardous waste will be destroyed per day.

Draft Permit Availability:

A copy of the draft Permit is available for public review at the Environmental Restoration Community Reading Room, 1450 Central Avenue, Suite 101, Los Alamos, New Mexico, (Mondays through Fridays from 9:00 am to 12:00 Noon, then from 1:00 pm to 5:00 pm); and at the New Mexico Environment Department (NMED), Hazardous and Radioactive Materials Bureau (HRMB), 525 Camino de los Marquez, Suite 4, Santa Fe, New Mexico 87502 (Mondays through Fridays between 8:00 am and 5:00 pm). Requests for hearing should include a statement of the nature of the issues proposed to be raised in the hearing and must include the requestor's name and address. Only comments and requests for hearing received by **January 14, 1994** will be considered. The NMED will publish a thirty day (30) notice of a public hearing, if scheduled.

Final Decision:

All comments received on the draft Permit during the public comment period will be considered in reaching a final Permit approval decision. The NMED will notify LANL and each person who submitted a written comment, of any changes made in finalizing the Permit.

ENVIRONMENT DEPARTMENT ROUTING SLIP

Letter To: Mr. Jerry Bellows, Los Alamos National Lab

For: BARBARA HODITSCHEK SIGNATURE

Drafted By: Cornelius Amindyas 05/01/93
Date

Subject: RD & D Notice of Deficiency

FINAL DECISION NEEDED BY: ASAP REASON

Review:

		Initial	Date Rec'd	Date Apprv'd
Barbara Hoditschek	PROGRAM MANAGER	BH	5/5/93	
Benito Garcia	BUREAU CHIEF			
Stephanie Stoddard		SS	5/5	5/5
David Englert		DE	5/6	
	ACCOUNTING			
	BUDGETS			
	LEGAL REVIEW			
	ASD DIRECTOR			
	WMM DIRECTOR			
	ERD DIRECTOR			
	DEPUTY SECRETARY			
	SECRETARY			
	OTHER			

COMMENTS BY DRAFTER OR REVIEWER(S):

copy for BH

RCRIS given to Anna Walker 5/10 CS

State of New Mexico
ENVIRONMENT DEPARTMENT
Harold Runnels Bulding
1190 St. Francis Drive, P.O. Box 26110
Santa Fe, New Mexico 87502
(505) 827-2850

BRUCE KING
GOVERNOR

JUDITH M. ESPINOSA
SECRETARY

RON CURRY
DEPUTY SECRETARY

CERTIFIED MAIL
RETURN RECEIPT REQUESTED

May 10, 1993

Mr. Jerry Bellows, Area Manager
Department of Energy
Los Alamos Area Office
528 35th Street
Los Alamos, New Mexico, 87544

RE:NOTICE OF DEFICIENCY
NM0890010515

Mr. Bellows,

The New Mexico Environment Department (NMED) has completed an administrative review of the the Los Alamos National Laboratory (LANL) Research, Development and Demonstration (RD&D) permit application entitled: Packed Bed Reactor/Silent Discharge Plasma Treatment Unit, dated December, 1992, for an RD&D permit as required under the Resource Conservation and Recovery Act.

Based on this review, NMED has found the application to be administratively deficient. Attached is a list of the deficiencies that must be addressed in accordance with the New Mexico Hazardous Waste Management Regulations (HWMR-7, as amended 1992), Part IX, 40 CFR §264 and §270. You are asked to comment where necessary in order to rectify any misunderstandings.

Please submit the above requested information in one package within 30 days from the receipt of this letter. You may request a meeting to discuss the deficiencies and the required information. Such a meeting must be held within the 30 day period and will not suspend the 30 day deadline for compliance with this notice. Failure to provide all requested information within the 30 days could result in permit denial.

Upon submission of a complete application, LANL will be notified of the determination. A permit fee of $10,000.00 will be assessed and technical review of the application will commence.

If there are any questions regarding this issue, you may contact Cornelius Amindyas of my staff at (505) 827-4308.

Sincerely,

Barbara Hoditschek

Barbara Hoditschek, Manager
RCRA Permitting Program
Hazardous and Radioactive Materials Bureau

cc: Benito Garcia, Bureau Chief, HRMB
Jerry Bellows, LANL, MS-490
K. Hargis, EM-8, LANL, MS-K490
D. Hjeresen, EE-AETO, LANL, MS-F643
File-Red

ATTACHMENT

Note: The following is a list of the sections from LANL Part B RD&D permit application for the Packed Bed Reactor/Silent Discharge Plasma Unit that must be discussed:

1. **LANL Application Section 2.0: General Facility Information**
HWMR - 7, Part IX, 40 CFR, §270.14(b)(19)

LANL must provide a topographic map showing a distance of 1000 feet around the facility at a scale of 2.5 centimeters (1 inch) equal to not more than 61.1 meters (200 feet). Contours must be shown on the map. The contour interval must be sufficient to clearly indicate the pattern of surface water flow in the vicinity of the facility.

The presence of any Holocene faults within 61.1 meters must also be shown on the map to meet the requirements of HWMR - 7, Part IX, 40 CFR, §264.18(a).

2. **LANL Section 3.3: General Waste Analysis**
HWMR - 7, Part IX, 40 CFR, §264.13, and §270.13(i,j)

LANL must explain how the characterization and analysis of the effluent hazardous wastes and residual trace organics after treatment will be conducted. The type, concentration, and chemistry of the subject waste constituents before, during, and after treatment must be described. LANL must also state why the effluent is not to be monitored beyond the last monitoring point shown on diagrams 6 and 7 of the application text. The chemistry of the "trace quantities of unreacted waste and reaction by-products" which constitute part of the wastes that are generated continuously must be presented.

3. **LANL Section 3.3: Sampling Plan**
HWMR - 7, Part IX, 40 CFR, §264.13(b)(3); and §270.14(d)(1)(v)

LANL must demonstrate how representative samples of hazardous wastes will be obtained from the barrels. A sampling and analysis plan (SAP) that is site-specific and third-party executable must be provided. The SAP must include at a minimum the following: the methods used to sample the wastes of interest; the rationale for the choice of the sampling methods; the statistical approach, procedures and principles applied in data acquisition and evaluation (e.g. determination of the appropriate number of samples to be taken from the containers); and the frequency of sampling should also be

stated.

In addition, LANL must submit a specification of all wastes that have been managed at the unit, to the extent available, as well as a brief discussion of performance data that was gathered previously on the operation of the unit. The types of samples to be taken from the containers and the chain-of-custody procedures must be presented.

4. **LANL Section 5.2: Design and Operation of the Facility**
HWMR - 7, Part IX, 40 CFR, §264.31

LANL must explain the discrepancy in operating temperature ranges found in section 5.2, page 13 of the application (given as 250°C to 1300°C) contrary to the values of the same parameters presented in Attachment 4, Section IV, paragraph "a" of the text (as ranging from 800°C to 1000°C). LANL must also present the advantages and disadvantages of closed loop and open piping that were mentioned in LANL's description of the Silent Discharge Plasma components.

LANL must also provide additional detailed information for the RD&D unit and its operation, including: process efficiency, data accumulation requirements, expected duration of operation, quantity of waste processed for individual experiment runs, and training records for all individuals that will be involved in the research.

5. **LANL Section 5.3: Monitoring and Records**
HWMR - 7, Part IX, 40 CFR, §270.30(j) and §264 Appendix I

LANL must state what parameters they will be monitoring for in both the Packed-Bed Reactor and the Silent Discharge Plasma Treatment Units. LANL must also indicate how often the equipment in question will be monitored.

LANL's project monitoring records for data gathering and analysis shall include:

(a) The date, exact place, and time of sampling or measurements;
(b) The individual(s) who performed the sampling or measurements;
(c) The date(s) analyses were performed;
(d) The individual(s) who performed the analyses;
(e) The analytical techniques or methods used; and
(f) The results of such analyses.
(g) Environmental monitoring for protection of human life and the environment.

LANL must generate worksheets and / or checklists specific to this project. Further, LANL must supply a format for recording

personnel training to include certifications already held and where the training record will be kept on site.

6. **LANL Section 5.4: Inspection Procedures**
HWMR-7, Part IX, 40 CFR, §264.35

LANL must explain why no provision is made for aisle space to allow the unobstructed movement of personnel, fire protection

equipment, spill control equipment, and decontamination equipment to any area of the Hazardous Waste Research, Development and Demonstration Activity.

LANL must provide easy access to the three hazardous waste containers for inspection purposes. LANL's inspection form presented in Attachment Five must be specific to the research facility in question and not generalized for the entire laboratory system. The hazardous waste barrels shall bear conspicuous labels signifying their contents.

7. **LANL Section 6.0: Quality Assurance/Quality Control (QA/QC)**
HWMR-7, Part IX, 40 CFR, §264.13; §270.30(e)

LANL must describe the entire RD&D Program in detail, including the whole Quality Assurance and Quality Control plan, since the QA/QC implementation will determine the accuracy, precision, and overall integrity of the project. LANL must furnish a comprehensive account on the procedures for data handling, review and reporting (providing examples of records to be maintained and their location at the facility), and specify data validation techniques.

8. **LANL Section 8.0: Security and Safety Plans**
HWMR-7, Part IX, 40 CFR, §§264.14; and 264.56

LANL must provide a site-specific security plan and show how that plan will interface with LANL's facility-wide plan. LANL must furnish information regarding the safety of the building itself (e.g. the soundness of the building, its walls, surfaces, ventilation system, and the floor); and show how the requirements of §264.14(a) and (b) are met.

LANL must provide reasons for the lack of 24-hour surveillance and restricted entry to non-personnel visitors. LANL must supply a format for recording personnel training to include certifications already held and where the training record must be kept on site.

RCRIS Permit/Closure/Post-Closure Event Data Entry Form

Screen 1

Handler ID NM0890010515

Facility Name LANL

Screen 2

Permit Processing # RDD2

Screen 3

Permit Authority S/J/E S

EPA Responsible Person

State Responsible Person CAA

Screen 4

Event Name	Activity Track	Event Code	Resp. Agency	Seq. #	Resp. Person	Status Code	Sched. Date (MM/DD/YY)	Actual Date (MM/DD/YY)	Add/Update/ Delete/Path
PERMIT Issued	RD	200	S		CAA	PI		04/21/94	A

Comments

Screen 5

Link Event to These Unit Groups

Process Code	Unit ID	Process Code	Unit ID	Process Code	Unit ID
T04	HYDROTHERM				

For Additional Unit Links Use Second Block Below

Screen 4

Event Name	Activity Track	Event Code	Resp. Agency	Seq. #	Resp. Person	Status Code	Sched. Date (MM/DD/YY)	Actual Date (MM/DD/YY)	Add/Update/ Delete/Path

Comments

Screen 5

Link Event to These Unit Groups

Process Code	Unit ID	Process Code	Unit ID	Process Code	Unit ID

Special Instructions:

Submitted By: Cornelius Amindyas

Date Submitted: 04-21-94

QA By:

QA Date:

Data Entry By:

Date Entered:

(LANL) Minutes of Public Meeting 3/11/94

Time 9:30am - 11:35 am:

The Meeting started at 9:35 Opened by Barbara Hoditschek (HRM RCRA Manager) explained ~~that~~ why we were here.

PBR/SDP Unit:-

~~very interesting~~

Ms Parrill, Victoria (V.P) => She is not questioning anyone's

John Coogan (J.C) => Looking for new Techs (to do) alternatives to treat hazwaste more safely & faster.

2-stage syst - solvents, oils, greases and polychlorinated solvents-

Purpose to take liq from liq to gas phase from PBR to SDP cells. Beds packed w/ ceramic beads to raise T° - to heat exchange to discharge cells at Room T°C & P.

c/f Ozonation process in Europe.

In PBR-SDP free radicals are generated

and e⁻s produce the free radicals
the f.r.s oxidize the waste

PBR

V. Pow. where does waste go from discharge cells/scrubbers

J. Coogan - CO_2 dissolved; HCl removed by neutralization.

Craig Mallo (LANL Study Group):

MR X - Any dioxin produced in SDP?

Ms P. - How much waste will be destroyed/day

J.C.:- A few liters per hour (= 10 mm/min)

MR C.M - Is this an energetically viable tech.?

J.C. - In SDP cell 5 - 10 kw powe. Applicable to

Craig Mallow, MR X - Is dioxin produced

PBR: Is a metal packed ceramic bed
TCE is the main waste comp.

What % of TCE is destroyed in PBR of SDP

J.C - PBR that's part of the expt to det the by-product formation

MR CM: Is this a form of incinerator.

JC No an inc. has an open flame while PBR/SDP doesn't

$C_2HCl_3 + OH \rightarrow CO_2 + H_2O + HCl$

"y Product Reaction: $NaOH + HCl \rightarrow NaCl + H_2O$
Same chem as hap in an inc. but here room t & no dioxin formation by

CM: What's the scale of the expt?

JC: 6" ⊖ (PBR) furnace c. 1 m long & 20-25" long & power supply ≈ that of a refrigerator.
Destr^n rate ≈ 1 quart/hour.

Indicated an accidental release amount (way below regulated amounts)

VP: End product salt & water or water & salt?

LR: How does Permit address end products?
: Salt

Lou Rosocha: mat will be taken by Waste Mgmt group to respective disposal site LDR?

CM: Tech. transfer aspects of waste destr^n (APRI)

LR: Will meet people from other parts of the world. APRI is out to enable businesses stay open. Aim of CRETH is

this will be to demonstrate this & try to get a manufacturers that can use it.

LR: Adv. Though more energy is consumed off regular units, can be used in treating oxides etc to curb & prevent acid rain as these products are precursors of

(LR - Beef → Benzene & Toluene in restaurants)

APRI =

CRETA =

CM: If you had a leak in the PBR/SDP system, what's the survival time of the radicals

JC - In milliseconds. Field demonstrations in Savannah River - There is a secondary containment built in to catch hazwaste should SDP leak.

CM: can SO_2 & NO_2 be destroyed?

JC: Ltd expts at LANL have been done on SO_x & NO_x reduction.

[illegible]: We want to demo we can build a reliable tech.

V.P. Interested in input & output waste as a community person. Appr fact that they are serious about what-

is put in and what comes out.
Middle reactor portion of system very interesting.

Ct. ask

~~APRI~~ = EPRI Electric Power Research Inst.

~~GRETA~~ = CRADA Commercial Res + Develop Agreement.

Jody ⇒ This type of facility pretty expensive and cells can be assembled in NM ∴ we have in NM people that can be useful for small businesses that may make power supplies & treatment techs.

LR can " for large also. JC

Have had 10 indus. concerns w/ proposals for building indus. parks in lab premises...

LR = Lou Rosocha

V.P = Victoria Parrill

CM = Craig Mello

JC = John Coogan

PTO for ET Process

RD4 D2 — Hydrothermal Processing: —

Richard Oldenberg (R.O)

2T = Hot water
Incin. & PBR
→ Is an altern. 300°C–600°C p

Done in hot, pressurized H_2O

Industry names { wet air oxid
Supercrit air oxid"

Commercial Appl - trt of Sewage Sludge since 70's. Texaco in Tx
will treat H_2O that contains organics.

LANL plans to apply this to high risk Explosive waste streams from explosives & propellants that get dissolved in water & so we get contaminated water

Mixed wastes to get rid of the contaminants w/ pyrthousands constituents

2 gallons of liquid: Pipe 30' long
waste in pipe, pipe heated, O_2 pumped in.
Adv: Work at low °ts; $C \rightarrow CO_2$ no byPr.
$N \rightarrow N_2$ (molecular)
and no nitric compds that are
Note

normally formed at high temps.

Question: CM: Is the H_2O supercritical or just hot. Closed system

RO – Super cr. :: Cr. H_2O = 374 °F

2T process 300-600 degrees.

This tech has not been demonstrated in the lab on real or actual waste streams. They LANL have an creator.

* P = 3000 – 15000 psi. work best around 5000 psi, 600°C

General Atomics (w/ Thiokol & Hercules)

Use Alternative to destroy rocket motors, (instead of open-burning them).

Treat w/ high P water jet to breakdown, then run through 2T process to destroy the waste stream giving CO_2 and N_2.

Have Creitler w/ NMSU & EER to destroy municipal wastes that can be recycled (bottles, paper taken off, the carbon compds made into slurry to produce net power generation

Renewable Energy part of DOE will be funded by DOE.

* Oil industry has developed pumps

that can handle these high Pressures.

At Lower Press - chemistry slower.

Future is much more adv. => less material at

V.P. - Will be analyzing what's in the cylinder & back at end?

R.O.: Yes; ~~They will~~ Heat capacity of H2O changes

CM: Heat & Power input formally a concern for energy waste if applied to industry

R.O for dilute stuff - biodeprly bugs.

current-project - intermediate stuff.

Aim of 2T } Solely for explosive waste to get rid of the Organics and Nitrate Salts → CO_2 & N_2

Rate = 2 gallons/hour explosive waste w/ 2T t°C = 600°

P = 5000 psi.

The systems are compact nothing 'cause they can fit in back of a semi w/ capacity of 8/8t = 10000 gal/day.

Commercial: Sewage Sludge. Interest is w/ more exotic wastes ie mixed & explosives. Cellulose would be a good energy source. Cl_2 if produced will be neutralized by adding NaOH into the syst for in-situ neutralization *

Lots of energy being wasted in landfills.

CM: ~ Looked at in other countries.

RO: Not much interest abroad but Lawrence Livermore also looking at this.

Industry - Echo West building plant for Texaco in TX - cont'd water streams.

VP: - Garbage is interesting & getting rid of it is worth thinking about/-". Don't you LANL want a Pub hearing for more ⊕ input?

LR. BH: to VP put in writing what your comment impressions were & let HRMB have it to proceed w/ det^n of permits.

Jody - No - would cost LANL & HRMB lots $ and time

CM: Public perception is - this is the type of job that Labs should be doing, moving away from the defense issues.

BH

PUBLIC MEETING AT HAZARDOUS AND RADIOACTIVE MATERIALS BUREAU
525 MARQUEZ CAMINO DE LOS MARQUEZ, SANTA FE

MARCH 11, 1994

NAME	ORGANIZATION	PHONE NUMBER
Cornelius Amindyas	NMED/HRMB	(505) 827-4308
John Coogan	LANL CST-6	505 665-0186
W.H. McCulla	LANL CST-DO	(505) 667-2148
H.L. "Jody" Plum	SCIENTECH (DOE/LAAO)	(505) 665-5042
Tony Grieggs	LANL ESH-8	(505) 665-0451
Richard Oldenburg	LANL CST-4	(505) 667-2096
Alice Baker	LANL ESH-8	(505) 667-0820
Louis Rosocha	LANL/CST-6	(505) 667-8493
Victoria Kimball	Community	471-2885
Greg Mello	LASG	820-7822
Barbara Hoditschek	NMED/HRMB RCRA Permits	827-4308

PUBLIC COMMENTS AND NMED LETTERS ACKNOWLEDGING RECEIPT OF THE COMMENTS ON RD&D DRAFT PERMIT, DOE/LANL PACKED-BED REACTOR/SILENT DISCHARGE PLASMA UNIT

State of New Mexico
ENVIRONMENT DEPARTMENT
Harold Runnels Bulding
1190 St. Francis Drive, P.O. Box 26110
Santa Fe, New Mexico 87502
(505) 827-2850

BRUCE KING
GOVERNOR

JUDITH M. ESPINOSA
SECRETARY

RON CURRY
DEPUTY SECRETARY

December 16, 1993

Ms. Victoria Parrill
900 Calle Carmelita
Santa Fe, New Mexico 87501

RE: Comments on the Research, Development and Demonstration (RD&D1 and RD&D2) draft Permits

Dear Ms. Parrill,

This is to acknowledge receipt of your comments that were received on December 15, 1993 regarding the Los Alamos National Laboratory Research, Development and Demonstration Hydrothermal Processing unit and the Packed-Bed Reactor/Silent Discharge Plasma (RD&D1 and RD&D2) draft Permits. Your comments that "before approval may be given, the DOE must produce a full environmental impact statement and hold public hearings to receive and respond to public concerns" will be considered by the New Mexico Environment Department during the final determination of both draft Permits.

If you have further questions concerning this issue, you may contact Mr. Cornelius Amindyas of my staff at (505) 827-4308.

Sincerely,

Barbara Hoditschek

Barbara Hoditschek, Manager
RCRA Permits Program
Hazardous and Radioactive Materials Bureau

Enclosures

cc: File Red, 1993

From: Victoria Parrish
900 Calle Carmelita
Santa Fe NM 87501

Att: Carl Stubbs

Comments re:

Draft Research, Development & Demonstration permit LANL Hydrothermal Processing Unit.

Before approval might be given the DOE should produce a full environmental impact statement and hold public hearings to receive and respond to public concerns.

From: Victoria Parrish
900 Calle Carmelita
Santa Fe NM 8750

Att: Cornelius Amindyas

Comments re:

Research, Development & Demonstration Experiment (PBR/SDP) unit.

Before approval may be given, the DOE must produce a full environmental impact statement and hold public hearings to receive and respond to public concerns.

State of New Mexico
ENVIRONMENT DEPARTMENT
Harold Runnels Building
1190 St. Francis Drive, P.O. Box 26110
Santa Fe, New Mexico 87502
(505) 827-2850

BRUCE KING
GOVERNOR

JUDITH M. ESPINOSA
SECRETARY

RON CURRY
DEPUTY SECRETARY

January 5, 1994

Mr. Thomas S. Sandford
1277 47th Street
Los Alamos, New Mexico 87544

RE: Comments on the Research, Development and Demonstration Packed-Bed Reactor/Silent Discharge Plasma (RD&D1) draft Permit

Dear Mr. Sandford,

This is to acknowledge receipt of your letter and comments of December 22, 1993 regarding the Los Alamos National Laboratory (LANL) Research, Development and Demonstration Packed-Bed Reactor/Silent Discharge Plasma (PBR/SDP) Unit draft Permit. Your support for the planned experiment by LANL will be considered by the New Mexico Environment Department during the final determination of the draft Permit, when all public comments are considered in formulating the decision to issue or deny a Permit.

If you have further questions concerning this issue, you may contact Mr. Cornelius Amindyas of my staff at (505) 827-4308.

Sincerely,

Barbara Hoditschek

Barbara Hoditschek, Manager
RCRA Permits Program
Hazardous and Radioactive Materials Bureau

cc: File Red, 1994

December 27, 1992

Ms. Barbara Hoditschek
Program Manager
NMED

Dear Ms. Hoditschek:

I would like to comment on the Draft Permit for the DOE/LANL R D&D experiment at the FBR/SDP Unit.

I believe that research with such a unit is long overdue. I think it may prove to be a very good way to deal with hazardous waste, in an overall systems approach that considers, among other things, cost to incinerate, reduction in waste volume, and abuse to the environment. We absolutely must do something in this state and this country besides storing wastes temporarily above ground, and this project might be of great assistance.

I therefore strongly support the issuance of a permit for this experiment. Other than living in Los Alamos, and working for LANL, I have no vested monetary interest in the experiment. I just think it is a good idea to gather the data in a safe manner.

Sincerely

Thomas Sandford
1277 41st St.
Los Alamos, NM 87544

UNITED STATES ENVIRONMENTAL PROTECTION AGENCY
REGION 6
1445 ROSS AVENUE, SUITE 1200
DALLAS, TX 75202-2733

File Ref LANL

RECEIVED HAZARDOUS WASTE PROGRAM DEC 1993

DEC 14 1993

Ms. Barbara Hoditschek
RCRA Permits Program Manager
Hazardous and Radioactive Materials Bureau
New Mexico Environment Department
525 Camino De Los Marquez
P.O. Box 26110
Santa Fe, New Mexico 87502

Re: Research Development and Demonstration Draft Permit
Packed-Bed Reactor/Silent Discharge Plasma unit
Los Alamos National Laboratory, NM0890010515

Dear Ms. Hoditschek:

Enclosed are the comments made by the Environmental Protection Agency (EPA) on the draft permit for the Packed-Bed Reactor/Silent Discharge Plasma (PBR/SDP) unit which will be used in experimental destruction of hazardous waste generated at Los Alamos National Laboratory. Should you have any questions on these comments, please contact Barbara Driscoll at (214) 655-7441.

Sincerely,

David Neleigh, Chief
New Mexico/Federal Facilities Section
RCRA Permits Branch (6H-PN)

Enclosure

Printed on Recycled Pape

COMMENTS

1. Upon completion of this Research, Development and Demonstration (RD&D) project should Los Alamos National Laboratory decide to permit a permanent PDB/SDP unit it will need to be permitted as an incinerator under 40 CFR 264 Subpart O and should also meet the requirements of EPA's Combustion Strategy.

2. In addition, the permit regulatory limits in Subpart O need to include, but are not limited to the following items:

a. What parameters need to be measured to ensure that the waste feed cuts off if the unit is not operating within specifications?

b. The amount and type of anticipated emissions need to be defined. How will LANL know when complete combustion has occurred. These parameters need to be defined.

3. On page A3, the indented paragraph on monitoring indicates that monitoring could be operated continuously during the RD&D experiments, but it may not be necessary. Monitoring should be continuous or else there is no way to determine if the process is stable or not. EPA is concerned that if monitoring is not continuous then the waste material is being burned for destruction purposes and not RD&D.

4. There are two typos on page C2, second paragraph, sentences 3 and 5 do not start with capital letters.

5. On page C8, under the section entitled,"Objective", paragraph three indicates that the wastes in storage at LANL are described in Attachment 11. There is no Attachment 11 in the permit.

State of New Mexico
ENVIRONMENT DEPARTMENT

JUDITH M. ESPINOSA
SECRETARY

RON CURRY
DEPUTY SECRETARY

BRUCE KING
GOVERNOR

AIR QUALITY BUREAU

Harold Runnels Building
1190 St. Francis Drive, P.O. Box 26110
Santa Fe, New Mexico 87502
(505) 827-0070

BH
To Cornelius
File

January 5, 1994

CERTIFIED MAIL NO. P 108 733 324
RETURN RECEIPT REQUESTED

Tony Grieggs
Staff Member
Los Alamos National Laboratory
Mailstop K-490
P.O. Box 1663
Los Alamos, NM 87545

Ref: FACT SHEET on Los Alamos National Laboratory PBR/SDP Unit experiment
Sub: Possible Air Quality Permit Requirement for PBR/SDP Unit

Dear Mr. Grieggs:

This letter is in regarding the U.S. Department of Energy (DOE)/Los Alamos National Laboratory (LANL) for Research, Development and Demonstration experiment at the Packed-Bed Reactor/Silent Discharge Plasma (PBR/SDP) Unit.

The unit description given in the NMED Hazardous and Radioactive Materials Bureau fact sheet states that, there will be some air pollutants emitted from this experimental source.

Please note an air quality permit may be required for this experimental source if any of the following are applicable:

1) the emission rate of any one regulated air pollutant (nitrogen oxides, carbon monoxide, non-methane hydrocarbons, total suspended particulate, sulfur dioxide) is greater than 10 pounds per hour or 25 tons per year, or

2) the emission rate of Lead is greater than 5 tons per year, or

3) any toxic air pollutant listed in the AQCR 702, Part Three Appendix A which exceeds the corresponding emission rate shown in pounds per hour.

New Mexico
DRUG FREE
It's a State of Mind!

It is very important to estimate the type and amount of all possible air pollutants from this source to determine whether an air quality permit is required.

A general air quality permit application is enclosed with this letter. Please estimate all possible air pollutants from this experiment and indicate the maximum emission rates of each pollutant in the enclosed application and submit to our Department for review.

For your information a copy of AQCR 702 and AQCR 700 are enclosed with this letter which explains the permit requirement determination procedure, and required permit fee.

AQCR 702, Part Two A.4 states that "for all sources subject to this regulation, applications for permits shall be filed prior to the commencement of the construction, modification, or installation. Regardless of the anticipated commencement date, no construction, modification or installation shall begin prior to issuance of the permit".

If you have any questions, please call me in Santa Fe at (505) 827-2412.

Sincerely,

Balwanth Reddy Gudoor
Environmental Engineer
Technical Analysis and Permits Section
Air Pollution Control Bureau

Enclosures: 1) General air quality permit application
2) A copy of AQCR 702 (explains permit applicability)
3) A copy of AQCR 700 (explains permit fee requirements)

xc: Barbara Hoditschek, Hazardous and Radioactive Materials Bureau, NMED

State of New Mexico
ENVIRONMENT DEPARTMENT
Harold Runnels Building
1190 St. Francis Drive, P.O. Box 26110
Santa Fe, New Mexico 87502
(505) 827-2850

BRUCE KING
GOVERNOR

JUDITH M. ESPINOSA
SECRETARY

RON CURRY
DEPUTY SECRETARY

December 17, 1993

Ms. Kathy Tolman, President
League of Women Voters of Santa Fe
440 Cerrillos Road
Suite G
Santa Fe, New Mexico 87501

RE: Comments on the Research, Development and Demonstration Hydrothermal Processing Unit(RD&D2) draft Permit

Dear Ms. Tolman,

This is to acknowledge receipt of your letter and comments of November 22, 1993 regarding the Los Alamos National Laboratory (LANL) Research, Development and Demonstration Hydrothermal Processing unit draft Permit. Your comments and concern about Operator safety with reference to the physico-chemical properties and characteristics of equipment to be used in the experiment by LANL will be considered by the New Mexico Environment Department during the final determination of the draft Permit.

If you have further questions concerning this issue, you may contact Mr. Cornelius Amindyas of my staff at (505) 827-4308.

Sincerely,

Barbara Hoditschek, Manager
RCRA Permits Program
Hazardous and Radioactive Materials Bureau

cc: File Red, 1993

LEAGUE OF WOMEN VOTERS OF SANTA FE COUNTY

440 Cerrillos Road Suite G Santa Fe, New Mexico 87501

Dawn Cornelius

November 22, 1993

RECEIVED 1993 HAZARDOUS WASTE PROGRAM

Ms. Barbara Hoditschek
Program Manager, RCRA Permit Section
Hazardous and Radioactive Materials Bureau
State of New Mexico Environment Department
P.O. Box 26110
Santa Fe, NM 87502

Subject: **Draft Research , Development, and Demonstration Permit for the LANL Hydrothermal Processing Unit, EPA I.D. No. NM0890010515**

Dear Ms. Hoditschek:

Thank you for your notice of October 20, 1993, on the subject Draft Permit. I understand that this technology promises to be an alternative to incineration for reactive hazardous organics.

Operator safety is a concern that must be addressed. ASME design criteria must be applied to prevent accidents and potential exposure of workers and the environment.

Corrosion and erosion of the reactor and other components must be addressed. Corrosion can cause catastrophic failure of the reactor and should be controlled by limiting exposure of the pressure containment to oxygen and flames. Erosion can cause similar problems for high-velocity flow, particularly if solids are present.

LANL should make this facility a Designated User Facility as recommended by the LANL Environmental Restoration/Waste Management Program office, to allow participation by private industry in development and commercialization of this promising technology.

These recommendations will help to protect workers and the environment, in addition to enhancing LANL's participation in business development for New Mexico.

Sincerely yours,

Kathy Tolman

Kathy Tolman
President

Cy:
Ernie Daman, Past President, ASME, c/o FWDC, FAX (201) 535-2242

Los Alamos
Los Alamos National Laboratory
Los Alamos, New Mexico 87545

memorandum

TO: Tony Griegge, EM-8

DATE: Wed, Dec 15, 1993

FROM: Richard Oldenborg

MAIL STOP/TELEPHONE: J567 / 7-2096

SYMBOL: CST-4-U-93:28

SUBJECT: **Questions concerning RD&D permit application**

Regarding the issues mentioned in the letter from Ms. Kathy Tolman of the League of Women Voters of Santa Fe County concerning the hydrothermal process, I would like to offer the following responses:

1. "Operator safety is a concern that must be addressed. ASME design criteria must be applied to prevent accidents and potential exposure of workers and the environment."

Operator safety and protection of the environment are primary concerns of the RD&D unit operations. Several features of the RD&D unit design are worth noting with regard to this concern:

- ASME design criteria were applied throughout the unit design.
- Because the reaction rates are relatively rapid, the required residence time at temperature and pressure is short (roughly 10 seconds). Consequently, the reactor volume (and therefore the amount of waste) that is at full temperature and pressure at any one time is fairly small. This helps to minimize the consequences of any failure or accident.
- Because the reactor volume is small, secondary confinement of the reactor is readily accomplished.
- The unit is operated remotely from a separate control room. No one is allowed near the unit during operation.

2. "Corrosion and erosion of the reactor and other components must be addressed."

Some of the waste streams to be tested in the RD&D unit are considered to be reactive and corrosive. The long term reliability of the reactor tube and the associated hardware has a direct impact on the safety and economic viability of the hydrothermal process. Minimizing the corrosion of system components is therefore an important consideration in the unit design. Numerous tests have been conducted in bench-scale corrosion test units to help identify the appropriate construction materials. Based on the

results of these tests, we believe that corrosion will not be a significant issue for the selected waste streams. However, some forms of corrosion, such as stress induced corrosion, are difficult to evaluate in limited scale testing. Furthermore, the RD&D unit will be operated for longer periods of time then previous tests. Consequently, we intent to frequently inspect the RD&D unit for any indication of corrosion.

Erosion can also cause similar problems in high velocity flows. However, the flow rates in the RD&D unit are relatively low, and erosion should have a minimal impact.

3. "LANL should make this facility a Designated User Facility..."

The concept of making the RD&D unit, along with several bench-scale hydrothermal processing units, a Designated User Facility is under discussion. While first priority would have to be given to the sponsors of our program, some time could probably be scheduled for industrial collaborations and these interactions could be very beneficial to both industry and LANL. However, no final decision has yet been made.

State of New Mexico
ENVIRONMENT DEPARTMENT
Harold Runnels Bulding
1190 St. Francis Drive, P.O. Box 26110
Santa Fe, New Mexico 87502
(505) 827-2850

BRUCE KING
GOVERNOR

JUDITH M. ESPINOSA
SECRETARY

RON CURRY
DEPUTY SECRETARY

December 6, 1993

Mr. Thomas B. French
HC 68 Box 139
Taos, New Mexico 87571

RE: Comments on TA-40 Closure Plan and on the Research, Development and Demonstration (RD&D2) draft Permit

Dear Mr. French,

This is to acknowledge receipt of your comments of November 9, 1993 regarding the Closure Plan of the Los Alamos National Laboratory (LANL) TA-40 and the RD&D2 draft Permit. Your comments indicating your support for the closure of the LANL TA-40 Scrap Detonation site and your opposition to the construction and operation of the proposed hydrothermal unit will be considered by the New Mexico Environment Department during the final determination of both the Closure Plan and the draft Permit.

The answers to your request for information regarding the amount of water being used to treat the two gallons of hazardous waste per hour and what contamination remains in the effluent from the plant are found on the enclosed two pages.

If you have further questions concerning this issue, you may contact Mr. Cornelius Amindyas of my staff at (505) 827-4308.

Sincerely,

Barbara Hoditschek

Barbara Hoditschek, Manager
RCRA Permits Program
Hazardous and Radioactive Materials Bureau

Enclosures

cc: File Red, 1993

State of New Mexico
ENVIRONMENT DE
Harold Runnels B
1190 St. Francis Drive, P
Santa Fe, New Mexi
(505) 827-285

BRUCE KING
GOVERNOR

Please send me information regarding the amount of water being used to treat the 2 gallons of hazardous waste per hour. Also, what contamination remains in the effluent from the plant?

RECEIVED NOV 1

October 20, 1993

Dear Concerned Citizen:

Enclosed is a Fact Sheet regarding a Draft Research, Development, and Demonstration Permit that the New Mexico Environment Department (NMED) proposes for the Department of Energy (DOE)/Los Alamos National Laboratory (LANL) Hydrothermal Processing Unit.

Copies of the Draft Permit are available for review at the offices of the NMED Hazardous and Radioactive Materials Bureau, P.O. Box 26110, 525 Camino de los Marquez, Santa Fe, New Mexico 87502 between the hours of 8:00 AM and 5:00 PM, and at the Environmental Restoration Community Reading Room, 1450 Central Avenue, Suite 101, Los Alamos, New Mexico. Call the Reading Room for business hours.

If you wish to make comments on this Draft Permit, they must be in writing and be received by the NMED Hazardous and Radioactive Materials Bureau at the address mentioned above no later than **December 15, 1993.**

If you have any questions regarding this Draft Permit, please contact Mr. Carl Stubbs of my staff at (505) 827-4308 or at the Santa Fe address given above.

I am in opposition to the construction and operation of the LANL Hydrothermal Processing Unit.

Sincerely,

Barbara Hoditschek

Barbara Hoditschek
Program Manager
RCRA Permit Section
Hazardous and Radioactive Materials Bureau

THOMAS B. FRENCH
HC 68 BOX 139
TAOS, NEW MEXICO 87571
(505) 758-3827

11/9/93

Enclosure.

xc: File Red

I support the closing of the Los Alamos National Laboratory TA-40 Scrap Detonation Site in Los Alamos, New Mexico. Precautions should be taken to prevent this kind of contamination in the future.

Sincerely, Thomas B. French

THOMAS B. FRENCH
HC 68 BOX 139
TAOS, NEW MEXICO 87571
(505) 758-3827

State of New Mexico
ENVIRONMENT DEPARTMENT
Harold Runnels Building
1190 St. Francis Drive, P.O. Box 26110
Santa Fe, New Mexico 87502
(505) 827-2850

BRUCE KING
GOVERNOR

JUDITH M. ESPINOSA
SECRETARY

RON CURRY
DEPUTY SECRETARY

October 20, 1993

Dear Concerned Citizen:

Enclosed is a fact sheet regarding a closure plan modification that the New Mexico Environment Department (NMED) received from the Department of Energy (DOE)/Los Alamos National Laboratory (LANL) for final closure of a hazardous waste thermal treatment unit. The thermal treatment unit is located in Technical Area 40, Scrap Detonation Site. The thermal treatment unit is operating under interim status. Interim status was granted to those facilities in operation prior to the effective date of the regulations.

Copies of the closure plan modification are available for review at the offices of the NMED Hazardous and Radioactive Materials Bureau, P.O. Box 26110, 525 Camino de los Marquez, Santa Fe, New Mexico 87502 and at the Environmental Restoration Community Reading Room, 1450 Central Avenue, Suite 101, Los Alamos, New Mexico 87544.

If you wish to make comments on this closure plan modification, they must be in writing and be received by the NMED Hazardous and Radioactive Materials Bureau at the address mentioned above no later than **November 30, 1993.**

If you have any questions regarding this closure plan modification, please contact Carl Stubbs of my staff at (505) 827-4308 or at the Santa Fe address given above.

Sincerely,

Barbara Hoditschek

Barbara Hoditschek
Program Manager
RCRA Permit Section
Hazardous and Radioactive Materials Bureau

11/9/93

Enclosure.

xc: File Red

I support the closing of the Los Alamos National Laboratory TA-40 Scrap Detonation Site in Los Alamos, New Mexico. Precautions should be taken to prevent contamination and environmental and health hazards in the future.

Sincerely

THOMAS B. FRENCH
HC 68 BOX 139
TAOS, NEW MEXICO 87571
(505) 758-3827

Los Alamos
Los Alamos National Labor
Los Alamos, New Mexico 87

memorandum

Tony Grieggs, EM-8 DATE: Thu, Dec 2, 1993

FROM: Richard Oldenborg MAIL STOP/TELEPHONE: J567 / 7-2096

SYMBOL: CST-4-U-93:22

Questions concerning RD&D permit application

Regarding the questions that the State forwarded to you concerning the hydrothermal process, I would like to offer the following responses:

1. How much water is being used to treat 2 gal. of hazardous waste per hour?

The Hydrothermal Process involves the destruction of hazardous wastes in water a high pressures and temperatures. In order for the process to be effective, the feed stre must have a large component (> 70 %) of water. If the waste to be treated was highly concentrated, water would have to be added to dilute the feed stream to an appropriate concentration. However, the wastes to be treated by the RD& relatively dilut and are already at least 90 % water. The exact composition of the stes is discus in detail in Section 3.1 of the RD&D permit application. Consequently, these wastes be fed directly into the Hydrotherma s unit and no additional water will have added in order to process the waste.

Prior to treating wastes, the process unit will be operated using pure water approximately one half hour to ensure proper operation of system component start-up operation will require approximately 0.5 gallons of water. Furthermore completion of an experiment, an addition 0.5 gallons of water will be required residual fluid from the unit.

In addition to the water in the process stream, the RD&D unit also uses wa coolant. The effluent stream from the process unit flows through a heat exche reduce its temperature to near ambient. The heat exchanger on the RD&D uni require up to approximately 1 gallon/minute of cooling water. Because this is large flow of water, this requirement is supplied by a closed-cycle recirculation

To summarize the water usage for a typical 8-hour day, roughly 12 gallon waste will be treated using a total of 1 gallon of water for start up and shut down operations, and 480 gallons of cooling water will be supplied from a closed-cycle recirculation system.

2. What contamination remains in the effluent from the plant?

The Hydrothermal Processing unit is expected to easily destroy all of the compounds in the waste stream, and no measurable quantity of the original waste compounds is expected in the effluents. Our ultimate goal is to produce a gaseous effluent that contains only carbon dioxide and molecular nitrogen, and a pure liquid water effluent. However, some oxidation by-products could be formed in the process and remain in the effluent streams. The composition of the effluent from the process unit will vary depending on the exact composition of the waste being treated and on the operating conditions of the unit.

Regarding the gaseous effluent, no other carbon products are expected in addition to the carbon dioxide. In particular, no carbon monoxide has ever been observed in our laboratory experiments. However, in addition to the molecular nitrogen (N_2), small amounts of nitrous oxide (N_2O) could be produced. While nitrous oxide, or "laughing gas," is not considered to be hazardous, further treatment of the gaseous effluent may be required if significant amounts are produced.

Regarding the liquid water effluent, trace amounts of carbon [illegible] nitrogen products are likely to remain in the effluent stream. It is expected that the liquid effluent could contain a few parts-per-million (ppm) of organic carbon, which is in relatively [illegible] forms such as oxylates, formates, and acetates. Small amounts of carbon may also be present in inorganic forms, primarily as carbonate salts. In addition, it is expected that a small amount of the nitrogen in the waste could be converted to nitrates and nitrites. The objective for the nitrogen compounds is to produce an effluent that meets federal and state drinking water standards, i.e., total nitrate and nitrite < 10 ppm (by weight). Based on the results from smaller scale laboratory experiments, we are confident that these objectives for carbon and nitrogen by-products can be achieved. However, this may not be achieved in every experiment. Part of the motivation for these RD&D experiments is to test the process on a variety of actual wastes, and also to evaluate the robustness of the hydrothermal process to variations in operating conditions. Only if all of these experiments will meet the desired destruction objectives.

For all experiments covered by the RD&D permit, all the effluents will be [illegible] and completely analysed for residual contamination. All liquid effluents will be [illegible] by either the Waste Management Group (EM-7) or the Fabrication and Assembly [illegible] (WX-3) for subsequent storage, treatment, and/or disposal. No direct released to the environment of the liquid effluents from the RD&D unit will be conducted.

Los Alamos
Los Alamos National Laboratory
Los Alamos, New Mexico 87545

memorandum

TO: Tony Grieggs, EM-8

DATE: Thu, Dec 2, 1993

FROM: Richard Oldenborg

MAIL STOP/TELEPHONE: J567 / 7-2096

SYMBOL: CST-4-U-93:22

SUBJECT: **Questions concerning RD&D permit application**

Regarding the questions that the State forwarded to you concerning the hydrothermal process, I would like to offer the following responses:

1. How much water is being used to treat 2 gal. of hazardous waste per hour?

The Hydrothermal Process involves the destruction of hazardous wastes in water at high pressures and temperatures. In order for the process to be effective, the feed stream must have a large component (> 70 %) of water. If the waste to be treated was highly concentrated, water would have to be added to dilute the feed stream to an appropriate concentration. However, the wastes to be treated by the RD&D unit are relatively dilute and are already at least 90 % water. The exact composition of these wastes is discussed in detail in Section 3.1 of the RD&D permit application. Consequently, these wastes can be fed directly into the Hydrothermal Process unit and no additional water will have to be added in order to process the waste.

Prior to treating wastes, the process unit will be operated using pure water for approximately one half hour to ensure proper operation of system components. This start-up operation will require approximately 0.5 gallons of water. Furthermore, at the completion of an experiment, an addition 0.5 gallons of water will be required to flush any residual fluid from the unit.

In addition to the water in the process stream, the RD&D unit also uses water as a coolant. The effluent stream from the process unit flows through a heat exchanger to reduce its temperature to near ambient. The heat exchanger on the RD&D unit can require up to approximately 1 gallon/minute of cooling water. Because this is a relatively large flow of water, this requirement is supplied by a closed-cycle recirculation system.

To summarize the water usage for a typical 8-hour day, roughly 12 gallons of liquid waste will be treated using a total of 1 gallon of water for start up and shut down operations, and 480 gallons of cooling water will be supplied from a closed-cycle recirculation system.

2. What contamination remains in the effluent from the plant?

The Hydrothermal Processing unit is expected to easily destroy all of the compounds in the waste stream, and no measurable quantity of the original waste compounds is expected in the effluents. Our ultimate goal is to produce a gaseous effluent that contains only carbon dioxide and molecular nitrogen, and a pure liquid water effluent. However, some oxidation by-products could be formed in the process and remain in the effluent streams. The composition of the effluent from the process unit will vary depending on the exact composition of the waste being treated and on the operating conditions of the unit.

Regarding the gaseous effluent, no other carbon products are expected in addition to the carbon dioxide. In particular, no carbon monoxide has ever been observed in our laboratory experiments. However, in addition to the molecular nitrogen (N_2), small amounts of nitrous oxide (N_2O) could be produced. While nitrous oxide, or "laughing gas," is not considered to be hazardous, further treatment of the gaseous effluent may be required if significant amounts are produced.

Regarding the liquid water effluent, trace amounts of carbon and nitrogen by-products are likely to remain in the effluent stream. It is expected that the liquid effluent could contain a few parts-per-million (ppm) of organic carbon, which is in relatively benign forms such as oxylates, formates, and acetates. Small amounts of carbon may also be present in inorganic forms, primarily as carbonate salts. In addition, it is expected that a small amount of the nitrogen in the waste could be converted to nitrates and nitrites. Our objective for the nitrogen compounds is to produce an effluent that meets federal and state drinking water standards, i.e., total nitrate and nitrite < 10 ppm (by weight as N). Based on the results from smaller scale laboratory experiments, we are confident that these objectives for carbon and nitrogen by-products can be achieved. However, they may not be achieved in every experiment. Part of the motivation for these RD&D experiments is to test the process on a variety of actual wastes, and also to evaluate the robustness of the hydrothermal process to variations in operating conditions. Clearly not all of these experiments will meet the desired destruction objectives.

For all experiments covered by the RD&D permit, all the effluents will be collected and completely analysed for residual contamination. All liquid effluents will be collected by either the Waste Management Group (EM-7) or the Fabrication and Assembly Group (WX-3) for subsequent storage, treatment, and/or disposal. No direct releases to the environment of the liquid effluents from the RD&D unit will be conducted.

State of New Mexico
ENVIRONMENT DEPARTMENT
Harold Runnels Bulding
1190 St. Francis Drive, P.O. Box 26110
Santa Fe, New Mexico 87502
(505) 827-2850

BRUCE KING
GOVERNOR

JUDITH M. ESPINOSA
SECRETARY

RON CURRY
DEPUTY SECRETARY

December 16, 1993

Ms. Victoria Parrill
900 Calle Carmelita
Santa Fe, New Mexico 87501

RE: Comments on the Research, Development and Demonstration (RD&D1 and RD&D2) draft Permits

Dear Ms. Parrill,

This is to acknowledge receipt of your comments that were received on December 15, 1993 regarding the Los Alamos National Laboratory Research, Development and Demonstration Hydrothermal Processing unit and the Packed-Bed Reactor/Silent Discharge Plasma (RD&D1 and RD&D2) draft Permits. Your comments that "before approval may be given, the DOE must produce a full environmental impact statement and hold public hearings to receive and respond to public concerns" will be considered by the New Mexico Environment Department during the final determination of both draft Permits.

If you have further questions concerning this issue, you may contact Mr. Cornelius Amindyas of my staff at (505) 827-4308.

Sincerely,

Barbara Hoditschek

Barbara Hoditschek, Manager
RCRA Permits Program
Hazardous and Radioactive Materials Bureau

Enclosures

cc: File Red, 1993

Att: Carl Stubbs

From: Victoria Parrish
900 Calle Carmelita
Santa Fe NM 87501

Comments re:

Draft Research, Development & Demonstration permit LANL Hydrothermal Processing Unit.

Before approval might be given, the DOE should produce a full environmental impact statement and hold public hearings to receive and respond to public concerns.

Att: Cornelius Amindyas

From: Victoria Parrish
900 Calle Carmelita
Santa Fe NM 87505

Comments re:

Research, Development & Demonstration Experiment (PBR/SDP) unit.

Before approval may be given, the DOE must produce a full environmental impact statement and hold public hearings to receive and respond to public concerns.

UNITED STATES ENVIRONMENTAL PROTECTION AGENCY
REGION 6
1445 ROSS AVENUE, SUITE 1200
DALLAS, TX 75202-2733

JAN 06 1994

JAN 6 1994

1994 JAN RECEIVED HAZARDOUS WASTE

Ms. Barbara Hoditschek
RCRA Permits Program Manager
Hazardous and Radioactive Materials Bureau
New Mexico Environment Department
525 Camino De Los Marquez
P.O. Box 26110
Santa Fe, New Mexico 87502

Re: Research Development and Demonstration Draft Permit
Hydrothermal Processing Unit
Los Alamos National Laboratory, NM0890010515

Dear Ms. Hoditschek:

The Environmental Protection Agency (EPA) has reviewed and has no comments on the draft permit for the Hydrothermal Processing unit which will be used in experimental destruction of hazardous waste generated at Los Alamos National Laboratory. Should you have any questions, please contact at (214) 655-7441.

Sincerely,

Barbara Driscoll

Barbara Driscoll, Environmental Geologist
New Mexico/Federal Facilities Section
RCRA Permits Branch (6H-PN)

Printed on Recycled Paper

March 10, 1994

OPEN LETTER TO
THE UNITED STATES DEPARTMENT OF ENERGY
LOS ALAMOS NATIONAL LABORATORIES
NEW MEXICO ENVIRONMENT DEPARTMENT

Applications of scientific technology to community problems is a positive use of resources. Two projects under way in the Chemical and Laser Sciences Division of LANL are fine examples of work with a constructive perspective on the future. The Silent Discharge Plasma Reactor and the Hydrothermal Processing Unit projects have potential for not only cleaning up polluting substances that Los Alamos has generated, but for helping other communities improve their environments as well.

I commend these projects and the people involved who acknowledge accountability for more than an elegant scientific procedure: resources required on the front end to fuel the process, safety and efficiency factors, end products, and human as well as environmental impacts. It is easier to concentrate on electrons, but we know, finally, that it is the other factors that make a difference to quality of life.

Los Alamos National Laboratories has great potential for being a good neighbor and a national resource. Please keep up the good work of leaving the world cleaner than it has been and finding positive alternatives to radioactive waste generation.

Sincerely,

Victoria Parrill

Victoria Parrill
900 Calle Carmelita
Santa Fe, NM 87501

March 10, 1994

MAR 1994
RECEIVED
HAZARDOUS WASTE
PROGRAM

Barbara Hoditschek
New Mexico Environment Department
Bureau of Hazardous Waste

Ms. Hoditschek:

The meeting this morning at which representatives from Los Alamos National Labs, Department of Energy and the NM ED has answered my concerns regarding the one year permits requested for the two RD&D projects we discussed. I withdraw my request for a public hearing on the matter.

Thank you for your cooperation. Public concerns regarding activities in Los Alamos are not necessarily fault finding with anyone, but rather are a source of strength as the scientific community moves forward with constructive applications of technology. Time allowed for addressing these concerns is time well spent.

Sincerely,

Victoria Parrill

Victoria Parrill
900 Calle Carmelita
Santa Fe, NM 87501

MEMORANDUM OF MEETING OR CONVERSATION

☒ TELEPHONE ☐ PERSONAL	TIME: 9:15 am	DATE: 3/16/94
ORIGINATING PARTY	OTHER PARTIES	
CORNELIUS AMINDYAS, HRMB	Ms. VICTORIA PARRILL 827-2355	

SUBJECT Letter withdrawing request for Public Hearing.

DISCUSSION I called Ms. Parrill at her work phone number and left a message on her answering machine that we (at HRMB) are still awaiting her note that she had promised during the March 11 1994 public meeting. The note/letter is an anticipated request that Ms. Parrill wishes to withdraw her earlier request for a public hearing.

CONCLUSIONS OR AGREEMENTS I left my number 827-4308 for her in case she decides to call.

DISTRIBUTION	SIGNED
cc: Barbara Hoditschek, RCRA Program Manager.	

State of New Mexico
ENVIRONMENT DEPARTMENT
Harold Runnels Building
1190 St. Francis Drive, P.O. Box 26110
Santa Fe, New Mexico 87502
(505) 827-2850

BRUCE KING
GOVERNOR

JUDITH M. ESPINOSA
SECRETARY

RON CURRY
DEPUTY SECRETARY

Sent 11-11:15 am

FAX COVER SHEET

DATE: March 1st, 1994 (Tuesday)

TO: John Mack (DOE); Jody Plum (DOE); Tony Griegos (LANL).

COMPANY: DOE/LANL

FAX NO: 665-~~5047~~ 4504; 665-5095; 667-5224

TELEPHONE:

MESSAGE: Regarding RD&D draft Permits:

A PUBLIC MEETING HAS BEEN SCHEDULED FOR FRIDAY MARCH 11, 1994 AT 9:30 am IN THE CONFERENCE ROOM AT 525 MARQUEZ PLACE. THIS IS TO ALLOW MS. VICTORIA PARRILL, (THE PUBLIC COMMENTER WHO HAD REQUESTED THAT A PUBLIC HEARING BE HELD ON THE HYDROTHERMAL PROCESSING, AND PBR/SDP UNIT DRAFT PERMITS, PRIOR TO FINAL DETERMINATION BY NMED) TO AIR HER CONCERNS TO NMED/HRMB AND DOE/LANL.

FROM: Cornelius Amindyas

NO OF PAGES Jody 6 (Ms. Parrill's letter etc); Tony, John } 1 page
(Including cover page)

COMPANY: NEW MEXICO ENVIRONMENT DEPARTMENT
HAZARDOUS & RADIOACTIVE MATERIALS BUREAU

FAX: (505) 827-4361

TELEPHONE: (505) 827-4358

MEMORANDUM OF MEETING OR CONVERSATION

☒ TELEPHONE ☐ PERSONAL	TIME: 10:23am	DATE: 03/01/94
ORIGINATING PARTY	OTHER PARTIES	
Cornelius Amindego HKMB	Ms. Victoria Parrill	

SUBJECT Public Meeting

DISCUSSION I called Ms. Parrill's home but she was out. I then called her work place number (827-2355) and left a message that a public meeting between HKMB, Miss Parrill and DOE/LANL had be scheduled for ~~FRIDAY~~ March 11, 1994 at 9:30 - in the HKMB Conference Room at 525 Marquez Place.

CONCLUSIONS OR AGREEMENTS

She called back with

DISTRIBUTION	SIGNED

MEMORANDUM OF MEETING OR CONVERSATION

☒ TELEPHONE ☐ PERSONAL	TIME: 2:05pm	DATE: 2/28/94
ORIGINATING PARTY	OTHER PARTIES	
CORNELIUS AMINDYAS, PERMIT WRITER-NMED/HRMB	MS. VICTORIA PARRILL	

SUBJECT: MS. PARRILL'S REQUEST FOR PUBLIC HEARING ON DOE/LANL RD&D HYDROTHERMAL PROCESSING UNIT DRAFT PERMIT.

DISCUSSION

I called Victoria Parrill's home number 471-2885. She was not in according to a Certain Ms. Sarah Katz who answered the phone at the other end.

I left a message with Ms. Katz for Victoria Parrill to call either Barbara Hoditschek, RCRA Permits Program Manager, or me, to explain why she hadn't responded to the certified mail which HRMB return permit indicated she had received on February 10, 1994, because the 10 days period given to her had elapsed. Ms. Katz promised to inform Ms. Parrill to call Ms. Hoditschek or me before Thursday 3/3/94.

CONCLUSIONS OR AGREEMENTS

DISTRIBUTION

Barbara Hoditschek, Manager.

SIGNED

Department of Energy
Los Alamos Area Office
Albuquerque Operations Office
Los Alamos, New Mexico 87544

FEB 08 1994

CERTIFIED MAIL - RETURN RECEIPT REQUESTED

Barbara Hoditschek
Permit Section Coordinator
Hazardous and Radioactive
Materials Bureau
New Mexico Environment Department
525 Camino de los Marquez
P. O. Box 26110
Santa Fe, New Mexico 87502

Dear Ms. Hoditschek:

During a phone conversation on January 20, 1994, Los Alamos National Laboratory (LANL) and New Mexico Environment Department personnel discussed whether there was a need for public information meetings concerning LANL's Research, Development, and Demonstration permit applications. At the time, your staff also indicated that a single public information meeting could be arranged that would include discussions of both the Hydrothermal Process and Packed Bed Reactor/Silent Discharge Plasma experiments.

Because so few comments resulted from the public review of the permit applications, the Department of Energy and LANL have determined that no need for public information meetings exists. Therefore, we are declining the opportunity to hold public information meetings. This letter should provide adequate documentation for the administrative record.

If you have any questions, please contact Jon Mack of my staff at (505) 665-5026.

Sincerely,

Joseph C. Vozella, Chief
Environment, Safety and Health
Branch

LESH:9JM-055

cc:
See Page 2

FEB 08 1994

cc:
K. Hargis, ESH-8, LANL,
MS-K490
J. White, ESH-8, LANL,
MS-K490
J. Coogan, CST-6, LANL,
MS-E525
R. Oldenborg, CST-4, LANL,
MS-J567

State of New Mexico
ENVIRONMENT DEPARTMENT
Harold Runnels Building
1190 St. Francis Drive, P.O. Box 26110
Santa Fe, New Mexico 87502
(505) 827-2850

BRUCE KING
GOVERNOR

JUDITH M. ESPINOSA
SECRETARY

RON CURRY
DEPUTY SECRETARY

CERTIFIED MAIL
RETURN RECEIPT REQUESTED

February 9, 1994

Ms. Victoria Parrill
900 Calle Carmelita
Santa Fe, New Mexico 87501

RE: Comments on the Research, Development and Demonstration Packed-Bed Reactor/Silent Discharge Plasma (RD&D1) and the Hydrothermal Processing unit (RD&D2) draft Permits

Dear Ms. Parrill,

The New Mexico Environment Department (NMED) received your request for a public hearing on the above mentioned draft Permits proposed for the U.S. Department of Energy/Los Alamos National Laboratory (DOE/LANL). Your request for a hearing for both of these draft permits was received on December 15, 1993, during the public comment period. Your request however, failed to define the reasons as to why a public hearing should be held regarding the proposed draft Permits.

Your reasons for requesting that a public hearing should be held on these draft Permits must be recieved by NMED within ten (10) days of the receipt of this letter. Your response should include issues that NMED is able to address in the proposed RD&D draft Permits.

If you prefer, your letter may request that a meeting with you and DOE/LANL be held in order to fully respond to the concerns you may have. This is in accordance with (HWMR-7), Part IX, Section 902.A.4., (see enclosure) which states that, the NMED, acting in conjunction with the applicant, will respond to the request in an attempt to resolve the issues regarding the proposed draft Permits.

If we do not receive your response within the designated time, we must assume that your concerns are satisfied. NMED will then close the public comment period and make a final decision on the draft permit without holding a formal public hearing.

If you have any questions regarding this process, you may contact Cornelius Amindyas of my staff at (505) 827-4308.

Sincerely,

Barbara Hoditschek

Barbara Hoditschek, Program Manager
RCRA Permits
Hazardous and Radioactive Materials Bureau

Enclosure

cc: Benito Garcia, Bureau Chief, HRMB
William K. Honker, U.S. EPA Region 6
John Mack, DOE LAAO
Tony Grieggs, LANL EM-8
Tracy Hughes, OGC

602. OMISSIONS. The following provisions of 40 CFR Part 265 are omitted from Part VI of these regulations:

A. Section 265.149; and

B. Section 265.150.

PART VII - STANDARDS FOR THE MANAGEMENT OF SPECIFIC HAZARDOUS WASTES AND SPECIFIC TYPES OF HAZARDOUS WASTE MANAGEMENT FACILITIES

701. ADOPTION OF 40 CFR PART 266. The regulations of the United States Environmental Protection Agency set forth in 40 CFR Part 266, through July 1, 1992, are hereby incorporated as Part VII of the New Mexico Hazardous Waste Management Regulations.

PART VIII - LAND DISPOSAL RESTRICTIONS

801. ADOPTION OF 40 CFR PART 268. The regulations of the United States Environmental Protection Agency set forth in 40 CFR Part 268, through July 1, 1992, are hereby incorporated as Part VIII of the New Mexico Hazardous Waste Management Regulations.

PART IX - THE HAZARDOUS WASTE PERMIT PROGRAM

901. ADOPTION OF 40 CFR PART 270. The regulations of the United States Environmental Protection Agency set forth in 40 CFR Part 270, through July 1, 1992, are hereby incorporated in Part IX of the New Mexico Hazardous Waste Management Regulations.

902. PERMITTING PROCEDURES.

A. Permit Issuance or Denial.

1. Once an application is complete, the Secretary shall prepare and issue either a Draft Permit or a Notice of Intent to Deny.

a. A Draft Permit shall contain all conditions, compliance schedules, monitoring requirements and technical standards for treatment, storage, and/or disposal provided for in 40 CFR Part 270.

b. A Notice of Intent to Deny shall state the Secretary's reasons for the intended denial.

2. Any Draft Permit or Notice of Intent to Deny prepared

by the Department under [illegible] regulations shall be accompanied by a fact sheet and shall be based on the administrative file. Copies of the fact sheet shall be sent to the applicant; to any state or federal agency, as applicable; and, on request, to any other person.

3. The Secretary shall give public notice that a Draft Permit or a Notice of Intent to Deny has been prepared, and shall allow forty-five (45) days for review and public comment, including requests for public hearing.

4. If the Secretary issues a Draft Permit, and a timely written notice of opposition to the Draft Permit and a request for a public hearing is received, the Department, acting in conjunction with the applicant, will respond to the request in an attempt to resolve the issues giving rise to the opposition. If such issues are resolved to the satisfaction of the opponent, the opponent may withdraw the request for a public hearing.

5. No ruling shall be made on permit issuance or denial without an opportunity for a public hearing, at which all interested persons shall be given a reasonable chance to submit significant data, views or arguments orally or in writing and to examine witnesses testifying at the public hearing. A public hearing shall be scheduled if:

a. the Secretary issues a Notice of Intent to Deny, and a timely request for public hearing is received from the applicant;

b. the Secretary issues a Draft Permit, a timely request for public hearing is received from any person opposed to the granting of a permit, and such person does not subsequently withdraw the request pursuant to Section 902.A.4 of these regulations; or

c. the Secretary determines, no later that five (5) days following the end of the comment period specified in Section 902.A.3, that a public hearing should be held notwithstanding the absence of a timely request for public hearing.

6. The comment period specified in Section 902.A.3 shall automatically be extended to the close of any public hearing.

7. The Secretary shall give due consideration and the weight he/she deems appropriate to all comments received during a public comment period and to all relevant facts and circumstances presented at a public hearing.

Att: Carl Stubbs

From: Victoria Parrish
900 Calle Carmelita
Santa Fe NM 87501

Comments re:

Draft Research, Development & Demonstration permit LANL Hydrothermal Processing Unit.

Before approval might be given the DOE should produce a full environmental impact statement and hold public hearings to receive and respond to public concerns.

Att: Cornelius Amindyas

From: Victoria
900 Calle Carmen
Santa Fe NM 8715

Comments re:

Research, Development & Demonstration Experiment (PBR/SDP) unit.

Before approval may be given, the DOE must produce a full environmental impact statement and hold public hearings to receive and respond to public concerns.

LOS ALAMOS NATIONAL LABORATORY

ENVIRONMENTAL PROTECTION (ESH-8)

HAZARDOUS AND SOLID WASTE SECTION

FAX TRANSMITTAL SHEET

FAX #: (505) 667-5224 VERIFICATION #: (505) 665-0792

DATE: 1/24/94 ID # ____ LOG NO: ESH-8:94-FAX-____

FROM: T. Grieggs PHONE #: (___) 665-0451

TO: Cornelius Amindyas FAX #: (___) 827-4361 VERIFY PHONE # (___) ____

GRP/ORG: NMED

TO: ____ FAX #: (___) ____ VERIFY PHONE # (___) ____

GRP/ORG: ____

TO: ____ FAX #: (___) ____ VERIFY PHONE # (___) ____

GRP/ORG: ____

MESSAGE: Estimated air emissions for Packed Bed Reactor/ Silent Discharge Plasma experiment.

NUMBER OF PAGES TO FOLLOW: 5

Cy: HSWS File
CRM-4, MS A150

SECTION LEADER

GROUP OR DEPUTY GROUP LEADER

January 6, 1994

Los Alamos
NATIONAL LABORATORY

Los Alamos National Laboratory
Los Alamos, New Mexico 87545

Date: January 21, 1994
In Reply Refer To: ESH-8/AQMS-94-0017
Mail Stop: K490
Telephone: (505) 667-2416

Balwanth Reddy Gudoor
Technical Analysis and Permits Section
Air Pollution Control Bureau
1190 St. Francis Drive
P. O. Box 26110
Santa Fe, New Mexico 87502

AIR EMISSIONS REVIEW OF THE PACKED BED REACTOR/ SILENT DISCHARGE PLASMA (PBR/SDP) TREATMENT PROCESS

Dear Gudoor:

Thank you for your inquiry regarding the estimated air emissions from the Packed Bed Reactor/ Silent Discharge Plasma (PBR/SDP) treatment process. At your request, a second review has been performed using information contained in the RCRA draft RD&D permit for this project.

The PBR/SDP treatment process was first reviewed on July 14, 1992 to determine the applicability of AQCR 702-Permits. The preliminary information supplied by the operating group at that time indicated emission levels from the project were well below the threshold values allowed under AQCR 702. A copy of the review is attached.

Los Alamos National Laboratory has an air emissions review process in place which reviews potential air emissions on all operations proposed at the Laboratory. The review process estimates potential air emissions from the proposed project and identifies permitting issues related to New Mexico Air Quality Control Regulations (AQCR) and National Emission Standards for Hazardous Air Pollutants (NESHAP). Approximately 150 proposed projects are reviewed per year through this process. If you would like to know more about this review process, please let us know and we would be happy to discuss the process with you in more detail.

The estimates shown in Table 1 are taken from the anticipated product generation rates for a typical waste stream treated by the PBR/SDP, as shown in the example on page C5 and from the waste profile information contained in Attachment L of the draft permit.

The draft permit also indicates that the PBR/SDP process has a 99.99% destruction efficiency for organic constituents present in the waste feed. Waste generated from the process includes CO_2, CO, H_2O, acids, unreacted feed waste, and reaction by-products. The maximum amount of waste to be treated by the PBR/SDP process will be 36-108 kg/day. Our emissions estimates are based on a process throughput of 108 kg/day (238.14 lb/day). Hourly and yearly emission estimates are based on the conservative assumption that the process will operate 8 hours per day, 365 days per year.

TABLE 1

Chemical Name	Usage/ Production (lb/day)	Hourly Emissions (lb/hr)	Yearly Emissions (lb/yr)	AQCR 702 Threshold (lb/hr)
Waste Feed				
Oil	238.1	3.0E-2	86.9	0.33 [a]
Emission Products				
CO	7.0E-7	8.8E-8	2.5E-4	10.0 [b]
HCl	1.7	0.2	630.7	0.467
TCE	3.1E-5	3.9E-6	1.1E-2	
NOx	0.027	3.4E-3	9.9	10.0 [b]
Methyl alcohol	0.71	8.9E-5	0.26	17.3
Ethyl ether	0.24	3.0E-5	8.7E-2	80.0
Isopropyl alcohol	28.6	3.6E-3	10.4	65.3
Methylene chloride	0.24	3.0E-5	8.7E-2	23.3
Ethyl acetate	0.24	3.0E-5	8.7E-2	93.3
Methyl ethyl ketone	49.3	6.2E-3	18.0	39.3
Carbon tetrachloride	19.3	2.4E-3	7.0	2.0
Chloroform	0.24	3.0E-5	8.7E-2	3.33
Isobutyl alcohol	0.24	3.0E-5	8.7E-2	10.0
Trichloroethylene	0.24	3.0E-5	8.7E-2	18.0
n-Butyl alcohol	0.24	3.0E-5	8.7E-2	10.0
Toluene	0.24	3.0E-5	8.7E-2	25.0
2-Ethoxyethanol	0.24	3.0E-5	8.7E-2	1.27
MIK	0.24	3.0E-5	8.7E-2	13.7
Perchloroethylene	0.93	1.2E-4	0.34	22.3
n-Butyl acetate	0.29	3.6E-5	0.10	47.3
Chlorobenzene	0.24	3.0E-5	8.7E-2	23.3
Ethyl benzene	0.24	3.0E-5	8.7E-2	29.0
Xylenes	7.86	9.8E-4	2.87	29.0
Styrene	0.24	3.0E-5	8.7E-2	14.3
Cyclohexanone	0.24	3.0E-5	8.7E-2	6.67
2-Butoxyethanol	0.24	3.0E-5	8.7E-2	8.0
Dichlorobenzene	0.24	3.0E-5	8.7E-2	20.0
Hexane	0.24	3.0E-5	8.7E-2	12.0
Tetrahydrofuran	0.24	3.0E-5	8.7E-2	39.3
Isobutyl acetate	0.24	3.0E-5	8.7E-2	46.7
n-Propyl acetate	0.24	3.0E-5	8.7E-2	56.0
Propyl alcohol	0.24	3.0E-5	8.7E-2	33.3
Non-methane hydrocarbons	200.9	2.5E-2	73.4	10.0

TABLE 1 (continued)

Heavy Metals				
Cadmium	1.1E-4	1.3E-5	3.9E-2	0.00333
Chromium	2.3E-2	2.9E-3	8.47	0.00333 [c]
Iron	1.3E-2	1.6E-3	4.65	0.0667
Molybdenum	7.3E-3	9.1E-4	2.7	0.333
Selenium	1.6E-4	1.9E-5	5.7	0.0133
Silver	1.0E-4	1.2E-5	3.6E-2	0.000667
Additional heavy metals (including lead)	1.0E-3	1.3E-4	0.37	5 tons/yr

[a] AQCR 702 threshold value is for mineral oil.

[b] An ambient air quality standard exists for this chemical; therefore, combined regulated emissions cannot exceed 10 pounds/hr or 25 tons/yr.

[c] Emission factor is for chromium VI although, all oxidation states (II,III, and VI) of chromium are present in the treated waste stream.

The estimated emissions may vary in both amounts and chemical types but, as can be seen from both reviews, emissions will not exceed 10 pounds per hour or 25 tons per year (5 tons per year for lead). Furthermore, none of the chemicals emitted to the atmosphere will exceed the applicable AQCR 702 threshold value.

If you have any questions regarding these reviews or the Laboratory's air emissions review process, please contact Tony Grieggs at (505) 665-0451 or Jean Dewart at (505) 665-0239.

Sincerely,

Jean Dewart

Jean Dewart,
Section Leader,
Environmental Protection

JD/TG/LM:smm

Attach: a/s

Cy: J. Coogan, CLS-6, MS E525
T. Grieggs, ESH-8, MS K490
S. Fong, DOE LAAO, MS A316
J. Mack, DOE LAAO, MS A316
EM-8 Reading File
CRM-4, MS A150
Circ. File

Los Alamos
Los Alamos National Laboratory
Los Alamos, New Mexico 87545

memorandum

TO: Louis Rosocha, CLS-6, MS J564
John Coogan, CLS-6, MS E525

DATE: July 14, 1992

FROM: Doug Stavert, EM-8

MAIL STOP/TELEPHONE: K490/5-0235

SYMBOL: EM-8:92-1872

SUBJECT: **DEVELOPMENT/TESTING OF TWO-STAGE THERMAL/NONTHERMAL WASTE DESTRUCTION, (ES&H QUESTIONNAIRE Nos. 92-0225, 92-0226, 92-0194 AND 92-0224), NONRADIOACTIVE AIR EMISSIONS REVIEW**

This review of the hazardous organic compound destruction methods referenced in the above questionnaires and disscussed below, has detemined an air quality permit is not required under New Mexico Air Quality Control Regulation (AQCR) 702 - Permits. Under AQCR 702, a permit is required when a source could emit an air pollutant in excess of ACQR 702 thresholds. A stationary source is defined as any building, structure, equipment, facility or installation which emits or may emit air contaminants.

According to information provided, this project will take place at TA-35, Buildings 128 and 125. It consists of three phases all aimed at destroying hazardous organic compounds such as trichloroethylene (TCE), trichloroethane (TCA), perchloroethylene (PCA), and Freon TF (trichlorotrifluoroethane). The first step of the project is to simulate contaminated oils by mixing cutting oils and transformer oils with one, two or all of the above compounds. The mixture is then fed into the first stage of the destruction process, which is a packed bed reactor containing aluminum beads. The mixture is "cooked" within the reactor chamber. The oil and compounds within the reactor become vaporized and are directly fed into the second destruction phase.

A silent discharge plasma offgas treatment system consists of a glass tube with a positive and negative charge applied to both sides of the tubing. The vaporized mixture passes through the tubing causing the electrons within the mixture to become "excited". This excitation causes the compound to be broken apart into water, carbon dioxide and hydrochloric acid components. Occasionally, hydrogen fluoride will result if a fluorinated hydrocarbon is used as a feed material. These products are routed to a scrubber system where the acid (HCl<100 ppm) is neutralized.

The third experimental treatment method is similar to the plasma system. It involves an electron accelerator which agitates the electrons in the mixture and, like the silent discharge plasma system, renders the compound non-hazardous.

Emissions are estimated based on the amount of feedstock that remains after treatment. Previous studies of this treatment system have demonstrated a reduction in chloro/halocarbons from amounts greater than 1000 ppm to less than 100 ppb. This corresponds to an efficiency rate of 99.999%. Emissions of byproducts (HCl & HF) are also estimated.

Table 1 shows the calculated maximum emission rates based on the information provided, and the AQCR 702 thresholds for the reported chemicals.

TABLE 1

	Emissions (lb/hr	ACQR 702 Thresholds (lb/hr)	Percent Volatization
Trichloroethylene	4.4E-5	18.00	1
Trichloroethane	4.4E-5	3.00	1
Perchoroethylene	4.4E-5	22.30	1
Hydrochloric acid	1.3E-8	0.467	1
Freon TF	4.4E-5	NR	1
Carbon tetrachloride*	2.6E-5	2.00	1
Chloroform*	2.2E-5	3.33	1
Methylene chloride*	2.2E-5	23.30	1
Hydrofluoric acid	1.3E-5	0.167	1

NR: Not Regulated

*: If these materials are used, a special work permit (SWP) will be filed.

Provided that these are the only types and quantities of materials used, this source will not require permitting under AQCR 702. Should it be necessary to use different materials, please contact me so that we can re-evaluate the potential for air emissions.

Please call me at 665-0235 if you have any questions.

DS/le

Cy: D. Garvey, EM-8, MS K490
Air Quality Source Review File
Circ. File

MEMORANDUM OF MEETING OR CONVERSATION

☒ TELEPHONE ☐ PERSONAL	TIME: 1:30 pm	DATE: 1/13/94
ORIGINATING PARTY	OTHER PARTIES	
Cornelius Amindyas - HRMB	Tony Grieggs LANL	

SUBJECT RD&D draft Permit Public Meetings

DISCUSSION

Mr. Grieggs was asked if LANL wishes to have a Public Hearing regarding the PBR/SDP & Hydrothermal Unit draft RD&D ~~per~~ Permits. This is because it is one more day to the closing of public comment acceptance on the subject draft Permits and issuance of (final) Permits.

CONCLUSIONS OR AGREEMENTS

Mr. Grieggs said he would call me back on Tuesday 1/18/94 after discussing the need or redundance of the public meeting.

DISTRIBUTION

cc: Barbara Hoditschek, RCRA Permits Program Manager.

SIGNED

UNITED STATES ENVIRONMENTAL PROTECTION AGENCY
REGION 6
1445 ROSS AVENUE, SUITE 1200
DALLAS, TX 75202-2733

1994 JAN 31 RECEIVED HAZARDOUS WASTE PROGRAM

JAN 06 1994

JAN 6 1994

Ms. Barbara Hoditschek
RCRA Permits Program Manager
Hazardous and Radioactive Materials Bureau
New Mexico Environment Department
525 Camino De Los Marquez
P.O. Box 26110
Santa Fe, New Mexico 87502

Re: Research Development and Demonstration Draft Permit
Hydrothermal Processing Unit
Los Alamos National Laboratory, NM0890010515

Dear Ms. Hoditschek:

The Environmental Protection Agency (EPA) has reviewed and has no comments on the draft permit for the Hydrothermal Processing unit which will be used in experimental destruction of hazardous waste generated at Los Alamos National Laboratory. Should you have any questions, please contact at (214) 655-7441.

Sincerely,

Barbara Driscoll

Barbara Driscoll, Environmental Geologist
New Mexico/Federal Facilities Section
RCRA Permits Branch (6H-PN)

Printed on Recycled Paper

UNITED STATES ENVIRONMENTAL PROTECTION AGENCY
REGION 6
1445 ROSS AVENUE, SUITE 1200
DALLAS, TX 75202-2733

RECEIVED
HAZARDOUS WASTE
PROGRAM
DEC 1993

DEC 14 1993

Ms. Barbara Hoditschek
RCRA Permits Program Manager
Hazardous and Radioactive Materials Bureau
New Mexico Environment Department
525 Camino De Los Marquez
P.O. Box 26110
Santa Fe, New Mexico 87502

Re: Research Development and Demonstration Draft Permit
Packed-Bed Reactor/Silent Discharge Plasma unit
Los Alamos National Laboratory, NM0890010515

Dear Ms. Hoditschek:

Enclosed are the comments made by the Environmental Protection Agency (EPA) on the draft permit for the Packed-Bed Reactor/Silent Discharge Plasma (PBR/SDP) unit which will be used in experimental destruction of hazardous waste generated at Los Alamos National Laboratory. Should you have any questions on these comments, please contact Barbara Driscoll at (214) 655-7441.

Sincerely,

David Neleigh, Chief
New Mexico/Federal Facilities Section
RCRA Permits Branch (6H-PN)

Enclosure

Printed on Recycled Paper

COMMENTS

1. Upon completion of this Research, Development and Demonstration (RD&D) project should Los Alamos National Laboratory decide to permit a permanent PDB/SDP unit it will need to be permitted as an incinerator under 40 CFR 264 Subpart O and should also meet the requirements of EPA's Combustion Strategy.

2. In addition, the permit regulatory limits in Subpart O need to include, but are not limited to the following items:

a. What parameters need to be measured to ensure that the waste feed cuts off if the unit is not operating within specifications?

b. The amount and type of anticipated emissions need to be defined. How will LANL know when complete combustion has occurred. These parameters need to be defined.

3. On page A3, the indented paragraph on monitoring indicates that monitoring could be operated continuously during the RD&D experiments, but it may not be necessary. Monitoring should be continuous or else there is no way to determine if the process is stable or not. EPA is concerned that if monitoring is not continuous then the waste material is being burned for destruction purposes and not RD&D.

4. There are two typos on page C2, second paragraph, sentences 3 and 5 do not start with capital letters.

5. On page C8, under the section entitled,"Objective", paragraph three indicates that the wastes in storage at LANL are described in Attachment 11. There is no Attachment 11 in the permit.

RCRIS Permit/Closure/Post-Closure
Event Data Entry Form

Screen 1

Handler ID: NM0890010515

Facility Name: LANL

Screen 2

Permit Processing #: RDD1

Screen 3

Permit Authority S/J/E: S

EPA Responsible Person:

State Responsible Person: CAA

Screen 4

Event Name	Activity Track	Event Code	Resp. Agency	Seq. #	Resp. Person	Status Code	Sched. Date (MM/DD/YY)	Actual Date (MM/DD/YY)	Add/Update/ Delete/Path
PUBLIC NOTICE	RD	160	S		CAA		113093	113093	A

Comments:

Screen 5

Link Event to These Unit Groups

Process Code	Unit ID	Process Code	Unit ID	Process Code	Unit ID
T04	PBEDREACTR				

For Additional Unit Links Use Second Block Below

Screen 4

Event Name	Activity Track	Event Code	Resp. Agency	Seq. #	Resp. Person	Status Code	Sched. Date (MM/DD/YY)	Actual Date (MM/DD/YY)	Add/Update/ Delete/Path

Comments:

Screen 5

Link Event to These Unit Groups

Process Code	Unit ID	Process Code	Unit ID	Process Code	Unit ID

Special Instructions:

Submitted By: Cornelius Amindyas

Date Submitted: 11-30-93

QA By:

QA Date:

Data Entry By:

Date Entered:

Cornelius

Department of Energy
Field Office, Albuquerque
Los Alamos Area Office
Los Alamos, New Mexico 87544

OCT 18 1993

1993 OCT
RECEIVED
HAZARDOUS WASTE
PROGRAM

Ms. Barbara Hoditschek
Permit Section Coordinator
Hazardous and Radioactive Materials Bureau
New Mexico Environment Department
P. O. Box 26110
Santa Fe, NM 87502

Dear Ms. Hoditschek:

Following a meeting on September 24, 1993, amongst the Department of Energy, the Los Alamos National Laboratory (LANL), and New Mexico Environment Department (NMED) personnel, Mr. Amindyas requested further information regarding the projection of the Guaje Mountain fault which passes through Technical Area 35. That request was transmitted directly to LANL via facsimile on September 27, 1993. The enclosed document provides a response to Mr. Amindyas' request.

Also incorporated into the enclosure is a response to an additional request made by your staff during a telephone conversation between LANL and NMED personnel on September 30, 1993. During that conversation, LANL was asked to include a discussion of building inspections in the response to the initial inquiry. If you would like to discuss this matter further or if you have any questions, please contact Jon Mack of my staff at 665-5026.

Sincerely,

Joseph C. Vozella, Chief
Environment, Safety and Health
Branch

LESH:7JM-083

Enclosure

cc w/enclosure:
J. Mack, ES&H, LAAO
T. Gunderson, EM-DO, LANL, MS-J591
T. Grieggs, EM-8, LANL, MS-K490

Response to request for clarification of geology for the proposed RD&D project at TA-35-128 Packed Bed Reactor/Silent Discharge Plasma Treatment Unit. This request was made by FAX transmittal from the NMED to LANL on 9/27/93. For clarity, each question is repeated below and immediately followed by the Laboratory's response.

1. *Provide a brief geologic description of the RD&D facility area (i.e., types of rock assemblages and their ages.)*

   RESPONSE:
   The following geologic description is based on mapping of the area containing TA-35 by LANL geologists in 1990 (Vaniman and Woheltz, 1990). At TA-35, all of the exposed rocks are of the Tshirege member of the Bandelier Tuff which is about 1.13 million years old. The surface and near surface rock consists of nonwelded to moderately-welded tuff (Unit 3), ranging from 50-100 feet thick along the mesa top. Underlying this is a layer of nonwelded tuff ranging in thickness from 15 to 80 feet (Unit 3 nw). The lowermost exposed layer consists of moderately- to densly-welded tuff with a thickness of 90-150 feet (Unit 2).

2. *How (on what basis) did LANL deduce that a fault probably passes east of the PBR/SDP Lab?*

   RESPONSE:
   The projected fault line is based on information gathered during a seismic hazard evaluation for TA-55 in 1990 by LANL geologists (Vaniman and Wohletz, 1990).

   To the north of Los Alamos the presence of the Guaje Mountain fault is indicated by discrete fault scarps. However, in the area surrounding TA-35 similar scarps have not been observed. Instead, the projected fault line is based on dispersed surface features which represent the most probable southern extension of the fault. Surface features evaluated include fractures, micrograbens, and "zipper joints."

3. *Mention in your response that experiments (pilot-scale) will be conducted in building 128 but large-scale treatment of the hazardous waste shall be conducted at a new location away from the subject fault zone.*

RESPONSE:
The Laboratory believes that, because the PBR/SDP project located in TA-35-128 is a pilot-scale experiment, any release that might occur as a result of seismic activity, would pose little or no threat to human health or the environment. Previous bench-scale studies using surrogate materials, similar to those proposed under the RD&D permit application, have not exceeded any Laboratory safety or environmental criteria.

Volumes of waste to be treated and the rates of treatment as proposed in the permit application are adequate to demonstrate, as pilot-scale, the effectiveness of the technology. It is anticipated that if the project were to be modified for large-scale treatment test a new experimental location would be selected. However, should additional geological information become available which verifies no Holocene movement in the area of the projected fault line, the Laboratory may choose to continue larger scale experiments in building 128 (see response to questions 2 and 4). However, any increase in scale of the project would require a modification to the RD&D permit and subsequent approval by your office.

During a telephone conversation between Laboratory and NMED personnel on 9/30/93, NMED requested that the Laboratory perform annual visual inspections of building 128 to ensure that no structural damage has occurred due to ground movement. Inspections of Laboratory buildings, including TA-35-128, are conducted by the Laboratory's Maintenance Group, ENG-6, on a regular basis (currently every six months). These inspections include visual checks for damage or deterioration related to the physical structure of the building (i.e., Cracks in foundations or walls, deterioration of materials, settling of foundation or walls, any other signs of settling or building movement) as well as checks of mechanical and electrical systems. For any damage of deterioration observed during the inspection, appropriate documentation is generated and corrective action taken. Consequently, we do not believe that any additional efforts at inspection are necessary.

4. How old is the fault? Basis? C13/C14?

RESPONSE:
TA-63 is the proposed location for the new Hazardous Waste Treatment Facility. As required to comply with the seismic standard in HWMR-7, Pt.IX, 270.14(b) (11)(ii), subsurface exploration was performed at TA-63 during the fall of 1992 and summer of 1993 by Woodward-Clyde Federal Services under contract to LANL. Exploratory trenches were excavated across TA-63 within the bounds of the proposed treatment facility as well as across the projected extension of the Guaje Mountain fault immediately to the west of the proposed site, and directly south of TA-35-128. As a result of that work it was concluded that "no faults which have had displacement in Holocene time are present at TA-63 or in the vicinity of the Guaje Mountain fault projection. In addition, no lineations which suggest the presence of a fault (which has had displacement in Holocene time) are present within 200 feet of the proposed Hazardous Waste Treatment Facility." (See attached letter). The overlying material was dated by a combination of 14C analysis and estimates of soil development rates.

A subsequent fifth question was forwarded via phone. The question and its response follows:

5. *What plans do you have for testing the ambient air around the facility?*

RESPONSE:
LANL does not propose to do any ambient air monitoring at this location as a result of this unit being located there. It is proposed specific pieces of equipment and valves be monitored as per Subpart BB of 40 CFR Part 264 of RCRA. It is anticipated that the Air Quality Section EM-8 will conduct this monitoring activity.

Woodward-Clyde

Engineering & sciences applied to the earth & its environment

September 22, 1993

Mr. John Tegtmeier
Los Alamos National Laboratory
EM-7, MS-K517
Los Alamos, NM 87545

Subject: **EVALUATION OF THE POTENTIAL FOR SURFACE FAULTING AT TECHNICAL AREA 63**

Dear Sir:

Compliance with the seismic standard listed in 40 CFR 264.18(a) is required for portions of new facilities where treatment, storage, or disposal of hazardous waste will be conducted. Because the proposed Hazardous Waste Treatment Facility (HWTF) at Technical Area 63 (TA-63) will be used for treatment of hazardous waste, portions of this facility must not be located within 200 feet of a fault which has had displacement in Holocene time.

To demonstrate compliance with this seismic standard, subsurface exploration (trenching) was conducted during the fall of 1992 and the summer of 1993. As required by 40 CFR 270.14(b)(11)(ii)(B), trenches were excavated across the full east-west extent of TA-63 including the proposed HWTF treatment building site. The trenches were oriented perpendicular to the north-south trending Guaje Mountain fault which was suspected to pass within 3,000 feet of the proposed facility. In addition, a 492-foot trench was excavated across the mapped projection of the fault just west of Pajarito Road and TA-63.

Based on the subsurface exploration, we can conclude that no faults which have had displacement in Holocene time are present at TA-63 or in the vicinity of the Guaje Mountain fault projection. In addition, no lineations which suggest the presence of a fault (which has had displacement in Holocene time) are present within 200 feet of the proposed HWTF facility. Formal results will be summarized in a report to be issued after review by DOE Headquarters in late 1993 or early 1994.

H:\CONTRACT\938L320.L2N

C0922931313

Woodward-Clyde Federal Services • A subsidiary of Woodward-Clyde Group, Inc.
500 12th Street, Suite 100 • Oakland, California 94607
510-893-3600 • Fax 510-874-3268

Please feel free to call if you have any questions.

Best regards,
WOODWARD-CLYDE FEDERAL SERVICES

Ivan G. Wong

Ivan G. Wong
Vice-President and Manager
Seismic Hazards Branch

cc: Dean Keller, ENG-DO
Jamie Gardner, EES-1

Department of Energy
Field Office, Albuquerque
Los Alamos Area Office
Los Alamos, New Mexico 87544

Rec'd: OCT 18 1993

+ Supplementary Geol. & Seismic information attached.

Ms. Barbara Hoditschek
Permit Section Coordinator
Hazardous and Radioactive Materials Bureau
New Mexico Environment Department
P. O. Box 26110
Santa Fe, NM 87502

Dear Ms. Hoditschek:

Following a meeting on September 24, 1993, amongst the Department of Energy, the Los Alamos National Laboratory (LANL), and New Mexico Environment Department (NMED) personnel, Mr. Amindyas requested further information regarding the projection of the Guaje Mountain fault which passes through Technical Area 35. That request was transmitted directly to LANL via facsimile on September 27, 1993. The enclosed document provides a response to Mr. Amindyas' request.

Also incorporated into the enclosure is a response to an additional request made by your staff during a telephone conversation between LANL and NMED personnel on September 30, 1993. During that conversation, LANL was asked to include a discussion of building inspections in the response to the initial inquiry. If you would like to discuss this matter further or if you have any questions, please contact Jon Mack of my staff at 665-5026.

Sincerely,

Joseph C. Vozella, Chief
Environment, Safety and Health
Branch

LESH:7JM-083

Enclosure

cc w/enclosure:
J. Mack, ES&H, LAAO
T. Gunderson, EM-DO, LANL, MS-J591
T. Grieggs, EM-8, LANL, MS-K490

Response to request for clarification of geology for the proposed RD&D project at TA-35-128 Packed Bed Reactor/Silent Discharge Plasma Treatment Unit. This request was made by FAX transmittal from the NMED to LANL on 9/27/93. For clarity, each question is repeated below and immediately followed by the Laboratory's response.

1. *Provide a brief geologic description of the RD&D facility area (i.e., types of rock assemblages and their ages.)*

   RESPONSE:
   The following geologic description is based on mapping of the area containing TA-35 by LANL geologists in 1990 (Vaniman and Woheltz, 1990). At TA-35, all of the exposed rocks are of the Tshirege member of the Bandelier Tuff which is about 1.13 million years old. The surface and near surface rock consists of nonwelded to moderately-welded tuff (Unit 3), ranging from 50-100 feet thick along the mesa top. Underlying this is a layer of nonwelded tuff ranging in thickness from 15 to 80 feet (Unit 3 nw). The lowermost exposed layer consists of moderately- to densly-welded tuff with a thickness of 90-150 feet (Unit 2).

2. *How (on what basis) did LANL deduce that a fault probably passes east of the PBR/SDP Lab?*

   RESPONSE:
   The projected fault line is based on information gathered during a seismic hazard evaluation for TA-55 in 1990 by LANL geologists (Vaniman and Wohletz, 1990).

   To the north of Los Alamos the presence of the Guaje Mountain fault is indicated by discrete fault scarps. However, in the area surrounding TA-35 similar scarps have not been observed. Instead, the projected fault line is based on dispersed surface features which represent the most probable southern extension of the fault. Surface features evaluated include fractures, micrograbens, and "zipper joints."

3. *Mention in your response that experiments (pilot-scale) will be conducted in building 128 but large-scale treatment of the hazardous waste shall be conducted at a new location away from the subject fault zone.* [illegible] discussed at the meeting.

RESPONSE:
The Laboratory believes that, because the PBR/SDP project located in TA-35-128 is a pilot-scale experiment, any release that might occur as a result of seismic activity, would pose little or no threat to human health or the environment. Previous bench-scale studies using surrogate materials, similar to those proposed under the RD&D permit application, have not exceeded any Laboratory safety or environmental criteria.

Volumes of waste to be treated and the rates of treatment as proposed in the permit application are adequate to demonstrate, as pilot-scale, the effectiveness of the technology. It is anticipated that if the project were to be modified for large-scale treatment test a new experimental location would be selected. However, should additional geological information become available which verifies no Holocene movement in the area of the projected fault line, the Laboratory may choose to continue larger scale experiments in building 128 (see response to questions 2 and 4). However, any increase in scale of the project would require a modification to the RD&D permit and subsequent approval by your office.

During a telephone conversation between Laboratory and NMED personnel on 9/30/93, NMED requested that the Laboratory perform annual visual inspections of building 128 to ensure that no structural damage has occurred due to ground movement. Inspections of Laboratory buildings, including TA-35-128, are conducted by the Laboratory's Maintenance Group, ENG-6, on a regular basis (currently every six months). These inspections include visual checks for damage or deterioration related to the physical structure of the building (i.e., Cracks in foundations or walls, deterioration of materials, settling of foundation or walls, any other signs of settling or building movement) as well as checks of mechanical and electrical systems. For any damage of deterioration observed during the inspection, appropriate documentation is generated and corrective action taken. Consequently, we do not believe that any additional efforts at inspection are necessary.

4. How old is the fault? Basis? C13/C14?

RESPONSE:
TA-63 is the proposed location for the new Hazardous Waste Treatment Facility. As required to comply with the seismic standard in HWMR-7, Pt.IX, 270.14(b) (11)(ii), subsurface exploration was performed at TA-63 during the fall of 1992 and summer of 1993 by Woodward-Clyde Federal Services under contract to LANL. Exploratory trenches were excavated across TA-63 within the bounds of the proposed treatment facility as well as across the projected extension of the Guaje Mountain fault immediately to the west of the proposed site, and directly south of TA-35-128. As a result of that work it was concluded that "no faults which have had displacement in Holocene time are present at TA-63 or in the vicinity of the Guaje Mountain fault projection. In addition, no lineations which suggest the presence of a fault (which has had displacement in Holocene time) are present within 200 feet of the proposed Hazardous Waste Treatment Facility." (See attached letter). The overlying material was dated by a combination of 14C analysis and estimates of soil development rates.

A subsequent fifth question was forwarded via phone. The question and its response follows:

5. *What plans do you have for testing the ambient air around the facility?*

RESPONSE:
LANL does not propose to do any ambient air monitoring at this location as a result of this unit being located there. It is proposed specific pieces of equipment and valves be monitored as per Subpart BB of 40 CFR Part 264 of RCRA. It is anticipated that the Air Quality Section EM-8 will conduct this monitoring activity.

Woodward-Clyde

Engineering & sciences applied to the earth & its environment

September 22, 1993

Mr. John Tegtmeier
Los Alamos National Laboratory
EM-7, MS-K517
Los Alamos, NM 87545

Subject: **EVALUATION OF THE POTENTIAL FOR SURFACE FAULTING AT TECHNICAL AREA 63**

Dear Sir:

Compliance with the seismic standard listed in 40 CFR 264.18(a) is required for portions of new facilities where treatment, storage, or disposal of hazardous waste will be conducted. Because the proposed Hazardous Waste Treatment Facility (HWTF) at Technical Area 63 (TA-63) will be used for treatment of hazardous waste, portions of this facility must not be located within 200 feet of a fault which has had displacement in Holocene time.

To demonstrate compliance with this seismic standard, subsurface exploration (trenching) was conducted during the fall of 1992 and the summer of 1993. As required by 40 CFR 270.14(b)(11)(ii)(B), trenches were excavated across the full east-west extent of TA-63 including the proposed HWTF treatment building site. The trenches were oriented perpendicular to the north-south trending Guaje Mountain fault which was suspected to pass within 3,000 feet of the proposed facility. In addition, a 492-foot trench was excavated across the mapped projection of the fault just west of Pajarito Road and TA-63.

Based on the subsurface exploration, we can conclude that no faults which have had displacement in Holocene time are present at TA-63 or in the vicinity of the Guaje Mountain fault projection. In addition, no linearions which suggest the presence of a fault (which has had displacement in Holocene time) are present within 200 feet of the proposed HWTF facility. Formal results will be summarized in a report to be issued after review by DOE Headquarters in late 1993 or early 1994.

F:\CONTRACTS\[illegible]\LN

CD922[illegible]1313

Woodward-Clyde Federal Services • A subsidiary of Woodward-Clyde Group, Inc.
500 12th Street, Suite 100 • Oakland, California 94607
510-893-3600 • Fax 510-874-3268

State of New Mexico
ENVIRONMENT DEPARTMENT
AIR QUALITY BUREAU
Harold Runnels Building
1190 St. Francis Drive, P.O. Box 26110
Santa Fe, New Mexico 87502
(505) 827-0070

BRUCE KING
GOVERNOR

JUDITH M. ESPINOSA
SECRETARY

RON CURRY
DEPUTY SECRETARY

B# ✓
To Corrective ✓
File B-4 ✓

January 5, 1994

CERTIFIED MAIL NO. P 108 733 324
RETURN RECEIPT REQUESTED

Tony Grieggs
Staff Member
Los Alamos National Laboratory
Mailstop K-490
P.O. Box 1663
Los Alamos, NM 87545

Ref: FACT SHEET on Los Alamos National Laboratory PBR/SDP Unit experiment
Sub: Possible Air Quality Permit Requirement for PBR/SDP Unit

Dear Mr. Grieggs:

This letter is in regarding the U.S. Department of Energy (DOE)/Los Alamos National Laboratory (LANL) for Research, Development and Demonstration experiment at the Packed-Bed Reactor/Silent Discharge Plasma (PBR/SDP) Unit.

The unit description given in the NMED Hazardous and Radioactive Materials Bureau fact sheet states that, there will be some air pollutants emitted from this experimental source.

Please note an air quality permit may be required for this experimental source if any of the following are applicable:

1) the emission rate of any one regulated air pollutant (nitrogen oxides, carbon monoxide, non-methane hydrocarbons, total suspended particulate, sulfur dioxide) is greater than 10 pounds per hour or 25 tons per year, or

2) the emission rate of Lead is greater than 5 tons per year, or

3) any toxic air pollutant listed in the AQCR 702, Part Three Appendix A which exceeds the corresponding emission rate shown in pounds per hour.

New Mexico
DRUG FREE
It's a State of Mind!

It is very important to estimate the type and amount of all possible air pollutants from this source to determine whether an air quality permit is required.

A general air quality permit application is enclosed with this letter. Please estimate all possible air pollutants from this experiment and indicate the maximum emission rates of each pollutant in the enclosed application and submit to our Department for review.

For your information a copy of AQCR 702 and AQCR 700 are enclosed with this letter which explains the permit requirement determination procedure, and required permit fee.

AQCR 702, Part Two A.4 states that "for all sources subject to this regulation, applications for permits shall be filed prior to the commencement of the construction, modification, or installation. Regardless of the anticipated commencement date, no construction, modification or installation shall begin prior to issuance of the permit".

If you have any questions, please call me in Santa Fe at (505) 827-2412.

Sincerely,

Balwanth Reddy Gudoor
Environmental Engineer
Technical Analysis and Permits Section
Air Pollution Control Bureau

Enclosures: 1) General air quality permit application
2) A copy of AQCR 702 (explains permit applicability)
3) A copy of AQCR 700 (explains permit fee requirements)

xc: Barbara Hoditschek, Hazardous and Radioactive Materials Bureau, NMED

RECORD OF COMMUNICATION	☒ PHONE CALL ☐ DISCUSSION ☐ FIELD TRIP ☐ CONFERENCE ☐ OTHER (SPECIFY) (Record of item checked above)	
TO: LANL (Tony Grieggs (LANL) John Mack (DOE)	FROM: Cornelius Amindjoyo HRMB	DATE 10/13/93 TIME 2:30 - 2:33

SUBJECT

Supplementary geologic and Air Quality Standards.

SUMMARY OF COMMUNICATION

RE: Meeting of 9/28/93 with LANL in HRMB.

(1) LANL was asked to provide the brief geologic description of the RD&D PBR/SDP TA-35 Area as agreed on the 28th. of September at a meeting with LANL's delegation.

(2) LANL was also asked to submit LANL's plan(s) to meet Air Quality Standards in the vicinity of the RD&D facility. This regards the gaseous effluent that may escape beyond the activated charcoal at the outlet leading to the vent in the roof from where traces of hazardous gas effluents could escape into the surrounding air.

CONCLUSIONS, ACTION TAKEN OR REQUIRED

Left phone messages on Tony's and John's answering machines.

INFORMATION COPIES

TO: Barbara Hoditschek, Program Manager, RCRA Permits - HRMB

State of New Mexico
ENVIRONMENT DEPARTMENT
Harold Runnels Building
1190 St. Francis Drive, P.O. Box 26110
Santa Fe, New Mexico 87502
(505) 827-2850

BRUCE KING
GOVERNOR

JUDITH M. ESPINOSA
SECRETARY

RON CURRY
DEPUTY SECRETARY

CERTIFIED MAIL
RETURN RECEIPT REQUESTED

September 28, 1993

Mr. Jerry L. Bellows, Area Manager
Los Alamos Area Office
Department of Energy
528 35th Street
Los Alamos, New Mexico, 87544-5000

RE: Completeness of Packed-Bed Reactor/Silent Discharge Plasma Unit Permit Application
EPA Identification Number - NM9570024423

Dear Mr. Bellows,

The Department of Energy and Los Alamos National Laboratory submitted a part B Research, Development and Demonstration permit application for the Packed-Bed Reactor/Silent Discharge Plasma Unit located in Technical Area 35. The permit application has been reviewed for completeness and determined to meet the requirements for RCRA permits identified in the State's Hazardous Waste Management regulations (HWMR-7). The draft permit will be prepared during the October - December 1993 quarter. Should any further questions arise, the New Mexico Environment Department may request additional information, but only when necessary to clarify, modify, or supplement previously submitted material. Requests for such additional information will not render an application incomplete.

If you have any questions please contact Mr. Cornelius Amindyas at (505) 827-4308.

Sincerely,

Barbara Hoditschek
Program Manager
RCRA Permit Section

xc: Benito Garcia, NMED, HRMB
David Neleigh, EPA Region 6H-PN
Jon Mack, DOE/LAAO
Tony Grieggs, EM-8, LANL, MS-K490
File Red, 93

RCRIS Permit/Closure/Post-Closure Event Data Entry Form

Screen 1

Handler ID N M 0 8 9 0 0 1 0 5 1 5

Facility Name LANL

Screen 2

Permit Processing # R D D 1

Screen

Permit Authority S/J/E S

EPA Responsible Person

State Responsible Person C A A

Screen

Event Name	Activity Track	Event Code	Resp. Agency	Seq. #	Resp. Person	Status Code	Sched. Date (MM/DD/YY)	Actual Date (MM/DD/YY)	Add/Update Delete/Path
Application Complete	R D	1 5 0	S		C A A			0 9 2 8 9 3	A

Comments Technically adequate

Screen

Link Event to These Unit Groups

Process Code	Unit ID	Process Code	Unit ID	Process Code	Unit ID

For Additional Unit Links Use Second Block Below

Screen

Event Name	Activity Track	Event Code	Resp. Agency	Seq. #	Resp. Person	Status Code	Sched. Date (MM/DD/YY)	Actual Date (MM/DD/YY)	Add/Update Delete/Path

Comments

Screen

Link Event to These Unit Groups

Process Code	Unit ID	Process Code	Unit ID	Process Code	Unit ID

Special Instructions:

Submitted By: Cornelius Amindyas

Date Submitted: 9/29/93

QA By:

QA Date:

Data Entry By:

Date Entered:

RCRIS Permit/Closure/Post-Closure Event Data Entry Form

Screen 1

Handler ID NM0890010515

Facility Name LANL

Screen 2

Permit Processing # RDD1

Screen

Permit Authority S/J/E S

EPA Responsible Person

State Responsible Person CAA

Screen

Event Name	Activity Track	Event Code	Resp. Agency	Seq. #	Resp. Person	Status Code	Sched. Date (MM/DD/YY)	Actual Date (MM/DD/YY)	Add/Update Delete/Path
Revisions Received	RD	110	S		CAA	CO		092993	A

Comments

Screen

Link Event to These Unit Groups

Process Code	Unit ID	Process Code	Unit ID	Process Code	Unit ID
T04	PBEDREACTR				

For Additional Unit Links Use Second Block Below

Screen

Event Name	Activity Track	Event Code	Resp. Agency	Seq. #	Resp. Person	Status Code	Sched. Date (MM/DD/YY)	Actual Date (MM/DD/YY)	Add/Update Delete/Path

Comments

Screen

Link Event to These Unit Groups

Process Code	Unit ID	Process Code	Unit ID	Process Code	Unit ID

Special Instructions:

Submitted By: Cornelius Amindyas

Date Submitted: 9/29/93

QA By:

QA Date:

Data Entry By:

Date Entered:

RCRIS Permit/Closure/Post-Closure Event Data Entry Form

Screen 1

Handler ID NM0890010515

Facility Name LANL

Screen 2

Permit Processing # RDD1

Screen 3

Permit Authority S/J/E S

EPA Responsible Person

State Responsible Person CAA

Screen 4

Event Name	Activity Track	Event Code	Resp. Agency	Seq. #	Resp. Person	Status Code	Sched. Date (MM/DD/YY)	Actual Date (MM/DD/YY)	Add/Update/ Delete/Path
Technical NOD	RD	100	S		CAA			08/04/93	A

Comments

Screen

Link Event to These Unit Groups

Process Code	Unit ID	Process Code	Unit ID	Process Code	Unit ID
T04	PBEDREACTR				

For Additional Unit Links Use Second Block Below

Screen

Event Name	Activity Track	Event Code	Resp. Agency	Seq. #	Resp. Person	Status Code	Sched. Date (MM/DD/YY)	Actual Date (MM/DD/YY)	Add/Update Delete/Path

Comments

Screen

Link Event to These Unit Groups

Process Code	Unit ID	Process Code	Unit ID	Process Code	Unit ID

Special Instructions:

Submitted By: Cornelius Amindyas

Date Submitted: 9/29/93

QA By:

QA Date:

Data Entry By:

Date Entered:

RCRIS Permit/Closure/Post-Closure Event Data Entry Form

Screen 1

Handler ID NM0890010515

Facility Name LANL

Screen 2

Permit Processing # RDDL

Screen 3

Permit Authority S/J/E S

EPA Responsible Person

State Responsible Person CAA

Screen 4

Event Name	Activity Track	Event Code	Resp. Agency	Seq. #	Resp. Person	Status Code	Sched. Date (MM/DD/YY)	Actual Date (MM/DD/YY)	Add/Update/ Delete/Path
Revision Rec'd.	RD	110	S		CAA	IN		07 23 93	A

Comments

Screen 5

Link Event to These Unit Groups

Process Code	Unit ID	Process Code	Unit ID	Process Code	Unit ID
T04	PBED REACTR				

For Additional Unit Links Use Second Block Below

Screen 4

Event Name	Activity Track	Event Code	Resp. Agency	Seq. #	Resp. Person	Status Code	Sched. Date (MM/DD/YY)	Actual Date (MM/DD/YY)	Add/Update/ Delete/Path

Comments

Screen

Link Event to These Unit Groups

Process Code	Unit ID	Process Code	Unit ID	Process Code	Unit ID

Special Instructions:

Submitted By: Cornelius Amindyas

Date Submitted: 9/29/93

QA By:

QA Date:

Data Entry By:

Date Entered:

RCRIS Permit/Closure/Post-Closure Event Data Entry Form

Screen 1

Handler ID: NM0890010515

Facility Name: LANL

Screen 2

Permit Processing #: RDD1

Screen 3

Permit Authority S/J/E: S

EPA Responsible Person:

State Responsible Person: CAA

Screen

Event Name	Activity Track	Event Code	Resp. Agency	Seq. #	Resp. Person	Status Code	Sched. Date (MM/DD/YY)	Actual Date (MM/DD/YY)	Add/Update/Delete/Path
Admin. Compl.	RD	110	S		CAA			07093	A

Comments: Application is Administratively Complete

Screen

Link Event to These Unit Groups

Process Code	Unit ID	Process Code	Unit ID	Process Code	Unit ID
T04	PBEDREACTR				

For Additional Unit Links Use Second Block Below

Screen

Event Name	Activity Track	Event Code	Resp. Agency	Seq. #	Resp. Person	Status Code	Sched. Date (MM/DD/YY)	Actual Date (MM/DD/YY)	Add/Update/Delete/Path

Comments:

Screen

Link Event to These Unit Groups

Process Code	Unit ID	Process Code	Unit ID	Process Code	Unit ID

Special Instructions:

Submitted By: Cornelius Amintyas

Date Submitted: 9/29/93

QA By:

QA Date:

Data Entry By:

Date Entered:

RCRIS Permit/Closure/Post-Closure Event Data Entry Form

Screen 1

Handler ID NM0890010515

Facility Name LANL

Screen 2

Permit Processing # RDD1

Screen 3

Permit Authority S/J/E S

EPA Responsible Person

State Responsible Person CAA

Screen 4

Event Name	Activity Track	Event Code	Resp. Agency	Seq. #	Resp. Person	Status Code	Sched. Date (MM/DD/YY)	Actual Date (MM/DD/YY)	Add/Update/ Delete/Path
Extension Granted	RD	023	S		CAA			060893	A

Comments

Screen

Link Event to These Unit Groups

Process Code	Unit ID	Process Code	Unit ID	Process Code	Unit ID
T04	PBEDREACTR				

For Additional Unit Links Use Second Block Below

Screen

Event Name	Activity Track	Event Code	Resp. Agency	Seq. #	Resp. Person	Status Code	Sched. Date (MM/DD/YY)	Actual Date (MM/DD/YY)	Add/Update Delete/Path

Comments

Screen

Link Event to These Unit Groups

Process Code	Unit ID	Process Code	Unit ID	Process Code	Unit ID

Special Instructions:

Submitted By: Cornelius Amindyas

Date Submitted: 9/29/93

QA By:

QA Date:

Data Entry By:

Date Entered:

RCRIS Permit/Closure/Post-Closure
Event Data Entry Form

Screen 1

Handler ID NM890010515

Facility Name LANL

Screen 2

Permit Processing # RDD1

Screen

Permit Authority S/J/E S

EPA Responsible Person

State Responsible Person CAA

Event Name	Activity Track	Event Code	Resp. Agency	Seq. #	Resp. Person	Status Code	Sched. Date (MM/DD/YY)	Actual Date (MM/DD/YY)	Add/Update Delete/Patl
Request for Extension	RD	014	S		CAA			060393	A

Comments

Link Event to These Unit Groups

Process Code	Unit ID	Process Code	Unit ID	Process Code	Unit ID
T04	PBEDREACTR				

For Additional Unit Links Use Second Block Below

Event Name	Activity Track	Event Code	Resp. Agency	Seq. #	Resp. Person	Status Code	Sched. Date (MM/DD/YY)	Actual Date (MM/DD/YY)	Add/Updat Delete/Pa

Comments

Link Event to These Unit Groups

Process Code	Unit ID	Process Code	Unit ID	Process Code	Unit ID

Special Instructions:

Submitted By: Cornelius Amindyas

Date Submitted: 9/29/93

QA By:

QA Date:

Data Entry By:

Date Entered:

RCRIS Permit/Closure/Post-Closure Event Data Entry Form

Screen 1

Handler ID NM0890010515

Facility Name LANL

Screen 2

Permit Processing # RDD1

Screen 3

Permit Authority S/J/E S

EPA Responsible Person

State Responsible Person CAA

Screen 4

Event Name	Activity Track	Event Code	Resp. Agency	Seq. #	Resp. Person	Status Code	Sched. Date (MM/DD/YY)	Actual Date (MM/DD/YY)	Add/Update/ Delete/Path
Revision Received	RD	110	S		CAA			043093	A

Comments

Screen

Link Event to These Unit Groups

Process Code	Unit ID	Process Code	Unit ID	Process Code	Unit ID
T04	PBEDREACTR				

For Additional Unit Links Use Second Block Below

Screen

Event Name	Activity Track	Event Code	Resp. Agency	Seq. #	Resp. Person	Status Code	Sched. Date (MM/DD/YY)	Actual Date (MM/DD/YY)	Add/Update Delete/Path

Comments

Screen

Link Event to These Unit Groups

Process Code	Unit ID	Process Code	Unit ID	Process Code	Unit ID

Special Instructions:

Submitted By: Cornelius Amindyas

Date Submitted: 9/29/93

QA By:

QA Date:

Data Entry By:

Date Entered:

RCRIS Permit/Closure/Post-Closure Event Data Entry Form

Screen 1

Handler ID: NM0890010515

Facility Name: LANL

Screen 2

Permit Processing #: RDD1

Screen 3

Permit Authority S/J/E: S

EPA Responsible Person:

State Responsible Person: CAA

Screen 4

Event Name	Activity Track	Event Code	Resp. Agency	Seq. #	Resp. Person	Status Code	Sched. Date (MM/DD/YY)	Actual Date (MM/DD/YY)	Add/Update/ Delete/Path
NOD	RD	100	S		CAA			033193	A

Comments:

Screen

Link Event to These Unit Groups

Process Code	Unit ID	Process Code	Unit ID	Process Code	Unit ID
T04	PBEDREACTR				

For Additional Unit Links Use Second Block Below

Screen

Event Name	Activity Track	Event Code	Resp. Agency	Seq. #	Resp. Person	Status Code	Sched. Date (MM/DD/YY)	Actual Date (MM/DD/YY)	Add/Update Delete/Path

Comments:

Screen

Link Event to These Unit Groups

Process Code	Unit ID	Process Code	Unit ID	Process Code	Unit ID

Special Instructions:

Submitted By: Cornelius Amindyas

Date Submitted: 9/29/93

QA By:

QA Date:

Data Entry By:

Date Entered:

State of New Mexico
ENVIRONMENT DEPARTMENT
Harold Runnels Building
1190 St. Francis Drive, P.O. Box 26110
Santa Fe, New Mexico 87502
(505) 827-2850

BRUCE KING
GOVERNOR

JUDITH M. ESPINOSA
SECRETARY

RON CURRY
DEPUTY SECRETARY

FAX COVER SHEET

DATE: September 27th, 1993

TO: Tony Grieggs

COMPANY: LANL-ENVIRONMENTAL PROTECTION (EM-8)

FAX NO: 667-5224

TELEPHONE: 665-0451

MESSAGE: Hi Tony; As discussed, here are the questions:-
(1) Provide a brief geologic description of the RD&D facility area, i.e types of rock assemblages and their ages.
(2) How (on what basis) did LANL deduce that a fault probably passes east of the PBR/SDP lab?
(3) Mention in your response that experiments (pilot-scale) will be conducted in Bldg 128 but large-scale treatment of the hazardous waste shall be conducted at a new location away from the subject fault zone. (4) How old is the fault? Basis? C_{13}/C_{14}? K/Ar?

FROM: CORNELIUS AMINDYAS **NO OF PAGES** 1
(Including cover page)

COMPANY: NEW MEXICO ENVIRONMENT DEPARTMENT
HAZARDOUS & RADIOACTIVE MATERIALS BUREAU

FAX: (505) 827-4361

TELEPHONE: (505) 827-4358

****
*** ACTIVITY REPORT ***
****

TRANSMISSION OK

TX/RX NO.	4699
CONNECTION TEL	16675224
CONNECTION ID	
START TIME	09/27 12:40
USAGE TIME	00'42
PAGES	1
RESULT	OK

****
*** ACTIVITY REPORT ***
****

TRANSMISSION OK

TX/RX NO.	4697	
CONNECTION TEL		16675224
CONNECTION ID		
START TIME	09/27 12:31	
USAGE TIME	00'41	
PAGES	1	
RESULT	OK	

Department of Energy
Field Office, Albuquerque
Los Alamos Area Office
Los Alamos, New Mexico 87544

SEP 2 1993.

1993 SEP
RECEIVED
HAZARDOUS WASTE
PROGRAM

CERTIFIED MAIL - RETURN RECEIPT REQUESTED

Mr. Benito J. Garcia, Acting Bureau Chief
Hazardous and Radioactive Waste Bureau
New Mexico Environment Department
525 Camino de los Marquez
Santa Fe, New Mexico 87503

Dear Mr. Garcia:

Enclosed is clarifying information concerning the Packed Bed Reactor/Silent Discharge Plasma (PBR/SDP) experiment. This information is being submitted in response to a Notice of Deficiency (NOD) received from the New Mexico Environment Department (NMED) dated August 4, 1993.

This submittal consists of the following:

- Reprints of maps (Figures 2 and 5) which include legends, dates, and stream channels as requested in item 1 of the NOD;
- Additional information concerning prevailing wind patterns (wind rose) on supplemental sheets; and
- Written response to items 2 and 3 of the NOD.
- Item 4 of the response is additional information on Dr. Coogan's qualifications as requested during a telephone conversation with NMED personnel.

During a telephone conversation between Los Alamos National Laboratory (LANL) and NMED personnel on August 26, 1993, it was agreed that the wind rose diagram would be submitted as a separate sheet rather than printed directly on the maps. This arrangement was necessary because of the difficulty with incorporating the data directly onto the maps combined with the limited amount of time allowed for this response. The meteorological tower from which wind data was collected is located in Technical Area 6 and is indicated on the "RD&D Unit Key" map, Figure 2. The enclosed wind rose diagram represents the average wind pattern for day and night, at 10 meters above ground level for this location. All data was collected during

1992. The following information will assist with interpreting the wind rose:

- The direction of each line indicates the wind direction.
- The length of each line is proportional to the frequency at which the wind blows from the indicated direction.
- Different wind speed classes are indicated by line thickness (increased line thickness equals increased wind velocity).
- The number in the center of the wind rose indicates the frequency of calm winds (winds with velocity less than 0.5 m/s (1 mph).

Pending approval of the permit application, LANL plans to test a PBR/SDP unit for destruction of several types of hazardous wastes commonly generated by LANL operations.

If you have any questions or comments concerning this submittal, please contact Jon Mack of my staff at (505) 665-5026.

Sincerely

Jon Mack FOR

Joseph C. Vozella, Chief
Environment, Safety and Health
Branch

LESH:9JM-037

cc w/o attachments:
K. Sisneros,
NMED
1190 St. Francis Dr.
Santa Fe, NM 87502
T. Gunderson, EM-DO, LANL,
MS-J591
K. Hargis, EM-8, LANL,
MS-K490
T. Grieggs, EM-8,
(EM-8:93-2341-1), LANL,
MS-K490
D. Hjeresen, EE-AETO, LANL,
MS-F641

RESPONSE TO TECHNICAL NOTICE OF DEFICIENCY

Los Alamos National Laboratory
Research, Development and Demonstration (RD&D) Permit Application
Packed Bed Reactor/Silent Discharge Plasma (PBR/SDP) Unit

The following information is provided in response to the Technical Notice of Deficiency issued to LANL on August 4, 1993 by the State of New Mexico Environment Department (NMED) for the RD&D permit application dated December 1992 (and revised June 24, 1993 and July 14, 1993). This material is intended to serve as an addendum to the existing permit application.

1. **Site Location Standards [HWMR-7, Part IX; 40 CFR, 270.14(b)(19)(i), (iii), and (v)]**

   LANL must provide Figures 2 and 5 bearing the dates and legends as well as the words "Figure 2 and "Figure 5" printed on each respective map. Figure 5 must also show the surface waters including intermittent streams. Clearly indicate a wind rose on the figures.

   Response: Figure 2 and Figure 5 have been revised as requested. Wind rose information is separately attached.

2. **Design and Operation of the Facility [HWMR-7, Part V; 40 CFR, 264.31]**

   Explain the second sentence from the top of page 14 of the application text: i.e. why "the piping from the scrubber to the Building 128 vent...or back to the waste feed...will be constructed of either PVC or copper." Expound on the preferred choice of the use of PVC to the use of copper and vise versa.

   Response: The effluent exiting the final scrubber in the system is compatible with both copper and PVC piping and will not react with these materials. There is no particular distinction between the use of one type of material over the other. Rather, copper and PVC piping were selected because they are both easy to work with and are readily available. Copper piping has a slight advantage over PVC in that commercial fittings are easily obtained. PVC piping has a

slight advantage over copper in that it is lighter and less expensive. Either material may be used in this portion of the system configuration without impacting the experimental results.

3. **General Waste Analysis [HWMR-7, Part IX; 40 CFR, 264.13]**

Demonstrate how carbon monoxide, one of the end products generated by the RD&D treatment will be destroyed or eliminated without posing any danger to human health and the environment.

Response: Carbon monoxide is generated in trace quantities as a product of incomplete combustion. The purpose of the RD&D experiments is to determine, by varying the operating parameters, the optimal system performance capabilities. The objective will be to operate the system to maximize complete combustion of the input waste, and thereby minimize the production of carbon monoxide.

In the closed-loop system configuration, no gas effluents are vented to the atmosphere. Any trace quantities of carbon monoxide will be recycled back into the system, and the carbon monoxide will undergo further combustion to be converted to carbon dioxide.

In the open-loop configuration, no gas effluents are vented inside the building were personnel may be working. Rather gas effluents from the system are vented through a building stack to the outdoors. No personnel inside the building will be exposed to carbon monoxide from the treatment system. Previous experiments have shown that, when operating in steady-state, the system emits less than 20 parts per million (ppm) carbon monoxide. This level may be two or three times higher during brief periods when the system is starting up or shutting down. The OSHA permissible exposure limit is 35 ppm with a ceiling limit of 200 ppm for carbon monoxide. It is important to emphasize that the quantity of effluent generated during the RD&D experiments is relatively small, due to the small size of the research unit.

Provide reaction diagrams that indicate the thermal decomposition of the hazardous wastes during treatment in the combined PBR/SDP unit.

Response: It is not possible to provide reaction diagrams for the decomposition of the hazardous wastes, because the intermediates that are formed during the breakdown process are not known. Identifying these intermediates and the

degradation pathways are part of the research objective. Efforts are underway to model the breakdown of certain benchmark organics and predict the chemical intermediates that may be formed in the treatment system, but the degradation mechanism is complex and very dependent on the operating conditions of the system. The actual breakdown process will depend on parameters such as the flow rate of the system, the temperature of the packed bed, and the power supplied to the silent discharge plasma cells. It is the purpose of the research effort to begin to determine what intermediates are formed during the treatment process and to maximize the complete degradation of the input organic material into simple non-hazardous effluent by-products.

In the packed bed, the organic material is decomposed by the addition of oxygen in a combustion process. The ultimate by-products of combustion are carbon dioxide and water, and possibly acid or salt. The formation of acid or salt depends on whether the input organic material contains other elements (e.g., halogens, etc.). A simplified reaction diagram for the combustion process is:

$$\text{organics} + O_2 \rightarrow CO_2 + H_2O \text{ (+ acid or salt).}$$

However, the combustion process in the packed-bed will not always be complete. Some of the organics will be decomposed into various chemical intermediates (the identity of which cannot be predicted at this time). Trace quantities of the input organics may resist decomposition altogether. The silent discharge plasma unit, which follows the packed bed reactor, is designed to complete the degradation of the remaining organics and their chemical intermediates. Like the packed-bed the precise breakdown mechanism in the discharge plasma cannot be diagrammed, because it is dependent on operating system variables like flow rate and cell power. Degradation of the organics is accomplished by reactions with free-radicals that are produced in the discharge plasma; i.e., the hydroxyl (OH) radical and ozone (O^3). Simplified reaction diagrams of free-radical chemistry are:

$$\text{organics} + OH \rightarrow CO_2 + H_2O \text{ (+ acid or salt)}$$

$$\text{organics} + O^3 \rightarrow CO_2 + H_2O \text{ (+ acid or salt).}$$

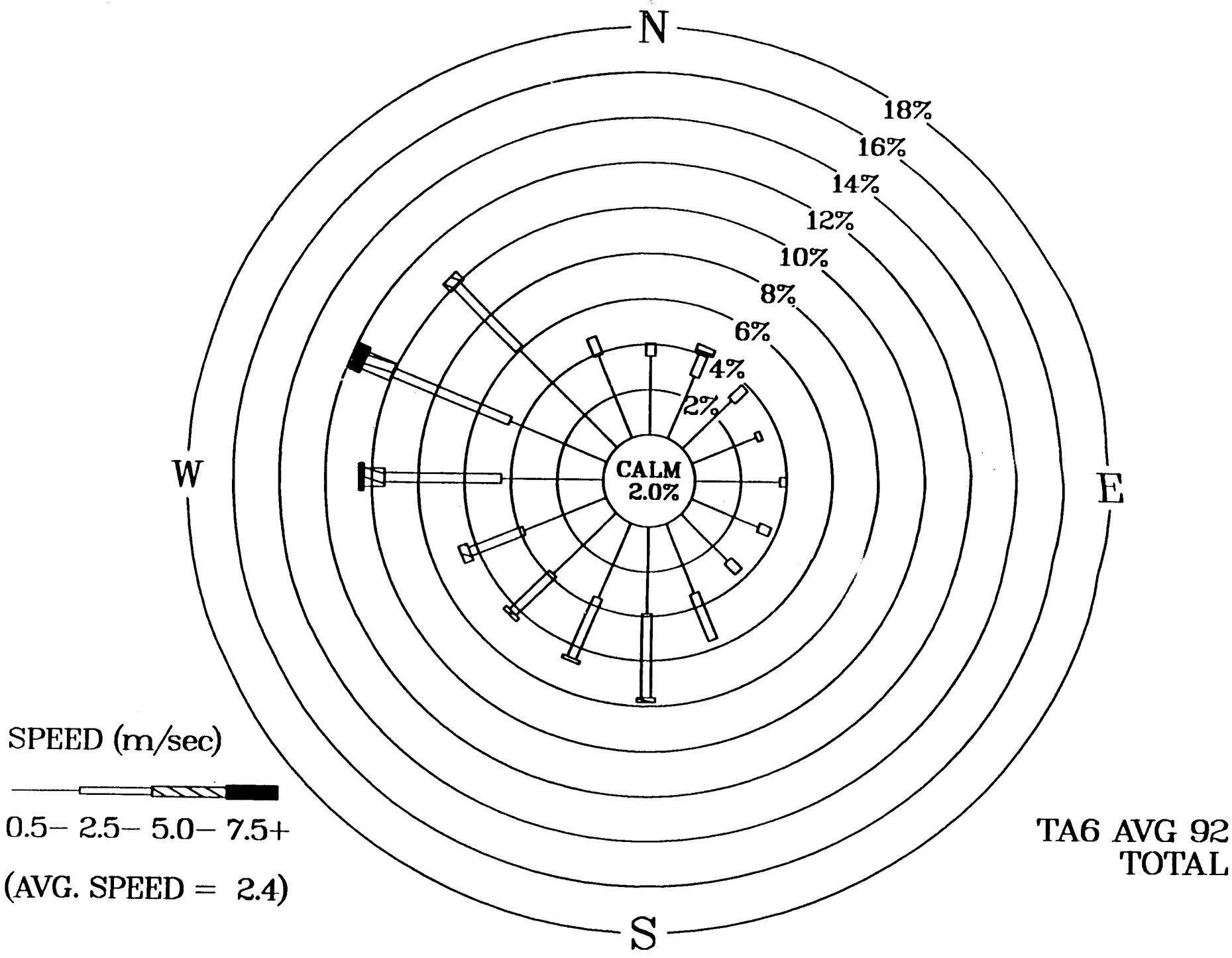
N
E
S
W
18%
16%
14%
12%
10%
8%
6%
4%
2%
CALM
2.0%
SPEED (m/sec)
0.5– 2.5– 5.0– 7.5+
(AVG. SPEED = 2.4)
TA6 AVG 92
TOTAL

John J. Coogan, Ph.D.

30-B Orange St.
Los Alamos, NM 87544
(505)661-6710

Los Alamos National Laboratory
Chemical and Laser Science Div.
CLS-6 MS E525
Los Alamos, NM 87454
(505)665-0186, 667-6080

Fields of Research

Environmental Remediation Techniques, Discharge Plasmas, Kinetic Modeling, Relativistic Electron Beams, Pulse Power and Flash X-ray Systems, Laser Physics, Spectroscopy.

Education

University of Texas, Dallas, TX	Ph.D. Physics	12/89
University of Texas, Austin and Dallas,TX	M.S. Physics	12/88
University of Texas, Dallas,TX	B.S.,*cum laude* Physics	5/85
University of Dallas, Irving,TX	B.A. Philosophy	5/83

Employment History and Experience

Los Alamos National Laboratory 2/90-present

Staff Member/Physicist. CLS-6 Advanced Laser and Systems Technology. Presently researching applications of pulse power technology to the treatment of mixed and chemical hazardous waste. This includes the use of relativistic electron-beams for aqueous based waste, packed-bed reactors (PBR) for combustible liquids and silent discharge plasmas (SDP) for gaseous based waste. Lead modeling scientist and experimental coordinator for alternative combustion laboratory, PI on research efforts studying mixed waste and off -gas treatment, and on a fundamental study of free radical formation in non-equilibrium plasmas using planar laser induced fluorescence. Mentor for DOE Science and Engineering Research Semester (SERS) and American Chemical Society/LANL SEED students. Member of PBR/SDP team awarded 1992 LANL Distinguished Performance Award.

Postdoctoral Fellow. CLS-7 Pulsed Power Systems. Initiated research program into the ignition and closure of diode plasmas within large area electron beam generators. This work expanded existing perveance models, tested novel emitter materials, designed several unique electron-beam diagnostics and first observed the screening effect in large-area diodes. Programmatic duties for high power KrF lasers for use in Inertial Confined Fusion (ICF) included: developing basic research proposals, optimizing e-beam pumping efficiency, studying vacuum breakdown, and developing and testing composite vacuum/gas barriers. Mentor for DOE SERS student.

University of Texas 5/85-12/89

Research Assistant, Center for Quantum Electronics under Dr. C. B. Collins. Dissertation : "A Flash X-Ray Source Driven by Stacked Blumleins Producing 500 keV Photons" Involved in feasibility study of the gamma-ray laser. Designed, constructed and characterized a flash x-ray source producing high peak powers at >100 Hz repetition rates used to excite nuclear materials, patent is pending. Also collaborated with the Centre National de la Recherche Scientifique (CNRS), France, in a study of the kinetics of high pressure rare gases using both dielectric controlled discharge and pulsed x-ray excitation. Proficient in the methods of UV, VUV and gamma-ray spectroscopy. Extensive experience with high power thyratrons.

Teaching Assistant and Assistant Research Scientist under Dr. J.W. Keto. Instructed physics students in senior laboratory class covering a variety of experimental techniques and supervised their semester long research projects. Assembled and maintained high-power dye laser for use in time resolved spectroscopy of excited rare gases.

Member of the American Physical Society, the Air and Waste Management Association, and ΣΠΣ
References upon request.

State of New Mexico
ENVIRONMENT DEPARTMENT
Harold Runnels Bulding
1190 St. Francis Drive, P.O. Box 26110
Santa Fe, New Mexico 87502
(505) 827-2850

BRUCE KING
GOVERNOR

JUDITH M. ESPINOSA
SECRETARY

RON CURRY
DEPUTY SECRETARY

December 16, 1993

Ms. Victoria Parrill
900 Calle Carmelita
Santa Fe, New Mexico 87501

RE: Comments on the Research, Development and Demonstration (RD&D1 and RD&D2) draft Permits

Dear Ms. Parrill,

This is to acknowledge receipt of your comments that were received on December 15, 1993 regarding the Los Alamos National Laboratory Research, Development and Demonstration Hydrothermal Processing unit and the Packed-Bed Reactor/Silent Discharge Plasma (RD&D1 and RD&D2) draft Permits. Your comments that "before approval may be given, the DOE must produce a full environmental impact statement and hold public hearings to receive and respond to public concerns" will be considered by the New Mexico Environment Department during the final determination of both draft Permits.

If you have further questions concerning this issue, you may contact Mr. Cornelius Amindyas of my staff at (505) 827-4308.

Sincerely,

Barbara Hoditschek

Barbara Hoditschek, Manager
RCRA Permits Program
Hazardous and Radioactive Materials Bureau

Enclosures

cc: File Red, 1993

From: Victoria Pauli
900 Calle Carmelita
Santa Fe NM 87501

Att: Earl Stubbs

Comments re:

Draft Research, Development & Demonstration permit LANL Hydrothermal Processing Unit.

Before approval might be given the DOE should produce a full environmental impact statement and hold public hearings to receive and respond to public concerns.

From: Victoria Pauli
900 Calle Carmelita
Santa Fe NM 875

Att: Cornelius Amindyas

Comments re:

Research, Development & Demonstration experiment (PBR/SDP) unit.

Before approval may be given, the DOE must produce a full environmental impact statement and hold public hearings to receive and respond to public concerns.

RECORD OF COMMUNICATION	☒ PHONE CALL ☐ DISCUSSION ☐ FIELD TRIP ☐ CONFERENCE ☐ OTHER (SPECIFY) (Record of item checked above)	
TO: Tony Greggs LANL	FROM: Cornelius Amindyas	DATE 8/12/93 TIME 11:55

SUBJECT
Permit Attachments 4 & 8.

SUMMARY OF COMMUNICATION

Tony Greggs was asked to include their application attachments 4 & 8 on a diskette for our use in the Technical review & Permit drafting period.

CONCLUSIONS, ACTION TAKEN OR REQUIRED

~~Tony~~ OK promised to look into that and admitted they only have it on hard copy.

CA

INFORMATION COPIES
TO:

State of New Mexico
ENVIRONMENT DEPARTMENT
Harold Runnels Building
1190 St. Francis Drive, P.O. Box 26110
Santa Fe, New Mexico 87502
(505) 827-2850

BRUCE KING
GOVERNOR

JUDITH M. ESPINOSA
SECRETARY

RON CURRY
DEPUTY SECRETARY

CERTIFIED MAIL
RETURN RECEIPT REQUESTED

August 4, 1993

Mr. Jerry Bellows, Area Manager
Department of Energy
Los Alamos Area Office
528 35th Street
Los Alamos, New Mexico, 87544

RE: Notice of Deficiency (NOD) - Technical Adequacy of LANL's Packed-Bed Reactor/Silent Discharge Plasma (PBR/SDP) Permit Application
EPA ID No. NM0890010515

The New Mexico Environment Department (NMED) has reviewed for technical adequacy, the December 1992 Research, Development and Demonstration permit application for the Packed-Bed Reactor/ Silent Discharge Plasma (PBR/SDP) Unit as required under the Resource Conservation and Recovery Act (RCRA).

After reviewing the permit application and additional support information, the NMED has found the application to be technically deficient. The enclosed attachment lists the required information necessary for NMED to begin preparation of a draft permit.

The information needed in the attachment must be submitted to NMED within thirty (30) days of receipt of this NOD. Failure to submit the required information in this designated time may result in permit denial.

If you have any question concerning the NOD, you may contact Cornelius Amindyas of my staff at (505) 827-4308.

Sincerely,

Barbara Hoditschek

Barbara Hoditschek, Program Manager
RCRA Permits Section
Hazardous and Radioactive Materials Bureau

cc: Benito Garcia, Chief, HRMB
Jon Mack, ES&H, LAAO
Tony Grieggs, EM-8, LANL, MS-K490
File Red-93

ATTACHMENT
NOTICE OF DEFICIENCY
Technical Adequacy Review

August 4, 1993

1. Site Location Standards
[HWMR-7, Part IX, 40 CFR, § 270.14(b)(19)(i); (iii) and (v)]

LANL must provide Figures 2 and 5 bearing the dates and legends as well as the words "Figure 2" and " Figure 5" printed on each respective map. Figure 5 must also show the surface waters including intermittent streams. Clearly indicate a wind rose (i.e. prevailing wind speed and direction) on the figures.

2. Design and Operation of Facility
[HWMR-7, Part V, 40 CFR, § 264.31]

Explain the second sentence from the top of page 14 of the application text: i.e. why "the piping from the scrubber to the Building 128 vent... or back to the waste feed... will be constructed of either PVC or copper." Expound on the preferred choice of the use of PVC to the use of copper and vice versa.

3. General Waste Analysis
[HWMR-7, Part IX, 40 CFR, § 264.13]

Demonstrate how carbon monoxide, one of the end products generated by the RD&D treatment will be destroyed or eliminated without posing any danger to human health and the environment.

Provide reaction diagrams that indicate the thermal decomposition of the hazardous wastes during treatment in the combined PBR/SDP unit.

Department of Energy
Field Office, Albuquerque
Los Alamos Area Office
Los Alamos, New Mexico 87544

AUG 4 1993

CERTIFIED MAIL - RETURN RECEIPT REQUESTED

Mr. Benito J. Garcia, Acting Bureau Chief
Hazardous and Radioactive Waste Bureau
New Mexico Environment Department
Harold Runnels Building
1190 St. Francis Drive
Santa Fe, New Mexico 87503

Dear Mr. Garcia:

This letter is to transmit payment by the Department of Energy and the University of California of the permit fee ($22,000.00) as requested in your letter of July 9, 1993. This fee has been assessed by the New Mexico Environment Department to complete the technical review of the Research, Development, and Demonstration permit application for the Packed Bed Reactor/Silent Discharge Plasma experiment. This remittance also covers permit preparation and public participation (Reference: Activity 50, Rev. Code 169, Deferred Rev. Code 280075 [A 50-DRC 280075]).

If you have any questions or comments concerning this submittal, please contact Jon Mack of my staff at (505) 665-5026.

Sincerely,

Jerry L. Bellows
Area Manager

LESH:9JV-025

Enclosure

cc w/o enclosure:
A. Tiedman, ADO, LANL, MS-A120
T. Gunderson, EM-DO, LANL, MS-J591
K. Hargis, EM-8, LANL, MS-K490
A. Grieggs, EM-8, LANL MS-K490
D. Hjersen, EE/AETO, LANL, MS-F641
L. Rosocha, CLS-6, LANL, MS-J564

RECEIVED
AUG 0 5 1993
Sandra Ortiz

LOS ALAMOS NATIONAL LABORATORY
UNIVERSITY OF CALIFORNIA
P.O. BOX 1663, MS P240
LOS ALAMOS, NEW MEXICO 87545

564408

95-101
1070

Check No.
564408

Pay
TWENTY TWO THOUSAND AND NO/100 DOLLARS

MO.	DAY	YR.
08	03	93

$ *******22,000.00

PLEASE CASH PROMPTLY
SUBJECT TO CANCELLATION
NINETY (90) DAYS AFTER DATE

To The Order Of
NEW MEXICO ENVIRONMENT DEPT
HAZARDOUS WASTE PERMIT FEES

MR Patterson

LOS ALAMOS NATIONAL BANK
LOS ALAMOS, NEW MEXICO 87544

⑈564408⑈ ⑆107001012⑆ 00 685259⑈01

Department of Energy
Field Office, Albuquerque
Los Alamos Area Office
Los Alamos, New Mexico 87544

JUL 22 1993

RECEIVED
JUL 23 1993

CERTIFIED MAIL - RETURN RECEIPT REQUESTED

Mr. Benito Garcia
Bureau Chief
New Mexico Environment Department
Hazardous and Radioactive Materials Bureau
525 Camino de los Marquez Place
Santa Fe, NM 87502

Dear Mr. Garcia:

Enclosed is a reformatted copy of the Los Alamos National Laboratory's (LANL) Research and Development Permit Application for the Packed Bed Reactor/Silent Discharge Plasma Unit. The changes in the formatting are a result of a meeting on July 7, 1993, between members of your permitting staff, the Department of Energy (DOE) and LANL staff.

The changes consist of moving portions of the application into attachments. No actual changes in the content of the document were made. The reformatted version of the application does not include the two large-size drawings (RD&D Unit Key Map and Topographic Map). These large-size figures should be retrieved from the previous version of the permit application.

Also, please find enclosed a diskette containing the reformatted application. The material is formatted in Wordperfect 5.1. As with the previous application versions, the application figures and several of the attachments are not on the diskette.

If you should have any questions concerning this transmittal, please feel free to call Jon Mack of my staff at 665-5026, or Tony Grieggs, EM-8, LANL, at 665-0451.

Sincerely,

Joseph C. Vozella, Chief
Environment, Safety and Health
Branch

LESH:3JM-060

Enclosure:

cc w/o enclosure:
J. Mack, ES&H, LAAO
K. Hargis, EM-8, LANL, MS-K490
T. Grieggs, EM-8, LANL, MS-K490

ENVIRONMENT DEPARTMENT ROUTING SLIP

Letter To: MR. JOSEPH O. VOZELLA LANL

For: Barbara Hoditschek SIGNATURE

Drafted By: Cornelius Amindo 8/2/93 Date

Subject: Technical Adequacy MOD

FINAL DECISION NEEDED BY: ASAP REASON to meet FY 93 deadline

Review:

		Initial	Date Rec'd	Date Apprv'd
Barbara Hoditschek	PROGRAM MANAGER	BH	8/3	8/3
Stephanie Stoddard	BUREAU CHIEF	SKS	8/3/93	8/3/93
Carl Stubbs	DISTRICT MANAGERS	CS	8/3/93	8/3/93
	GRANTS			
	ACCOUNTING			
	BUDGETS			
	LEGAL REVIEW			
	ASD DIRECTOR			
	WMM DIRECTOR			
	ERD DIRECTOR			
	DEPUTY SECRETARY			
	SECRETARY			
	OTHER			

COMMENTS BY DRAFTER OR REVIEWER(S):

Copy for BH

State of New Mexico
ENVIRONMENT DEPARTMENT
Harold Runnels Building
1190 St. Francis Drive, P.O. Box 26110
Santa Fe, New Mexico 87502
(505) 827-2850

BRUCE KING
GOVERNOR

JUDITH M. ESPINOSA
SECRETARY

RON CURRY
DEPUTY SECRETARY

CERTIFIED MAIL
RETURN RECEIPT REQUESTED

August 4, 1993

Mr. Jerry Bellows, Area Manager
Department of Energy
Los Alamos Area Office
528 35th Street
Los Alamos, New Mexico, 87544

RE: Notice of Deficiency (NOD) - Technical Adequacy of LANL's Packed-Bed Reactor/Silent Discharge Plasma (PBR/SDP) Permit Application
EPA ID No. NM0890010515

The New Mexico Environment Department (NMED) has reviewed for technical adequacy, the December 1992 Research, Development and Demonstration permit application for the Packed-Bed Reactor/ Silent Discharge Plasma (PBR/SDP) Unit as required under the Resource Conservation and Recovery Act (RCRA).

After reviewing the permit application and additional support information, the NMED has found the application to be technically deficient. The enclosed attachment lists the required information necessary for NMED to begin preparation of a draft permit.

The information needed in the attachment must be submitted to NMED within thirty (30) days of receipt of this NOD. Failure to submit the required information in this designated time may result in permit denial.

If you have any question concerning the NOD, you may contact Cornelius Amindyas of my staff at (505) 827-4308.

Sincerely,

Barbara Hoditschek

Barbara Hoditschek, Program Manager
RCRA Permits Section
Hazardous and Radioactive Materials Bureau

cc: Benito Garcia, Chief, HRMB
Jon Mack, ES&H, LAAO
Tony Grieggs, EM-8, LANL, MS-K490
File Red-93

ATTACHMENT
NOTICE OF DEFICIENCY
Technical Adequacy Review

August 4, 1993

1. Site Location Standards
[HWMR-7, Part IX, 40 CFR, § 270.14(b)(19)(i); (iii) and (v)]

LANL must provide Figures 2 and 5 bearing the dates and legends as well as the words "Figure 2" and " Figure 5" printed on each respective map. Figure 5 must also show the surface waters including intermittent streams. Clearly indicate a wind rose (i.e. prevailing wind speed and direction) on the figures.

2. Design and Operation of Facility
[HWMR-7, Part V, 40 CFR, § 264.31]

Explain the second sentence from the top of page 14 of the application text: i.e. why "the piping from the scrubber to the Building 128 vent... or back to the waste feed... will be constructed of either PVC or copper." Expound on the preferred choice of the use of PVC to the use of copper and vice versa.

3. General Waste Analysis
[HWMR-7, Part IX, 40 CFR, § 264.13]

Demonstrate how carbon monoxide, one of the end products generated by the RD&D treatment will be destroyed or eliminated without posing any danger to human health and the environment.

Provide reaction diagrams that indicate the thermal decomposition of the hazardous wastes during treatment in the combined PBR/SDP unit.

M E M O R A N D U M

To: Barbara Hoditschek, RCRA Program Manager

From: Cornelius Amindyas, RCRA Permit Writer

Subject: Working Visit to LANL on 7/7/93

Date: July 6, 1993

This is to inform you that LANL has got the clearance for me to visit the RD&D Packed-Bed Reactor/Silent Discharge Plasma (PBR/SDP) Unit. The visit is scheduled for Wednesday, July 7, 1993. I am expected to be at Los Alamos between 8:00 am and 9:00 am to see the PBR/SDP Unit and ask any pertinent questions connected therewith. I should be back in the office by noon of the same day.

Sincerely,

7/6/93.

Cornelius Amindyas.

P 418 865 281

Receipt for Certified Mail

No Insurance Coverage Provided
Do not use for International Mail
(See Reverse)

UNITED STATES POSTAL SERVICE

Sent to Mr. Walter Dau	
Street and No. 1606 Air Base Wend	
P.O., State and ZIP Code #13. NM 87117	
Postage	$
Certified Fee	
Special Delivery Fee	
Restricted Delivery Fee	
Return Receipt Showing to Whom & Date Delivered	
Return Receipt Showing to Whom, Date, and Addressee's Address	
TOTAL Postage & Fees	$
Postmark or Date	

PS Form 3800, June 1991

Sent 5/14/93

P 418 865 342

Receipt for Certified Mail

No Insurance Coverage Provided
Do not use for International Mail
(See Reverse)

UNITED STATES POSTAL SERVICE

Sent to Mr. Terry Bellanz	
Street and No. 538 35th St	
P.O., State and ZIP Code Los Alamos, NM	
Postage	$87544
Certified Fee	
Special Delivery Fee	
Restricted Delivery Fee	
Return Receipt Showing to Whom & Date Delivered	
Return Receipt Showing to Whom, Date, and Addressee's Address	
TOTAL Postage & Fees	$
Postmark or Date	

PS Form 3800, June 1991

LOS ALAMOS NATIONAL LABORATORY

ENVIRONMENTAL PROTECTION (EM-8)

HAZARDOUS AND SOLID WASTE SECTION

FAX TRANSMITTAL SHEET

FAX #: (505) 667-5224 VERIFICATION #: (505) 665-0792

DATE: 7-6-93 ID #_____ LOG NO: EM-8:93-FAX-_____

FROM: Tony Grieggs PHONE #: (___) 665-0451

TO: Cornelius FAX #: (___) 827-4361 VERIFY PHONE # (___) _____

GRP/ORG: NMED

TO: _____ FAX #: (___) _____ VERIFY PHONE # (___) _____

GRP/ORG: _____

TO: _____ FAX #: (___) _____ VERIFY PHONE # (___) _____

GRP/ORG: _____

MESSAGE: Scheduled meeting:
Arrival at DOE LAAO around 8:00 a.m. —
— to meet with Jody Plum
Must bring passport

NUMBER OF PAGES TO FOLLOW: _____

Cy: EM-8 Fax File
CRM-4, MS A150

SECTION LEADER

GROUP OR DEPUTY GROUP LEADER

May 28, 1993

EI RONMENT DEPARTMENT ROUTING IP

Letter To: MR. JOE VOZELLA - LANL

For: BARBARA HODITSCHEK'S SIGNATURE

Drafted By: CORNELIUS AMINDYAS June 30, 1993
Date

Subject: RD & D (RCRA) FEE

FINAL DECISION NEEDED BY: ASAP REASON

Review:

		Initial	Date Rec'd	Date Apprv'd
BARBARA HODITSCHEK	PROGRAM MANAGER	BH	7/9/93	7/9/93
Marc Sides		MS	7/9/93	7/9/93
TOM TATKIN		TT	7/9/93	7/9/93
	GRANTS			
	ACCOUNTING			
	BUDGETS			
	LEGAL REVIEW			
	ASD DIRECTOR			
	WMM DIRECTOR			
	ERD DIRECTOR			
	DEPUTY SECRETARY			
	SECRETARY			
	OTHER			

COMMENTS BY DRAFTER OR REVIEWER(S):

State of New Mexico
ENVIRONMENT DEPARTMENT
Harold Runnels Building
1190 St. Francis Drive, P.O. Box 26110
Santa Fe, New Mexico 87502
(505) 827-2850

BRUCE KING
GOVERNOR

JUDITH M. ESPINOSA
SECRETARY

RON CURRY
DEPUTY SECRETARY

CERTIFIED MAIL
RETURN RECEIPT REQUESTED

July 9, 1993

Mr. Joe Vozella, Acting Chief
Environment, Safety and Health Branch
Department of Energy
Los Alamos Area Office
528 35th Street
Los Alamos, New Mexico, 87544

RE: **Resource Conservation & Recovery Act Permit Fee Assessment for the Research, Development and Demonstration (RD&D) Packed Bed Reactor/Silent Discharge Plasma Permit Application.**

Dear Mr. Vozella,

The New Mexico Environment Department (NMED) concluded its administrative completeness review of the Department of Energy-Los Alamos National Laboratory (LANL) Packed Bed Reactor/Silent Discharge Plasma (PBR/SDP) RD&D permit application. A Notice of Deficiency (NOD) was sent to LANL on May 10, 1993. All items in the NOD have been adequately addressed by LANL in accordance with the New Mexico Hazardous Waste Management Regulations (HWMR-7), Part IX, 40 CFR §270.10(c).

The New Mexico Hazardous Waste Fee Regulations (HWFR-1) require the assessment of permit fees when all information is received that satisfy administrative completeness of an application. The permit fee for the LANL PBR/SDP unit is $22,000.00. A fee statement and worksheet are enclosed. In accordance with the intent of HWFR-1, a primary consideration in assessing permit fees is the amount of staff time involved in each permitting function.

<u>Basic Permit Fee</u>

The basic permit fee is for review of numerous conditions common

to all permits. These conditions are fully described in the New Mexico Hazardous Waste Management Regulations (HWMR-7), Part IX, §270).

Unit Fee

LANL applied for an RD&D permit for their PBR/SDP Unit. The unit must be evaluated and specifications considered with respect to human health and the environment.

Public Participation Fee

A public participation fee of $4,000.00 which is typically charged to all hazardous waste management permit applicants, has been included in the total amount. This fee is included, because, in response to the increasing level of public interest in the permitting process, the NMED now automatically schedules public information meetings in communities potentially affected by the issuance of new or modified operating permits.

Review of the application for technical adequacy will begin upon receipt of the permit fee, which is due within thirty (30) calendar days of your receipt of this letter. Failure to pay the fee within this period may result in a permit denial.

If you have any questions, please contact me or Cornelius Amindyas of my staff at (505) 827-4308.

Sincerely,

Barbara Hoditschek

Barbara Hoditschek, Program Manager,
RCRA Permits
Hazardous and Radioactive Materials Bureau

Enclosures (2)

cc: David Neleigh, EPA Region 6 (w/o encl.)
Benito Garcia, Chief, HRMB (w/o encl.)
Tony Grieggs, EM-8, LANL (w/o encl.)
File-Red 93

CMWO WASTE DATA FORM COPY

Container # : C92031222	Requestor : GLADWELL CLIFFORD Group : MP8 Phone : 75973
CWDR # : 1003048	TA : 53 Building: 2 Room: 105
DT_ID # : 92791	Z # : 032777

SATELLITE

WASTE GENERATED OR ACCUMULATED IN A RADIOLOGICAL MATERIAL MANAGEMENT AREA: NO

WASTE ACCUMULATED OR STORED IN A SECURITY AREA: NO

Shipping Name : WASTE FLAMMABLE LIQUID, N.O.S. (ACETONE,ALCOHOL)
Hazard Code : Flammable Liquid
DOT # : UN1993

EM-7 Code : 00	Other Con # :
Storage Code : B1	Container Type: DM
RGN # : 101	Container Vol: 30 G
Treat/Disp Loc : OSCO	Reviewed By : 090019
Transported By : CWM	Data Entry By : 101956
	Qa Check By :
Other Document :	
AreaG/J Loc :	Picked Up By/Date&Time: 109153 / 14-SEP-92 01:15
	Load Check By/Date: 109141 / 14-SEP-92
Treat/Ship By: CWM	Pickup Update Check By :
Treat/Ship Date: 27-OCT-92	
	Off-Site Check By/Date :
TSDF Date :	
Destruction # :	Update By/Date : 107045 / 27-OCT-92
Destruction Date :	Final Update Check By :

Item 1 : MIXED ACETONE & ETHANOL
WPN : 04285 Volume: 30 G Weight: 50 P
EPA Code : F003

Container # : C92031275	Requestor : BINGHAM BARRY L Group : MST6 Phone : 71147 TA : 03 Building : 66 Room : R112 Z # : 095788
CWDR # : 1003185	
DT_ID # : 92791	

SATELLITE

WASTE GENERATED OR ACCUMULATED IN A RADIOLOGICAL MATERIAL MANAGEMENT AREA: NO

WASTE ACCUMULATED OR STORED IN A SECURITY AREA: YES

Shipping Name : HAZARDOUS WASTE, LIQUID, N.O.S. (1,1,1 TRICHLOROETHANE)
Hazard Code : ORM-E
DOT # : NA9189

EM-7 Code : 00 Storage Code : B6 RGN # : 17	Other Con # : Container Type : DM Container Vol : 30 G
Treat/Disp Loc : OSCO Transported By : CWM Other Document : AreaG/J Loc : Treat/Ship By : CWM Treat/Ship Date : 27-OCT-92 TSDF Date : Destruction # : Destruction Date :	Reviewed By : 090019 Data Entry By : 100600 Qa Check By : Picked Up By/Date&Time : 088896 / 10-SEP-92 01:25 Load Check By/Date : 109141 / 10-SEP-92 Pickup Update Check By : Off-Site Check By/Date : Update By/Date : 107045 / 27-OCT-92 Final Update Check By :

Item 1 : PUMP OIL W/TRACE 1,1,1 TRICHLOROETHANE
WPN : 04255 Volume: 35 G Weight: 230 P
EPA Code : F001

Container # : C92031163	Requestor : BOOKWALTER EARL C Group : JCI Phone : 74231 TA : 03 Building: 38 Room: 103 Z # : 070052
CWDR # : 1003140	
DT_ID # : 92791	

LESS THAN 90 DAYS (START DATE: 01-JUL-92)

WASTE GENERATED OR ACCUMULATED IN A RADIOLOGICAL MATERIAL MANAGEMENT AREA: NO

WASTE ACCUMULATED OR STORED IN A SECURITY AREA: NO

Shipping Name : WASTE PAINT RELATED MATERIAL
Hazard Code : Flammable Liquid
DOT # : NA1263

EM-7 Code : 00 Storage Code : B1 RGN # : 101	Other Con # : Container Type : DM Container Vol : 55 G
Treat/Disp Loc : OSCO Transported By : CWM Other Document : AreaG/J Loc :	Reviewed By : 090019 Data Entry By : 100600 Qa Check By : Picked Up By/Date&Time: 093697 / 31-AUG-92 03:15 Load Check By/Date: 109141 / 31-AUG-92
Treat/Ship By: CWM Treat/Ship Date: 27-OCT-92	Pickup Update Check By : Off-Site Check By/Date :
TSDF Date : Destruction # : Destruction Date :	Update By/Date : 107045 / 27-OCT-92 Final Update Check By :

Item 1 : LACQUER THINNER
WPN : 01584
EPA Code : D001

Volume: 55 G Weight: 500 P

PROPOSED REVISION

TABLE11.6
PERMIT FEE WORKSHEET

FACILITY NAME DOE / LOS ALAMOS NATIONAL LABORATORY

EPA ID NUMBER NM 0890010515

PERMITTED ACTIVITY (By Unit) RESEARCH, DEVELOPMENT & DEMONSTRATION - PACKED - BED REACTOR / SILENT DISCHARGE PLASMA

GROUNDWATER MONITORING? YES ___ NO X

ESCAPED CONSTITUENTS? YES ___ NO X

PUBLIC PARTICIPATION? YES ___ NO X

	FEE CALCULATION	REMARKS
BASIC PERMIT	$ 10,000	
OPERATING UNIT 1	8,000	
OPERATING UNIT 2		
OPERATING UNIT 3		
OPERATING UNIT 4		
OPERATING UNIT 5		
OPERATING UNIT 6		
POST-CLOSURE CARE UNIT 1		
POST-CLOSURE CARE UNIT 2		
POST-CLOSURE CARE UNIT 3		
POST-CLOSURE CARE UNIT 4		
SUB TOTAL	$ 18,000	
PUBLIC PARTICIPATION FEE	4,000	
TOTAL FEE DUE	$ 22,000	

State of New Mexico
ENVIRONMENT DEPARTMENT
Harold Runnels Building
1190 St. Francis Drive, P.O. Box 26110
Santa Fe, New Mexico 87502
(505) 827-2850

BRUCE KING
GOVERNOR

JUDITH M. ESPINOSA
SECRETARY

RON CURRY
DEPUTY SECRETARY

CERTIFIED MAIL
RETURN RECEIPT REQUESTED

July 9, 1993

Mr. Joe Vozella, Acting Chief
Environment, Safety and Health Branch
Department of Energy
Los Alamos Area Office
528 35th Street
Los Alamos, New Mexico, 87544

RE: **Resource Conservation & Recovery Act Permit Fee Assessment for the Research, Development and Demonstration (RD&D) Packed Bed Reactor/Silent Discharge Plasma Permit Application.**

Dear Mr. Vozella,

The New Mexico Environment Department (NMED) concluded its administrative completeness review of the Department of Energy-Los Alamos National Laboratory (LANL) Packed Bed Reactor/Silent Discharge Plasma (PBR/SDP) RD&D permit application. A Notice of Deficiency (NOD) was sent to LANL on May 10, 1993. All items in the NOD have been adequately addressed by LANL in accordance with the New Mexico Hazardous Waste Management Regulations (HWMR-7), Part IX, 40 CFR §270.10(c).

The New Mexico Hazardous Waste Fee Regulations (HWFR-1) require the assessment of permit fees when all information is received that satisfy administrative completeness of an application. The permit fee for the LANL PBR/SDP unit is $22,000.00. A fee statement and worksheet are enclosed. In accordance with the intent of HWFR-1, a primary consideration in assessing permit fees is the amount of staff time involved in each permitting function.

Basic Permit Fee

The basic permit fee is for review of numerous conditions common

to all permits. These conditions are fully described in the New Mexico Hazardous Waste Management Regulations (HWMR-7), Part IX, §270).

Unit Fee

LANL applied for an RD&D permit for their PBR/SDP Unit. The unit must be evaluated and specifications considered with respect to human health and the environment.

Public Participation Fee

A public participation fee of $4,000.00 which is typically charged to all hazardous waste management permit applicants, has been included in the total amount. This fee is included, because, in response to the increasing level of public interest in the permitting process, the NMED now automatically schedules public information meetings in communities potentially affected by the issuance of new or modified operating permits.

Review of the application for technical adequacy will begin upon receipt of the permit fee, which is due within thirty (30) calendar days of your receipt of this letter. Failure to pay the fee within this period may result in a permit denial.

If you have any questions, please contact me or Cornelius Amindyas of my staff at (505) 827-4308.

Sincerely,

Barbara Hoditschek

Barbara Hoditschek, Program Manager,
RCRA Permits
Hazardous and Radioactive Materials Bureau

Enclosures (2)

cc: David Neleigh, EPA Region 6 (w/o encl.)
Benito Garcia, Chief, HRMB (w/o encl.)
Tony Grieggs, EM-8, LANL (w/o encl.)
File-Red 93

State of New Mexico
ENVIRONMENT DEPARTMENT
Harold Runnels Building
1190 St. Francis Drive, P.O. Box 26110
Santa Fe, New Mexico 87502
(505) 827-2850

BRUCE KING
GOVERNOR

JUDITH M. ESPINOSA
SECRETARY

RON CURRY
DEPUTY SECRETARY

CERTIFIED MAIL
RETURN RECEIPT REQUESTED

HAZARDOUS WASTE PERMIT FEE

Facility Name:	US Department of Energy (DOE)/Los Alamos National Laboratory (LANL)
Facility Owner:	Jerry Bellows, US DOE
Facility Operator:	Allen J. Tiedman, LANL
Facility ID number:	NM0890010515
Permit Fee Due:	$22,000
Permitted Unit:	Packed Bed Reactor/Silent Discharge Plasma
Date of Bill:	July 6,1993

Your Research Development and Demonstration Permit Application has been accepted for technical review and permit preparation. In accordance with the New Mexico hazardous Waste Management Regulations, the fee indicated above has been assessed. Please, send to the letter-head address above, payment in the form of a check, made out to:

NMED Hazardous Waste Permit Fees

Please indicate on the remittance the following information:

Activity 50, Rev. Code 169, Deferred Rev. Code 230075 (A 50-DRC 280075)

Thank You.

PROPOSED REVISION

TABLE11.6
PERMIT FEE WORKSHEET

FACILITY NAME DOE / LOS ALAMOS NATIONAL LABORATORY

EPA ID NUMBER NM 0890010515

PERMITTED ACTIVITY (By Unit) RESEARCH, DEVELOPMENT & DEMONSTRATION - PACKED - BED REACTOR / SILENT DISCHARGE PLASMA

GROUNDWATER MONITORING? YES ___ NO X

ESCAPED CONSTITUENTS? YES ___ NO X

PUBLIC PARTICIPATION? YES ___ NO X

	FEE CALCULATION	REMARKS
BASIC PERMIT	$ 10,000	
OPERATING UNIT 1	8,000	
OPERATING UNIT 2		
OPERATING UNIT 3		
OPERATING UNIT 4		
OPERATING UNIT 5		
OPERATING UNIT 6		
POST-CLOSURE CARE UNIT 1		
POST-CLOSURE CARE UNIT 2		
POST-CLOSURE CARE UNIT 3		
POST-CLOSURE CARE UNIT 4		
SUB TOTAL	$ 18,000	
PUBLIC PARTICIPATION FEE	4,000	
TOTAL FEE DUE	$ 22,000	

RESPONSE TO TECHNICAL NOTICE OF DEFICIENCY

Los Alamos National Laboratory
Research, Development and Demonstration (RD&D) Permit Application
Packed Bed Reactor/Silent Discharge Plasma (PBR/SDP) Unit

The following information is provided in response to the Technical Notice of Deficiency issued to LANL on August 4, 1993 by the State of New Mexico Environment Department (NMED) for the RD&D permit application dated December 1992 (and revised June 24, 1993 and July 14, 1993). This material is intended to serve as an addendum to the existing permit application.

1. **Site Location Standards [HWMR-7, Part IX; 40 CFR, 270.14(b)(19)(i), (iii), and (v)]**

   LANL must provide Figures 2 and 5 bearing the dates and legends as well as the words "Figure 2 and "Figure 5" printed on each respective map. Figure 5 must also show the surface waters including intermittent streams. Clearly indicate a wind rose on the figures.

   Response: Figure 2 and Figure 5 have been revised as requested. Wind rose information is separately attached.

2. **Design and Operation of the Facility [HWMR-7, Part V; 40 CFR, 264.31]**

   Explain the second sentence from the top of page 14 of the application text: i.e. why "the piping from the scrubber to the Building 128 vent...or back to the waste feed...will be constructed of either PVC or copper." Expound on the preferred choice of the use of PVC to the use of copper and vise versa.

   Response: The effluent exiting the final scrubber in the system is compatible with both copper and PVC piping and will not react with these materials. There is no particular distinction between the use of one type of material over the other. Rather, copper and PVC piping were selected because they are both easy to work with and are readily available. Copper piping has a slight advantage over PVC in that commercial fittings are easily obtained. PVC piping has a

slight advantage over copper in that it is lighter and less expensive. Either material may be used in this portion of the system configuration without impacting the experimental results.

3. **General Waste Analysis [HWMR-7, Part IX; 40 CFR, 264.13]**

Demonstrate how carbon monoxide, one of the end products generated by the RD&D treatment will be destroyed or eliminated without posing any danger to human health and the environment.

Response: Carbon monoxide is generated in trace quantities as a product of incomplete combustion. The purpose of the RD&D experiments is to determine, by varying the operating parameters, the optimal system performance capabilities. The objective will be to operate the system to maximize complete combustion of the input waste, and thereby minimize the production of carbon monoxide.

In the closed-loop system configuration, no gas effluents are vented to the atmosphere. Any trace quantities of carbon monoxide will be recycled back into the system, and the carbon monoxide will undergo further combustion to be converted to carbon dioxide.

In the open-loop configuration, no gas effluents are vented inside the building were personnel may be working. Rather gas effluents from the system are vented through a building stack to the outdoors. No personnel inside the building will be exposed to carbon monoxide from the treatment system. Previous experiments have shown that, when operating in steady-state, the system emits less than 20 parts per million (ppm) carbon monoxide. This level may be two or three times higher during brief periods when the system is starting up or shutting down. The OSHA permissible exposure limit is 35 ppm with a ceiling limit of 200 ppm for carbon monoxide. It is important to emphasize that the quantity of effluent generated during the RD&D experiments is relatively small, due to the small size of the research unit.

Provide reaction diagrams that indicate the thermal decomposition of the hazardous wastes during treatment in the combined PBR/SDP unit.

Response: It is not possible to provide reaction diagrams for the decomposition of the hazardous wastes, because the intermediates that are formed during the breakdown process are not known. Identifying these intermediates and the

degradation pathways are part of the research objective. Efforts are underway to model the breakdown of certain benchmark organics and predict the chemical intermediates that may be formed in the treatment system, but the degradation mechanism is complex and very dependent on the operating conditions of the system. The actual breakdown process will depend on parameters such as the flow rate of the system, the temperature of the packed bed, and the power supplied to the silent discharge plasma cells. It is the purpose of the research effort to begin to determine what intermediates are formed during the treatment process and to maximize the complete degradation of the input organic material into simple non-hazardous effluent by-products.

In the packed bed, the organic material is decomposed by the addition of oxygen in a combustion process. The ultimate by-products of combustion are carbon dioxide and water, and possibly acid or salt. The formation of acid or salt depends on whether the input organic material contains other elements (e.g., halogens, etc.). A simplified reaction diagram for the combustion process is:

$$\text{organics} + O_2 \rightarrow CO_2 + H_2O \text{ (+ acid or salt).}$$

However, the combustion process in the packed-bed will not always be complete. Some of the organics will be decomposed into various chemical intermediates (the identity of which cannot be predicted at this time). Trace quantities of the input organics may resist decomposition altogether. The silent discharge plasma unit, which follows the packed bed reactor, is designed to complete the degradation of the remaining organics and their chemical intermediates. Like the packed-bed the precise breakdown mechanism in the discharge plasma cannot be diagrammed, because it is dependent on operating system variables like flow rate and cell power. Degradation of the organics is accomplished by reactions with free-radicals that are produced in the discharge plasma; i.e., the hydroxyl (OH) radical and ozone (O^3). Simplified reaction diagrams of free-radical chemistry are:

$$\text{organics} + OH \rightarrow CO_2 + H_2O \text{ (+ acid or salt)}$$

$$\text{organics} + O^3 \rightarrow CO_2 + H_2O \text{ (+ acid or salt).}$$

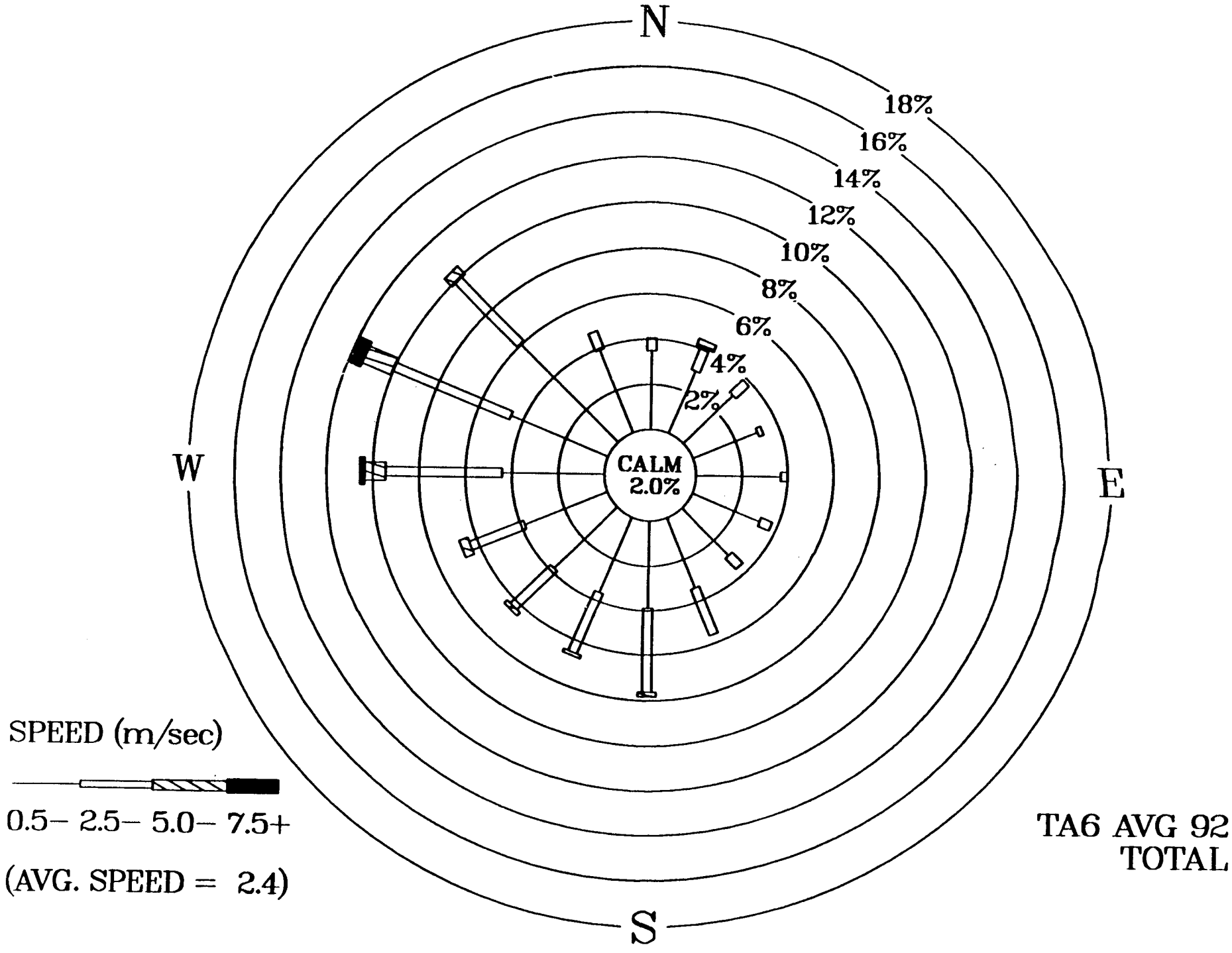
N
E
S
W
18%
16%
14%
12%
10%
8%
6%
4%
2%
CALM
2.0%
SPEED (m/sec)
0.5– 2.5– 5.0– 7.5+
(AVG. SPEED = 2.4)
TA6 AVG 92
TOTAL

John J. Coogan, Ph.D.

2260-B Orange St.
Los Alamos, NM 87544
(505)661-6710

Los Alamos National Laboratory
Chemical and Laser Science Div.
CLS-6 MS E525
Los Alamos, NM 87454
(505)665-0186, 667-6080

Fields of Research

Environmental Remediation Techniques, Discharge Plasmas, Kinetic Modeling, Relativistic Electron Beams, Pulse Power and Flash X-ray Systems, Laser Physics, Spectroscopy.

Education

University of Texas, Dallas, TX	Ph.D. Physics	12/89
University of Texas, Austin and Dallas,TX	M.S. Physics	12/88
University of Texas, Dallas,TX	B.S.,*cum laude* Physics	5/85
University of Dallas, Irving,TX	B.A. Philosophy	5/83

Employment History and Experience

Los Alamos National Laboratory 2/90-present

Staff Member/Physicist. CLS-6 Advanced Laser and Systems Technology. Presently researching applications of pulse power technology to the treatment of mixed and chemical hazardous waste. This includes the use of relativistic electron-beams for aqueous based waste, packed-bed reactors (PBR) for combustible liquids and silent discharge plasmas (SDP) for gaseous based waste. Lead modeling scientist and experimental coordinator for alternative combustion laboratory, PI on research efforts studying mixed waste and off -gas treatment, and on a fundamental study of free radical formation in non-equilibrium plasmas using planar laser induced fluorescence. Mentor for DOE Science and Engineering Research Semester (SERS) and American Chemical Society/LANL SEED students. Member of PBR/SDP team awarded 1992 LANL Distinguished Performance Award.

Postdoctoral Fellow. CLS-7 Pulsed Power Systems. Initiated research program into the ignition and closure of diode plasmas within large area electron beam generators. This work expanded existing perveance models, tested novel emitter materials, designed several unique electron-beam diagnostics and first observed the screening effect in large-area diodes. Programmatic duties for high power KrF lasers for use in Inertial Confined Fusion (ICF) included: developing basic research proposals, optimizing e-beam pumping efficiency, studying vacuum breakdown, and developing and testing composite vacuum/gas barriers. Mentor for DOE SERS student.

University of Texas 5/85-12/89

Research Assistant, Center for Quantum Electronics under Dr. C. B. Collins. Dissertation : "A Flash X-Ray Source Driven by Stacked Blumleins Producing 500 keV Photons" Involved in feasibility study of the gamma-ray laser. Designed, constructed and characterized a flash x-ray source producing high peak powers at >100 Hz repetition rates used to excite nuclear materials, patent is pending. Also collaborated with the Centre National de la Recherche Scientifique (CNRS), France, in a study of the kinetics of high pressure rare gases using both dielectric controlled discharge and pulsed x-ray excitation. Proficient in the methods of UV, VUV and gamma-ray spectroscopy. Extensive experience with high power thyratrons.

Teaching Assistant and Assistant Research Scientist under Dr. J.W. Keto. Instructed physics students in senior laboratory class covering a variety of experimental techniques and supervised their semester long research projects. Assembled and maintained high-power dye laser for use in time resolved spectroscopy of excited rare gases.

Member of the American Physical Society, the Air and Waste Management Association, and ΣΠΣ
References upon request.

PERMIT ATTACHMENT L

WASTE PROFILE INFORMATION

The following wastes may be treated in the PBR/SDP unit. This information has been submitted in accordance with the requirements of HWMR-7, Part V, 40 CFR, § 264.13(a)(1), (2). Waste profile information for these wastes is provided on the following pages. Sample I.D. numbers associated with the wastes on the profile data sheets are listed below:

Waste Description	Hazardous Waste Code(s)
Oil with 1,1,1-Trichloroethane from cleaning and repairing of vacuum pumps.	F001
Lacquer thinner from cleaning road painting equipment.	D001
Mixture of acetone/ethanol from degreasing oily parts.	F003

The duration of a particular experimental run is typically less than 4 hours. The minimum run will be 1 hour; the maximum run will be 8 hours. The quantity of waste treated in a particular experimental run will depend on the duration of the run and the waste feed rate. The proposed rate of waste feed input is 36 to 108 kilograms per day. Therefore, assuming an average input rate of 72 kg/day and an average 250-day work year, the total amount of waste anticipated to be processed in the unit is approximately 18,000 kilograms in a calendar year.

Wastes will be retrieved from permitted LANL storage areas for treatment in the PBR/SDP Unit.

Laboratory Sample ID		L04026-2	L04026-5	L04026-6	L04026-7	L04025-8	L04026-10
Date Received		10/1/92	10/1/92	10/1/92	10/1/92	10/1/92	10/1/92
Date Collected		9/29/92	9/29/92	9/29/92	9/29/92	9/29/92	9/29/92
Your Sample ID		9208	9211	9212	9213	9214	9216
Parameter	Units	Results	Results	Results	Results	Results	Results
Trichlorofluoromethane	% Wt	<0.10	<0.10	<0.10	<0.10	<0.01	<0.01
Methanol	% Wt	<0.30	<0.30	<0.30	<0.30	<0.03	<0.03
Ether	% Wt	<0.10	<0.10	<0.10	<0.10	<0.01	<0.01
1,1,2-Trichloro-1,2,2-trifluoroethane	% Wt	<0.10	<0.10	84.4	<0.10	<0.01	<0.01
Ethanol	% Wt	<0.10	<0.10	<0.10	<0.10	<0.01	<0.01
Acetone	% Wt	<0.10	<0.10	<0.10	<0.10	<0.01	<0.01
Isopropanol	% Wt	<0.10	<0.10	12.	<0.10	<0.01	<0.01
Methylene Chloride	% Wt	<0.10	<0.10	<0.10	<0.10	<0.01	<0.01
Ethyl Acetate	% Wt	<0.10	<0.10	<0.10	<0.10	<0.01	<0.01
1,1,1-Trichloroethane	% Wt	<0.10	<0.10	<0.10	[0-1.5]	<0.01	<0.01
Methyl Ethyl Ketone	% Wt	<0.10	<0.10	<0.10	<0.10	<0.01	<0.01
Carbon Tetrachloride	% Wt	<0.10	<0.10	<0.10	[0-6.1]	<0.01	<0.01
Chloroform	% Wt	<0.10	<0.10	<0.10	<0.10	<0.01	<0.01
Benzene	% Wt	<0.10	<0.10	<0.10	<0.10	<0.01	<0.01
Isobutanol	% Wt	<0.10	<0.10	<0.10	<0.10	<0.01	<0.01
Trichloroethylene	% Wt	<0.10	<0.10	<0.10	<0.10	<0.01	<0.01
N-Butanol	% Wt	<0.10	<0.10	<0.10	<0.10	<0.01	<0.01
Toluene	% Wt	<0.10	<0.10	<0.10	<0.10	<0.01	<0.01
2-Ethoxyethanol	% Wt	<0.10	<0.10	<0.10	<0.10	<0.01	<0.01
Methyl Isobytyl Ketone	% Wt	<0.10	<0.10	<0.10	<0.10	<0.01	<0.01
Tetrachloroethylene	% Wt	<0.10	<0.10	<0.10	<0.10	<0.01	<0.01
Butyl Acetate	% Wt	<0.10	<0.10	<0.10	<0.10	<0.01	<0.01
Chlorobenzene	% Wt	<0.10	<0.10	<0.10	<0.10	<0.01	<0.01
Ethylbenzene	% Wt	<0.10	<0.10	<0.10	<0.10	<0.01	<0.01
Xylenes	% Wt	<0.10	<0.10	<0.10	<0.10	<0.01	<0.01
Styrene	% Wt	<0.10	<0.10	<0.10	<0.10	<0.01	<0.01
2-Ethoxyethanol Acetate	% Wt	<0.10	<0.10	<0.10	<0.10	<0.01	<0.01
Cyclohexanone	% Wt	<0.10	<0.10	<0.10	<0.10	<0.01	<0.01
2-Butoxyethanol	% Wt	<0.10	<0.10	<0.10	<0.10	<0.01	<0.01
Dichlorobenzene	% Wt	<0.10	<0.10	<0.10	<0.10	<0.01	<0.01
Hydrocarbons (as HC)[1]	% Wt	3.9	.43	.74	1.3	<0.01	<0.01
High Boiling Point Organics[4]	% Wt	43.5	.72	.83	0.8	<0.01	<0.01
Hexane	% Wt	<0.10	<0.10	<0.10	<0.10	<0.01	<0.01
Heptane	% Wt	<0.10	<0.10	<0.10	<0.10	<0.01	<0.01

Solvent Screen

Laboratory Sample ID		L04026-2	L04026-5	L04026-6	L04026-7	L04026-8	L04026-1
Date Received		10/1/92	10/1/92	10/1/92	10/1/92	10/1/92	10/1/92
Date Collected		9/23/92	9/29/92	9/29/92	9/29/92	9/29/92	9/29/92
Your Sample ID		9208	9211	9212	9213	9214	9216
Parameter	Units	Results	Results	Results	Results	Results	Results
Trichlorofluoroethane	% Wt	<0.10	<0.10	<0.10	<0.10	<0.01	<0.01
Tetrahydrofuran	% Wt	<0.10	<0.10	<0.10	<0.10	<0.01	<0.01
Isobutyl Acetate	% Wt	<0.10	<0.10	<0.10	<0.10	<0.01	<0.01
n-Propyl Acetate	% Wt	<0.10	<0.10	<0.10	<0.10	<0.01	<0.01
n-Propanol	% Wt	<0.10	<0.10	<0.10	<0.10	<0.01	<0.01
Cellosolve	% Wt	<0.10	<0.10	<0.10	<0.10	<0.01	<0.01
Cellosolve Acetate	% Wt	<0.10	<0.10	<0.10	<0.10	<0.01	<0.01
Butyl Cellosolve	% Wt	<0.10	<0.10	<0.10	<0.10	<0.01	<0.01
Butyl Cellosolve Acetate	% Wt	<0.10	<0.10	<0.10	<0.10	<0.01	<0.01

* Estimated Concentration

Solvent Screen

Laboratory Sample ID		L04025-11	L04025-12	L04025-13			
Date Received		10/1/92	10/1/92	10/1/92			
Date Collected		9/29/92	9/29/92	9/29/92			
Your Sample ID		9217	9218	9219			
Parameter	Units	Results	Results	Results	Results	Results	Results
Trichlorofluoromethane	% Wt	<0.10	<0.10	<0.01			
Methanol	% Wt	<0.30	<0.30	<0.03			
Ether	% Wt	<0.10	<0.10	<0.01			
1,1,2-Trichloro-1,2,2-trifluoroethane	% Wt	<0.10	<0.10	<0.01			
Ethanol	% Wt	<0.10	33.5	<0.01			
Acetone	% Wt	<0.10	19.0	<0.01			
Isopropanol	% Wt	<0.10	.56	<0.01			
Methylene Chloride	% Wt	<0.10	<0.10	<0.01			
Ethyl Acetate	% Wt	<0.10	<0.10	<0.01			
1,1,1-Trichloroethane	% Wt	<0.10	[0-4]	<0.01			
Methyl Ethyl Ketone	% Wt	20.7	<0.10	<0.01			
Carbon Tetrachloride	% Wt	<0.10	[0-15]	<0.01			
Chloroform	% Wt	<0.10	<0.10	<0.01			
Benzene	% Wt	<0.10	<0.10	<0.01			
Isobutanol	% Wt	<0.10	<0.10	<0.01			
Trichloroethylene	% Wt	<0.10	<0.10	<0.01			
N-Butanol	% Wt	<0.10	<0.10	<0.01			
Toluene	% Wt	43.7	<0.10	<0.01			
2-Ethoxyethanol	% Wt	<0.10	<0.10	<0.01			
Methyl Isobutyl Ketone	% Wt	<0.10	<0.10	<0.01			
Tetrachloroethylene	% Wt	0.39	<0.10	<0.01			
Butyl Acetate	% Wt	0.12	<0.10	<0.01			
Chlorobenzene	% Wt	<0.10	<0.10	<0.01			
Ethylbenzene	% Wt	<0.10	<0.10	<0.01			
Xylenes	% Wt	0.37	3.3	<0.01			
Styrene	% Wt	<0.10	<0.10	<0.01			
2-Ethoxyethanol Acetate	% Wt	<0.10	<0.10	<0.01			
Cyclohexanone	% Wt	<0.10	<0.10	<0.01			
2-Butoxyethanol	% Wt	2.3	<0.10	<0.01			
Dichlorobenzene	% Wt	<0.10	<0.10	<0.01			
Hydrocarbons (as HC)[a]	% Wt	14.4	.94	<0.01			
High Boiling Point Organics[a]	% Wt	0.89	.25	<0.01			
Hexane	% Wt	<0.10	<0.10	<0.01			
Heptane	% Wt	<0.10	<0.10	<0.01			

Solvent Screen

Laboratory Sample ID		L04026-11	L04026-12	L04026-13			
Date Received		10/1/92	10/1/92	10/1/92			
Date Collected		9/29/92	9/29/92	9/29/92			
Your Sample ID		9217	9218	9219			
Parameter	Units	Results	Results	Results	Results	Results	Results
Trichlorofluoroethane	% Wt	<0.10	<0.10	<0.01			
Tetrahydrofuran	% Wt	<0.10	<0.10	<0.01			
Isobutyl Acetate	% Wt	<0.10	<0.10	<0.01			
n-Propyl Acetate	% Wt	<0.10	<0.10	<0.01			
n-Propanol	% Wt	<0.10	<0.10	<0.01			
Cellosolve	% Wt	<0.10	<0.10	<0.01			
Cellosolve Acetate	% Wt	<0.10	<0.10	<0.01			
Butyl Cellosolve	% Wt	<0.10	<0.10	<0.01			
Butyl Cellosolve Acetate	% Wt	<0.10	<0.10	<0.01			

*Estimated Concentration

Fingerprint Analysis Report

		Laboratory Sample ID	L04026-1	L04025-1	L04026-2	L04026-3	L04026-4
		Date Received	10/1/92	10/1/92	10/1/92	10/1/92	10/1/92
		Date Collected	9/29/92	9/29/92	9/29/92	9/29/92	9/29/92
		Your Sample ID	9207 Layer 1	9207 Layer 2	9208	9209	9210
Parameter	**Method**	**Units**	**Results**	**Results**	**Results**	**Results**	**Results**
Color	D4979-89	NA	Gold Brown		Brown	Faint Green	Brown
Incidental Odor	D4979-89	NA	None		None	None	None
Physical State	D4979-89	NA	Liquid & Solid		Liquid & Solid	Liquid	Liquid
Layers	D4979-89	NA	Multilayered		Multilayered	Single	Single
Free Liquids	D4979-89	NA	40%		99%	100%	100%
Viscosity	D4979-89	NA	Low	N/A	Medium	Low	Low
Visual Oil & Grease	D4979-89	NA	Negative	Negative	Positive	Negative	Negative
pH	D4980	units	5.79		5.80	13.0	11.0
Cyanide Screen	D5049	NA	Negative		Negative	Negative	Negative
Sulfide Screen	D4978	NA	Negative		Negative	Negative	Negative
Flammability Potential	D4982	NA	Positive		Negative	Negative	Negative
Oxidizer Screen	D4981	NA	Negative		Negative	Negative	Negative
Radiation Screen	CWM 87-36	NA	At Background	At Background	At Background	At Background	At Background
Paint Filter	9095	NA	Fail	Pass	Fail	Fail	Fail
Water Mix Test Results	D5058-90						
Reactivity		NA	Negative	Negative	Negative	Negative	Negative
Temperature Rise		°F	0	0	0	-1	0
Water Solubility		NA	Soluble	Partially	Insoluble	Soluble	Soluble
Heavier and/or Lighter Than Water		NA	N/A	Heavier	Lighter	N/A	N/A
Emulsifies		NA	No	No	No	No	No
Precipitates		NA	No	No	No	No	No

Fingerprint Analysis Report

		Laboratory Sample ID	L04026-5	L04026-3	L04026-6	L04026-7	L04026-7
		Date Received	10/1/92	10/1/92	10/1/92	10/1/92	10/1/92
		Date Collected	9/29/92	9/29/92	9/29/92	9/29/92	9/29/92
		Your Sample ID	9211 Layer 1	9211 Layer 2	9212	9213 Layer 1	9213 Layer 2
Parameter	Method	Units	Results	Results	Results	Results	Results
Color	D4979-89	NA	Tan Brown		Colorless	Tan Brown	
Incidental Odor	D4979-89	NA	None		None	None	
Physical State	D4979-89	NA	Liquid & Solid		Liquid	Liquid & Solid	
Layers	D4979-89	NA	Multilayered		Single	Multilayered	
Free Liquids	D4979-89	NA	99%		100%	99%	
Viscosity	D4979-89	NA	Medium	Low	Low	Medium	Medium
Visual Oil & Grease	D4979-89	NA	Negative	Positive	Negative	Positive	Positive
pH	D4980	units	10.94		8.31	9.83	
Cyanide Screen	D5049	NA	Negative		Negative	Negative	
Sulfide Screen	D4978	NA	Negative		Negative	Negative	
Flammability Potential	D4982	NA	Positive		Positive	Positive	
Oxidizer Screen	D4981	NA	Negative		Negative	Negative	
Radiation Screen	CWM 87-38	NA	At Background	At Background	At Background	At Background	At Background
Paint Filter	9095	NA	Fail	Fail	Fail	Fail	Fail
Water Mix Test Results	D5058-90						
Reactivity		NA	Negative	Negative	Negative	Negative	Negative
Temperature Rise		°F	+1	0	0	0	0
Water Solubility		NA	Partially	Partially	Soluble	Insoluble	Partially
Heavier and/or Lighter Than Water		NA	Lighter	Lighter	N/A	Lighter	Both
Emulsifies		NA	No	No	No	No	No
Precipitates		NA	No	No	No	No	No

Fingerprint Analysis Report

Laboratory Sample ID			L04025-7	L04025-8	L04025-9	L04025-10	L04025-10
Date Received			10/1/92	10/1/92	10/1/92	10/1/92	10/1/92
Date Collected			9/29/92	9/29/92	9/29/92	9/29/92	9/29/92
Your Sample ID			9213 Layer 3	9214	9215	9216 Layer 1	9216 Layer 2
Parameter	**Method**	**Units**	**Results**	**Results**	**Results**	**Results**	**Results**
Color	D4979-89	NA		Blue	Yellow	Green/Tan/ Colorless	
Incidental Odor	D4979-89	NA		None	None	None	
Physical State	D4979-89	NA		Liquid	Liquid	Liquid & Solid	
Layers	D4979-89	NA		Single	Single	Multilayered	
Free Liquids	D4979-89	NA		100%	100%	40%	
Viscosity	D4979-89	NA	Low	Low	Low	Low	N/A
Visual Oil & Grease	D4979-89	NA	Positive	Negative	Negative	Negative	Negative
pH	D4980	units		8.76	2.41	1.75	
Cyanide Screen	D5048	NA		Negative	Negative	Negative	
Sulfide Screen	D4978	NA		Negative	Negative	Negative	
Flammability Potential	D4982	NA		Negative	Negative	Negative	
Oxidizer Screen	D4981	NA		Negative	Negative	Negative	
Radiation Screen	CWM 87-36	NA	At Background	At Background	At Background	At Background	At Background
Paint Filter	9095	NA	Fail	Fail	Fail	Fail	Pass
Water Mix Test Results	D5058-90						
Reactivity		NA	Negative	Negative	Negative	Negative	Negative
Temperature Rise		°F	0	0	.1	0	0
Water Solubility		NA	Partially	Partially	Soluble	Soluble	Insoluble
Heavier and/or Lighter Than Water		NA	Lighter	Lighter	N/A	N/A	Heavier
Emulsifies		NA	No	No	No	No	No
Precipitates		NA	No	No	No	No	No

Fingerprint Analysis Report

		Laboratory Sample ID	L04025-11	L04025-12	L04025-13	L04025-14	L04025-14
		Date Received	10/1/92	10/1/92	10/1/92	10/1/92	10/1/92
		Date Collected	9/29/92	9/29/92	9/29/92	9/29/92	9/29/92
		Your Sample ID	9217	9218	9219	9220 Layer 1	9220 Layer 2
Parameter	Method	Units	Results	Results	Results	Results	Results
Color	D4979-89	NA	Yellow	Orange	Brown/Grey	Purple Blue	
Incidental Odor	D4979-89	NA	None	None	None	None	
Physical State	D4979-89	NA	Liquid & Solid	Liquid & Solid	Liquid & Solid	Liquid & Solid	
Layers	D4979-89	NA	Multilayered	Multilayered	Multilayered	Multilayered	
Free Liquids	D4979-89	NA	99%	99.5	98%	95%	
Viscosity	D4979-89	NA	Low	Low	Low	Low	Low
Visual Oil & Grease	D4979-89	NA	Negative	Positive	Positive	Negative	Negative
pH	D4980	units	5.23	5.46	6.81	9.03	
Cyanide Screen	D5049	NA	Negative	Negative	Negative	Negative	
Sulfide Screen	D4978	NA	Negative	Negative	Negative	Negative	
Flammability Potential	D4982	NA	Positive	Positive	Negative	Negative	
Oxidizer Screen	D4981	NA	Negative	Negative	Negative	Negative	
Radiation Screen	CWM 87-36	NA	At Background	At Background	At Background	At Background	At Background
Paint Filter	9095	NA	Fail	Fail	Fail	Fail	Fail
Water Mix Test Results	D5058-90						
Reactivity		NA	Negative	Positive	Negative	Negative	Negative
Temperature Rise		°F	+1	+5	0	0	0
Water Solubility		NA	Insoluble	Partially	Partially	Soluble	Partially
Heavier and/or Lighter Than Water		NA	Lighter	Lighter	Both	N/A	Heavier
Emulsifies		NA	No	No	No	No	No
Precipitates		NA	No	No	No	No	No

Wet Chemistry

		Laboratory Sample ID	L04026-1	L04026-3	L04026-4	L04026-6	L04026-7
		Date Received	10/1/92	10/1/92	10/1/92	10/1/92	10/1/92
		Date Collected	9/29/92	9/29/92	9/29/92	9/29/92	9/29/92
		Your Sample ID	9207	9209	9210	9211	[illegible]
Parameter	**Method**	**Units**	**Results**	**Results**	**Results**	**Results**	**Results**
Alkalinity	CWM 91-58	%		3.8			
Water (by Karl Fischer)	CWM 91-65	%	98.8	94.2	85.1	Top 3.5 Bottom 98.3	Top 2.1 Bottom 83.2

Wet Chemistry

		Laboratory Sample ID	L04026-8	L04026-9	L04026-10	L04026-11	L04026-12
		Date Received	10/1/92	10/1/92	10/1/92	10/1/92	10/1/92
		Date Collected	9/29/92	9/29/92	9/29/92	9/29/92	9/29/92
		Your Sample ID	9214	9215	9216	9217	9218
Parameter	**Method**	**Units**	**Results**	**Results**	**Results**	**Results**	**Results**
Acidity	CWM 91-68	%		1.4			
Water (by Karl Fischer)	CWM 91-65	%	97.7	96.8		4.8	14.2

Wet Chemistry

		Laboratory Sample ID	L04026-13	L04026-14			
		Date Received	10/1/92	10/1/92			
		Date Collected	9/29/92	9/29/92			
		Your Sample ID	9219	9220			
Parameter	**Method**	**Units**	**Results**	**Results**	**Results**	**Results**	**Results**
Water (by Karl Fischer)	CWM 91-65	%	98.5	92.4			

Metals By EPA Methods

		Laboratory Sample ID	L04026-1	L04026-2	L04026-3	L04026-4	L04026-5	L04026-6
		Date Received	10/1/92	10/1/92	10/1/92	10/1/92	10/1/92	10/1/92
		Date Collected	9/29/92	9/29/92	9/29/92	9/29/92	9/29/92	9/29/92
		Extraction Method	Total	Total	Total	Total	Total	Total
		Your Sample ID	9207	9208	9209	9210	9211	9212
Parameter	Method	Units	Results	Results	Results	Results	Results	Results
Arsenic (As)	6010	mg/kg	<2.25	<2.25	<2.25	<2.25	<2.25	<2.25
Barium (Ba)	6010	mg/kg	<0.250	<0.250	<0.250	<0.250	0.411	<0.250
Cadmium (Cd)	6010	mg/kg	<0.450	<0.450	<0.450	<0.450	<0.450	<0.450
Chromium (Cr)	6010	mg/kg	<0.900	<0.900	<0.900	<0.900	0.904	<0.900
Lead (Pb)	6010	mg/kg	<3.25	162.	<3.25	<3.25	4.01	<3.25
Mercury (Hg)	7471	mg/kg	<0.09	<0.09	<0.09	<0.09	<0.09	<0.09
Selenium (Se)	6010	mg/kg	<3.75	<3.75	<3.75	<3.75	<3.75	<3.75
Silver (Ag)	6010	mg/kg	<1.08	<1.08	<1.08	45.2	<1.08	<1.08
Anions								
Bromide, Total	300.0	%	<0.46	<0.46	<0.46	<0.46	<0.46	<0.40
Chloride, Total	300.0	%	2.20	<0.40	0.406	<0.40	0.40	25.4
Fluoride, Total	300.0	%	<0.084	<0.084	0.377	0.109	<0.084	10.1
Sulfate, Total	300.0	%	<1.10	<1.10	<1.10	3.10	1.21	<0.46

Metals By EPA Methods

		Laboratory Sample ID	L04028-7	L04028-8	L04028-9	L04028-10	L04028-11	L04028-12
		Date Received	10/1/92	10/1/92	10/1/92	10/1/92	10/1/92	10/1/92
		Date Collected	9/29/92	9/29/92	9/29/92	9/29/92	9/29/92	9/29/92
		Extraction Method	Total	Total	Total	Total	Total	Total
		Your Sample ID	9213	9214	9215	9216	9217	9218
Parameter	Method	Units	Results	Results	Results	Results	Results	Results
Arsenic (As)	6010	mg/kg	<2.25	<2.25	<2.25	<2.25	<2.25	<2.25
Barium (Ba)	6010	mg/kg	30.8	<0.250	<0.250	3.99	<0.250	<0.250
Cadmium (Cd)	6010	mg/kg	<0.450	<0.450	<0.450	<0.450	<0.450	<0.450
Chromium (Cr)	6010	mg/kg	<0.900	<0.900	2.91	<0.900	97.5	<0.900
Iron (Fe)	6010	mg/kg			5730.			
Lead (Pb)	6010	mg/kg	28.7	<3.25	<3.25	4.31	460.	<3.25
Mercury (Hg)	7471	mg/kg	<0.09	<0.09	<0.09	<0.09	<0.09	<0.09
Molybdenum (Mo)	6010	mg/kg				3300.		
Selenium (Se)	6010	mg/kg	<3.75	<3.75	<3.75	70.4	<3.75	<3.75
Silver (Ag)	6010	mg/kg	<1.08	<1.08	<1.08	<1.08	<1.08	<1.08
Anions								
Bromide, Total	300.0	%	<0.46	<0.46	<0.46	<0.46	<0.40	<0.40
Chloride, Total	300.0	%	0.890	<0.40	1.16	0.412	2.20	2.43
Fluoride, Total	300.0	%	<0.084	<0.084	<0.084	<0.084	<0.24	<0.24
Sulfate, Total	300.0	%	<1.10	<1.10	<1.10	3.72	0.470	<0.48

Metals By EPA Methods

		Laboratory Sample ID	L04026-13	L04026-14				
		Date Received	10/1/92	10/1/92				
		Date Collected	9/29/92	9/29/92				
		Extraction Method	Total	Total				
		Your Sample ID	9219	9220				
Parameter	Method	Units	Results	Results	Results	Results	Results	Results
Arsenic (As)	6010	mg/kg	< 2.25	< 2.25				
Barium (Ba)	6010	mg/kg	0.298	< 0.250				
Cadmium (Cd)	6010	mg/kg	< 0.450	< 0.450				
Chromium (Cr)	6010	mg/kg	< 0.900	< 0.900				
Lead (Pb)	6010	mg/kg	< 3.25	174.				
Mercury (Hg)	7471	mg/kg	< 0.09	0.66				
Selenium (Se)	6010	mg/kg	< 3.75	< 3.75				
Silver (Ag)	6010	mg/kg	< 1.08	< 1.08				
Anions								
Bromide, Total	300.0	%	< 0.46	< 0.40				
Chloride, Total	300.0	%	< 0.40	1.06				
Fluoride, Total	300.0	%	< 0.084	< 0.024				
Sulfate, Total	300.0	%	< 1.10	0.504				

		Laboratory Sample ID	L04025-2	L04025-5	L04025-7	L04025-8	L04025-13
		Date Received	10/1/92	10/1/92	10/1/92	10/1/92	10/1/92
		Date Collected	9/29/92	9/29/92	9/29/92	9/29/92	9/29/92
		Your Sample ID	9208	9211	9213	9214	9219
Parameter	Method	Units	Results	Results	Results	Results	Results
Individual Determination							
Oil & Grease	413.2	mg/L				708.	2800.
Oil & Grease	413.2	%	100.	12.9	100.		

FIGURE 2. EMERGENCY FACILITIES

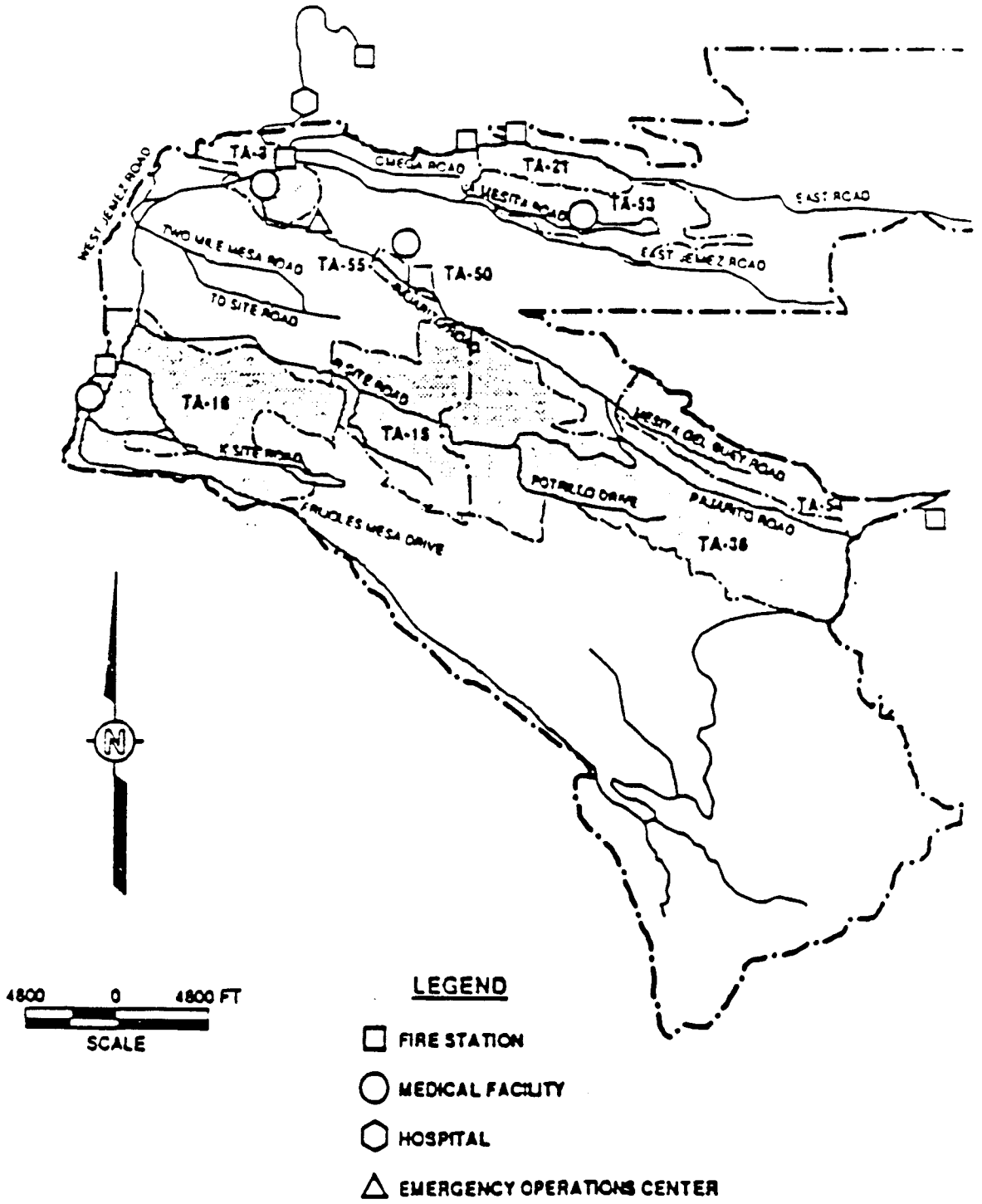

PERMIT ATTACHMENT M

FIGURES

LIST OF FIGURES

		Page
Figure 1	Site Map	F1
Figure 2	RD&D Unit Key Map	F2
Figure 3	Location Map	F3
Figure 4	Layout of Building 128	F4
Figure 5	Topographic Map	F5
Figure 6	Location of RD&D Units Relative to Nearby Fault Traces	F6
Figure 7	Packed-Bed Reactor	F7
Figure 8	Cross-section of Silent Discharge Plasma Unit	F8
Figure 9	Packed-Bed Reactor/Silent Discharge Plasma RD&D Unit: Open-Loop Configuration	F9
Figure 10	Packed-Bed Reactor/Silent Discharge Plasma RD&D Unit: Closed-Loop Configuration	F10

RD&D UNIT KEY MAP

Figure 2

5167-B

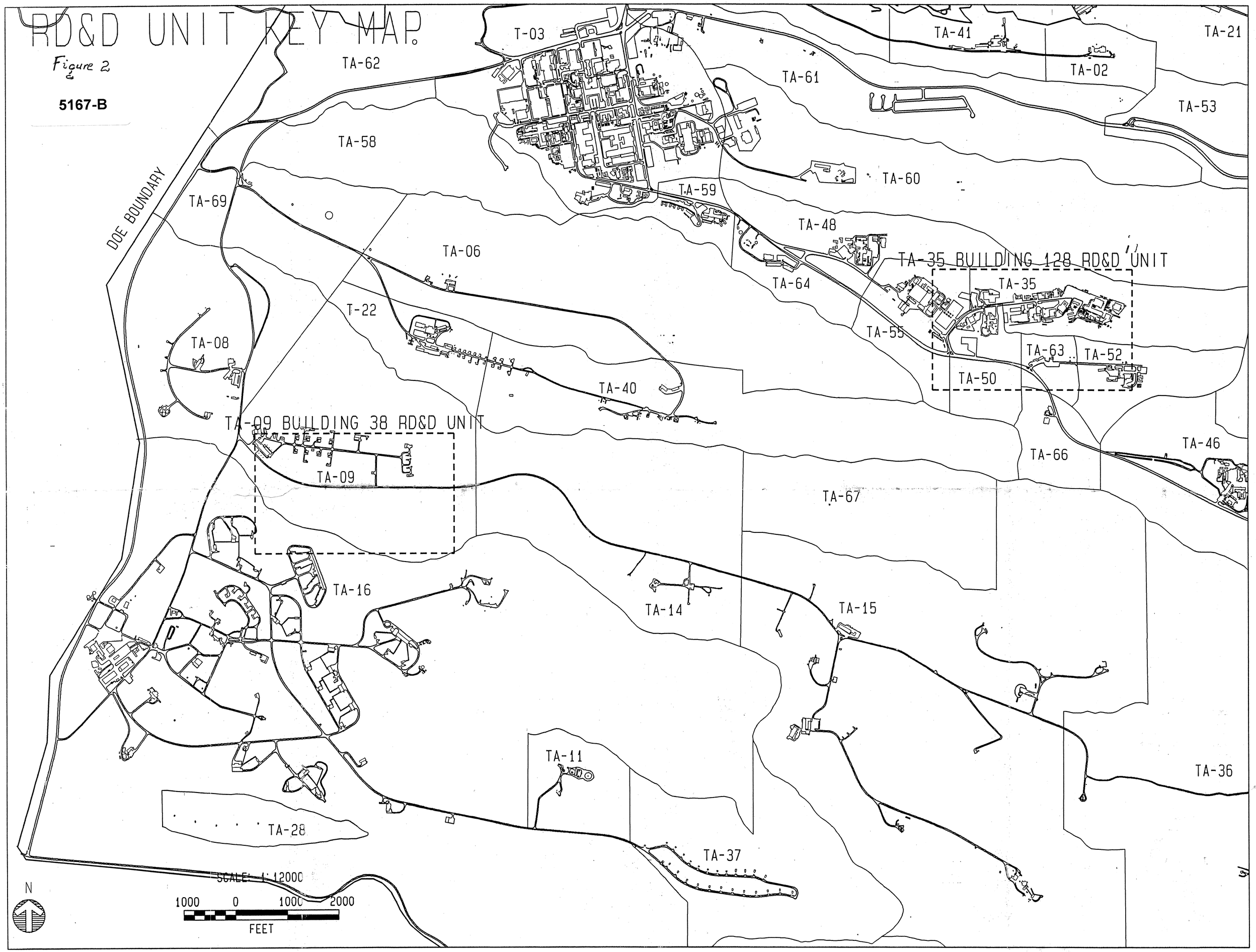

TA-35, Building 128 with 1000 Foot Radius

Figure 5

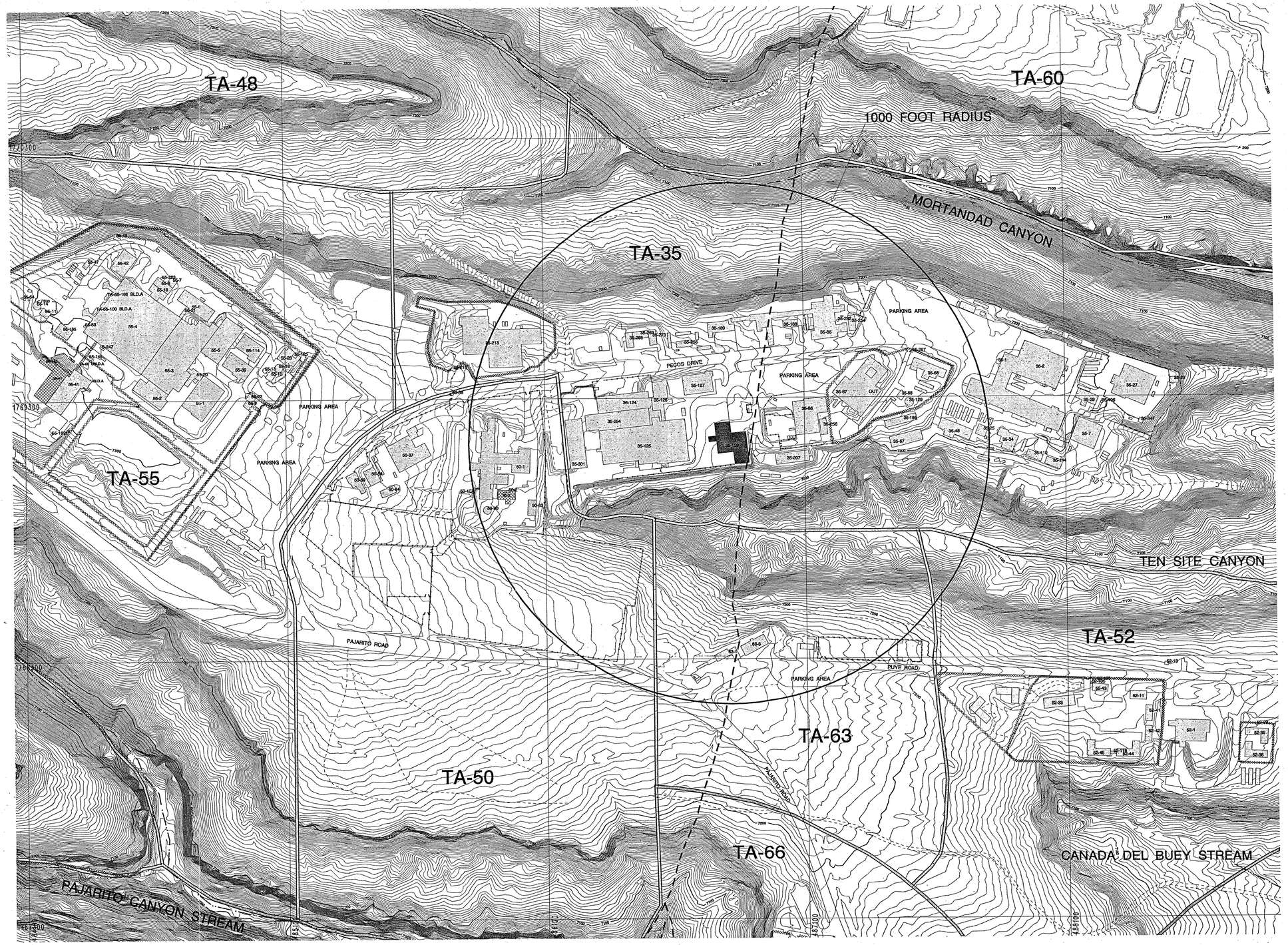

LEGEND

- Boundary, TA
- Contours, 2 foot
- Contours, 10 foot
- Contours, 100 foot
- Fault, Projected
- Fence, Industrial
- Fence, Security
- Roads, Dirt
- Roads, Paved
- Road/Trail
- Stream, Intermittent
- Permanent Structure
- Temporary Structure
- Underground Structure
- Structure 35-128

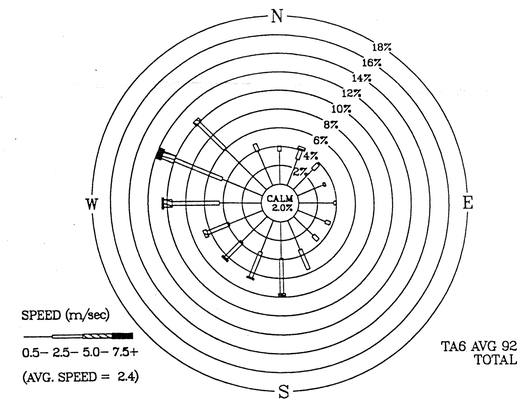

5167-A

State Plane Coordinate System, New Mexico Central Zone.
1927 North American Datum

Grid provides New Mexico State Plane coordinates in feet.
Grid interval, in feet: 1000
Feet per inch on map = 200

SCALE 1:2400

Notice: The information on this map is provisional and has not been checked for accuracy. Maps should not be relied upon to establish legal claims, boundary lines or locations of improvements.

Basemap Sources: Utility and structure data are from Los Alamos National Laboratory Engineering Division and Los Alamos County Utility and Engineering Departments. Contour data is from Los Alamos National Laboratory Environmental Restoration Program aerial survey, September, 1991.

University of California
Los Alamos National Laboratory
Earth & Environmental Sciences Division

FIMAD Facility for Information Management, Analysis and Display. FIMAD is the electronic data repository for the Environmental Restoration Program at Los Alamos National Laboratory.

Produced by: Doug Walther
Date: September 29, 1993 FIMAD Plot ID: G101474