Department of Energy
Field Office, Albuquerque
Los Alamos Area Office
Los Alamos, New Mexico 87544

OFFICE OF THE SECRETARY

ENTERED

LIBRARY COPY

William K. Honker, Chief
RCRA Permits Branch
U. S. Environmental Protection Agency
Region 6
1445 Ross Ave., Suite 1200
Dallas, Texas 75202-2733

RE: Response to Notice of Deficiency (NOD) for OU 1140 RCRA Facility Investigation (RFI) Work Plan

Dear Mr. Honker:

Enclosed is the response to the NOD for the OU 1140 RFI Work Plan which was submitted to your office on August 19, 1993. Environmental Protection Agency (EPA) NOD comments were received at the Los Alamos Area Office on July 21, 1994.

Should you have any questions or concerns, please call me at (505) 665-7203, or Ken Schenck, Scientech, at (505) 665-7217.

Sincerely,

Theodore J. Taylor
Program Manager
Environmental Restoration Program

LAAMEP:2TT-011

Enclosure

cc:
See page 2

2551

CERTIFICATION

I certify under penalty of law that these documents and all attachments were prepared under my direction or supervision in accordance with a system designed to assure that qualified personnel properly gather and evaluate the information submitted. Based on my inquiry of the person or persons who manage the system, or those persons directly responsible for gathering the information, the information submitted is, to the best of my knowledge and belief, true, accurate, and complete. I am aware that there are significant penalties for submitting false information, including the possibility of fine and imprisonment for knowing violation.

Document Title:

Response to NOD for RFI Work Plan for OU 1140

Name: _____ Date: August 18, 1994

Dennis Erickson
Division Director
Los Alamos National Laboratory

Name: _____ Date: 8/19/94

Joseph Vozella, Chief
Environment, Safety, and Health Branch
DOE-Los Alamos Area Office

RESPONSE TO THE EPA NOTICE OF DEFICIENCY
OPERABLE UNIT 1140 RCRA FACILITY INVESTIGATION WORK PLAN
LOS ALAMOS NATIONAL LABORATORY
AUGUST 1994

General Comments:

1. All work plans submitted should be third-party executable. This work plan could not be carried out by a third-party. The following information should be included in any work plan:

Response

The OU 1140 Team believes that the work plan is third-party executable and that much of the information listed as missing in General Comment No. 1 is included in the work plan. Based on the work plan, LANL has developed a field planning report that outlines the fieldwork necessary to execute the work plan, the fieldwork priorities, and a related multi-year schedule. This field planning report will be reviewed regularly and updated. Also, from this field planning report and the work plan, annual field implementation plans to detail annual sampling campaigns will be developed. The OU 1140 field implementation plan for summer and fall 1994 is currently being drafted. In addition, field implementation plans will reflect comments from EPA and other parties on the original work plan, phase reports, Phase II work plans and VCA plans.

A. Background description of the SWMU with all sampling information.

Response

Background descriptions of all SWMUs have been provided in Chapter 5 of the work plan. Past sampling information has been included. Chapter 5 includes six subsections, one for each PRS aggregate. The first part of each subsection presents SWMU backgrounds, including descriptions and histories, and information on known nature and extent of contamination.

B. Information about the unit from the visual site inspection (staining, debris, current status of unit) prior to writing the work plan.

Response

The first subsection of each of the six Chapter 5 subsections presents information about the unit obtained from visual inspection (e.g., current status of the unit, staining, and presence of debris).

C. A list of laboratory analysis by constituent to be conducted for each unit if it is the same.

Response

LANL agrees that a list of laboratory analyses for each unit (groups of units if appropriate, or broken down by groups of individual samples within units in many cases) is an essential component of the work plan. The sampling and analysis tables included in each subsection of Chapter 5 (such as Table 5-1-7) serve this purpose.

(Revised versions of these tables are found in the Errata for the draft OU 1140 Work Plan, dated May 1994, which are attached.) However, because most of the proposed analyses are to be performed by broad-spectrum methods (the exceptions are individual analyses for certain radionuclides, asbestos, and mercury), these tables indicate only the analytical suites to be performed. Target analyte lists corresponding to these suites have now been finalized (after a process that included consultations with Region 6 and New Mexico state regulators) and are also attached.

Please also see the response to specific Comment No. 5, below.

D. Numbers of samples to be analyzed as indicated in the Analytical Tables and text should match.

Response

After the work plan was submitted to EPA, LANL realized that some information in the text did not match information in the sampling and analysis tables. Based on this realization, LANL reviewed the text and tables to identify discrepancies and prepared OU 1140 errata. A copy of these errata are also attached.

E. More information should be provided on actual sample collection. For example: A sample of the surface soil will be collected at 0-6 inches by the spade and scoop method (LANL-ER-SOP-06.09) at the location of the highest field screening reading (using field screening methods...) or areas of staining. Based on the on-site inspection five areas of staining were noted, the most prominent three will be sampled. If staining continues below 6 in., then an additional sample will be collected at 18 in. and every foot below that until the bottom of the contamination has been reached.

Response

The fourth subsection of each of the six Chapter 5 subsections presents our sampling plan for each aggregate. Methods are described and SOPs are cited. Details are provided in Appendix D, Field Investigation Approach and Methods, and in our field implementation plans, which present more information on sampling, sample management, chain-of-custody, quality assurance, contamination control and decontamination, logistics, scheduling, etc. In addition, detailed waste management, decontamination, and health and safety plans have been prepared since the work plan was submitted to EPA.

2. For units which had more than one component such as SWMU 46-003(f) with a septic tank, surface sampling and outfall, the work plan would be much better if all this information was included in one sampling plan. As presented in the work plan the following problems were noted with the information presented on SWMU 46-003(f): Figure 5-1-12 shows borehole samples to be taken for the septic tank portion of the unit. Figure 5-3-8 shows surface soil samples for the same unit; however, none of the sampling from Figure 5-1-12 is indicated on Figure 5-3-8. The reader must go back and forth between descriptions of the unit which has to be repeated several times and the proposed sampling (which is vague). In addition, the third component which is the

outfall FF does not appear to be related to the actual SWMU 46-003 (f) in any manner. Outfall FF appears to be off a drainage ditch which is closely located to the SWMU yet may not receive any waste from the unit. It would greatly improve the quality of the work plan to have the background and description of the SWMU followed by all the sampling to be associated with the unit. This would reduce redundancy and make it much easier for the reader to follow proposed sampling. Not to mention the paper and time on additional figures and text that would have been saved.

Response

LANL is well aware of the complexity introduced by the interrelated and (in some cases) interconnected SWMUs. We considered numerous ways of organizing the work plan; all had advantages and disadvantages, including the aggregate divisions we chose. Note that the sample database captures the complexity of the Operable Unit and the relationships between SWMUs (see Appendix E).

3. Numbers of samples in analytical tables do not match text. All tables should be revised to indicate the number of samples undergoing laboratory analysis.

Response

This problem was corrected in the OU 1140 errata. Please see response to Comment No. 1D.

4. No Further Action requests: LANL may request the following units be removed from the permit by a class 3 permit modification.

46-004 (a)
46-008 (b)

Additional units discussed in Chapter 6 which are not currently in the permit do not need to be added. It should not be construed by LANL that approval for not adding SWMU 46-008 (misc) to the permit is approval of any actions for SWMUs 46-008 (a-g).

Response

Our interpretation of the comment is that LANL may request the following PRSs included in the 1995 Class 3 permit modification as requiring no further action (NFA):

46-004(a)

46-008(c)

The following PRSs are not on the permit and will not be added to the permit:

46-001	46-004(i)	46-004(j)
46-004(k)	46-004(l)	46-004(n)
46-004(o)	46-006(e)	46-008(misc.)
46-0010(a)	46-0010(b)	46-0010(c)
46-0010(e)	46-0010(f)	46-0010(misc.)

We agree that not adding 46-008(misc.) to the permit does not affect actions proposed for SWMUs 46-008(a-g).

Specific Comments:

1. **Figure ES-1, p. ES-6 -** The time frame for the submittal of the final RFI reports is not acceptable. LANL shall provide schedules for Phase I sampling by SWMU. Baseline schedules as provided are not acceptable, and LANL shall supply specific final RFI report dates for each SWMU, groups of SWMUs or SWMU aggregate. EPA recently sent LANL a letter dated June 27, 1994 on this issue for which a response is due to EPA on August 5, 1994. The response to this deficiency may be incorporated in the August 5 submittal.

Response

LANL's response will be included in LANL's response to EPA's letter dated June 27, 1994, on this issue. The response is currently being developed by the LANL ER project office.

2. **1.3 Description of OU 1140, p. 1-8, last sentence -** EPA approval of this workplan does not have the effect of delisting from the Laboratory permit all SWMUs proposed for no further action (NFA) in Chapter 6. LANL should note that if a SWMU is listed in the permit for investigation, that unit may only be removed from the permit following the completion of a class 3 permit modification, and agreement by EPA.

Response

LANL concurs.

3. **3.5.2.3 Perched Aquifers and 3.5.2.4 Main Aquifer, p. 3/12 -** Text indicates that perched aquifers may be produced in the Cerros Del Rio basalts or within the Puye formation. Text indicates that the main aquifer is located in the same location as the perched aquifers. LANL shall clarify text concerning location of each aquifer.

Response

The potential perched aquifers and the main aquifer may occur within the same formations, but obviously not at the same location. In the vicinity of OU 1140, the Puye Conglomerate and the Cerros del Rio basalts probably interfinger with a vertical extent close to 1,000 ft, as shown in Figure 3-4. There is plenty of room for thin, perched aquifers to exist within these formations, but above the main aquifer water table. It should be stressed that there is no direct evidence for the existence of perched aquifers below OU 1140.

4. 4.2 Site Characterization Decision Model, p. 4-4 paragraph four - The primary goal of the RFI should be to determine if a release of hazardous waste or hazardous constituents has occurred and to then define the extent of that release. (If hazardous constituents are found at levels above background but below screening action levels, additional sampling may be required to define the extent of contamination.)

The site should not automatically be recommended for no further action (NFA). LANL should submit sampling results from Phase I sampling in the RFI report, and EPA will determine if additional sampling is required independent of exceedences of the SALs. This applies to all data quality objectives for this work plan.

Response

Bases for using RFI data to evaluate the need for corrective action at PRSs were negotiated among DOE, EPA Region 6, and NMED and set forth in the document "Technical Assumptions for Data Collection and Evaluation" (October 19, 1993, attached). Data quality objectives in the OU 1140 RFI Work Plan are broadly in agreement with the principles in the October 14, 1993, document referenced above, although this work plan was submitted in May 1993. In particular, given the almost complete lack of existing data for OU 1140 PRSs, all of the work proposed in the work plan is intended to address what the Technical Assumptions document calls the "site screening decision."

As stated in the Technical Assumptions document, Screening Action Levels (SAL) will generally be used "to identify contaminants of concern for surface exposure and determine the need for further study" (Item 4 of the Technical Assumptions document). However, there are a number of exceptions, including deep subsurface contamination (Item 5), cases where SALs computed by Subpart S methods are below natural background levels (Item 8), and instances where multiple contaminants are observed (Item 9). Thus, no site will automatically be recommended for NFA based on failure to observe levels above SALs and, in some instances, additional sampling may be proposed in such cases. In general, however, LANL expects to propose NFA for sites where observed levels do not exceed SALs because risks to human health and the environment associated with such sites are expected to be very small.

LANL recognizes, as stated in the Introduction to the Technical Assumptions document, that regulators have the final decision authority in all cases. The RFI report

will include all Phase I sampling results so that EPA can make independent evaluations.

5. 4.3.1 Potential Contaminants of Concern, p. 4-11 - LANL may not reduce their analysis as indicated in Table 4-2 until preliminary phase I analytical data has been evaluated by EPA. LANL must use EPA approved methods listed under SW 846 for VOCs, SVOCs, metals and pesticides. This applies to all portions of the work plan. LANL shall revise their text accordingly, and provide a revised table indicating all constituents for which analysis will be conducted.

Response

As explained in the response to general Comment No. 1c, standard target analyte lists are associated with each of the suites listed in the sampling and analysis tables of Chapter 5, and results for each analyte on the associated list will be obtained whenever that suite is requested. Table 4-2 provides information about the analytes identified as the most likely to be found at OU 1140 PRSs. Analytes most likely to be found will be the primary focus of data validation efforts, but other results will be obtained and the information needed for data validation for other analytes will be available.

Laboratory analyses for the ER Project will be performed by internal and commercial laboratories under contract to LANL's environmental chemistry group. These contracts specify lists of target compounds and quality control requirements (including estimated quantitation limits), but permit the analytical laboratory to select specific methods to meet the quality control requirements. For the broad-spectrum suites called for by the OU 1140 Work Plan, the methods that meet these requirements are SW-846 methods or comparable Contract Laboratory Program methods. Thus, we expect our results to be entirely equivalent to those produced by the standard SW-846 methods.

6. 4.3.3 Potential Human Receptors, p. 4-14 - Until future land use scenarios are agreed upon then a residential scenario shall be used for a baseline risk assessment when a decision of no further action is requested. LANL shall revise text. This applies to all sections of the work plan where risk assessment is used or proposed.

Response

We concur with your comment. Until future land use scenarios are agreed upon, the residential land use scenario will be used for all baseline risk assessments when a decision of no further action is requested.

7. 4.3.3.2 Potential Human Exposure, p. 4-17 - If measured concentrations of contaminants are found to be above background (no relation to SALs) then LANL shall be required to determine the extent of the contamination. LANL shall revise text accordingly.

Response

See response to specific Comment No. 4

8. 4.3.3.2.1 Continued Laboratory Operations, p. 4-18, second paragraph - EPA considers surface contamination to include the top two feet of soil rather than the top six inches of soil as indicated in text.

Response

Under the Laboratory's ER Program, surface soil samples generally include the top 6 in., although some surface samples may be obtained from a depth as great as 24 in. In assessing risk from incidental soil ingestion, dermal contact, and particulate inhalation, it is preferable to use soil samples taken from shallow depths (the top several inches) because receptors are most likely to be exposed to such near-surface soil. The only situation in which we would classify soil sampling data collected from depths of 6 in. to 24 in. as surface samples would be when contaminant concentrations were higher at greater depths than at shallow depths; this approach would yield the most conservative exposure estimates.

At OU 1140 our understanding of historical operations led us to conclude that contamination is most likely to exist at shallower depths. Consequently, for us to consider samples collected at depths of 6 to 24 in. as surface samples would only lower the mean contaminant concentrations in surface soils, resulting in a less conservative estimate of risk.

9. 4.5.1 Sampling Strategies, p. 4-23 -

a. LANL may not use average values rather than maximum to drive the decision where voluntary corrective actions are anticipated. VCA's work plans should be approved by EPA prior to implementation, as EPA approval is required for cleanup levels and confirmation sampling. LANL should revise text accordingly.

Response

LANL does not plan to use average values to decide whether to proceed with a VCA. Rather, we propose using average values after the VCA is complete in order to show that risks posed by any remaining contamination is within acceptable limits. We also fully understand and acknowledge EPA's need to review and approve a VCA work plan before the VCA is conducted.

b. LANL's use of error tolerances has not been approved by EPA. There seems to be no consistency in how this method is used by the lab in any of the RFI work plans reviewed to date. EPA continues to evaluate the proposed sampling plans for each SWMU based on the adequacy of the sampling proposed, and may recommend additional samples be collected.

Response

The OU 1140 RFI team developed statistical methods with the guidance of a technical statistician and believe them to be sound. LANL's ER program also utilizes a review process to promote consistency whenever possible. We assume that your concerns on error tolerances are reflected below in your specific NOD comments on the work plan Chapter 5 sampling and analysis plans.

10. 4.5.3 Analytical Methods, p, 4-30 -

a. LANL shall use SW846 methods for all laboratory analysis of metals, semi-volatiles, volatiles and pesticides. LANL shall revise text accordingly.

Response

See response to specific Comment No. 5

b. paragraph five - Any PRS specific list of analytes should be included in the RFI work plan and not determined at a later date. This information is an important part of the sampling plans, and should have been taken into account already. See comment no. 5. LANL shall revise text accordingly.

Response

LANL agrees. As stated in the response to general Comment No. 1c, the OU 1140 RFI Work Plan specified only analytical suites in its tables. The associated target compound lists, as finalized in contracts with the laboratories providing analytical services to the ER Project, are attached. PRS-specific PCOCs, which are a subset of the analytical suites, are listed in the first table within each of the Chapter 5 aggregate sections.

c. Section 7 of Appendix D indicates that LANL is using a reduced list of metals for analysis: beryllium, cadmium, lead, chromium and silver. EPA will evaluate the process at each unit and determine if this list needs to be expanded.

Response

As stated in the response to specific Comment No. 5, results for all metals in the inorganic target analyte list (SW-846) will be obtained whenever this suite is requested.

11. 5.1.1.1 Description and History, p. 5-7 -

a. LANL shall provide a description of the size of each septic tank.

Response

Information on tank size is only available for one of the seven septic systems [i.e., SWMU 46-003(g)]. This is the only active septic system. The tank capacity is 1,000 gal.

b. LANL does not indicate when several units stopped receiving wastes. Some units may have received RCRA listed hazardous waste after November 19, 1980, and therefore, may be considered regulated units. The following units may be RCRA units and therefore subject to RCRA closure: 46-003 (g), and 46-004 (c-e and p). LANL shall provide adequate information for a determination to be made as to the status of these units.

Response

The units listed above are active systems. SWMU 46-003(g) is a septic system that was not installed for the disposal of RCRA waste generated by laboratory operations. The dry wells [SWMUs 46-004(c-e and p)] received chemical wastes in the past, but institutional controls were in place in 1980 to prevent the discharge of RCRA wastes into septic and dry well systems. LANL has no knowledge that RCRA wastes were disposed at these units after November 19, 1980.

12. 5.1.2 Remediation Decisions and Investigation Objectives, and 5.1.3 Data Needs and Data Quality Objectives, pp. 5/17-5/29 -

a. EPA does not agree and will not approve the majority of assumptions made in this section. The entire write-up is extremely confusing. Should LANL propose a voluntary corrective action (VCA) at one of these SWMUs then LANL should present a work plan which includes cleanup levels and confirmation sampling with a diagram of all samples to be collected. The format should be agreed upon by EPA and LANL. In the future LANL should exclude such long discussions of their data quality objectives from the work plan and include detailed discussions of what actual sampling and work is to be conducted at each unit.

Response

Sampling issues associated with septic systems and dry wells are addressed in responses to specific EPA comments listed below.

VCAs will be conducted following an EPA-approved VCA protocol. VCA work plans, based on an approved protocol, will be submitted to EPA for review and approval. These plans will include cleanup levels and confirmation sampling. The format will be agreed upon by EPA and LANL.

b. LANL needs to provide Figure 5-1-6 mentioned on page 5-29.

Response

As a result of a document-reproduction error, some copies of the OU 1140 work plan did not include Figure 5-1-6; we apologize. A copy of this figure is attached.

13. 5.1.4 Phase Sampling and Analysis Plan, p. 5-29 - EPA does not approve the list of analytes presented. Descriptions of these units allow for multiple contaminants therefore LANL shall analyze for metals (all), semivolatiles, volatiles and PCBs, using SW846 metals for all.

Response

The text only lists examples of potential contaminants of concern (PCOCs); a complete list of analytes is in Table 5-1-7. The analytes listed are based on the histories of the PRSs and past operations within the buildings that discharged to the systems (i.e., identified PCOCs). Also, see responses to general Comment No. 1c and specific Comment No. 5.

14. 5.1.4.1.1 Septic Tank, Distribution Box, and Dry Well - Preliminary Screening, p. 5-47, second paragraph -

a. LANL shall collect a sample from within each septic tank or distribution box as possible. LANL may not homogenize five feet of core for one sample. If sampling within the septic tank, dry well or distribution tank is not possible, LANL shall take a 6-inch sample beneath the inflow pipes to the tank, dry well or distribution tank. In addition, at least one sample should be collected from underneath the septic tank.

Response

As stated in the work plan and shown on the sample location maps, we intend to collect a sample from within each septic tank and distribution box whenever possible. In response to EPA's request, we have modified our sampling plan to eliminate core homogenization. Instead of homogenizing, we will collect samples for all PCOCs using a method analogous to that described for VOCs at the top of p. 5-47. We will use appropriate field-screening techniques, hydrologic observations, and/or geologic observations to select a sample most likely to show contamination. If no indicators appear, we will sample the midpoint of each 5-ft run. Our plan already includes sampling beneath septic tanks.

b. Text on page 5-47 indicates that LANL will be collecting one sample for every five feet of core up to probably 15 feet of core. Therefore there should be a maximum of 3 samples for each borehole. The number of samples being analyzed for each SWMU does not correlate with the number of samples undergoing analysis in Table 5-1-7. LANL shall clarify the number of samples being collected and undergoing laboratory analysis.

Response

The text on page 5-47 is correct (i.e., LANL will be collecting one sample for every five feet of core). With one exception (SWMU 46-003-f), the figures agree with Table 5-1-7. For example, at SWMU 46-003-b, the text (p. 5-50) mentions four boreholes: one through the septic tank, one through the distribution box, and two in the drainfield. These locations are shown on Figure 5-1-8 and listed in Table 5-1-7 as follows: line 6, 3 "structure" samples from 15-ft borehole through septic tank; line 7, 3 "structure" samples from 15-ft borehole through distribution box; line 8, 6 "subsurface" samples from two 15-ft boreholes in the drain field. Table 5-1-7 does contain one error. In line 22, there will be 9 (not 6) samples collected from 3 boreholes in the sand filter for SWMU 46-003(f).

c. LANL shall clarify where the septic system boreholes will be collected. Are these boreholes located around the septic system?

Response

The locations for each borehole are shown on the sample location maps, Figures 5-1-7 to 5-1-16. An enlarged diagram of the typical borehole placement is shown in Figure 5-1-6, which was accidentally omitted from the EPA copy of the work plan (see response to Comment No. 12.b).

15 5.2.1.1 Description and History, p. 5-54 - These lagoons (SWMU 46-002 and 46-005) may have received RCRA listed wastes after July 1982, and therefore, may be RCRA regulated units subject to closure requirements. LANL shall provide information clarifying this issue.

Response

The SWMU 46-002 lagoon was constructed to receive sanitary waste, not RCRA waste.
In addition, institutional controls were in place in 1982 to prevent the discharge of RCRA wastes into drain lines that convey to the lagoon. LANL has no indication that this unit received RCRA hazardous waste after July 1982.

The SWMU 46-005 impoundments were used to hold salt brine from 1980 to 1987. During 1987 the impoundments were drained of the brine, and the sanitary waste lines from TA-46-158 were connected to the impoundments. The impoundments are also used as backup units to dispose of certain non-hazardous industrial wastewaters (e.g., cooling tower discharges from steam plants). The impoundments have never been used to dispose of hazardous/RCRA wastes. LANL has no knowledge of RCRA hazardous waste being disposed in these units after July 1982.

16. 5.1.4.1.2 Drain Field Sampling - Preliminary Screening, p. 5-48 - LANL shall collect a sample adjacent to the end of each drain line, and an additional sample 5 feet below that. These samples should be analyzed for Appendix VI constituents. Several boreholes should be collected for each leachfield with a minimum of four samples being sent for laboratory analysis.

Response

We have presented our rationale for collecting samples at the proximal (rather than distal) end of each drain line on p. 5-29, and stand by that argument. It is possible, even likely, that if a drain field was slightly over-engineered or became plugged over time, effluent might never have reached the end of the lines, and samples collected there might miss significant contamination. All boreholes into drain fields will extend 5 ft into consolidated tuff (p. 5-47), and will therefore penetrate at least 5 ft beneath the drain line. Samples will be analyzed for appropriate PCOCs as detailed in Table 5-1-7. Table 5-1-7 also shows that at least 6 samples from each drain field will be submitted for laboratory analysis (unless particularly shallow tuff is encountered, in which case at least 4 samples will be analyzed).

17. 5.2.4.2 PRS Sampling Summaries, p. 5-65 This entire sampling section needs to be rewritten. <u>Too much</u> emphasis is being placed on the DQOs and not on actual work being done (sampling plans). At a minimum the following information should be provided:

a. LANL shall provide the depth of sampling for all samples to be collected. This information is not in the work plan.

Response

All samples are described in the text and figures as either surface soil (S) samples, sludge/sediment (SS) samples, or shallow-angle borehole (SAB) samples. Detailed descriptions of the depths and methods of collection for these samples are presented in Appendix D, pp. D-13 to D-16. Surface soil samples are 12-in. deep when VOC analysis is planned, otherwise 6-in. deep. The depth of sludge/sediment samples will depend on field circumstances (e.g., the configuration of an impoundment, sump or drainage channel).

b. LANL shall provide a figure which illustrates the cross section of the sand filters for SWMU 46-002 and the entire SWMU 46-005.

Response

A figure that illustrates the cross sections of the sand filters for SWMU 46-002 is attached. Engineering drawings for SWMU 46-005 could not be located, and therefore, a cross section figure could not be developed.

c. Text in the second paragraph indicates that three samples from near the center surface of each compartment of the sand filter will be collected; however, Figure 5-2-4 only shows one sample per filter compartment as does Table 5-2-5.

Response

Text wording was unfortunately ambiguous. We should have said "collect three samples, one from near the center of each compartment..." Therefore, Figure 5-2-4 and Table 5-2-5 are correct. Only one sample from each compartment will be analyzed.

d. What are the square structures off the southeast corner of the Sewage lagoon and sand filter, S-78? Why are these structures not being sampled?

Response

The square structure at the southeast corner of the lagoon is a concrete valve box, used to control effluent flow to the sand filters and to Outfall JJ. The square structure south of the sand filters is a concrete gauging weir, used to measure and record effluent flow to Outfall II. In both cases, the structures are empty and are not a sediment or sludge accumulation site. The sources (lagoon and sand filters) are being sampled, and sediments beneath Outfalls II and JJ are being sampled (see Figure 5-4-11).

e. Is LANL collecting a sample every five feet along the borehole cored under 46-002?

Response

Yes, see Section 5.2.4.2, page 5-71.

f. A list of hazardous constituents for which laboratory analysis is being conducted should be provided.

Response

Analytes are listed by category in Table 5-2-5, and analysis methods are described in Section 7 of Appendix D, pp. D-23 to D-24. See also our response to general Comment No. 1c and specific Comment No. 5.

g. **Table 5-2-5 -** See general comment no. 3.

Response

The table agrees with Figures 5-2-4 and 5-2-6. A text reference to the sludge sample collected from the siphon box at PRS 46-002 (SS-11) was inadvertently omitted.

h. **Table 5-2-5 -** Why are samples from the lagoon system (46-002) not being analyzed for VOAs? Why are the samples from the soil/tuff interface for the solar ponds (46-005) not being analyzed for VOAs and mercury? LANL shall provide an explanation.

Response

Selected samples from SWMU 46-002 are being analyzed for VOCs, as shown in Table 5-2-5. Table 5-2-5 also shows that sludge samples from SWMU 46-005 are being analyzed for VOCs. There is no reason to suspect mercury contamination at SWMU 46-005, based on our knowledge of the processes associated with the SWMU.

18. 5.3.4.1 Sampling, p. 5-94 -

a. It is not appropriate to use the analytical results from the outfall aggregate surface investigation to determine the analysis for the surface release. Outfalls may be located over 100 feet away from the actual surface source of the contamination. Contaminants do not migrate at the same rates and dilution may occur prior to the points of outfall sampling being reached. The location of outfall should be noted on each figure. This applies to all units discussed in this section.

Response

As stated in work plan Section 5.3.4.1, page 5-95, any visible staining in a surface SWMU is being sampled. Outfall samples will be used to evaluate possible releases from a surface SWMU not evidenced by a stain (see DQO step 5, page 5-91).The Subsection 5.3.4.1 write-up was not intended to imply that results of outfall sampling would replace any samples specified in the surface release sampling plan for any PRS. The intent is to evaluate relevant outfall data *in addition to* surface sampling data for the surface release PRSs. This backup strategy recognizes that contaminants from past surface spills may have migrated to outfalls during storm water runoff events. The outfalls are labeled on Figures 5-3-6 through 5-3-21.

b. LANL shall analyze all samples from the units in this section using SW846 methods for the full range of metals (including mercury), SVOCs, VOCs and pesticides as indicated in Table 5-3-1.

Response

See discussion on analytical methods in general Comment No. 1c and specific Comment No. 5.

c. Does LANL mean sampling of the top 6 inches when it refers to surface soil sampling?

Response

Yes, unless the samples will be analyzed for VOCs, in which case the sample will be taken at 6 to 12 in. Please see Appendix D, Subsection 4.1, page D-13 for definitions of sampling types.

5.3.4.2.1 Hand Augered Sampling:

19. LANL makes the statement several times within this portion of the work plan that sampling at one SWMU will confirm no further action recommendations for other SWMUs. Unless the sampling proposed occurs at the actual SWMUs being recommended for NFA then data from this sampling will not support a NFA. NFA recommendations for SWMUs will be evaluated based on the data currently presented for that unit.

Response

The OU 1140 team will use all relevant data to recommend disposition of all PRSs, whether the recommendation for NFA based on sampling and analysis or for appropriate further action. Statements in Subsection 5.3.4.2.1 were intended to convey the intent to investigate possible migration of contaminants beyond the PRS boundaries. Please also see response to Comment No. 18a above.

20. SWMU 46-006(a), p. 5-95 - At what depth will the augered samples be collected, and how will the locations of the samples be determined? LANL shall take two additional samples at a point located adjacent to the storage area in the ditch. These additional samples should be collected at 0-6 inches and at two feet depth or bedrock (whichever is reached first). This will increase the number of samples to be collected and analyzed at this SWMU to four.

Response

Depth of hand augering at TA-46 depends on depth to tuff bedrock. In the ditch at SWMU 46-006(a), the depth is estimated to be shallow, probably less than 2 or 3 ft.

Hand-auger samples H-1 and H-48 are located in the ditch directly below the former drum storage area, which is paved and slopes to the ditch. These two samples meet the criteria specified in Comment No. 20. The bottom of the ditch is fairly level and water ponds in this section; PCOCs may still be present there. In addition, sample H-3, located upstream, is intended to detect possible contaminants that may have entered the ditch from drums stored outside the storage area; the sample is relevant to the PRS. Samples H-49 and H-50 are located downstream and placed to detect contaminant migration.

The total number of sample locations relevant for this PRS is five, with a possibility of three samples per auger hole. Please see response to Comment No. 18A for a discussion of outfall sample evaluations.

21. SWMU 46-008 (g), p. 5-95 - How will the location of each sample be determined? Three samples is not adequate for such a large area. Additional samples should be collected at areas of any surface staining. A surface sample (0-6 inches) should be collected at the previous location of the drums and analyzed as using SW846 for metals, SVOCs, VOCs and PCBs. Why was uranium determined to be of potential concern? At one location in the ditch the top 6 inches should be

analyzed separately from the bottom 6 inches, creating two samples from one auger position.

Response

The three sample locations for this PRS are located near the top, middle, and lower end of the shallow drainage ditch traversing the area. The OU 1140 team reevaluated this PRS and determined that a surface sample in the unpaved former storage area is also appropriate. An additional soil sampling point with possible surface staining was selected near the edge of the asphalt (see attached revised figure). All samples will be analyzed for VOCs, SVOCs, metals, and PCBs.

The large area south of the drainage ditch slopes rather steeply toward the ditch. It is not a suitable surface for storage and shows no sign of having been used as such. In addition, the area contains a number of utility lines (water line vents and gas line valves) that should have limited storage in that area. The team feels that samples from the southern area are unnecessary and that the three sampling points in the ditch will adequately determine if contamination is present at the PRS.

Uranium is not considered a PCOC at this PRS and no uranium analysis is requested.

If possible, hand-augered sampling will collect two independent samples from 0 to 6 in. and 12 to 18 in. or at the soil/tuff interface.

22. SWMU 46-003 (h), p. 5-100 - Text on page 5-76 indicates that there is a concrete slab under the outfall which acts as a splash guard. Sampling should occur adjacent to this concrete slab unless it no longer exists. In addition, LANL shall take two additional samples by hand auger at 18 inches depth in the same location as the two surface samples under the outfall. Analysis should be for volatiles, semi-volatiles and metals.

Response

Agreed. Surface samples S31 and S74 on Figure 5-3-9 and on the sample locations map in Appendix H will be replaced by hand augered samples collected down to 18 in. or to the soil/tuff interface. If possible, additional samples shall be taken at 6 to 11 in. and 13 to 18 in. to be analyzed for VOCs, SVOCs, and metals.

23. SWMU 46-006(b), p. 5-100 - What is the depth of sample collection for the borehole? Text on page 5-77 for this unit indicates that there was visible oil staining in the storm drain and at the outfall. Additional surface samples should be collected at areas of visible staining especially if these are in the storm drain. LANL shall provide information about additional stains from recent field observation.

Response

Near-surface samples are generally collected 0 to 6 in. from under asphalt.

At the request of the New Mexico Environment Department (NMED) Agreement in Principal (AIP) evaluator, two additional near-surface sampling points were selected at stains in this PRS. They will be analyzed for gamma emitters, isotopic uranium, SVOCs, metals, and PCBs. The upper portion of this area has recently been reconfigured as a parking lot.

24. SWMU 46-006 (d), p. 5-1. - Based on the description of this SWMU provided on page 5-78, deeper samples will be necessary for this unit especially where the washdown drain discharges and areas of oily accumulation. LANL shall revise the sampling plan to indicate sampling depth. LANL shall explain how the locations of the surface soil samples were selected. The location of the washdown drain should be noted on Figure 5-3-12. Included in the current description should be an indication if staining is obvious now.

Response

The sampling plan for SWMU 46-006(d) has been revised to specify hand-augered samples. In addition, sample locations were modified and an additional sample was included. The sampling locations were selected on the basis of visible staining and areas where spent materials may have been discarded. Portions of the new sampling plan relevant to Comment No. 24 include:

Sampling Overview. Sampling at SWMU 46-006(d), north of building TA-46-31, will consist of the collection of five hand-augered samples and one surface soil sample in the area immediately north and downgradient of the asphalt area adjacent to TA-46-31 (Figure 5-3-12). Data from samples at Outfall AG, AH, and AI, described in Subsection 5.4, will also be used to make decisions for this SWMU.

The perimeter of TA-46-31 has been modified and extended over the years resulting in a condition where previously exposed surface areas to the north of the building (former "back door" areas) are now under the foundations of newer construction. The rationale for sampling is that as the old areas were disturbed and excavated for the newer foundations, that excavated fill may have been simply spread on the surface north of the building and partially covered by pavement. Hand-augered samples positioned to the north of the area where the building expansion has occurred are expected to identify the presence or absence of possibly contaminated fill that may have been redistributed because of construction activities.

Sampling Rationale. Reconnaissance screening of the soil to the soil/tuff interface is required to determine if potential contamination is above SALs. Upon completion of engineering surveys, the Phase I investigation will consist of drilling five hand-augered holes. The hand-augered samples will evaluate PCOCs in the subsurface of PRS 46-006(d).

PRS 46-006(d) Subsurface Component. Sample collection at this PRS will consist of drilling five hand-augered holes to the soil-tuff interface or to the practical mechanical depth a hand auger can be advanced, whichever is encountered first. The auger hole locations will be positioned to the north of TA-46-31. Three analytical samples (specimens), 0.5 ft minimum in length, will be removed from the augered sample at the surface, midpoint, and total depth.

Sample collection will be procedurally controlled through the use of LANL-ER-SOP-06.10, Hand Auger and Thin-Wall Tube Sampler.

25. SWMU 46-006 (f), 5-79 - LANL shall provide a description of the visual inspection of this area. Is there a reason to suspect discharges in and around this building?

Response

The description of the PRS on page 5-79 is accurate except that there is asphalt paving at the south end of the building. Drainage from the area is to the north around the building and into a storm drain that serves this entire section of TA-46. Anecdotal remarks from site workers indicate that in the past storage was indiscriminate and not well controlled. It is reasonable to suspect past discharges around the building.

All items have been removed and the area has been cleaned. No material is stored outside the building. Staining is not evident; parts of the paving are covered with soil which accumulated in level areas during rain and snow events.

26. SWMU 46-007, p. 5-107 - LANL shall collect an additional 0-6 inch surface sample at the location of the green stain at the head of the ditch as described on page 5-80. What is the depth of the staining? An additional sample should be collected below the staining if it extends deeper than 6 inches. It is not obvious how sampling of the ditch will confirm a NFA recommendation for SWMU 46-010 (a), as background text indicates that multiple contaminants have been released to this ditch by operations in the building.

Response

The green stain is material absorbed into the surface of the exposed bedrock at the head of the ditch. The stain is only millimeters thick. There is no green stain on soil; however, small pebbles spalled from the rock show a green deposit on one surface. An informal qualitative analysis indicated that the stain was copper, as expected from knowledge of process of the heat pipe research. Therefore, LANL will not collect a surface sample in the area of the stain.

As requested, a surface sample will be taken within one foot downhill from the stained area and analyzed for the same suite as other SWMU 46-007 samples: gamma emitters, isotopic uranium, SVOCs, and metals.

Sampling at one SWMU will not be used to confirm NFA for another SWMU. This phrase represents a poor choice of words. Section 6.2.2 accurately describes the relationship between SWMUs 46-007 and 46-010(a).

27. SWMU 46-008 (b), p.5-107 - LANL shall explain how the location of the surface samples are selected.

Response

Since no visible indications of contamination were observed at this PRS and no contaminants were detected using field screening, sampling points were selected at random using accepted EPA randomization techniques.

28. SWMU 46-008 (d), p. 5-107 - LANL shall provide a current description of this site, as text on page 5-81 indicates that there are old 55 gallon drums and vessels as well as an oily spill at this site. If the oily spill is still visible then it should also be sampled.

Response

The text on page 5-81 clearly states that the inspection reporting drums and spills was conducted in 1986. It should have been stated in the text that the OU 1140 team inspected the site in 1992 and that no material or drums are currently stored in the open.

The unpaved area "on the hill" south of the west wing of the building is empty except for a utility manhole and is covered with weeds. No soil staining is visible, so the one soil sample S-69 is located in the channel draining the site. A stain was observed on asphalt. Sample S-70 is located on the soil below the stain. This area is larger than shown on Figure 5-3-18 and should include the area within the relocated fence as shown in the revised figure submitted with this notice of deficiency response. There is a new concrete pad adjacent to the building that has rust stains but no oil stains. The pad is empty.

29. SWMU 46-008 (f), p. 5-114 - Text on page 5-81 indicates that the drainage direction is unclear; therefore, LANL shall take an additional surface sample. Sample locations should be based on field screening or visual inspection of the area. How is outfall RR related to this SWMU? There does not appear to be a drainage ditch close to this unit which reaches outfall RR.

Response

The area was recently observed in a rainstorm. Drainage is to the south into the ditch leading to Outfall RR, which is south and slightly east of SWMU 46-008(f) (off the lower right margin shown in Figure 5-3-20). As shown on the map of sample locations in Appendix H, LANL will be sampling the ditch.

Sampling point S-29 is located on soil adjacent to the pavement. It is difficult to place a second sampling point in soil at this PRS because other unpaved areas are at a higher level than the pavement. Stains on the pavement are of the type found in parking lots. The OU 1140 team believes that sampling at S-29 and in the ditch most reasonably addresses this SWMU.

30. SWMU 46-010 (d), p. 5-114 -

a. LANL shall provide a current description of this site (staining?). How will the location of the two surface samples be selected?

Response

The description in the work plan is inaccurate. A strip of asphalt about 6 ft wide is located along the south end of the building. A locked solvent storage shed is located on the strip as indicated on Figure 5-3-21. There is no door opening on the south side of TA-46-41. The asphalt strip is empty and there are no visible signs of staining. An unpaved strip with weeds is located between the asphalt and the fence surrounding the site. The two sampling points are in the soil nearest the storage shed. Because there is no sign of staining on soil or asphalt, the sample points were chosen by EPA-approved randomization.

b. Table 5-4-4 on page 5-138 indicates that outfall AO will not be sampled; therefore, explain how data from this outfall will provide information about the above SWMU. The outfall location should be provided on Figure 5-3-21.

Response

At the time the work plan was being finalized, the road to the new LANL Sanitary Wastewater System Consolidation (SWCS) facility was being built. Outfall AO was subsequently obliterated. Because the entire area around the outfall was disturbed during construction, data from the site of the former outfall would be meaningless in relation to storage area 46-010(d), therefore, decisions will be made on the basis of sampling points described in Comment 30.a.

<u>5.4 Outfalls:</u>

31. 5.4.4.2 Sample Collection, p. 5-148 - Information in this section needs to be clarified prior to EPA review of the proposed sampling for each outfall.

a. First Paragraph - What is the depth of the tuff bedrock? Analytical samples are to be removed at the surface, middle, and bottom of each augered hole; however there is no reference by which to evaluate this statement. The third sentence indicates that the analytical sample intervals will be a minimum of 0.2 ft in length, which contradicts the last sentence of the paragraph which indicates that a minimum of 6 inches of sample material must be collected for each sample submitted for analysis. LANL needs to clarify this paragraph.

Response

The OU team has dealt with this issue in preparation for field work. Below is the proposed approach.

The depth to the tuff bedrock ranges from approximately 0.5 ft to 8 ft. As stated on page 5-148, paragraph 2, line 6, "the hand auger sampling technique...will yield up to three analytical samples per sample hole location." The outfall samples will be collected per 5-ft intervals. The first sample will be collected from the surface. The selection of the second and third samples (0 to 5 ft interval and 5 to 10 ft interval, respectively) will be based on field screening (for radiation and organic vapors) and hydrologic and geologic observations. In the absence of distinguishing features, the samples will be collected from the bottom of the 5-ft interval. If the soil/tuff interface is reached at a depth less than the 5-ft interval, the sample will be collected at the interface. For those locations where the soil/tuff interface is 0.5 ft to 1 ft depth, only one sample will be collected.

The following correction should be noted. The analytical sample interval will be a minimum of 0.5 ft (not 0.2 ft). This is in agreement with the last sentence in the work plan paragraph, which indicates that a minimum of 6 in. of sample material is needed for each sample submitted for analysis.

b. Second Paragraph - LANL needs to indicate the depth of sample collection for the sediment trap in the center of the trap, and the sample to be collected on the lateral border.

Response

The depth to the tuff bedrock in the sediment traps ranges from approximately 0.5 ft to 3 ft. The selection of samples will be determined as discussed above.

c. Third Paragraph - LANL needs to provide the depths of the surface sediment samples.

Response

Samples that will be analyzed for VOCs will be collected from 6 to 12 in., or as deep as possible if there is less than 12 in. of sediment. The depth of the sediment samples for other analytes will be 0 to 6 in.

d. Figure 5-4-14 indicates sediment/sludge samples will be taken at outfalls Y and AA, yet there is no discussion of this type of sample collection. LANL shall revise text to discuss this.

Response

Outfalls Y and AA discharge into storm drains. Sediment samples will be collected from within the drains, approximately 3 ft to 6 ft below the paved surface. In order to sample the sediment, metal grates will be temporarily removed to allow a sampling device to be lowered into these locations. Sludge/sediment sampling is described in Appendix D, Section 4.4.

e. When a figure such as Figure 5-4-5 indicates that the outfall is sampled does that mean that a sample is taken from three depths? There is a different symbol for hand augered samples which are somewhat described in this section. LANL needs to clarify the type of sample being collected at the outfall and the depth(s) of collection.

Response

EPA's comment indicates that these figures were not as clear as we had hoped. Using Figure 5-4-5 as an example, the bold type-face at Outfall Q indicates that samples will be collected to characterize effluent from this outfall. The samples will be collected downstream of Outfall Q, at the locations marked as H-162 and H-163 on the figure. The "X" at Outfall Q marks the exact location of the outfall, not a sample location. Each hand-auger location will be sampled as described in our response to Comment 31A.

32. Table 5-4-9 - Sample numbers in table should correlate to text. LANL shall revise table.

Response

This problem was corrected in the OU 1140 errata. Please see response to Comment 1D.

5.5 Landfills:

33. 5.5.1.2.1 Existing Information on Nature and Extent of Contamination, p. 5-166 - When LANL indicates that the levels of metals from previous sampling events were below EPA guidelines under 40 CFR 261.24, this only means that the metals do not exhibit the characteristic of toxicity, and therefore, the waste is not considered a hazardous waste. This is a very different type of measurement then what is required under Subpart S which is to compare the metal level with an action level. A metal may not exhibit toxicity and still exceed an action level.

Response

LANL agrees with the EPA comment, and as indicated in Table 5-5-6 of the work plan, we will be analyzing PRS 46-009(a) samples for metals.

34. 5.5.4.2 PRS Sampling Summaries, p. 5-179 -

a. SWMU 46-009 (a) -

i. What is the anticipated depth of the six boreholes to be drilled? How many samples does LANL anticipate collecting and submitting for analysis from these boreholes?

Response

The anticipated depth of the six boreholes is 20 ft. LANL plans to collect six analytical samples per borehole. One per five ft, one at the total depth, and one at random. Submission for analysis will be guided by field screening for radiation, organic vapors, moisture content variations, and/or other hydrologic or geologic observations made on the core.

ii. There is no discussion of the hand augered four samples holes in the landfill near the canyon bottom. (SWSC Canyon). LANL shall describe how many samples will be collected, where samples are collected, and the method for collection for these holes.

Response

The discussion had inadvertently been left out of the subsection. It has now been added as follows:

Four hand-augered sample holes will be advanced to a depth of 3 ft to fill/bedrock interface, whichever is encountered first. Hand-auger hole locations will be at the base of the slope that is formed by the landfill. Hand-auger locations are provided on Figure 5-5-5. Three analytical samples (specimens), 0.5 ft minimum in length, will be removed from each augered sample, at the surface, midpoint, and total depth.

5.6 Stack Emissions:

35. SWMU 46-004 (d2) - An examination of the proposed sampling locations and the location of the stack in TA-31-24 from which the release of beryllium occurred show no correlation. LANL should be sampling areas closer to the stack. LANL shall provide an explanation as to why there are no locations closer to this stack which may be analyzed of field screened for beryllium.

Response

As described in the text on p. 5-193, and in the overall sample location map in Appendix H, numerous soil samples will be collected throughout TA-46, including areas near TA-46-24. Analytic data from many of these samples will be evaluated for the presence of beryllium. The sample locations shown on Figures 5-6-4 through 5-6-6 are intended to have been unaffected by construction or surface transport processes. Contamination at these sites will be directly attributable to airborne contamination from

the SWMUs of Aggregate 5.6. The highly industrialized nature of the mesa top at TA-46 makes such locations quite rare -- the mesa-top locations shown in Figure 5-6-5 are the nearest "pristine" locations to the buildings suspected of hazardous stack emissions.

Chapter 6:

36. 6.1.1 Listed PRSs Recommend for DA, p. 6-1 - EPA does not approve deferred action until decommissioning for these drain lines. Should results of sampling at outfalls and septic systems indicate release of hazardous constituents at significant levels then LANL will be required to evaluate these drain lines for possible leakage and breaks in the lines prior to decommissioning.

Response

LANL agrees with the comment, as indicated in Subsection 6.1.1 of the work plan. We will reevaluate recommendations for deferred action if analytical results from sampling-related PRSs show concentrations above screening action levels.

37 6.1.2.2 SWMU 46-004(b), p. 6-7 - Has LANL made a visual inspection of the locations of the tank to determine if there are any visible signs of leakage from the tank? In the last sentence first paragraph on page 6-8, the sampling plan should be in Subsection 5.3.4.2.2

Response

LANL made a visual inspection of the tank locations, and no visible signs of leakage from the tank were observed.

Our reference to Subsection 5.3.4.2.3 was incorrect. The reference should have been to Subsection 5.3.4.2.2.

38. 6.1.2.2 SWMU 46-003 (e), p. 6-8 - EPA does not approve NFA for this component of a larger SWMU. Pending on the results of the sampling of other components of this SWMU, LANL may request removal of the SWMU in its entirety.

Response

LANL accepts the comment and will not seek a partial NFA. LANL will wait until analytical results are available for all the PRS components before making decisions and recommendations.

39. Table 6-5, p. 6-9 - SWMU 46-010(d) is currently listed in the HSWA portion of the RCRA permit for investigation. As there is no discussion of this unit in the text, EPA assumes the unit was included in this table by error. LANL shall revise the table or provide an explanation for the inclusion of this SWMU.

Response

SWMU 46-010(d) should not have been included in Table 6-5. This error was listed in the OU 1140 errata that were previously sent to EPA (copy attached). See page 3.

Attachment 1

Target Compound Lists for Broad-Spectrum Analyses, as Negotiated in Contracts with Analytical Laboratories

ATTACHMENT 2

VOLATILE ORGANIC COMPOUNDS

Target Compound List	Estimated Quantitation Limits Water µg/L	Soil/Solids µg/kg
Chloromethane	10	10
Vinyl Chloride	10	10
Bromomethane	10	10
Chloroethane	10	10
Acetone	20	20
Dichlorodifluoromethane	10	10
Iodomethane	5.0	5.0
Trichlorotrifluoroethane	5.0	5.0
Trichlorofluoromethane	5.0	5.0
Methylene Chloride	5.0	5.0
1,1-Dichloroethene	5.0	5.0
Carbon Disulfide	5.0	5.0
t-1,2-Dichloroethene	5.0	5.0
1,1-Dichloroethane	5.0	5.0
c-1,2-Dichloroethene	5.0	5.0
Bromochloromethane	5.0	5.0
Chloroform	5.0	5.0
1,2-Dichloroethane	5.0	5.0
1,1-Dichloropropene	5.0	5.0
2-Butanone	20	20
2,2-Dichloropropane	5.0	5.0
1,1,1-Trichloroethane	5.0	5.0
Carbon Tetrachloride	5.0	5.0
Benzene	5.0	5.0
1,2-Dichloropropane	5.0	5.0
Trichloroethene	5.0	5.0
Dibromomethane	5.0	5.0
Bromodichloromethane	5.0	5.0
t-1,3-Dichloropropene	5.0	5.0

method for volatiles, OLM01.8 (or more recent).

Methods

The U.S. EPA methods that are options for use are method SW-8260 (11/90 or more recent) or the CLP method for volatiles (OLM01.8 or more recent, using capillary column). These methods are based on purge and trap sample extraction/concentration followed by gas chromatography/mass spectrometry analysis.

SW-846 Method 5030 describes sample preparation and extraction/concentration via purge and trap technique prior to analysis for volatile organics.

Dimethyl phthalate	10	330
2,4-Dimethylphenol	10	330
2,4-Dinitrophenol	50	1600
Di-n-butylphthalate	10	330
4,6-Dinitro-2-methylphenol	50	1600
2,4-Dinitrotoluene	10	330
2,6-Dinitrotoluene	10	330
Di-n-octyl phthalate	10	330
Bis(2-ehtylhexyl)phthalate	10	330
Fluoranthene	10	330
Fluorene	10	330
Hexachlorobenzene	10	330
Hexachlorobutadiene	10	330
Hexachlorocyclopentadiene	10	330
Hexachloroethane	10	330
Indeno(1,2,3-cd)pyrene	10	330
Isophorone	10	330
2-Methylnaphthalene	10	330
2-Methylphenol	10	330
4-Methylphenol	10	330
Naphthalene	10	330
2-Nitroaniline	50	1600
3-Nitroaniline	50	1600
4-Nitroaniline	20	ND
Nitrobenzene	10	330
2-Nitrophenol	10	330
4-Nitrophenol	50	1600
N-Nitrosodimethylamine	ND	ND
N-Nitrosodiphenylamine	10	330
N-Nitroso-di-propylamine	10	330
2,2'-oxybis(1-Chloropropane)	10	330
Pentachlorophenol	50	1600
Phenanthrene	10	330
Phenol	10	330
Pyrene	10	330

PESTICIDES/AROCLORS

Target Compound List	Estimated Quantitation Limits water, µg/L
Aldrin	0.04
α-BHC	0.03
β-BHC	0.06
δ-BHC	0.09
Y-BHC (Lindane)	0.04
Chlordane (technical)	0.14
4,4'-DDD	0.11
4,4'-DDE	0.04
4.4'-DDT	0.12
Dieldrin	0.02
Endosulfan I	0.14
Endosulfan II	0.04
Endosulfan sulfate	0.66
Endrin	0.06
Endrin Aldehyde	0.23
Heptachlor	0.03
Heptachlor epoxide	0.83
Methoxychlor	1.76
Toxaphene	2.4
Aroclor-1016	0.65
Aroclor-1221	0.65
Aroclor-1232	0.65
Aroclor-1242	0.65
Aroclor-1248	0.65
Aroclor-1254	0.65
Aroclor-1260	0.65

Determination of Estimated Quantitation LIMITS(EQLs) for Various Matrices

Matrix	Factor

INORGANICS

II. Target analytes/methods citations -

Following are the sample preparation procedures that are appropriate for use. The most recent version of SW-846 should be used. Alternatively, CLP sample preparation procedures (from Statement of Work ILM03.0) may be used, if appropriate for the matrix.

- SW-3005 Acid Digestion of waters for total recoverable or dissolved metals for analysis by flame AAS or ICP.
- SW-3010 Acid digestion of aqueous samples and extracts for total metals for analysis by flame AAS or ICP.
- SW-3020 Acid digestion of aqueous samples and extracts for total metals for analysis by furnace AAS, with the exception of As and Se, which are to be prepared according to methods 7060 and 7740.
- SW-3040 Dissolution procedure for oils, greases or waxes.
- SW-3050 Acid digestion of sediments, sludges, and soils.
- SW-1311 Toxicity Characteristics Leaching Procedure (Note that changes made in the Federal Register, Volume 57, No 227, p. 55114, must be incorporated.
- SW-3051 Microwave digestion

Target Analyte Lists and detection limits follow:

Estimated Detection Limits (EDL) for water samples are based on CLP "Contract Required Detection Limits."

SW-6010 (ICPAES)

Analyte	Water EDL, µg/L	Soil EDL, mg/kg
Aluminum	200	40
Antimony	60	12
Barium*	200	40
Beryllium	5	1
Cadmium *	5	1
Calcium	5000	1000
Chromium *	10	2
Cobalt	50	10
Copper	25	5
Iron	100	20

SW-9010, 9010A, 9012, EPA 335.2

Analyte	EDL, µg/L	EDL, mg/kg
Total Cyanide	10	0.05

Soil EDLs for SW-846 method 6010 are derived from a 1 gram sample taken to a final volume of 200 mL.

Soil EDLs for SW-846 method 7470 are derived from an 0.2 gram sample taken to a final volume of 100 mL.

Soil EDLs for CLP ILM03.0 method 335.2 are derived from a 5 gram sample taken to a final volume of 250 mL.

The contractor may vary weights and final volumes for metals and cyanide analyses; however, any allowable variance must still equal the EDL

The US EPA SW-846 methods that are options for use are identified in the Target Analyte List. In addition, CLP inorganics methods may be used from Statement of Work ILM03.0.

TCLP metals are identified with an asterisk (*) and may be requested as a separate determination. Laboratories should consider EDLs for TCLP metals using the Toxicity Characterization Leaching Procedure to be the regulatory limits. Method SW-1311 (7/92) is the method to be used for TCLP.

Method Options that can be used:

SW-8330 (11/92) or

USATHAMA AUGUST 1989 REVERSED-PHASE METHOD FOR THE DETERMINATION OF EXPLOSIVE RESIDUES IN SOIL

Analytes in water	EQLs - micrograms/L	
	Low	High
RDX * #	0.84	14.0
135TNB * #	0.26	7.3
13DNB * #	0.11	4.0
NB * #	____	6.4
246TNT * #	0.11	6.9
24DNT * #	0.02	5.7
26DNT * #	0.31	9.4
2ADNT *	0.035	____
4ADNT *	0.06	____
HMX #	____	13.0
TETRYL #	____	20.0
2NT	____	12.0
3NT	____	7.9
4NT *	____	8.5

Where there are blanks above, the EQLs have not been determined. Assume an EQL of 1.0 micrograms/L for the low waters and an EQL of 10 micrograms/L for the high waters where values are missing. As more information is available, it will be provided.

Method options that can be used:

SW-8330 (11/92) or

* USATHAMA 1990 IMPROVED SALTING-OUT SOLVENT EXTRACTION METHOD FOR DETERMINATION OF LOW LEVELS OF NITROAROMATICS AND NITRAMINES IN GROUND WATER

USATHAMA 6/30/88 METHOD NUMBER UW14, DETERMINATION OF EXPLOSIVES IN WATER BY HIGH PRESSURE LIQUID CHROMATOGRAPHY

Analytes in water samples — Assume EQLs of 25 micrograms/L

Nitroglycerine (NG)
Pentaerythritol tetranitrate (PETN)

Method

USATHAMA AUGUST 1989 REVERSED-PHASE HPLC METHOD FOR THE DETERMINATION OF NG AND PETN IN WATER

Analytes in soil samples — Assume EQLs of 0.50 mg/kg

Nitrocelluose Assume EQL of 70.0 micrograms/L

Method

USATHAMA METHOD FOR THE DETERMINATION OF NITROCELLUOSE IN WATER

The noted assumptions, above, are based on the USATHAMA lower limit of the linear concentration range.

Analytes in water	Estimated Quantitation Limits (EQLs) - (pCi/L)	Method
Gross Alpha/Beta	3	SM 703[1]
Gross Gamma	100	ER 150[2]
Am-241	0.1	ER 120
Pu-238 and 239/240	0.1	ER 160
H-3	300	ER 210
Cs-137	20	ER 130
Am-241	20	ER 130
Gamma-spec Isotopes	++	ER 130
U-234, 235, & 238	0.1	ER 310
Sr-90	5	ER 190
Ra-226	1	SM 706
Ra-228	~0.5	SM 707
Th-228, 230, &232	0.1	Alpha-spec
Th-234	20	ER 130
Pb-210	*	*

1. "Standard Methods for the Examination of Water and Wastewater". 16th Ed, APHA,AWWA, and WPCF, 1985.

2. "Health and Environmental Chemistry Analytical Techniques". LA-10300-M, 1983.

++ Isotopic determination is highly variable, depending on instrumentation, decay photon energies, and branching ratios. Provide a list of some representative isotopes run routinely with the BAFO.

* Provide with BAFO

Attachment 2

Technical Assumptions for Data Collection and Evaluation

Attachment 3

ERRATA

Operable Unit 1140 Draft Work Plan
May 1994

May 13, 94

ERRATA
Operable Unit 1140 Draft Work Plan
May 1994

Many of the errata discussed herein clarify the intention of radiation surveys (RAD surveys) in the RFI Work Plan. In some instances, the term "rad field screening" was used in the text where a "RAD survey" was intended, and "RAD surveys" were listed in many of the tables where rad "field screening" was intended. Field screening is intended to mean a radiation scanning conducted after the samples have been collected. A RAD survey must be conducted before sampling as the results of the RAD survey are needed to select the sample locations. RAD surveys are conducted on a grid, laid out over a given area, while radiation readings are taken every few feet over that area. Other problems that were found in the Work Plan are discussed below.

— page 1-9, (Table 1-3)

According to Table 1-3, 1988 SWMU number 46-003(e) is described in Subsection 5.1.

SWMU number 46-003(e) is described in Subsection 5.1 and Chapter 6.

— page 5-51, (last line of 1st paragraph)

The Work Plan states that for SWMU 46-003(d):

> "All sample locations will be taken with the benefit of field screening data to locate maximum PCOCs."

It should read:

> "All sample locations may be modified to the locations where maximum (above background) radiation levels are detected during a RAD survey."

— page 5-64, (4th line of 1st paragraph)

The Work Plan states that:

> "Geophysical surveys will be performed to locate all subsurface components of TA-46 lagoons. Various geophysical methods are available to locate subsurface lagoon system components. The laboratory ER Program technical team that maintains expertise in these techniques will be consulted for the most appropriate method."

It should read:

> "If Phase I sampling results indicate contamination above SALs, Phase II sampling and analysis will be conducted. Phase II will include geophysical surveys to locate subsurface components of TA-46 lagoons."

— page 5-66 & 67,

Table 5-2-5 indicates that a geophysical survey will be conducted for all the listed PRSs.

A geophysical survey is not necessary for this Aggregate.

— page 5-69, (4th line of 1st paragraph)

The Work Plan states that for SWMU 46-002:
"These samples will be biased by the use of field screening techniques."

It should read:
"A RAD survey will be conducted to bias sample locations."

— page 5-82, (1st line of 2nd paragraph)

The Work Plan states that:
"SWMU 46-010(d) is an unpaved storage area located on the south side of warehouse TA-46-41."

It should read:
"SWMU 46-010(d) is a paved storage area located south of warehouse TA-46-41. Samples will be collected within the unpaved grassy area directly downgradient (south) of the storage shed near the edge of the asphalt pad."

— page 5-100, (2nd line of 1st paragraph)

The Work Plan states that for SWMU 46-003(f):
"Locations will be determined by field screening..."

It should read:
"A RAD survey will be conducted to bias sample locations."

— page 5-114, (last paragraph)

The Work Plan states:
"Sampling at SWMU 46-010(d), the unpaved satellite accumulation area located on the south side of TA-46-41, will consist of the collection of two surface soil samples within the SWMU (Fig. 5-3-21). Data from samples at Outfall AO, described in Subsection 5.4, will also be used to make the decision for this SWMU."

It should read:
Sampling at SWMU 46-010(d), the satellite accumulation area located on the south side of TA-46-41, will consist of the collection of two surface soil samples within the SWMU (Fig. 5-3-21). Soil samples will be taken in the soil downhill from the paved storage area.

— page 5-194,

Table 5-6-5 indicates that a geophysical survey will be conducted for all the listed PRSs.

A geophysical survey is not necessary according to section 5.6 of the Work Plan. Therefore, geophysical survey should not be marked.

— page 6-9, (Table 6-5)

PRS 46-010(d) is listed in this table as being recommended for NFA. The location of this PRS is listed as building TA-46-1.

PRS 46-010(d) is not being recommended for NFA, and should be deleted from this table. The correct location of PRS 46-010(d) is building TA-46-41

— page D-16, (1st line of last paragraph)

The Work Plan states:

> In general, every sample taken at TA-46 will be screened for gamma, beta, and alpha radioactivity; and organic vapors.

It should read:

> In general, every sample taken at TA-46 will be screened for gamma, beta, and alpha radioactivity. Organic vapor screening will be conducted on subsurface samples where VOCs are a PRS PCOC.

— page E-22, (No's. [255], [256])

Table E-2, OU 1140 Sample Locations includes two shallow-angled borehole locations at SWMU lagoon 46-005, line numbers (255) and (256).

These locations should be eliminated as sampling is not warrented. The PCOC is sodium chloride.

— page G-2, (6th line of 2nd paragraph)

The Work Plan states in Appendix G (Unlocated outfall):

> "Engineering drawing ENG-C 38765 shows two separate 2 in.- cast iron pipes leading from floor drains in room 151a."

It should state:

> "Engineering drawing ENG-C 46364 shows two separate 2 in. cast iron pipes exiting the building from floor drains in room 152a."

SITE SURVEY, SAMPLING AND ANALYSIS TABLES,

(Tables: 5-1-7, 5-2-5, 5-3-8, 5-4-9, 5-5-6, 5-6-5)

The "Phase I Sampling and Analysis Plan" sections of the work plan call for all samples to be "field screened." A *RAD survey* was indicated in the following tables wherever the Work Plan call for a *field screening*:

Table No.	Page No.
5-1-7	5-34, 5-35
5-2-5	5-66, 5-67
5-3-8	5-97
5-4-9	5-149, 5-150
5-5-6	5-178
5-6-5	5-194

Although field screening will be conducted for all samples, RAD surveys will only be conducted at selected PRSs. A RAD survey should not be indicated except for the following instances.

— on page 34, (Table 5-1-7)

According to the Work Plan 46-003(d) (the septic system/tank, and the drain fields), requires a RAD survey. Therefore, rows #13 and #14 should have the RAD survey marked.

— on page 66, (Table 5-2-5)

According to the Work Plan 46-002 (the sand filters) requires a RAD survey . Therefore, row #2 should have the RAD survey marked.

— on page 5-97, (Table 5-3-8)

According to the Work Plan 46-003(f) (the sand filter) requires a RAD survey. Therefore, row #1 should have the RAD survey marked.

— on page 5-149, (Table 5-4-9)

According to Table 5-4-9, certain samples being analyzed for Volatile Organic Compounds are marked with an infinity symbol (∞). The infinity symbol indicates that Volatile Organic Analysis will be performed only on hand-auger soil samples (6-12 inches in depth) collected immediately under Industrial Drain outfalls, or from non-outfall PRSs with VOCs listed as a PCOC.

According to Table 5-4-9,the samples for PRS 46-004(r) are the same as those for PRS 46-004(w) (Outfall AA), and the analyte suites for 46-004(r) are included in 46-004(w). The analyte suite for PRS 46-004(r) is now stated separately in this table.

According to Table 5-4-9, PRS 46-006(c) is listed as a PRS associated with Outfall PP. The PRS field should be blank, Outfall PP will remain.

Area of Concern C-46-001 was erroneously omitted from Table 5-4-9, and should be included to immediately follow the last PRS listed in the PRS field.

OTHER SAMPLING AND ANALYSES TABLES CHANGES

Throughout the Chapter 5 Sampling and Analyses Tables, changes were made based on a thorough quality review. These changes are listed in the following pages. Based on this review and the related changes, the Work Plan text and tables listing PCOCs are incorrect and will be revised to be consistent with the following changes. Copies of the modified Sampling and Analyses Tables are attached.

The following errata shows the additions, deletions and the rationale for the changes:

— page 5-34 & 35,

Table 5-1-7 Deletions from Table

PRS #	Change	Rationale
Table 5-1-7 (Entire Table, Excluding Waste Characterization Table)	Remove all Asbestos analyses	Asbestos is not a PRS PCOC
	Remove all Isotopic Cesium analyses	Isotopic Cesium is not a PRS PCOC
46-003-a	Remove PCBs from laboratory analyses	PCBs are not a PRS PCOC
46-003-a Septic Sys. Tank, Dist. Box	Remove Soil Moisture from field laboratory	Tritium is not a PRS PCOC
46-003-b Septic Sys. Tank, Dist. Box	Remove Soil Moisture from field laboratory	Tritium is not a PRS PCOC
46-003-c	Remove Lithologic Logging from field screening	Only appropriate for boreholes
46-003-c Septic Sys. Tank, Dist. Box	Remove Soil Moisture from field laboratory	Tritium is not a PRS PCOC
46-003-d	Remove Asbestos from laboratory analyses	Asbestos is not a PRS PCOC
46-003-e Septic Siphon Tank,Dist. Box, Tank	Remove Soil Moisture from field laboratory	Tritium is not a PRS PCOC
46-003-f Septic Sys. Tank,Manhole, Dist. Box	Remove Soil Moisture from field laboratory	Tritium is not a PRS PCOC
46-003-g Septic Sys. Tank, Septic Dry Well	Remove Soil Moisture from field laboratory	Tritium is not a PRS PCOC
46-004-c	Remove Asbestos from laboratory analyses	Asbestos is not a PRS PCOC
46-004-d	Remove Isotopic Cesium from laboratory analyses	Isotopic Cesium is not a PRS PCOC
46-004-e	Remove Isotopic Cesium from Laboratory analyses	Isotopic Cesium is not a PRS PCOC

— page 5-34 & 35,

Table 5-1-7 Additions to Table

PRS #	Change	Rationale
Table 5-1-7 (Entire table)	Change the laboratory analysis *Isotopic Cesium* to *Alkali Metals*	Isotopic Cesium is not a PRS PCOC Alkali metals are PRS PCOCs
Table 5-1-7 Waste Characterization Table (only) (Entire Table)	Add Asbestos to laboratory analyses	Asbestos may be a PCOC in septic tanks and dry wells
46-004-c	Add Gamma Spectroscopy to field laboratory	Gamma emitters are a PRS PCOC
46-004-d	(VCA) Add Mercury to laboratory analyses	Mercury is a PRS PCOC
	Add Thorium to laboratory analyses	Thorium is a PRS PCOC
	Add Plutonium to laboratory analyses	Plutonium is a PRS PCOC
	Add Gamma Spectroscopy to field laboratory	Gamma emitters are a PRS PCOC
46-004-e	Add Gamma Spectroscopy to field laboratory	Gamma emitters are a PRS PCOC
46-004-p	Add Gamma Spectroscopy to field laboratory	Gamma emitters are a PRS PCOC
	(Reconn & VCA) Add Alkali Metals to laboratory analyses	Alkali Metals are PRS PCOCs

— page 5-66 & 67,

Table 5-2-5 Deletions from Table

PRS #	Change	Rationale
46-002	Remove Soil Moisture from field laboratory	Tritium is not a PRS PCOC
(5)Lagoon System	Remove Organic Vapor from field screening	Not appropriate for surface samples
(6)Lagoon System	Remove Organic Vapor from field screening	Not appropriate for structure samples
46-005 (7) Solar Pond	Remove Isotopic Uranium from laboratory analyses	Isotopic Uranium is not a PRS PCOC
(8) Solar Pond	Remove Isotopic Uranium from laboratory analyses	Isotopic Uranium is not a PRS PCOC
	Remove Organic Vapor from field screening	Not appropriate for structure samples

— page 5-97,

Table 5-3-8 Deletions from Table

PRS #	Change	Rationale
Table 5-3-8 (Entire Table)	Change the laboratory analysis *Isotopic Cesium* to *Alkali Metals*	Isotopic Cesium is not a PRS PCOC Alkali metals are PRS PCOCs
46-006-a	Remove Isotopic Cesium from laboratory analysis	Isotopic Cesium is not a PRS PCOC
46-006-b	Remove Organic Vapor from field screening	VOCs are not PRS PCOCs
46-006-c	Remove Organic Vapor from field screening	VOCs are not PRS PCOCs
46-006-d	Remove Isotopic Cesium from laboratory analysis	Isotopic Cesium is not a PRS PCOC
46-008-a	Remove Organic Vapor from field screening	VOCs are not PRS PCOCs
46-008-b	Remove Organic Vapor from field screening	VOCs are not PRS PCOCs

— page 5-97,

Table 5-3-8 Additions to Table

PRS #	Change	Rationale
46-006-a	Add Gamma Spectroscopy to field laboratory	Gamma emitters are PRS PCOCs
46-006-b	Add Gamma Spectroscopy to field laboratory	Gamma emitters are PRS PCOCs
46-006-d	Add Mercury to laboratory analysis	Mercury is a PRS PCOC
	Add Gamma Spectroscopy to field laboratory	Gamma emitters are PRS PCOCs
46-006-f	Add Gamma Spectroscopy to field laboratory	Gamma emitters are PRS PCOCs
46-006-g	Add Gamma Spectroscopy to field laboratory	Gamma emitters are PRS PCOCs
46-007	Add Gamma Spectroscopy to field laboratory	Gamma emitters are PRS PCOCs
	Add Alkali Metals to laboratory analyses	Alkali Metals are PRS PCOCs
46-008-d	Add Gamma Spectroscopy to field laboratory	Gamma emitters are PRS PCOCs
	Add Mercury to laboratory analyses	Mercury is a PRS PCOC
46-008-f	Add Gamma Spectroscopy to field laboratory	Gamma emitters are PRS PCOCs
46-010-d	Add VOA to field laboratory	VOCs are PRS PCOCs

— page 5-149 & 150,

Table 5-4-9 Deletions from Table

PRS #	Change	Rationale
Table 5-4-9 (Entire Table)	Change the laboratory analysis *Isotopic Cesium* to *Alkali Metals*	Isotopic Cesium is not a PRS PCOC Alkali Metals are PRS PCOCs
46-004-f	Remove Asbestos from laboratory analyses	Asbestos is not a PRS PCOC
46-004-v	Remove Organic Vapor from field screening	VOCs are not PRS PCOCs
46-004-w	Remove X-ray Fluorescence from field screening	No metallic elements at this PRS
	Remove Gross Alpha from field laboratory	No Radioactive isotopes at this PRS
	Remove Total Uranium from laboratory analyses	Uranium is not a PRS PCOC
	Remove Metals from laboratory analyses	Metals are not PRS PCOCs
	Remove Mercury from laboratory analyses	Mercury is not a PRS PCOC
46-005	Remove Isotopic Uranium from laboratory analyses	Uranium is not a PRS PCOC

— page 5-149 & 150,

Table 5-4-9 Additions to Table

PRS #	Change	Rationale
46-004-h	Add Isotopic Thorium to laboratory analyses	Thorium is a PRS PCOC
46-004-m	Add Semivolatiles to laboratory analyses	SVOCs are PRS PCOCs
46-004-r	Add Gross Alpha to field screening	Alpha emitters are a PRS PCOC
	Add Gross Gamma/Beta to field screening	Gamma/Beta emitters are a PRS PCOC
	Add Organic Vapor to field screening	VOCs are a PRS PCOC
	Add X-Ray Fluorescence to field screening	Metallic elements are a PRS PCOC
	Add Gross Alpha to field laboratory	Alpha emitters are a PRS PCOC
	Add PCBs to field laboratory	PCBs are a PRS PCOC
	Add VOA to field laboratory	VOCs are a PRS PCOC
	Add Total Uranium to laboratory analyses	Uranium is a PRS PCOC
	Add VOA to laboratory analyses	VOCs are a PRS PCOC
	Add Semivolatiles to laboratory analyses	SVOCs are a PRS PCOC
	Add Metals to laboratory analyses	Metals are a PRS PCOC
	Add PCBs to laboratory analyses	PCBs are a PRS PCOC
	Add Mercury to laboratory analyses	Mercury is a PRS PCOC
46-004-w	Add PCBs to field laboratory	PCBs are PRS PCOCs

— page 5-178,

Table 5-5-6 Deletions from Table

PRS #	Change	Rationale
Table 5-5-6 (Entire Table)	Change the laboratory analyses *Isotopic Cesium* to *Alkali Metals*	Isotopic Cesium is not a PRS PCOC Alkali Metals are PRS PCOCs
46-009-a	Remove Soil Moisture from field laboratory	Tritium is not a PRS PCOC
	Remove all Isotopic Cesium from laboratory analyses	Isotopic Cesium is not a PRS PCOC
46-009-b	Remove soil moisture from field laboratory	Tritium is not a PRS PCOC

— page 5-194,

Table 5-6-5 Deletions from Table

	Change	Rationale
Table 5-6-5 (Entire Table)	Change the Laboratory Analyses *Isotopic Cesium* to *Alkali Metals*	Isotopic Cesium is not a PRS PCOC Alkali Metals may be PRS PCOCs

— page 5-194,

Table 5-6-5 Additions to Table

PRS #	Change	Rationale
(1) Aggregate 5.6	Add Gross Alpha to field screening	Alpha emitters are PRS PCOCs
	Add Gross Gamma/Beta to field screening	Gamma and Beta emitters are PRS PCOCs
	Add Gamma Spectroscopy to field laboratory	Gamma emitters are PRS PCOCs
(2) Aggregate 5.6	Add Gross Alpha to field screening	Alpha emitters are PRS PCOCs
	Add Gross Gamma/Beta to field screening	Gamma and Beta emitters are PRS PCOCs
	Add Gross Alpha to field laboratory	Alpha emitters are PRS PCOCs
	Add Gamma Spectroscopy to field laboratory	Gamma emitters are PRS PCOCs
(3) Aggregate 5.6	Add Gross Alpha to field screening	Alpha emitters are PRS PCOCs
	Add Gross Gamma/Beta to field screening	Gamma and Beta emitters are PRS PCOCs
	Add Gross Alpha to field laboratory	Alpha emitters are PRS PCOCs
	Add Gamma Spectroscopy to field laboratory	Gamma emitters are PRS PCOCs

Table 5-1-7

Summary of OU 1140 TA-46 Septic Systems and Dry Wells Site Surveys, Sampling and Analysis

Structure Sample Total 59
Surface Sample Total 17
Subsurface Sample Total 45

Drill Rig	PRS	Outfall Field ID	PRS Type Outfall Type	Phase 1 Approach	Field Surveys: Land Survey	Field Surveys: Geophysics	Field Surveys: Radiation	Samples: Sampled Media	Samples: Structure	Samples: Surface	Samples: Subsurface	Field Screening: Gross Alpha	Field Screening: Gross Gamma/Beta	Field Screening: Organic Vapor	Field Screening: Combustible gas/oxygen	Field Screening: X-Ray Fluorescence	Field Screening: Lithologic Logging	Field Lab.: Gross Alpha	Field Lab.: Tritium	Field Lab.: Soil Moisture	Field Lab.: Gamma Spectroscopy	Field Lab.: PCB	Field Lab.: VOA	Laboratory Analyses: Gamma Spectroscopy	Laboratory Analyses: Isotopic Americium	Laboratory Analyses: Total Uranium	Laboratory Analyses: Isotopic Uranium	Laboratory Analyses: Isotopic Plutonium	Laboratory Analyses: Isotopic Thorium	Laboratory Analyses: Alkali Metals (Cs, Li)	Laboratory Analyses: VOA (SW 8240)	Laboratory Analyses: Semivolatiles (SW 8270)	Laboratory Analyses: TCLP	Laboratory Analyses: Metals (SW 6010)	Laboratory Analyses: PCB (SW 8080)	Laboratory Analyses: Asbestos	Laboratory Analyses: Mercury	Laboratory Analyses: Herbicides	Laboratory Analyses: Pesticides	Aggregate
(1)	46-003-a		Septic Sys./Tank	Reconn	1	1		Sludge/Tuff	3	0	0	1	1	1		1	1	1			1		1	1			1		1		1	1		1			1			5.1
(2)	46-003-a		Septic Sys./Manhole	Reconn	1	1		Sludge/	2	0	0	1	1	1		1		1			1		1	1			1		1		1	1		1			1			5.1
(3)	46-003-a		Septic Sys./Dist. Box	Reconn	1	1		Sludge/Tuff	3	0	0	1	1	1		1	1	1			1		1	1			1		1		1	1		1			1			5.1
(4)	46-003-a		Septic Sys./Dist. Box	Reconn	1	1		Sludge/Tuff	3	0	0	1	1	1		1	1	1			1		1	1			1		1		1	1		1			1			5.1
(5)	46-003-a		Septic Drain field	Reconn	1	1		Soil/Tuff	0	0	12	1	1	1		1	1	1		1	1		1	1			1		1		1	1		1			1			5.1
(6)	46-003-b		Septic Sys./Tank	Reconn	1	1		Sludge/Tuff	3	0	0	1	1	1		1	1						1								1	1								5.1
(7)	46-003-b		Septic Sys./Dist. Box	Reconn	1	1		Sludge/Tuff	3	0	0	1	1	1		1	1						1								1	1								5.1
(8)	46-003-b		Septic Drain field	Reconn	1	1		Soil/Tuff	0	0	6	1	1	1		1	1			1			1								1	1								5.1
(9)	46-003-c		Septic Sys./Dist. Box	Reconn	1	1		Sludge/Tuff	3	0	0	1	1	1		1		1			1	1	1	1			1				1	1		1	1		1			5.1
(10)	46-003-c		Septic Sys./Tank	Reconn	1	1		Sludge/Tuff	3	0	0	1	1	1		1		1			1	1	1	1			1				1	1		1	1		1			5.1
(11)	46-003-c		Septic Drain field	Reconn	1	1		Soil/Tuff	0	0	9	1	1	1		1		1		1	1	1	1	1			1				1	1		1	1		1			5.1
(12)	46-003-c		Dry Well	Reconn	1	1		Sludge	1	0	0	1	1	1		1		1			1	1	1	1			1				1	1		1	1		1			5.1
(13)	46-003-d		Septic Sys./Tank	VCA	1	1	1	Soil/Tuff	0	4	0	1	1	1		1	1	1			1	1	1	1			1	1	1		1	1		1	1					5.1
(14)	46-003-d		Septic Drain field	VCA	1	1	1	Soil/Tuff	0	5	0	1	1	1		1	1	1			1	1	1	1			1	1	1		1	1		1	1					5.1
(15)	46-003-e		Septic Siphon Tank	Reconn	1	1		Sludge/Tuff	3	0	0	1	1	1		1	1	1			1	1	1	1			1	1			1	1		1						5.1
(16)	46-003-e		Septic Sys./Dist. Box	Reconn	1	1		Sludge/Tuff	3	0	0	1	1	1		1	1	1			1	1	1	1			1	1			1	1		1						5.1
(17)	46-003-e		Septic Sys./Tank	Reconn	1	1		Sludge/Tuff	3	0	0	1	1	1		1	1	1			1	1	1	1			1	1			1	1		1						5.1
(18)	46-003-e		Septic Drain field	Reconn	1	1		Soil/Tuff	0	0	12	1	1	1		1	1	1		1	1	1	1	1			1	1			1	1		1						5.1
(19)	46-003-f		Septic Sys./Tank	Reconn	1	1		Sludge/Tuff	3	0	0	1	1	1		1	1	1			1	1	1	1			1				1	1		1	1		1			5.1
(20)	46-003-f		Septic Sys./Manhole	Reconn	1	1		Sludge/Tuff	3	0	0	1	1	1		1	1	1			1	1	1	1			1				1	1		1	1		1			5.1
(21)	46-003-f		Septic Sys./Dist. Box	Reconn	1	1		Sludge/Tuff	3	0	0	1	1	1		1	1	1			1	1	1	1			1				1	1		1	1		1			5.1
(22)	46-003-f		Sand filter	Reconn	1			Soil/Tuff	0	0	6	1	1	1		1	1	1		1	1	1	1	1			1				1	1		1	1		1			5.1
(23)	46-003-g		Septic Sys./Tank	Reconn	1	1		Sludge/Tuff	3	0	0	1	1	1		1	1	1			1	1	1	1							1	1		1	1					5.1
(24)	46-003-g		Septic Dry Well	Reconn	1	1		Sludge/Tuff	6	0	0	1	1	1		1	1	1			1	1	1	1							1	1		1	1					5.1
(25)	46-004-c		Dry Well	VCA	1	1		Soil/Tuff	0	2	0	1	1	1		1	1	1			1		1	1			1		1		1	1		1	1					5.1
(26)	46-004-c		Dry Well	Reconn	1	1		Sediment/	2	0	0	1	1	1		1	1	1			1		1	1			1		1		1	1		1	1					5.1
(27)	46-004-d		Dry Well	VCA	1	1		Soil/Tuff	0	2	0	1	1	1		1	1	1			1		1	1			1	1	1		1	1		1			1			5.1
(28)	46-004-d		Dry Well	Reconn	1	1		Sediment/	2	0	0	1	1	1		1	1	1			1		1	1			1	1	1		1	1		1	1		1			5.1
(29)	46-004-e		Dry Well	VCA	1	1		Soil/Tuff	0	2	0	1	1	1		1	1	1			1		1	1			1	1	1		1	1		1	1		1			5.1
(30)	46-004-e		Dry Well	Reconn	1	1		Sediment/	2	0	0	1	1	1		1	1	1			1		1	1			1	1	1		1	1		1	1		1			5.1
(31)	46-004-p		Dry Well	VCA	1	1		Soil/Tuff	0	2	0	1	1	1		1	1				1		1							1	1	1		1						5.1
(32)	46-004-p		Dry Well	Reconn	1	1		Sediment/	2	0	0	1	1	1		1		1			1		1	1			1			1	1	1		1	1		1			5.1

Table 5-1-7

Summary of OU 1140 TA-46 Septic Systems and Dry Wells Waste Characterization, Sampling and Analysis

Structure Sample Total 70
Surface Sample Total 0
Subsurface Sample Total 0

	PRS	Outfall Field ID	PRS Type Outfall Type	Phase 1 Approach	Field Surveys			Samples				Field Screening						Field Lab.						Laboratory Analyses															Aggregate
					Land Survey	Geophysics	Radiation	Sampled Media	Structure	Surface	Subsurface	Gross Alpha	Gross Gamma/Beta	Organic Vapor	Combustible gas/oxygen	X-Ray Fluorescence	Lithologic Logging	Gross Alpha	Tritium	Soil Moisture	Gamma Spectroscopy	PCB	VOA	Gamma Spectroscopy	Isotopic Americium	Total Uranium	Isotopic Uranium	Isotopic Plutonium	Isotopic Thorium	Alkali Metals (Cs, Li)	VOA (SW 8240)	Semivolatiles (SW 8270)	TCLP	Metals (SW 6010)	PCB (SW 8080)	Asbestos	Mercury	Herbicides	Pesticides	
(1)	46-003-d		Septic System-WC	VCA-WC				Soil/Tuff	30	0	0	1	1	1		1								1		1							1			1				5.1
(2)	46-004-c		Dry Well-WC	VCA-WC				Soil/Tuff	10	0	0	1	1	1		1								1		1							1			1				5.1
(3)	46-004-d		Dry Well-WC	VCA-WC				Soil/Tuff	10	0	0	1	1	1		1								1		1	1	1	1	1			1			1				5.1
(4)	46-004-e		Dry Well-WC	VCA-WC				Soil/Tuff	10	0	0	1	1	1		1								1		1	1	1	1	1			1			1				5.1
(5)	46-004-p		Dry Well-WC	VCA-WC				Soil/Tuff	10	0	0	1	1	1		1								1		1							1			1				5.1

Table 5-2-5

Summary of OU 1140 TA-46 Lagoon Systems Site Surveys, Sampling and Analysis

Structure Sample Total 22
Surface Sample Total 6
Subsurface Sample Total 31

	PRS	Outfall Field ID	PRS Type Outfall Type	Phase 1 Approach	Field Surveys			Samples				Field Screening						Field Lab.						Laboratory Analyses																Aggregate
					Land Survey	Geophysics	Radiation	Sampled Media	Structure	Surface	Subsurface	Gross Alpha	Gross Gamma/Beta	Organic Vapor	Combustible gas/oxygen	X-Ray Fluorescence	Lithologic Logging	Gross Alpha	Tritium	Soil Moisture	Gamma Spectroscopy	PCB	VOA	Gamma Spectroscopy	Isotopic Americium	Total Uranium	Isotopic Uranium	Isotopic Plutonium	Isotopic Thorium	Alkali Metals (Cs, Li)	VOA (SW 8240)	Semivolatiles (SW 8270)	TCLP	Metals (SW 6010)	PCB (SW 8080)	Asbestos	Mercury	Herbicides	Pesticides	
(1)	46-002		Sewage lagoon	Reconn	1			Sludge/Sediment	2	0	0	1	1	1		1		1			1	1	1	1			1	1	1		1	1		1	1		1			5.2
(2)	46-002		Sand Filters	Reconn	1		1	Soil/Sediment	3	0	0	1	1	1		1		1			1	1	1	1			1	1	1		1	1		1	1		1			5.2
(3)	46-002		Sewage Lagoon	Reconn	1			Tuff /Corehole	0	0	31	1	1	1		1	1	1			1	1	1	1			1	1	1		1	1		1	1		1			5.2
(4)	46-002		Siphon Tank	Reconn	1			Sludge/Sediment	1	0	0	1	1	1		1		1			1	1	1	1			1	1	1		1	1		1	1		1			5.2
(5)	46-002		Lagoon Syst.	Reconn	1			Soil/Tuff	0	6	0	1	1			1		1			1	1		1			1	1	1			1		1	1		1			5.2
(6)	46-002		Lagoon Syst.	Reconn	1			Soil/Tuff	4	0	0	1	1			1		1			1	1		1			1	1	1			1		1	1		1			5.2
(7)	46-005		Fmr. Solar Ponds,	Reconn	1			Sludge/Sediment	4	0	0	1	1	1		1		1			1	1	1	1							1	1		1	1					5.2
(8)	46-005		Fmr. Solar Ponds,	Reconn	1			Soil/Tuff	8	0	0	1	1			1		1			1			1								1		1	1					5.2

Table 5-2-5

Summary of OU 1140 TA-46 Lagoon Systems Waste Characterization, Sampling and Analysis

Structure Sample Total 20
Surface Sample Total 0
Subsurface Sample Total 0

	PRS	Outfall Field ID	PRS Type Outfall Type	Phase 1 Approach	Field Surveys			Samples				Field Screening						Field Lab.						Laboratory Analyses																
					Land Survey	Geophysics	Radiation	Sampled Media	Structure	Surface	Subsurface	Gross Alpha	Gross Gamma/Beta	Organic Vapor	Combustible gas/oxygen	X-Ray Fluorescence	Lithologic Logging	Gross Alpha	Tritium	Soil Moisture	Gamma Spectroscopy	PCB	VOA	Gamma Spectroscopy	Isotopic Americium	Total Uranium	Isotopic Uranium	Isotopic Plutonium	Isotopic Thorium	Alkali Metals (Cs, Li)	VOA (SW 8240)	Semivolatiles (SW 8270)	TCLP	Metals (SW 6010)	PCB (SW 8080)	Asbestos	Mercury	Herbicides	Pesticides	Aggregate
(1)	46-002		Sewage Lagoon Liner	VCA-WC				Sludge	10	0	0	1	1	1										1		1							1				1			5.2
(2)	46-005		Sewage Lagoon Liner	VCA-WC				Sludge	10	0	0	1	1	1										1		1							1							5.2

Table 5-3-8

Summary of OU 1140 TA-46 Surface Releases Site Surveys, Sampling and Analysis

Structure Sample Total 0
Surface Sample Total 31
Subsurface Sample Total 18

	PRS	Outfall Field ID	PRS Type Outfall Type	Phase 1 Approach	Field Surveys			Samples				Field Screening						Field Lab.						Laboratory Analyses																	
					Land Survey	Geophysics	Radiation	Sampled Media	Structure	Surface	Subsurface	Gross Alpha	Gross Gamma/Beta	Organic Vapor	Combustible gas/oxygen	X-Ray Fluorescence	Lithologic Logging	Gross Alpha	Tritium	Soil Moisture	Gamma Spectroscopy	PCB	VOA	Gamma Spectroscopy	Isotopic Americium	Total Uranium	Isotopic Uranium	Isotopic Plutonium	Isotopic Thorium	Alkali Metals (Cs, Li)	VOA (SW 8240)	Semivolatiles (SW 8270)	TCLP	Metals (SW 6010)	PCB (SW 8080)	Asbestos	Mercury	Herbicides	Pesticides	Aggregate
(1)	46-003-f		Sand filter	Reconn	1		1	Soil	0	3	0	1	1	1		1	1	1			1	1	1	1			1				1	1		1	1		1			5.3
(2)	46-003-h	GG	Sink Drain	Reconn	1			Soil	0	3	0	1	1	1		1							1								1	1		1						5.3
(3)	46-006-a		Drum Storage	Reconn	1			Soil	0	0	6	1	1	1		1		1			1	1	1	1	1		1				1	1		1	1				1	5.3
(4)	46-006-b		General Storage	Reconn	1			Soil/Paving	0	0	1	1	1			1		1			1	1		1			1					1		1	1					5.3
(5)	46-006-c		Drum Storage	Reconn	1			Soil	0	2	0	1	1			1						1										1		1	1					5.3
(6)	46-006-d		Surface Disposal	Reconn	1			Soil	0	5	0	1	1	1		1		1			1	1	1	1			1	1			1	1		1	1		1			5.3
(7)	46-006-f		General Storage	Reconn	1			Soil	0	3	0	1	1	1		1		1			1	1	1	1			1				1	1		1	1	1	1			5.3
(8)	46-006-g		Surface Release	Reconn	1			Paving	0	0	2	1	1	1				1			1		1	1			1				1	1								5.3
(9)	46-007		Surface Disposal	Reconn	1			Soil	0	2	0	1	1	1		1		1			1		1	1			1			1	1	1		1†			1			5.3
(10)	46-008-a		Drum Storage	Reconn	1			Soil	0	2	0	1	1			1																1		1						5.3
(11)	46-008-b		Drum Storage	Reconn	1			Soil	0	2	0	1	1									1										1			1					5.3
(12)	46-008-d		Drum Storage	Reconn	1			Soil	0	2	0	1	1	1		1		1			1	1	1	1			1				1	1		1	1		1			5.3
(13)	46-008-e		Drum Storage	Reconn	1			Soil	0	4	0	1	1	1		1		1					1	1			1				1	1		1	1					5.3
(14)	46-008-f		Drum Storage	Reconn	1			Soil	0	1	0	1	1	1		1		1			1		1	1			1				1	1		1						5.3
(15)	46-008-g		Drum Storage	Reconn	1			Soil	0	0	9	1	1	1								1	1								1	1			1					5.3
(16)	46-010-d		General Storage	Reconn	1			Soil	0	2	0	1	1	1		1						1	1								1	1		1	1	1				5.3

Table 5-4-9

Summary of OU 1140 TA-46 Outfalls Site Surveys, Sampling and Analysis

Structure Sample Total 0
Surface Sample Total 2
Subsurface Sample Total 420

	PRS	Outfall Field ID	PRS Type Outfall Type	Phase 1 Approach	Field Surveys: Land Survey	Field Surveys: Geophysics	Field Surveys: Radiation	Samples: Sampled Media	Samples: Structure	Samples: Surface	Samples: Subsurface	Field Screening: Gross Alpha	Field Screening: Gross Gamma/Beta	Field Screening: Organic Vapor	Field Screening: Combustible gas/oxygen	Field Screening: X-Ray Fluorescence	Field Screening: Lithologic Logging	Field Lab.: Gross Alpha	Field Lab.: Tritium	Field Lab.: Soil Moisture	Field Lab.: Gamma Spectroscopy	Field Lab.: PCB	Field Lab.: VOA	Laboratory Analyses: Gamma Spectroscopy	Laboratory Analyses: Isotopic Americium	Laboratory Analyses: Total Uranium	Laboratory Analyses: Isotopic Uranium	Laboratory Analyses: Isotopic Plutonium	Laboratory Analyses: Isotopic Thorium	Laboratory Analyses: Alkali Metals (Cs, Li)	Laboratory Analyses: VOA (SW 8240)	Laboratory Analyses: Semivolatiles (SW 8270)	Laboratory Analyses: TCLP	Laboratory Analyses: Metals (SW 6010)	Laboratory Analyses: PCB (SW 8080)	Laboratory Analyses: Asbestos	Laboratory Analyses: Mercury	Laboratory Analyses: Herbicides	Laboratory Analyses: Pesticides	Aggregate
(1)		C	Outfall-pipe	Reconn	1			Sediments	0	0	6	1	1	1		1	1	1			1	1	1	1			1		1		1	1		1						5.4
(2)		I	Outfall-pipe	Reconn	1			Sediments	0	0	18	1	1	1		1	1	1			1	1	1	1			1		1		1	1		1						5.4
(3)		M	Outfall-pipe	Reconn	1			Sediments	0	0	6	1	1	1		1	1	1			1	1	1	1			1		1		1	1		1						5.4
(4)		P	Outfall-pipe	Reconn	1			Sediments	0	0	24	1	1	1		1	1	1			1	1	1	1			1		1		1	1		1						5.4
(5)		Q	Outfall-pipe	Reconn	1			Sediments	0	0	6	1	1	1		1	1	1			1	1	1	1			1		1		1	1		1						5.4
(6)		BB	Outfall-pipe	Reconn	1			Sediments	0	0	6	1	1	1		1	1	1			1	1	1	1			1		1		1	1		1			1			5.4
(7)		NN	Outfall-pipe	Reconn	1			Sediments	0	0	9	1	1	1		1	1	1			1	1	1	1			1		1		1	1		1			1			5.4
(8)		OO	Outfall-pipe	Reconn	1			Sediments	0	0	6	1	1	1		1	1	1			1	1	1	1			1				1	1		1						5.4
(9)		PP	Outfall-pipe	Reconn	1			Sediments	0	0	6	1	1	1		1	1	1			1		1	1			1		1		1	1		1	1					5.4
(10)		QQ	Outfall-pipe	Reconn	1			Sediments	0	0	6	1	1	1		1	1	1			1	1	1	1			1		1		1	1		1	1					5.4
(11)		RR	Outfall-pipe	Reconn	1			Sediments	0	0	6	1	1	1		1	1	1			1	1	1	1			1		1		1	1		1						5.4
(12)		TT	Outfall-pipe	Reconn	1			Sediments	0	0	6	1	1	1		1	1	1			1	1	1	1			1		1		1	1		1	1					5.4
(13)		ZZ	Outfall-pipe	Reconn	1			Sediments	0	0	6	1	1	1		1	1	1			1	1	1	1			1		1		1	1		1						5.4
(14)		AB	Outfall-pipe	Reconn	1			Sediments	0	0	6	1	1	1		1	1	1			1	1	1	1			1		1		1	1		1						5.4
(15)		AE	Outfall-surface	Reconn	1			Sediments	0	0	6	1	1	1		1	1	1			1	1	1	1			1		1		1	1		1						5.4
(16)		AF	Outfall-surface	Reconn	1			Sediments	0	0	6	1	1	1		1	1	1			1	1	1	1			1		1		1	1		1						5.4
(17)		AG	Outfall-surface	Reconn	1			Sediments	0	0	6	1	1	1		1	1	1			1	1	1	1			1	1	1		1	1		1			1			5.4
(18)		AH	Outfall-surface	Reconn	1			Sediments	0	0	6	1	1	1		1	1	1			1	1	1	1			1	1	1		1	1		1			1			5.4
(19)		AI	Outfall-surface	Reconn	1			Sediments	0	0	6	1	1	1		1	1	1			1	1	1	1			1	1	1		1	1		1			1			5.4
(20)		AL	Outfall-surface	Reconn	1			Sediments	0	0	6	1	1	1		1	1	1			1	1	1	1			1		1		1	1		1						5.4
(21)		AN	Outfall-surface	Reconn	1			Sediments	0	0	3	1	1	1		1	1	1			1	1	1	1			1		1		1	1		1						5.4
(22)	46-002	II JJ	Outfall-pipe	Reconn	1			Sediments	0	0	30	1	1	1		1	1	1			1	1	1	1			1	1	1		1∞	1		1	1		1			5.4
(23)	46-003-a	HH	Outfall-pipe	Reconn	1			Sediments	0	0	21	1	1	1		1	1	1			1		1	1			1		1		1∞	1		1			1			5.4
(24)	46-003-f	FF	Outfall-pipe	Reconn	1			Sediments	0	0	18	1	1	1		1	1	1			1	1	1	1			1				1∞	1		1	1		1			5.4
(25)	46-003-g	KK	Outfall-pipe	Reconn	1			Sediments	0	0	27	1	1	1		1	1	1			1	1	1	1							1∞	1		1	1					5.4
(26)	46-004-a2	MM	Outfall-pipe	Reconn	1			Sediments	0	0	9	1	1	1		1	1	1			1	1	1	1			1		1		1∞	1		1	1		1			5.4
(27)	46-004-b2	U	Outfall-pipe	Reconn	1			Sediments	0	0	12	1	1	1		1	1	1			1		1	1			1		1		1∞	1		1			1			5.4
(28)	46-004-c2	S	Outfall-pipe	Reconn	1			Sediments	0	0	9	1	1	1		1	1	1			1		1	1			1		1		1∞	1		1			1			5.4
(29)	46-004-f	Y	Outfall-pipe	Reconn	1			Sludge/Sediments	0	1	0	1	1	1		1		1			1	1	1	1			1				1	1		1	1		1			5.4
(30)	46-004-g	N	Outfall-Surface	Reconn	1			Sediments	0	0	24	1	1	1		1	1	1			1		1	1			1		1		1∞	1		1			1			5.4
(31)	46-004-h	A	Outfall-pipe	Reconn	1			Sediments	0	0	9	1	1	1		1	1	1			1		1	1			1		1		1∞	1		1						5.4
(32)	46-004-m	CC	Outfall-pipe	Reconn	1			Sediments	0	0	9	1	1	1		1	1	1			1		1	1			1				1	1		1			1			5.4
(33)	46-004-q	B	Outfall-pipe	Reconn	1			Sediments	0	0	3	1	1	1		1	1	1			1		1	1			1				1∞	1		1						5.4
(34)	46-004-r	Z	Outfall-pipe	Reconn	1			Sediments	0	0	0	1	1	1		1		1				1	1			1				1	1		1	1		1			5.4
(35)	46-004-s	X	Outfall-pipes	Reconn	1			Sediments	0	0	9	1	1	1		1	1	1			1	1	1	1			1				1∞	1		1	1		1			5.4
(36)	46-004-t	YY	Outfall-pipe	Reconn	1			Sediments	0	0	3	1	1	1			1				1		1	1							1									5.4
(37)	46-004-u	F	Outfall-pipe	Reconn	1			Sediments	0	0	3	1	1	1		1	1						1								1∞	1		1						5.4
(38)	46-004-v	G	Outfall-pipe	Reconn	1			Sediments	0	0	3	1	1				1															1								5.4

Table 5-4-9

Summary of OU 1140 TA-46 Outfalls Site Surveys, Sampling and Analysis

Structure Sample Total 0
Surface Sample Total 2
Subsurface Sample Total 420

	PRS	Outfall Field ID	PRS Type Outfall Type	Phase 1 Approach	Field Surveys			Samples				Field Screening						Field Lab.						Laboratory Analyses															
					Land Survey	Geophysics	Radiation	Sampled Media	Structure	Surface	Subsurface	Gross Alpha	Gross Gamma/Beta	Organic Vapor	Combustible gas/oxygen	X-Ray Fluorescence	Lithologic Logging	Gross Alpha	Tritium	Soil Moisture	Gamma Spectroscopy	PCB	VOA	Gamma Spectroscopy	Isotopic Americium	Total Uranium	Isotopic Uranium	Isotopic Plutonium	Isotopic Thorium	Alkali Metals (Cs, Li)	VOA (SW 8240)	Semivolatiles (SW 8270)	TCLP	Metals (SW 6010)	PCB (SW 8080)	Asbestos	Mercury	Herbicides	Pesticides	Aggregate
(39)	46-004-w	AA	Outfall-pipe	Reconn	1			Sediments	0	1	0	1	1	1								1	1								1	1			1					5.4
(40)	46-004-x	J	Outfall-pipe	Reconn	1			Sediments	0	0	21	1	1	1		1	1	1			1	1	1	1			1		1		1∞	1		1	1		1			5.4
(41)	46-004-y	K	Outfall-pipe	Reconn	1			Sediments	0	0	15	1	1	1		1	1	1			1	1	1	1			1		1		1∞	1		1	1		1			5.4
(42)	46-004-z	L	Outfall-pipe	Reconn	1			Sediments	0	0	24	1	1	1		1	1	1			1	1	1	1			1		1		1∞	1		1	1		1			5.4
(43)	46-005	LL	Outfall-surface	Reconn	1			Sediments	0	0	15	1	1	1		1	1	1			1	1	1	1							1∞	1		1	1					5.4
(44)	46-aoc-001		Mercury Spill	Reconn																																	1			5.4

Table 5-5-6

Summary of OU 1140 TA-46 Landfills Site Surveys, Sampling and Analysis

Structure Sample Total 0
Surface Sample Total 0
Subsurface Sample Total 69

Drill Rig	PRS	Outfall Field ID	PRS Type Outfall Type	Phase 1 Approach	Field Surveys			Samples				Field Screening						Field Lab.						Laboratory Analyses																	
					Land Survey	Geophysics	Radiation	Sampled Media	Structure	Surface	Subsurface	Gross Alpha	Gross Gamma/Beta	Organic Vapor	Combustible gas/oxygen	X-Ray Fluorescence	Lithologic Logging	Gross Alpha	Tritium	Soil Moisture	Gamma Spectroscopy	PCB	VOA	Gamma Spectroscopy	Isotopic Americium	Total Uranium	Isotopic Uranium	Isotopic Plutonium	Isotopic Thorium	Alkali Metals (Cs, Li)	VOA (SW 8240)	Semivolatiles (SW 8270)	TCLP	Metals (SW 6010)	PCB (SW 8080)	Asbestos	Mercury	Herbicides	Pesticides	Aggregate
(1)	46-009-a		Landfill	Reconn	1			Soil/Debris	0	0	30	1	1	1		1	1	1			1	1	1	1			1	1	1		1	1		1	1	1				5.5
(2)	46-009-a		Landfill	Reconn	1			Soil/Debris	0	0	9	1	1	1		1	1	1			1	1	1	1			1	1	1		1	1		1	1	1				5.5
(3)	46-009-a		Landfill	Reconn	1			Sediment/Soil	0	0	6	1	1	1		1	1	1			1	1	1	1			1	1	1		1	1		1	1	1				5.5
(4)	46-009-b		Landfill	Reconn	1			Soil/Debris	0	0	12	1	1	1		1	1	1			1	1	1	1			1	1	1		1	1		1	1	1				5.5
(5)	46-009-b		Landfill	Reconn	1			Soil/Debris	0	0	12	1	1	1		1	1	1			1	1	1	1			1	1	1		1	1		1	1	1				5.5

Table 5-6-5

Summary of OU 1140 TA-46 Stack Emissions Site Surveys, Sampling and Analysis

Structure Sample Total 0
Surface Sample Total 7
Subsurface Sample Total 0

					Field Surveys			Samples				Field Screening						Field Lab.						Laboratory Analyses															
	PRS	Outfall Field ID	PRS Type Outfall Type	Phase 1 Approach	Land Survey	Geophysics	Radiation	Sampled Media	Structure	Surface	Subsurface	Gross Alpha	Gross Gamma/Beta	Organic Vapor	Combustible gas/oxygen	X-Ray Fluorescence	Lithologic Logging	Gross Alpha	Tritium	Soil Moisture	Gamma Spectroscopy	PCB	VOA	Gamma Spectroscopy	Isotopic Americium	Total Uranium	Isotopic Uranium	Isotopic Plutonium	Isotopic Thorium	Alkali Metals (Cs, Li)	VOA (SW 8240)	Semivolatiles (SW 8270)	TCLP	Metals (SW 6010)	PCB (SW 8080)	Asbestos	Mercury	Herbicides	Pesticides	Aggregate
(1)	Agg 5.6		Stack Emission	Reconn	1			Soil	0	2	0	1	1								1			1			1		1					1						5.6
(2)	Agg 5.6		Stack Emission	Reconn	1			Soil/Sediment	0	2	0	1	1					1			1			1			1		1					1						5.6
(3)	Agg 5.6		Stack Emission	Reconn	1			Soil	0	3	0	1	1					1			1			1			1		1					1						5.6

Table E-1
OU 1140 PRS Specific Site Survey and Sampling Summary

	PRS	PRS/ Samp. Group	Outfall Field ID	SWMU/Outfall Type, Sample Notes	Phase 1 Approach	Field Surveys: Land Survey	Field Surveys: Geophysics	Field Surveys: Radiation	Sampling-Group Information: Sampled Media	Structure	Surface	Subsurface	Sample Type	Sample Location I. D.	Samples Per Location	Number of Samples	Sample dup	Aggregate
(1)	46-002			Sewage Lagoon Liner	VCA-WC				Sludge	10			WC		1	10		5.2
	Samples from excavated material.																	
(2)	46-002	46-002-1	II JJ	Outfall-pipe	Reconn	1			Sediments			10	H	H-133 H-134 H-135 H-136 H-137 H-138 H-139 H-140 H-141 H-142	3	30		5.4
	10 hand-augered sample holes x (3) specimens																	
(3)	46-002	46-002-2		Sewage lagoon	Reconn	1			Sludge/Sediment	2			SS	SS-8 SS-9	1	2		5.2
	Two Sludge samples from center of lagoon.																	
(4)	46-002	46-002-3		Sand Filters	Reconn	1		1	Soil/Sediment	3			SU	S-77 S-78 S-79	1	3		5.2
	Three surface samples from three sections of sand filter.																	

Sampling Totals for PRS: 46-002

Total Sample Locations: 37

Total Number Of Samples: 87

Table E-1
OU 1140 PRS Specific Site Survey and Sampling Summary

	PRS	PRS/ Samp. Group	Outfall Field ID	SWMU/Outfall Type, Sample Notes	Phase 1 Approach	Field Surveys: Land Survey	Geophysics	Radiation	Sampling-Group Information: Sampled Media	Structure	Surface	Subsurface	Sample Type	Sample Location I. D.	Samples Per Location	Number of Samples	Sample dup	Aggregate
(5)	46-002	46-002-4		Lagoon Syst. Perimeter	Reconn	1			Soil/Tuff		6		SU	S-57 S-58 S-60 S-64 S-65 S-66	1	6		5.2
	Six surface soil samples from perimenter of sand filters.																	
(6)	46-002	46-002-5		Sewage Lagoon	Reconn	1			Tuff /Corehole			1	SAB	SAB-1 SAB-1a	31	31		5.2
	150 ft shallow angle borehole (1 specimen / 5 ft run, and one at TD)																	
(7)	46-002	46-002-6		Siphon Tank	Reconn	1			Sludge/Sediment	1			SS	SS-11	1	1		5.2
	One sludge sample from center of siphon tank.																	
(8)	46-002	46-002-7		Lagoon Syst. Perimeter	Reconn	1			Soil/Tuff	4			SU	S-53 S-54 S-55 S-56	1	4		5.2
	Four surface soil samples into exposed surface beineath removed lagoon liner.																	

Sampling Totals for PRS: 46-002

Total Sample Locations	37
Total Number Of Samples	87

Table E-1
OU 1140 PRS Specific Site Survey and Sampling Summary

	PRS	PRS/ Samp. Group	Outfall Field ID	SWMU/Outfall Type, Sample Notes	Phase 1 Approach	Field Surveys: Land Survey	Field Surveys: Geophysics	Field Surveys: Radiation	Sampling-Group Information: Sampled Media	Structure	Surface	Subsurface	Sample Type	Sample Location I. D.	Samples Per Location	Number of Samples	Sample dup	Aggregate
(1)	46-003-a	46-003-a-1	HH	Outfall-pipe	Reconn	1			Sediments			7	H	H-103 H-104 H-105 H-106 H-107 H-108 H-109	3	21		5.4
	7 hand-augered sample hole x (3) specimens.																	
(2)	46-003-a	46-003-a-2		Septic Sys./Tank	Reconn	1	1		Sludge/Tuff	1			V	V-26	3	3		5.1
	One borehole thru center of tank (TA-46-8) collect continuous core in 5 ft runs to 15 ft TD. One VOA per 5 ft, one homogenized sample per 5 ft for metals, rad, semi-VOA.																	
(3)	46-003-a	46-003-a-3		Septic Sys./Manhole	Reconn	1	1		Sludge/ Sediment	2			SS	SS-3 SS-14	1	2		5.1
	Collect two 500 ml sludge/sediment samples from opposite sides of interior of manhole (TA-46-6).																	
(4)	46-003-a	46-003-a-4		Septic Sys./Dist. Box	Reconn	1	1		Sludge/Tuff	1			V	V-29	3	3		5.1
	One borehole thru center of box (TA-46-9) collect continuous core in 5 ft runs to 15 ft TD. One VOA per 5 ft, one homogenized sample per 5 ft for metals, rad, semi-VOA.																	

Sampling Totals for PRS: 46-003-a

Total Sample Locations: 16

Total Number Of Samples: 44

Table E-1
OU 1140 PRS Specific Site Survey and Sampling Summary

	PRS	PRS/ Samp. Group	Outfall Field ID	SWMU/Outfall Type, Sample Notes	Phase 1 Approach	Field Surveys: Land Survey	Field Surveys: Geophysics	Field Surveys: Radiation	Sampling-Group Information: Sampled Media	Structure	Surface	Subsurface		Sample Type	Sample Location I. D.	Samples Per Location	Number of Samples	Sample dup	Aggregate
(5)	46-003-a	46-003-a-5		Septic Sys./Dist. Box	Reconn	1	1		Sludge/Tuff	1				V	V-32	3	3		5.1
	One borehole thru center of box (TA-46-10) collect continuous core in 5 ft runs to 15 ft TD. One VOA per 5 ft, one homogenized sample per 5 ft for metals, rad, semi-VOA.																		
(6)	46-003-a	46-003-a-6		Septic Drain field	Reconn	1	1		Soil/Tuff			4		V	V-28 V-30 V-31 V-33	3	12		5.1
	Four boreholes into drain field branches, collect continuous core in 5 ft runs to 15 ft TD. One VOA per 5 ft, one homogenized sample per 5 ft for metals, rad, semi-VOA.																		

Sampling Totals for PRS: 46-003-a

Total Sample Locations	16
Total Number Of Samples	44

Table E-1
OU 1140 PRS Specific Site Survey and Sampling Summary

	PRS	PRS/ Samp. Group	Outfall Field ID	SWMU/Outfall Type, Sample Notes	Phase 1 Approach	Field Surveys: Land Survey	Field Surveys: Geophysics	Field Surveys: Radiation	Sampling-Group Information: Sampled Media	Structure	Surface	Subsurface	Sample Type	Sample Location I. D.	Samples Per Location	Number of Samples	Sample dup	Aggregate
(1)	46-003-d			Septic System-WC	VCA-WC				Soil/Tuff	30			WC		1	30		5.1
	Samples from excavated material and structure(s).																	
(2)	46-003-d	46-003-d-1		Septic Sys./Tank	VCA	1	1	1	Soil/Tuff		4		SU	S-21 S-23 S-80 S-81	1	4		5.1
	Two surface samples beneath septic tank, one bebeath distribution box, one adjacent to tank-box drainline.																	
(3)	46-003-d	46-003-d-2		Septic Drain field	VCA	1	1	1	Soil/Tuff		5		SU	S-18 S-19 S-20 S-22 S-24	1	5		5.1
	Five surface soil samples at drain field excavation.																	

Sampling Totals for PRS: 46-003-d

Total Sample Locations: 39

Total Number Of Samples: 39

Table E-1
OU 1140 PRS Specific Site Survey and Sampling Summary

	PRS	PRS/ Samp. Group	Outfall Field ID	SWMU/Outfall Type, Sample Notes	Phase 1 Approach	Field Surveys: Land Survey	Field Surveys: Geophysics	Field Surveys: Radiation	Sampling-Group Information: Sampled Media	Structure	Surface	Subsurface	Sample Type	Sample Location I. D.	Samples Per Location	Number of Samples	Sample dup	Aggregate
(1)	46-003-f	46-003-f-1	FF	Outfall-pipe	Reconn	1			Sediments			6	H	H-117 H-118 H-119 H-120 H-121 H-122	3	18		5.4
				6 hand-augered sample hole x (3)specimens .														
(2)	46-003-f	46-003-f-2		Septic Sys./Tank	Reconn	1	1		Sludge/Tuff	1			V	V-45	3	3		5.1
				One borehole thru center of tank (TA-46-94) collect continuous core in 5 ft runs to 15 ft TD. One VOA per 5 ft, one homogenized sample per 5 ft for metals, rad, semi-VOA.														
(3)	46-003-f	46-003-f-3		Septic Sys./Manhole	Reconn	1	1		Sludge/Tuff	1			V	V-50	3	3		5.1
				One borehole thru center of manhole (TA-46-95) collect continuous core in 5 ft runs to 15 ft TD. One VOA per 5 ft, one homogenized sample per 5 ft for metals, rad, semi-VOA														
(4)	46-003-f	46-003-f-4		Septic Sys./Dist. Box	Reconn	1	1		Sludge/Tuff	1			V	V-52	3	3		5.1
				One borehole thru center of distribution box (TA-46-97)collect continuous core in 5 ft runs to 15 ft TD. One VOA per 5 ft, one homogenized sample per 5 ft for metals, rad, semi-VOA.														

Sampling Totals for PRS: 46-003-f

Total Sample Locations	15
Total Number Of Samples	36

Table E-1
OU 1140 PRS Specific Site Survey and Sampling Summary

	PRS	PRS/ Samp. Group	Outfall Field ID	SWMU/Outfall Type, Sample Notes	Phase 1 Approach	Field Surveys: Land Survey	Field Surveys: Geophysics	Field Surveys: Radiation	Sampling-Group Information: Sampled Media	Structure	Surface	Subsurface	Sample Type	Sample Location I. D.	Samples Per Location	Number of Samples	Sample dup	Aggregate
(5)	46-003-f	46-003-f-5		Sand filter	Reconn	1			Soil/Tuff			3	V	V-21 V-22 V-24	2	6		5.1
				Three boreholes to 5 ft into tuff, one specimen from highest field screening reading one from TD.														
(6)	46-003-f	46-003-f-6		Sand filter	Reconn	1		1	Soil		3		SU	S-71 S-72 S-73	1	3		5.3
				Three surface soil samples, locations based upon field screening.														

Sampling Totals for PRS: 46-003-f

Total Sample Locations: 15

Total Number Of Samples: 36

Table E-1
OU 1140 PRS Specific Site Survey and Sampling Summary

	PRS	PRS/ Samp. Group	Outfall Field ID	SWMU/Outfall Type, Sample Notes	Phase 1 Approach	Field Surveys: Land Survey	Field Surveys: Geophysics	Field Surveys: Radiation	Sampling-Group Information: Sampled Media	Structure	Surface	Subsurface	Sample Type	Sample Location I. D.	Samples Per Location	Number of Samples	Sample dup	Aggregate
(1)	46-007	46-007-1		Surface Disposal	Reconn	1			Soil		2		SU	S-14 S-15	1	2		5.3

Two surface soil samples, 0 to 6 in. in ditch south of TA-46-1.

Sampling Totals for PRS: 46-007

Total Sample Locations: 2

Total Number Of Samples: 2

Table E-1
OU 1140 PRS Specific Site Survey and Sampling Summary

	PRS	PRS/ Samp. Group	Outfall Field ID	SWMU/Outfall Type, Sample Notes	Phase 1 Approach	Field Surveys: Land Survey	Field Surveys: Geophysics	Field Surveys: Radiation	Sampling-Group Information: Sampled Media	Structure	Surface	Subsurface	Sample Type	Sample Location I. D.	Samples Per Location	Number of Samples	Sample dup	Aggregate
(1)	46-009-a	46-009-a-1		Landfill	Reconn	1			Soil/Debris	☐	☐	5	V	V-16 V-18 V-19 V-20 V-15	6	30		5.5
	Six boreholes, assume 25 ft deep, 6 specimens per hole. (V-17 eliminated, overlap with V-31)																	
(2)	46-009-a	46-009-a-2		Landfill	Reconn	1			Soil/Debris	☐	☐	3	H	H-95 H-125 H-168	3	9		5.5
	Four hand augered holes, assume 3 specimens per hole. (H-167 eliminated, overlap with H-108)																	
(3)	46-009-a	46-009-a-3		Landfill	Reconn	1			Sediment/Soil	☐	☐	2	H	H-165 H-166	3	6		5.5
	Two hand augered holes, assume 3 specimens per hole.																	

Sampling Totals for PRS: 46-009-a

Total Sample Locations	10
Total Number Of Samples	45

Attachment 4

Figures

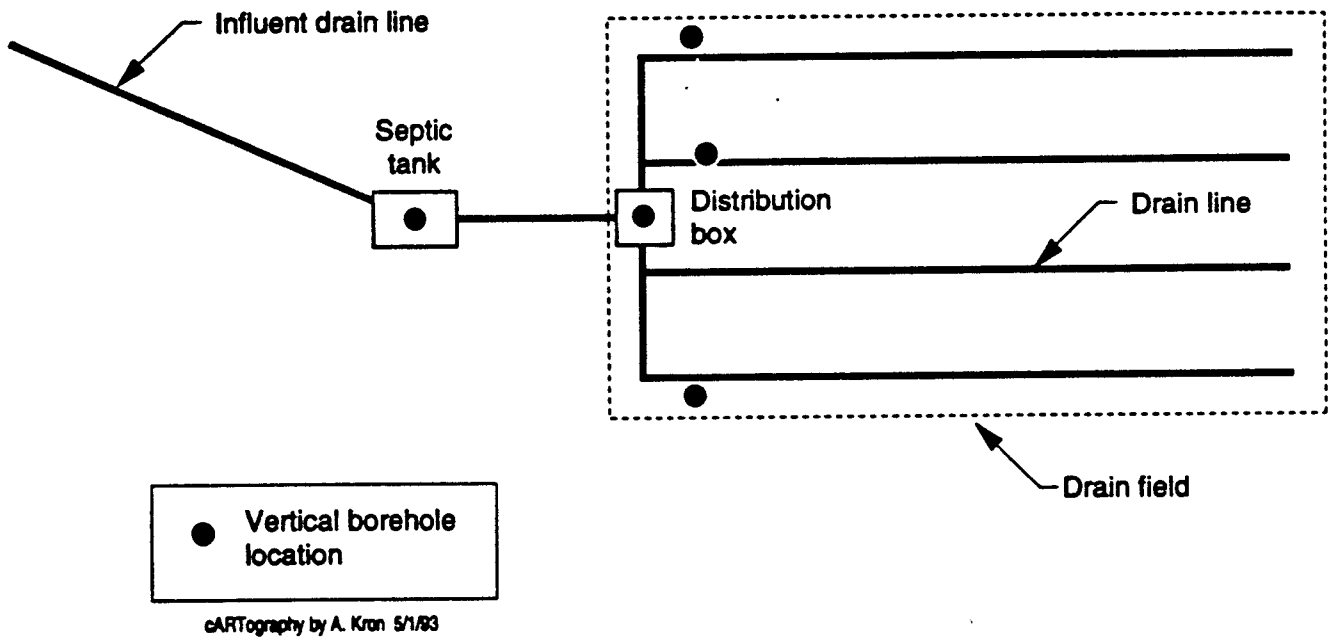

Fig. 5-1-6. Typical TA-46 septic system and sampling procedure.

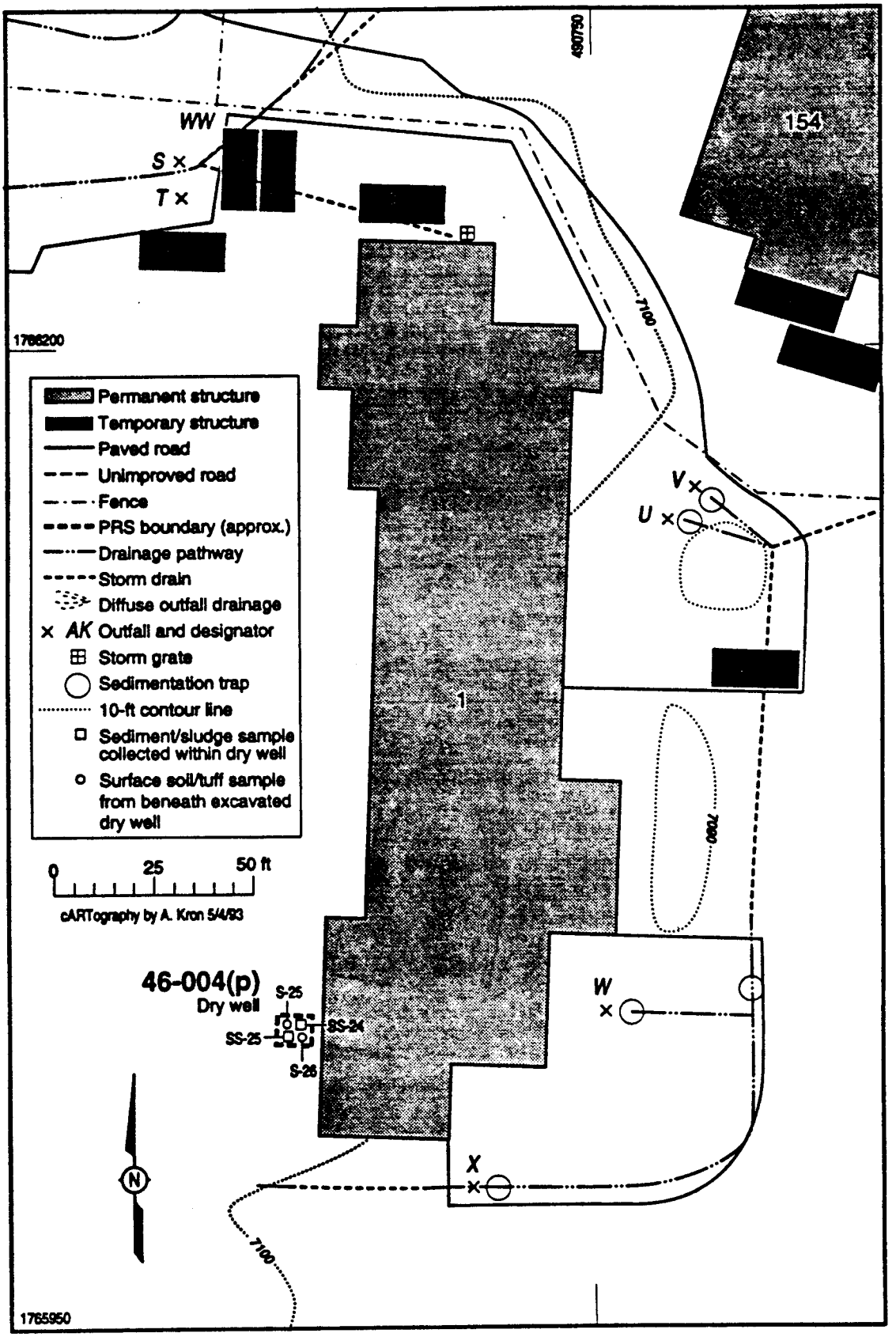

Fig. 5-1-16. Sampling locations at PRS 46-004(p).

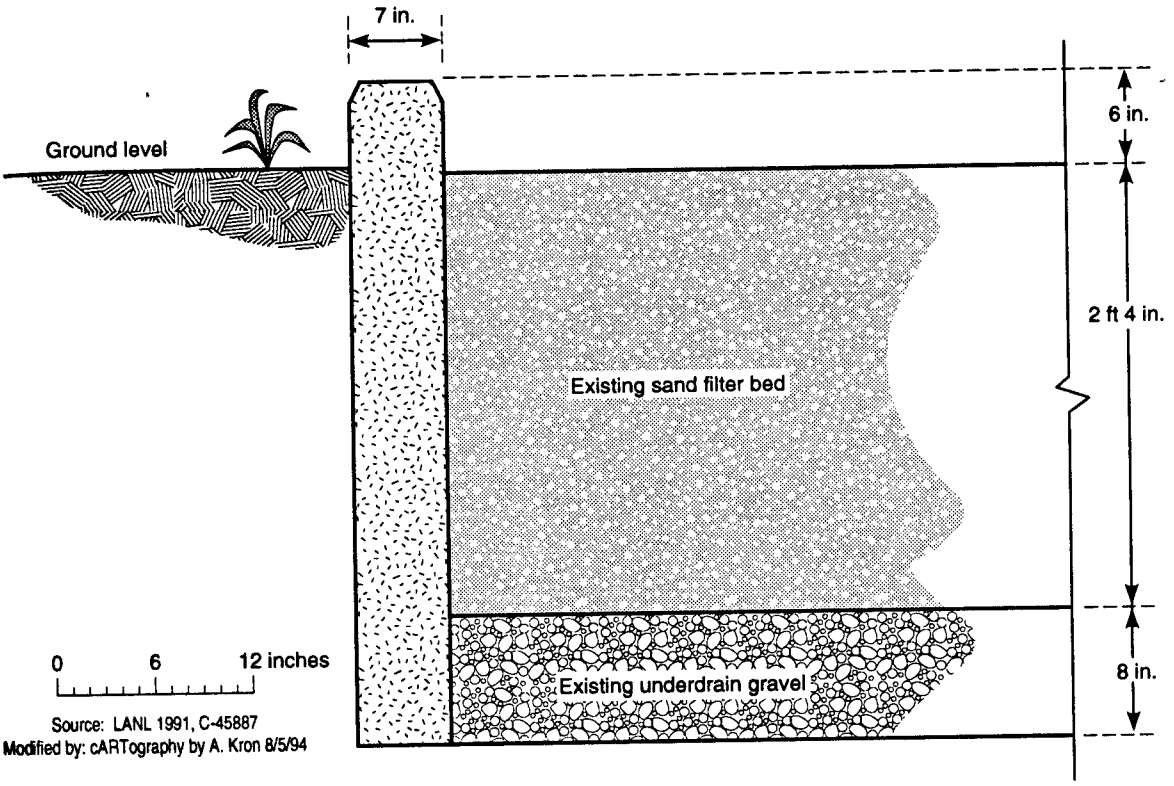

Fig. Cross section of sand filters for PRS 46-002.

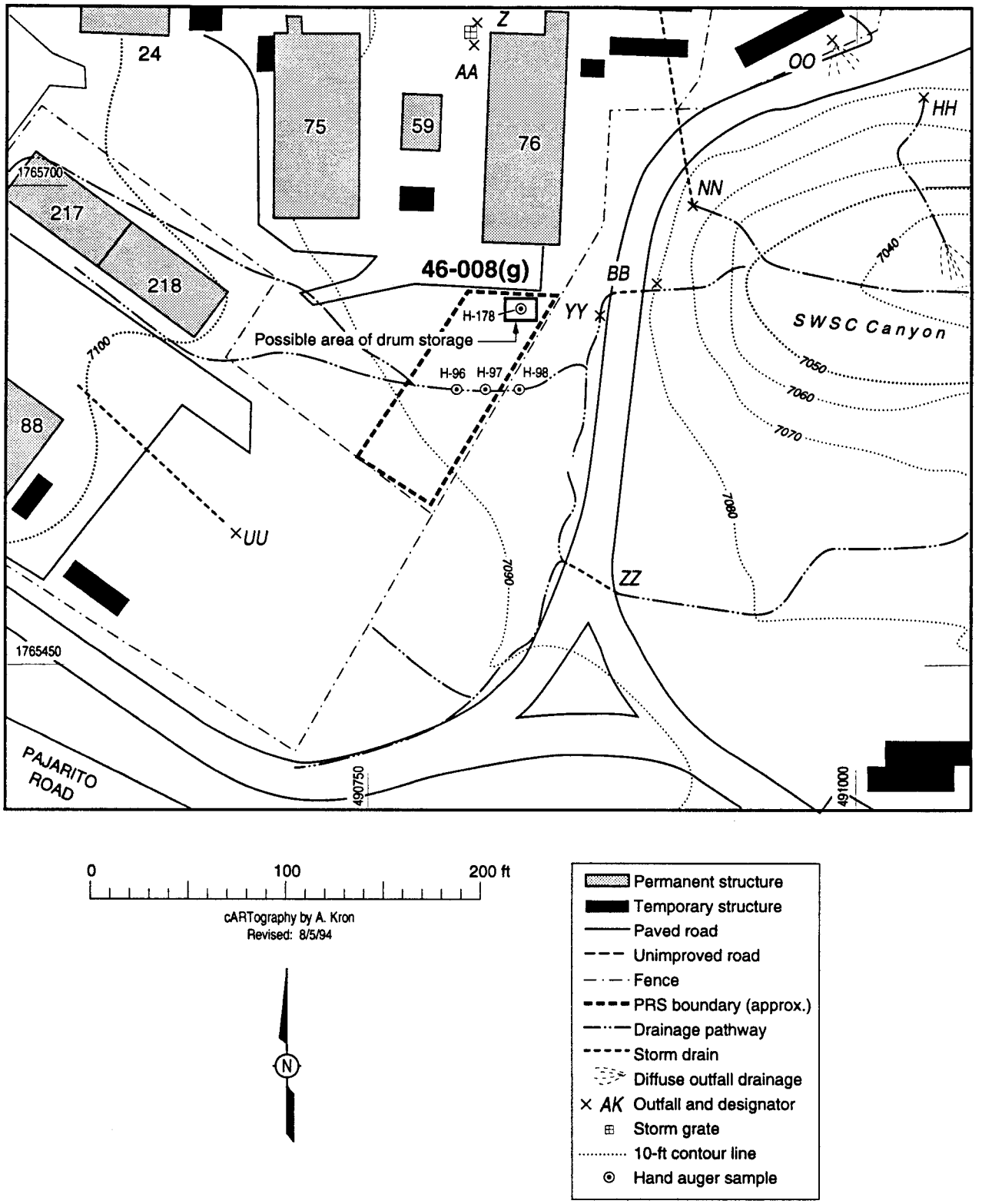

Fig. 5-3-7. Sampling locations at PRS 46-008(g).

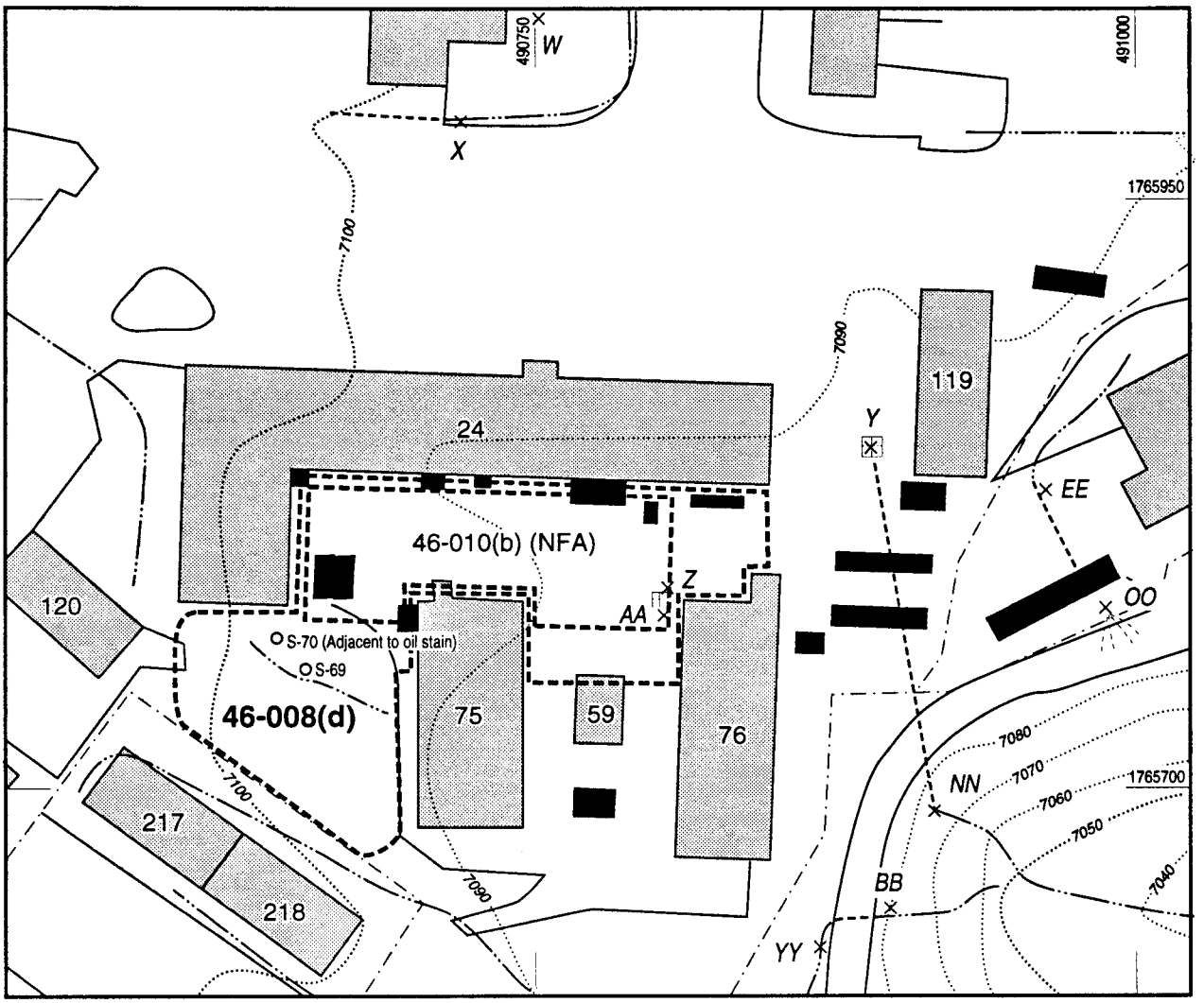

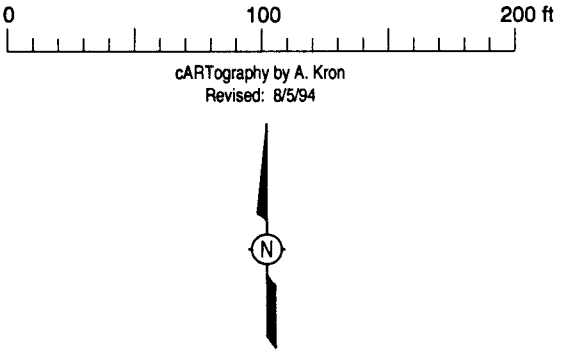

- Permanent structure
- Temporary structure
- Paved road
- Unimproved road
- Fence
- PRS boundary (approx.)
- Drainage pathway
- Storm drain
- Diffuse outfall drainage
- × AK Outfall and designator
- Storm grate
- 10-ft contour line
- Surface soil sample

Fig. 5-3-18. Sampling locations at PRS 46-008(d).

Table E-3
OU 1140 PRS Sample Locations Summary

	PRS ID 46-002 Sample Locations
1	H-133
2	H-134
3	H-135
4	H-136
5	H-137
6	H-138
7	H-139
8	H-140
9	H-141
10	H-142
11	S-53
12	S-54
13	S-55
14	S-56
15	S-57
16	S-58
17	S-60
18	S-64
19	S-65
20	S-66
21	S-77
22	S-78
23	S-79
24	SAB-1
25	SS-8
26	SS-9
27	SS-11

Table E-3
OU 1140 PRS Sample Locations Summary

	PRS ID 46-003-a
	Sample Locations
1	H-103
2	H-104
3	H-105
4	H-106
5	H-107
6	H-108
7	H-109
8	SS-3
9	SS-14
10	V-26
11	V-28
12	V-29
13	V-30
14	V-31
15	V-32
16	V-33

Table E-3
OU 1140 PRS Sample Locations Summary

	PRS ID 46-003-f
	Sample Locations
1	H-117
2	H-118
3	H-119
4	H-120
5	H-121
6	H-122
7	H-165
8	H-166
9	S-71
10	S-72
11	S-73
12	V-21
13	V-22
14	V-24
15	V-45
16	V-50
17	V-52

Table E-3
OU 1140 PRS Sample Locations Summary

	PRS ID 46-007 Sample Locations
1	H-4
2	H-5
3	H-6
4	H-7
5	H-8
6	H-9
7	H-10
8	H-11
9	H-14
10	H-15
11	H-16
12	H-17
13	H-18
14	H-19
15	H-20
16	H-21
17	H-22
18	H-23
19	H-54
20	H-60
21	H-61
22	H-62
23	S-7
24	S-14
25	S-15

Table E-3
OU 1140 PRS Sample Locations Summary

	PRS ID 46-009-a Sample Locations
1	H-95
2	H-103
3	H-104
4	H-105
5	H-106
6	H-107
7	H-108
8	H-109
9	H-125
10	H-165
11	H-166
12	H-168
13	V-15
14	V-16
15	V-18
16	V-19
17	V-20
18	V-28
19	V-29
20	V-30
21	V-31
22	V-32
23	V-33

Table E-3
OU 1140 PRS Sample Locations Summary

	PRS ID Agg. 5.6 Sample Locations
1	H-4
2	H-5
3	H-6
4	H-7
5	H-8
6	H-9
7	H-10
8	H-11
9	H-12
10	H-13
11	H-14
12	H-15
13	H-16
14	H-17
15	H-18
16	H-19
17	H-20
18	H-21
19	H-22
20	H-23
21	H-32
22	H-33
23	H-34
24	H-35
25	H-36
26	H-37
27	H-72
28	H-73
29	H-74
30	H-75
31	H-76
32	H-77
33	H-78
34	H-79
35	H-80
36	H-81
37	H-85
38	H-86
39	H-87
40	H-88
41	H-89
42	H-90
43	H-91
44	H-92
45	H-93
46	H-94
47	H-99
48	H-100
49	H-101
50	H-102
51	H-111
52	H-112
53	H-113
54	H-131
55	H-132
56	H-146
57	H-147
58	H-148
59	H-149
60	H-150
61	H-151
62	H-152
63	H-153
64	H-154
65	H-155
66	H-156
67	H-157
68	H-158
69	H-159
70	H-160
71	H-161
72	H-162
73	H-163
74	S-16
75	S-17
76	S-32
77	S-33
78	S-52
79	SS-1
80	SS-2

Table E-4

OU-1140 Sample Locations, Surveys, and Analyses

Sample Location	PRS	Field Surveys			Field Screening							Field Lab.						Laboratory Analyses															
		Land Survey	Geophysics	Radiation	Gross Alpha	Gross Gamma/Beta	Organic Vapor	Explosives	X-Ray Florescence	Lithologic Logging		Gross Alpha	Tritium	Soil Moisture	Gamma Spectroscopy	PCB	VOA	Gamma Spectroscopy	Isotopic Americium	Total Uranium	Isotopic Uranium	Isotopic Plutonium	Isotopic Thorium	Alkali Metals (Cs, Li)	VOA (SW8240)	Semivolatiles (SW8270)	TCLP	Metals (SW 6010)	PCB (SW 8080)	Asbestos	Mercury	Herbicides	Pesticides
		1			1	1	1			1	1	1			1	1	1	1			1		1	1	1		1	1	1	1			
H-11	46-004-m	1			1	1	1			1	1	1			1		1	1			1			1	1		1			1			
	46-004-s	1			1	1	1			1	1	1			1	1	1	1			1			1∞	1		1	1		1			
	46-004-b2	1			1	1	1			1	1	1			1		1	1			1		1	1∞	1		1			1			
	46-006-f	1			1	1	1			1		1			1	1	1	1			1			1	1		1	1	1	1			
	46-007	1			1	1	1			1		1			1		1	1			1			1	1		1†			1			
	46-008-b	1			1	1										1									1			1					
	Agg 5.6	1			1	1									1			1			1		1				1						

† - Specifically Beryllium in addition to the full suite of metals.

∞ - VOA only on speicmens from sample sites in upper reaches of drainnage channels only.

Table E-4

OU-1140 Sample Locations, Surveys, and Analyses

Sample Location	PRS	Field Surveys			Field Screening							Field Lab.						Laboratory Analyses																
		Land Survey	Geophysics	Radiation	Gross Alpha	Gross Gamma/Beta	Organic Vapor		Explosives	X-Ray Florescence	Lithologic Logging	Gross Alpha	Tritium	Soil Moisture	Gamma Spectroscopy	PCB	VOA	Gamma Spectroscopy	Isotopic Americium	Total Uranium	Isotopic Uranium	Isotopic Plutonium	Isotopic Thorium	Alkali Metals (Cs, Li)	VOA (SW8240)	Semivolatiles (SW8270)	TCLP	Metals (SW 6010)	PCB (SW 8080)	Asbestos	Mercury	Herbicides	Pesticides
		1			1	1	1			1	1	1			1	1	1	1			1	1	1	1	1		1	1	1	1				
H-165	46-009-a	1			1	1	1			1	1	1			1	1	1	1			1	1	1	1	1		1	1	1					
	46-003-f	1			1	1	1			1	1	1			1	1	1	1			1			1∞	1		1	1		1				
	46-008-a	1			1	1				1															1		1							
	46-008-g	1			1	1	1									1	1							1	1			1						
	46-004-t	1			1	1	1				1				1		1	1						1										
	46-010-b																																	
	46-aoc-01																																	
	46-004-f	1			1	1	1			1		1			1	1	1	1			1			1	1		1	1		1				
	46-004-r	1																																
	46-004-w	1			1	1	1									1	1							1	1			1						
	46-008-d	1			1		1			1		1			1	1	1	1			1			1	1		1	1		1				
	46-004-n																																	
	46-006-b	1			1	1				1		1			1	1		1			1				1		1	1						
	Agg 5.6	1			1	1									1			.			1		1				1							

† - Specifically Beryllium in addition to the full suite of metals.

∞ - VOA only on specimens from sample sites in upper reaches of drainnage channels only.

Table E-4

OU-1140 Sample Locations, Surveys, and Analyses

Sample Location	PRS	Field Surveys			Field Screening							Field Lab.						Laboratory Analyses														
		Land Survey	Geophysics	Radiation	Gross Alpha	Gross Gamma/Beta	Organic Vapor		Explosives	X-Ray Florescence	Lithologic Logging	Gross Alpha	Tritium	Soil Moisture	Gamma Spectroscopy	PCB	VOA	Gamma Spectroscopy	Isotopic Americium	Total Uranium	Isotopic Uranium	Isotopic Plutonium	Isotopic Thorium	Alkali Metals (Cs, Li)	VOA (SW8240)	Semivolatiles (SW8270)	TCLP	Metals (SW 6010)	PCB (SW 8080)	Asbestos	Mercury	Herbicides	Pesticides
		1			1	1	1			1	1	1			1	1	1	1			1		1	1	1		1	1		1			
S-7	46-008-b	1			1	1										1									1			1					
	46-007	1			1	1	1			1		1			1		1	1			1			1	1		1††			1			
	46-004-b2	1			1	1	1			1	1	1			1		1	1			1		1	1••	1		1			1			

† - Specifically Beryllium in addition to the full suite of metals.

•• - VOA only on speicmens from sample sites in upper reaches of drainnage channels only.

Table E-4

OU-1140 Sample Locations, Surveys, and Analyses

Sample Location	PRS	Field Surveys			Field Screening							Field Lab.						Laboratory Analyses														
		1			1	1	1									1	1						1	1			1					
		Land Survey	Geophysics	Radiation	Gross Alpha	Gross Gamma/Beta	Organic Vapor		Explosives	X-Ray Florescence	Lithologic Logging	Gross Alpha	Tritium	Soil Moisture	Gamma Spectroscopy	PCB	VOA	Gamma Spectroscopy	Isotopic Americium	Total Uranium	Isotopic Uranium	Isotopic Plutonium	Isotopic Thorium	Alkali Metals (Cs, Li)	VOA (SW8240)	Semivolatiles (SW8270)	TCLP	Metals (SW 6010)	PCB (SW 8080)	Asbestos	Mercury	Herbicides	Pesticides
SS-16	46-004-r	1																														
	46-004-w	1			1	1	1									1	1							1	1			1				
	46-aoc-01																															

† - Specifically Beryllium in addition to the full suite of metals.

•• - VOA only on speicmens from sample sites in upper reaches of drainnage channels only.

Table E-4

OU-1140 Sample Locations, Surveys, and Analyses

Sample Location	PRS	Field Surveys			Field Screening							Field Lab.						Laboratory Analyses															
		Land Survey	Geophysics	Radiation	Gross Alpha	Gross Gamma/Beta	Organic Vapor		Explosives	X-Ray Florescence	Lithologic Logging	Gross Alpha	Tritium	Soil Moisture	Gamma Spectroscopy	PCB	VOA	Gamma Spectroscopy	Isotopic Americium	Total Uranium	Isotopic Uranium	Isotopic Plutonium	Isotopic Thorium	Alkali Metals (Cs, Li)	VOA (SW8240)	Semivolatiles (SW8270)	TCLP	Metals (SW 6010)	PCB (SW 8080)	Asbestos	Mercury	Herbicides	Pesticides
		1			1	1	1			1	1	1			1	1	1	1			1	1	1	1	1		1	1	1	1			
V-28	46-003-a	1			1	1	1			1	1	1			1		1	1			1		1	1∞	1		1			1			
	46-009-a	1			1	1	1			1	1	1			1	1	1	1			1	1	1	1	1		1	1	1				

† - Specifically Beryllium in addition to the full suite of metals.

∞ - VOA only on specimens from sample sites in upper reaches of drainnage channels only.

Table E-2
OU 1140 Sample Locations

	Sample Location	Section	Overlapping PRSs	Outfall
(1.)	H-1	5.3	not needed	
			overlap w H-48	
(2.)	H-2	5.3	46-006-a	
			46-004-c2	S
(3.)	H-3	5.3	46-006-a	
			46-004-c2	S
(4.)	H-4	5.4	46-004-c2	P
			46-006-a	P
			Agg 5.6	P,AL
			46-007	AL
(5.)	H-5	5.4	46-004-c2	P
			46-006-a	P
			Agg 5.6	P,AL
			46-007	AL
(6.)	H-6	5.4	46-004-c2	P
			46-006-a	P
			Agg 5.6	P,AL
			46-007	AL
(7.)	H-7	5.4	46-004-c2	P,
			46-006-a	P
			Agg 5.6	P,AL
			46-007	AL
(8.)	H-8	5.4	46-004-g	N
			46-007	AN
			Agg 5.6	AN
			46-004-m	AN
(9.)	H-9	5.4	46-004-g	N
			46-007	AN
			Agg 5.6	AN
			46-004-m	AN
(10.)	H-10	5.4	46-004-m	M
			46-004-s	M
			46-004-b2	M
			46-006-f	M
			46-007	M
			46-008-b	M
			Agg 5.6	M
(11.)	H-11	5.4	46-004-m	CC,M
			46-004-s	X,M
			46-004-b2	U,M
			46-006-f	
			46-007	
			46-008-b	
			Agg 5.6	
(12.)	H-12	5.4	Agg 5.6	TT
(13.)	H-13	5.4	Agg 5.6	TT
(14.)	H-14	5.4	46-004-c2	P
			46-006-a	P
			Agg 5.6	P,AL
			46-007	AL
(15.)	H-15	5.4	46-004-c2	P
			46-006-a	P
			Agg 5.6	P,AL
			46-007	AL
(16.)	H-16	5.4	46-004-c2	P
			46-006-a	P
			Agg 5.6	P,AL
			46-007	AL
(17.)	H-17	5.4	46-004-c2	P
			46-006-a	P
			Agg 5.6	P,AL
			46-007	AL
(18.)	H-18	5.4	46-004-c2	P
			46-006-a	P
			Agg 5.6	P
			46-007	P
(19.)	H-19	5.4	46-004-c2	P
			46-006-a	P
			Agg 5.6	P
			46-007	P
(20.)	H-20	5.4	46-004-g	N
			46-007	AN
			Agg 5.6	AN
			46-004-m	AN
(21.)	H-21	5.4	46-004-g	N
			46-007	AN
			Agg 5.6	AN
			46-004-m	AN
(22.)	H-22	5.4	46-004-g	N
			46-007	AN
			Agg 5.6	AN
			46-004-m	AN
(23.)	H-23	5.4	46-004-g	N
			46-007	AN
			Agg 5.6	AN
			46-004-m	AN
(24.)	H-24	5.4	46-004-z	L
			46-006-d	L
			46-006-g	L

Table E-2
OU 1140 Sample Locations

	Sample Location	Section	Overlapping PRSs	Outfall
(25.)	H-25	5.4	46-004-z	L
			46-006-d	L
			46-006-g	L
(26.)	H-26	5.4	46-004-z	L
			46-006-d	L
			46-006-g	L
(27.)	H-27	5.4	46-004-z	L
			46-006-d	L
			46-006-g	L
(28.)	H-28	5.4	46-004-z	L
			46-006-d	L
			46-006-g	L
(29.)	H-29	5.4	46-004-z	L
			46-006-d	L
			46-006-g	L
(30.)	H-30	5.4	46-004-z	L
			46-006-d	L
			46-006-g	L
(31.)	H-31	5.4	46-004-z	L
			46-006-d	L
			46-006-g	L
(32.)	H-32	5.4	46-006-d	AI
			46-006-g	AI
			Agg 5.6	AI
(33.)	H-33	5.4	46-006-d	AI
			46-006-g	AI
			Agg 5.6	AI
(34.)	H-34	5.4	46-006-d	AH
			Agg 5.6	AH
(35.)	H-35	5.4	46-006-d	AG
			Agg 5.6	AG
(36.)	H-36	5.4	46-006-d	AG
			Agg 5.6	AG
(37.)	H-37	5.4	46-006-d	AH
			Agg 5.6	AH
(38.)	H-38	5.4	46-004-y	K
			46-006-d	
(39.)	H-39	5.4	46-004-y	K
			46-006-d	
(40.)	H-40	5.4	46-004-y	K
			46-006-d	
(41.)	H-41	5.4	not needed ID & SR	
(42.)	H-42	5.4	not needed ID & SR	
(43.)	H-43	5.4	not needed ID & SR	
(44.)	H-44	5.4	46-004-g	N
(45.)	H-45	5.4	46-004-g	N
(46.)	H-46	5.4	46-004-g	N
(47.)	H-47	5.4	not needed SR	
(48.)	H-48	5.4	46-004-c2	S
			46-006-a	
(49.)	H-49	5.4	46-004-c2	S
			46-006-a	
(50.)	H-50	5.4	46-004-c2	S
			46-006-a	
(51.)	H-51	5.4	46-004-m	CC
(52.)	H-52	5.4	46-004-m	CC
(53.)	H-53	5.4	46-004-m	CC
(54.)	H-54	5.4	46-004-b2	
			46-008-b	
			46-007	
(55.)	H-55	5.4	46-004-b2	U
(56.)	H-56	5.4	46-004-b2	U
(57.)	H-57	5.4	46-004-b2	U
(58.)	H-58	5.4	not needed outfall W not PRS	W
(59.)	H-59	5.4	not needed outfall W not PRS	W
(60.)	H-60	5.4	46-004-s	X
			46-007	
(61.)	H-61	5.4	46-004-s	X
			46-007	
(62.)	H-62	5.4	46-004-s	X
			46-007	
(63.)	H-63	5.4	46-004-y	K
			46-006-d	
(64.)	H-64	5.4	46-004-y	K
			46-006-d	
(65.)	H-65	5.4	46-004-x	J
			46-006-d	

Table E-2
OU 1140 Sample Locations

	Sample Location	Section	Overlapping PRSs	Outfall
(66.)	H-66	5.4	46-004-x	J
			46-006-d	
(67.)	H-67	5.4	46-004-x	J
			46-006-d	
(68.)	H-68	5.4	46-004-x	J
			46-006-d	
(69.)	H-69	5.4	46-004-x	J
			46-006-d	
(70.)	H-70	5.4	46-004-x	J
			46-006-d	
(71.)	H-71	5.4	46-004-x	J
			46-006-d	
(72.)	H-72	5.4	46-004-h	A
			46-004-q	B
			Agg 5.6	
(73.)	H-73	5.4	46-004-h	A
			46-004-q	B
			Agg 5.6	
(74.)	H-74	5.4	46-004-a2	I
			46-006-d	I
			Agg 5.6	I
			46-004-u	F
			46-004-v	G
(75.)	H-75	5.4	46-004-a2	I
			46-006-d	I
			Agg 5.6	I
			46-004-u	F
			46-004-v	G
(76.)	H-76	5.4	46-004-a2	I
			46-006-d	I
			Agg 5.6	I
			46-004-u	F
			46-004-v	G
(77.)	H-77	5.4	46-004-a2	I
			46-006-d	I
			Agg 5.6	I
			46-004-u	F
			46-004-v	G
(78.)	H-78	5.4	46-004-a2	I
			46-006-d	I
			Agg 5.6	I
			46-004-u	F
			46-004-v	G
(79.)	H-79	5.4	46-004-a2	I
			46-006-d	I
			Agg 5.6	I
			46-004-u	F
			46-004-v	G
(80.)	H-80	5.4	46-004-u	F
			Agg 5.6	F
(81.)	H-81	5.4	46-004-v	G
			Agg 5.6	G
(82.)	H-82	5.4	46-004-a2	MM
(83.)	H-83	5.4	46-004-a2	MM
(84.)	H-84	5.4	46-004-a2	MM
(85.)	H-85	5.4	46-008-e	RR
			Agg 5.6	RR
			46-008-f	RR
(86.)	H-86	5.4	46-008-e	RR
			Agg 5.6	RR
			46-008-f	RR
(87.)	H-87	5.4	46-004-h	A
			46-004-q	B
			Agg 5.6	
(88.)	H-88	5.4	46-004-h	A
			46-004-q	B
			Agg 5.6	
(89.)	H-89	5.4	46-004-h	A
			Agg 5.6	
(90.)	H-90	5.4	46-004-q	B
			Agg 5.6	
(91.)	H-91	5.4	46-004-h	AF
			Agg 5.6	AF
(92.)	H-92	5.4	46-004-h	AF
			Agg 5.6	AF
(93.)	H-93	5.4	46-004-h	AE
			Agg 5.6	AE
(94.)	H-94	5.4	46-004-h	AE
			Agg 5.6	AE
(95.)	H-95	5.5	46-009-a	
(96.)	H-96	5.3	46-008-g	
			46-aoc-01	
(97.)	H-97	5.3	46-008-g	
			46-aoc-01	
(98.)	H-98	5.3	46-008-g	
			46-aoc-01	

Table E-2
OU 1140 Sample Locations

	Sample Location	Section	Overlapping PRSs	Outfall
(99.)	H-99	5.4	46-006-b	QQ
			Agg 5.6	QQ
(100.)	H-100	5.4	46-006-b	QQ
			Agg 5.6	QQ
(101.)	H-101	5.4	46-004-n	OO
			46-006-b	OO
			Agg 5.6	OO
(102.)	H-102	5.4	46-004-n	OO
			46-006-b	OO
			Agg 5.6	OO
(103.)	H-103	5.4	46-003-a	HH
			46-009-a	
(104.)	H-104	5.4	46-003-a	HH
			46-009-a	
(105.)	H-105	5.4	46-003-a	HH
			46-009-a	
(106.)	H-106	5.4	46-003-a	HH
			46-009-a	
(107.)	H-107	5.4	46-003-a	HH
			46-009-a	
(108.)	H-108	5.4	46-003-a	HH
			46-009-a	
(109.)	H-109	5.4	46-003-a	HH
			46-009-a	
(110.)	H-110	5.4	not needed	
			not PRS specific	
(111.)	H-111	5.4	46-004-f	NN
			46-004-r	NN
			46-004-w	NN
			46-008-d	NN
			46-aoc-01	NN
			Agg 5.6	NN
(112.)	H-112	5.4	46-004-f	NN
			46-004-r	NN
			46-004-w	NN
			46-008-d	NN
			46-aoc-01	NN
			Agg 5.6	NN
(113.)	H-113	5.4	46-004-f	NN
			46-004-r	NN
			46-004-w	NN
			46-008-d	NN
			46-aoc-01	NN
			Agg 5.6	NN
(114.)	H-114	5.4	46-004-f	NN
			46-004-r	NN
			46-004-w	NN
			46-008-d	NN
			46-aoc-01	NN
			46-004-t	BB
			46-008-g	BB
			46-010-b	BB
			Agg 5.6	
(115.)	H-115	5.4	46-004-f	NN
			46-004-r	NN
			46-004-w	NN
			46-008-d	NN
			46-aoc-01	NN
			46-004-t	BB
			46-008-g	BB
			46-010-b	BB
			Agg 5.6	
(116.)	H-116	5.4	46-004-t	YY
			46-aoc-01	YY
(117.)	H-117	5.4	46-003-f	FF
			46-008-a	ZZ
			46-008-g	ZZ
(118.)	H-118	5.4	46-003-f	FF
			46-008-a	ZZ
			46-008-g	ZZ
(119.)	H-119	5.4	46-003-f	FF
			46-008-a	ZZ
			46-008-g	ZZ
(120.)	H-120	5.4	46-003-f	FF
			46-008-a	ZZ
			46-008-g	ZZ
(121.)	H-121	5.4	46-003-f	FF
			46-008-a	ZZ
			46-008-g	ZZ
(122.)	H-122	5.4	46-003-f	FF
			46-008-a	ZZ
			46-008-g	ZZ
(123.)	H-123	5.4	46-008-a	ZZ
			46-008-g	ZZ
(124.)	H-124	5.4	46-008-a	ZZ
			46-008-g	ZZ
(125.)	H-125	5.5	46-009-a	
(126.)	H-126	5.5	46-009-b	
(127.)	H-127	5.5	46-009-b	

Table E-2
OU 1140 Sample Locations

	Sample Location	Section	Overlapping PRSs	Outfall
(128.)	H-128	5.5	46-009-b	
(129.)	H-129	5.5	not needed	
			not historic flow	
(130.)	H-130	5.5	not needed	
			not historic flow	
(131.)	H-131	5.4	46-008-e	AB
			Agg 5.6	AB
			46-008-f	AB
(132.)	H-132	5.4	46-008-e	AB
			Agg 5.6	AB
			46-008-f	AB
(133.)	H-133	5.4	46-002	JJ
(134.)	H-134	5.4	46-002	JJ
			46-009-b	
(135.)	H-135	5.4	46-002	JJ
			46-009-b	
(136.)	H-136	5.4	46-002	JJ
			46-009-b	
(137.)	H-137	5.4	46-002	JJ
			46-009-b	
(138.)	H-138	5.4	46-002	II
			46-009-b	
(139.)	H-139	5.4	46-002	II
			46-009-b	
(140.)	H-140	5.4	46-002	II
			46-009-b	
(141.)	H-141	5.4	46-002	II
			46-009-b	
(142.)	H-142	5.4	46-002	II
			46-009-b	
(143.)	H-143	5.4	not needed	
			not historic flow	
(144.)	H-144	5.4	not needed	
			not historic flow	
(145.)	H-145	5.4	not needed	
			not historic flow	
(146.)	H-146	5.4	46-004-c	PP
			Agg 5.6	PP
(147.)	H-147	5.4	46-004-c	PP
			Agg 5.6	PP
(148.)	H-148	5.4	46-003-g	KK
			Agg 5.6	KK
(149.)	H-149	5.4	46-003-g	KK
			Agg 5.6	KK
(150.)	H-150	5.4	46-003-g	KK
			Agg 5.6	KK
(151.)	H-151	5.4	46-003-g	KK
			Agg 5.6	KK
(152.)	H-152	5.4	46-003-g	KK
			Agg 5.6	KK
(153.)	H-153	5.4	46-003-g	KK
			Agg 5.6	KK
(154.)	H-154	5.4	46-003-g	KK
			Agg 5.6	KK
(155.)	H-155	5.4	46-003-g	KK
			Agg 5.6	KK
(156.)	H-156	5.4	46-003-g	KK
			Agg 5.6	KK
(157.)	H-157	5.4	46-005	LL
			Agg 5.6	LL
(158.)	H-158	5.4	46-005	LL
			Agg 5.6	LL
(159.)	H-159	5.4	46-005	LL
			Agg 5.6	LL
(160.)	H-160	5.4	46-005	LL
			Agg 5.6	LL
(161.)	H-161	5.4	46-005	LL
			Agg 5.6	LL
(162.)	H-162	5.4	Agg 5.6	Q
(163.)	H-163	5.4	Agg 5.6	Q
(164.)	H-164	5.5	46-009-b	
(165.)	H-165	5.5	46-009-a	-
			46-003-f	FF
			46-008-a	ZZ
			46-008-g	ZZ
			46-004-t	YY
			46-010-b	BB
			46-aoc-01	BB
			46-004-f	BB
			46-004-r	BB
			46-004-w	NN
			46-008-d	NN
			46-004-n	OO
			46-006-b	OO
			Agg 5.6	

Table E-2
OU 1140 Sample Locations

	Sample Location	Section	Overlapping PRSs	Outfall
(166.)	H-166	5.5	46-009-a	
			46-003-f	FF
			46-008-a	ZZ
			46-008-g	ZZ
			46-004-t	YY
			46-010-b	BB
			46-aoc-01	BB
			46-004-f	BB
			46-004-r	BB
			46-004-w	NN
			46-008-d	NN
			46-004-n	OO
			46-006-b	OO
			Agg 5.6	
(167.)	H-167	5.5	not needed	
			overlap w H-108	
(168.)	H-168	5.5	46-009-a	
			46-006-b	
			Agg 5.6	
(169.)	NS-1	5.3	46-006-g	
(170.)	NS-2	5.3	46-006-g	
(171.)	NS-3	5.3	46-006-b	
(172.)	S-1	5.3	46-006-d	
			46-006-g	
(173.)	S-2	5.3	46-006-d	
			46-006-g	
(174.)	S-3	5.3	46-006-d	
(175.)	S-4	5.3	46-006-f	
(176.)	S-5	5.3	46-006-f	
(177.)	S-6	5.3	46-006-f	
(178.)	S-7	5.3	46-008-b	
			46-007	
			46-004-b2	U
(179.)	S-8	5.3	46-008-b	
(180.)	S-9	5.3	not needed	U
			overlap w H-54	
(181.)	S-10	5.3	46-008-e	
(182.)	S-11	5.3	46-008-e	
(183.)	S-12	5.3	46-008-e	
(184.)	S-13	5.3	46-008-e	
(185.)	S-14	5.3	46-007	
			46-004-s	X
(186.)	S-15	5.3	46-007	
			46-004-s	X
(187.)	S-16	5.6	Agg 5.6	
(188.)	S-17	5.6	Agg 5.6	
(189.)	S-18	5.1	46-003-d	
(190.)	S-19	5.1	46-003-d	
(191.)	S-20	5.1	46-003-d	
(192.)	S-21	5.1	46-003-d	
(193.)	S-22	5.1	46-003-d	
(194.)	S-23	5.1	46-003-d	
(195.)	S-24	5.1	46-003-d	
(196.)	S-25	5.1	46-004-p	
(197.)	S-26	5.1	46-004-p	
(198.)	S-27	5.3	46-006-d	
(199.)	S-28	5.3	46-006-d	
(200.)	S-29	5.3	46-008-f	
(201.)	S-30	5.3	46-003-h	GG
(202.)	S-31	5.3	46-003-h	GG
(203.)	S-32	5.6	Agg 5.6	
(204.)	S-33	5.6	Agg 5.6	
(205.)	S-34	5.1	46-004-d	
(206.)	S-35	5.1	46-004-d	
(207.)	S-36	5.1	46-004-e	
(208.)	S-37	5.1	46-004-e	
(209.)	S-38	5.3	46-010-d	
(210.)	S-39	5.3	46-010-d	
(211.)	S-40	5.3	46-008-a	
(212.)	S-41	5.3	46-008-a	
(213.)	S-42	5.4	not needed	
			replace by SS-15	
			and SS-17	
(214.)	S-43	5.4	not needed	
			replace by SS-16	
(215.)	S-44	5.2	46-005	
(216.)	S-45	5.2	46-005	
(217.)	S-46	5.2	46-005	
(218.)	S-47	5.2	46-005	
(219.)	S-48	5.2	46-005	
(220.)	S-49	5.2	46-005	
(221.)	S-50	5.2	46-005	
(222.)	S-51	5.2	46-005	
(223.)	S-52	5.6	Agg 5.6	

Table E-2
OU 1140 Sample Locations

	Sample Location	Section	Overlapping PRSs	Outfall
(224.)	S-53	5.2	46-002	
(225.)	S-54	5.2	46-002	
(226.)	S-55	5.2	46-002	
(227.)	S-56	5.2	46-002	
(228.)	S-57	5.2	46-002	
(229.)	S-58	5.2	46-002	
(230.)	S-59	5.2	not needed not needed around siphon box	
(231.)	S-60	5.2	46-002	
(232.)	S-61	5.2	not needed not needed around siphon box	
(233.)	S-62	5.2	not needed not needed around siphon box	
(234.)	S-63	5.2	not needed not needed around siphon box	
(235.)	S-64	5.2	46-002	
(236.)	S-65	5.2	46-002	
(237.)	S-66	5.2	46-002	
(238.)	S-67	5.3	46-006-c	
(239.)	S-68	5.3	46-006-c	
(240.)	S-69	5.3	46-008-d	
(241.)	S-70	5.3	46-008-d	
(242.)	S-71	5.3	46-003-f	
(243.)	S-72	5.3	46-003-f	
(244.)	S-73	5.3	46-003-f	
(245.)	S-74	5.3	46-003-h	GG
(246.)	S-75	5.1	46-004-c	
(247.)	S-76	5.1	46-004-c	
(248.)	S-77	5.2	46-002	
(249.)	S-78	5.2	46-002	
(250.)	S-79	5.2	46-002	
(251.)	S-80	5.1	46-003-d	
(252.)	S-81	5.2	46-003-d	
(253.)	SAB-1	5.2	46-002	
(254.)	SAB-1a	5.2	SAB-1 downhole end	
(255.)	SS-1	5.6	Agg 5.6	
(256.)	SS-2	5.6	Agg 5.6	
(257.)	SS-3	5.1	46-003-a	
(258.)	SS-4	5.2	46-005	
(259.)	SS-5	5.2	46-005	
(260.)	SS-6	5.2	46-005	
(261.)	SS-7	5.2	46-005	
(262.)	SS-8	5.2	46-002	
(263.)	SS-9	5.2	46-002	
(264.)	SS-10	5.2	not needed new type replace w S-77 for sand filter	
(265.)	SS-11	5.2	46-002	
(266.)	SS-12	5.2	not needed new type replace w S-78 for sand filter	
(267.)	SS-13	5.2	not needed new type replace w S-79 for sand filter	
(268.)	SS-14	5.1	46-003-a	
(269.)	SS-15	5.4	46-004-f	Y
(270.)	SS-16	5.4	46-004-r 46-004-w 46-aoc-01	Z AA -
(271.)	SS-17	5.1	46-003-c 46-004-f	 Y
(272.)	SS-18	5.1	46-004-c	
(273.)	SS-19	5.1	46-004-c	
(274.)	SS-20	5.1	46-004-d	
(275.)	SS-21	5.1	46-004-d	
(276.)	SS-22	5.1	46-004-e	
(277.)	SS-23	5.1	46-004-e	
(278.)	SS-24	5.1	46-004-p	
(279.)	SS-25	5.1	46-004-p	

Table E-2
OU 1140 Sample Locations

	Sample Location	Section	Overlapping PRSs	Outfall
(280.)	V-1	5.1	not needed VCA replace by S-75	
(281.)	V-2	5.1	not needed VCA replace by S-76	
(282.)	V-3	5.1	46-003-e	
(283.)	V-4	5.1	not needed new DQOs	
(284.)	V-5	5.1	46-003-e	
(285.)	V-6	5.1	46-003-e	
(286.)	V-7	5.1	46-003-e	
(287.)	V-8	5.1	46-003-e	
(288.)	V-9	5.1	46-003-e	
(289.)	V-10	5.1	46-003-e	
(290.)	V-11	5.1	not needed new DQOs	
(291.)	V-12	5.1	46-003-e	
(292.)	V-13	5.1	46-003-e	
(293.)	V-14	5.1	not needed new DQOs	
(294.)	V-15	5.5	46-009-a 46-003-a	
(295.)	V-16	5.5	46-009-a	
(296.)	V-17	5.5	not needed overlap w V-31	
(297.)	V-18	5.5	46-009-a	
(298.)	V-19	5.5	46-009-a	
(299.)	V-20	5.5	46-009-a	
(300.)	V-21	5.3	46-003-f	
(301.)	V-22	5.3	46-003-f	
(302.)	V-23	5.3	not needed new DQOs	
(303.)	V-24	5.3	46-003-f	
(304.)	V-25	5.3	not needed new DQOs	
(305.)	V-26	5.1	46-003-a	
(306.)	V-27	5.1	not needed new DQOs	
(307.)	V-28	5.1	46-003-a 46-009-a	
(308.)	V-29	5.1	46-003-a 46-009-a	
(309.)	V-30	5.1	46-003-a 46-009-a	
(310.)	V-31	5.1	46-003-a 46-009-a	
(311.)	V-32	5.1	46-003-a 46-009-a	
(312.)	V-33	5.1	46-003-a 46-009-a	
(313.)	V-34	5.1	not needed new DQOs	
(314.)	V-35	5.1	not needed new DQOs	
(315.)	V-36	5.1	not needed new DQOs	
(316.)	V-37	5.1	not needed new DQOs	
(317.)	V-38	5.1	46-003-c	
(318.)	V-39	5.1	not needed new DQOs	
(319.)	V-40	5.1	not needed new DQOs	
(320.)	V-41	5.1	46-003-c	
(321.)	V-42	5.1	not needed new DQOs	
(322.)	V-43	5.1	46-003-c	
(323.)	V-44	5.1	46-003-c	
(324.)	V-45	5.1	46-003-f	
(325.)	V-46	5.1	not needed new DQOs	
(326.)	V-47	5.1	not needed new DQOs	
(327.)	V-48	5.1	46-003-c	
(328.)	V-49	5.1	not needed new DQOs	
(329.)	V-50	5.1	46-003-f	
(330.)	V-51	5.1	not needed new DQOs	
(331.)	V-52	5.1	46-003-f	
(332.)	V-53	5.1	not needed new DQOs	

Table E-2
OU 1140 Sample Locations

	Sample Location	Section	Overlapping PRSs	Outfall	Sample Location	Section	Overlapping PRSs	Outfall
(333.)	V-54	5.5	46-009-b					
(334.)	V-55	5.5	46-009-b					
(335.)	V-56	5.5	46-009-b					
(336.)	V-57	5.1	46-003-b					
(337.)	V-58	5.1	not needed new DQOs					
(338.)	V-59	5.1	46-003-b					
(339.)	V-60	5.1	46-003-b					
(340.)	V-61	5.1	46-003-b					
(341.)	V-62	5.1	not needed new DQOs					
(342.)	V-63	5.1	46-003-b					
(343.)	V-64	5.1	not needed new DQOs					
(344.)	V-65	5.1	not needed new DQOs					
(345.)	V-66	5.1	46-003-g					
(346.)	V-67	5.1	46-003-g					
(347.)	V-68	5.1	not needed new DQOs					
(348.)	V-69	5.1	46-003-g					
(349.)	V-70	5.1	not needed new DQOs					
(350.)	V-71	5.1	not needed new DQOs					