46

Los Alamos
NATIONAL LABORATORY
EST. 1943

ENTERED

Environmental Safety & Health
Environmental Protection Division
P.O. Box 1663, K491
Los Alamos, New Mexico 87545
(505) 665-6592/FAX (505) 665-3811

National Nuclear Security Administration
Los Alamos Site Office, A316
3747 West Jemez Road
Los Alamos, New Mexico 87545
(505) 667-5794/FAX (505) 667-5948

Date: March 13, 2012
Refer To: ENV-DO-12-0008
LAUR: 12-10463

Mr. Jerry Schoeppner, Acting Chief
Ground Water Quality Bureau
New Mexico Environment Department
Harold Runnels Building, Room N2261
1190 St. Francis Drive
P.O. Box 26110
Santa Fe, NM 87502

MAR 2012

Dear Mr. Schoeppner:

SUBJECT: NOTICE OF CHANGED CONDITIONS, EXPANSION OF THE SANITARY EFFLUENT RECLAMATION FACILITY AND SIGMA MESA EVAPORATION BASINS, DP-857

In accordance with §20.6.2.3107 of the New Mexico Administrative Code (NMAC), the US Department of Energy (DOE) and Los Alamos National Security, LLC (LANS) are notifying you of a planned change in the operating conditions at the Sanitary Effluent Reclamation Facility (SERF) and the Sigma Mesa SERF Evaporation Basins. The New Mexico Environment Department (NMED) was previously notified of the planned expansion of the effluent reuse system at Los Alamos National Laboratory in the July 2010 Discharge Permit DP-857 Renewal Application (ENV-RCRA-10-127) and in the 2011 Annual Report for Discharge Permit DP-857 (ENV-DO-12-003). The expansion of the effluent reuse system at Los Alamos National Laboratory is a necessary project for conserving potable water, reducing wastewater discharges to the environment, and reducing NPDES permitted outfalls.

Enclosures 1, 2, and 3 contain copies of the construction drawings for the foundation, civil, and mechanical/electrical/process portions of the project's design, respectively. Because this project is being constructed under a design-build contract, a complete set of construction drawings will not be available until the final stages of the project. However, DOE/LANS will submit design drawings as they become available for release.

Please contact Bob Beers at (505) 667-7969 of the Water Quality and RCRA Group (ENV-RCRA) if you have questions.

Sincerely,

Alison M. Dorries
Division Leader
Environmental Protection Division
Los Alamos National Laboratory

Sincerely,

Gene E. Turner
Environmental Permitting Manager
Environmental Projects Office
Los Alamos Site Office
Department of Energy

AMD:GET:BB/lm

Enclosures: a/s

Cy: James Bearzi, NMED/SWQB, Santa Fe, NM, w/enc.
John E. Kieling, NMED/HWB, Santa Fe, NM, w/enc.
Hai Shen, LASO-EPO, w/enc., A316
Kevin W. Smith, LASO-OOM, w/o enc., A316
Gene Turner, LASO-EPO, w/enc., A316
Steve Yanicak, LASO-GOV, w/enc., M894
Carl A. Beard, PADOPS, w/o enc., A102
Michael T. Brandt, ADESH, w/o enc., K491, (E-File)
Alison M. Dorries, ENV-DO, w/o enc., K491, (E-File)
Andy Erickson, UI-DO, w/o enc., K760, (E-File)
Scotty Jones, ENV-DO, w/o enc., K491, (E-File)
Lawrence Chavez, UI-OPS, w/o enc., K760, (E-File)
Charles Barnett, UI-OPS, w/o enc., J972, (E-File)
Mark Trujillo, ES-UI, w/o enc., K718, (E-File)
Chris L. Quartieri, MNGRFCT-DO, w/o enc., J590
Mike Saladen, ENV-RCRA, w/enc., K490, (E-File)
Bob Beers, ENV-RCRA, w/enc., K490
ENV-RCRA File, (12-0059) w/enc., M704
IRM-RMMSO, w/enc., A150, (E-File)

ENV-RCRA-12-0059

ENCLOSURE 2

LAUR-12-10463

SANITARY EFFLUENT RECLAMATION FACILITY (SERF) EXPANSION PROJECT

CIVIL AND PROCESS DRAWINGS FOR GRADING, EXCAVATION AND PIPING RELATED CONSTRUCTION ACTIVITIES

OCTOBER 24, 2011

DESIGN–BUILD DELIVERY

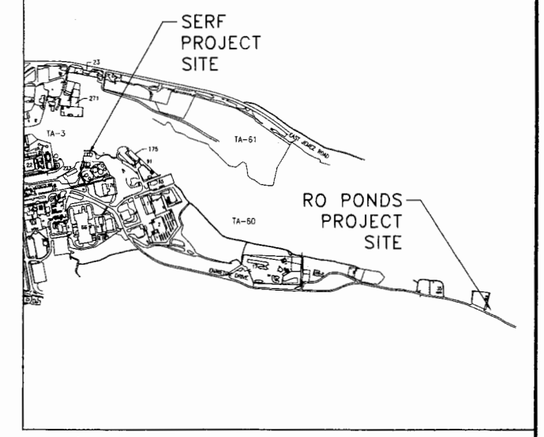

LOCATION PLAN
SCALE: NONE

LIST OF DRAWINGS

	REVISION NUMBER	SHEET NUMBER	DISCIPLINE/SHEET NUMBER	DRAWING TITLE
	0	1	G-0001	COVER SHEET/INDEX
*	0	2	C-0001	GENERAL NOTES
*	0	3	C-0002	LEGEND AND ABBREVIATIONS
*	0	4	C-1000	OVERALL SITE/SURVEY
*	0	5	C-1001	SERF SITE AND PIPING PLAN
*	0	6	C-1002	SERF GRADING PLAN
*	0	7	C-1003	RO REJECT EVAP PONDS SITE AND PIPING PLAN
*	0	8	C-1004	RO REJECT EVAP PONDS GRADING PLAN
*	0	9	C-1005	SERF PLAN AND PROFILE
*	0	10	C-3000	RO REJECT EVAP PONDS SECTIONS
*	0	11	C-3001	RO REJECT EVAP PONDS DETAIL SECTIONS
*	0	12	C-5000	PIPING DETAILS
*	0	13	C-5001	MISCELLANEOUS DETAILS
	1	14	S-0001	GENERAL NOTES
	1	15	S-1000	SERF FOUNDATION PLAN
	1	16	S-1001	SERF FRAMING PLAN
	0	17	S-1002	400,000 GAL STORAGE TANK PLAN
	1	18	S-3000	SERF FOUNDATION SECTIONS AND DETAILS
	0	19	S-3001	SERF FRAMING SECTIONS AND DETAILS
	1	20	S-3002	SERF FRAMING SECTIONS AND DETAILS
	1	21	S-4000	SERF BUILDING SECTIONS
	1	22	S-4001	SERF BUILDING SECTIONS
	0	23	S-4002	400,000 GAL STORAGE TANK SECTION AND DETAIL
	0	24	S-5000	STANDARD DETAILS
	0	25	S-5001	STANDARD DETAILS
	0	26	A-0001	LEGEND AND ABBREVIATIONS
	0	27	A-1000	ARCHITECTURAL CODE DATA AND LIFE SAFETY PLAN
	0	28	A-1001	ARCHITECTURAL FLOOR PLAN
	0	29	A-1002	ARCHITECTURAL ROOF PLAN
	0	30	A-2000	ARCHITECTURAL BUILDING ELEVATIONS
	0	31	A-2001	ARCHITECTURAL BUILDING ELEVATIONS
	0	32	A-3000	ARCHITECTURAL BUILDING SECTIONS
	0	33	A-5000	ARCHITECTURAL DETAILS
	0	34	A-7000	ARCHITECTURAL SCHEDULES AND DETAILS
	0	35	P-0001	PLUMBING LEGEND AND ABBREVIATIONS
	0	36	P-1000	SERF PLUMBING PLAN
	0	37	P-5000	STANDARD DETAILS
	0	38	P-7000	PLUMBING SCHEDULES

	REVISION NUMBER	SHEET NUMBER	DISCIPLINE/SHEET NUMBER	DRAWING TITLE
	0	39	D-1000	EXISTING SERF BUILDING GENERAL PROCESS EQUIPMENT ARRANGEMENT PLAN
	0	40	D-1001	SERF BUILDING GENERAL PROCESS EQUIPMENT ARRANGEMENT PLAN
*	0	41	D-1002	PUMP STATION PLAN AND SECTION
	0	42	D-3000	SERF BUILDING PROCESS SECTIONS
	0	43	M-0001	MECHANICAL LEGEND
	0	44	M-1000	SERF BUILDING HVAC PLAN
	0	45	M-5000	STANDARD DETAILS
	0	46	M-7000	MECHANICAL EQUIPMENT SCHEDULES
	0	47	E-0001	ELECTRICAL LEGEND
	0	48	E-1000	EXISTING SERF BUILDING ELECTRICAL PLAN
	0	49	E-1001	SERF BUILDING ELECTRICAL SITE PLAN
	0	50	E-1002	SERF BUILDING GROUNDING PLAN
	0	51	E-1003	SERF BUILDING LIGHTNING PROTECTION PLAN
	0	52	E-1004	SERF BUILDING POWER PLAN
	0	53	E-1005	SERF BUILDING LIGHTING PLAN
	0	54	E-1006	SERF BUILDING SPECIAL SYSTEMS PLAN
	0	55	E-1007	40,000 GALLON TANK POWER PLAN
	0	56	E-1008	BLOWDOWN PUMP STATION SITE PLAN
	0	57	E-1009	BLOWDOWN PUMP STATION POWER PLAN
	0	58	E-5000	STANDARD DETAILS
	0	59	E-5001	STANDARD DETAILS
	0	60	E-5002	FIRE ALARM RISER DIAGRAM
	0	61	E-5003	GROUNDING SYSTEM DIAGRAM
	0	62	E-6000	EXISTING SERF BUILDING ONE-LINE MODIFICATIONS
	0	63	E-6001	ONE-LINE SWB-B
	0	64	E-6002	ONE-LINE MCC-B
	0	65	E-6003	ONE-LINE BLOWDOWN PUMP STATION
	0	66	E-6004	PANELBOARD SCHEDULES
	0	67	E-7000	LIGHTING FIXTURE SCHEDULE
			SUPPLEMENTAL DRAWING FROM WESTERN STATES FIRE PROTECTION COMPANY	FIRE SPRINKLER SYSTEM (DRAWING 1 OF 1)
			SUPPLEMENTAL DRAWINGS FROM SIEMENS FOR REFERENCE	P&IDS (DRAWINGS 1-30)
			SUPPLEMENTAL DRAWINGS FROM SIEMENS FOR REFERENCE	F&FDS (DRAWINGS 1-5)

* DRAWINGS TO BE APPROVED BY LBO.

DRAWINGS PROVIDED FOR REFERENCE PURPOSES ONLY. DRAWINGS TO BE INCLUDED WITH FUTURE SUBMITTAL(S).

DRAWINGS NOT PART OF THIS SUBMITTAL. DRAWINGS TO BE INCLUDED WITH FUTURE SUBMITTAL(S).

LANL BUILDING OFFICIAL APPROVED 11-17-11 11-106 REVIEWED FOR LANL STANDARDS COMPLIANCE HLR SD 341 - 2 CH 16

CHRIS RODRIGUEZ NEW MEXICO 16239 LICENSED PROFESSIONAL ENGINEER 9/22/11

NO	DATE	CLASS REV	DESCRIPTION	DWN	VER	CHKD	SUB	APP

HDR ENGINEERING INC.
2155 LOUISIANA BLVD., NE
SUITE 9500
ALBUQUERQUE, NM 87110
MAIN: (505) 830-5400 FAX: (505) 830-5454

SERF EXPANSION

COVER SHEET/INDEX

DRAWN	HDR
DESIGN	HDR
CHECKED	HDR
DATE	10-24-11

BLDG. TA-

SUBMITTED: Gary L. Buys

APPROVED FOR RELEASE

Los Alamos NATIONAL LABORATORY PO Box 1663 Los Alamos, New Mexico 87545

SHEET G-0001

1 OF 67

CLASSIFICATION: UNCLASSIFIED REVIEWER: DATE 11/7/11

PROJECT ID 102310 DRAWING NO C-55752 REV 0

ECN-11-TA-03-1398-0000-0265

C:\pwworking\phx\d0224114\102310-G-0001-R0.dwg, Oct 25, 2011 @ 8:23am

GENERAL CONSTRUCTION NOTES:

1. THE SUBCONTRACTOR SHALL ABIDE BY ALL LOCAL, STATE AND FEDERAL RULES AND REGULATIONS WHICH APPLY TO THE CONSTRUCTION OF THESE IMPROVEMENTS AND SHALL CONFORM WITH THE LATEST STANDARD DETAILS AND SPECIFICATIONS OF THE LOS ALAMOS NATIONAL LABORATORIES AND THE GUIDELINES FOR SITE DEVELOPMENT AND INFRASTRUCTURE CONSTRUCTION. IF THERE IS A CONFLICT, THE STRICTER REQUIREMENT SHALL GOVERN.
2. LOCATIONS, ELEVATIONS AND DIMENSIONS OF EXISTING UTILITIES, STRUCTURES AND OTHER FEATURES ARE SHOWN ACCORDING TO THE BEST INFORMATION AVAILABLE AT THE TIME OF THE PREPARATION OF THESE PLANS, BUT DO NOT PURPORT TO BE ABSOLUTELY CORRECT AND ARE APPROXIMATE. THE SUBCONTRACTOR SHALL BE RESPONSIBLE FOR VERIFYING LOCATIONS, ELEVATIONS AND DIMENSIONS OF ALL EXISTING UTILITIES, STRUCTURES AND OTHER FEATURES WHICH PERTAIN TO AND AFFECT THE CONSTRUCTION OF THIS PROJECT, WHICH SHALL BE CONSIDERED INCIDENTAL TO COST OF COMPLETING CONSTRUCTION RELATED WORK. IF THE LOCATION OF A UTILITY IS UNKNOWN, ELEVATION IS INDICATED "UNK".
3. FACILITIES WHICH ARE NOT SPECIFICALLY LOCATED WITH ACTUAL HORIZONTAL AND VERTICAL CONTROLS ARE LOCATED APPROXIMATELY AND TO THE BEST AVAILABLE INFORMATION. ALL ELEVATIONS AND LOCATIONS OF EXISTING PIPING, UTILITIES, AND STRUCTURES AFFECTING NEW WORK SHALL BE FIELD VERIFIED BY THE SUBCONTRACTOR PRIOR TO BEGINNING CONSTRUCTION, WHICH SHALL BE CONSIDERED INCIDENTAL TO THE COST OF COMPLETING CONSTRUCTION RELATED WORK.
4. PRIOR TO FABRICATION OF PIPE, SUBCONTRACTOR SHALL VERIFY THE HORIZONTAL AND VERTICAL LOCATIONS OF ALL OBSTRUCTIONS WITH POTENTIAL TO CHANGE THE PIPE ALIGNMENT AND VERIFY EXISTING SIZE AND PIPE MATERIAL TYPE AT ALL POINTS OF CONNECTION TO EXISTING UTILITY LINES PRIOR TO INSTALLATION. THIS WORK IS INCIDENTAL TO COST OF PIPE INSTALLATION. SHOULD A CONFLICT EXIST, THE SUBCONTRACTOR SHALL NOTIFY THE ENGINEER SO THAT THE CONFLICT CAN BE RESOLVED WITH MINIMAL DELAY.
5. THE SUBCONTRACTOR SHALL POTHOLE EXISTING UTILITIES AHEAD PRIOR TO CONSTRUCTION TO ALLOW FOR ANY NECESSARY ADJUSTMENTS OR REALIGNMENTS, AND TO VERIFY PIPE TYPES FOR ORDERING PROPER TRANSITION AND/OR TIE-IN FITTINGS WHICH MAY BE REQUIRED, WHICH SHALL BE CONSIDERED INCIDENTAL TO THE COST OF COMPLETING CONSTRUCTION RELATED WORK.
6. THE OWNER'S REPRESENTATIVE SHALL BE NOTIFIED 24 HOURS PRIOR TO ANY CONSTRUCTION WORK. CONSTRUCTION WORK PERFORMED WITHOUT NOTIFICATION AND APPROVAL BY THE OWNER'S REPRESENTATIVE SHALL BE SUBJECT TO EXPOSURE, INSPECTION, AND REPLACEMENT AT THE SUBCONTRACTOR'S EXPENSE.
7. UTILITIES SHALL BE NOTIFIED AT LEAST 48 HOURS IN ADVANCE OF EXCAVATION, DISCONNECTION, CONNECTION, OR REMOVAL OF ANY PIPE, CONDUIT, OR POWER SUPPLY IN ORDER FOR THE AFFECTED UTILITY TO HAVE A REPRESENTATIVE AT THE PROJECT SITE.
8. ANY ADJUSTMENT OR RELOCATION OF EXISTING UTILITIES (UNDERGROUND, SURFACE, OR OVERHEAD) SHALL BE COORDINATED WITH THE OWNER OF THE AFFECTED UTILITY AT LEAST 48 HOURS PRIOR TO CONSTRUCTION.
9. THE SUBCONTRACTOR SHALL COORDINATE WORK SCHEDULES WITH THE OWNER'S REPRESENTATIVE SO AS TO PREVENT ANY CONFLICTING WORK CONDITIONS.
10. ALL FACILITIES DAMAGED OR REMOVED SHALL BE REPLACED AT THE SUBCONTRACTOR'S EXPENSE INCLUDING DAMAGE TO ANY EXISTING SIDEWALKS. DAMAGE TO EXISTING LANDSCAPING BY SUBCONTRACTOR SHALL BE REPAIRED BY THE SUBCONTRACTOR (I.E., ALL RUTS FILLED WITH CLEAN ROCK OR TURF TO MATCH THE SURROUNDING GROUND). EXCESS SOIL, ROCK, ETC. SHALL BE REMOVED TO LEAVE THE SITES CLEAN. ALL LANDSCAPING WHICH IS DISTURBED DURING CONSTRUCTION SHALL BE RESTORED TO ORIGINAL CONDITIONS OR REPLACED IN ACCORDANCE WITH THESE DOCUMENTS.
11. THE GENERAL SUBCONTRACTOR/SUBCONTRACTOR SHALL BE RESPONSIBLE FOR ALL EXPENSES TO OBTAIN ALL REQUIRED NEW MEXICO CONSTRUCTION INDUSTRIES DIVISION (CID) PERMITS FOR BUILDING, ELECTRICAL, MECHANICAL, ETC. FOR THIS PROJECT AND SCHEDULE ALL REQUIRED INSPECTIONS.
12. THE SUBCONTRACTOR SHALL NOT INSTALL ITEMS AS SHOWN ON THESE PLANS WHEN FIELD CONDITIONS ARE DIFFERENT THAN SHOWN IN THE PLANS. SUCH CONDITIONS SHALL BE BROUGHT TO THE ATTENTION OF THE ENGINEER IN A TIMELY MANNER. IN THE EVENT THE SUBCONTRACTOR DOES NOT NOTIFY THE ENGINEER IN A TIMELY MANNER, THE SUBCONTRACTOR ASSUMES FULL RESPONSIBILITY AND EXPENSE FOR ANY REVISIONS NECESSARY, INCLUDING ENGINEERING DESIGN FEES.
13. THE TERM "REMOVE" USED IN THIS PLAN SET INCLUDES THE DISPOSAL OF SAID MATERIAL. SUBCONTRACTOR SHALL BE RESPONSIBLE FOR DISPOSING OF ALL DEBRIS AND OTHER SUCH WASTE MATERIAL AT DISPOSAL SITES APPROVED BY GOVERNMENTAL AGENCIES REGULATING THE DISPOSAL OF SUCH MATERIALS.
14. IF ANY PREVIOUSLY UNIDENTIFIED ARCHEOLOGICAL OR CULTURAL ARTIFACTS ARE FOUND DURING CONSTRUCTION, WORK SHALL STOP IN THAT AREA AND THE SUBCONTRACTOR SHALL IMMEDIATELY NOTIFY THE LANL STR, WHO WILL NOTIFY THE LANL CULTURAL RESOURCES TEAM FOR FURTHER REQUIRED ACTIONS AND NECESSARY NOTIFICATIONS TO APPLICABLE AGENCIES.
15. THE SUBCONTRACTOR SHALL ADJUST ALL SURFACE FEATURES AFFECTED BY CONSTRUCTION ACTIVITIES TO FINAL GRADE, WHICH SHALL BE CONSIDERED INCIDENTAL TO THE COST OF COMPLETION RELATED CONSTRUCTION WORK. SURFACE FEATURES INCLUDE BUT ARE NOT LIMITED TO MANHOLES WITH ASSOCIATED RING COVER, AND CONCRETE SURFACE COMPLETION, VALVE VAULTS AND ACCESS COVERS, ETC. ANY DAMAGE TO THESE FEATURES SHALL BE REPLACED AT SUBCONTRACTORS EXPENSE.

SAFETY:

1. SUBCONTRACTOR SHALL COMPLY WITH APPLICABLE FEDERAL, STATE, AND LOCAL LAWS, ORDINANCES AND REGULATIONS CONCERNING CONSTRUCTION SAFETY AND HEALTH.
2. ONLY THE SUBCONTRACTOR SHALL BE RESPONSIBLE FOR SAFETY OF ALL WORK. ALL WORK, INCLUDING WORK WITHIN TRENCHES, SHALL BE IN ACCORDANCE WITH THE OCCUPATIONAL SAFETY AND HEALTH ACT (OSHA).
3. SUBCONTRACTOR SHALL TAKE NECESSARY SAFETY PRECAUTIONS AS REQUIRED BY FEDERAL, STATE AND LOCAL AUTHORITIES TO PROTECT PEDESTRIAN AND VEHICULAR TRAFFIC IN THE CONSTRUCTION AREA, WHICH INCLUDE BUT ARE NOT LIMITED TO: MAINTAINING ADEQUATE WARNING SIGNS, BARRICADES, LIGHTS, GUARD FENCES, WALKS AND BRIDGES.
4. SUBCONTRACTOR SHALL MAINTAIN ALL CONSTRUCTION BARRICADES AND SIGNAGE AT ALL TIMES AND SHALL VERIFY THE PROPER LOCATION OF ALL BARRICADING AT THE BEGINNING AND END OF EACH DAY.
5. ALL EXCAVATION, TRENCHING, AND SHORING ACTIVITIES SHALL BE CARRIED OUT IN ACCORDANCE WITH OSHA 29 CFR 1926.650 SUBPART P AS A MINIMUM STANDARD.
6. IF A PAVEMENT DROP-OFF IS CREATED DURING CONSTRUCTION, THE SUBCONTRACTOR SHALL INITIATE PROTECTIVE ACTION IN ACCORDANCE WITH THE PROJECT REQUIREMENTS. THIS WORK SHALL BE CONSIDERED INCIDENTAL TO THE COMPLETION OF THE PROJECT AND NO SEPARATE MEASUREMENT OR PAYMENT WILL BE MADE THEREFOR.

EROSION CONTROL AND ENVIRONMENTAL PROTECTION:

1. THE SUBCONTRACTOR SHALL CONFORM TO ALL LOCAL AND FEDERAL DUST AND EROSION CONTROL REGULATIONS. THE SUBCONTRACTOR SHALL PREPARE AND OBTAIN ANY DUST CONTROL OR EROSION CONTROL PERMITS FROM THE REGULATORY AGENCIES.
2. THE SUBCONTRACTOR SHALL SECURE NPDES PERMITS REQUIRED BY APPLICABLE LOCAL, STATE, AND FEDERAL REGULATIONS.
3. THE SUBCONTRACTOR SHALL PROMPTLY REMOVE ANY MATERIAL EXCAVATED WITHIN THE PUBLIC RIGHT-OF-WAY OR ADJACENT PROPERTY TO KEEP IT FROM WASHING OFF THE PROJECT SITE.
4. THE SUBCONTRACTOR SHALL INSTALL ANY TEMPORARY DRAINAGE CONTROL MEASURES NECESSARY TO SAFELY CONVEY STORM WATER RUNOFF TO EXISTING OUTFALLS. SUBCONTRACTOR SHALL ENSURE THAT NO SOIL ERODES FROM THE SITE ONTO ADJACENT PROPERTY BY IMPLEMENTATION OF BMPs AS IDENTIFIED IN THE PROJECT SWPPP (OR LIMITS OF CONSTRUCTION IF DESIGNATED) AND WETTING SOIL TO PREVENT IT FROM BLOWING. ANY DAMAGE TO PRIVATE PROPERTY OR IMPROVEMENTS CONSTRUCTED BY THE SUBCONTRACTOR RESULTING FROM STORM WATER FLOWS SHALL BE THE SOLE RESPONSIBILITY OF THE SUBCONTRACTOR.
5. WATERING, AS REQUIRED FOR CONSTRUCTION DUST CONTROL, SHALL BE CONSIDERED INCIDENTAL TO CONSTRUCTION AND NO SEPARATE MEASUREMENT OR PAYMENT WILL BE MADE. CONSTRUCTION AREAS SHALL BE WATERED FOR DUST CONTROL IN COMPLIANCE WITH PROJECT SWPPP ORDINANCES. THE SUBCONTRACTOR SHALL COORDINATE WITH THE OWNER FOR WATER AVAILABILITY AND USE. THE SUBCONTRACTOR SHALL SUPPLY ALL EQUIPMENT AND MATERIALS NECESSARY FOR PROVIDING WATER.
6. ANY AREAS DISTURBED BY CONSTRUCTION AND NOT IDENTIFIED FOR SPECIFIC PERMANENT TREATMENT BY THE PROJECT LANDSCAPING PLAN OR IMPERVIOUS SURFACES ON THE SITE PLAN SHALL BE REVEGETATED WITH NATIVE PERENNIAL VEGETATION. SUBCONTRACTOR SHALL COORDINATE SPECIFIC TREATMENT WITH THE ENGINEER. SITE STABALIZATION SHALL BE IMPLEMENTED PER THE NPDES CONSTRUCTION GENERAL PERMIT REQUIREMENTS IDENTIFIED IN THE PROJECT SWPPP.
7. ALL WASTE PRODUCTS FROM THE CONSTRUCTION SITE, INCLUDING ITEMS DESIGNED FOR REMOVAL, CONSTRUCTION WASTE, CONSTRUCTION EQUIPMENT WASTE PRODUCTS (OIL, GAS, TIRES, ETC.), GARBAGE, GRUBBING, EXCESS CUT MATERIAL, VEGETATIVE DEBRIS, ETC. SHALL BE APPROPRIATELY DISPOSED OF OFFSITE AT NO ADDITIONAL COST TO THE OWNER. THE SUBCONTRACTOR SHALL BE RESPONSIBLE FOR OBTAINING ALL PERMITS REQUIRED FOR HAUL OR DISPOSAL OF WASTE PRODUCTS, AND TO ENSURE THAT THE WASTE DISPOSAL SITE COMPLIES WITH GOVERNMENT REGULATIONS REGARDING THE ENVIRONMENT, ENDANGERED SPECIES, AND ARCHAEOLOGICAL RESOURCES.
8. ALL EXCAVATED MATERIAL THAT IS NOT REQUIRED TO BE REUSED MUST BE REMOVED FROM THE PROJECT AREA WITHIN A TIMELY MANNER AS APPROVED BY ENGINEER. SPOIL PILES WILL BE ALLOWED ONLY AS DIRECTED BY THE ENGINEER AND LOS ALAMOS NATIONAL LABORATORY.
9. THE SUBCONTRACTOR SHALL BE RESPONSIBLE FOR THE CLEANUP AND REPORTING OF SPILLS OF HAZARDOUS MATERIALS ASSOCIATED WITH THE CONSTRUCTION SITE. HAZARDOUS MATERIALS, INCLUDES GASOLINE, DIESEL FUEL, MOTOR OIL, SOLVENTS, CHEMICALS, PAINT, ETC. WHICH MAY BE A THREAT TO THE ENVIRONMENT. THE SUBCONTRACTOR SHALL REPORT THE DISCOVERY OF PAST OR PRESENT SPILLS TO PROJECT SUBCONTRACTOR TECHNICAL REPRESENTATIVE (STR) IN ACCORDANCE WITH LANL REQUIREMENTS.
10. THE SUBCONTRACTOR SHALL PROPERLY HANDLE AND DISPOSE OF ALL ASPHALT REMOVED ON THE PROJECT BY HAULING TO AN APPROVED DISPOSAL SITE IN ACCORDANCE WITH THE REQUIREMENTS OF THE NEW MEXICO SOLID WASTE ACT.
11. THE SUBCONTRACTOR SHALL COMPLY WITH ALL APPLICABLE REGULATIONS CONCERNING CONSTRUCTION NOISE AND HOURS OF OPERATION AS STATED IN THE SPECIFICATIONS.
12. THE SUBCONTRACTOR SHALL COMPLY WITH ALL APPLICABLE REGULATIONS CONCERNING SURFACE AND UNDERGROUND WATER, CONTACT WITH SURFACE WATER BY CONSTRUCTION EQUIPMENT AND PERSONNEL SHALL BE MINIMIZED, EQUIPMENT MAINTENANCE AND REFUELING OPERATIONS SHALL BE PERFORMED IN AN ENVIRONMENTALLY SAFE MANNER IN COMPLIANCE WITH PROJECT SWPPP.
13. BMPs IN ACCORDANCE WITH THE PROJECT SWPPP WILL BE INSTALLED PRIOR TO ANY SOIL DISTURBING ACTIVITIES.
14. ALL RIPRAP MATERIAL USED ON THIS PROJECT SHALL BE A NATURAL ROCK MATERIAL CONFORMING TO THE SIZE AND MATERIAL PROPERTY REQUIREMENTS SET FORTH IN THE PROJECT SPECIFICATIONS.
15. SITE STABILIZATION SHALL BE IMPLEMENTED PER NPDES CONSTRUCTION GENERAL PERMIT REQUIREMENTS IDENTIFIED IN THE SWPPP.

CONSTRUCTION LIMITS:

1. SUBCONTRACTOR SHALL WORK WITHIN THE CONSTRUCTION LIMITS AS SHOWN ON THE PLANS. EQUIPMENT TRAFFIC OUTSIDE THESE LIMITS SHALL NOT BE PERMITTED WITHOUT WRITTEN PERMISSION OF THE ENGINEER.
2. PRIOR TO BEGINNING ANY CONSTRUCTION ACTIVITIES WITHIN ADJACENT RIGHT-OF-WAY OR WITHIN PROPERTY NOT OWNED BY THE OWNER OF THE PROJECT SITE, THE SUBCONTRACTOR SHALL OBTAIN ALL PERMITS AND PERMISSIONS IN WRITING.
3. OVERNIGHT PARKING OF CONSTRUCTION VEHICLES ON PRIVATE PROPERTY IS THE SOLE RESPONSIBILITY OF THE SUBCONTRACTOR.
4. SUBCONTRACTOR SHALL PARK EQUIPMENT AND VEHICLES SO AS NOT TO INTERFERE WITH NORMAL ACTIVITIES OF THE EXISTING FACILITIES.

DEMOLITION:

1. THE OWNER HAS THE FIRST RIGHT TO SALVAGE ANY ITEMS IDENTIFIED FOR DEMOLITION. PRIOR TO DEMOLITION SUBCONTRACTOR SHALL COORDINATE WITH OWNER TO IDENTIFY ITEMS TO BE SALVAGED. SUBCONTRACTOR SHALL REMOVE AND PLACE SALVAGED ITEMS IN OWNERS DESIGNATED AREA ONSITE. SUBCONTRACTOR SHALL EXERCISE DUE CARE NOT TO DAMAGE ITEMS WHICH ARE TO BE SALVAGED TO THE OWNER.
2. REMOVE ALL CONDUIT, CONTROL PANELS, CONTROL WIRING AND APPURTENANCES ASSOCIATED WITH EQUIPMENT TO BE REMOVED
3. REMOVE EQUIPMENT PADS, MOUNTINGS AND PIPE SUPPORTS IF PRESENT
4. GRING ATTACHMENT BOLTS FLUSH WITH CONCRETE.
5. PATCH CONCRETE IN ACCORDANCE WITH SPECIFICATIONS
6. DO NOT DAMAGE EXISTING STRUCTURES WHICH REMAIN

GENERAL UTILITIES:

1. ANY UTILITY LINES, PIPELINES, OR UNDERGROUND UTILITY LINES SHOWN ON THE PLANS ARE SHOWN IN AN APPROXIMATE LOCATION ONLY BASED ON THE INFORMATION PROVIDED TO THE ENGINEER BY OTHERS THAT MAY BE INACCURATE OR INCOMPLETE. ADDITIONALLY, UNDERGROUND LINES MAY EXIST THAT ARE NOT SHOWN. THE SUBCONTRACTOR SHALL VERIFY THE LOCATION OF ANY UTILITY LINE, PIPELINE, OR UNDERGROUND UTILITY LINE IN OR NEAR THE AREA OF THE WORK, WHICH SHALL BE CONSIDERED INCIDENTAL TO COST OF COMPLETING CONSTRUCTION RELATED WORK. ANY DAMAGE TO ANY OTHER UTILITIES OR COLLATERAL DAMAGE CAUSED BY THE SUBCONTRACTOR SHALL BE THE FULL RESPONSIBILITY OF THE SUBCONTRACTOR.
2. SUBCONTRACTOR SHALL EXERCISE DUE CARE TO AVOID DISTURBING ANY EXISTING UTILITIES, ABOVE OR BELOW GROUND. UTILITIES THAT ARE DAMAGED BY CONSTRUCTION ACTIVITIES SHALL BE REPAIRED OR REPLACED AT THE SUBCONTRACTOR'S EXPENSE. SUBCONTRACTOR SHALL COORDINATE WITH UTILITY COMPANIES TO PREVENT DISRUPTION TO SERVICE.
3. ALL UTILITY LINES NOT SPECIFICALLY DESIGNATED TO BE REMOVED AND REPLACED ON THE PLANS, SHALL BE MAINTAINED IN SERVICE. SHORING, SHEETING AND OTHER MEANS OF SUPPORT SHALL BE EMPLOYED BY THE SUBCONTRACTOR TO PREVENT DAMAGE OR LOSS OF THESE EXISTING UTILITIES. BEAM AND CABLE OR OTHER ADEQUATE SUPPORTS SHALL BE USED FOR TEMPORARY SUPPORT OF ALL UTILITY LINES AS NECESSARY.
4. SUBCONTRACTOR SHALL PROVIDE A UTILITY SUPPORT DESIGN FOR ALL LARGE AND/OR CRITICAL SERVICES (E.G. COMMUNICATIONS AND ELECTRIC DUCT BANKS, EXPOSED GRAVITY LINE JOINTS, PRESSURIZED WATER LINES, SEWER FORCE MAINS, ETC.). SUPPORT FOR THESE CRITICAL SERVICES SHALL BE DESIGNED AND SEALED BY REGISTERED PROFESSIONAL ENGINEER AND SUBMITTED TO OWNER FOR APPROVAL. THE DESIGN AND INSTALLATION OF BOTH CRITICAL AND NONCRITICAL SUPPORTS SHALL BE PERFORMED AT THE SUBCONTRACTOR'S EXPENSE. ANY DAMAGE TO EXISTING UTILITIES SHALL PROMPTLY BE REPAIRED AT THE SUBCONTRACTOR'S EXPENSE. THE SUBCONTRACTOR SHALL NOTIFY THE ENGINEER IMMEDIATELY OF ANY SIGNIFICANT DEVIATION OF EXPOSED UTILITIES FROM THE LOCATIONS SHOWN ON THE PLANS SO THAT CONFLICTS CAN BE RESOLVED IN A TIMELY MANNER.
5. SUBCONTRACTOR SHALL COORDINATE WITH PERTINENT UTILITY COMPANIES OF ALL EXISTING UTILITY LINES AND APPURTENANCES ENCOUNTERED DURING CONSTRUCTION THAT REQUIRE RELOCATION. NO ADDITIONAL COMPENSATION WILL BE ALLOWED FOR DELAYS OR INCONVENIENCES CAUSED BY UTILITY COMPANY WORK CREWS. THE SUBCONTRACTOR SHALL RESCHEDULE HIS ACTIVITIES AS NECESSARY TO ALLOW UTILITY CREWS TO PERFORM THEIR REQUIRED WORK.
6. PRIOR TO CONSTRUCTION, THE SUBCONTRACTOR SHALL EXCAVATE AND FIELD VERIFY THE HORIZONTAL AND VERTICAL LOCATIONS OF ALL POTENTIAL CONFLICTING UTILITIES AT NO ADDITIONAL COST TO THE OWNER. SHOULD A CONFLICT EXIST BETWEEN THE FIELD INFORMATION AND THE PLANS, THE SUBCONTRACTOR SHALL NOTIFY THE ENGINEER SO THE CONFLICT CAN BE RESOLVED WITH MINIMUM DELAY. SUBCONTRACTOR SHALL USE VACUUM EXCAVATION TECHNIQUES FOR ALL INITIAL TRENCHING OPERATIONS TO LOCATE AND VERIFY ALL EXISTING UTILITIES. THE COST OF VACUUM EXCAVATION SHALL BE CONSIDERED INCIDENTAL TO THE COST OF ALL TRENCH EXCAVATION WORK.
7. ALL INTERFERING PORTIONS OF ABANDONED UTILITY LINES WHICH ARE EXPOSED AS A RESULT OF CONSTRUCTION SHALL BE IMMEDIATELY REPORTED TO LOS ALAMOS NATIONAL LABORATORY.
8. SUBCONTRACTOR SHALL COORDINATE ANY REQUIRED UTILITY INTERRUPTIONS WITH THE AFFECTED UTILITY COMPANY A MINIMUM OF THREE WORKING DAYS BEFORE THE INTERRUPTION.
9. EXISTING VALVES SHALL ONLY BE OPERATED BY THE APPROPRIATE UTILITY COMPANY. SUBCONTRACTOR SHALL NOTIFY THE UTILITY A MINIMUM OF SEVEN (7) WORKING DAYS BEFORE ANY VALVE, NEW OR EXISTING, NEEDS TO BE OPERATED.
10. ANY DAMAGE TO THE EXISTING FACILITIES (CURB & GUTTER, PAVEMENT, CONDUITS, LANDSCAPING, UTILITY LINES, ETC.) DURING CONSTRUCTION SHALL BE REPLACED AT THE SUBCONTRACTORS' EXPENSE.

LANL BUILDING OFFICIAL — SIG: [signature] — #: 11913 — DATE: 11-17-11 — 11-106 — APPROVED

REVIEWED FOR LANL STANDARDS COMPLIANCE PER ISD 341-2, CH. 16

CHRIS RODRIGUEZ — NEW MEXICO — 16239 — LICENSED PROFESSIONAL ENGINEER — 9/22/11

NO	DATE	CLASS REV	DESCRIPTION	DWN	VER	CHKD	SUB	APP

HDR ENGINEERING INC.
2155 LOUISIANA BLVD., NE
SUITE 9500
ALBUQUERQUE, NM 87110
MAIN: (505) 830-5400 FAX: (505) 830-5454

SERF EXPANSION

GENERAL NOTES

BLDG. TA-

DRAWN	B.F. GWB
DESIGN	W.C. GWB
CHECKED	E.D. GWB
DATE	10-24-11

SUBMITTED [signature] APPROVED FOR RELEASE [signature]

Los Alamos NATIONAL LABORATORY
PO Box 1663
Los Alamos, New Mexico 87545

SHEET C-0001
2 OF 67

CLASSIFICATION UNCLASSIFIED REVIEWER [signature] DATE 11/7/11

PROJECT ID 102310 DRAWING NO C-55752 REV 0

ECN-11-TA-03-1398-0000-0265

C:\pwworking\phx\d0224116\102310-C-0001-R0.dwg, Oct 24, 2011 @ 4:01pm

ENV-RCRA-12-0059 ENCLOSURE 2 LAUR-12-10463

ABBREVIATIONS (NOT ALL ABBREVIATIONS WILL APPLY TO THIS PROJECT)

A	AIR LINE	OC	ON CENTER
AL	ALUMINUM	OD	OUTSIDE DIAMETER
APPROX.	APPROXIMATE	OP	OVERHEAD POWER
BD	BLOWDOWN	P	PIPE
BLDG.	BUILDING	PC	POINT OF CURVATURE
C	COMMUNICATION LINE	PCC	PORTLAND CEMENT CONCRETE
CB	CATCH BASIN (DROP INLET)	PE/POLY	POLYETHYLENE
CI	CAST IRON	PVC	POLY VINYL CHLORIDE
CINT	CENTER FOR INTEGRATED NANOTECHNOLOGIES	PI	POINT OF INTERSECTION
C&G	CURB AND GUTTER	PIV	POST INDICATOR VALVE
CLR	CLEAR	PSI	POUND PER SQUARE INCH
CONC	CONCRETE	PP	POWER POLE
CONST	CONSTRUCTION	PRV	PRESSURE RELIEF VALVE
CCP	CONCRETE CYLINDER PIPE	PLS	PURE LIVE SEED
CT	COOLING TOWER	PB	PULL BOX
CTR	COOLING TOWER RETURN	PT	POINT OF TANGENCY
CTS	COOLING TOWER SUPPLY	RAD	RADIUS
CU	COPPER	RAW	RADIOACTIVE INDUSTRIAL WASTE
CW	CHILLED WATER	RFP	REQUEST FOR PROPOSAL
CMP	CORRUGATED METAL PIPE	RGLTR	REGULATOR
DIA	DIAMETER	RD	ROOF DRAIN
DI	DROP INLET (CATCH BASIN)	RLW	RADIOACTIVE LIQUID WASTE
E	ELECTRIC LINE	S/C	STEAM AND CONDENSATE
EFF	EFFLUENT	SD	STORM DRAIN
EW	EACH WAY	SS	SANITARY SEWER
EB	ELECTRIC BOX	SS FM	SANITARY SEWER FORCE MAIN
ELEC	ELECTRICAL	SCHED	SCHEDULE
EP	ELECTRICAL PROTECTION	SHT	SHEET
EL	ELEVATION	STA	STATION
EXIST	EXISTING	STL	STEEL
EG	EXISTING GRADE	STS	STORM SEWER
FFE	FINISHED FLOOR ELEVATION	SW	SIDEWALK
FN	FENCE	T	TELEPHONE LINE
FF	FINISH FLOOR	TA	TOP OF ASPHALT / PAVEMENT
FG	FINISH GRADE	TC	TOP OF CONCRETE
FLG	FLANGE	TG	TOP OF GROUND / GRATE
FLR	FLOOR	TOC	TOP OF CURB
FPW/FP	FIRE PROTECTION WATERLINE	TU/TEL	TELEPHONE
FT	FOOT	TW	TOP OF WALL
FM	FORCE MAIN	T/P	TOP OF PIPE
GPM	GALLONS PER MINUTE	T/C	TOP OF COMMUNICATION LINE
GALV	GALVANIZED	TYP	TYPICAL
G	GAS	VCP	VITRIFIED CLAY PIPE
GND	EXISTING GROUND	WTR/W	WATER
HC	HANDICAPPED	WL/W	WATERLINE
HDPE	HIGH DENSITY POLYETHYLENE	YL	YARD LIGHT
HPT	HIGH POINT	XING	CROSSING
HWL	HIGH WATER LEVEL		
HORIZ	HORIZONTAL		
HP	HORSE POWER		
ID	INSIDE DIAMETER		
INV	INVERT		
IB	IRRIGATION VALVE BOX		
IRW	IRRIGATION WATER LINE		
L	LABNET		
LANL	LOS ALAMOS NATIONAL LABORATORY		
LB	POUND		
LEN	LENGTH		
LF	LINEAR FOOT		
LPT	LOW POINT		
MFG.	MANUFACTURER		
MAX	MAXIMUM		
MH	MANHOLE		
MJ	MECHANICAL JOINT		
MIN	MINIMUM		
MSTOB	MATERIAL SCIENCE & TECHNOLOGY OFFICE BUILDING		
NC	NORMALLY CLOSED		
NA	NOT APPLICABLE		
NO	NUMBER		

EXISTING FEATURES LEGEND

- EXISTING TO BE REMOVED
- ASPHALT REMOVAL
- W — EXISTING WATERLINE
- SS — EXISTING SANITARY SEWER
- STS — EXISTING STORM SEWER
- T — EXISTING TELECOMMUNICATION LINE
- E — EXISTING ELECTRICAL LINE
- S/C — EXISTING STEAM & CONDENSATE LINE
- RAW — EXISTING RADIOACTIVE WASTE LINE
- G — EXISTING GAS LINE
- SD — EXISTING STORM DRAIN MANHOLE
- EXISTING STORM DRAIN INLET
- EXISTING STORM DRAIN PIPE FLARED END SECTION
- 81 — EXISTING 1' CONTOUR
- 7380 — EXISTING 5' CONTOUR
- EXISTING WATER VALVE
- EXISTING FIRE HYDRANT
- S — EXISTING SANITARY SEWER MANHOLE
- EXISTING SANITARY SEWER CLEANOUT
- T — EXISTING TELECOMMUNICATION MANHOLE
- E — EXISTING ELECTRICAL MANHOLE
- 2002 — EXISTING BUILDING FOOTPRINT
- EXISTING TREE

PROPOSED FEATURES LEGEND

- W — PROPOSED WATERLINE
- FP — FIRE PROTECTION LINE
- SS — PROPOSED SANITARY SEWER LINE
- STS — PROPOSED STORM SEWER LINE
- T — PROPOSED TELECOMMUNICATION LINE
- E — PROPOSED ELECTRICAL LINE
- S/C — PROPOSED STEAM AND CONDENSATE LINE
- WATER VALVE
- REDUCER
- PIV
- FIRE HYDRANT
- DROP INLET
- FLARED END SECTION
- RIP RAP
- CMP COLLAR
- STANDARD CURB & GUTTER
- EDGE OF ASPHALT
- FFE = 82.00 — BUILDING FOOTPRINT
- BOLLARDS
- HANDICAPPED PARKING SPACE
- NEW ASPHALT
- NEW CONCRETE
- FLOW ARROW

NO	DATE	CLASS REV	DESCRIPTION	DWN	VER	CHKD	SUB	APP

HDR ENGINEERING INC.
2155 LOUISIANA BLVD., NE
SUITE 9500
ALBUQUERQUE, NM 87110
MAIN: (505) 830-5400 FAX:
(505) 830-5454

LANL BUILDING OFFICIAL — APPROVED — REVIEWED FOR LANL STANDARDS COMPLIANCE PER DB 241 - 2 CH 18

CHRIS RODRIGUEZ — NEW MEXICO — 16238 — LICENSED PROFESSIONAL ENGINEER — 9/22/11

SERF EXPANSION

LEGEND AND ABBREVIATIONS

DRAWN	B.F.	GVR
DESIGN	W.C.	GVR
CHECKED	E.D.	GVR
DATE	10-24-11	

BLDG. TA-

SUBMITTED

APPROVED FOR RELEASE

Los Alamos NATIONAL LABORATORY
PO Box 1663
Los Alamos, New Mexico 87545

SHEET C-0002

3 OF 67

CLASSIFICATION UNCLASSIFIED ~~UNCLASSIFIED~~ ANSWER DATE 11/7/11

PROJECT ID 102310

DRAWING NO C-55752

REV 0

ECN-11-TA-03-1398-0000-0265

C:\pwworking\ph\d0224116\102310-C-0002-R0.dwg, Oct 24, 2011 @ 4:01pm

ENV-RCRA-12-0059

ENCLOSURE 2

LAUR-12-10463

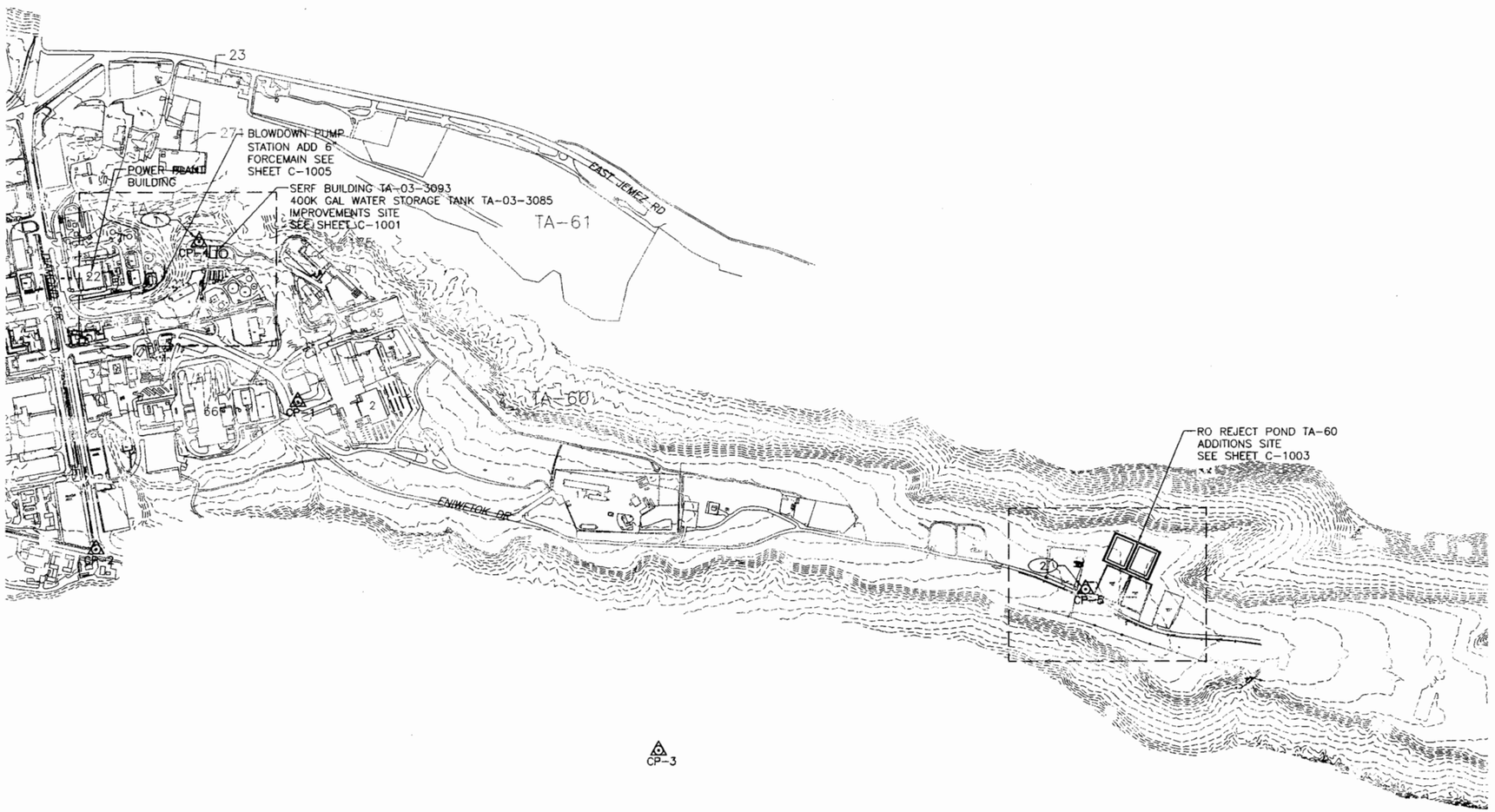

SITE AND SURVEY CONTROL PLAN

0 400' 800'
1"=400'-0"

SURVEY CONTROL POINTS

CP-1 = LANL MONUMENT CALIBRATED A0308
N=1772653.20
E=1620942.17
Z=7368.00

CP-2 = LANL MONUMENT A0306
N=1771637.23
E=1619555.72
Z=7400.98

CP-3 = LANL MONUMENT A4801-CHECK
N=1770252.42
E=1623423.63
Z=7326.61

CP-4 = BENCHMARK SET NO. 4 REBAR
N=1771356.60
E=1626380.43
Z=7276.01

CP-5 = BENCHMARK NO. 4FD
N=1773752.20
E=1620260.89
Z=7308.25

GENERAL NOTES:

1. IF THIS SHEET IS NOT 24"X36" THEN IT IS A REDUCED SIZE PLOT. USE GRAPHIC SCALE ACCORDINGLY.
2. HORIZONTAL CONTROL IS BASED ON NAD83 CENTRAL ZONE NEW MEXICO STATE PLANE COORDINATES. ELEVATION IS BASED ON LANL MONUMENT A0308. ELEVATION MEASURED 7367.82' CALIBRATED FROM EXISTING LANL CONTROL:

   A0308 COORDINATE – N=1772653.1990, E=1620942.1730, CSF=0.99956 GRID
3. SURVEY CONTROL PROVIDED BY:
   SALVADOR I. VIGIL, RLS
   LAND SURVEYING COMPANY, LLC
   PO BOX 4384
   SANTA FE, NM 87502
4. EXISTING TOPOGRAPHY, FACILITIES, AND UTILITIES SHOWN ARE BASED ON MAPPING PROVIDED BY LANL. VERIFY EXISTING CONDITIONS PRIOR TO BEGINNING CONSTRUCTION ACTIVITIES FOR COORDINATION AND FIELD ADJUSTMENTS AS REQUIRED.

KEYED NOTES:

1. ELEVATION DATUM BASED ON LANL MONUMENT A0308 ELEVATION = 7367.82'.
2. ELEVATION DATUM BASED ON BENCHMARK AT THE SOUTHWEST CORNER OF PROPERTY AS DEPICTED. ELEVATION = 7276.01' TOP OF REBAR.

NO	DATE	CLASS REV	DESCRIPTION	DWN	VER	CHKD	SUB	APP

HDR ENGINEERING INC.
2155 LOUISIANA BLVD., NE
SUITE 9500
ALBUQUERQUE, NM 87110
MAIN: (505) 830-8400 FAX: (505) 830-5654

SERF EXPANSION

OVERALL SITE AND SURVEY PLAN

BLDG. TA-

DRAWN	B.F.	
DESIGN	W.C.	
CHECKED	E.D.	
DATE	10-24-11	

SUBMITTED

APPROVED FOR RELEASE

Los Alamos NATIONAL LABORATORY
PO Box 1663
Los Alamos, New Mexico 87545

SHEET C-1000
4 OF 67

CLASSIFICATION UNCLASSIFIED REVIEWER DATE 6/2/11

PROJECT ID	DRAWING NO	REV
102310	C-55752	0

ECN-11-TA-03-1398-0000-0265

LANL BUILDING OFFICIAL APPROVED 119113 11-17-11 11-106

REVIEWED FOR LANL STANDARDS COMPLIANCE PER 130-34-1, CP-18

CHRIS RODRIGUEZ NEW MEXICO 16239 PROFESSIONAL ENGINEER 9/22/11

C:\pwworking\phx\d0224116\102310-C-1000-R0.dwg, Oct 24, 2011 @ 4:04pm

ENV-RCRA-12-0059

ENCLOSURE 2

LAUR-12-10463

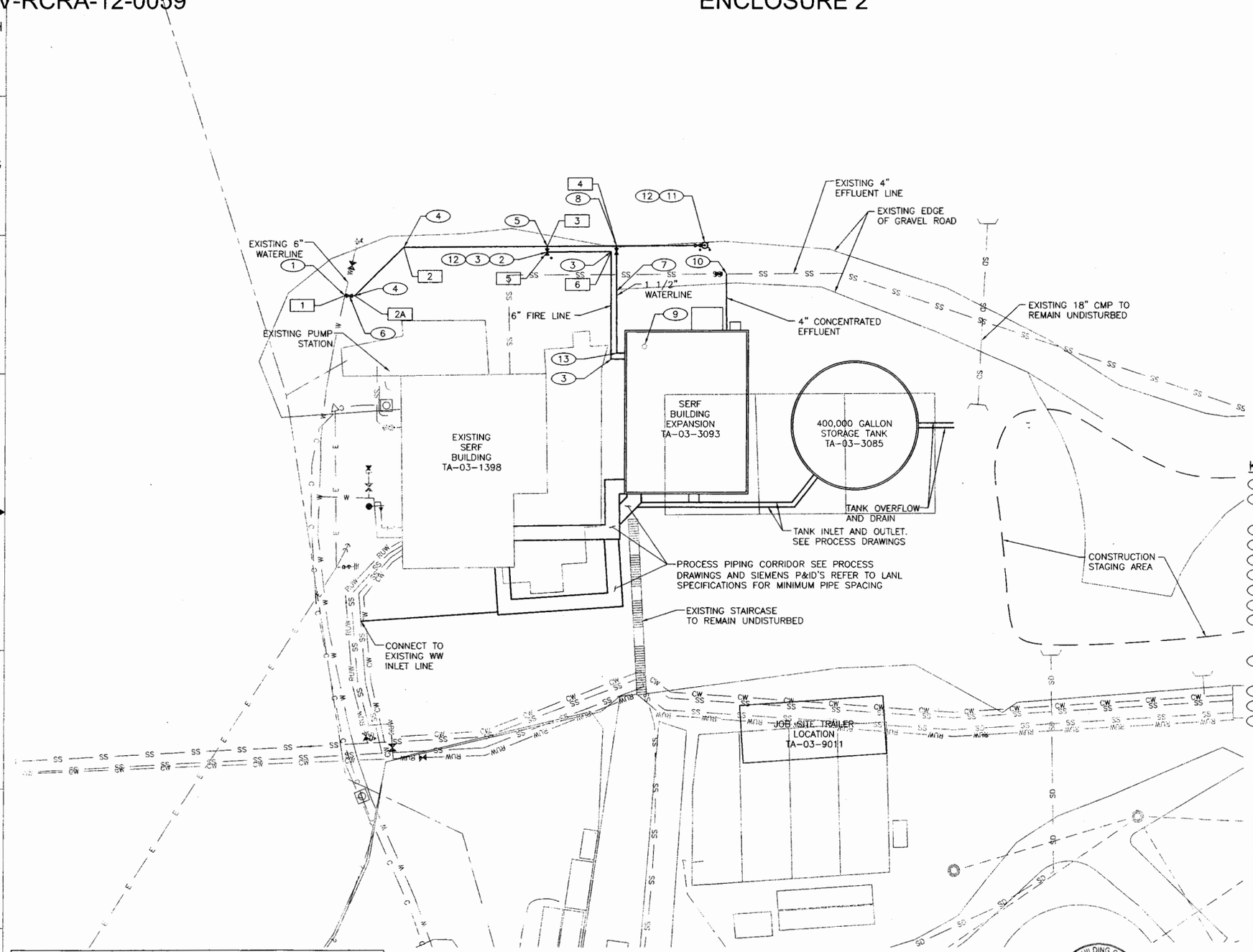

SITE AND PIPING PLAN

1"=20'-0"

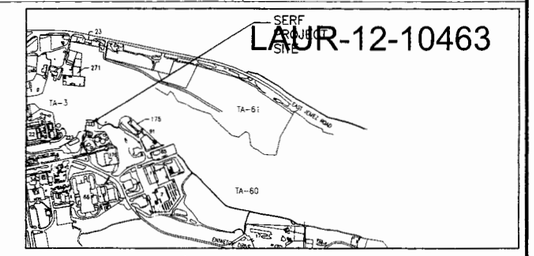

KEY PLAN

SCALE: NONE

GENERAL NOTES:

1. IF THIS SHEET IS NOT 24"X36", THEN IT IS A REDUCED SIZE PLOT. USE GRAPHIC SCALE ACCORDINGLY.
2. SUBCONTRACTOR TO DEFLECT PIPE JOINTS AS NECESSARY. DO NOT EXCEED MANUFACTURER'S RECOMMENDATIONS FOR PIPE JOINT DEFLECTION.
3. SEE PROCESS SHEETS FOR BUILDING TIE-INS.
4. SUBCONTRACTOR TO UTILIZE BEST MANAGEMENT PRACTICES DETAILED IN THE STORMWATER POLLUTION PREVENTION PLAN (SWPPP) FOR ALL SOIL DISTURBANCE. SEE LANL SPECIFICATION SECTION 01 5705 FOR ADDITIONAL REQUIREMENTS.
5. SUBCONTRACTOR SHALL RESTORE ALL DISTURBED AREAS TO ORIGINAL CONDITIONS AND REVEGETATE APPLICABLE AREAS IN ACCORDANCE WITH LANL SPECIFICATION 32 9219.
6. EXISTING TOPOGRAPHY, FACILITIES, AND UTILITIES SHOWN ARE BASED ON MAPPING PROVIDED BY LANL. VERIFY EXISTING CONDITIONS PRIOR TO BEGINNING CONSTRUCTION ACTIVITIES FOR COORDINATION AND FIELD ADJUSTMENTS AS REQUIRED.

KEYED NOTES:

1. CUT IN 6"x6"x6" TEE
2. 6" PVC WATERLINE FOR FIRE SUPRESSION SYSTEM. INSTALL POST INDICATOR VALVE. SEE DETAIL 6/C-5000.
3. 6" 90° WATERLINE BEND.
4. 6" 45° WATERLINE BEND.
5. 6"X6"X6" TEE.
6. 6" GATEVALVE WITH VALVE BOX. SEE DETAIL 3/C-5000.
7. 1 1/2" COPPER WATERLINE.
8. 1 1/2" TAP FOR WATER SERVICE WITH VALVE. SEE DETAIL 4/C-5000.
9. RELOCATE EXISTING CLEANOUT TO LOCATION OUTSIDE OF BUILDING CONSTRUCTION AREA TO THE WEST OR AS DIRECTRED BY LANL OPERATIONS STAFF.
10. CUT IN 4"x4"x4" TEE TO EXSITNG 4" SS CONCENTRATE LINE WITH ISOLATION VALVE TO WEST.
11. FIRE HYDRANT W/ GATEVALVE AND BOX. SEE DETAIL 3/C-5000.
12. BOLLARDS. SEE DETAIL 5/C-5001
13. 1 1/2" WATERLINE BEND.

POINT TABLE - SITE AND PIPING LAYOUT

POINT	NORTHING	EASTING
1	1773745.13	1620209.72
2	1773763.46	1620235.28
2A	1773744.74	1620213.83
3	1773759.77	1620294.72
4	1773758.00	1620323.25
5	1773757.46	1620294.58
6	1773755.80	1620320.84

NO	DATE	CLASS REV	DESCRIPTION	DWN	VER	CHKD	SUB	APP

HDR ENGINEERING INC.
2155 LOUISIANA BLVD., NE
SUITE 1500
ALBUQUERQUE, NM 87110
MAIN: (505) 830-5400 FAX: (505) 830-5454

SERF EXPANSION

SERF SITE AND PIPING PLAN

BLDG. 3093/3085 TA-03

DRAWN	B.F.
DESIGN	W.C.
CHECKED	E.D.
DATE	10-24-11

SUBMITTED

APPROVED FOR RELEASE

Los Alamos NATIONAL LABORATORY PO Box 1663 Los Alamos, New Mexico 87545

SHEET C-1001

5 OF 67

CLASSIFICATION UNCLASSIFIED REVIEWER DATE 11/7/11

PROJECT ID 102310

DRAWING NO C-55752

REV 0

LANL BUILDING OFFICIAL APPROVED 11/17/11

CHRIS RODRIGUEZ NEW MEXICO 16239 LICENSED PROFESSIONAL ENGINEER 9/22/11

REVIEWED FOR LANL STANDARDS COMPLIANCE PER ISD 341-2 CH 18

C:\pwworking\phx\d0224116\102310-C-1001-R0.dwg, Oct 24, 2011 @ 4:04pm

ECN-11-TA-03-1398-0000-0265

ENV-RCRA-12-0059

ENCLOSURE 2

LANL-12-10463

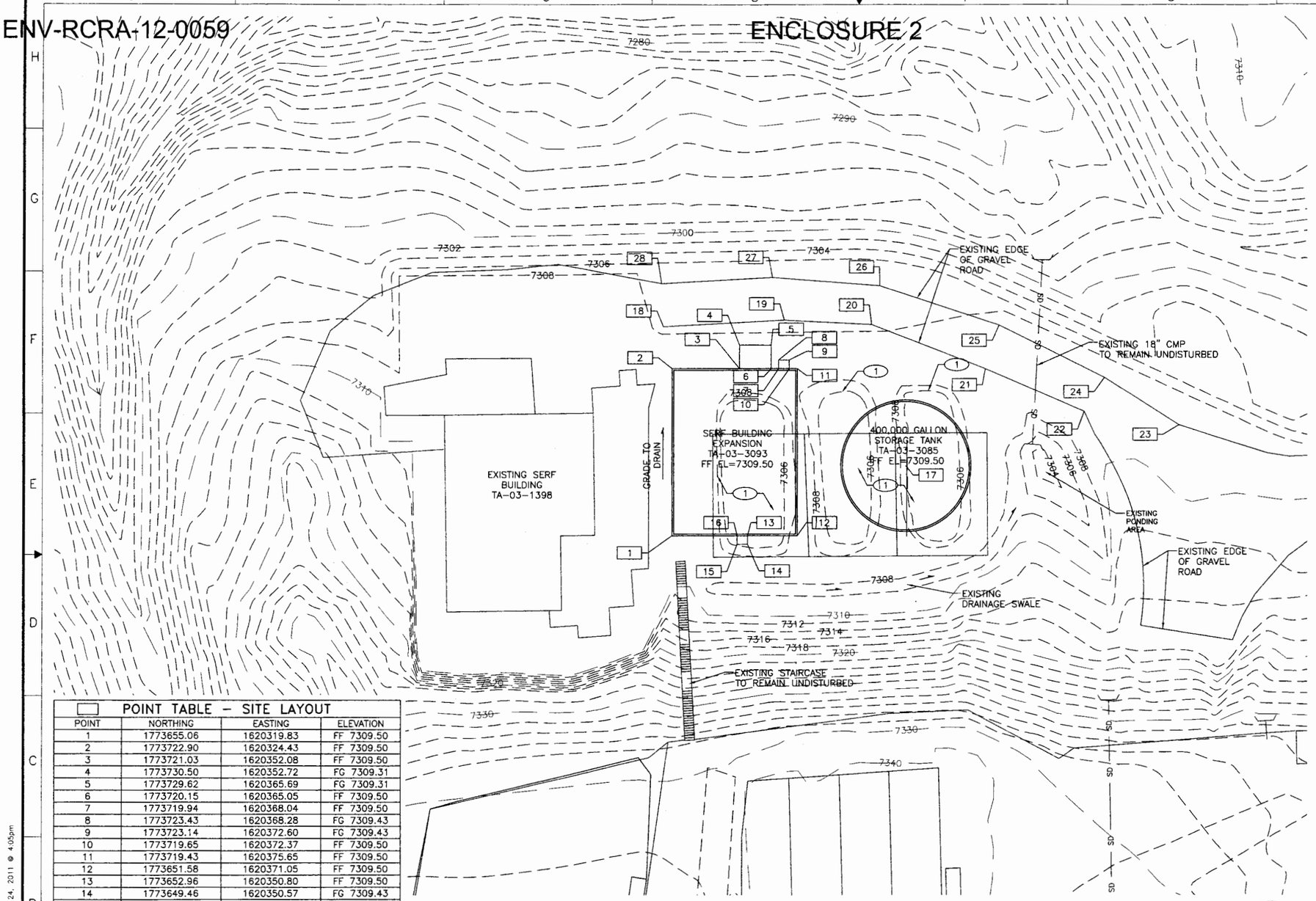

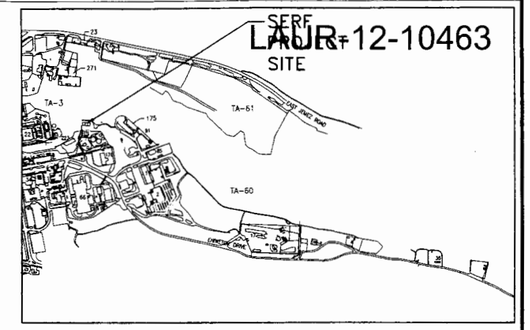

KEY PLAN
SCALE: NONE

GENERAL NOTES:

1. IF THIS SHEET IS NOT 24"X36", THEN IT IS A REDUCED SIZE PLOT. USE GRAPHIC SCALE ACCORDINGLY.
2. ALL EARTWHORK ACTIVITES SHALL BE CONDUCTED IN ACCORDANCE WITH LANL SPECIFICATION 31 2000.
3. SUBCONTRACTOR TO UTILIZE BEST MANAGEMENT PRACTICES DETAILED IN THE STORMWATER POLLUTION PREVENTION PLAN (SWPPP). SEE LANL SPECIFICATION SECTION 01 5705 FOR ADDITIONAL REQUIREMENTS.
4. SUBCONTRACTOR SHALL REVEGETATE ALL DISTURBED AREAS IN ACCORDANCE WITH LANL SPECIFICATION 32 9219.
5. EXISTING TOPOGRAPHY, FACILITIES, AND UTILITIES SHOWN ARE BASED ON MAPPING PROVIDED BY LANL. VERIFY EXISTING CONDITIONS PRIOR TO BEGINNING CONSTRUCTION ACTIVITIES FOR COORDINATION AND FIELD ADJUSTMENTS AS REQUIRED.

KEYED NOTES:

(1) FILL AND GRADE EXISTING ABANDONED SLUDGE DRYING BEDS. ALL DISTURBED SOILS FROM DRYING BEDS TO REMAIN ON-SITE.

POINT TABLE – SITE LAYOUT

POINT	NORTHING	EASTING	ELEVATION
1	1773655.06	1620319.83	FF 7309.50
2	1773722.90	1620324.43	FF 7309.50
3	1773721.03	1620352.08	FF 7309.50
4	1773730.50	1620352.72	FG 7309.31
5	1773729.62	1620365.69	FG 7309.31
6	1773720.15	1620365.05	FF 7309.50
7	1773719.94	1620368.04	FF 7309.50
8	1773723.43	1620368.28	FG 7309.43
9	1773723.14	1620372.60	FG 7309.43
10	1773719.65	1620372.37	FF 7309.50
11	1773719.43	1620375.65	FF 7309.50
12	1773651.58	1620371.05	FF 7309.50
13	1773652.96	1620350.80	FF 7309.50
14	1773649.46	1620350.57	FG 7309.43
15	1773649.76	1620346.24	FG 7309.43
16	1773653.25	1620346.48	FF 7309.50
17	1773676.96	1620417.37	FF 7309.50

ALL ELEVATIONS SHOWN ARE FINISH GRADE UNLESS OTHERWISE NOTED.

POINT TABLE – EXISTING EDGE OF ROAD

POINT	NORTHING	EASTING	ELEVATION
18	1773740.05	1620322.04	EG 7307.92
19	1773739.36	1620371.64	EG 7307.59
20	1773735.19	1620407.21	EG 7307.87
21	1773714.12	1620452.71	EG 7308.65
22	1773694.10	1620491.18	EG 7309.06
23	1773686.03	1620529.24	EG 7309.40
24	1773707.30	1620500.36	EG 7308.76
25	1773731.45	1620459.36	EG 7308.20
26	1773750.57	1620411.59	EG 7307.47
27	1773756.89	1620368.22	EG 7307.38
28	1773757.48	1620322.40	EG 7307.92

GRADING PLAN

1"=20'-0"

NO	DATE	CLASS REV	DESCRIPTION	DWN	VER	CHKD	SUB	APP

HDR ENGINEERING INC.
2155 LOUISIANA BLVD., NE
SUITE 9500
ALBUQUERQUE, NM 87110
MAIN: (505) 830-5400 FAX: (505) 830-5454

SERF EXPANSION

SERF GRADING PLAN

BLDG. 3093/3085 TA-03

DRAWN	B.F.
DESIGN	W.C.
CHECKED	E.O.
DATE	10-24-11

SUBMITTED

APPROVED FOR RELEASE

Los Alamos NATIONAL LABORATORY PO Box 1663 Los Alamos, New Mexico 87545

SHEET C-1002

6 OF 67

CLASSIFICATION UNCLASSIFIED REVIEWER DATE 11/7/11

PROJECT ID 102310 DRAWING NO C-55752 REV 0

LANL BUILDING OFFICIAL APPROVED 119113 11-17-11 11-106

REVIEWED FOR LANL STANDARDS COMPLIANCE PER ISD 341-2 CH 18

CHRIS RODRIGUEZ NEW MEXICO 16238 LICENSED PROFESSIONAL ENGINEER 9/22/11

ECN-11-TA-03-1398-0000-0265

C:\pwworking\phx\d0224116\102310-C-1002-R0.dwg, Oct 24, 2011 @ 4:05pm

ENV-RCRA-12-0059

ENCLOSURE 2

LAUR-12-10463

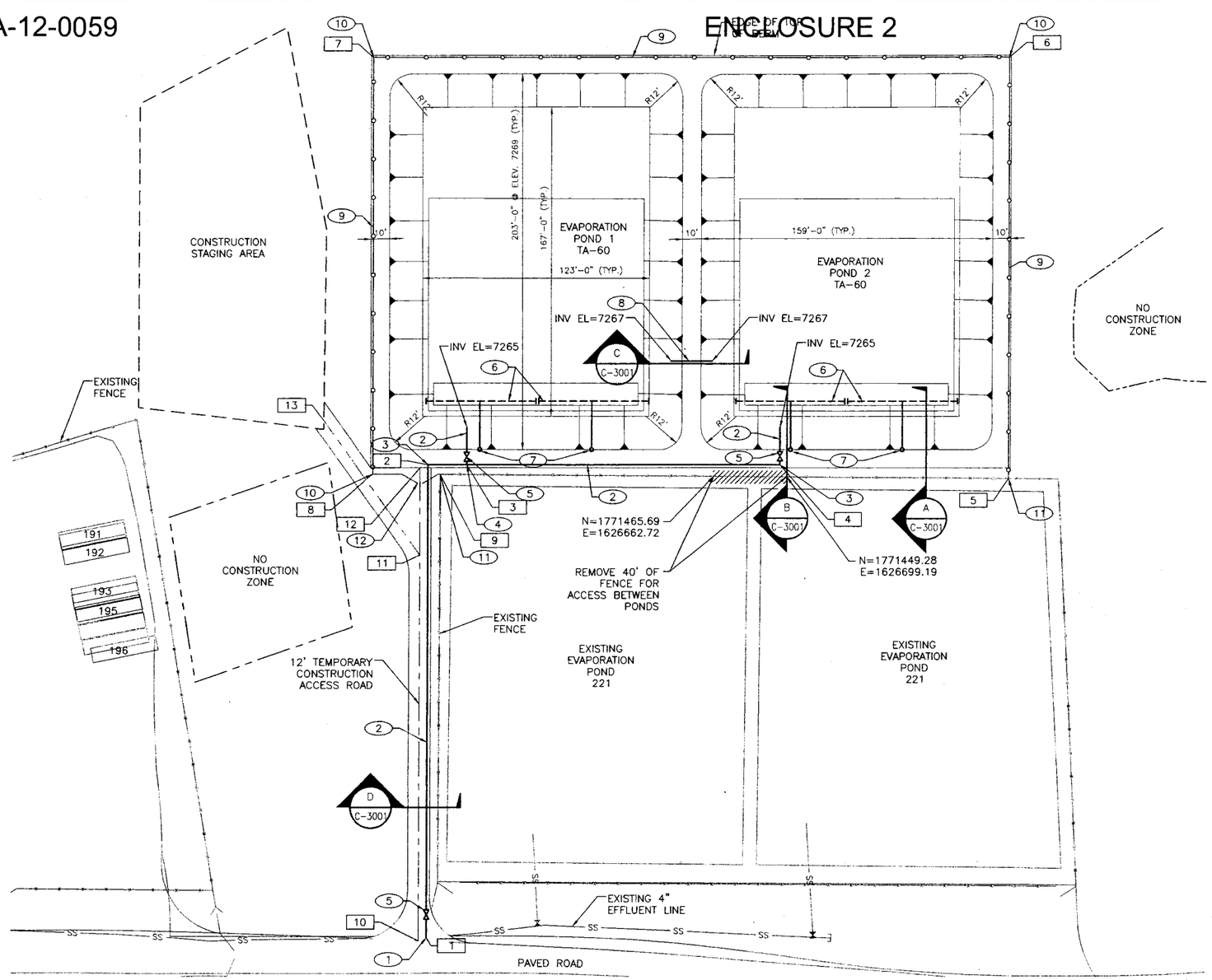

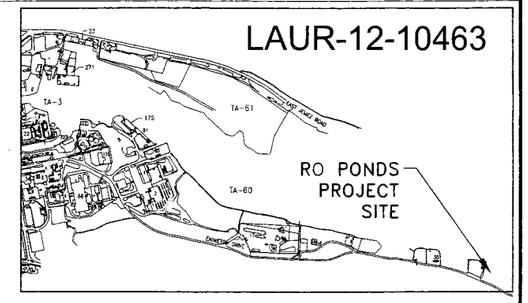

KEY PLAN
NO SCALE

GENERAL NOTES:

1. IF THIS SHEET IS NOT 24"X36", THEN IT IS A REDUCED SIZE PLOT. USE GRAPHIC SCALE ACCORDINGLY.
2. SUBCONTRACTOR TO DEFLECT PIPE JOINTS AS NECESSARY. DO NOT EXCEED MANUFACTURER'S RECOMMENDATIONS FOR PIPE JOINT DEFLECTION.
3. SUBCONTRACTOR TO UTILIZE BEST MANAGEMENT PRACTICES DETAILED IN THE STORMWATER POLLUTION PREVENTION PLAN (SWPPP) FOR ALL SOIL DISTURBANCE. SEE LANL SPECIFICATION SECTION 01 5705 FOR ADDITIONAL REQUIREMENTS.
4. SUBCONTRACTOR SHALL RESTORE ALL DISTURBED AREAS TO ORIGINAL CONDITIONS AND REVEGETATE APPLICABLE AREAS IN ACCORDANCE W/ LANL SPECIFICATION 32 9219.
5. EXISTING FACILITIES, AND UTILITIES SHOWN ARE BASED ON MAPPING PROVIDED BY LANL. VERIFY EXISTING CONDITIONS PRIOR TO BEGINNING CONSTRUCTION ACTIVITIES FOR COORDINATION AND FIELD ADJUSTMENTS AS REQUIRED.

KEYED NOTES:

1. BEGIN 4" EFFLUENT PIPELINE AT EXISTING EFFLUENT PIPELINE W/ 4"X4"X4" TEE.
2. 4" EFFLUENT PIPELINE.
3. 4" 90° PIPE BEND.
4. 4"X4"X4" TEE.
5. 4" GATE VALVE W/ VALVE BOX. SEE DETAIL 3/C-5000.
6. 4" PERFORATED LEAK DETECTION PIPE.
7. LEAK DETECTION RISER. SEE SECTION A/C-3001.
8. 8" PVC EQUALIZATION PIPE. SEE SECTION C/C-3001.
9. 8' CHAINLINK FENCE. SEE DETAIL 2/C-5001.
10. CHAINLINK FENCE CORNER POST. SEE DETAIL 2/C-5001.
11. CHAINLINK FENCE POST AND CONNECT EXISTING FENCE. SEE DETAIL 2/C-5001.
12. VEHICLE GATE AND LATCHING. SEE DETAIL 3/C-5001

POINT TABLE – PIPE NETWORK

POINT	NORTHING	EASTING
1	1771298.78	1626419.13
2	1771534.12	1626523.03
3	1771525.62	1626542.30
4	1771456.68	1626698.46

POINT TABLE – FENCE LAYOUT

POINT	NORTHING	EASTING
5	1771399.54	1626809.72
6	1771608.37	1626901.98
7	1771748.11	1626584.41
8	1771541.56	1626493.50
9	1771526.70	1626527.00

POINT TABLE – ACCESS ROAD ℄

POINT	NORTHING	EASTING
10	1771298.93	1626414.47
11	1771490.86	1626499.20
12	1771534.35	1626518.40
13	1771579.02	1626480.76

SITE AND PIPING PLAN
1"=30'-0"

NO	DATE	CLASS REV	DESCRIPTION	DWN	VER	CHKD	SUB	APP

HDR ENGINEERING INC.
2155 LOUISIANA BLVD., NE
SUITE 9000
ALBUQUERQUE, NM 87110
MAIN: (505) 830-5400 FAX: (505) 830-5454

SERF EXPANSION

RO REJECT EVAPORATION PONDS
SITE AND PIPING PLAN

BLDG. TA-60

DRAWN	B.F.
DESIGN	W.C.
CHECKED	E.D.
DATE	10-24-11

SUBMITTED
APPROVED FOR RELEASE

Los Alamos NATIONAL LABORATORY
PO Box 1663
Los Alamos, New Mexico 87545

SHEET C-1003
7 OF 67

CLASSIFICATION UNCLASSIFIED REVIEWER DATE 11-7-11

PROJECT ID	DRAWING NO	REV
102310	C-55752	0

LANL BUILDING OFFICIAL APPROVED 119113 11-17-11 11-106
REVIEWED FOR LANL STANDARDS COMPLIANCE PER ISO 241 - 2 CH. 10
CHRIS RODRIGUEZ NEW MEXICO 16239 LICENSED PROFESSIONAL ENGINEER 9/22/11

ECN-11-TA-03-1398-0000-0265

C:\pwworking\ph\d0224116\102310-C-1003-RO.dwg, Oct 24, 2011 @ 3:09pm

ENV-RCRA-12-0059

ENCLOSURE 2

LAUR-12-10463

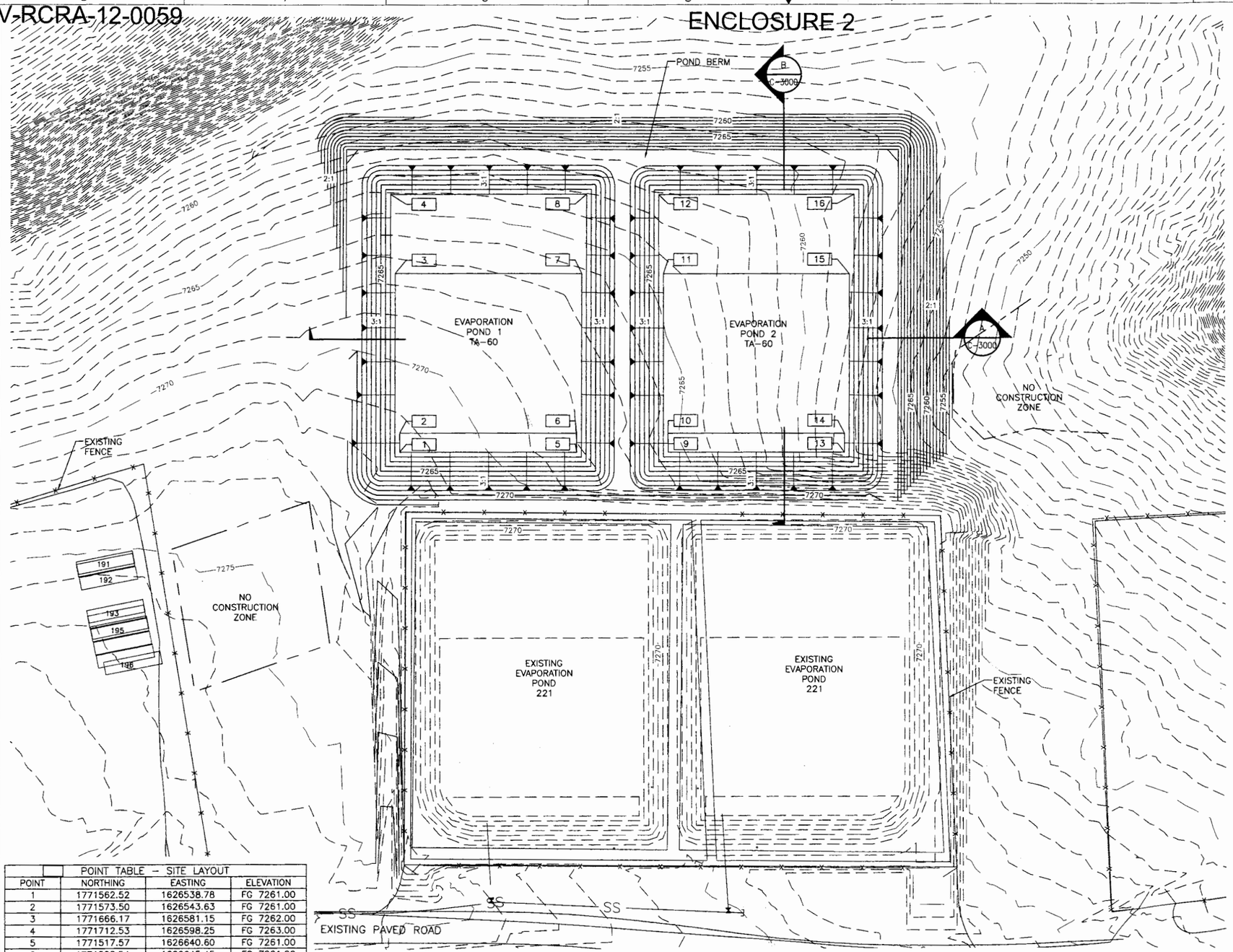

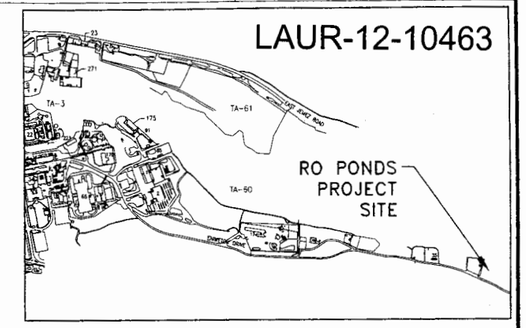

KEY PLAN
SCALE: NONE

GENERAL NOTES:

1. IF THIS SHEET IS NOT 24"X36", THEN IT IS A REDUCED SIZE PLOT. USE GRAPHIC SCALE ACCORDINGLY.
2. ALL EARTWHORK ACTIVITES SHALL BE CONDUCTED IN ACCORDANCE WITH LANL SPECIFICATION 31 2000.
3. SUBCONTRACTOR TO UTILIZE BEST MANAGEMENT PRACTICES DETAILED IN THE STORMWATER POLLUTION PREVENTION PLAN (SWPPP). SEE LANL SPECIFICATION SECTION 01 5705 FOR ADDITIONAL REQUIREMENTS.
4. SUBCONTRACTOR SHALL REVEGETATE ALL DISTURBED AREAS IN ACCORDANCE WITH LANL SPECIFICATION 32 9219.
5. EXISTING TOPOGRAPHY, FACILITIES, AND UTILITIES SHOWN ARE BASED ON MAPPING PROVIDED BY LANL. VERIFY EXISTING CONDITIONS PRIOR TO BEGINNING CONSTRUCTION ACTIVITIES FOR COORDINATION AND FIELD ADJUSTMENTS AS REQUIRED.

POINT TABLE – SITE LAYOUT

POINT	NORTHING	EASTING	ELEVATION
1	1771562.52	1626538.78	FG 7261.00
2	1771573.50	1626543.63	FG 7261.00
3	1771666.17	1626581.15	FG 7262.00
4	1771712.53	1626598.25	FG 7263.00
5	1771517.57	1626640.60	FG 7261.00
6	1771528.54	1626645.45	FG 7261.00
7	1771618.74	1626688.56	FG 7262.00
8	1771662.96	1626711.36	FG 7263.00
9	1771494.10	1626693.78	FG 7261.00
10	1771505.10	1626698.44	FG 7261.00
11	1771597.71	1626736.11	FG 7262.00
12	1771644.11	1626753.25	FG 7263.00
13	1771449.14	1626795.60	FG 7261.00
14	1771460.06	1626800.42	FG 7261.00
15	1771550.28	1626843.54	FG 7262.00
16	1771594.54	1626866.36	FG 7263.00

SITE PLAN

20' 10' 0 10' 20' 30' 40'
1"=30'-0"

LANL BUILDING OFFICIAL
APPROVED
18413
11-17-11
11-106

NO	DATE	CLASS REV	DESCRIPTION	DWN	VER	CHKD	SUB	APP

HDR ENGINEERING INC.
2155 LOUISIANA BLVD., NE
SUITE 9500
ALBUQUERQUE, NM 87110
MAIN: (505) 530-5400 FAX:
(505) 830-5454

SERF EXPANSION

RO REJECT EVAPORATION PONDS
GRADING PLAN

BLDG. TA-60

DRAWN	B.F.
DESIGN	W.C.
CHECKED	E.D.
DATE	10-24-11

SUBMITTED
APPROVED FOR RELEASE

Los Alamos NATIONAL LABORATORY
PO Box 1663
Los Alamos, New Mexico 87545

SHEET C-1004
8 OF 67

CLASSIFICATION UNCLASSIFIED
DRAFTSMAN DATE 11/7/11

PROJECT ID	DRAWING NO	REV
102310	C-55752	0

ECN-11-TA-03-1398-0000-0265

C:\pwworking\phx\d0224116\102310-C-1004-R0.dwg, Oct 24, 2011 @ 3:11pm

ENV-RCRA-12-0059 ENCLOSURE 2 LAUR-12-10463

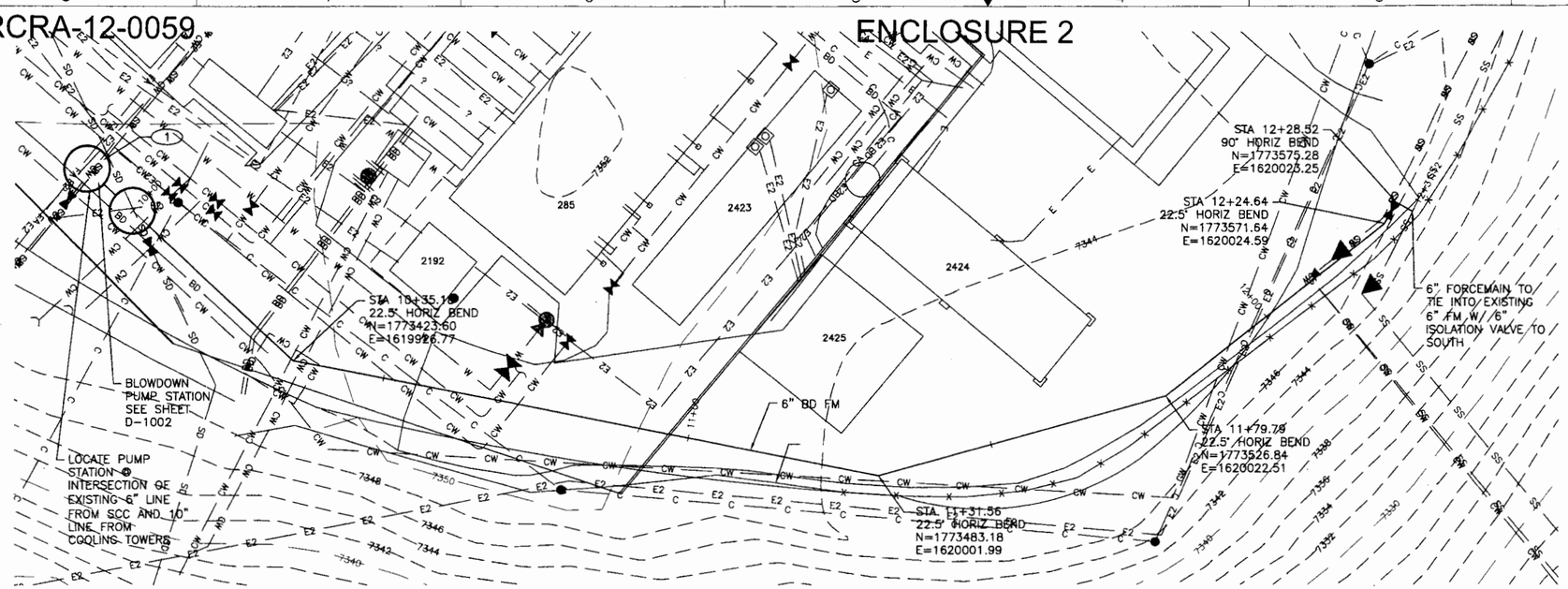

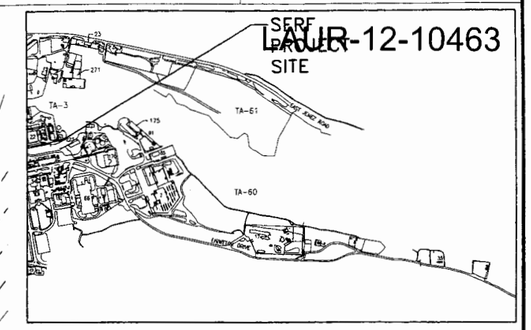

KEY PLAN
SCALE: NONE

6" BLOWDOWN FORCEMAIN

1"=10'-0"

CHRIS RODRIGUEZ NEW MEXICO 16239 LICENSED PROFESSIONAL ENGINEER 9/22/11

GENERAL NOTES:

1. IF THIS SHEET IS NOT 24"X36", THEN IT IS A REDUCED SIZE PLOT. USE GRAPHIC SCALE ACCORDINGLY.
2. SUBCONTRACTOR TO DEFLECT PIPE JOINTS AS NECESSARY TO MATCH ALIGNMENT. DO NOT EXCEED MANUFACTURERS RECOMMENDATIONS.
3. ALL EXISTING UTILITIES ARE SHOWN AT REQUIRED BURY DEPTHS PER LANL DESIGN STANDARDS. HOWEVER, ACTUAL ELEVATIONS ARE UNKNOWN. SUBCONTRACTOR SHALL DETERMINE ELEVATIONS AND NOTIFY THE ENGINEER PRIOR TO CONSTRUCTION.
4. EXISTING TOPOGRAPHY, FACILITIES, AND UTILITIES SHOWN ARE BASED ON MAPPING PROVIDED BY LANL. VERIFY EXISTING CONDITIONS PRIOR TO BEGINNING CONSTRUCTION ACTIVITIES FOR COORDINATION AND FIELD ADJUSTMENTS AS REQUIRED.
5. SUBCONTRACTOR TO FIELD MODIFY LOCATION OF BLOWDOWN PUMP STATION, PIPE ROUTING AND ASSOCIATED INFRASTRUCTURE BASED ON ACTUAL LOCATION OF EXISTING UTILITIES.

KEYED NOTES:

(1) SUBCONTRACTOR TO FIELD VERIFY LOCATION OF CONNECTION POINT TO THE EXISTING TANK TA-336 FILL LINE AND COORDINATE WITH LANL STAFF FOR FINAL CONNECTION.

HORIZ: 1"=10'-0"
VERT: 1"=5'-0"

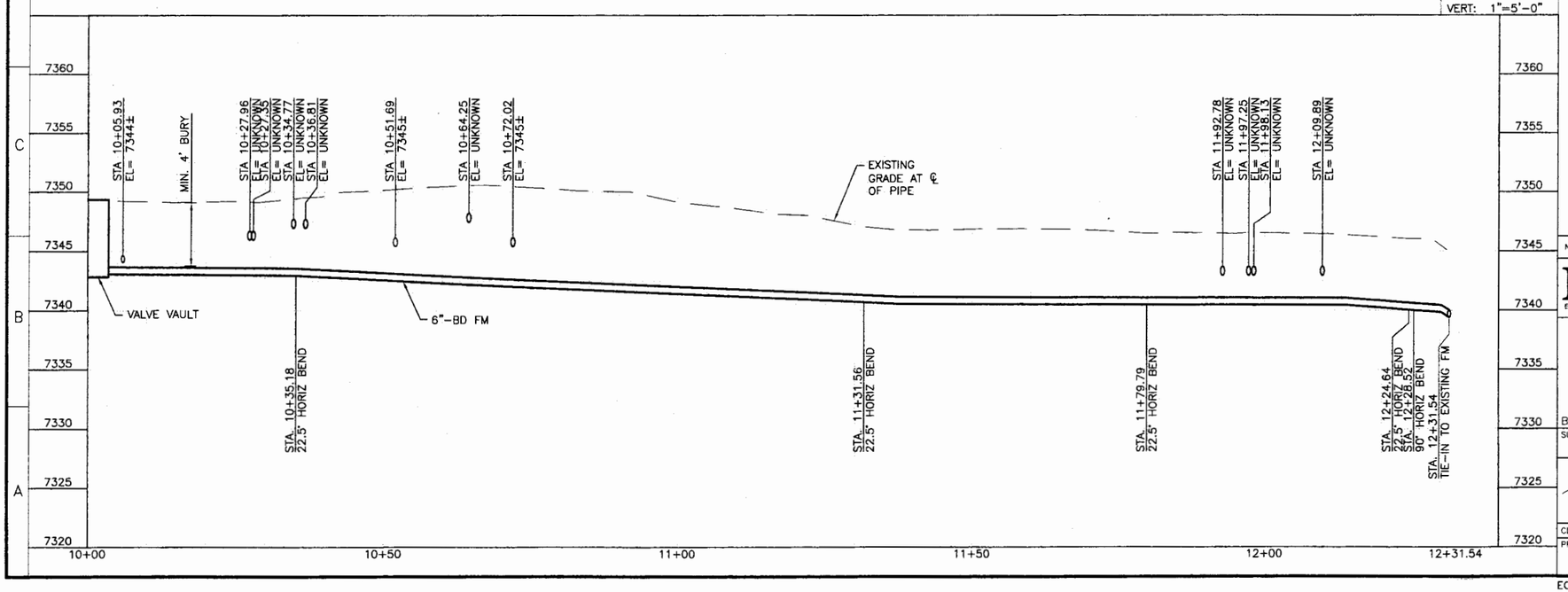

LANL BUILDING OFFICIAL APPROVED 119-13 11-17-11 11-106

REVIEWED FOR LANL STANDARDS COMPLIANCE PER ISO 341 - E CH 16

NO	DATE	CLASS REV	DESCRIPTION	DWN	VER	CHKD	SUB	APP

HDR ENGINEERING INC.
2158 LOUISIANA BLVD., NE
SUITE 9500
ALBUQUERQUE, NM 87110
MAIN: (505) 830-5400 FAX: (505) 830-5454

SERF EXPANSION

6" BLOWDOWN FORCEMAIN PLAN AND PROFILE

BLDG. TA-03

DRAWN	B.F.
DESIGN	W.C.
CHECKED	E.D.
DATE	10-24-11

SUBMITTED Greg Burgess
APPROVED FOR RELEASE

Los Alamos NATIONAL LABORATORY PO Box 1663 Los Alamos, New Mexico 87545

SHEET C-1005
9 OF 67

CLASSIFICATION UNCLASSIFIED REVIEWER Bonnie J. Bennett DATE 10/2/11

PROJECT ID	DRAWING NO	REV
102310	C-55752	0

ECN-11-TA-03-1398-0000-0265

C:\pwworking\phx\d0224116\102310-C-1005-R0.dwg, Oct 25, 2011 @ 9:57am

ENV-RCRA-12-0059

ENCLOSURE 2

LAUR-12-10463

GENERAL NOTES:

1. IF THIS SHEET IS NOT 24"X36", THEN IT IS A REDUCED SIZE PLOT. USE GRAPHIC SCALE ACCORDINGLY.
2. THESE SECTIONS ARE FOR ILLUSTRATIVE PURPOSES ONLY.

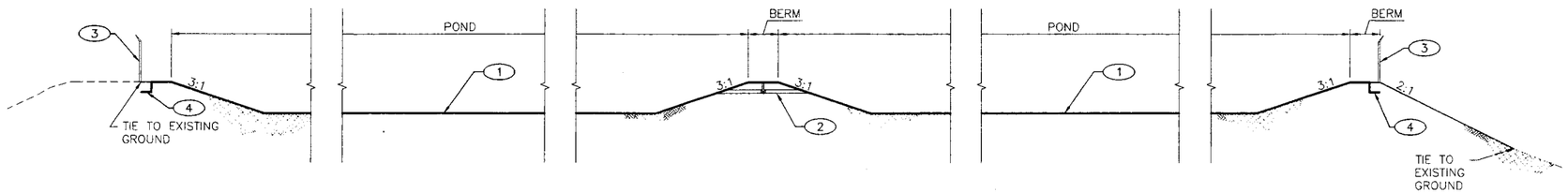

A / C-1004 SECTION
SCALE: NONE

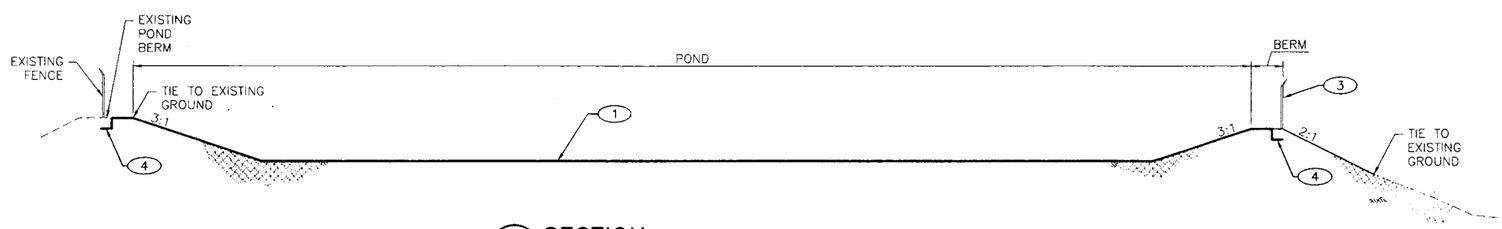

B / C-1004 SECTION
SCALE: NONE

KEYED NOTES:

1. DUAL HDPE LINER SYSTEM.
2. 8" EQUALIZATION PIPE SEE SECTION C/C-3001.
3. 8' CHAIN LINK FENCE SEE DETAIL 2/C-5001.
4. LINER ANCHOR TRENCH SEE SECTION A/C-3001.

LANL BUILDING OFFICIAL APPROVED
SIG. 19113
DATE 11-17-11
11-1-06
REVIEWED FOR LANL STANDARDS COMPLIANCE PER ISO 34 - 5 OR 18

CHRIS RODRIGUEZ NEW MEXICO 16239 LICENSED PROFESSIONAL ENGINEER
9/22/11

NO	DATE	CLASS REV	DESCRIPTION	DWN	VER	CHKD	SUB	APP

HDR ENGINEERING INC.
2155 LOUISIANA BLVD., NE
SUITE 3500
ALBUQUERQUE, NM 87110
MAIN: (505) 830-5400 FAX: (505) 830-5454

SERF EXPANSION

RO REJECT EVAPORATION PONDS SECTIONS

BLDG. TA-60

DRAWN	B.F.	
DESIGN	W.C.	
CHECKED	E.D.	
DATE	10-24-11	

SUBMITTED

APPROVED FOR RELEASE

Los Alamos NATIONAL LABORATORY
P.O. Box 1663
Los Alamos, New Mexico 87545

SHEET C-3000
10 OF 67

CLASSIFICATION UNCLASSIFIED REVIEWER DATE 11/7/11

PROJECT ID 102310
DRAWING NO C-55752
REV 0

ECN-11-TA-03-1398-0000-0265

C:\pwworking\phx\d0224116\102310-C-3000-R0.dwg, Oct 24, 2011 @ 3:14pm

ENV-RCRA-12-0059

ENCLOSURE 2

LAUR-12-10463

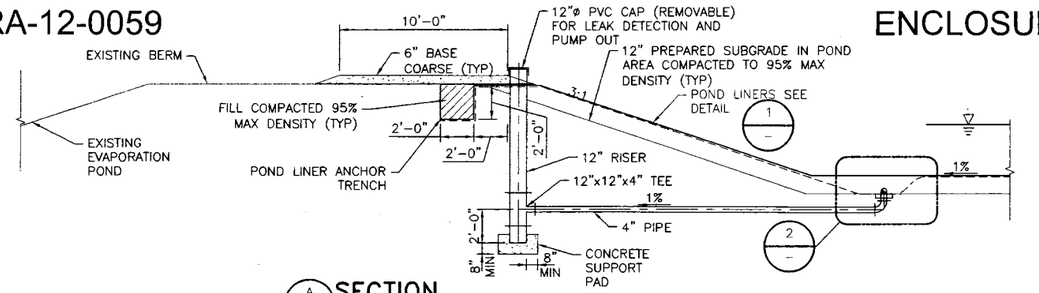

A C-1003 SECTION
SCALE: NONE

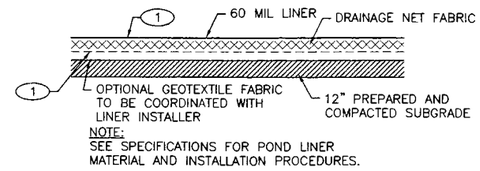

1 - POND LINER DETAIL
SCALE: NONE

GENERAL NOTES:

1. IF THIS SHEET IS NOT 24"X36", THEN IT IS A REDUCED SIZE PLOT. USE GRAPHIC SCALE ACCORDINGLY.
2. THESE SECTIONS ARE FOR ILLUSTRATIVE PURPOSES ONLY.
3. DIMENSIONS AND SLOPES SHOWN MAY NOT ACCURATELY REFLECT THE SECTIONS ON SHEET C-3000.

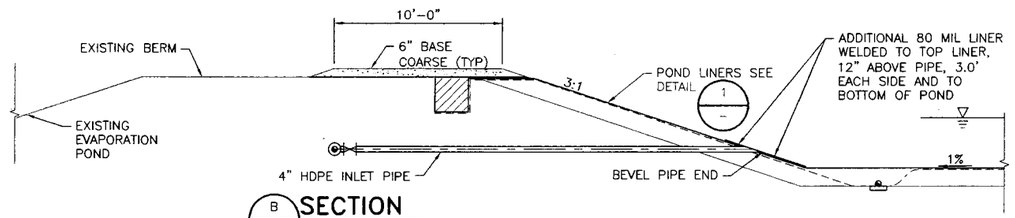

B C-1003 SECTION
SCALE: NONE

KEYED NOTES:

1. DUAL HDPE LINER SYSTEM:
   - PRIMARY LINER: 60 MIL TEXTURED HDPE
   - SECONDARY LINER: 60 MIL SMOOTH HDPE
2. 8" EQUALIZATION PIPE

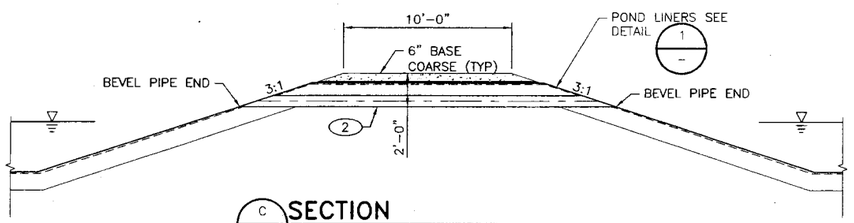

C C-3000 SECTION
SCALE: NONE

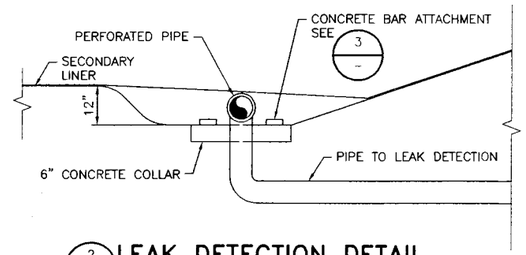

2 - LEAK DETECTION DETAIL
SCALE: NONE

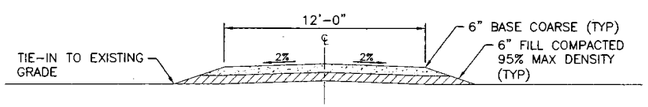

D C-1003 ROAD SECTION
SCALE: NONE

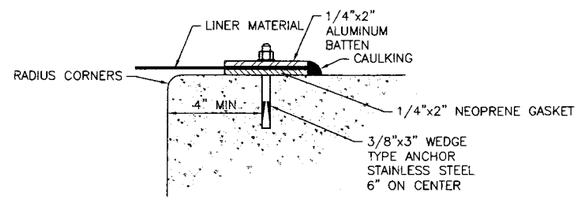

3 - LINER ATTACHMENT TO CONCRETE
SCALE: NONE

CHRIS RODRIGUEZ NEW MEXICO 16239 LICENSED PROFESSIONAL ENGINEER 9/22/11

LANL BUILDING OFFICIAL SIG. 179113 DATE 11-17-11 EX. 11-106 APPROVED

REVIEWED FOR LANL STANDARDS COMPLIANCE PER ISO 3411-2 CN 10

NO	DATE	CLASS REV	DESCRIPTION	DWN	VER	CHKD	SUB	APP

HDR ENGINEERING INC.
2155 LOUISIANA BLVD., NE
SUITE 9600
ALBUQUERQUE, NM 87110
MAIN: (505) 830-5400 FAX: (505) 830-5454

SERF EXPANSION

RO REJECT EVAPORATION PONDS
SECTION DETAILS

BLDG. TA-60

DRAWN	B.F.
DESIGN	W.C.
CHECKED	E.D.
DATE	10-24-11

SUBMITTED
APPROVED FOR RELEASE

Los Alamos NATIONAL LABORATORY
PO Box 1663
Los Alamos, New Mexico 87545

SHEET C-3001
11 OF 67

CLASSIFICATION UNCLASSIFIED REVIEWER DATE 11/7/11

PROJECT ID	DRAWING NO	REV
102310	C-55752	0

ECN-11-TA-03-1398-0000-0265

C:\pwworking\ph\d02241\6\102310-C-3001-R0.dwg, Oct 24, 2011 @ 3:14pm

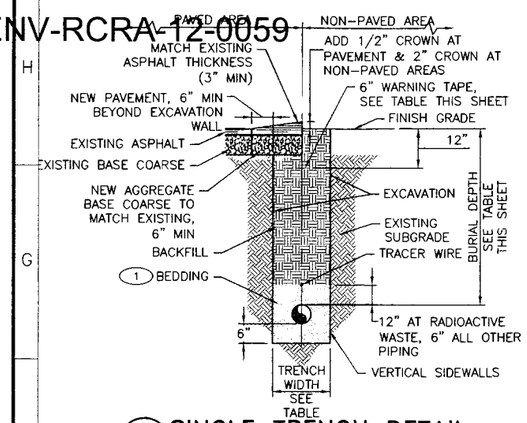

1/– SINGLE TRENCH DETAIL
SCALE: NONE

NOTE:
1 ANY ASPHALT PAVEMENT SHALL BE SAW CUT PRIOR TO BEGIN TRENCHING OPERATIONS.

KEYED NOTES:
1. PROVIDE A MINIMUM OF 6" OF SAND BEDDING BETWEEN PIPE AND VERTICAL SIDEWALLS.

TRENCH WIDTH	
UTILITY SIZE	TRENCH WIDTH
TO 4"	24"
6"	30"
8"	32"
10"	34"
12"	36"
14"	38"
16"	40"
18"	42"

WARNING TAPE COLOR	
TAPE	COLOR
ELECTRIC	RED
NATURAL GAS	YELLOW
COMMUNICATION	ORANGE
SEWER	GREEN
OIL, FUEL, RAD. WASTE, ETC	YELLOW
WATER	BLUE
STEAM/CONDENSATE	YELLOW
EFFLUENT/RECLAIMED WATER	PURPLE

UTILITY BURIAL DEPTH	
SERVICE	MIN DEPTH
COMMUNICATIONS/ELECTRICAL CONDUITS/DUCT BANKS (TOP)	24"
NATURAL GAS MAINS	36"
FUEL/NATURAL GAS LINES UNDER ROADWAYS AND PARKING AREAS	30"
PE FUEL/NATURAL GAS LINES UNDER ROADWAYS AND PARKING AREAS	60"
SEWER/RAD WASTE LINES	48"
STEAM/CONDENSATE LINES	48"
WATER LINES	48"

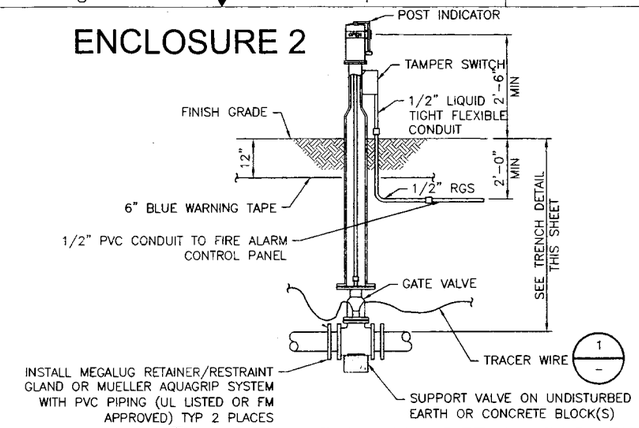

6/– SHUT-OFF VALVE DETAIL FOR FIRE LINE (PIV)
SCALE: NONE

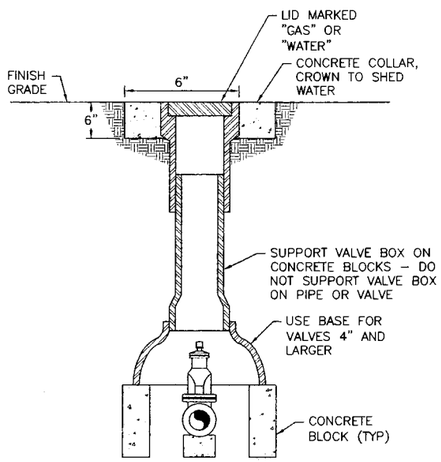

3/– VALVE BOX DETAIL
SCALE: NONE

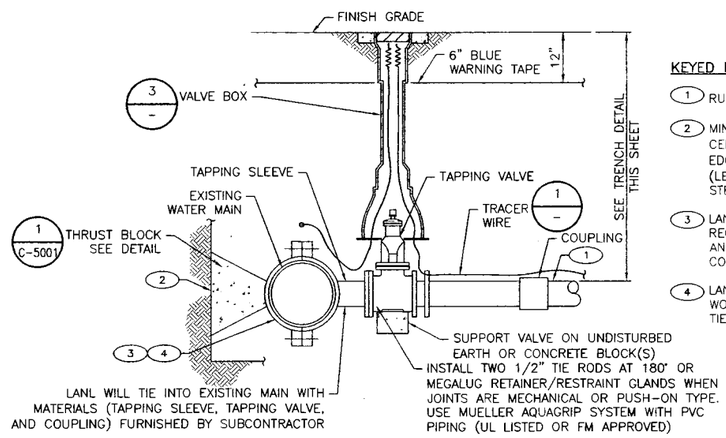

4/– WATER PIPING TIE-IN DETAIL
SCALE: NONE

KEYED NOTES:
1. RUN SERVICE LINE WITHIN 6" OF EXISTING MAIN.
2. MINIMUM BELL HOLE AT BOTTOM OF TRENCH: 24" FROM CENTERLINE OF NEW PIPE ON EACH SIDE; 18" FROM EDGE OF MAIN BACKSIDE; 8'-0" IN FRONT OF MAIN (LENGTH OF BELL HOLE); 18" UNDER MAIN. TAPER OR STEP TRENCH TO MEET OSHA REQUIREMENTS.
3. LANL CONSTRUCTION INSPECTOR WILL ENSURE MATERIALS REQUIRED FOR HOT TAP ARE AT JOBSITE, DISINFECTING AND PRESSURE TESTING OF SERVICE LINE HAVE BEEN COMPLETED, AND EXCAVATION OF BELL HOLE IS DONE.
4. LANL CONSTRUCTION INSPECTOR WILL INFORM LANL 10 WORKING DAYS NOTICE OF THE NEED TO SCHEDULE A TIE-IN TO EXISTING UTILITIES.

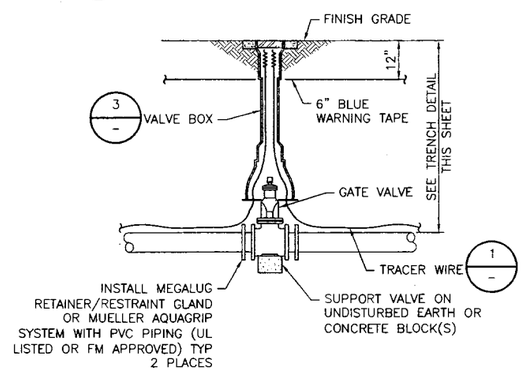

5/– WATER PIPING SHUT-OFF VALVE DETAIL
SCALE: NONE

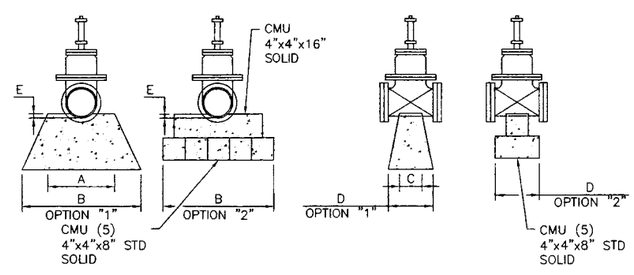

FRONT VIEW
SCALE: NONE

SIDE VIEW
SCALE: NONE

2/– WATER VALVE SUPPORT DETAIL
SCALE: NONE

VALVE SUPPORT TABLE				
VALVE SIZE	A	(MIN) B	C	(MIN) D
6"	12"	20"	4"	4"
8"	14"	24"	4"	4"
10"	16"	26"	5"	5"
12"	18"	28"	5"	5"
14	20"	30"	6"	6"
16"	22"	32"	8"	8"
18"	24"	34"	10"	10"
E = 1-1/2" MORTAR BED "CRADLE"				

GENERAL NOTES:
1. CONCRETE f'c=2500 PSI MINIMUM.
2. BASE AREA MAY BE MODIFIED WHEN SUBSTITUTING PRECAST BLOCK.
3. BLOCK OR SUPPORT MUST BE UNIFORMLY SUPPORTED FROM BELOW BY UNDISTURBED SOILS.
4. AT TOP OF SUPPORT, ALLOW SUFFICIENT ROOM FOR ACCESS TO FLANGE
5. AT FRONT VIEWS, NEAR FLANGE NOT SHOWN FOR CLARITY.

CHRIS RODRIGUEZ NEW MEXICO 16239 LICENSED PROFESSIONAL ENGINEER 9/22/11

LANL BUILDING OFFICIAL APPROVED DG 119113 DATE 11-17-11 DATE 11-10-7

REVIEWED FOR LANL STANDARDS COMPLIANCE PER ISD 341-2, CH. 18

NO	DATE	CLASS REV	DESCRIPTION	DWN	VER	CHKD	SUB	APP

HDR ENGINEERING INC.
2155 LOUISIANA BLVD., NE
SUITE 1600
ALBUQUERQUE, NM 87110
MAIN: (505) 830-6400 FAX: (505) 830-0454

SERF EXPANSION

PIPING DETAILS

BLDG. TA–

DRAWN	B.F.
DESIGN	W.C.
CHECKED	E.D.
DATE	10-24-11

SUBMITTED

APPROVED FOR RELEASE

Los Alamos NATIONAL LABORATORY PO Box 1663 Los Alamos, New Mexico 87545

SHEET C-5000

12 OF 67

CLASSIFICATION UNCLASSIFIED

REVIEWER DATE

PROJECT ID 102310

DRAWING NO C-55752

REV 0

ECN-11-TA-03-1398-0000-0265

C:\pworking\phs\d0224116\102310-C-5000-R0.dwg, Oct 24, 2011 @ 3:15pm

ENV-RCRA-12-0059

ENCLOSURE 2

LAUR-12-10463

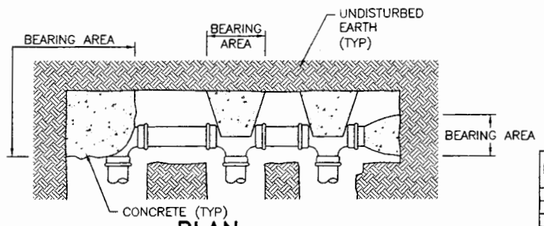

PLAN
SCALE: NONE

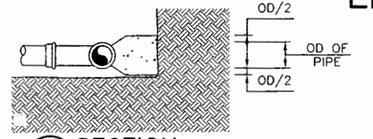

A SECTION
SCALE: NONE

MIN THRUST BLOCK AREA (SQUARE FEET)			
PIPE DIA	PLUG TEE	90° BEND	45° BEND
4"	2	2	2
6"	4	5	3
8"	6	8	5
10"	9	13	7
12"	13	18	10
14"	18	25	14
16"	23	32	18

1 THRUST BLOCK DETAIL
SCALE: NONE

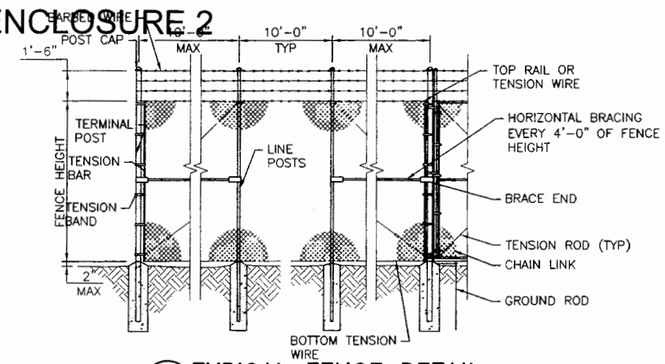

2 TYPICAL FENCE DETAIL
SCALE: NONE

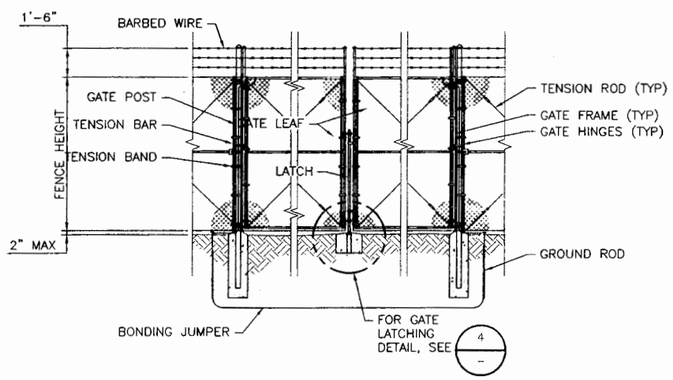

3 VEHICLE GATE DETAIL
SCALE: NONE

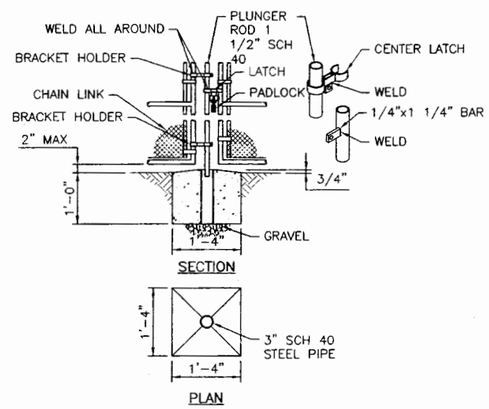

4 GATE LATCHING DETAIL
SCALE: NONE

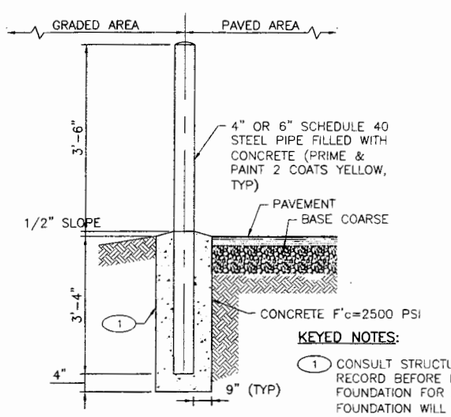

KEYED NOTES:

1. CONSULT STRUCTURAL ENGINEER OF RECORD BEFORE POURING CONCRETE FOUNDATION FOR BOLLARD IF SIDE OF FOUNDATION WILL BE WITHIN 18" OF BELOW GRADE OBJECTS (E.G., PIPES, CONDUITS, ETC.) THAT OCCURS WITHIN THE HEIGHT OF THE FOUNDATION.

5 BOLLARD DETAIL
SCALE: NONE

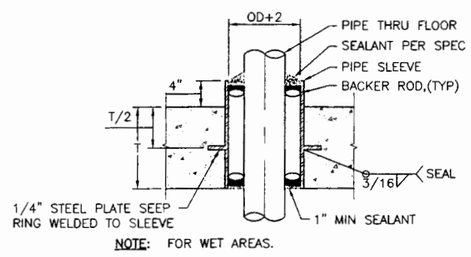

NOTE: FOR WET AREAS.

6 FLOOR PENETRATION
SCALE: NONE

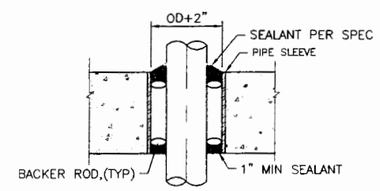

7 WALL & SUSPENDED SLAB PENETRATION, DRY AREAS
SCALE: NONE

LANL BUILDING OFFICIAL APPROVED 11-17-11 11-106

REVIEWED FOR LANL STANDARDS COMPLIANCE PER ISO 241 - E CH. 16

CHRIS RODRIGUEZ NEW MEXICO 16239 LICENSED PROFESSIONAL ENGINEER 9/22/11

NO	DATE	CLASS REV	DESCRIPTION	DWN	VER	CHKD	SUB	APP

HDR ENGINEERING INC.
2155 LOUISIANA BLVD., NE
SUITE 9600
ALBUQUERQUE, NM 87110
MAIN: (505) 830-5400 FAX: (505) 830-5454

SERF EXPANSION

MISCELLANEOUS DETAILS

BLDG. TA–

DRAWN	B.F.
DESIGN	W.C.
CHECKED	E.D.
DATE	10–24–11

SUBMITTED

APPROVED FOR RELEASE

Los Alamos NATIONAL LABORATORY PO Box 1663 Los Alamos, New Mexico 87545

SHEET C–5001

13 OF 67

CLASSIFICATION UNCLASSIFIED REVIEWER DATE 11/7/11

PROJECT ID 102310

DRAWING NO C–55752

REV 0

ECN–11–TA–03–1398–0000–0265

C:\pwworking\phx\d0224116\102310–C–5001–R0.dwg, Oct 24, 2011 @ 3:15pm

ENV-RCRA-12-0059

ENCLOSURE 2

LAUR-12-10463

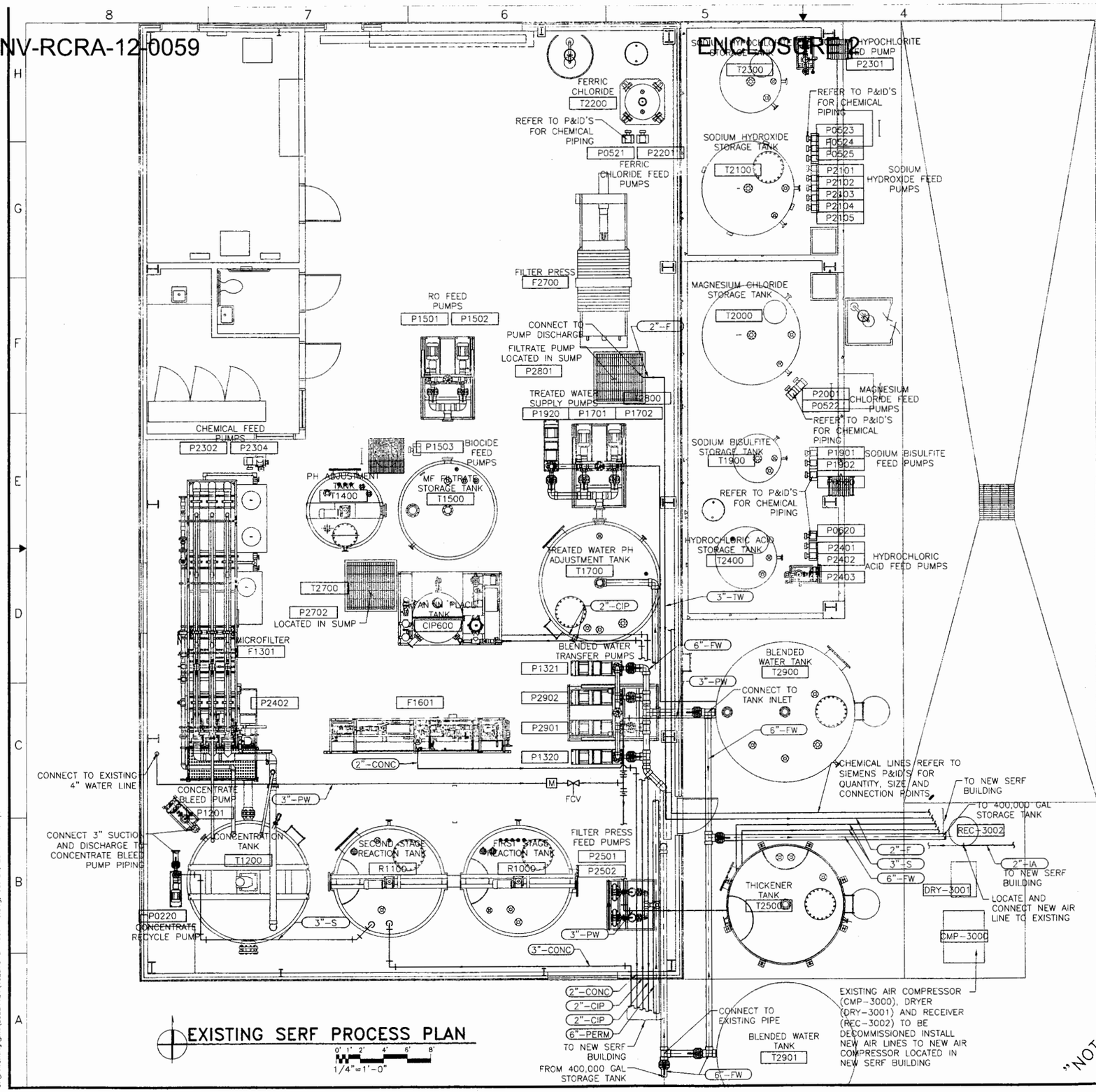

EXISTING SERF PROCESS PLAN

"NOT FOR CONSTRUCTION"
PRELIMINARY

GENERAL NOTES:

1. IF THIS SHEET IS NOT 24"X36", THEN IT IS A REDUCED SIZE PLOT. USE GRAPHIC SCALE ACCORDINGLY.
2. SUBCONTRACTOR TO FIELD VERIFY ALL EXISTING EQUIPMENT AND COORDINATE WITH NEW EQUIPMENT AS REQUIRED.
3. HEAT TRACE AND INSULATE ALL EXTERIOR EXPOSED PIPING.
4. INSTALL PIPE SUPPORT AND HANGERS IN ACCORDANCE WITH SPECIFICATIONS.
5. SUBCONTRACTOR TO COORDINATE PIPE ROUTING WITH EXISTING PIPING AND PROCESS EQUIPMENT.
6. CHEMICAL PIPING NOT SHOWN. REFER TO SIEMENS P&ID'S FOR CHEMICAL PIPING.
7. FOR CLARITY, VALVES, REDUCERS AND OTHER APPURTENANCES ARE NOT SHOWN. REFER TO SIEMENS P&ID'S.
8. ALL PROCESS EQUIPMENT RELATED TO THE SERF FACILITY IS PROVIDED BY SIEMENS AND ALL SUPPORTING DOCUMENTATION FOR EQUIPMENT WILL BE PROVIDED BY SIEMENS AS A CONSTRUCTION SUBMITTAL.

NO	DATE	CLASS REV	DESCRIPTION	DWN	VER	CHKD	SUB	APP

HDR ENGINEERING INC.
2155 LOUISIANA BLVD. NE
SUITE 9500
ALBUQUERQUE, NM 87110
MAIN: (505) 830-5400 FAX:
(505) 830-5454

SERF EXPANSION

EXISTING SERF BUILDING GENERAL PROCESS EQUIPMENT ARRANGEMENT PLAN

BLDG. 3093 TA-03

DRAWN	B.F.
DESIGN	W.C.
CHECKED	E.D.
DATE	10-24-11

SUBMITTED

APPROVED FOR RELEASE

Los Alamos NATIONAL LABORATORY PO Box 1663 Los Alamos, New Mexico 87545

SHEET D-1000

39 OF 67

CLASSIFICATION UNCLASSIFIED REVIEWER DATE

PROJECT ID 102310

DRAWING NO C-55752

REV 0

ECN-11-TA-03-1398-0000-0265

C:\pwworking\phx\d0224124\102310-D-1000-R0.dwg, Oct 24, 2011 @ 4:45pm

ENV-RCRA-12-0059

ENCLOSURE 2

LAUR-12-10463

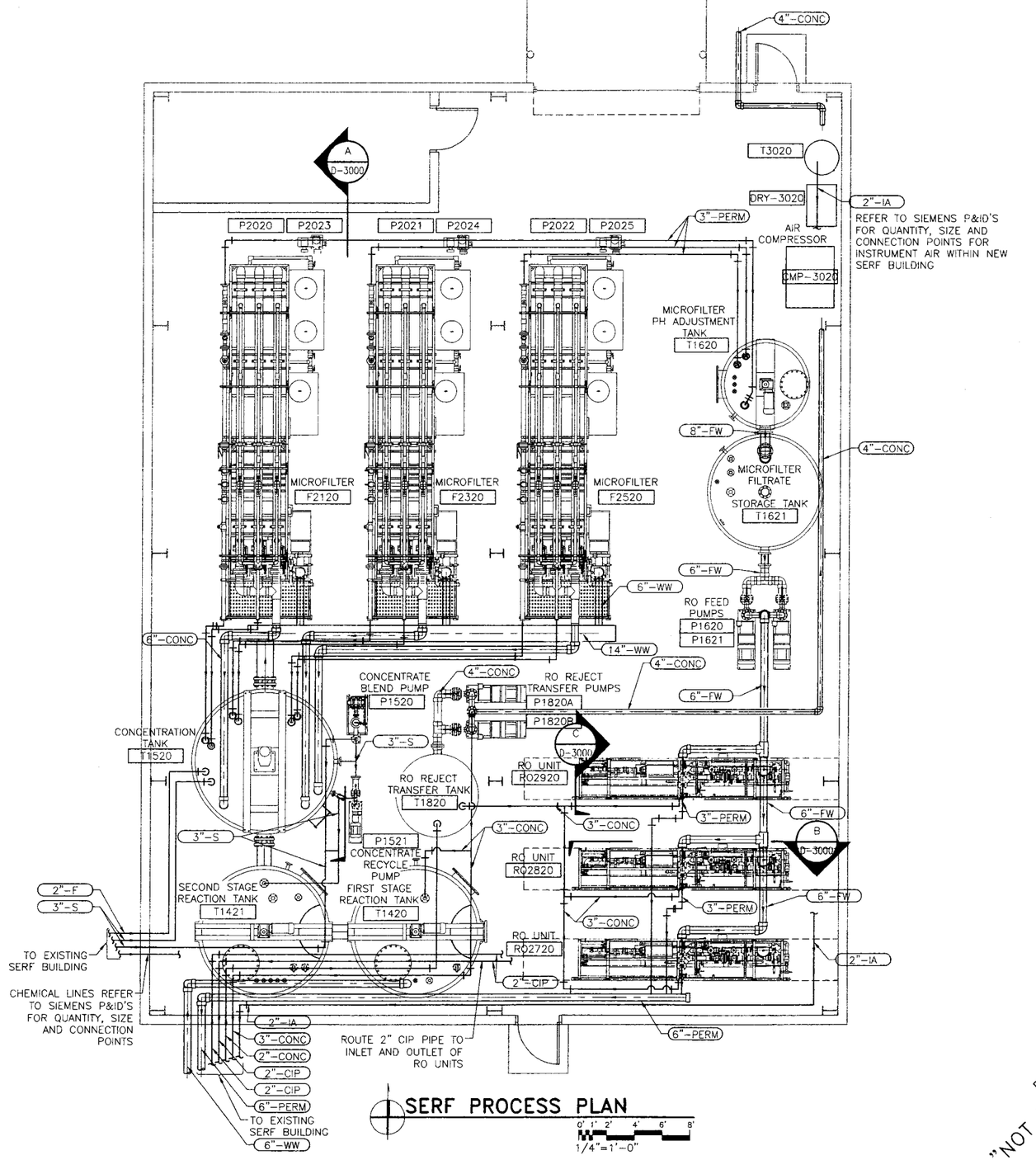

SERF PROCESS PLAN

"NOT FOR CONSTRUCTION"
PRELIMINARY

GENERAL NOTES:

1. IF THIS SHEET IS NOT 24"X36", THEN IT IS A REDUCED SIZE PLOT. USE GRAPHIC SCALE ACCORDINGLY.
2. HEAT TRACE AND INSULATE ALL EXTERIOR EXPOSED PIPING.
3. INSTALL PIPE SUPPORT AND HANGERS IN ACCORDANCE WITH SPECIFICATIONS.
4. SUBCONTRACTOR TO COORDINATE PIPE ROUTING WITH PROCESS EQUIPMENT.
5. CHEMICAL PIPING NOT SHOWN. REFER TO SIEMENS P&ID'S FOR CHEMICAL PIPING.
6. FOR CLARITY, VALVES, REDUCERS AND OTHER APPURTENANCES ARE NOT SHOWN. REFER TO SIEMENS P&ID'S.
7. ALL PROCESS EQUIPMENT RELATED TO THE SERF FACILITY IS PROVIDED BY SIEMENS AND ALL SUPPORTING DOCUMENTATION FOR EQUIPMENT WILL BE PROVIDED BY SIEMENS AS A CONSTRUCTION SUBMITTAL.

NO	DATE	CLASS REV	DESCRIPTION	DWN	VER	CHKD	SUB	APP

HDR ENGINEERING INC.
2155 LOUISIANA BLVD., NE
SUITE 9500
ALBUQUERQUE, NM 87110
MAIN: (505) 830-5400 FAX: (505) 830-5404

SERF EXPANSION

SERF BUILDING GENERAL PROCESS EQUIPMENT ARRANGEMENT PLAN

BLDG. 3093 TA-03

DRAWN	W.C.
DESIGN	W.C.
CHECKED	E.D.
DATE	10-24-11

SUBMITTED

APPROVED FOR RELEASE

Los Alamos NATIONAL LABORATORY PO Box 1663 Los Alamos, New Mexico 87545

SHEET D-1001

40 OF 67

CLASSIFICATION UNCLASSIFIED REVIEWER DATE 11/7/11

PROJECT ID 102310

DRAWING NO C-55752

REV 0

ECN-11-TA-03-1398-0000-0265

C:\pwworking\phx\d0224124\102310-D-1001-R0.dwg, Oct 24, 2011 @ 4:49pm

ENV-RCRA-12-0059

ENCLOSURE 2

LAUR-12-10463

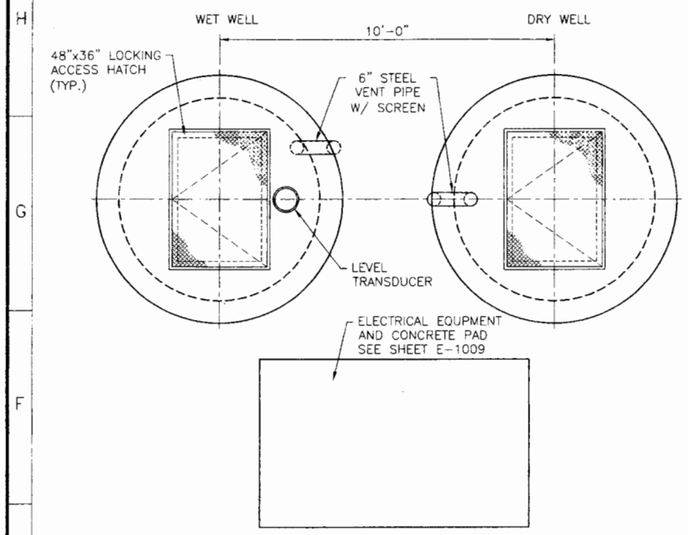

1 TOP PLAN DETAIL
SCALE: NONE

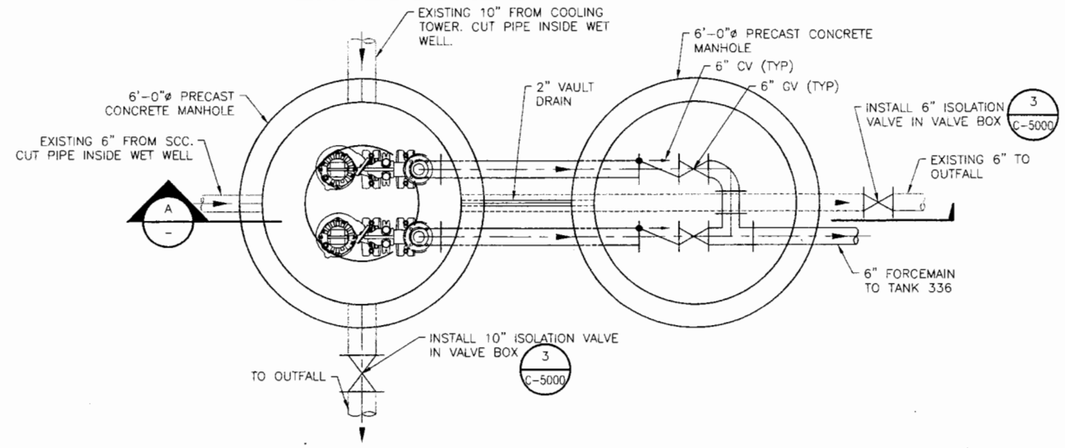

2 PLAN DETAIL
SCALE: NONE

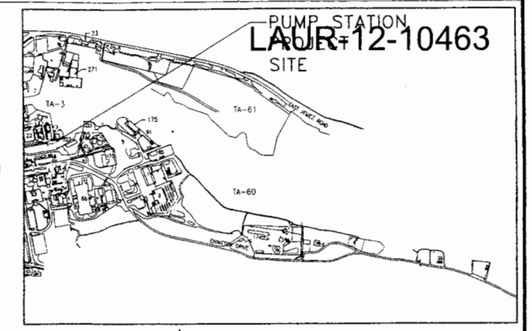

KEY PLAN
SCALE: NONE

GENERAL NOTES:

1. IF THIS SHEET IS NOT 24"X36", THEN IT IS A REDUCED SIZE PLOT. USE GRAPHIC SCALE ACCORDINGLY.
2. SEE LANL SPECIFICATION 33 3200 FOR PUMP REQUIREMENTS.
3. SUBCONTRACTOR TO FIELD MODIFY LOCATION OF BLOWDOWN PUMP STATION, PIPE ROUTING AND ASSOCIATED INFRASTRUCTURE BASED ON ACTUAL LOCATION OF EXISTING UTILITIES.

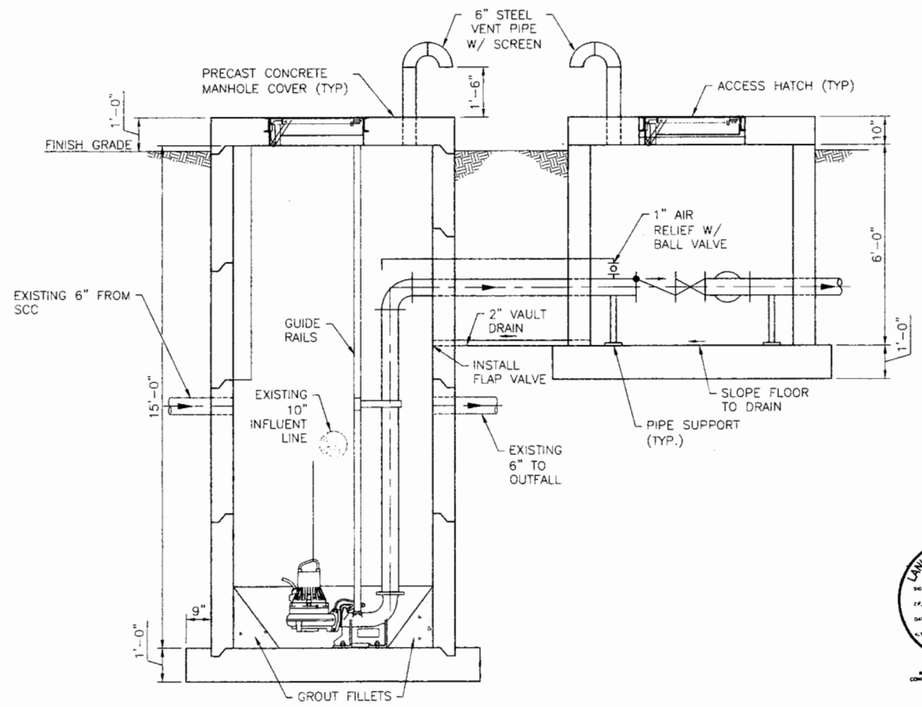

A SECTION
SCALE: NONE

NO	DATE	CLASS REV	DESCRIPTION	DWN	VER	CHKD	SUB	APP

HDR ENGINEERING INC.
2155 LOUISIANA BLVD., NE
SUITE 9500
ALBUQUERQUE, NM 87110
MAIN: (505) 830-5400 FAX:
(505) 830-5454

SERF EXPANSION

PUMP STATION PLAN AND SECTION

DRAWN	B.F.
DESIGN	W.C.
CHECKED	E.D.
DATE	10-24-11

BLDG. TA-03

SUBMITTED

APPROVED FOR RELEASE

Los Alamos NATIONAL LABORATORY
PO Box 1663
Los Alamos, New Mexico 87545

SHEET D-1002
41 OF 67

CLASSIFICATION UNCLASSIFIED REVIEWER DATE 11/7/11

PROJECT ID	DRAWING NO	REV
102310	C-55752	0

LANL BUILDING OFFICIAL APPROVED 11/9/13 11-19-11 11-10-6

CHRIS RODRIGUEZ NEW MEXICO 16239 LICENSED PROFESSIONAL ENGINEER 9/22-11

C:\pwworking\phx\d0224124\102310-D-1002-R0.dwg, Oct 24, 2011 @ 3:33pm

ECN-11-TA-03-1398-0000-0265

ENV-RCRA-12-0059

ENCLOSURE 2

LAUR-12-10463

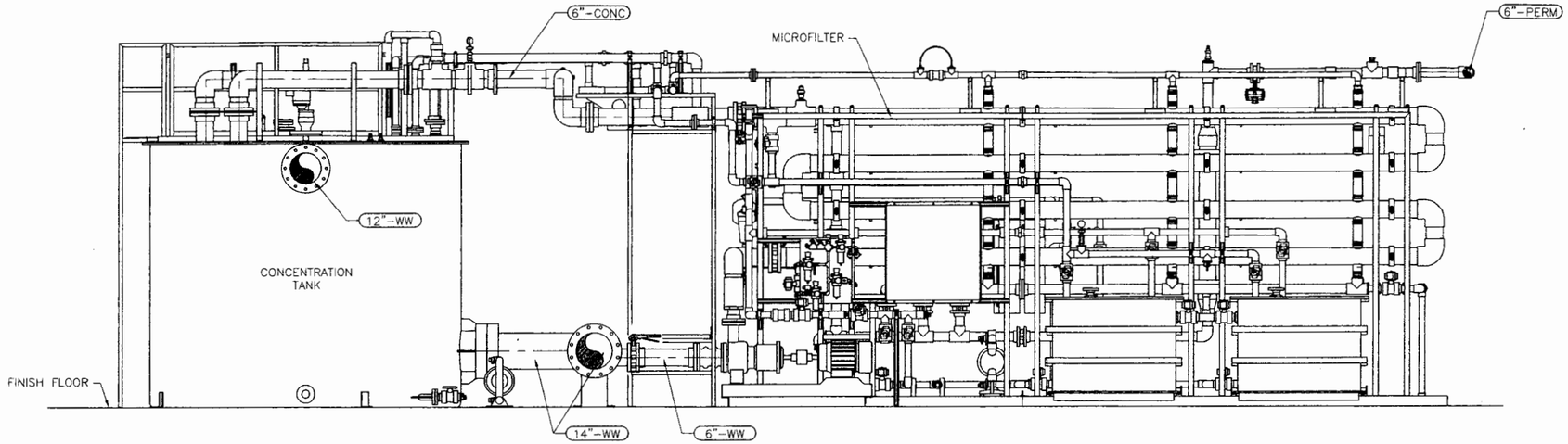

A MICROFILTER SECTION

1' 6" 0 1' 2' 3'
1/2"=1'-0"

GENERAL NOTES:

1. IF THIS SHEET IS NOT 24"X36", THEN IT IS A REDUCED SIZE PLOT. USE GRAPHIC SCALE ACCORDINGLY.
2. INSTALL PIPE SUPPORT AND HANGERS IN ACCORDANCE WITH SPECIFICATIONS.
3. CONTRACTOR TO COORDINATE PIPE ROUTING WITH PROCESS EQUIPMENT.
4. CHEMICAL PIPING NOT SHOWN. REFER TO SIEMENS P&ID'S FOR CHEMICAL PIPING.
5. FOR CLARITY, VALVES, REDUCERS AND OTHER APPURTENANCES ARE NOT SHOWN. REFER TO SIEMENS P&ID'S.
6. ALL PROCESS EQUIPMENT RELATED TO THE SERF FACILITY IS PROVIDED BY SIEMENS AND ALL SUPPORTING DOCUMENTATION FOR EQUIPMENT WILL BE PROVIDED BY SIEMENS AS A CONSTRUCTION SUBMITTAL.

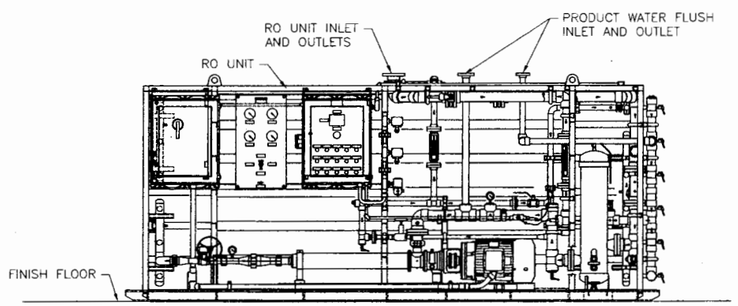

B RO UNIT SECTION

1' 6" 0 1' 2' 3'
1/2"=1'-0"

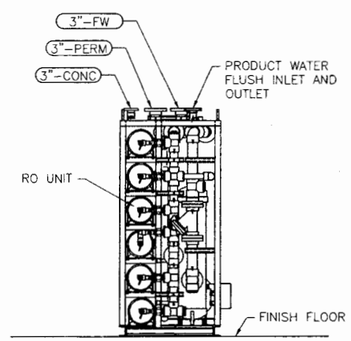

C RO UNIT SECTION

1' 6" 0 1' 2' 3'
1/2"=1'-0"

"NOT FOR CONSTRUCTION"
90% REVIEW

NO	DATE	CLASS REV	DESCRIPTION	DWN	VER	CHKD	SUB	APP

HDR ENGINEERING INC.
2155 LOUISIANA BLVD., NE
SUITE 9500
ALBUQUERQUE, NM 87110
MAIN: (505) 830-5400 FAX: (505) 830-5454

SERF EXPANSION

SERF BUILDING PROCESS SECTIONS

BLDG. 3093 TA-03

DRAWN	W.C.
DESIGN	W.C.
CHECKED	E.D.
DATE	10-24-11

SUBMITTED

APPROVED FOR RELEASE

Los Alamos NATIONAL LABORATORY
PO Box 1663
Los Alamos, New Mexico 87545

SHEET D-3000

42 OF 67

CLASSIFICATION UNCLASSIFIED REVIEWER DATE 11/7/11

PROJECT ID	DRAWING NO	REV
102310	C-55752	0

ECN-11-TA-03-1398-0000-0265

C:\pwworking\phx\d0224124\102310-D-3000-R0.dwg, Oct 24, 2011 @ 4:50pm

SYMBOL LEGEND

(NOT ALL SYMBOLS WILL APPLY TO THIS PROJECT)

SYMBOL	DESCRIPTION
	EXISTING
	REMOVE
	NEW WORK
	HIDDEN OR BURIED
	HOMERUN CONDUIT — GROUND, PHASE, SWITCHED, NEUTRAL, ISOLATED GROUND
	FLEXIBLE CONDUIT
	CONDUIT TURNING DOWN
	CONDUIT TURNING UP
	CONDUIT UP AND DOWN
	CONDUIT SEAL
	CONDUIT CAP
480V / 600A	BUSWAY WITH DESCRIPTION
G	GROUNDING CONDUCTOR
6 X 24	CABLE TRAY WITH DESCRIPTION
J	CEILING JUNCTION BOX
J	WALL JUNCTION BOX
	DUPLEX RECEPTACLE OUTLET
	SINGLE RECEPTACLE OUTLET
	DOUBLE DUPLEX RECEPTACLE OUTLET
GFCI WP	GROUND FAULT CIRCUIT INTERRUPTER DUPLEX OUTLET WITH WEATHERPROOF COVER
	SPLIT WIRED DUPLEX RECEPTACLE
IG	DUPLEX ISOLATED GROUND
A	SPECIAL PURPOSE OUTLET – USE SUBSCRIPT TO IDENTIFY TYPE IN SPECS
A	FLOOR RECEPTACLE OUTLET USE SUBSCRIPT TO IDENTIFY TYPE IN SPECS
	RECEPTACLE RACEWAY
$a	SINGLE POLE SWITCH – USE SUBSCRIPT TO DESIGNATE CONTROL OF PARTICULAR OUTLETS
$2	DOUBLE POLE SWITCH
$3	THREE-WAY SWITCH
$4	FOUR-WAY SWITCH
$WP	WEATHERPROOF SWITCH
$K	KEY OPERATED SWITCH
600	DIMMER SWITCH – NUMBER INDICATES WATTAGE
M	OCCUPANCY SENSING SWITCH
P	PHOTOCELL
6 30	REMOTE CONTROL SWITCH 6 POLE, 30 AMPS
A 1, b	FLUORESCENT LUMINAIRE A=FIXTURE TYPE 1=CIRCUIT NUMBER b=SWITCH CONTROLLING FIXTURE
	FLUORESCENT STRIP LUMINAIRE
	WALL MOUNTED FLUORESCENT LUMINAIRE
	CEILING MOUNTED LUMINAIRE
	WALL MOUNTED LUMINAIRE
	EMERGENCY LUMINAIRE
	LIGHT POLE WITH LUMINAIRE

SYMBOL	DESCRIPTION
	EMERGENCY LIGHTING UNIT
	CEILING MOUNTED EXIT SIGN – ARROW AS INDICATED
	TWO FACED EXIT SIGN
	WALL MOUNTED EXIT SIGN
	SWITCHBOARD, POWER PANELBOARD
LP-XX	LIGHTING PANELBOARD
T	TRANSFORMER
30	NON-FUSIBLE SAFETY SWITCH (NUMBER INDICATES SWITCH SIZE)
F 40/60	FUSED SAFETY SWITCH (NUMBERS INDICATE FUSE/SWITCH SIZES)
20	COMBINATION MAGNETIC STARTER AND CIRCUIT BREAKER 2 – INDICATES NEMA STARTER SIZE 20 – INDICATES CIRCUIT BREAKER TRIP
	MAGNETIC STARTER
ASD	ADJUSTABLE SPEED DRIVE
3	MOTOR (NUMBER INDICATES HP)
	BELL
H	HORN "H" OR SIREN "S"
	BUZZER
	PUSHBUTTON
F	MANUAL PULL STATION
V	FIRE ALARM HORN (V=VISUAL SIGNAL)
P	PHOTOELECTRIC SMOKE DETECTOR
I	IONIZATION SMOKE DETECTOR
T	THERMAL DETECTOR
P D	DUCT SMOKE DETECTOR (PHOTOELECTRIC)
DH	MAGNETIC DOOR HOLDER
PS	PRESSURE SWITCH
FS	FLOW SWITCH
S	VALVE SUPERVISORY SWITCH
FACP	FIRE ALARM CONTROL PANEL
F	FIRE ALARM RACEWAY
S	CEILING SPEAKER
S	WALL SPEAKER
	TELECOMMUNICATIONS OUTLET
	FLOOR MOUNTED TELECOMMUNICATIONS OUTLET
	INTERCOM OUTLET
T	TELECOMMUNICATIONS RACEWAY
D	PROTECTED TRANSMISSION SYSTEM (PTS) DATA TERMINAL CONNECTION
TV	TELEVISION OUTLET
CR	CARD READER
ES	ELECTRIC DOOR STRIKE
DC	DOOR CONTACTS
RAP	REMOTE ACCESS PANEL
HG	HAND GEOMETRY UNIT
MD	MOTION DETECTOR
C	CLOSED CIRCUIT TV CAMERA

SYMBOL	DESCRIPTION
100/3	MEDIUM VOLTAGE DISCONNECT SWITCH
600	MEDIUM VOLTAGE DRAWOUT CIRCUIT BREAKER
480V 208Y/120V 500 KVA	TRANSFORMER (DELTA-WYE CONN.)
	SHIELDED TRANSFORMER
1000/1600	DRAWOUT CIRCUIT BREAKER (TRIP/FRAME)
300/400 GFI	CIRCUIT BREAKER (TRIP/FRAME) WITH GROUND FAULT INTERRUPTER
7/MCP	MOTOR CIRCUIT PROTECTOR
30/MCP	MOTOR CONTROL CENTER STARTER UNIT
	FUSE
	GROUND
G	GENERATOR
3000/5 3	CURRENT TRANSFORMER (NUMBERS INDICATE RATIO AND QUANTITY)
3	POTENTIAL TRANSFORMER (NUMBER INDICATES QUANTITY)
AS	AMMETER SWITCH
VS	VOLTMETER SWITCH
V	VOLTMETER
A	AMMETER
KW	KILOWATT METER
N E L	TRANSFER SWITCH
K1	KEY INTERLOCK #1
	BATTERY
	NORMALLY CLOSED CONTACT
	NORMALLY OPEN CONTACT
	PROTECTIVE RELAY, SOLENOID COIL
	THERMAL OVERLOAD
	CONNECTION
	CROSS, NO CONNECTION
	SURGE ARRESTOR
TVSS	TRANSIENT VOLTAGE SURGE SUPPRESSOR
	CAPACITOR
CR1	CONTROL RELAY #1
	BUS PLUG CIRCUIT BREAKER
T	THERMOSTAT
1	KEYED NOTE DESIGNATION
3	ELECTRICAL EQUIPMENT DESIGNATION (SEE SCHEDULE)
5	MECHANICAL EQUIPMENT DESIGNATION (SEE SCHEDULE)
7	NAMEPLATE DESIGNATION (SEE SCHEDULE)
WP AFF	WEATHERPROOF ABOVE FINISH FLOOR

NON-STANDARD (NS) SYMBOLS

SYMBOL	DESCRIPTION
LP-XX	LIGHTING PANEL – 250 VOLTS TO 600 VOLTS
	INSTRUMENTATION AND CONTROLS CONNECTION
RVSS	REDUCED VOLTAGE STEADY STATE
	EQUIPMENT CONNECTION
E	CONCRETE ENCASED DUCTBANK
E	DIRECT BURRIED CONDUIT(S)
	LETTER DESIGNATION E – ELECTRICAL F – FIRE ALARM T – TELECOMMUNICATIONS
LP	LIGHTNING PROTECTION GROUND LOOP
OH	OVERHEAD ELECTRIC LINE
S_M	MOTOR RATED SWITCH

"NOT FOR CONSTRUCTION"
90% REVIEW

NO	DATE	CLASS REV	DESCRIPTION	DWN	VER	CHKD	SUB	APP

HDR ENGINEERING INC.
2155 LOUISIANA BLVD., NE
SUITE 5500
ALBUQUERQUE, NM 87110
MAIN: (505) 830-5400 FAX: (505) 830-5454

SERF EXPANSION

ELECTRICAL LEGEND

BLDG. 3093 TA-03

DRAWN	B.Q.
DESIGN	D.B.
CHECKED	P.D.
DATE	10-24-11

SUBMITTED Greg W. Burgi APPROVED FOR RELEASE

Los Alamos NATIONAL LABORATORY PO Box 1663 Los Alamos, New Mexico 87545

SHEET E-0001 47 OF 67

CLASSIFICATION UNCLASSIFIED REVIEWER Bonnie Bennett DATE 11/7/11

PROJECT ID 102310 DRAWING NO C-55752 REV 0

ECN-11-TA-03-1398-0000-0265

C:\pwworking\phx\d0224126\102310-E-0001-R0.dwg, Oct 24, 2011 @ 4:32pm

ENV-RCRA-12-0059

ENCLOSURE 2

LAUR-12-10463

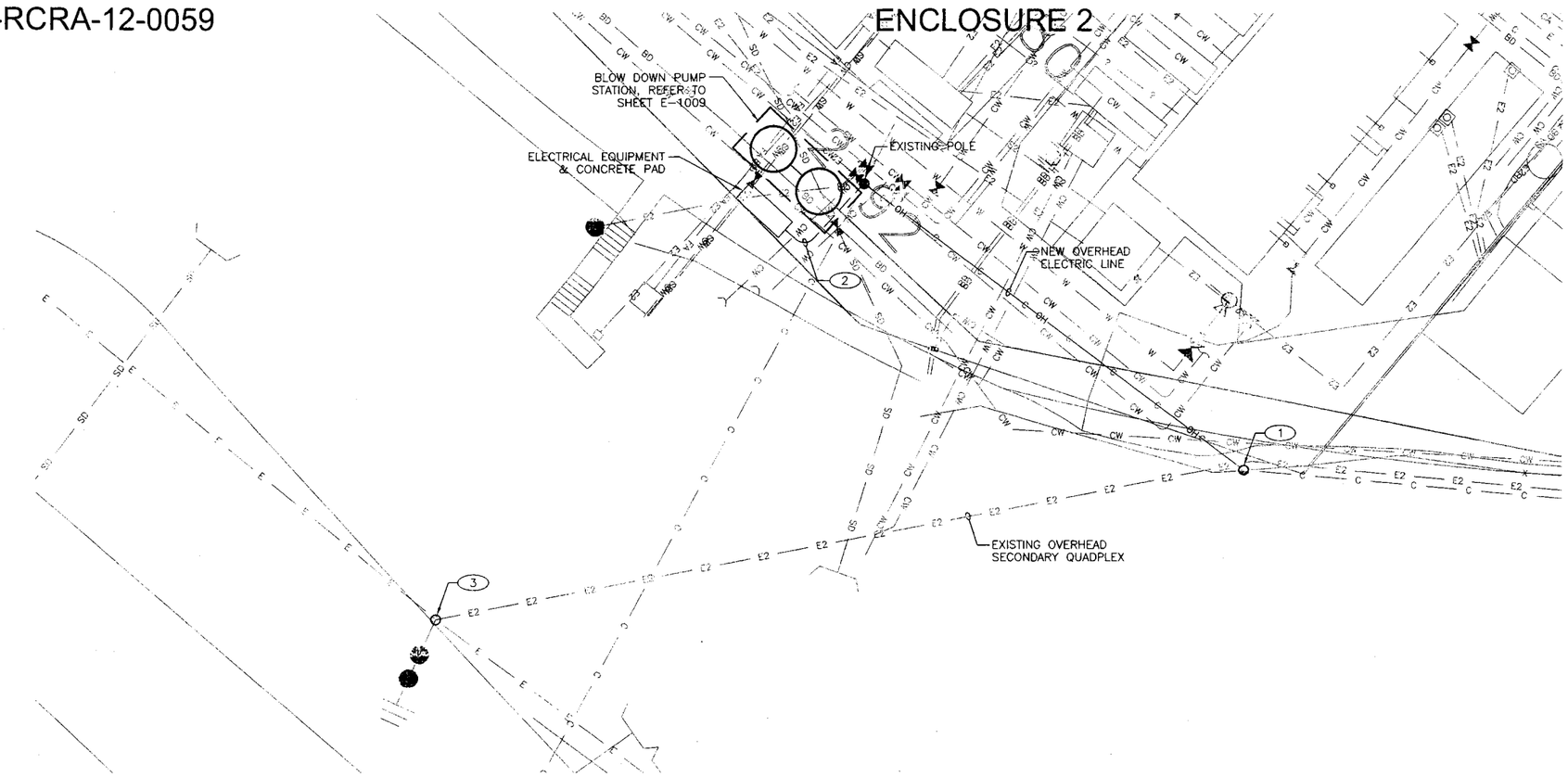

SITE PLAN

10' 5' 0 5' 10'

1"=10'-0"

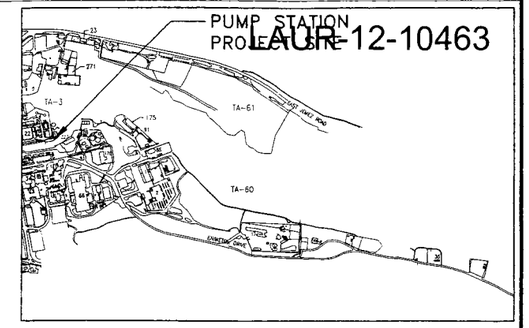

KEY PLAN

SCALE: NONE

GENERAL NOTES:

1. IF THIS SHEET IS NOT 24"X36", THEN IT IS A REDUCED SIZE PLOT. USE GRAPHIC SCALE ACCORDINGLY.
2. REFER TO SHEET E-6003 PUMP STATION ELECTRICAL ONE-LINE DIAGRAM.

KEYED NOTES:

1. TIE NEW OVERHEAD ELECTRIC LINE TO EXISTING QUADPLEX ON EXISTING POLE.
2. UNDERGROUND FEEDER AND TELECOMMUNICATION CONDUITS ROUTED FROM NEW PUMP STATION TO RISERS AND UP EXISTING POLE.
3. EXISTING 3-PH POLE-MOUNTED TRANSFORMER BANK.

"NOT FOR CONSTRUCTION"

90% REVIEW

NO	DATE	CLASS REV	DESCRIPTION	DWN	VER	CHKD	SUB	APP

HDR ENGINEERING INC.
2155 LOUISIANA BLVD., NE
SUITE 9500
ALBUQUERQUE, NM 87110
MAIN: (505) 830-5400 FAX: (505) 830-5454

SERF EXPANSION

BLOWDOWN PUMP STATION SITE PLAN

BLDG. 3093 TA-03

DRAWN	B.Q.
DESIGN	D.B.
CHECKED	P.D.
DATE	10-24-11

SUBMITTED

APPROVED FOR RELEASE

Los Alamos NATIONAL LABORATORY
PO Box 1663
Los Alamos, New Mexico 87545

SHEET E-1008

56 OF 67

CLASSIFICATION

REVIEWER

DATE 10-7-11

PROJECT ID	DRAWING NO	REV
102310	C-55752	0

ECN-11-TA-03-1398-0000-0265

C:\pwworking\phx\d0224126\102310-E-1008-R0.dwg, Oct 24, 2011 @ 4:36pm

ENV-RCRA-12-0059

ENCLOSURE 2

LAUR-12-10463

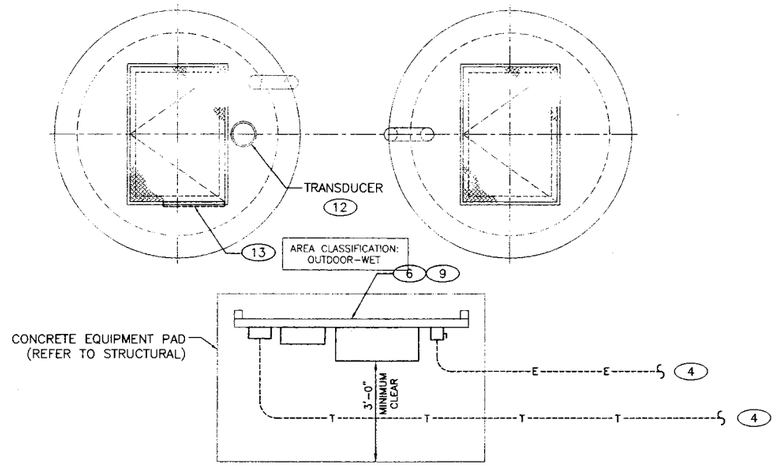

PUMP STATION POWER PLAN

SCALE: NONE

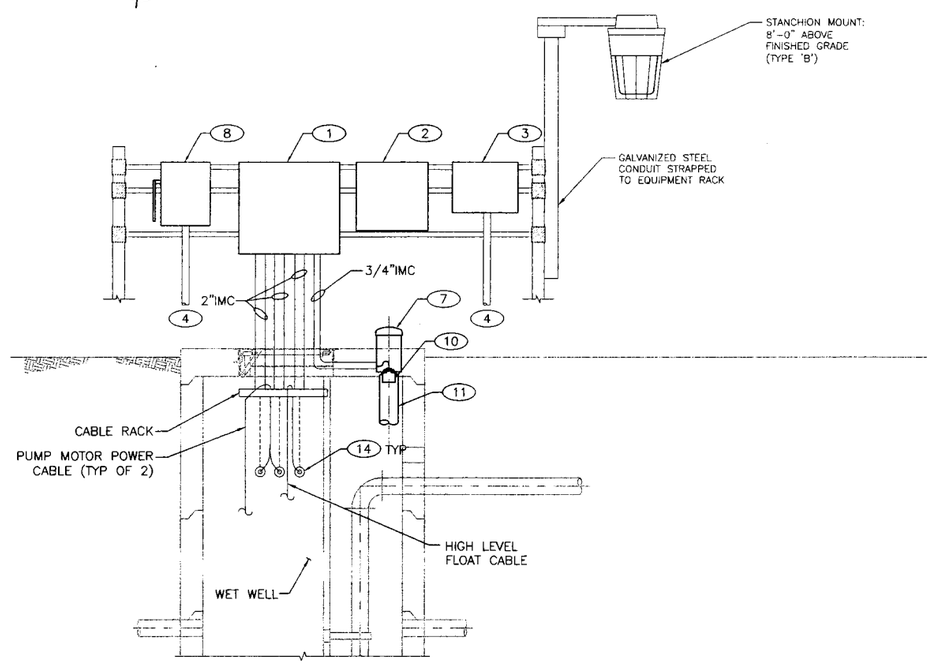

PUMP STATION AND POWER RACK DETAIL

SCALE: NONE

GENERAL NOTES

1. IF THIS SHEET IS NOT 24"X36", THEN IT IS A REDUCED SIZED PLOT. USE GRAPHIC SCALE ACCORDINGLY.
2. ALL CABLES ROUTED FROM LIFT STATION CONTROL PANEL TO PUMP POWER AND CONTROL DEVICES ARE PROVIDED MY MANUFACTURER.
3. REFER TO SHEET E-7000 FOR LIGHTING FIXTURE SCHEDULE.

KEYED NOTES

1. PUMP STATION CONTROL PANEL FURNISHED BY MANUFACTURER INSTALLED BY CONTRACTOR.
2. INTERFACE ALARM AND CONTROL PANEL.
3. TELEPHONE LINE GROUNDING/TERMINATOR BOX. BOND TELEPHONE GROUNDING/TERMINATOR BOX TO MAIN FUSED SERVICE DISCONNECT WITH #4/0 GROUNDING CONDUCTOR.
4. ROUTE UNDERGROUND CONDUIT TO EXISTING POLE ADJACENT TO NEW PUMP STATION. REFER TO SHEET E-1008 FOR CONTINUATION.
5. TRANSDUCER CONTRACTOR FURNISHED AND INSTALLED BY LANL UTILITIES.
6. MOUNT EQUIPMENT SHOWN ON UNISTRUT. REFER TO OUTDOOR EQUIPMENT MOUNTING DETAIL SHEET E-5000.
7. CPVC REDUCER COUPLING, PIPING AND CAP CONTRACTOR FURNISHED AND INSTALLED. SET INTO CONCRETE LID.
8. FUSED SAFETY DISCONNECT SWITCH. GROUND MAIN FUSED SERVICE DISCONNECT TO GROUNDING ELECTRODE. GROUND WITH #4/0 GROUNDING CONDUCTOR.
9. REFER TO PUMP STATION AND POWER RACK DETAIL THIS SHEET.
10. TRANSDUCER AND PLEXIGLASS CONTRACTOR FURNISHED AND INSTALLED BY LANL SUPPORT SERVICES SUBCONTRACTOR (SSS).
11. STILLING WELL, FURNISHED AND INSTALLED BY LANL SSS.
12. LOCATE TO PROVIDE CLEAR SPACE BELOW FOR INSTALLATION OF 6" PVC STILLING WELL TO BASE OF WET WELL. STILLING WELL FURNISHED AND INSTALLED BY LANL SSS. REFER TO TRANSDUCER MOUNTING DETAL SHEET E-5001.
13. LOCATE CABLE RACK ON SAME SIDE OF CONTROL PANEL. DO NOT LOCATE TRANSDUCER AND FLOAT IN DIRECT LINE WITH INLET AND DISCHARGE LINES.
14. CONDUITS FROM PUMP STATION CONTROL PANEL. SEAL OPEN ENDS WITH MASTIC WATERPROOF SEALANT.

"NOT FOR CONSTRUCTION"
90% REVIEW

NO	DATE	CLASS REV	DESCRIPTION	DWN	VER	CHKD	SUB	APP

HDR ENGINEERING INC.
2155 LOUISIANA BLVD., NE
SUITE 9500
ALBUQUERQUE, NM 87110
MAIN: (505) 830-6400 FAX: (505) 830-5454

SERF EXPANSION

BLOWDOWN PUMP STATION POWER PLAN

BLDG. 3093 TA-03

DRAWN	B.Q.
DESIGN	D.B.
CHECKED	P.D.
DATE	10-24-11

SUBMITTED APPROVED FOR RELEASE

Los Alamos NATIONAL LABORATORY PO Box 1663 Los Alamos, New Mexico 87545

SHEET E-1009

57 OF 67

CLASSIFICATION REVIEWER DATE 11/7/11

PROJECT ID 102310 DRAWING NO C-55752 REV 0

ECN-11-TA-03-1398-0000-0265

C:\pwworking\phx\d0224126\102310-E-1009-R0.dwg, Oct 24, 2011 @ 4:33pm

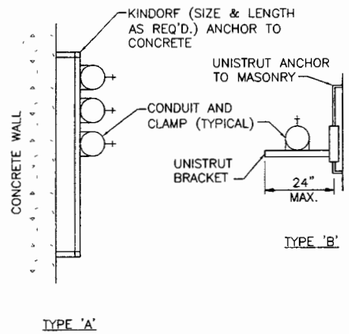

1 E-5000 CONDUIT SUPPORT DETAIL
SCALE: NONE

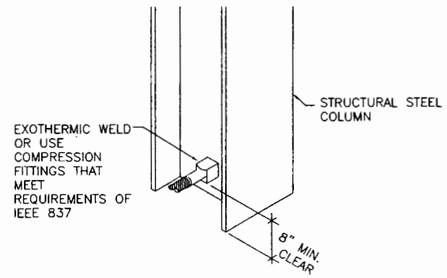

2 E-5000 EXOTHERMIC WELD TO STEEL COLUMN
SCALE: NONE

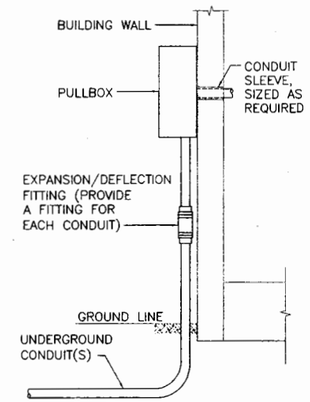

3 E-5000 UNDERGROUND CONDUIT BUILDING ENTRY DETAIL
SCALE: NONE

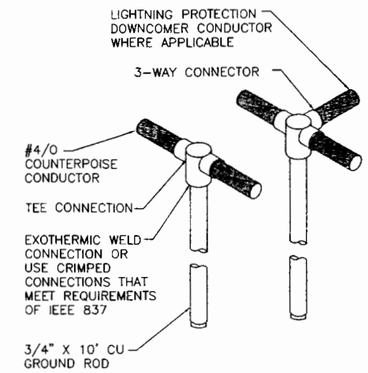

4 E-5000 GROUND ROD DETAIL
SCALE: NONE

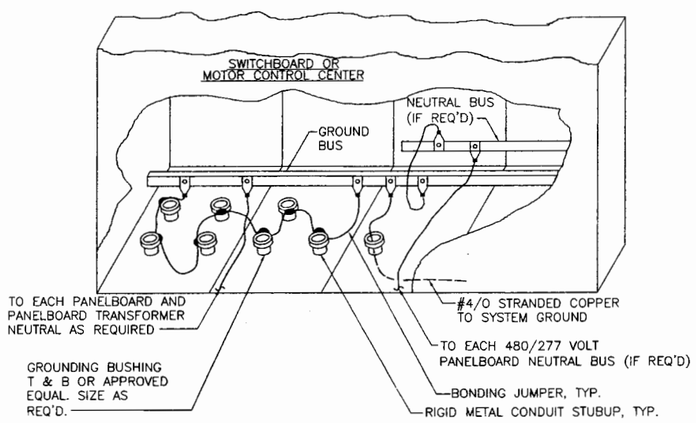

5 E-5000 TYPICAL SWITCHBOARD/MCC GROUNDING DETAIL
SCALE: NONE

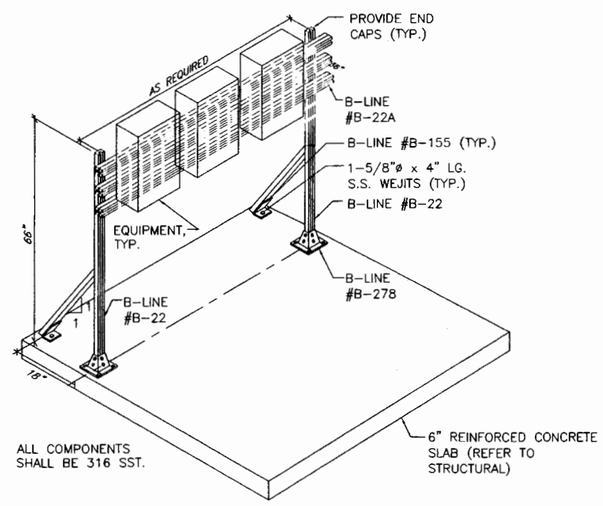

6 E-5000 OUTDOOR EQUIPMENT MOUNTING DETAIL
SCALE: NONE

"NOT FOR CONSTRUCTION"
90% REVIEW

NO	DATE	CLASS REV	DESCRIPTION	DWN	VER	CHKD	SUB	APP

HDR ENGINEERING INC.
2155 LOUISIANA BLVD., NE
SUITE 9500
ALBUQUERQUE, NM 87110
MAIN: (505) 830-5400 FAX: (505) 830-5404

SERF EXPANSION

ELECTRICAL STANDARD DETAILS

BLDG. 3093 TA-03

DRAWN	B.Q.
DESIGN	D.B.
CHECKED	P.D.
DATE	10-24-11

SUBMITTED APPROVED FOR RELEASE

Los Alamos NATIONAL LABORATORY PO Box 1663 Los Alamos, New Mexico 87545

SHEET E-5000
58 OF 67

CLASSIFICATION UNCLASSIFIED REVIEWER DATE 11/7/11

PROJECT ID	DRAWING NO	REV
102310	C-55752	0

ECN-11-TA-03-1398-0000-0265

C:\pwworking\phx\d0224126\102310-E-5000-R0.dwg, Oct 24, 2011 @ 4:43pm

GENERAL NOTES:
(*) INDICATES THAT THE DIMENSION FOR TOP, BOTTOM, AND SIDE CONCRETE COVER IS NOMINAL.

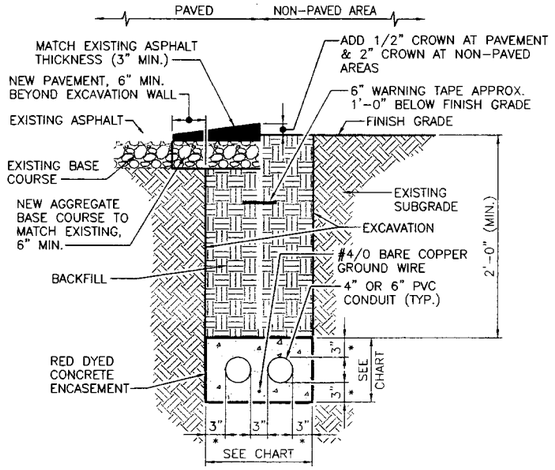

1 E-5001 TYPICAL DUCTBANK INSTALLATION
SCALE: NONE

DUCTBANK SIZING CHART

DUCTBANK	4" CONDUIT		6" CONDUIT	
	WIDTH	HEIGHT	WIDTH	HEIGHT
ONE-WAY	11"	11"	1'-1"	1'-1"
TWO-WAY	1'-6"	11"	1'-10"	1'-1"
THREE-WAY	2'-2"	11"	2'-8"	1'-1"
FOUR-WAY (SQ.)	1'-6"	1'-6"	1'-10"	1'-10"
FOUR-WAY (FLAT)	2'-9"	11"	3'-6"	1'-1"
SIX-WAY	2'-2"	1'-6"	2'-8"	1'-10"
NINE-WAY	2'-2"	2'-2"	2'-8"	2'-8"

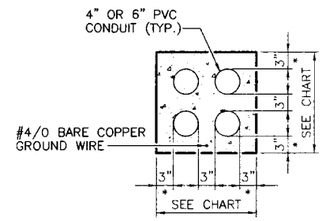

3 E-5001 TYPICAL FOUR-WAY DUCTBANK (SQUARE)
SCALE: NONE

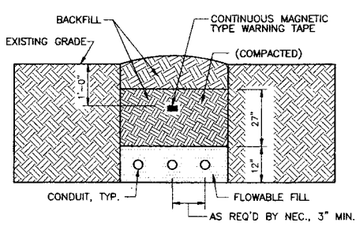

2 E-5001 DIRECT BURIED CONDUIT DETAIL
SCALE: NONE

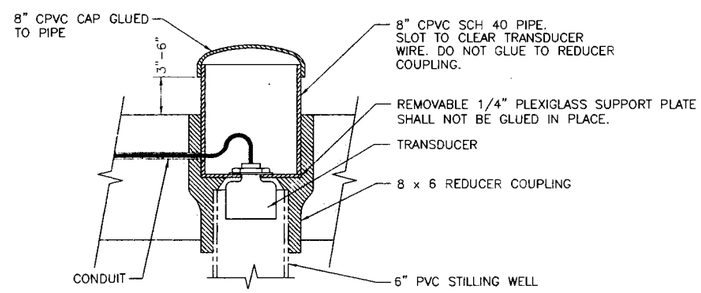

4 E-5001 TRANSDUCER MOUNTING DETAIL
SCALE: NONE

"NOT FOR CONSTRUCTION"
90% REVIEW

NO	DATE	CLASS REV	DESCRIPTION	DWN	VER	CHKD	SUB	APP

HDR ENGINEERING INC.
2155 LOUISIANA BLVD., NE, SUITE 9500 ALBUQUERQUE, NM 87110 MAIN (505) 830-6400 FAX (505) 830-5454

SERF EXPANSION

ELECTRICAL STANDARD DETAILS

BLDG. 3093 TA-03

DRAWN	B.O.
DESIGN	D.B.
CHECKED	P.D.
DATE	10-24-11

SUBMITTED
APPROVED FOR RELEASE

Los Alamos NATIONAL LABORATORY PO Box 1663 Los Alamos, New Mexico 87545

SHEET E-5001
59 OF 67

CLASSIFICATION UNCLASSIFIED REVIEWER DATE 11/7/11

PROJECT ID 102310 DRAWING NO C-55752 REV 0

ECN-11-TA-03-1398-0000-0265

C:\pwworking\ph\d0724126\102310-E-5001-R0.dwg, Oct 24, 2011 @ 4:44pm

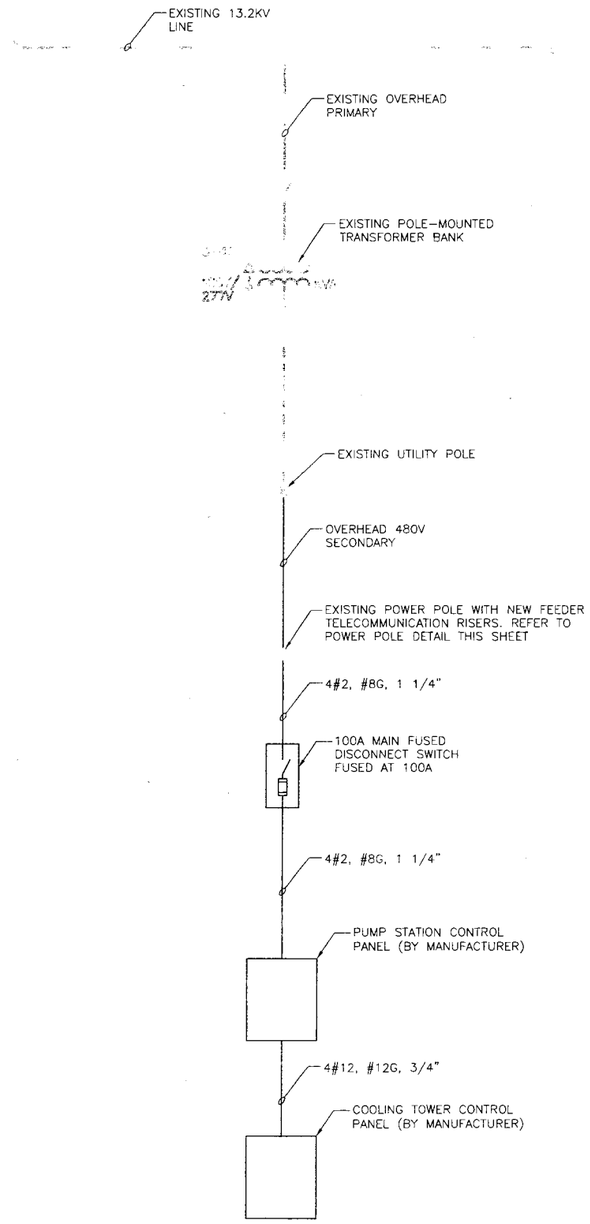

PUMP STATION ONE-LINE DIAGRAM

SCALE: NONE

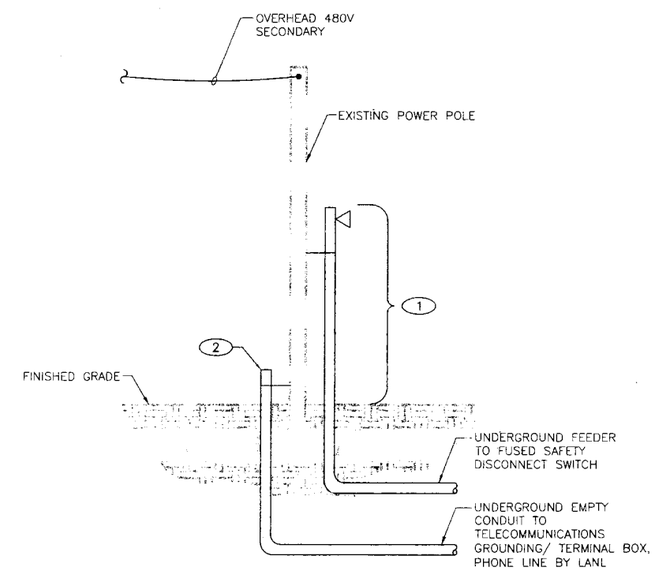

POWER POLE RISER DETAIL

SCALE: NONE

GENERAL NOTES:

1. REFER TO SPECIFICATIONS SECTION 33 3200.

KEYED NOTES:

1. 1 1/4" RIGID POLE RISER COMPLETE WITH STAND-OFF BRACKETS AND WEATHERHEAD.
2. STUB-UP AND EXTEND CONDUIT UPWARD ON POLE MINIMUM 3'-0" ABOVE GRADE.

"NOT FOR CONSTRUCTION" 90% REVIEW

NO	DATE	CLASS REV	DESCRIPTION	DWN	VER	CHKD	SUB	APP

HDR ENGINEERING INC.
2155 LOUISIANA BLVD., NE
SUITE 9500
ALBUQUERQUE, NM 87110
MAIN: (505) 830-5400 FAX: (505) 830-5454

SERF EXPANSION

ELECTRICAL ONE-LINE DIAGRAM - BLOW DOWN PUMP STATION

BLDG. 3093 TA-03

DRAWN	B.Q
DESIGN	D.B.
CHECKED	P.D.
DATE	10-24-11

SUBMITTED

APPROVED FOR RELEASE

Los Alamos NATIONAL LABORATORY PO Box 1663 Los Alamos, New Mexico 87545

SHEET E-6003

65 OF 67

CLASSIFICATION UNCLASSIFIED REVIEWER DATE 11/7/11

PROJECT ID	DRAWING NO	REV
102310	C-55752	0

ECN-11-TA-03-1398-0000-0265

C:\pwworking\phx\d0224126\102310-E-6003-R0.dwg, Oct 25, 2011 @ 7:17am

ENV-RCRA-12-0059

ENCLOSURE 1

LAUR-12-10463

SANITARY EFFLUENT RECLAMATION FACILITY (SERF) EXPANSION PROJECT

STRUCTURAL DRAWINGS FOR CONCRETE RELATED CONSTRUCTION ACTIVITIES
OCTOBER 14, 2011
DESIGN–BUILD DELIVERY

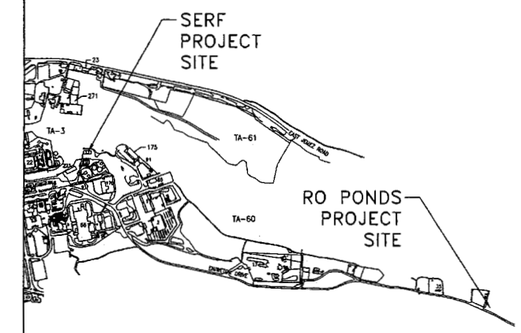

LOCATION PLAN
SCALE: NONE

LIST OF DRAWINGS

REVISION NUMBER	SHEET NUMBER	DISCIPLINE/SHEET NUMBER	DRAWING TITLE
0	1	G-0001	COVER SHEET/INDEX
0	2	C-0001	GENERAL NOTES
0	3	C-0002	LEGEND AND ABBREVIATIONS
0	4	C-1000	OVERALL SITE SURVEY
0	5	C-1001	SERF SITE AND PIPING PLAN
0	6	C-1002	SERF GRADING PLAN
0	7	C-1003	RO REJECT EVAP PONDS SITE AND PIPING PLAN
0	8	C-1004	RO REJECT EVAP PONDS GRADING PLAN
0	9	C-1005	SERF PLAN AND PROFILE
0	10	C-3000	RO REJECT EVAP PONDS SECTIONS
0	11	C-3001	RO REJECT EVAP PONDS DETAIL SECTIONS
0	12	C-5000	PIPING DETAILS
0	13	C-5001	MISCELLANEOUS DETAILS
1	14	S-0001	GENERAL NOTES
1	15	S-1000	SERF FOUNDATION PLAN
1	16	S-1001	SERF FRAMING PLAN
0	17	S-1002	400,000 GAL STORAGE TANK PLAN
1	18	S-3000	SERF FOUNDATION SECTIONS AND DETAILS
0	19	S-3001	SERF FRAMING SECTIONS AND DETAILS
0	20	S-3002	SERF FRAMING SECTIONS AND DETAILS
0	21	S-4000	SERF BUILDING SECTIONS
0	22	S-4001	SERF BUILDING SECTIONS
0	23	S-4002	400,000 GAL STORAGE TANK SECTION AND DETAIL
0	24	S-5000	STANDARD DETAILS
0	25	S-5001	STANDARD DETAILS
0	35	P-0001	PLUMBING LEGEND AND ABBREVIATIONS
0	36	P-1000	SERF PLUMBING PLAN
0	37	P-5000	STANDARD DETAILS
0	38	P-7000	PLUMBING SCHEDULES

REVISION NUMBER	SHEET NUMBER	DISCIPLINE/SHEET NUMBER	DRAWING TITLE
0	39	D-1000	EXISTING SERF BUILDING GENERAL PROCESS EQUIPMENT ARRANGEMENT PLAN
0	40	D-1001	SERF BUILDING GENERAL PROCESS EQUIPMENT ARRANGEMENT PLAN
0	41	D-1002	PUMP STATION PLAN AND SECTION
0	42	D-3000	SERF BUILDING PROCESS SECTIONS
0	43	M-0001	MECHANICAL LEGEND
0	44	M-1000	SERF BUILDING HVAC PLAN
0	45	M-5000	STANDARD DETAILS
0	46	M-7000	MECHANICAL EQUIPMENT SCHEDULES
0	47	E-0001	ELECTRICAL LEGEND
0	48	E-1000	EXISTING SERF BUILDING ELECTRICAL PLAN
0	49	E-1001	SERF BUILDING ELECTRICAL SITE PLAN
0	50	E-1002	SERF BUILDING GROUNDING PLAN
0	51	E-1003	SERF BUILDING LIGHTNING PROTECTION PLAN
0	52	E-1004	SERF BUILDING POWER PLAN
0	53	E-1005	SERF BUILDING LIGHTING PLAN
0	54	E-1006	SERF BUILDING SPECIAL SYSTEMS PLAN
0	55	E-1007	40,000 GALLON TANK POWER PLAN
0	56	E-1008	BLOWDOWN PUMP STATION SITE PLAN
0	57	E-1009	BLOWDOWN PUMP STATION POWER PLAN
0	58	E-5000	STANDARD DETAILS
0	59	E-5001	STANDARD DETAILS
0	60	E-5002	FIRE ALARM RISER DIAGRAM
0	61	E-5003	GROUNDING SYSTEM DIAGRAM
0	62	E-6000	EXISTING SERF BUILDING ONE-LINE MODIFICATIONS
0	63	E-6001	ONE-LINE SWB-6
0	64	E-6002	ONE-LINE MCC-B
0	65	E-6003	ONE-LINE BLOWDOWN PUMP STATION
0	66	E-6004	PANELBOARD SCHEDULES
0	67	E-7000	LIGHTING FIXTURE SCHEDULE
SUPPLEMENTAL DRAWING FROM WESTERN STATES FIRE PROTECTION COMPANY			FIRE SPRINKLER SYSTEM (DRAWING 1 OF 1)
SUPPLEMENTAL DRAWINGS FROM SIEMENS FOR REFERENCE			P&IDS (DRAWINGS 1-30)
SUPPLEMENTAL DRAWINGS FROM SIEMENS FOR REFERENCE			P&FDS (DRAWINGS 1-5)

DRAWINGS TO BE USED FOR REFERENCE PURPOSES ONLY. DRAWINGS TO BE PROVIDED WITH FUTURE SUBMITTAL(S).

DRAWINGS NOT PART OF THIS SUBMITTAL. DRAWINGS TO BE PROVIDED WITH FUTURE SUBMITTAL(S).

LANL BUILDING OFFICIAL
APPROVED
105567
10-19-11
11-094
REVIEWED FOR LANL STANDARDS COMPLIANCE PER ISO 341 - 2 OF 10

CHRIS RODRIGUEZ
NEW MEXICO
16239
LICENSED PROFESSIONAL ENGINEER
9/23/11

NO	DATE	CLASS REV	DESCRIPTION	DWN	VER	CHKD	SUB	APP

HDR ENGINEERING INC.
2155 LOUISIANA BLVD., NE
SUITE 9500
ALBUQUERQUE, NM 87110
MAIN: (505) 830-5400 FAX:
(505) 830-5454

SERF EXPANSION

COVER SHEET/INDEX

DRAWN	HDR GWB
DESIGN	HDR GWB
CHECKED	HDR GWB
DATE	10-14-11

BLDG. TA–

SUBMITTED

APPROVED FOR RELEASE

Los Alamos NATIONAL LABORATORY
PO Box 1663
Los Alamos, New Mexico 87545

SHEET G-0001

1 OF 67

CLASSIFICATION UNCLASSIFIED

REVIEWER

DATE 10/17/11

PROJECT ID	DRAWING NO	REV
102310	C-55752	0

ECN-11-TA-03-1398-0000-0265

C:\pwworking\phx\d0224114\102310-G-0001-R0.dwg, Oct 14, 2011 @ 7:04am

GENERAL CONSTRUCTION NOTES:

1. THE SUBCONTRACTOR SHALL ABIDE BY ALL LOCAL, STATE AND FEDERAL RULES AND REGULATIONS WHICH APPLY TO THE CONSTRUCTION OF THESE IMPROVEMENTS AND SHALL CONFORM WITH THE LATEST STANDARD DETAILS AND SPECIFICATIONS OF THE LOS ALAMOS NATIONAL LABORATORIES AND THE GUIDELINES FOR SITE DEVELOPMENT AND INFRASTRUCTURE CONSTRUCTION. IF THERE IS A CONFLICT, THE STRICTER REQUIREMENT SHALL GOVERN.
2. LOCATIONS, ELEVATIONS AND DIMENSIONS OF EXISTING UTILITIES, STRUCTURES AND OTHER FEATURES ARE SHOWN ACCORDING TO THE BEST INFORMATION AVAILABLE AT THE TIME OF THE PREPARATION OF THESE PLANS, BUT DO NOT PURPORT TO BE ABSOLUTELY CORRECT AND ARE APPROXIMATE. THE SUBCONTRACTOR SHALL BE RESPONSIBLE FOR VERIFYING LOCATIONS, ELEVATIONS AND DIMENSIONS OF ALL EXISTING UTILITIES, STRUCTURES AND OTHER FEATURES WHICH PERTAIN TO AND AFFECT THE CONSTRUCTION OF THIS PROJECT, WHICH SHALL BE CONSIDERED INCIDENTAL TO COST OF COMPLETING CONSTRUCTION RELATED WORK. IF THE LOCATION OF A UTILITY IS UNKNOWN, ELEVATION IS INDICATED "UNK".
3. FACILITIES WHICH ARE NOT SPECIFICALLY LOCATED WITH ACTUAL HORIZONTAL AND VERTICAL CONTROLS ARE LOCATED APPROXIMATELY AND TO THE BEST AVAILABLE INFORMATION. ALL ELEVATIONS AND LOCATIONS OF EXISTING PIPING, UTILITIES, AND STRUCTURES AFFECTING NEW WORK SHALL BE FIELD VERIFIED BY THE SUBCONTRACTOR PRIOR TO BEGINNING CONSTRUCTION, WHICH SHALL BE CONSIDERED INCIDENTAL TO THE COST OF COMPLETING CONSTRUCTION RELATED WORK.
4. PRIOR TO FABRICATION OF PIPE, SUBCONTRACTOR SHALL VERIFY THE HORIZONTAL AND VERTICAL LOCATIONS OF ALL OBSTRUCTIONS WITH POTENTIAL TO CHANGE THE PIPE ALIGNMENT AND VERIFY EXISTING SIZE AND PIPE MATERIAL TYPE AT ALL POINTS OF CONNECTION TO EXISTING UTILITY LINES PRIOR TO INSTALLATION. THIS WORK IS INCIDENTAL TO COST OF PIPE INSTALLATION. SHOULD A CONFLICT EXIST, THE SUBCONTRACTOR SHALL NOTIFY THE ENGINEER SO THAT THE CONFLICT CAN BE RESOLVED WITH MINIMAL DELAY.
5. THE SUBCONTRACTOR SHALL POTHOLE EXISTING UTILITIES AHEAD PRIOR TO CONSTRUCTION TO ALLOW FOR ANY NECESSARY ADJUSTMENTS OR REALIGNMENTS, AND TO VERIFY PIPE TYPES FOR ORDERING PROPER TRANSITION AND/OR TIE-IN FITTINGS WHICH MAY BE REQUIRED, WHICH SHALL BE CONSIDERED INCIDENTAL TO THE COST OF COMPLETING CONSTRUCTION RELATED WORK.
6. THE OWNER'S REPRESENTATIVE SHALL BE NOTIFIED 24 HOURS PRIOR TO ANY CONSTRUCTION WORK. CONSTRUCTION WORK PERFORMED WITHOUT NOTIFICATION AND APPROVAL BY THE OWNER'S REPRESENTATIVE SHALL BE SUBJECT TO EXPOSURE, INSPECTION, AND REPLACEMENT AT THE SUBCONTRACTOR'S EXPENSE.
7. UTILITIES SHALL BE NOTIFIED AT LEAST 48 HOURS IN ADVANCE OF EXCAVATION, DISCONNECTION, CONNECTION, OR REMOVAL OF ANY PIPE, CONDUIT, OR POWER SUPPLY IN ORDER FOR THE AFFECTED UTILITY TO HAVE A REPRESENTATIVE AT THE PROJECT SITE.
8. ANY ADJUSTMENT OR RELOCATION OF EXISTING UTILITIES (UNDERGROUND, SURFACE, OR OVERHEAD) SHALL BE COORDINATED WITH THE OWNER OF THE AFFECTED UTILITY AT LEAST 48 HOURS PRIOR TO CONSTRUCTION.
9. THE SUBCONTRACTOR SHALL COORDINATE WORK SCHEDULES WITH THE OWNER'S REPRESENTATIVE SO AS TO PREVENT ANY CONFLICTING WORK CONDITIONS.
10. ALL FACILITIES DAMAGED OR REMOVED SHALL BE REPLACED AT THE SUBCONTRACTOR'S EXPENSE INCLUDING DAMAGE TO ANY EXISTING SIDEWALKS. DAMAGE TO EXISTING LANDSCAPING BY SUBCONTRACTOR SHALL BE REPAIRED BY THE SUBCONTRACTOR (I.E., ALL RUTS FILLED WITH CLEAN ROCK OR TURF TO MATCH THE SURROUNDING GROUND). EXCESS SOIL, ROCK, ETC. SHALL BE REMOVED TO LEAVE THE SITES CLEAN. ALL LANDSCAPING WHICH IS DISTURBED DURING CONSTRUCTION SHALL BE RESTORED TO ORIGINAL CONDITIONS OR REPLACED IN ACCORDANCE WITH THESE DOCUMENTS.
11. THE GENERAL SUBCONTRACTOR/SUBCONTRACTOR SHALL BE RESPONSIBLE FOR ALL EXPENSES TO OBTAIN ALL REQUIRED NEW MEXICO CONSTRUCTION INDUSTRIES DIVISION (CID) PERMITS FOR BUILDING, ELECTRICAL, MECHANICAL, ETC. FOR THIS PROJECT AND SCHEDULE ALL REQUIRED INSPECTIONS.
12. THE SUBCONTRACTOR SHALL NOT INSTALL ITEMS AS SHOWN ON THESE PLANS WHEN FIELD CONDITIONS ARE DIFFERENT THAN SHOWN IN THE PLANS. SUCH CONDITIONS SHALL BE BROUGHT TO THE ATTENTION OF THE ENGINEER IN A TIMELY MANNER. IN THE EVENT THE SUBCONTRACTOR DOES NOT NOTIFY THE ENGINEER IN A TIMELY MANNER, THE SUBCONTRACTOR ASSUMES FULL RESPONSIBILITY AND EXPENSE FOR ANY REVISIONS NECESSARY, INCLUDING ENGINEERING DESIGN FEES.
13. THE TERM "REMOVE" USED IN THIS PLAN SET INCLUDES THE DISPOSAL OF SAID MATERIAL. SUBCONTRACTOR SHALL BE RESPONSIBLE FOR DISPOSING OF ALL DEBRIS AND OTHER SUCH WASTE MATERIAL AT DISPOSAL SITES APPROVED BY GOVERNMENTAL AGENCIES REGULATING THE DISPOSAL OF SUCH MATERIALS.
14. IF ANY PREVIOUSLY UNIDENTIFIED ARCHEOLOGICAL OR CULTURAL ARTIFACTS ARE FOUND DURING CONSTRUCTION, WORK SHALL STOP IN THAT AREA AND THE SUBCONTRACTOR SHALL NOTIFY THE ENGINEER IMMEDIATELY, AND BEFORE PROCEEDING FURTHER, ONE OF THE FOLLOWING AGENCIES SHALL BE NOTIFIED: THE NEW MEXICO STATE HISTORIC PRESERVATION OFFICER.
15. THE SUBCONTRACTOR SHALL ADJUST ALL SURFACE FEATURES AFFECTED BY CONSTRUCTION ACTIVITIES TO FINAL GRADE, WHICH SHALL BE CONSIDERED INCIDENTAL TO THE COST OF COMPLETION RELATED CONSTRUCTION WORK. SURFACE FEATURES INCLUDE BUT ARE NOT LIMITED TO MANHOLES WITH ASSOCIATED RING COVER, AND CONCRETE SURFACE COMPLETION, VALVE VAULTS AND ACCESS COVERS, ETC. ANY DAMAGE TO THESE FEATURES SHALL BE REPLACED AT SUBCONTRACTORS EXPENSE.

SAFETY:

1. SUBCONTRACTOR SHALL COMPLY WITH APPLICABLE FEDERAL, STATE, AND LOCAL LAWS, ORDINANCES AND REGULATIONS CONCERNING CONSTRUCTION SAFETY AND HEALTH.
2. ONLY THE SUBCONTRACTOR SHALL BE RESPONSIBLE FOR SAFETY OF ALL WORK. ALL WORK, INCLUDING WORK WITHIN TRENCHES, SHALL BE IN ACCORDANCE WITH THE OCCUPATIONAL SAFETY AND HEALTH ACT (OSHA).
3. SUBCONTRACTOR SHALL TAKE NECESSARY SAFETY PRECAUTIONS AS REQUIRED BY FEDERAL, STATE AND LOCAL AUTHORITIES TO PROTECT PEDESTRIAN AND VEHICULAR TRAFFIC IN THE CONSTRUCTION AREA, WHICH INCLUDE BUT ARE NOT LIMITED TO: MAINTAINING ADEQUATE WARNING SIGNS, BARRICADES, LIGHTS, GUARD FENCES, WALKS AND BRIDGES.
4. SUBCONTRACTOR SHALL MAINTAIN ALL CONSTRUCTION BARRICADES AND SIGNAGE AT ALL TIMES AND SHALL VERIFY THE PROPER LOCATION OF ALL BARRICADING AT THE BEGINNING AND END OF EACH DAY.
5. ALL EXCAVATION, TRENCHING, AND SHORING ACTIVITIES SHALL BE CARRIED OUT IN ACCORDANCE WITH OSHA 29 CFR 1926.650 SUBPART P AS A MINIMUM STANDARD.
6. IF A PAVEMENT DROP-OFF IS CREATED DURING CONSTRUCTION, THE SUBCONTRACTOR SHALL INITIATE PROTECTIVE ACTION IN ACCORDANCE WITH THE PROJECT REQUIREMENTS. THIS WORK SHALL BE CONSIDERED INCIDENTAL TO THE COMPLETION OF THE PROJECT AND NO SEPARATE MEASUREMENT OR PAYMENT WILL BE MADE THEREFOR.

EROSION CONTROL AND ENVIRONMENTAL PROTECTION:

1. THE SUBCONTRACTOR SHALL CONFORM TO ALL LOCAL AND FEDERAL DUST AND EROSION CONTROL REGULATIONS. THE SUBCONTRACTOR SHALL PREPARE AND OBTAIN ANY DUST CONTROL OR EROSION CONTROL PERMITS FROM THE REGULATORY AGENCIES.
2. THE SUBCONTRACTOR SHALL SECURE NPDES PERMITS REQUIRED BY APPLICABLE LOCAL, STATE, AND FEDERAL REGULATIONS.
3. THE SUBCONTRACTOR SHALL PROMPTLY REMOVE ANY MATERIAL EXCAVATED WITHIN THE PUBLIC RIGHT-OF-WAY OR ADJACENT PROPERTY TO KEEP IT FROM WASHING OFF THE PROJECT SITE.
4. THE SUBCONTRACTOR SHALL INSTALL ANY TEMPORARY DRAINAGE CONTROL MEASURES NECESSARY TO SAFELY CONVEY STORM WATER RUNOFF TO EXISTING OUTFALLS. SUBCONTRACTOR SHALL ENSURE THAT NO SOIL ERODES FROM THE SITE ONTO ADJACENT PROPERTY BY CONSTRUCTION OF TEMPORARY EROSION CONTROL BERMS OR INSTALLING SILT FENCES AT THE PROPERTY LINES (OR LIMITS OF CONSTRUCTION IF DESIGNATED) AND WETTING SOIL TO PREVENT IT FROM BLOWING. ANY DAMAGE TO PRIVATE PROPERTY OR IMPROVEMENTS CONSTRUCTED BY THE SUBCONTRACTOR RESULTING FROM STORM WATER FLOWS SHALL BE THE SOLE RESPONSIBILITY OF THE SUBCONTRACTOR.
5. WATERING, AS REQUIRED FOR CONSTRUCTION DUST CONTROL, SHALL BE CONSIDERED INCIDENTAL TO CONSTRUCTION AND NO SEPARATE MEASUREMENT OR PAYMENT WILL BE MADE. CONSTRUCTION AREAS SHALL BE WATERED FOR DUST CONTROL IN COMPLIANCE WITH GOVERNMENT ORDINANCES. THE SUBCONTRACTOR SHALL COORDINATE WITH THE OWNER FOR WATER AVAILABILITY AND USE. THE SUBCONTRACTOR SHALL SUPPLY ALL EQUIPMENT AND MATERIALS NECESSARY FOR PROVIDING WATER.
6. ANY AREAS DISTURBED BY CONSTRUCTION AND NOT IDENTIFIED FOR SPECIFIC PERMANENT TREATMENT BY THE PROJECT LANDSCAPING PLAN OR IMPERVIOUS SURFACES ON THE SITE PLAN SHALL BE REVEGETATED WITH NATIVE PERENNIAL VEGETATION. SUBCONTRACTOR SHALL COORDINATE SPECIFIC TREATMENT WITH THE ENGINEER.
7. ALL WASTE PRODUCTS FROM THE CONSTRUCTION SITE, INCLUDING ITEMS DESIGNED FOR REMOVAL, CONSTRUCTION WASTE, CONSTRUCTION EQUIPMENT WASTE PRODUCTS (OIL, GAS, TIRES, ETC.), GARBAGE, GRUBBING, EXCESS CUT MATERIAL, VEGETATIVE DEBRIS, ETC. SHALL BE APPROPRIATELY DISPOSED OF OFFSITE AT NO ADDITIONAL COST TO THE OWNER. THE SUBCONTRACTOR SHALL BE RESPONSIBLE FOR OBTAINING ALL PERMITS REQUIRED FOR HAUL OR DISPOSAL OF WASTE PRODUCTS, AND TO ENSURE THAT THE WASTE DISPOSAL SITE COMPLIES WITH GOVERNMENT REGULATIONS REGARDING THE ENVIRONMENT, ENDANGERED SPECIES, AND ARCHAEOLOGICAL RESOURCES.
8. ALL EXCAVATED MATERIAL THAT IS NOT REQUIRED TO BE REUSED MUST BE REMOVED FROM THE PROJECT AREA WITHIN A TIMELY MANNER AS APPROVED BY ENGINEER. SPOIL PILES WILL BE ALLOWED ONLY AS DIRECTED BY THE ENGINEER AND LOS ALAMOS NATIONAL LABORATORIES.
9. THE SUBCONTRACTOR SHALL BE RESPONSIBLE FOR THE CLEANUP AND REPORTING OF SPILLS OF HAZARDOUS MATERIALS ASSOCIATED WITH THE CONSTRUCTION SITE. HAZARDOUS MATERIALS, INCLUDES GASOLINE, DIESEL FUEL, MOTOR OIL, SOLVENTS, CHEMICALS, PAINT, ETC. WHICH MAY BE A THREAT TO THE ENVIRONMENT. THE SUBCONTRACTOR SHALL REPORT THE DISCOVERY OF PAST OR PRESENT SPILLS TO PROJECT SUBCONTRACTOR TECHNICAL REPRESENTATIVE (STR) IN ACCORDANCE WITH LANL REQUIREMENTS.
10. THE SUBCONTRACTOR SHALL PROPERLY HANDLE AND DISPOSE OF ALL ASPHALT REMOVED ON THE PROJECT BY HAULING TO AN APPROVED DISPOSAL SITE IN ACCORDANCE WITH THE REQUIREMENTS OF THE NEW MEXICO SOLID WASTE ACT.
11. THE SUBCONTRACTOR SHALL COMPLY WITH ALL APPLICABLE REGULATIONS CONCERNING CONSTRUCTION NOISE AND HOURS OF OPERATION AS STATED IN THE SPECIFICATIONS.
12. THE SUBCONTRACTOR SHALL COMPLY WITH ALL APPLICABLE REGULATIONS CONCERNING SURFACE AND UNDERGROUND WATER, CONTACT WITH SURFACE WATER BY CONSTRUCTION EQUIPMENT AND PERSONNEL SHALL BE MINIMIZED, EQUIPMENT MAINTENANCE AND REFUELING OPERATIONS SHALL BE PERFORMED IN AN ENVIRONMENTALLY SAFE MANNER IN COMPLIANCE WITH GOVERNMENT REGULATIONS.
13. BMPs IN ACCORDANCE WITH THE PROJECT SWPPP WILL BE INSTALLED PRIOR TO ANY SOIL DISTURBING ACTIVITIES.
14. ALL RIPRAP MATERIAL USED ON THIS PROJECT SHALL BE A NATURAL ROCK MATERIAL CONFORMING TO THE SIZE AND MATERIAL PROPERTY REQUIREMENTS SET FORTH IN THE PROJECT SPECIFICATIONS.
15. SITE STABILIZATION SHALL BE IMPLEMENTED PER NPDES CONSTRUCTION GENERAL PERMIT REQUIREMENTS IDENTIFIED IN THE SWPPP.

CONSTRUCTION LIMITS:

1. SUBCONTRACTOR SHALL WORK WITHIN THE CONSTRUCTION LIMITS AS SHOWN ON THE PLANS. EQUIPMENT TRAFFIC OUTSIDE THESE LIMITS SHALL NOT BE PERMITTED WITHOUT WRITTEN PERMISSION OF THE ENGINEER.
2. PRIOR TO BEGINNING ANY CONSTRUCTION ACTIVITIES WITHIN ADJACENT RIGHT-OF-WAY OR WITHIN PROPERTY NOT OWNED BY THE OWNER OF THE PROJECT SITE, THE SUBCONTRACTOR SHALL OBTAIN ALL PERMITS AND PERMISSIONS IN WRITING.
3. OVERNIGHT PARKING OF CONSTRUCTION VEHICLES ON PRIVATE PROPERTY IS THE SOLE RESPONSIBILITY OF THE SUBCONTRACTOR.
4. SUBCONTRACTOR SHALL PARK EQUIPMENT AND VEHICLES SO AS NOT TO INTERFERE WITH NORMAL ACTIVITIES OF THE EXISTING FACILITIES.

DEMOLITION:

1. THE OWNER HAS THE FIRST RIGHT TO SALVAGE ANY ITEMS IDENTIFIED FOR DEMOLITION. PRIOR TO DEMOLITION SUBCONTRACTOR SHALL COORDINATE WITH OWNER TO IDENTIFY ITEMS TO BE SALVAGED. SUBCONTRACTOR SHALL REMOVE AND PLACE SALVAGED ITEMS IN OWNERS DESIGNATED AREA ONSITE. SUBCONTRACTOR SHALL EXERCISE DUE CARE NOT TO DAMAGE ITEMS WHICH ARE TO BE SALVAGED TO THE OWNER.
2. REMOVE ALL CONDUIT, CONTROL PANELS, CONTROL WIRING AND APPURTENANCES ASSOCIATED WITH EQUIPMENT TO BE REMOVED
3. REMOVE EQUIPMENT PADS, MOUNTINGS AND PIPE SUPPORTS IF PRESENT
4. GRING ATTACHMENT BOLTS FLUSH WITH CONCRETE.
5. PATCH CONCRETE IN ACCORDANCE WITH SPECIFICATIONS
6. DO NOT DAMAGE EXISTING STRUCTURES WHICH REMAIN

GENERAL UTILITIES:

1. ANY UTILITY LINES, PIPELINES, OR UNDERGROUND UTILITY LINES SHOWN ON THE PLANS ARE SHOWN IN AN APPROXIMATE LOCATION ONLY BASED ON THE INFORMATION PROVIDED TO THE ENGINEER BY OTHERS THAT MAY BE INACCURATE OR INCOMPLETE. ADDITIONALLY, UNDERGROUND LINES MAY EXIST THAT ARE NOT SHOWN. THE SUBCONTRACTOR SHALL VERIFY THE LOCATION OF ANY UTILITY LINE, PIPELINE, OR UNDERGROUND UTILITY LINE IN OR NEAR THE AREA OF THE WORK, WHICH SHALL BE CONSIDERED INCIDENTAL TO COST OF COMPLETING CONSTRUCTION RELATED WORK. ANY DAMAGE TO ANY OTHER UTILITIES OR COLLATERAL DAMAGE CAUSED BY THE SUBCONTRACTOR SHALL BE THE FULL RESPONSIBILITY OF THE SUBCONTRACTOR.
2. SUBCONTRACTOR SHALL EXERCISE DUE CARE TO AVOID DISTURBING ANY EXISTING UTILITIES, ABOVE OR BELOW GROUND. UTILITIES THAT ARE DAMAGED BY CONSTRUCTION ACTIVITIES SHALL BE REPAIRED OR REPLACED AT THE SUBCONTRACTOR'S EXPENSE. SUBCONTRACTOR SHALL COORDINATE WITH UTILITY COMPANIES TO PREVENT DISRUPTION TO SERVICE.
3. ALL UTILITY LINES NOT SPECIFICALLY DESIGNATED TO BE REMOVED AND REPLACED ON THE PLANS, SHALL BE MAINTAINED IN SERVICE. SHORING, SHEETING AND OTHER MEANS OF SUPPORT SHALL BE EMPLOYED BY THE SUBCONTRACTOR TO PREVENT DAMAGE OR LOSS OF THESE EXISTING UTILITIES. BEAM AND CABLE OR OTHER ADEQUATE SUPPORTS SHALL BE USED FOR TEMPORARY SUPPORT OF ALL UTILITY LINES AS NECESSARY.
4. SUBCONTRACTOR SHALL PROVIDE A UTILITY SUPPORT DESIGN FOR ALL LARGE AND/OR CRITICAL SERVICES (E.G. COMMUNICATIONS AND ELECTRIC DUCT BANKS, EXPOSED GRAVITY LINE JOINTS, PRESSURIZED WATER LINES, SEWER FORCE MAINS, ETC.). SUPPORT FOR THESE CRITICAL SERVICES SHALL BE DESIGNED AND SEALED BY REGISTERED PROFESSIONAL ENGINEER AND SUBMITTED TO OWNER FOR APPROVAL. THE DESIGN AND INSTALLATION OF BOTH CRITICAL AND NONCRITICAL SUPPORTS SHALL BE PERFORMED AT THE SUBCONTRACTOR'S EXPENSE. ANY DAMAGE TO EXISTING UTILITIES SHALL PROMPTLY BE REPAIRED AT THE SUBCONTRACTOR'S EXPENSE. THE SUBCONTRACTOR SHALL NOTIFY THE ENGINEER IMMEDIATELY OF ANY SIGNIFICANT DEVIATION OF EXPOSED UTILITIES FROM THE LOCATIONS SHOWN ON THE PLANS SO THAT CONFLICTS CAN BE RESOLVED IN A TIMELY MANNER.
5. SUBCONTRACTOR SHALL COORDINATE WITH PERTINENT UTILITY COMPANIES OF ALL EXISTING UTILITY LINES AND APPURTENANCES ENCOUNTERED DURING CONSTRUCTION THAT REQUIRE RELOCATION. NO ADDITIONAL COMPENSATION WILL BE ALLOWED FOR DELAYS OR INCONVENIENCES CAUSED BY UTILITY COMPANY WORK CREWS. THE SUBCONTRACTOR SHALL RESCHEDULE HIS ACTIVITIES AS NECESSARY TO ALLOW UTILITY CREWS TO PERFORM THEIR REQUIRED WORK.
6. PRIOR TO CONSTRUCTION, THE SUBCONTRACTOR SHALL EXCAVATE AND FIELD VERIFY THE HORIZONTAL AND VERTICAL LOCATIONS OF ALL POTENTIAL CONFLICTING UTILITIES AT NO ADDITIONAL COST TO THE OWNER. SHOULD A CONFLICT EXIST BETWEEN THE FIELD INFORMATION AND THE PLANS, THE SUBCONTRACTOR SHALL NOTIFY THE ENGINEER SO THE CONFLICT CAN BE RESOLVED WITH MINIMUM DELAY. SUBCONTRACTOR SHALL USE VACUUM EXCAVATION TECHNIQUES FOR ALL INITIAL TRENCHING OPERATIONS TO LOCATE AND VERIFY ALL EXISTING UTILITIES. THE COST OF VACUUM EXCAVATION SHALL BE CONSIDERED INCIDENTAL TO THE COST OF ALL TRENCH EXCAVATION WORK.
7. ALL INTERFERING PORTIONS OF ABANDONED UTILITY LINES WHICH ARE EXPOSED AS A RESULT OF CONSTRUCTION SHALL BE IMMEDIATELY REPORTED TO LOS ALAMOS NATIONAL LABORATORIES.
8. SUBCONTRACTOR SHALL COORDINATE ANY REQUIRED UTILITY INTERRUPTIONS WITH THE AFFECTED UTILITY COMPANY A MINIMUM OF THREE WORKING DAYS BEFORE THE INTERRUPTION.
9. EXISTING VALVES SHALL ONLY BE OPERATED BY THE APPROPRIATE UTILITY COMPANY. SUBCONTRACTOR SHALL NOTIFY THE UTILITY A MINIMUM OF SEVEN (7) WORKING DAYS BEFORE ANY VALVE, NEW OR EXISTING, NEEDS TO BE OPERATED.
10. ANY DAMAGE TO THE EXISTING FACILITIES (CURB & GUTTER, PAVEMENT, CONDUITS, LANDSCAPING, UTILITY LINES, ETC.) DURING CONSTRUCTION SHALL BE REPLACED AT THE SUBCONTRACTORS' EXPENSE.

LANL BUILDING OFFICIAL — SIG [signature] — Z# 105567 — DATE 10-19-11 — 11-094 — APPROVED

REVIEWED FOR LANL STANDARDS COMPLIANCE PER ISD 341-2, CH 18

CHRIS RODRIGUEZ — NEW MEXICO — 16239 — LICENSED PROFESSIONAL ENGINEER — 9/22/11

NO	DATE	CLASS REV	DESCRIPTION	DWN	VER	CHKD	SUB	APP

HDR ENGINEERING INC. 2155 LOUISIANA BLVD., NE SUITE 9500 ALBUQUERQUE, NM 87110 MAIN: (505) 830-5400 FAX: (505) 830-5454

SERF EXPANSION

GENERAL NOTES

BLDG. TA-

DRAWN	B.F.
DESIGN	W.C.
CHECKED	E.D.
DATE	10-14-11

SUBMITTED [signature] — APPROVED FOR RELEASE [signature]

Los Alamos NATIONAL LABORATORY PO Box 1663 Los Alamos, New Mexico 87545

SHEET C-0001 — 2 OF 67

CLASSIFICATION UNCLASSIFIED — REVIEWER [signature] — DATE 10/17/11

PROJECT ID 102310 — DRAWING NO C-55752 — REV 0

ECN-11-TA-03-1398-0000-0265

C:\pwworking\phx\d0224116\102310-C-0001-R0.dwg, Oct 13, 2011 @ 4:00pm

ENV-RCRA-12-0059 ENCLOSURE 1 LAUR-12-10463

ABBREVIATIONS (NOT ALL ABBREVIATIONS WILL APPLY TO THIS PROJECT)

A	AIR LINE
AL	ALUMINUM
APPROX.	APPROXIMATE
BD	BLOWDOWN
BLDG.	BUILDING
C	COMMUNICATION LINE
CB	CATCH BASIN (DROP INLET)
CI	CAST IRON
CINT	CENTER FOR INTEGRATED NANOTECHNOLOGIES
C&G	CURB AND GUTTER
CLR	CLEAR
CONC	CONCRETE
CONST	CONSTRUCTION
CCP	CONCRETE CYLINDER PIPE
CT	COOLING TOWER
CTR	COOLING TOWER RETURN
CTS	COOLING TOWER SUPPLY
CU	COPPER
CW	CHILLED WATER
CMP	CORRUGATED METAL PIPE
DIA	DIAMETER
DI	DROP INLET (CATCH BASIN)
E	ELECTRIC LINE
EFF	EFFLUENT
EW	EACH WAY
EB	ELECTRIC BOX
ELEC	ELECTRICAL
EP	ELECTRICAL PROTECTION
EL	ELEVATION
EXIST	EXISTING
EG	EXISTING GRADE
FFE	FINISHED FLOOR ELEVATION
FN	FENCE
FF	FINISH FLOOR
FG	FINISH GRADE
FLG	FLANGE
FLR	FLOOR
FPW/FP	FIRE PROTECTION WATERLINE
FT	FOOT
FM	FORCE MAIN
GPM	GALLONS PER MINUTE
GALV	GALVANIZED
G	GAS
GND	EXISTING GROUND
HC	HANDICAPPED
HDPE	HIGH DENSITY POLYETHYLENE
HPT	HIGH POINT
HWL	HIGH WATER LEVEL
HORIZ	HORIZONTAL
HP	HORSE POWER
ID	INSIDE DIAMETER
INV	INVERT
IB	IRRIGATION VALVE BOX
IRW	IRRIGATION WATER LINE
L	LABNET
LANL	LOS ALAMOS NATIONAL LABORATORY
LB	POUND
LEN	LENGTH
LF	LINEAR FOOT
LPT	LOW POINT
MFG.	MANUFACTURER
MAX	MAXIMUM
MH	MANHOLE
MJ	MECHANICAL JOINT
MIN	MINIMUM
MSTOB	MATERIAL SCIENCE & TECHNOLOGY OFFICE BUILDING
NC	NORMALLY CLOSED
NA	NOT APPLICABLE
NO	NUMBER
OC	ON CENTER
OD	OUTSIDE DIAMETER
OP	OVERHEAD POWER
P	PIPE
PC	POINT OF CURVATURE
PCC	PORTLAND CEMENT CONCRETE
PE/POLY	POLYETHYLENE
PVC	POLY VINYL CHLORIDE
PI	POINT OF INTERSECTION
PIV	POST INDICATOR VALVE
PSI	POUND PER SQUARE INCH
PP	POWER POLE
PRV	PRESSURE RELIEF VALVE
PLS	PURE LIVE SEED
PB	PULL BOX
PT	POINT OF TANGENCY
RAD	RADIUS
RAW	RADIOACTIVE INDUSTRIAL WASTE
RFP	REQUEST FOR PROPOSAL
RGLTR	REGULATOR
RD	ROOF DRAIN
RLW	RADIOACTIVE LIQUID WASTE
S/C	STEAM AND CONDENSATE
SD	STORM DRAIN
SS	SANITARY SEWER
SS FM	SANITARY SEWER FORCE MAIN
SCHED	SCHEDULE
SHT	SHEET
STA	STATION
STL	STEEL
STS	STORM SEWER
SW	SIDEWALK
T	TELEPHONE LINE
TA	TOP OF ASPHALT / PAVEMENT
TC	TOP OF CONCRETE
TG	TOP OF GROUND / GRATE
TOC	TOP OF CURB
TU/TEL	TELEPHONE
TW	TOP OF WALL
T/P	TOP OF PIPE
T/C	TOP OF COMMUNICATION LINE
TYP	TYPICAL
VCP	VITRIFIED CLAY PIPE
WTR/W	WATER
WL/W	WATERLINE
YL	YARD LIGHT
XING	CROSSING

EXISTING FEATURES LEGEND

- EXISTING TO BE REMOVED
- ASPHALT REMOVAL
- W — EXISTING WATERLINE
- SS — EXISTING SANITARY SEWER
- STS — EXISTING STORM SEWER
- T — EXISTING TELECOMMUNICATION LINE
- E — EXISTING ELECTRICAL LINE
- S/C — EXISTING STEAM & CONDENSATE LINE
- RAW — EXISTING RADIOACTIVE WASTE LINE
- G — EXISTING GAS LINE
- SD — EXISTING STORM DRAIN MANHOLE
- EXISTING STORM DRAIN INLET
- EXISTING STORM DRAIN PIPE FLARED END SECTION
- 81 — EXISTING 1' CONTOUR
- 7380 — EXISTING 5' CONTOUR
- EXISTING WATER VALVE
- EXISTING FIRE HYDRANT
- S — EXISTING SANITARY SEWER MANHOLE
- EXISTING SANITARY SEWER CLEANOUT
- T — EXISTING TELECOMMUNICATION MANHOLE
- E — EXISTING ELECTRICAL MANHOLE
- 2002 — EXISTING BUILDING FOOTPRINT
- EXISTING TREE

PROPOSED FEATURES LEGEND

- W — PROPOSED WATERLINE
- FP — FIRE PROTECTION LINE
- SS — PROPOSED SANITARY SEWER LINE
- STS — PROPOSED STORM SEWER LINE
- T — PROPOSED TELECOMMUNICATION LINE
- E — PROPOSED ELECTRICAL LINE
- S/C — PROPOSED STEAM AND CONDENSATE LINE
- WATER VALVE
- REDUCER
- PIV
- FIRE HYDRANT
- DROP INLET
- FLARED END SECTION
- RIP RAP
- CMP COLLAR
- STANDARD CURB & GUTTER
- EDGE OF ASPHALT
- FFE = 82.00 — BUILDING FOOTPRINT
- BOLLARDS
- HANDICAPPED PARKING SPACE
- NEW ASPHALT
- NEW CONCRETE
- FLOW ARROW

LANL BUILDING OFFICIAL APPROVED

CHRIS RODRIGUEZ NEW MEXICO 16239 LICENSED PROFESSIONAL ENGINEER 9/22/11

NO	DATE	CLASS REV	DESCRIPTION	DWN	VER	CHKD	SUB	APP

HDR ENGINEERING INC.
2155 LOUISIANA BLVD., NE
SUITE 9500
ALBUQUERQUE, NM 87110
MAIN: (505) 830-5400 FAX:
(505) 830-5454

SERF EXPANSION

LEGEND AND ABBREVIATIONS

DRAWN	B.F.
DESIGN	W.C.
CHECKED	E.D.
DATE	10-14-11

BLDG. TA-

SUBMITTED

APPROVED FOR RELEASE

Los Alamos NATIONAL LABORATORY PO Box 1663 Los Alamos, New Mexico 87545

SHEET C-0002

3 OF 67

CLASSIFICATION UNCLASSIFIED REVIEWER DATE 10/17/11

PROJECT ID 102310 DRAWING NO C-55752 REV 0

ECN-11-TA-03-1398-0000-0265

C:\pwworking\phx\d0224116\102310-C-0002-R0.dwg, Oct 13, 2011 @ 4:00pm

ENV-RCRA-12-0059

ENCLOSURE 1

LAUR-12-10463

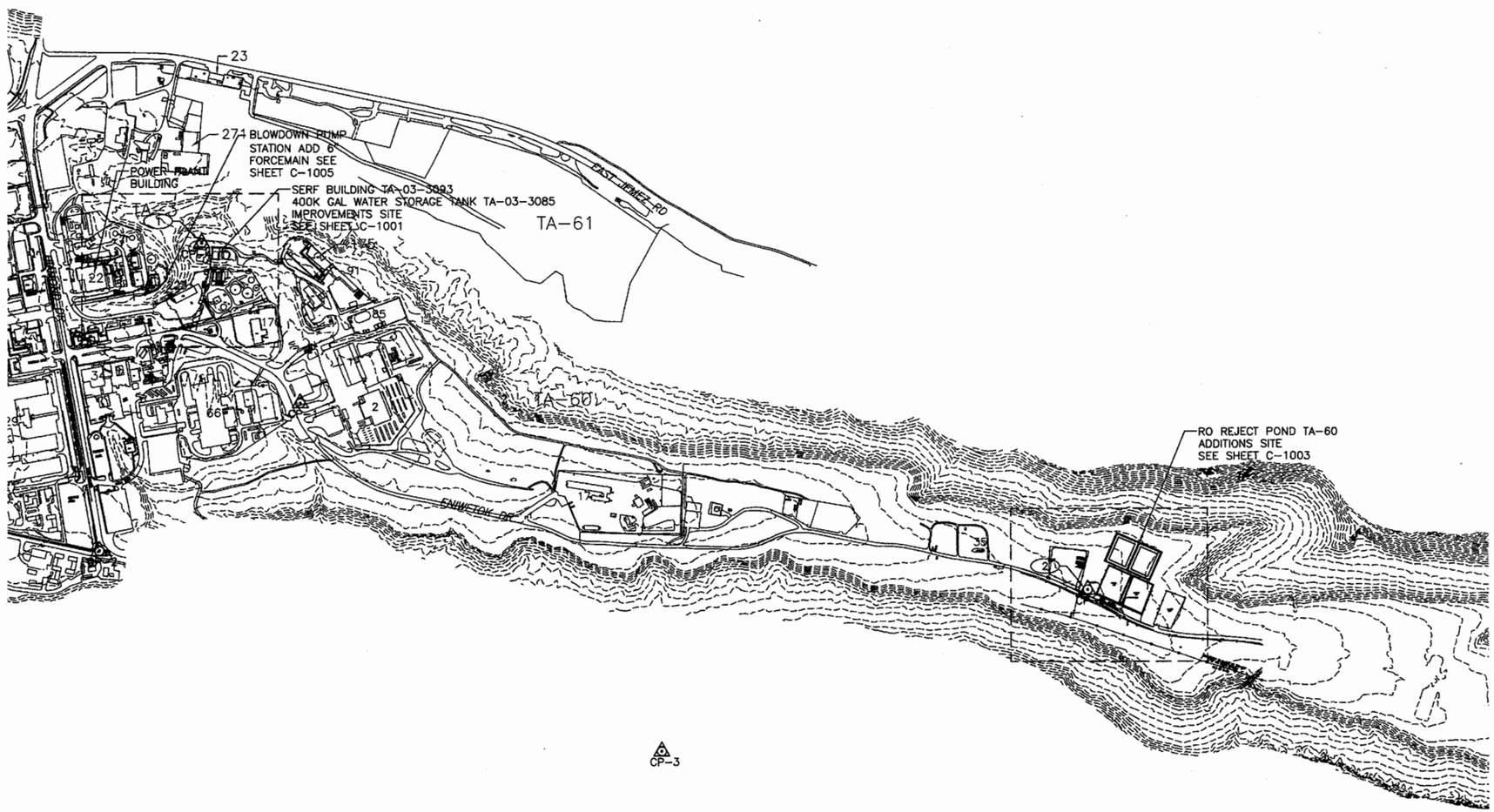

SITE AND SURVEY CONTROL PLAN

0 400' 800'
1"=400'-0"

SURVEY CONTROL POINTS

CP-1 = LANL MONUMENT CALIBRATED A0308
N=1772653.20
E=1620942.17
Z=7368.00

CP-2 = LANL MONUMENT A0306
N=1771637.23
E=1619555.72
Z=7400.98

CP-3 = LANL MONUMENT A4801-CHECK
N=1770252.42
E=1623423.63
Z=7326.61

CP-4 = BENCHMARK SET NO. 4 REBAR
N=1771356.60
E=1626380.43
Z=7276.01

CP-5 = BENCHMARK NO. 4FD
N=1773752.20
E=1620260.89
Z=7308.25

GENERAL NOTES:

1. IF THIS SHEET IS NOT 24"X36" THEN IT IS A REDUCED SIZE PLOT. USE GRAPHIC SCALE ACCORDINGLY.
2. HORIZONTAL CONTROL IS BASED ON NAD83 CENTRAL ZONE NEW MEXICO STATE PLANE COORDINATES. ELEVATION IS BASED ON LANL MONUMENT A0308. ELEVATION MEASURED 7367.82' CALIBRATED FROM EXISTING LANL CONTROL:

   A0308 COORDINATE – N=1772653.1990, E=1620942.1730, CSF=0.99956 GRID
3. SURVEY CONTROL PROVIDED BY:
   SALVADOR I. VIGIL, RLS
   LAND SURVEYING COMPANY, LLC
   PO BOX 4384
   SANTA FE, NM 87502
4. EXISTING TOPOGRAPHY, FACILITIES, AND UTILITIES SHOWN ARE BASED ON MAPPING PROVIDED BY LANL. VERIFY EXISTING CONDITIONS PRIOR TO BEGINNING CONSTRUCTION ACTIVITIES FOR COORDINATION AND FIELD ADJUSTMENTS AS REQUIRED.

KEYED NOTES:

1. ELEVATION DATUM BASED ON LANL MONUMENT A0308 ELEVATION = 7367.82'.
2. ELEVATION DATUM BASED ON BENCHMARK AT THE SOUTHWEST CORNER OF PROPERTY AS DEPICTED. ELEVATION = 7276.01' TOP OF REBAR.

NO	DATE	CLASS REV	DESCRIPTION	DWN	VER	CHKD	SUB	APP

HDR ENGINEERING INC.
2155 LOUISIANA BLVD., NE
SUITE 9500
ALBUQUERQUE, NM 87110
MAIN: (505) 830-5400 FAX: (505) 830-5454

LANL BUILDING OFFICIAL
BA Brant
105567
10-19-11
11-094
APPROVED

REVIEWED FOR LANL STANDARDS
DOE-NNSA/NPO REPORT 341.2 Ch. 10

CHRIS RODRIGUEZ
NEW MEXICO
15239
LICENSED PROFESSIONAL ENGINEER
9/22/11

SERF EXPANSION

OVERALL SITE AND SURVEY PLAN

BLDG. TA-

DRAWN	B.F.
DESIGN	W.C.
CHECKED	E.D.
DATE	10-14-11

SUBMITTED

APPROVED FOR RELEASE

Los Alamos NATIONAL LABORATORY
PO Box 1663
Los Alamos, New Mexico 87545

SHEET C-1000
4 OF 67

CLASSIFICATION UNCLASSIFIED
REL OWNER
DATE 10/17/11

PROJECT ID 102310
DRAWING NO C-55752
REV 0

C:\pwworking\phx\d0224116\102310-C-1000-R0.dwg, Oct 13, 2011 @ 4:02pm

ECN-11-TA-03-1398-0000-0265

ENV-RCRA-12-0059

ENCLOSURE 1

LAUR-12-10463

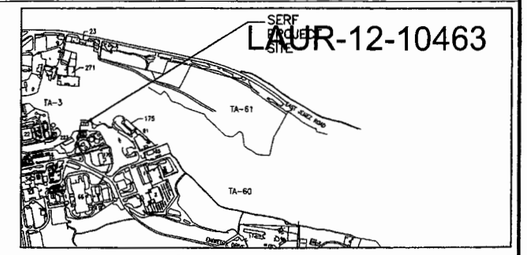

KEY PLAN
SCALE: NONE

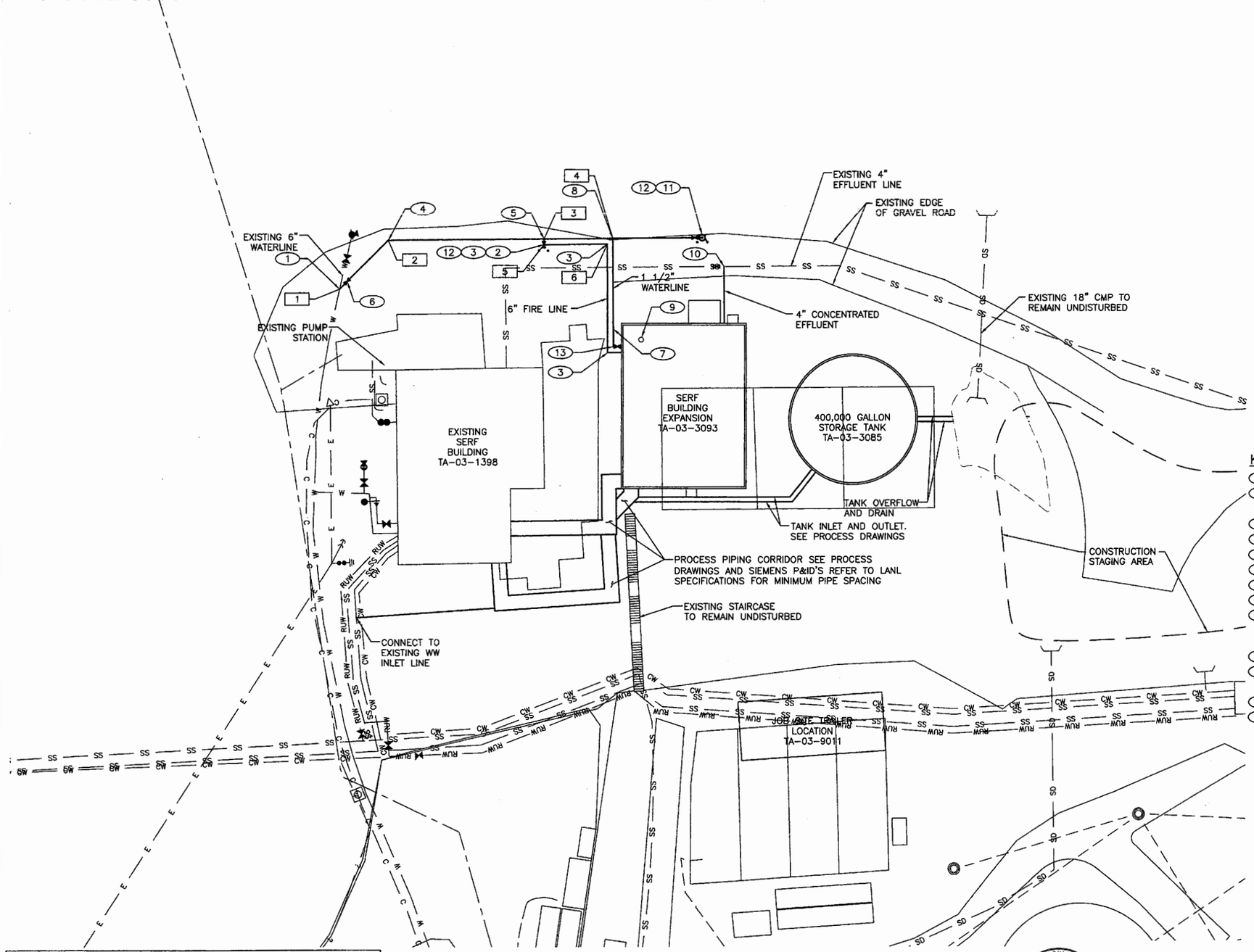

GENERAL NOTES:

1. IF THIS SHEET IS NOT 24"X36", THEN IT IS A REDUCED SIZE PLOT. USE GRAPHIC SCALE ACCORDINGLY.
2. SUBCONTRACTOR TO DEFLECT PIPE JOINTS AS NECESSARY. DO NOT EXCEED MANUFACTURER'S RECOMMENDATIONS FOR PIPE JOINT DEFLECTION.
3. SEE PROCESS SHEETS FOR BUILDING TIE-INS.
4. SUBCONTRACTOR TO UTILIZE BEST MANAGEMENT PRACTICES DETAILED IN THE STORMWATER POLLUTION PREVENTION PLAN (SWPPP) FOR ALL SOIL DISTURBANCE. SEE LANL SPECIFICATION SECTION 01 5705 FOR ADDITIONAL REQUIREMENTS.
5. SUBCONTRACTOR SHALL RESTORE ALL DISTURBED AREAS TO ORIGINAL CONDITIONS AND REVEGETATE APPLICABLE AREAS IN ACCORDANCE WITH LANL SPECIFICATION 32 9219.
6. EXISTING TOPOGRAPHY, FACILITIES, AND UTILITIES SHOWN ARE BASED ON MAPPING PROVIDED BY LANL. VERIFY EXISTING CONDITIONS PRIOR TO BEGINNING CONSTRUCTION ACTIVITIES FOR COORDINATION AND FIELD ADJUSTMENTS AS REQUIRED.

KEYED NOTES:

1. CUT IN 6"x6"x6" TEE W/ VALVE TO EAST AND 45° BEND
2. 6" PVC WATERLINE FOR FIRE SUPRESSION SYSTEM. INSTALL POST INDICATOR VALVE. SEE DETAIL 6/C-5000.
3. 6" 90° WATERLINE BEND.
4. 6" 45° WATERLINE BEND.
5. 6"X6"X6" TEE.
6. 6" GATEVALVE WITH VALVE BOX. SEE DETAIL 3/C-5000.
7. 1 1/2" COPPER WATERLINE.
8. 1 1/2" TAP FOR WATER SERVICE. SEE DETAIL 4/C-5000.
9. RELOCATE EXISTING CLEANOUT TO LOCATION OUTSIDE OF BUILDING CONSTRUCTION AREA TO THE WEST OR AS DIRECTRED BY LANL OPERATIONS STAFF.
10. TIE IN TO EXSITNG 4" SS CONCENTRATE LINE WITH ISOLATION VALVE TO
11. WEST. SEE DETAIL 4/C-5000.
    FIRE HYDRANT W/ GATEVALVE AND BOX. SEE DETAIL 3/C-5000.
12. BOLLARDS. SEE DETAIL 5/C-5001
13. 1 1/2" WATERLINE BEND.

POINT TABLE – SITE AND PIPING LAYOUT

POINT	NORTHING	EASTING
1	1773745.13	1620209.72
2	1773763.72	1620231.02
3	1773759.77	1620294.72
4	1773758.00	1620323.25
5	1773757.46	1620294.58
6	1773755.80	1620320.84

SITE AND PIPING PLAN

20' 10' 0 10' 20'
1"=20'-0"

LANL BUILDING OFFICIAL
RA Trout
1055667
10-19-11
11-094
APPROVED

CHRIS RODRIGUEZ
NEW MEXICO
16239
LICENSED PROFESSIONAL ENGINEER
9/23/11

NO	DATE	CLASS REV	DESCRIPTION	DWN	VER	CHKD	SUB	APP

HDR ENGINEERING INC.
2155 LOUISIANA BLVD., NE
SUITE 5500
ALBUQUERQUE, NM 87110
MAIN: (505) 830-5400 FAX: (505) 830-5454

SERF EXPANSION

SERF SITE AND PIPING PLAN

BLDG. 3093/3085 TA-03

DRAWN	B.F.	
DESIGN	W.C.	
CHECKED	E.D.	
DATE	10-14-11	

SUBMITTED
APPROVED FOR RELEASE

Los Alamos NATIONAL LABORATORY
PO Box 1663
Los Alamos, New Mexico 87545

SHEET C-1001
5 OF 67

CLASSIFICATION UNCLASSIFIED
REVIEWER
DATE 10/17/11

PROJECT ID 102310
DRAWING NO C-55752
REV 0

ECN-11-TA-03-1398-0000-0265

C:\pwworking\phx\d0224116\102310-C-1001-R0.dwg, Oct 13, 2011 @ 4:02pm

ENV-RCRA-12-0059

ENCLOSURE 1

LANL-IR-12-10463

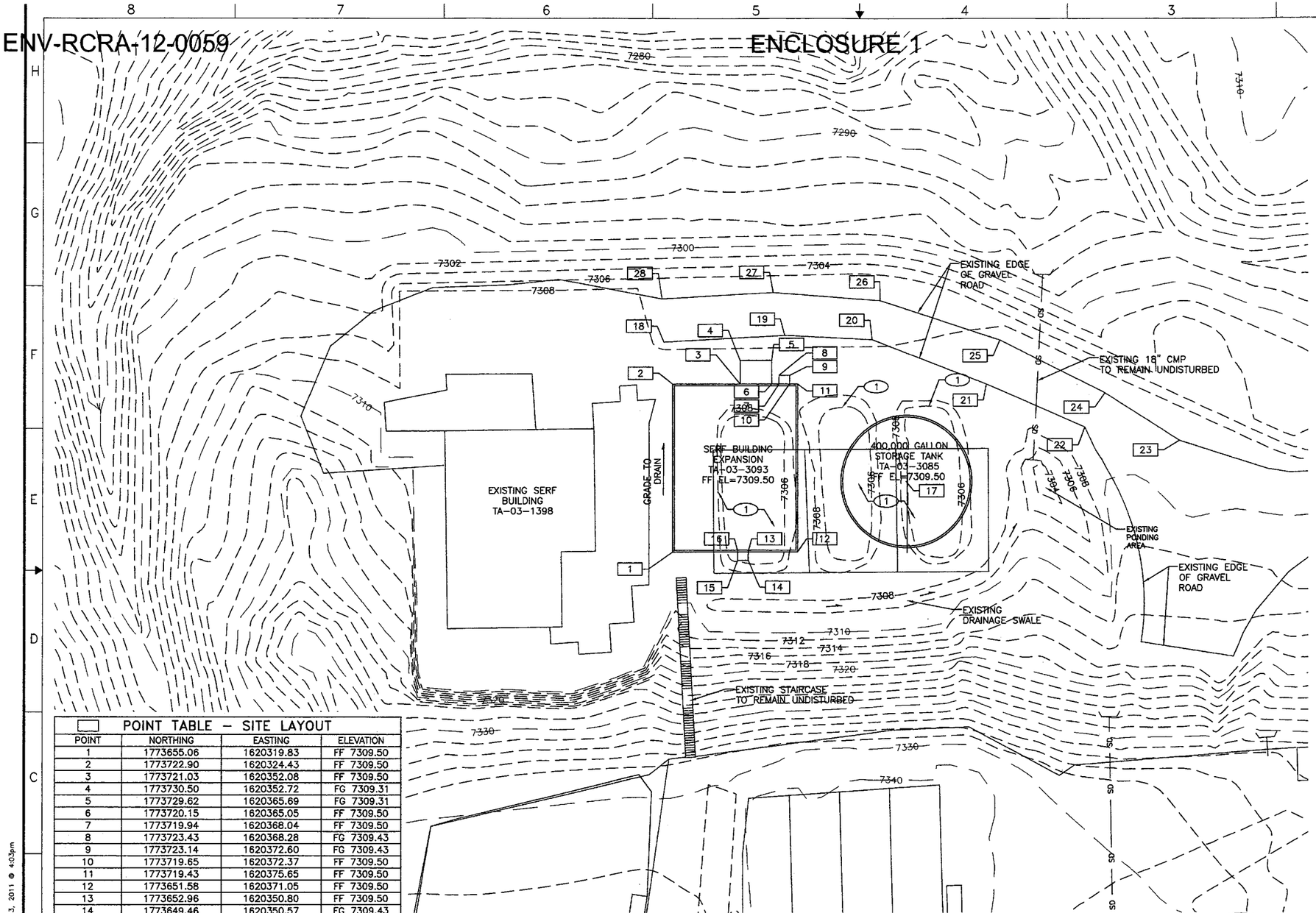

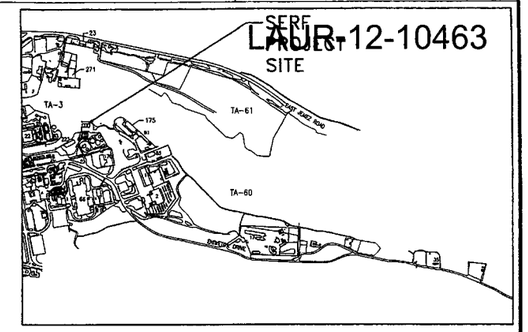

KEY PLAN
SCALE: NONE

GENERAL NOTES:

1. IF THIS SHEET IS NOT 24"X36", THEN IT IS A REDUCED SIZE PLOT. USE GRAPHIC SCALE ACCORDINGLY.
2. ALL EARTWHORK ACTIVITES SHALL BE CONDUCTED IN ACCORDANCE WITH LANL SPECIFICATION 31 2000.
3. SUBCONTRACTOR TO UTILIZE BEST MANAGEMENT PRACTICES DETAILED IN THE STORMWATER POLLUTION PREVENTION PLAN (SWPPP). SEE LANL SPECIFICATION SECTION 01 5705 FOR ADDITIONAL REQUIREMENTS.
4. SUBCONTRACTOR SHALL REVEGETATE ALL DISTURBED AREAS IN ACCORDANCE WITH LANL SPECIFICATION 32 9219.
5. EXISTING TOPOGRAPHY, FACILITIES, AND UTILITIES SHOWN ARE BASED ON MAPPING PROVIDED BY LANL. VERIFY EXISTING CONDITIONS PRIOR TO BEGINNING CONSTRUCTION ACTIVITIES FOR COORDINATION AND FIELD ADJUSTMENTS AS REQUIRED.

KEYED NOTES:

1. FILL AND GRADE EXISTING ABANDONED SLUDGE DRYING BEDS. ALL DISTURBED SOILS FROM DRYING BEDS TO REMAIN ON-SITE.

POINT TABLE – SITE LAYOUT

POINT	NORTHING	EASTING	ELEVATION
1	1773655.06	1620319.83	FF 7309.50
2	1773722.90	1620324.43	FF 7309.50
3	1773721.03	1620352.08	FF 7309.50
4	1773730.50	1620352.72	FG 7309.31
5	1773729.62	1620365.69	FG 7309.31
6	1773720.15	1620365.05	FF 7309.50
7	1773719.94	1620368.04	FF 7309.50
8	1773723.43	1620368.28	FG 7309.43
9	1773723.14	1620372.60	FG 7309.43
10	1773719.65	1620372.37	FF 7309.50
11	1773719.43	1620375.65	FF 7309.50
12	1773651.58	1620371.05	FF 7309.50
13	1773652.96	1620350.80	FF 7309.50
14	1773649.46	1620350.57	FG 7309.43
15	1773649.76	1620346.24	FG 7309.43
16	1773653.25	1620346.48	FF 7309.50
17	1773676.96	1620417.37	FF 7309.50

ALL ELEVATIONS SHOWN ARE FINISH GRADE UNLESS OTHERWISE NOTED.

POINT TABLE – EXISTING EDGE OF ROAD

POINT	NORTHING	EASTING	ELEVATION
18	1773740.05	1620322.04	EG 7307.92
19	1773739.36	1620371.64	EG 7307.59
20	1773735.19	1620407.21	EG 7307.87
21	1773714.12	1620452.71	EG 7308.65
22	1773694.10	1620491.18	EG 7309.06
23	1773686.03	1620529.24	EG 7309.40
24	1773707.30	1620500.36	EG 7308.76
25	1773731.45	1620459.36	EG 7308.20
26	1773750.57	1620411.59	EG 7307.47
27	1773756.89	1620368.22	EG 7307.38
28	1773757.48	1620322.40	EG 7307.92

GRADING PLAN

20' 10' 0 10' 20'
1"=20'-0"

LANL BUILDING OFFICIAL
SO RA Trout
EP 105567
DATE 10-19-11
LANL 11-094
APPROVED

REVIEWED FOR LANL STANDARDS COMPLIANCE PER ISD 341-2 CH 10

CHRIS RODRIGUEZ
NEW MEXICO
16238
LICENSED PROFESSIONAL ENGINEER
9/22/11

NO	DATE	CLASS REV	DESCRIPTION	DWN	VER	CHKD	SUB	APP

HDR ENGINEERING INC.
2155 LOUISIANA BLVD., NE
SUITE 9500
ALBUQUERQUE, NM 87110
MAIN: (505) 830-5400 FAX: (505) 830-5454

SERF EXPANSION

SERF GRADING PLAN

BLDG. 3093/3085 TA-03

DRAWN	B.F.
DESIGN	W.C.
CHECKED	E.D.
DATE	10-14-11

SUBMITTED
APPROVED FOR RELEASE

Los Alamos NATIONAL LABORATORY
PO Box 1663
Los Alamos, New Mexico 87545

SHEET C-1002
6 OF 67

CLASSIFICATION UNCLASSIFIED
REVIEWER
DATE 10/17/11

PROJECT ID 102310
DRAWING NO. C-55752
REV 0

ECN-11-TA-03-1398-0000-0265

C:\pwworking\phx\d0224116\102310-C-1002-R0.dwg, Oct 13, 2011 @ 4:03pm

ENCLOSURE 1

GENERAL CONSTRUCTION NOTES

1. ALL CONSTRUCTION SHALL CONFORM TO THE REQUIREMENTS OF THE 2006 INTERNATIONAL BUILDING CODE (IBC) ASCE7 AND ALL ASSOCIATED CODES.
2. STRUCTURAL DRAWINGS SHALL BE USED IN CONJUNCTION WITH THE ARCHITECTURAL, MECHANICAL, ELECTRICAL, AND PLUMBING DRAWINGS FOR LOCATION AND SIZE OF OPENINGS, BLOCKOUTS, FLOOR DEPRESSIONS, CURBS, DIMENSIONS, ETC., NOT SHOWN ON THE STRUCTURAL DRAWINGS. THE LOCATION AND SIZE OF MECHANICAL AND ELECTRICAL OPENINGS IN SLABS, WALLS, AND DECKS SHALL BE COORDINATED BY THE SUBCONTRACTOR. PROVIDE ALL ADDITIONAL FRAMING OR REINFORCING TO ACCOMMODATE OPENINGS AS REQUIRED BY THE APPLICABLE STANDARD DETAILS SHOWN OR NOTED ON THE STRUCTURAL DRAWINGS.
3. DRAWINGS SHALL NOT BE SCALED.
4. SUBCONTRACTOR SHALL VISIT SITE AND FAMILIARIZE HIMSELF WITH EXISTING CONDITIONS, CHECK AND VERIFY EXISTING DIMENSIONS AND TAKE ADDITIONAL MEASUREMENTS AS NEEDED. NOTIFY ENGINEER OF ANY DISCREPANCY BETWEEN ACTUAL DIMENSIONS AND DIMENSIONS ASSUMED IN DESIGN.
5. IT IS THE SUBCONTRACTOR'S RESPONSIBILITY TO PLACE OR STORE CONSTRUCTION MATERIALS ON THE STRUCTURE IN A MANNER THAT DOES NOT EXCEED THE ALLOWABLE LIVE LOAD. PROVIDE COMPLETE AND ADEQUATE SHORING, BRACING, OR ADDITIONAL FRAMING WHEN OVERLOAD IS ANTICIPATED.
6. TYPICAL SECTIONS AND DETAILS ON SHEET S-5000 TO S-5001 SHALL BE USED WHENEVER THE APPLICABLE SITUATION OCCURS UNLESS NOTED OTHERWISE. (1)
7. WHERE DIMENSIONS ARE PROVIDED FOR OPENINGS, BLOCKOUTS, FLOOR DEPRESSIONS, ETC., BUT MAY BE EFFECTED BY THE EQUIPMENT PURCHASED, THE SUBCONTRACTOR SHALL VERIFY THE INFORMATION PRIOR TO FABRICATION AND CONSTRUCTION.
8. DO NOT BACKFILL AROUND STRUCTURES UNTIL CONCRETE HAS GAINED 100% OF ITS DESIGN STRENGTH.
9. ALL DIMENSIONS REFERRING TO EXISTING STRUCTURES SHALL BE FIELD VERIFIED PRIOR TO FABRICATION AND CONSTRUCTION.
10. ALL JOINTS IN STRUCTURE THAT IS DESIGNED TO CONTAIN LIQUID SHALL HAVE WATERSTOPS, NO EXCEPTIONS.
11. SAFETY AND STRUCTURAL STABILITY DURING CONSTRUCTION ARE THE SOLE RESPONSIBILITY OF THE SUBCONTRACTOR. STRUCTURES HAVE BEEN DESIGNED TO RESIST THE DESIGN LOADS ONLY AS A COMPLETE STRUCTURE.

STRUCTURAL STEEL

1. ALL FIELD-BOLTED SHEAR CONNECTIONS SHALL BE MADE WITH 7/8" DIAMETER A325-N BOLTS, UNLESS NOTED OTHERWISE.
2. PLACE NON-SHRINK GROUT UNDER ALL COLUMN BASE PLATES BEFORE ADDING ANY VERTICAL LOADS.
3. WHEN THE FILLET WELD SIZE IS NOT INDICATED ON A WELD SYMBOL, PROVIDE SIZE ACCORDING TO THE MINIMUM FILLET WELD SCHEDULE, PER AISC.
4. FIELD WELDS INDICATED ON THE DRAWINGS ARE NOT INTENDED TO LIMIT THE WELD FROM BEING MADE IN THE SHOP.
5. ALL WELDING SHALL BE PERFORMED BY PROPERLY QUALIFIED WELDERS, AS PRESCRIBED UNDER "STANDARD QUALIFICATION PROCEDURE" OF THE AMERICAN WELDING SOCIETY.
6. THE STRUCTURAL DRAWINGS SHALL BE USED IN CONJUNCTION WITH THE SPECIFICATIONS AND THE ARCHITECTURAL, MECHANICAL, AND ELECTRICAL DRAWINGS. THE SUBCONTRACTOR SHALL VERIFY THE REQUIREMENTS OF OTHER TRADES AS TO SLEEVES, CHASES, HANGERS, INSERTS, ANCHORS, HOLES, ETC. TO BE PLACED OR SET IN THE STRUCTURAL WORK.
7. WHERE THE WORK OF OTHER TRADES REQUIRES CUTS OR HOLES TO BE MADE IN STRUCTURAL STEEL MEMBERS, APPROVAL SHALL BE OBTAINED FROM THE ENGINEER. SUCH OPENINGS SHALL BE MADE IN THE SHOP AND CLEARLY INDICATED ON THE SHOP DRAWINGS.
8. THE SUBCONTRACTOR SHALL PROVIDE ALL TEMPORARY GUYING AND BRACING REQUIRED TO ERECT AND HOLD THE STEEL FRAME IN PROPER ALIGNMENT UNTIL ALL FLOOR AND ROOF DECK, DIAGONAL BRACING, FLOOR SLABS, WELDED CONNECTIONS, ETC. ARE IN PLACE AND THE CONCRETE HAS DEVELOPED A STRENGTH OF MINIMUM 3000 PSI MIN.
9. ELEVATIONS: TOP OF STEEL (TOS) REFERS TO TOP OF SURFACE OF MEMBER OR FLANGE, UNO.
10. MEMBERS AND CONNECTIONS INDICATED AS SLRS ARE PART OF THE SEISMIC FORCE RESISTING SYSTEM (SLRS). ALL BOLTS FOR THE SLRS SHALL BE PRETENSIONED A325-N WITH LOAD INDICATING WASHERS OR TWIST-OFF TYPE BOLTS. SEE SPECIFICATIONS FOR SPECIAL REQUIREMENTS. ALL SURFACES SHALL BE CLASS A FAYING SURFACES PER AISC 360-05 SPECIFICATION FOR STRUCTURAL JOINTS, SECTION 3. (1)

FOUNDATION DESIGN

1. THE FOUNDATION DESIGN IS BASED UPON THE RECOMMENDATIONS PRESENTED IN THE GEOTECHNICAL INVESTIGATION REPORT PREPARED BY:
AMEC EARTH & ENVIRONMENTAL, INC.
8519 JEFFERSON, NE
ALBUQUERQUE, NM 87113
TELEPHONE NO. (505)821-1801
PROJECT NO. 11-517-00054
2. FOOTINGS ARE DESIGNED TO BEAR UPON NATIVE UNDISTURBED SOIL OR ENGINEERED FILL WITH AN ALLOWABLE BEARING CAPACITY OF 4,000 PSF. BUILDING SOIL SUBGRADE MODULUS - 200 PCI WITHOUT GRANULAR SUBBASE OR 300 PCI WITH 6" COMPACTED GRANULAR SUBBASE.
3. ALL STRUCTURES TO BE PLACED ON ENGINEERED FILL, DOWN TO COMPITENT TUFF FORMATION.

DESIGN CODE

1. 2006 INTERNATIONAL BUILDING CODE (IBC), ASCE7-05 AND ALL ASSOCIATED CODES.
2. ANSI/AISC341-05 SEISMIC PROVISIONS FOR STRUCTURAL STEEL BUILDINGS.

CONCRETE

1. ALL REINFORCEMENT SHALL BE DETAILED, FABRICATED, AND PLACED IN ACCORDANCE WITH ACI 315.
2. SEE ARCHITECTURAL, MECHANICAL, AND ELECTRICAL DRAWINGS FOR LOCATION OF OPENINGS AND SLEEVES. SPREAD REINFORCEMENT AT OPENINGS AND SLEEVES UNLESS NOTED OTHERWISE. DO NOT CUT REINFORCEMENT UNLESS INDICATED BY SECTION OR DETAIL. SUBCONTRACTOR SHALL VERIFY THE SIZE AND LOCATION OF ALL OPENINGS, SLEEVES, INSERTS, ETC. WITH SHOP DRAWINGS FOR THE EQUIPMENT TO BE PROVIDED.
3. CONTINUOUS REINFORCEMENT IN WALLS AND FOOTINGS MAY BE SPLICED AS REQUIRED, PROVIDED THAT BARS ARE OF THE LONGEST PRACTICAL LENGTH AND ALL SPLICES ARE SHOWN ON THE REINFORCING BAR SHOP DRAWINGS. SPLICES ARE TO BE STAGGERED AND OF REQUIRED LENGTH.
4. THE SUBCONTRACTOR SHALL BE RESPONSIBLE FOR ADEQUATE DESIGN AND CONSTRUCTION OF ALL FORMS, SHORING, AND TEMPORARY BRACING.
5. ABSOLUTELY NO WELDING OF REINFORCING BARS OR TORCHING TO BEND REINFORCING BARS SHALL BE ALLOWED WITHOUT SPECIFIC APPROVAL FROM THE STRUCTURAL ENGINEER.
6. SUBCONTRACTOR SHALL SUBMIT A CONCRETE PLACEMENT PLAN IDENTIFYING JOINT TYPES, JOINT LOCATIONS AND CONCRETE PLACEMENT SEQUENCE.

DEFORMED BAR & HEADED STUD ANCHORS

1. HEADED STUDS AND DEFORMED BAR ANCHORS SHALL BE ELECTRIC-ARC STUD WELDED TO THE SUPPORT PER MANUFACTURER'S RECOMMENDATIONS. FILLET WELDING OF DEFORMED BARS AND HEADED STUDS IS NOT ALLOWED.
2. ANCHORS SHALL COMPLY WITH ASTM A-108 AND A-496 WITH A MINIMUM YIELD STRENGTH OF 70 KSI. DEFORMED BARS TO COMPLY WITH ASTM A-706 WITH MINIMUM YIELD STRENGTH OF 60 KSI.

POST INSTALLED ANCHORS

1. ANCHORS NOT SPECIFIED BY THE ENGINEER SHALL BE DESIGNED BY SUBCONTRACTOR IN ACCORDANCE WITH THE APPLICABLE PROJECT CODE REQUIREMENTS. COORDINATE SIZE, LOCATION AND EMBEDMENT PRIOR TO INSTALLATION.
2. LOCATE AND MARK LOCATION OF REINFORCEMENT PRIOR TO DRILLING. DO NOT DRILL INTO EXISTING REINFORCEMENT.
3. ALL ANCHORS SHALL HAVE THE ICC REPORT SHOWING ANCHOR LOAD CAPACITY. SUBMIT CALCULATIONS SHOWING LOAD CAPACITY IN ACCORDANCE WITH ACI APPENDIX D AND THE ICC REPORT AND INSTALL PER THE ICC EVALUATION REPORT.

COLD FORMED STEEL FRAMING

1. LIGHT GAUGE FRAMING MEMBERS SHALL BE DESIGNED BY A LICENSED PROFESSIONAL ENGINEER REGISTERED IN THE STATE OF NEW MEXICO, SEE SPECIFICATIONS.
2. LIGHT GAUGE MEMBERS LESS THAN 54 MILS SHALL BE 33 KSI STEEL AND LIGHT GAUGE MEMBERS EQUAL TO OR GREATER THAN 54 MILS SHALL BE 55 KSI STEEL, UNO.
3. UNLESS NOTED OTHERWISE, MEMBER CONNECTIONS SHALL BE WITH (2) #12 TEK SCREWS, MINIMUM.

MATERIALS OF CONSTRUCTION

1. NORMAL WEIGHT CONCRETE	28 DAY COMPRESSIVE STRENGTH		
a. ALL CONCRETE UNO	Fc = 4,000 PSI		
2. STRUCTURAL STEEL			
STRUCTURAL W SHAPES AND WT SHAPES	- ASTM A992	FY = 50 KSI	
PLATES AND OTHER SHAPES	- ASTM A36 (UNO)	FY = 36 KSI	
HOLLOW STRUCTURAL SECTION (HSS)	- ASTM A500 GRADE B	FY = 46 KSI	
PIPES	- ASTM A53 GRADE B	FY = 35 KSI	
HIGH STRENGTH BOLTS	- A325-N		
ANCHOR BOLTS	- ASTM F1554 GRADE 36 UNO (GALVANIZED)		
THREADED RODS	- ASTM A36		
3. REINFORCING STEEL			
REINFORCING STEEL	- ASTM A615 GR60	FY = 60 KSI	
REINFORCING STEEL TO BE WELDED	- ASTM A706 GR60	FY = 60 KSI	

QUALITY ASSURANCE

1. THE OWNER SHALL EMPLOY QUALIFIED SPECIAL INSPECTORS TO PERFORM INSPECTIONS IN ACCORDANCE WITH SECTION 109 AND CHAPTER 17 OF THE 2006 IBC.
2. SECTION 01-4000 OF THE PROJECT SPECIFICATIONS.

DESIGN LOADS

1. DESIGN DEAD LOAD:

ACTUAL WEIGHT OF MATERIALS USED ROOF	
A. COLLATERAL	- 10 PSF

2. DESIGN LIVE LOADS:

ROOF	- 30 PSF (NONE REDUCIBLE) OR 2,000 LB CONC. LOAD
STAIRS & EXIT WAYS	- 100 PSF + 300 LBS CONC. LOAD
SLAB ON GRADE	- 250 PSF + 3000 LB CONC. LOAD
TRUCK LOAD - AASHTO	- HS 20

3. WIND LOAD:

BASIC WIND VELOCITY	= 90 MPH (3 SECOND GUST)
IMPORTANCE FACTOR	= 1.15
EXPOSURE FACTOR	= C
OCCUPANCY CATEGORY	= II
TOPOGRAPHIC FACTOR, K_{zt}	= 1.60

4. SNOW LOAD:

GROUND SNOW LOAD, P_g	= 30 PSF
EXPOSURE FACTOR	= C
IMPORTANCE FACTOR, I_s	= 1.2

5. SEISMIC LOAD:

S_{DS}	= 0.75g
S_{DI}	= 0.64g
SITE CLASSIFICATION	= D
OCCUPANCY CATEGORY	= II
SEISMIC DESIGN CATEGORY	= D
IMPORTANCE FACTOR, I_e	= 1.0
ANALYSIS PROCEDURE	EQUIVALENT LATERAL FORCE
SYSTEM	INTERMEDIATE MOMENT FRAMES (EAST/WEST DIRECTION) ORDINARY CONCENTRICALLY BRACED FRAME (NORTH/SOUTH DIRECTION)

LANL BUILDING OFFICIAL — 105567 — 10-19-11 — 11-094 — APPROVED

ZEEV H. SAGGI — NEW MEXICO — 12250 — REGISTERED PROFESSIONAL ENGINEER — 9-22-11

NO	DATE	CLASS REV	DESCRIPTION	DWN	VER	CHKD	SUB	APP
1	10/4/11	-	LANL REVIEW COORDINATION UPDATE	BF	CZ	ZS	-	-

HDR ENGINEERING INC. 2155 LOUISIANA BLVD., NE SUITE 9500 ALBUQUERQUE, NM 87110 MAIN: (505) 830-5400 FAX: (505) 830-5454

SERF EXPANSION

STRUCTURAL GENERAL NOTES

BLDG. 3093 TA-03

DRAWN	H.G.
DESIGN	C.Z.
CHECKED	Z.S.
DATE	10-14-11

SUBMITTED — APPROVED FOR RELEASE

Los Alamos NATIONAL LABORATORY PO Box 1663 Los Alamos, New Mexico 87545

SHEET S-0001 — 14 OF 67

CLASSIFICATION UNCLASSIFIED — REVIEWER — DATE 10/17/11

PROJECT ID 102310 — DRAWING NO C-55752 — REV 1

ECN-11-TA-03-1398-0000-0265

C:\pwworking\phx\d0239251\102310-S-0001-R1.dwg, Oct 13, 2011 @ 4:05pm

ENV-RCRA-12-0059

ENCLOSURE-1

LAUR-12-10463

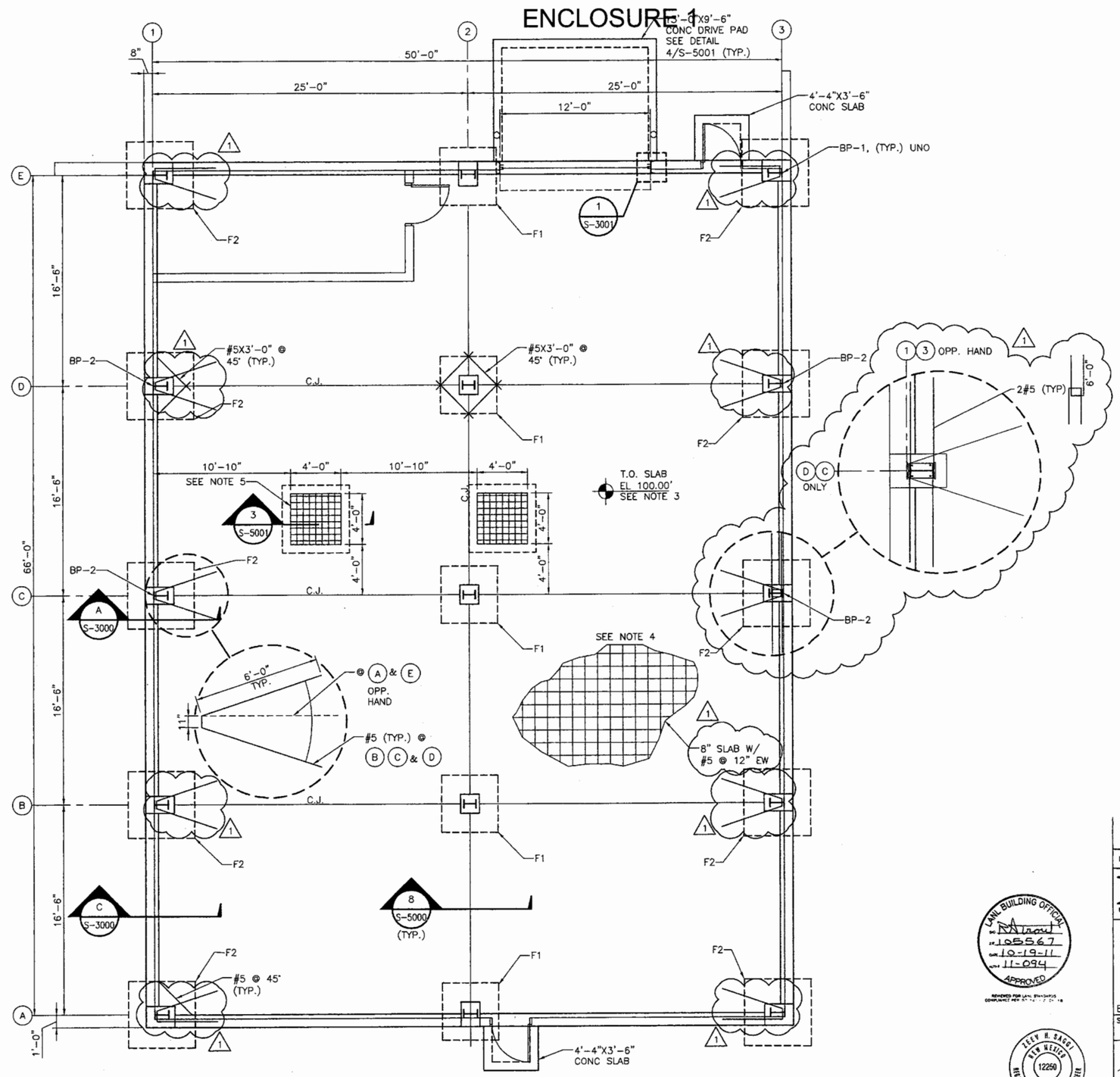

STRUCTURAL FOUNDATION PLAN

0' 1' 2' 4' 6' 8'
1/4"=1'-0"

GENERAL NOTES:

1. IF THIS SHEET IS NOT 24"X36", THEN IT IS A REDUCED SIZE PLOT. USE GRAPHIC SCALE ACCORDINGLY.
2. SLAB AND FOUNDATION TO BE PLACED ON 3' OF STRUCTURAL FILL. SEE DETAIL 1/S-5001.
3. TOP OF SLAB ELEVATION 100.00. FOR ACTUAL ELEVATION SEE SHEET C-1002.
4. THE SLAB IS A STRUCTURAL DIAPHRAGM AND PART OF THE LATERAL-FORCE-RESISTING SYSTEM.
5. FOR ADDITIONAL REINFORCEMENT AROUND SUMP PIT SEE DETAIL 4/S-5000.
6. PLACE SLAB OVER 4" COMPACTED GRANULAR SUBBASE
7. ALL HAIRPIN BARS TO BE WRAPPED AROUND ANCHORS. 1

NO	DATE	CLASS REV	DESCRIPTION	DWN	VER	CHKD	SUB	APP
1	10/4/11	-	LANL REVIEW COORDINATION UPDATE	BF	ZS	-	-	-

HDR ENGINEERING INC.
2155 LOUISIANA BLVD., NE
SUITE 9500
ALBUQUERQUE, NM 87110
MAIN: (505) 830-5400 FAX: (505) 830-5454

SERF EXPANSION

SERF BUILDING STRUCTURAL FOUNDATION PLAN

BLDG. 3093 TA-03

DRAWN H.G.
DESIGN C.Z.
CHECKED Z.S.
DATE 10-14-11

SUBMITTED
APPROVED FOR RELEASE

Los Alamos NATIONAL LABORATORY PO Box 1663 Los Alamos, New Mexico 87545

SHEET S-1000
15 OF 67

CLASSIFICATION UNCLASSIFIED
REVIEWER
DATE 10/11/11

PROJECT ID 102310
DRAWING NO. C-55752
REV 1

LANL BUILDING OFFICIAL APPROVED 105567 10-19-11 11-094

ZACH H. SAGAI NEW MEXICO 12250 REGISTERED PROFESSIONAL ENGINEER 9-22-11

ECN-11-TA-03-1398-0000-0265

C:\pwworking\phx\d0239251\102310-S-1000-R1.dwg, Oct 13, 2011 @ 4:06pm

ENV-RCRA-12-0059

ENCLOSURE 1

LAUR-12-10463

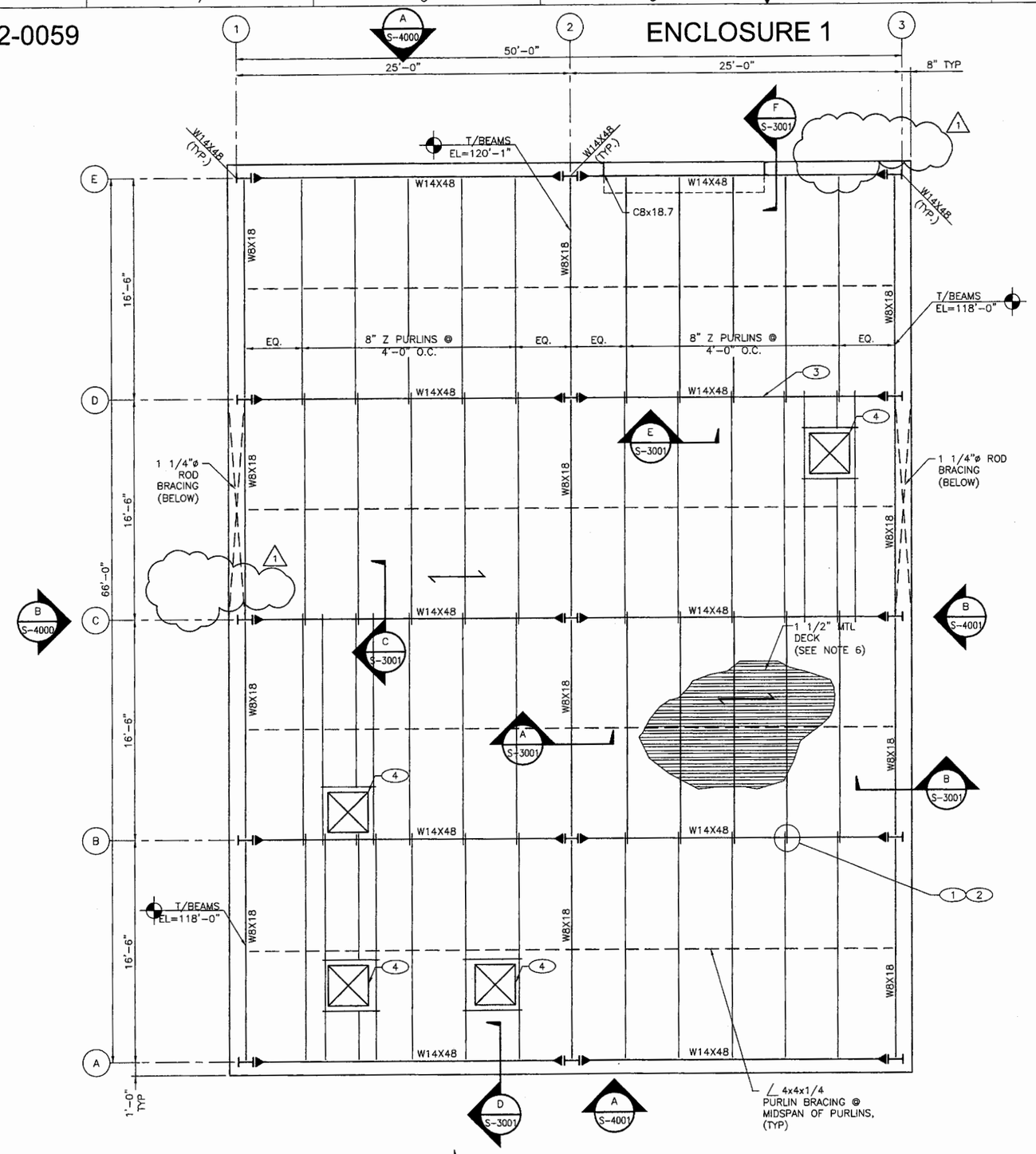

STRUCTURAL ROOF FRAMING PLAN

1/4"=1'-0"

GENERAL NOTES:

1. IF THIS SHEET IS NOT 24"X36", THEN IT IS A REDUCED SIZE PLOT. USE GRAPHIC SCALE ACCORDINGLY.
2. SEE ARCHITECTURAL DRAWINGS FOR ADDITIONAL RIDGE, VALLEY, AND ROOF SLOPE DETAILS.
3. ELEVATIONS INDICATED AS (+-) SHALL BE FROM A FINISH FLOOR DATUM ELEVATION OF 100.00. THE DATUM ELEVATION OF 100.00 SHALL CORRESPOND TO ACTUAL ELEVATION 7309.50.
4. ALL SECONDARY STRUCTURAL FRAMING AND BUILDING SKIN IS BEING PROVIDED BY A BUILDING SUPPLIER IN ACCORDANCE WITH SPECIFICATION SECTION 13 3419. ALL SUPPORTING INFORMATION INCLUDING CALCULATIONS WILL BE PROVIDED BY THE BUILDING SUPPLIER AS A PART OF CONSTRUCTION SHOP DRAWING SUBMITTAL. ALL PREFABRICATED SECONDARY FRAMING SHALL BE DESIGNED BY A LICENSED PROFESSIONAL ENGINEER REGISTERED IN NEW MEXICO, SEE SPECIFICATIONS, SECTION 13 3419.
5. MINIMUM SECTION PROPERTIES
6. STEEL ROOF DECK IS 1-1/2 INCH X 20 GAUGE TYPE , DESIGNED FOR THE LOADS INDICATED ON THE GENERAL STRUCTURAL NOTES. MINIMUM ROOF DECK SECTION PROPERTIES:

Ip=	0.201 in4
Sp=	0.234 in3
In=	0.222 in4
Sn=	0.247 in3
DESIGN THICKNESS=	0.0358 in

1 ROOF DECK CONNECTIONS: 36/4 PATTERN, #12 TEK SCREWS AT ALL SUPPORTS WITH #10 TEK SCREWS SIDELAP FASTENERS AT 12" O.C. METAL DECK TO CONFORM TO ASTM A 653. FOR ADDITIONAL INFORMATION SEE SECTION 13 3419.

7. ALL 8 INCH Z-PURLINS SHALL HAVE MINIMUM 2 1/2" FLANGE AND THE MINIMUM SECTION PROPERTIES:

Fy=	55 KSI
AREA=	1.27 in2
Ix=	12.4 in4
Sx=	3.11 in3
Iy=	2.51 in4
DESIGN THICKNESS=	0.085 in

= INDICATES DECK SPAN DIRECTION

▶ = INDICATES MOMENT CONNECTION

KEYED NOTES:

1. Z PURLINS TO HAVE 2'-6" OVERLAP. SEE SECTION C/S-3001.
2. FOR ALL SECONDARY STRUCTURAL MEMBERS REQUIREMENTS SEE SECTION 13-3419.
3. PROVIDE 8" 16GA C-SHAPE PURLIN BLOCKING BETWEEN ALL PURLINS AT BEAM SUPPORTS.
4. ROOF HATCHES, SEE ARCHITECTURAL. DETAILS FOR ROOF HATCH TO BE PROVIDED BY BUILDING MATERIAL SUPPLIER AS A CONSTRUCTION SUBMITTAL. SECONDARY FRAMING DESIGNER TO DESIGN FRAME AROUND OPENING, AND ADJUST PURLINS AS REQURED.

NO	DATE	CLASS REV	DESCRIPTION	DWN	VER	CHKD	SUB	APP
1	10/4/11	-	LANL REVIEW COORDINATION UPDATE	BF	ZS	-	-	-

HDR ENGINEERING INC.
2155 LOUISIANA BLVD., NE
SUITE 9500
ALBUQUERQUE, NM 87110
MAIN: (505) 830-5400 FAX: (505) 830-5454

LANL BUILDING OFFICIAL
SC RA Trout
IP 105567
DATE 10-19-11
LOC 11-094
APPROVED
REVIEWED FOR LANL STANDARDS COMPLIANCE PER SP 341-3-2-18

JEFF R. SAGER NEW MEXICO 12250 REGISTERED PROFESSIONAL ENGINEER
9-22-11

SERF EXPANSION

SERF BUILDING STRUCTURAL FRAMING PLAN

BLDG. 3093 TA-03

DRAWN	H.G.
DESIGN	C.Z.
CHECKED	Z.S.
DATE	10-14-11

SUBMITTED

APPROVED FOR RELEASE

Los Alamos NATIONAL LABORATORY
PO Box 1663
Los Alamos, New Mexico 87545

SHEET S-1001

16 OF 67

CLASSIFICATION UNCLASSIFIED

REVIEWED DATE 10/11/11

PROJECT ID 102310

DRAWING NO C-55752

REV 1

ECN-11-TA-03-1398-0000-0265

C:\pwworking\phx\d0239251\102310-S-1001-R1.dwg, Oct 13, 2011 @ 4:06pm

ENV-RCRA-12-0059

ENCLOSURE 1

LAUR-12-10463

GENERAL NOTES:

1. IF THIS SHEET IS NOT 24"X36", THEN IT IS A REDUCED SIZE PLOT. USE GRAPHIC SCALE ACCORDINGLY.
2. TANK DIMENSIONS SHOWN ARE PRELIMINARY AND MAY BE MODIFIED BASED ON FINAL GEOTECHNICAL RESULTS. FINAL TANK DIMENSIONS WILL BE SHOWN IN CONSTRUCTION SUBMITTAL PROVIDED BY TANK SUPPLIER.
3. TANK DESIGN WILL BE COMPLETED BY TANK SUPPLIER. SEE LANL SPECIFICATON 43 4116. SUPPORTING DOCUMENTAION REGARDING THE TANK WILL BE PROVIDED AS A CONSTRUCTION SUBMITTAL BY THE TANK SUPPLIER.

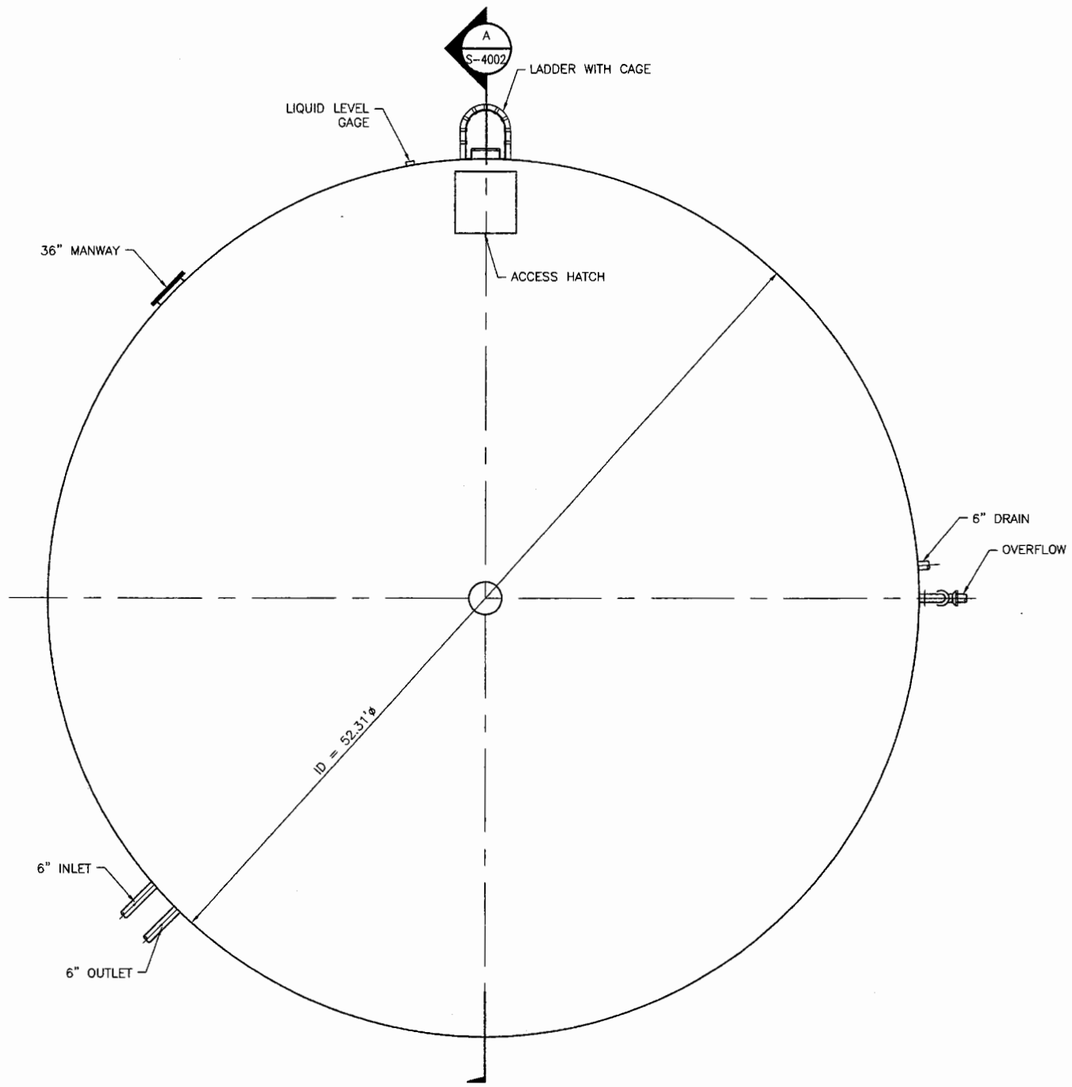

STORAGE TANK PLAN

0' 1' 2' 4' 6' 8'
1/4"=1'-0"

LANL BUILDING OFFICIAL APPROVED
RA Izard
105567
10-19-11
11-094

REVIEWED FOR LANL SDM/ANSI 4N25 COMPLIANCE PER ASS 341-2 SPL 18

TERRY H. GAUDI NEW MEXICO 12250 REGISTERED PROFESSIONAL ENGINEER
9-22-11

NO	DATE	CLASS REV	DESCRIPTION	DWN	VER	CHKD	SUB	APP

HDR ENGINEERING INC.
2155 LOUISIANA BLVD., NE
SUITE 9500
ALBUQUERQUE, NM 87110
MAIN: (505) 830-9400 FAX: (505) 830-9454

SERF EXPANSION

400,000 GALLON STORAGE TANK PLAN

BLDG. 3085 TA-03

DRAWN	H.G.
DESIGN	C.Z.
CHECKED	Z.S.
DATE	10-14-11

SUBMITTED

APPROVED FOR RELEASE

Los Alamos NATIONAL LABORATORY PO Box 1663 Los Alamos, New Mexico 87545

SHEET S-1002

17 OF 67

CLASSIFICATION UNCLASSIFIED REVIEWER DATE 10/17/11

PROJECT ID 102310

DRAWING NO C-55752

REV 0

C:\pwworking\phx\d0224118\102310-S-1002-R0.dwg, Oct 13, 2011 @ 4:08pm

ECN-11-TA-03-1398-0000-0265

ENV-RCRA-12-0059

ENCLOSURE 1

LAUR-12-10463

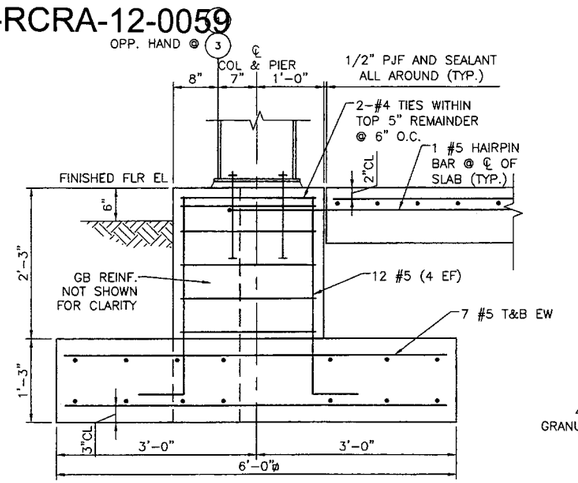

A S-1000 SECTION, FOOTING F2

1"=1'-0"

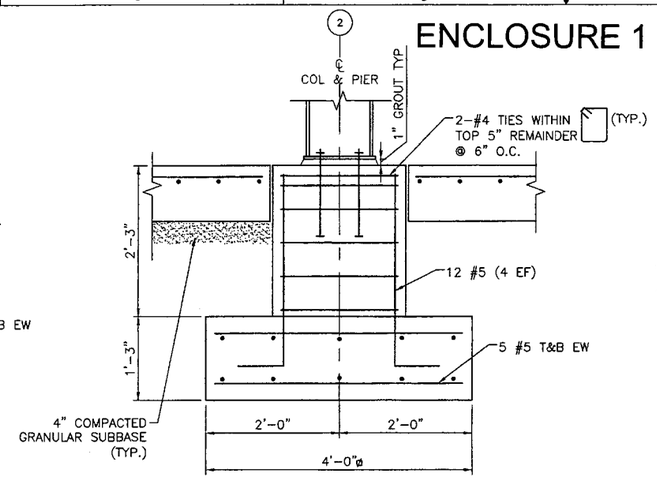

B S-1000 SECTION, FOOTING F1

1"=1'-0"

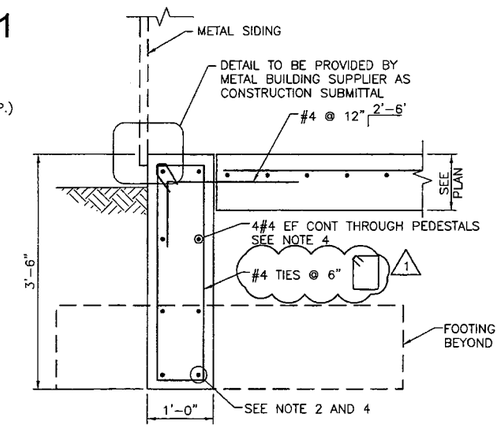

C S-1000 SECTION, TYP GRADE BEAM

1"=1'-0"

GENERAL NOTES:

1. IF THIS SHEET IS NOT 24"X36", THEN IT IS A REDUCED SIZE PLOT. USE GRAPHIC SCALE ACCORDINGLY.
2. EMBED HORIZONTAL REINFORCEMENT IN GRADE BEAM AT COLUMN'S FOOTING LEVEL 1'-3" INTO THE FOOTING.
3. FOR BASE PLATE AND ANCHOR LOCATIONS SEE S-3001.
4. ALL HORIZONTAL BARS IN GRADE BEAMS ABOVE FOOTING ARE CONTINUED THROUGH THE PEDESTALS. HORIZONTAL BARS TERMINATING AT CORNER PEDESTALS SHALL HAVE 90° HOOK SIMILAR TO DETAIL 5/C-5000. USE THE LONGEST PRACTICAL BARS. SPLICES SHALL BE IN MID POINT BETWEEN PEDESTALS AND STAGGERED.

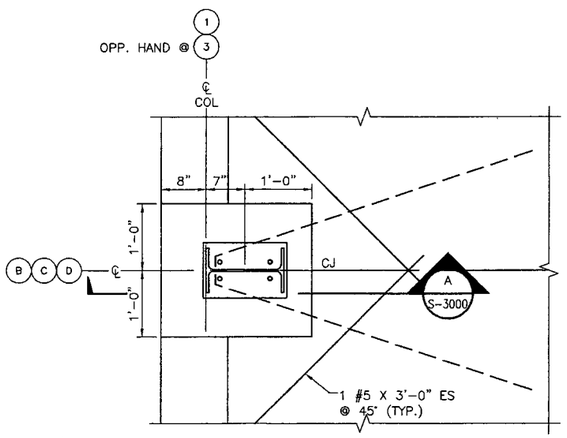

1 DETAIL

1"=1'-0"

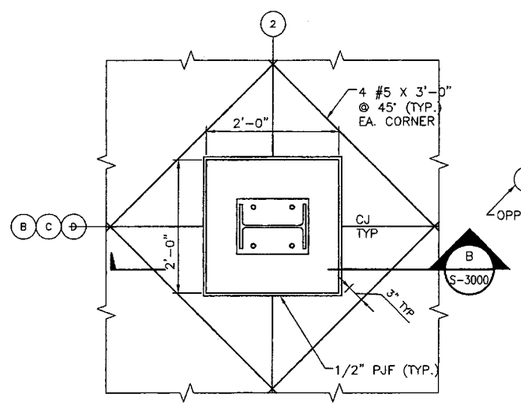

2 DETAIL

1"=1'-0"

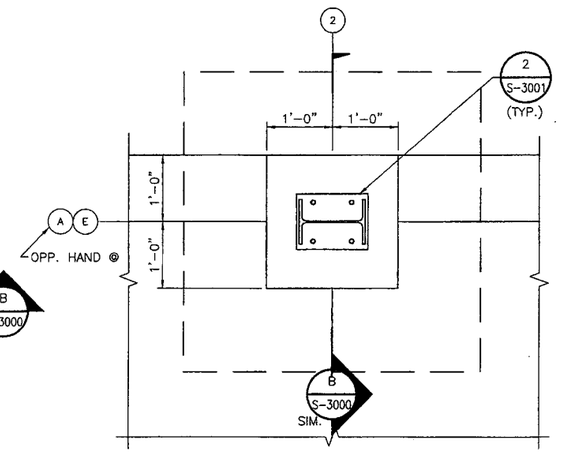

3 DETAIL

1"=1'-0"

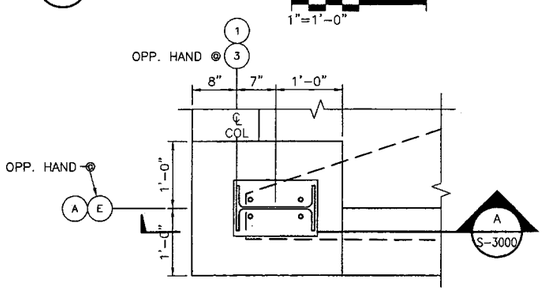

4 DETAIL

1"=1'-0"

5 DETAIL (NOT USED)

1"=1'-0"

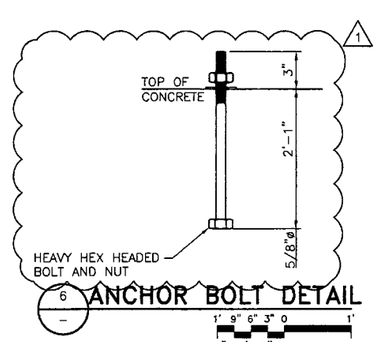

6 ANCHOR BOLT DETAIL

1"=1'-0"

LANL BUILDING OFFICIAL
SIG. N. Mond
ID 105567
DATE 10-19-11
SUB. 11-094
APPROVED
REVIEWED FOR LANL STANDARDS COMPLIANCE PER ISD 341-1 & CN 18

JEFF N. SAGER NEW MEXICO 12250 REGISTERED PROFESSIONAL ENGINEER
9-22-11

NO	DATE	CLASS REV	DESCRIPTION	DWN	VER	CHKD	SUB	APP
1	10/4/11	–	LANL REVIEW COORDINATION UPDATE	BF	ZS	–	–	–

HDR ENGINEERING INC.
2155 LOUISIANA BLVD., NE
SUITE 8000
ALBUQUERQUE, NM 87110
MAIN: (505) 830-3400 FAX: (505) 830-5454

SERF EXPANSION

SERF BUILDING STRUCTURAL FOUNDATION SECTIONS AND DETAILS

BLDG. 3093 TA-03

DRAWN	H.G.
DESIGN	C.Z.
CHECKED	Z.S.
DATE	10-14-11

SUBMITTED

APPROVED FOR RELEASE

Los Alamos NATIONAL LABORATORY PO Box 1663 Los Alamos, New Mexico 87545

SHEET S-3000 18 OF 67

CLASSIFICATION UNCLASSIFIED REVIEWER DATE 10/17/11

PROJECT ID 102310 DRAWING NO C-55752 REV 1

ECN-11-TA-03-1398-0000-0265

C:\pwworking\phx\d0239251\102310-S-3000-R1.dwg, Oct 14, 2011 @ 8:19am

ENV-RCRA-12-0059

ENCLOSURE 1

LAUR-12-10463

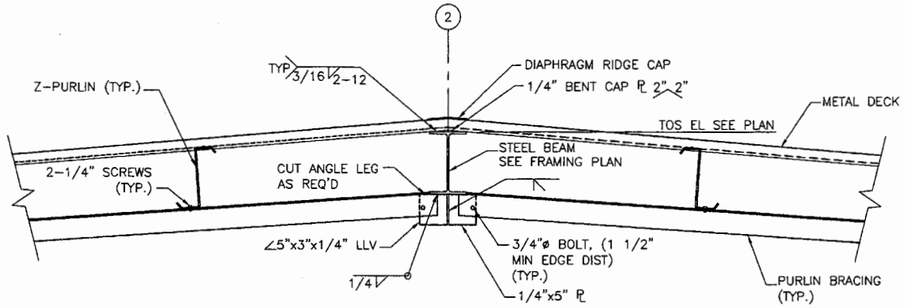

A S-1001 SECTION

1' 9" 6" 3" 0 1'
1"=1'-0"

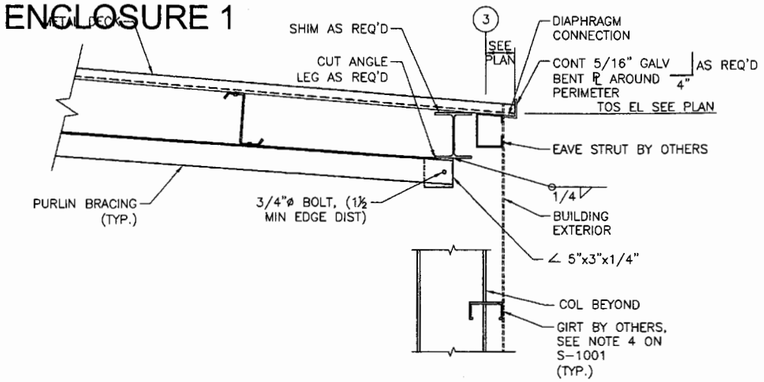

B S-1001 SECTION

1' 9" 6" 3" 0 1'
1"=1'-0"

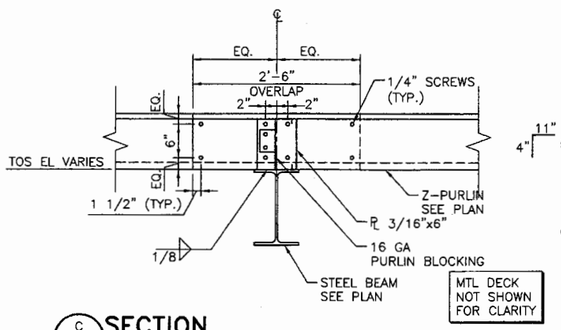

C S-1001 SECTION

1' 9" 6" 3" 0 1'
1"=1'-0"

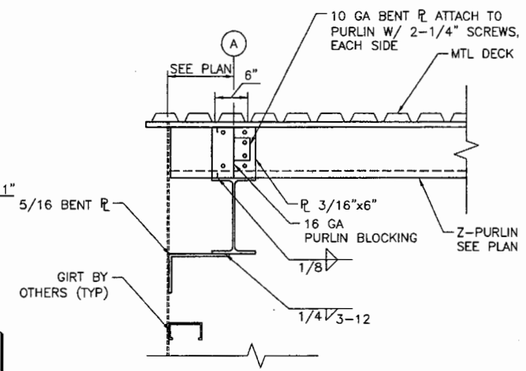

D S-1001 SECTION

1' 9" 6" 3" 0 1'
1"=1'-0"

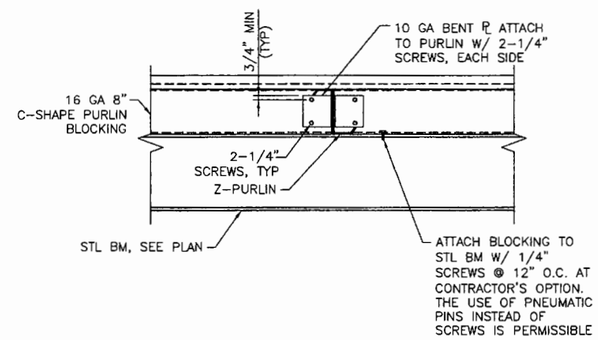

E S-1001 SECTION

1' 9" 6" 3" 0 1'
1"=1'-0"

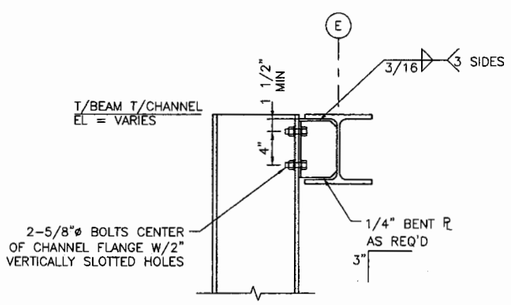

F S-1001 SECTION

4" 0 6" 1'
1 1/2"=1'-0"

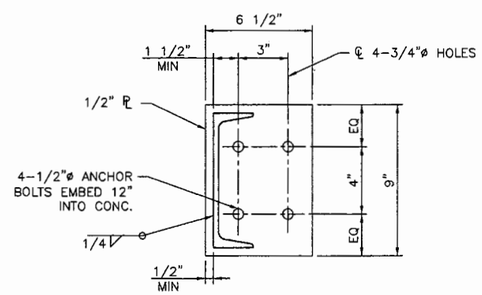

1 S-4000 DETAIL

0 1" 2" 4" 6" 8"
3"=1'-0"

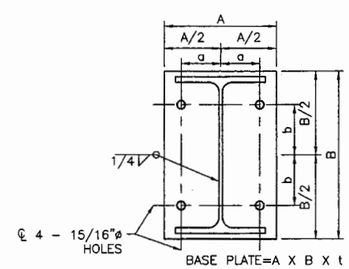

MARK	A	B	a	b	t
BP-1	10"	15"	3 1/2"	4 1/2"	1/2"
BP-2	10"	15"	3 1/2"	4 1/2"	7/8"

2 - BASE PLATE SCHEDULE DETAIL

SCALE: NONE

GENERAL NOTES:

1. IF THIS SHEET IS NOT 24"X36", THEN IT IS A REDUCED SIZE PLOT. USE GRAPHIC SCALE ACCORDINGLY.
2. ALL SECONDARY STRUCTURAL FRAMING AND BUILDING SKIN IS BEING PROVIDED BY A BUILDING SUPPLIER IN ACCORDANCE WITH SPECIFICATION SECTION 13 3419. ALL SUPPORTING INFORMATION INCLUDING CALCULATIONS WILL BE PROVIDED BY THE BUILDING SUPPLIER AS A PART OF CONSTRUCTION SHOP DRAWING SUBMITTAL. ALL PREFABRICATED SECONDARY FRAMING SHALL BE DESIGNED BY A LICENSED PROFESSIONAL ENGINEER REGISTERED IN NEW MEXICO, SEE SPECIFICATIONS, SECTION 13 3419.

LANL BUILDING OFFICIAL APPROVED
BY RAWout
DATE 10-19-11
CONT. 11-094
REVIEWED FOR LANL STANDARDS COMPLIANCE PER ISO 241-2: CH 10

ZEEV H. SABBI NEW MEXICO 12250 REGISTERED PROFESSIONAL ENGINEER
9-22-11

NO	DATE	CLASS REV	DESCRIPTION	DWN	VER	CHKD	SUB	APP

HDR ENGINEERING INC.
2155 LOUISIANA BLVD., NE SUITE 9500 ALBUQUERQUE, NM 87110 MAIN: (505) 830-5400 FAX: (505) 830-5454

SERF EXPANSION

SERF BUILDING STRUCTURAL FRAMING SECTIONS AND DETAILS

BLDG. 3093 TA-03

DRAWN	H.G.
DESIGN	C.Z.
CHECKED	Z.S.
DATE	10-14-11

SUBMITTED APPROVED FOR RELEASE

Los Alamos NATIONAL LABORATORY PO Box 1663 Los Alamos, New Mexico 87545

SHEET S-3001 19 OF 67

CLASSIFICATION UNCLASSIFIED REVIEWER DATE 10/17/11

PROJECT ID 102310 DRAWING NO C-55752 REV 0

ECN-11-TA-03-1398-0000-0265

C:\pwworking\phx\d0224118\102310-S-3001-R0.dwg, Oct 13, 2011 @ 4:09pm

ENV-RCRA-12-0059

ENCLOSURE 1

LAUR-12-10463

GENERAL NOTES:

1. IF THIS SHEET IS NOT 24"X36", THEN IT IS A REDUCED SIZE PLOT. USE GRAPHIC SCALE ACCORDINGLY.

– INDICATES PROTECTED ZONE

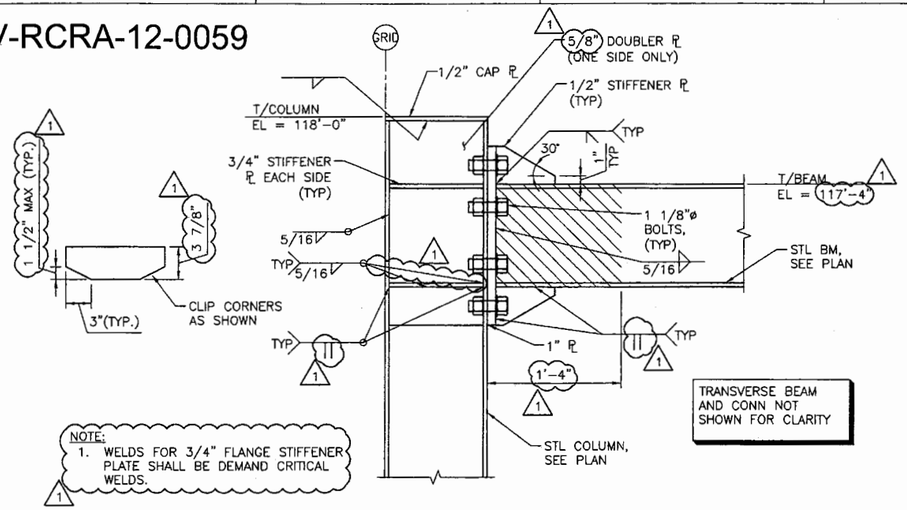

NOTE:
1. WELDS FOR 3/4" FLANGE STIFFENER PLATE SHALL BE DEMAND CRITICAL WELDS.

A / S-4000 TYPICAL MOMENT CONNECTION AT EXTERIOR (SLRS)

1 1/2"=1'-0"

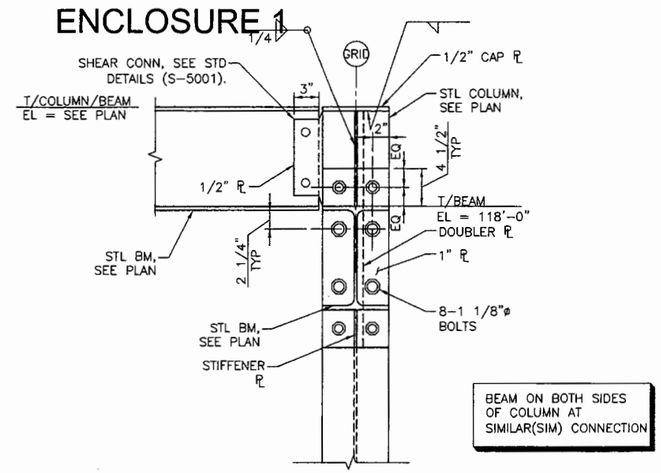

B / S-4000 SECTION (SLRS)

1 1/2"=1'-0"

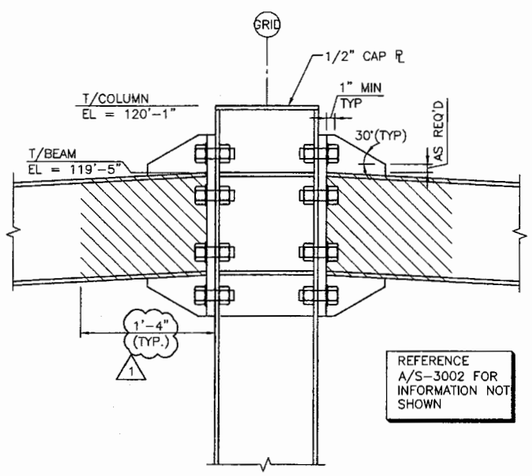

C / S-4000 TYPICAL MOMENT CONNECTION AT INTERIOR (SLRS)

1 1/2"=1'-0"

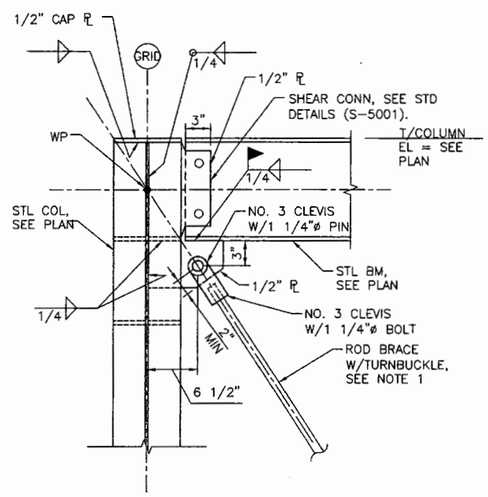

NOTE:
1. ENSURE BRACE IS TAUGHT AFTER ALL BUILDING DEAD LOADS HAVE BEEN APPLIED.

D / S-4000 TYPICAL BRACE CONN TOP (SLRS)

1 1/2"=1'-0"

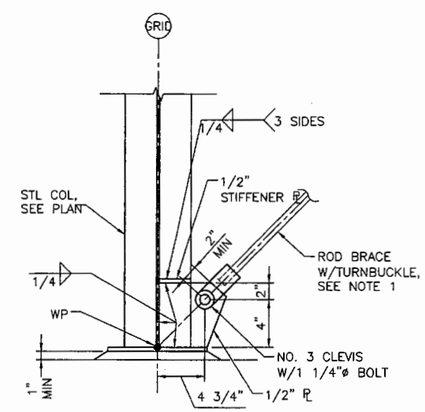

NOTE:
1. ENSURE BRACE IS TAUGHT AFTER ALL BUILDING DEAD LOADS HAVE BEEN APPLIED.

E / S-4000 TYPICAL BRACE CONN AT BASE (SLRS)

1 1/2"=1'-0"

LANL BUILDING OFFICIAL APPROVED 105567 10-19-11 11-094

REVIEWED FOR LANL ENGINEERING COMPLIANCE PER LIP 1.1-1.0

JEFF H. SAUCI NEW MEXICO 12250 REGISTERED PROFESSIONAL ENGINEER 9-22-11

NO	DATE	CLASS REV	DESCRIPTION	DWN	VER	CHKD	SUB	APP
1	10/4/11	–	LANL REVIEW COORDINATION UPDATE	BF	CZ	ZS	–	–

HDR ENGINEERING INC.
2155 LOUISIANA BLVD., NE
SUITE 9500
ALBUQUERQUE, NM 87110
MAIN: (505) 830-5400 FAX: (505) 830-5454

SERF EXPANSION

SERF BUILDING STRUCTURAL FRAMING SECTIONS AND DETAILS

BLDG. 3093 TA-03

DRAWN	H.G.
DESIGN	C.Z.
CHECKED	Z.S.
DATE	10-14-11

SUBMITTED

APPROVED FOR RELEASE

Los Alamos NATIONAL LABORATORY PO Box 1663 Los Alamos, New Mexico 87545

SHEET S-3002

20 OF 67

CLASSIFICATION UNCLASSIFIED REVIEWER DATE 10/17/11

PROJECT ID 102310

DRAWING NO C-55752

REV 1

ECN-11-TA-03-1398-0000-0265

C:\pwworking\phx\d0239251\102310-S-3002-R1.dwg, Oct 13, 2011 @ 4:07pm

ENV-RCRA-12-0059

ENCLOSURE 1

LAUR-12-10463

GENERAL NOTES:

1. IF THIS SHEET IS NOT 24"X36", THEN IT IS A REDUCED SIZE PLOT. USE GRAPHIC SCALE ACCORDINGLY.
2. REFERENCE ARCHITECTURAL DRAWINGS FOR OPENINGS AND SIZES.

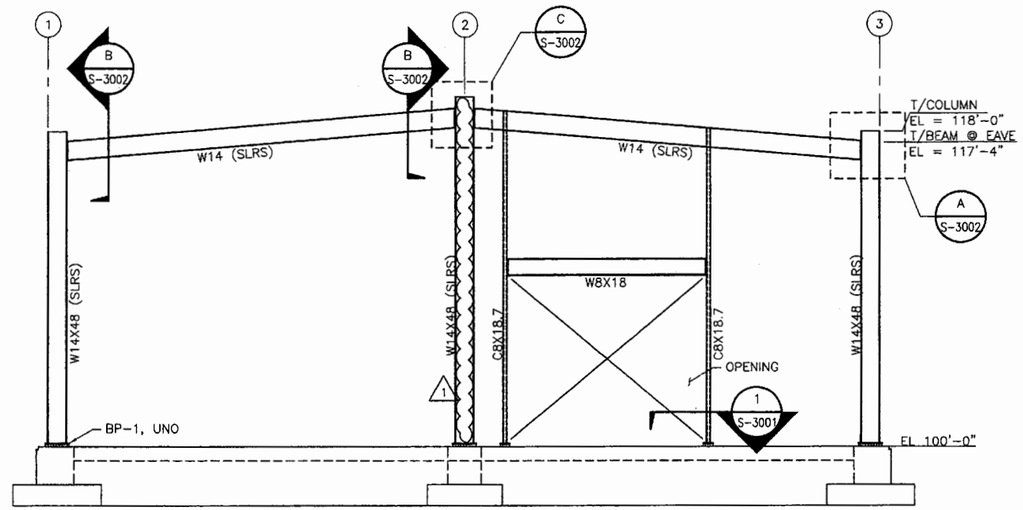

A S-1001 STRUCTURAL BUILDING SECTION NORTH

0' 1' 2' 4' 6' 8'
1/4"=1'-0"

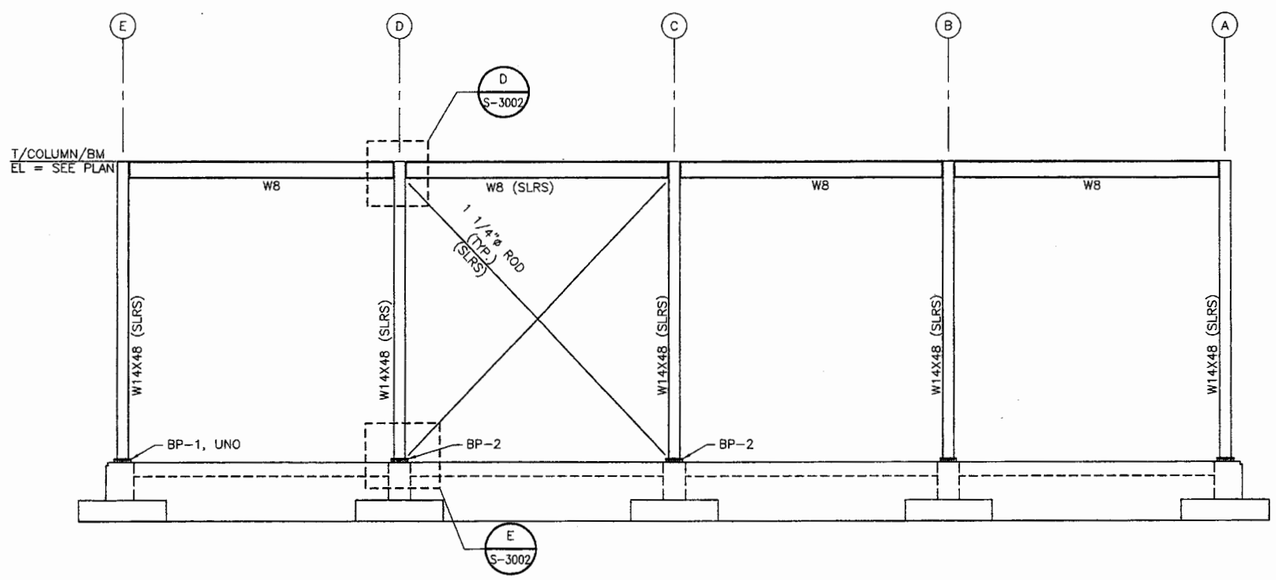

B S-1001 STRUCTURAL BUILDING SECTION WEST

0' 1' 2' 4' 6' 8'
1/4"=1'-0"

LANL BUILDING OFFICIAL APPROVED
105567
10-19-11
11-094
REVIEWED FOR LANL STANDARDS COMPLIANCE PER ISO 241-7.2 CH 10

ZEEV H. SAGEL NEW MEXICO 12250 REGISTERED PROFESSIONAL ENGINEER
9-22-11

NO	DATE	CLASS REV	DESCRIPTION	DWN	VER	CHKD	SUB	APP
1	10/4/11	–	LANL REVIEW COORDINATION UPDATE	BF	CZ	ZS	–	–

HDR ENGINEERING INC.
2155 LOUISIANA BLVD., NE
SUITE 9500
ALBUQUERQUE, NM 87110
MAIN: (505) 830-5400 FAX: (505) 830-5454

SERF EXPANSION

SERF BUILDING STRUCTURAL SECTIONS

BLDG. 3093 TA-03

DRAWN	H.C.
DESIGN	C.Z.
CHECKED	Z.S.
DATE	10-14-11

SUBMITTED

APPROVED FOR RELEASE

Los Alamos NATIONAL LABORATORY PO Box 1663 Los Alamos, New Mexico 87545

SHEET S-4000

21 OF 67

CLASSIFICATION UNCLASSIFIED REVIEWED DATE 10/17/11

PROJECT ID 102310 DRAWING NO C-55752 REV 1

ECN-11-TA-03-1398-0000-0265

C:\pwworking\phx\a0239251\102310-S-4000-R1.dwg, Oct 13, 2011 @ 4:07pm

ENV-RCRA-12-0059

ENCLOSURE 1

LAUR-12-10463

GENERAL NOTES:

1. IF THIS SHEET IS NOT 24"X36", THEN IT IS A REDUCED SIZE PLOT. USE GRAPHIC SCALE ACCORDINGLY.
2. REFERENCE ARCHITECTURAL DRAWINGS FOR OPENINGS AND SIZES.

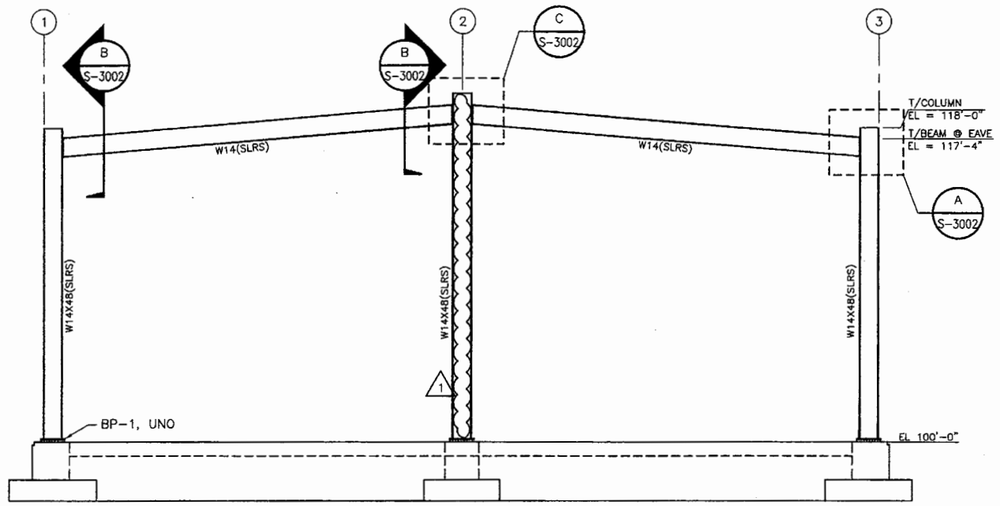

A S-1001 STRUCTURAL BUILDING SECTION SOUTH

0' 1' 2' 4' 6' 8'
1/4"=1'-0"

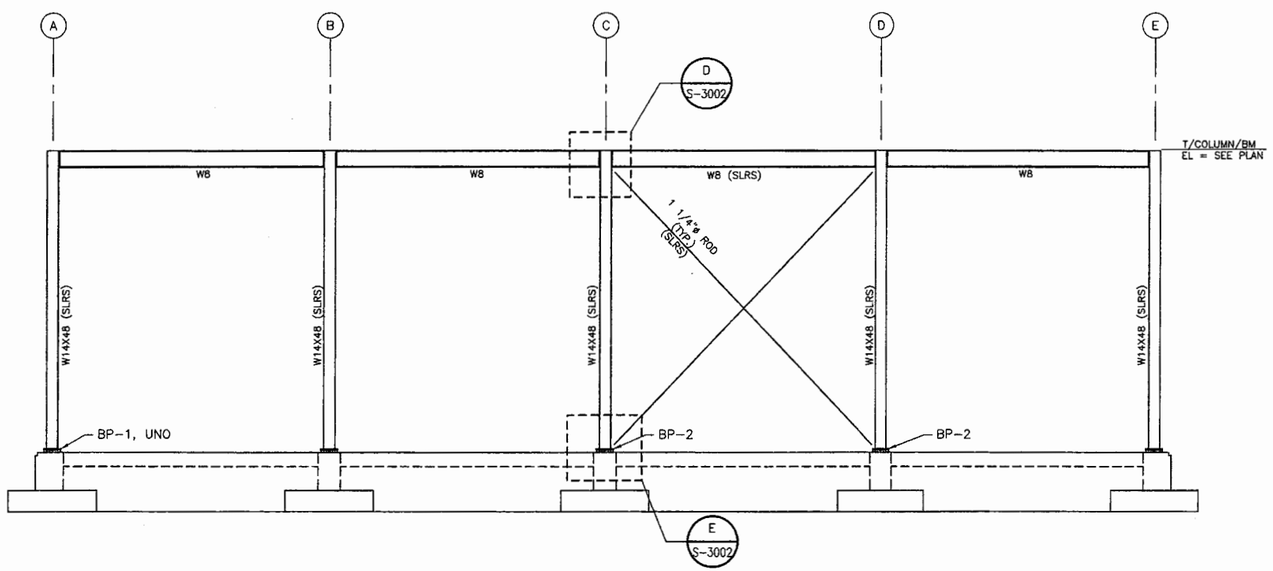

B S-1001 STRUCTURAL BUILDING SECTION EAST

0' 1' 2' 4' 6' 8'
1/4"=1'-0"

LANL BUILDING OFFICIAL
SO RAlmond
IP 105567
DATE 10-19-11
SUB 11-094
APPROVED
REVIEWED FOR LANL STANDARDS COMPLIANCE PER IS 2.4.1 - 2, CH 1-6

ZEEV N. SAGGI
NEW MEXICO
12250
REGISTERED PROFESSIONAL ENGINEER
9-22-11

NO	DATE	CLASS REV	DESCRIPTION	DWN	VER	CHKD	SUB	APP
1	10/4/11	–	LANL REVIEW COORDINATION UPDATE	BF	CZ	ZS	–	–

HDR ENGINEERING INC.
2155 LOUISIANA BLVD., NE
SUITE 6500
ALBUQUERQUE, NM 87110
MAIN: (505) 830-5400 FAX: (505) 830-5454

SERF EXPANSION

SERF BUILDING STRUCTURAL SECTIONS

BLDG. 3093 TA-03

DRAWN	H.G.
DESIGN	C.Z.
CHECKED	Z.S.
DATE	10-14-11

SUBMITTED

APPROVED FOR RELEASE

Los Alamos NATIONAL LABORATORY PO Box 1663 Los Alamos, New Mexico, 87545

SHEET S-4001

22 OF 67

CLASSIFICATION UNCLASSIFIED REVIEWER DATE 10/7/11

PROJECT ID 102310

DRAWING NO C-55752

REV 1

ECN-11-TA-03-1398-0000-0265

C:\pwworking\phx\d0239251\102310-S-4001-R1.dwg, Oct 13, 2011 @ 4:08pm

ENV-RCRA-12-0059

ENCLOSURE 1

LAUR-12-10463

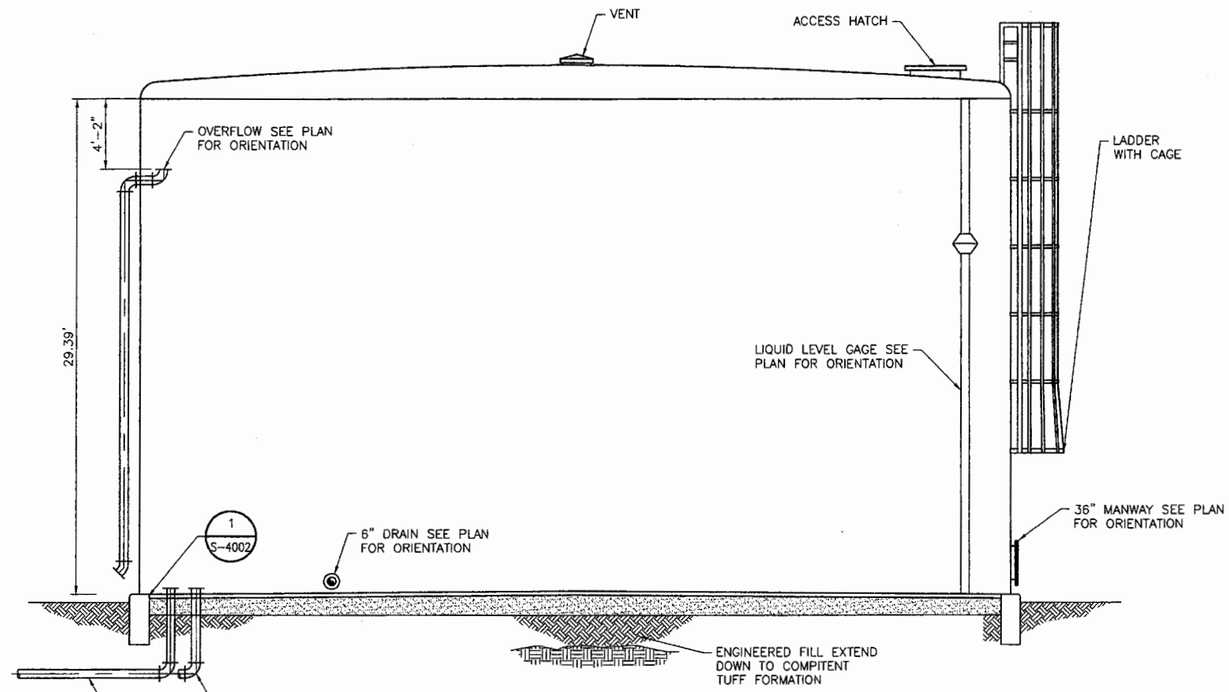

A S-1002 STORAGE TANK SECTION

0' 1' 2' 4' 6' 8'
1/4"=1'-0"

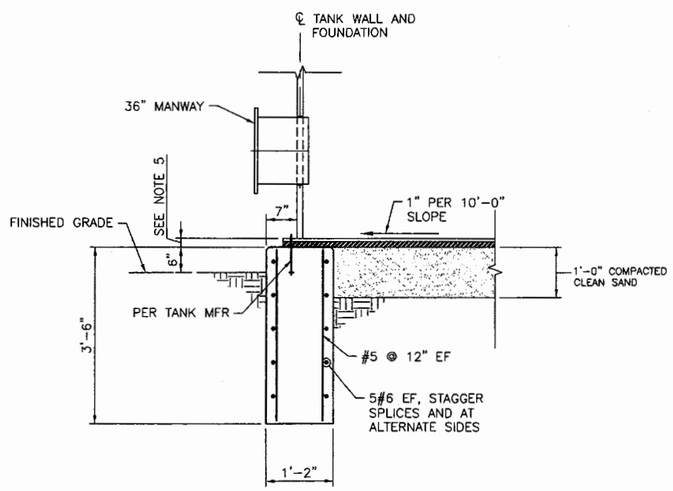

1 TYPICAL RING WALL FOUNDATION

1' 6" 0 1' 2'
3/4"=1'-0"

GENERAL NOTES:

1. IF THIS SHEET IS NOT 24"X36", THEN IT IS A REDUCED SIZE PLOT. USE GRAPHIC SCALE ACCORDINGLY.
2. FOR EXTENT OF ENGINEERED FILL SEE 1/S-5001.
3. TANK DIMENSIONS SHOWN ARE NOMINAL AND MAY BE MODIFIED. FINAL TANK DIMENSIONS WILL BE SHOWN IN CONSTRUCTION SUBMITTAL PROVIDED BY TANK SUPPLIER.
4. TANK DESIGN WILL BE COMPLETED BY TANK SUPPLIER. SEE LANL SPECIFICATON 43 4116. SUPPORTING DOCUMENTAION REGARDING THE TANK WILL BE PROVIDED AS A CONSTRUCTION SUBMITTAL BY THE TANK SUPPLIER.
5. PLACE MINIMUM 1/2" THICK ASPHALT IMPREGNATED FIBERBOARD UNDER STEEL BOTTOM OF TANK.
6. TANK DESIGNER REFER TO SPECIFICATION SECTION 43-4116.

LANL BUILDING CODE
RA Trout
105567
10-19-11
11-094
APPROVED

JEEV H. SAGGI
NEW MEXICO
12250
REGISTERED PROFESSIONAL ENGINEER
9-22-11

NO	DATE	CLASS REV	DESCRIPTION	DWN	VER	CHKD	SUB	APP

HDR ENGINEERING INC.
2155 LOUISIANA BLVD., NE
SUITE 9500
ALBUQUERQUE, NM 87110
MAIN (505) 830-5400 FAX: (505) 830-5454

SERF EXPANSION

400,000 GAL EFFLUENT STORAGE TANK SECTIONS AND DETAILS

BLDG. 3085 TA-03

DRAWN	H.G.
DESIGN	C.Z.
CHECKED	Z.S.
DATE	10-14-11

SUBMITTED

APPROVED FOR RELEASE

Los Alamos NATIONAL LABORATORY
PO Box 1663
Los Alamos, New Mexico 87545

SHEET S-4002
23 OF 67

CLASSIFICATION UNCLASSIFIED REVIEWER DATE 10/17/11

PROJECT ID 102310 DRAWING NO C-55752 REV 0

ECN-11-TA-03-1398-0000-0265

C:\pwworking\phx\d0224118\102310-S-4002-R0.dwg, Oct 13, 2011 @ 4:12pm

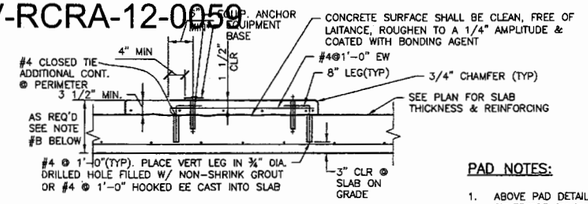

MINIMUM PAD THICKNESS TABLE	
AB DIA	MIN PAD THK
1/4" DIA.	5"
3/8" DIA.	6 1/2"
1/2" DIA.	8"
5/8" DIA.	9 1/2"
3/4" DIA.	11"
7/8" DIA.	12 1/2"
1" DIA.	14"

NOTES:

A. PROVIDE ABOVE PAD UNDER ALL ELECTRICAL AND MECHANICAL EQUIPMENT SUPPORTED ON STRUCTURAL SLABS. ALSO PROVIDE FOR EQUIPMENT WEIGHING LESS THAN 5000 POUNDS WHICH ARE SUPPORTED ON GRADE OR WHERE SPECIFICALLY NOTED ON PLANS.

B. PAD THICKNESS SHALL BE THE LARGER OF SLAB THICKNESS PLUS 3 ½" OR MINIMUM PAD THICKNESS FROM TABLE. PROVIDE AN ADDITIONAL LAYER OF #4@1'-0" EACH WAY WITH 1 ½" CLEAR TOP AND BOTTOM FOR EACH 8" ADDITIONAL PAD THICKNESS EXCEEDING THE 3 ½" MINIMUM THICKNESS.

C. THIS DETAIL SHOULD BE USED FOR PADS UP TO 14" HIGH. ANCHOR SIZES TO FOLLOW THE RECOMMENDATION OF THE EQUIPMENT MANUFACTURER, IF NO SIZES ARE GIVEN, USE SIZES SHOWN ON THE DETAIL.

PAD NOTES:

1. ABOVE PAD DETAILS APPLY FOR SUPPORT OF ALL EQUIPMENT UNLESS INDICATED OTHERWISE ON THE DRAWINGS.

2. BEFORE EQUIPMENT SUPPORT PADS ARE CAST, THE PAD SIZES AND REINFORCING SHALL BE APPROVED BY THE ENGINEER AS BEING CAPABLE OF SUPPORTING EQUIPMENT TO BE PLACED THEREON. EQUIPMENT BASE DIMENSIONS SHALL BE THE LARGER OF a. AS DETERMINED BY THE EQUIPMENT MANUFACTURER OR b. AS INDICATED ON THE DRAWINGS. SUBMIT ALL EQUIPMENT DIMENSIONS AND LOADS TO ENGINEER. THE SIZE, NUMBER,(TYP)E, LOCATION, AND THREAD PROJECTION OF THE ANCHORS SHALL BE AS DETERMINED BY THE EQUIPMENT MANUFACTURER AND AND SHALL BE AS APPROVED BY THE ENGINEER. ANCHORS SHALL BE HELD IN POSITION WITH A TEMPLATE WHILE EQUIPMENT PAD IS CAST.

3. 6" MINIMUM PAD EDGE DIMENSION TO EQUIPMENT ANCHORS APPLIES FOR ALL EQUIPMENT SUPPORT PADS.

1 (TYP) EQUIPMENT SUPPORT PAD DETAIL

SCALE: NONE

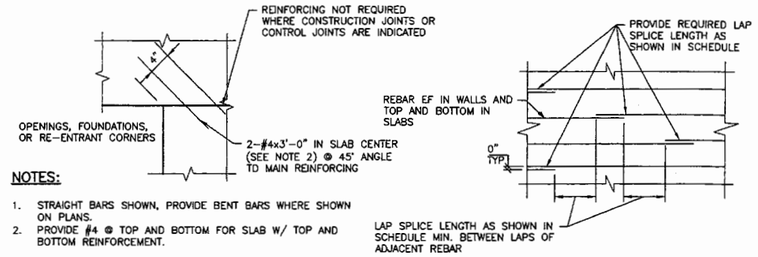

NOTES:

1. STRAIGHT BARS SHOWN, PROVIDE BENT BARS WHERE SHOWN ON PLANS.
2. PROVIDE #4 @ TOP AND BOTTOM FOR SLAB W/ TOP AND BOTTOM REINFORCEMENT.

2 (TYP) SLAB ON GRADE RE-ENTRANT CORNER DETAIL

SCALE: NONE

3 CIRCULAR HORIZONTAL SLAB & WALL REINFORCING

SCALE: NONE

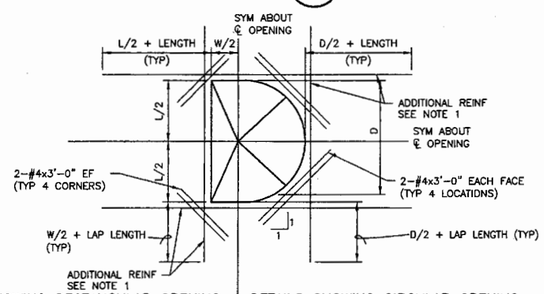

DETAILS SHOWING RECTANGULAR OPENING | DETAILS SHOWING CIRCULAR OPENING

NOTES:

1. ADDITIONAL REINFORCING SHALL BE THE SAME SIZE AS DISCONTINUOUS REINFORCEMENT AT OPENING. QUANTITY OF REINFORCING IN EACH DIRECTION SHALL BE EQUAL TO OR ONE GREATER THAN THE NUMBER OF DISCONTINUOUS BARS. PLACE 1/2 OF ADDITIONAL REINFORCING BARS EACH SIDE OF OPENING. PLACE ADDITIONAL REINFORCEMENT AT 3" O.C. ((TYP) BOTH DIRECTIONS AND ALL LAYERS OF REINFORCEMENT).

2. ADDITIONAL REINFORCING SHALL EXTEND BEYOND EDGE OF OPENING AS SHOWN ABOVE. ADDITIONAL BARS MAY TERMINATE AT THE END OF THE WALL WITH A STANDARD HOOK WHERE THE LENGTH OF THE WALL WILL NOT PERMIT BARS TO EXTEND AS SHOWN ABOVE.

3. (TYP) WALL OR SLAB REINFORCING NOT SHOWN FOR CLARITY. TERMINATE (TYP) REINFORCING 2" CLEAR TO OPENING.

4. OPENINGS 1'-0" OR LESS IN SLABS & OPENINGS 1'-6" OR LESS IN WALLS, NO EXTRA REBAR ARE REQUIRED UNLESS SHOWN OTHERWISE. (TYP) REINFORCING SHALL BE SPREAD (NOT CUT) TO ALLOW OR OPENINGS TO BE MADE.

5. UNLESS SHOWN OTHERWISE ON DRAWINGS, PROVIDE EXTRA REINFORCING AROUND OPENINGS AS SHOWN AND INDICATED ABOVE.

4 OPENINGS IN SLABS & WALLS DETAIL EXTRA REBAR AROUND

SCALE: NONE

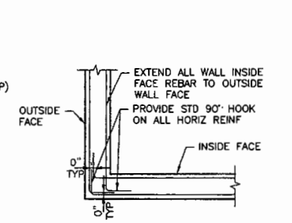

PLAN "A" WALL CORNER

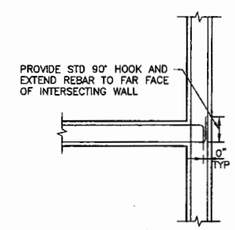

PLAN "B" WALL INTERSECTION

NOTES:

1. SEE INDIVIDUAL STRUCTURES FOR EXTRA HORIZONTAL REBAR AT CORNERS & WALL INTERSECTIONS.
2. WALL VERTICAL REBAR NOT SHOWN FOR CLARITY.
3. SEE DETAIL 6 THIS SHEET FOR STD 90° HOOK LENGTHS.

5 (TYP) WALL HORIZ REINFORCING DETAIL

SCALE: NONE

CONCRETE NOTES:

1. MINIMUM BAR SPLICE: PER TABLE UNLESS OTHERWISE NOTED.

MINIMUM LAP SPLICE LENGTHS fc=4000 psi					
BAR	* MIN BAR SPACING	LAPS FOR BARS SPACED GREATER THAN MIN. BAR SPACING		LAPS FOR BARS SPACED CLOSER THAN MIN. BAR SPACING	
		VERTICAL	OTHER	VERTICAL	OTHER
#3	3"	1'-4"	1'-6"	1'-4"	1'-6"
#4	3"	1'-7"	2'-0"	1'-8"	2'-2"
#5	3"	1'-11"	2'-6"	2'-7"	3'-4"
#6	4"	2'-4"	3'-0"	3'-8"	4'-9"
#7	4"	3'-6"	4'-6"	4'-11"	6'-5"
#8	4"	4'-7"	5'-11"	6'-6"	8'-6"
#9	4 1/2"	5'-9"	7'-6"	8'-3"	10'-9"
#10	5"	7'-4"	9'-6"	10'-6"	13'-7"
#11	5 5/8"	9'-0"	11'-6"	12'-10"	16'-8"

1.1 ALL REBAR SPLICES SHALL BE AS SHOWN UNDER HEADING "VERTICAL" EXCEPT IF SPLICED BARS ARE HORIZONTAL BARS WITH 1'-0" OR MORE CONCRETE BELOW. THEN SPLICE LENGTH SHALL BE AS SHOWN UNDER HEADING "OTHER".

1.2 * AT SPLICES THE BAR SPACING IS THE CENTER TO CENTER DISTANCE BETWEEN ADJACENT REBAR.

1.3 ALL SPLICES SHALL BE CONTACT SPLICES AND WIRED TOGETHER.

2. NO WELDED OR MECHANICAL SPLICES ARE PERMITTED UNLESS INDICATED OTHERWISE.
3. TACK WELDING OF REINFORCING OR ANCHOR BOLTS IS NOT PERMITTED.
4. UNLESS OTHERWISE NOTED PROVIDE COVERING FOR REINFORCING AS FOLLOWS:
   4.1 CONCRETE DEPOSITED AGAINST EARTH: 3 INCHES
   4.2 ALL OTHER REINFORCING: 2 INCHES
5. ALL BARS INDICATED AS BEING HDOKED SHALL HAVE STANDARD 90° HOOKS, UNO.

STANDARD 90° HOOKS								
HOOK LENGTH								
#3	#4	#5	#6	#7	#8	#9	#10	#11
6"	8"	10"	1'-0"	1'-2"	1'-4"	1'-7"	1'-10"	2'-0"

6 SPLICE & STD. 90° HOOK DETAILS

SCALE: NONE

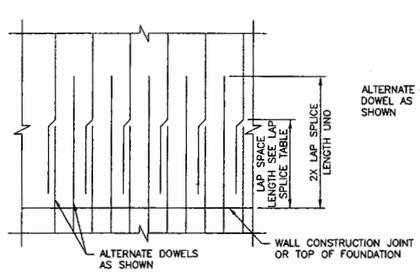

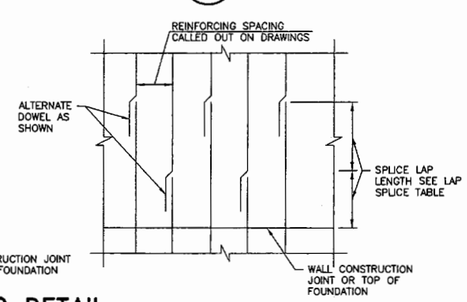

7 STAGGERED REINFORCING DETAIL

SCALE: NONE

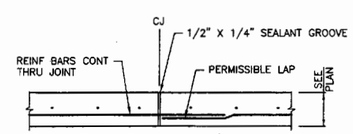

NOTE: SIMILAR DETAIL FOR SLAB WITH 2 LAYERS OF REINFORCEMENT.

8 SLAB REINF & CONTROL JOINT DETAIL

SCALE: NONE

LANL BUILDING OFFICIAL
NO. RA Wood
IT. 105567
DATE 10-19-11
CN. 11-094
APPROVED
REVIEWED FOR LANL STANDARDS COMPLIANCE PER ES-1-1 & P-341-18

KEEN N. SAGHI
NEW MEXICO
12250
REGISTERED PROFESSIONAL ENGINEER
9-22-11

NO	DATE	CLASS REV	DESCRIPTION	DWN	VER	CHKD	SUB	APP

HDR ENGINEERING INC.
2158 LOUISIANA BLVD., NE
SUITE 9500
ALBUQUERQUE, NM 87110
MAIN: (505) 830-5400 FAX: (505) 830-5454

SERF EXPANSION

STRUCTURAL STANDARD DETAILS

BLDG. TA-03

DRAWN	H.G.
DESIGN	C.Z.
CHECKED	Z.S.
DATE	10-14-11

SUBMITTED | APPROVED FOR RELEASE

Los Alamos NATIONAL LABORATORY PO Box 1663 Los Alamos, New Mexico 87545

SHEET S-5000

24 OF 67

CLASSIFICATION UNCLASSIFIED | REVIEWER | DATE 10/17/11

PROJECT ID	DRAWING NO	REV
102310	C-55752	0

ECN-11-TA-03-1398-0000-0265

C:\pwworking\phx\d0224118\102310-S-5000-R0.dwg, Oct 13, 2011 @ 4:11pm

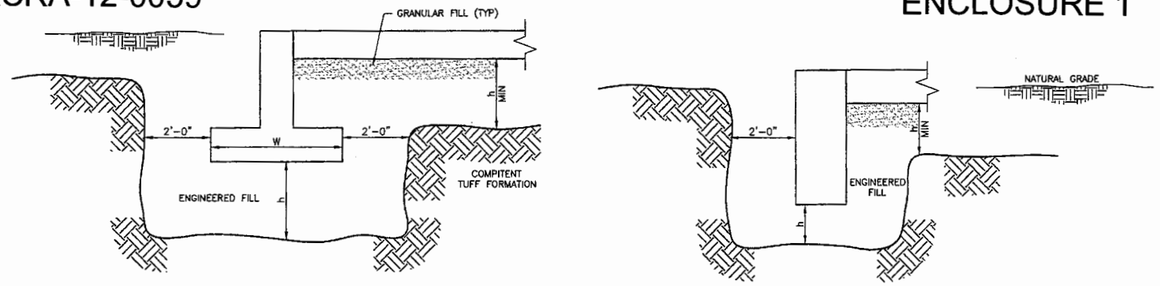

h = ENGINEERED FILL TO EXTEND DOWN TO COMPETENT TUFF FORMATION APPROXIMATELY 1'-5" TO 2'-0"

1 GENERAL FOOTING AND SLAB REQUIREMENT

SCALE: NONE

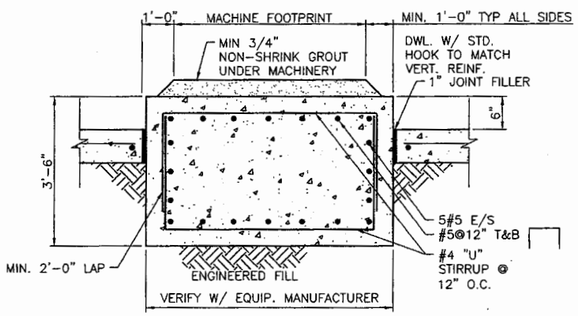

2 EQUIPMENT PAD THROUGH SLAB

SCALE: NONE

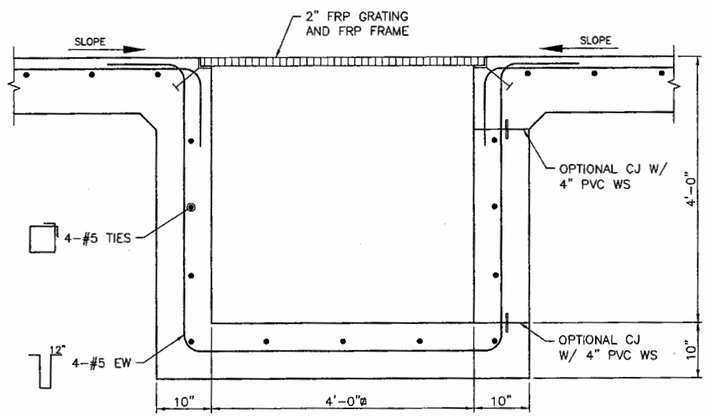

NOTE:
ENGINEERED FILL AND GRANULAR SUBBASE NOT SHOWN FOR CLARITY.

3 FLOOR SUMP SECTION

SCALE: NONE

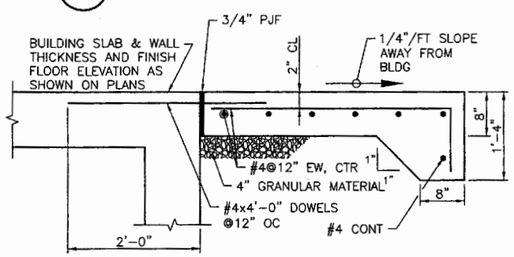

4 EXTERIOR CONCRETE SLAB REINFORCEMENT

SCALE: NONE

NOTES:

1. ALL BOLTS SHALL BE 7/8" DIA A325-N, UNO.
2. PROVIDE MINIMUM NUMBER OF BOLT ROWS "N" SHOWN AS THE TYPICAL CONNECTION. INCREASE NUMBER OF ROWS AND/OR BOLT DIA IF INDICATED ON PLANS.
3. MIN DISTANCE FROM ℄ OF THE BOLT TO A COPE SHALL BE 1 1/2" WHERE DEEP COPES ARE READ, INCREASE DISTANCE FROM TOP OF BEAM TO ℄ OF TOP BOLT.
4. USE STANDARD OR SHORT HORIZONTAL SLOTTED HOLES AS REQ'D.

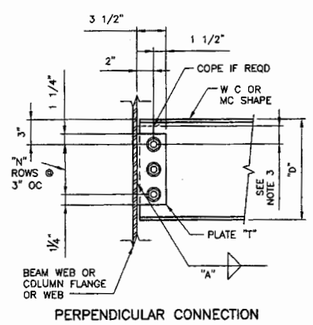

PERPENDICULAR CONNECTION

SINGLE PLATE BEAM CONNECTION SCHEDULE
3/4" DIA BOLTS

NOMINAL BEAM DEPTH "D"	NUMBER OF BOLT ROWS "N"	PLATE THICKNESS "T"	WELD SIZE "A"
W8	2	5/16"	1/4"
W10	2	5/16"	1/4"
W12	3	5/16"	1/4"
W14	3	5/16"	1/4"
W16	4	5/16"	1/4"
W18	5	5/16"	1/4"
W21	6	5/16"	1/4"
W24	7	3/8"	5/16"
W27	7	3/8"	5/16"
W30	8	7/16"	3/8"
W33	9	7/16"	3/8"
W36	10	7/16"	3/8"

5 SINGLE PLATE BEAM CONNECTION

SCALE: NONE

LANL BUILDING OFFICIAL APPROVED
105567
10-19-11
11-094
REVIEWED FOR LANL STANDARDS COMPLIANCE PER ISO 341 - 2, CH. 16

ZEEV H. SAGHI NEW MEXICO 12250 REGISTERED PROFESSIONAL ENGINEER
9-22-11

NO	DATE	CLASS REV	DESCRIPTION	DWN	VER	CHKD	SUB	APP

HDR ENGINEERING INC.
2155 LOUISIANA BLVD., NE
SUITE 8500
ALBUQUERQUE, NM 87110
MAIN: (505) 830-5400 FAX: (505) 830-5454

SERF EXPANSION

STRUCTURAL STANDARD DETAILS

BLDG. TA-03

DRAWN	H.G.
DESIGN	C.Z.
CHECKED	Z.S.
DATE	10-14-11

SUBMITTED

APPROVED FOR RELEASE

Los Alamos NATIONAL LABORATORY PO Box 1663 Los Alamos, New Mexico 87545

SHEET S-5001

25 OF 67

CLASSIFICATION UNCLASSIFIED REVIEWER DATE 10/17/11

PROJECT ID 102310

DRAWING NO C-55752

REV 0

ECN-11-TA-03-1398-0000-0265

C:\pwworking\phx\d0224118\102310-S-5001-R0.dwg, Oct 13, 2011 @ 4:13pm

ENV-RCRA-12-0059

ENCLOSURE 1

LAUR-12-10463

MATERIALS

- SUBGRADE
- GRAVEL
- SAND
- ASPHALT
- CONCRETE
- GROUT
- BRICK
- CONC. MASONRY UNIT
- STEEL
- BRASS/BRONZE
- STONE
- ALUMINUM
- PLASTICS
- RUBBER, SEALANT AND JOINT FILLER
- ROUGH WOOD LUMBER (CONTINUOUS)
- ROUGH WOOD LUMBER (NON-CONTINUOUS)
- WOOD FINISH (SURFACE)
- WOOD FINISH (END GRAIN)
- PLYWOOD
- GLASS (SECTION)
- RIGID INSULATION
- BATT INSULATION
- GYPSUM BOARD
- SUSPENDED ACOUSTICAL TILE

CEILING ASSEMBLIES

- 1' x 4' FLUORESCENT LIGHT
- 1' x 8' FLUORESCENT LIGHT
- 2' x 2' FLUORESCENT LIGHT
- 2' x 4' FLUORESCENT LIGHT
- 2' x 4' EMERGENCY LIGHT
- LIGHT
- WALL LIGHT
- DOWNLIGHT
- SUPPLY REGISTER (REGULAR AND STRIP)
- RETURN AIR GRILLE (REGULAR AND STRIP)
- ANNUNICATOR
- ACCESS PANEL
- VENT
- GYPSUM WALL BOARD CEILING ASSEMBLY
- THERMOSTAT
- SPEAKER
- MICROPHONE

FIRE PROTECTION SYSTEMS

- HEAT DETECTOR
- SMOKE DETECTOR
- SPRINKLER
- FIRE HOSE CABINET
- FIRE EXTINGUISHER IN CABINET
- FIRE EXTINGUISHER, WALL MOUNTED

PLUMBING ASSEMBLIES

- WATER CLOSET (FLOOR MOUNTED)
- WATER CLOSET (WALL MOUNTED)
- URINALS
- WALL MOUNTED LAVATORIES
- COUNTER LAVATORIES
- SERVICE SINK
- FLOOR DRAIN
- SAFETY SHOWER AND EYE WASH
- EYE WASH
- SAFETY SHOWER AND EYE WASH (BOOTH)

BUILDING SYSTEM SYMBOLS

DOOR TYPES

- SINGLE DOOR
- DOUBLE DOOR
- OVERHEAD COILING DOOR

WINDOW TYPES

- FIXED

ANNOTATION SYMBOLS

- COLUMN LINE CALLOUT
- SECTION
- DETAIL
- INTERIOR ELEVATION
- ELEVATION
- REVISION NOTE
- KEYED NOTE
- DOOR NUMBER (100A)
- DOOR DESIGNATION
- ROOM NUMBER
- FLOOR LEVEL
- WALL TYPES
- INSUL. TYPE
- FIRE RATING (HOURS)
- WALL TYPE AND STUD TYPE
- ELEVATION DATUM

STANDARD MOUNTING HEIGHTS

NOTES:

1. VERIFY ACCESSORY SIZE WITH MANUFACTURER TO ENSURE CONFORMANCE WITH ADA MOUNTING HEIGHTS.
2. DIMENSIONS TO TOILET ROOM ACCESSORIES ARE TO THE HIGHEST PORTION OF THE OPENING OR OPERATING DEVICE.
3. PLACE ELECTRICAL AND TELEPHONE DEVICES AT 44" ABOVE FINISH FLOOR AT CREDENZAS AND COUNTER TOPS.

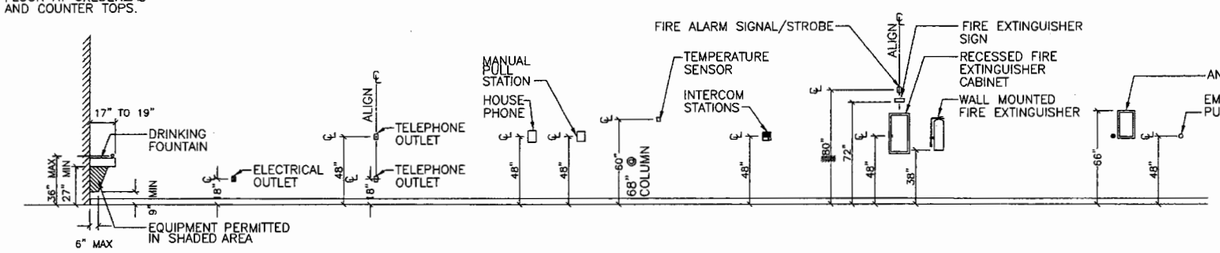

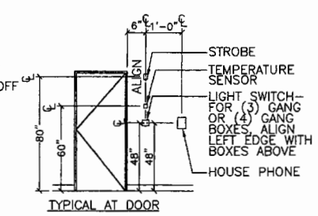

TYPICAL AT DOOR

ARCHITECTURAL ABBREVIATIONS

AAF	ABOVE ACCESS FLOOR
AC	ACOUSTICAL TILE
ADA	AMERICANS WITH DISABILITIES ACT
AFF	ABOVE FINISH FLOOR
AIB	AIR INFILTRATION BARRIER
ALUM	ALUMINUM
ANSI	AMERICAN NATIONAL SAFETY INSTITUTE
APPROX	APPROXIMATE
ARCH	ARCHITECTURAL
ASTM	AMERICAN SOCIETY FOR TESTING MATERIAL
AWT	ACOUSTICAL WALL TREATMENT
L	ANGLE
@	AT
BD	BOARD
BLKG	BLOCKING
BLDG	BUILDING
BM	BEAM
BOC	BOTTOM OF CONCRETE
BOS	BOTTOM OF STEEL
BOTT	BOTTOM
CG	CORNER GUARD
CHK	CHECKERED
CH/℄	CHANNEL
CIP	CAST-IN-PLACE
CJ	CONTROL JOINT
CLG	CEILING
CLKG	CAULKING
CMU	CONCRETE MASONRY UNIT
COL	COLUMN
CONC	CONCRETE
CONT	CONTINUOUS
COORD	COORDINATE
CPT	CARPET
CR	CRASH RAIL
CT	CERAMIC TILE
CTR	CENTER
℄	CENTERLINE
DAT	DATUM
DF	DRINKING FOUNTAIN
DIA	DIAMETER
DIM	DIMENSION
DN	DOWN
DR	DOOR
DS	DOWNSPOUT
DTL	DETAIL
DWG	DRAWING
EA	EACH
EIFS	EXTERIOR INSULATION AND FINISH SYSTEM
ELEC	ELECTRIC
EL/ELEV	ELEVATION
EM	ENTRANCE MAT
EMERG	EMERGENCY
EQ	EQUAL
EJ	EXPANSION JOINT
EXP	EXPOSED
EXT	EXTERIOR
(E)	EXISTING
FACT	FACTORY
FEXT	FIRE EXTINGUISHER
FF	FINISH FLOOR
FG	FINISH GRADE
FHS	FIRE HOSE STATION
FIN	FINISH
FLG	FLASHING
FLR	FLOOR
FM	FACTORY MUTUAL
FO	FACE OF
FOC	FACE OF CONCRETE
FOF	FACE OF FINISH
FOM	FACE OF MASONRY
FOS	FACE OF STUDS
FRP	FIBERGLASS REINFORCED PLASTIC
FT	FOOT/FEET
GA	GAUGE
GALV	GALVANIZED
GB	GRAB BAR
GL	GLASS
GR	GRILLE
GWB	GYPSUM WALLBOARD
GYP	GYPSUM
HB	HOSE BIBB
HC	HOLLOW CORE
HDBD	HARDBOARD
HDWR	HARDWARE
HM	HOLLOW METAL
HORIZ	HORIZONTAL
HT/HGT	HEIGHT
HC	HANDICAPPED
IN	INCH/INCHES
INSUL	INSULATION
INT	INTERIOR
JT	JOINT
KEC	KITCHEN EQUIPMENT CONTRACTOR
LAM	LAMINATED
MAS	MASONRY
MATL	MATERIAL
MBS	MARKER BOARD SURFACE
MECH	MECHANICAL
MEZZ	MEZZANINE
MFR	MANUFACTURER
MIN	MINIMUM
MIR	MIRROR
MISC	MISCELLANEOUS
MO	MASONRY OPENING
MS	MOP SINK
MTL	METAL
NA	NOT APPLICABLE
ND	NAPKIN DISPOSAL
NIC	NOT IN CONTRACT
NTS	NOT TO SCALE
NV	NAPKIN VENDOR
OC	ON CENTER
OFCI	OWNER FURNISHED CONTRACTOR INSTALLED
OPP	OPPOSITE
OTO	OUT TO OUT
P	PAINT
PL	PLATE
PLAM	PLASTIC LAMINATE
PLYWD	PLYWOOD
PNL	PANEL
PR	PAIR
PREFAB	PREFABRICATED
PTD	PAPER TOWEL DISPENSER
PVC	POLYVINYL CHLORIDE
R	RISER
RB	RUBBER BASE
RD	ROOF DRAIN
REF	REFERENCE
REQD	REQUIRED
RF	RESILIENT FLOORING
RFG	ROOFING
RL	RAIN LEADER
RM	ROOM
RO	ROUGH OPENING
SAC	SUSPENDED ACOUSTICAL CEILING
SAT	SUSPENDED ACOUSTICAL TILE
SCD	SEAT COVER DISPENSER
SD	SOAP DISPENSER
SECT	SECTION
SHT	SHEET
SIB	STRUCTURAL ISOLATION BREAK
SIM	SIMILAR
SS	STAINLESS STEEL
SSM	SOLID SURFACE MATERIAL
STC	SOUND TRANSMISSION COEFFICIENT
STD	STANDARD
STL	STEEL
STRUCT	STRUCTURAL
SUSP	SUSPENDED
SV	SHEET VINYL
TEMP	TEMPERED
THKNS	THICKNESS
THR	THRESHOLD
T.O.C.	TOP OF CONCRETE
T.O.M.	TOP OF MASONRY
T.O.P.	TOP OF PARAPET
T.O.S.	TOP OF STEEL
TPD	TOILET PAPER DISPENSER
TR	TREAD
TS	TUBE STEEL
TYP	TYPICAL
T/	TOP OF
UL	UNDERWRITERS LABORATORY
UNO	UNLESS NOTED OTHERWISE
V	VENT
VB	VAPOR BARRIER
VCT	VINYL COMPOSITION TILE
VERT	VERTICAL
VP	VENT PIPE
VRFY	VERIFY
VTR	VENT THROUGH ROOF
VWC	VINYL WALL COVERING
WC	WALLCOVERING
WD	WOOD
WP	WATERPROOF/WEATHERPROOF
WT	WEIGHT
WTRPC	WATERPROOF COATING
W/	WITH
W/O	WITHOUT

LANL BUILDING OFFICIAL APPROVED 105567 10-19-11 11-094

REVIEWED FOR LANL STANDARDS COMPLIANCE PER ISO 341-2, CH 18

STATE OF NEW MEXICO AJITH THOMAS NO. 004455 REGISTERED ARCHITECT 9/22/11

NO	DATE	CLASS REV	DESCRIPTION	DWN	VER	CHKD	SUB	APP

HDR ENGINEERING INC.
2156 LOUISIANA BLVD., NE SUITE 9500 ALBUQUERQUE, NM 87110 MAIN: (505) 830-5400 FAX: (505) 830-5454

SERF EXPANSION

LEGEND AND ABBREVIATIONS

BLDG. 3093 TA-03

DRAWN	B.S.
DESIGN	A.T.
CHECKED	W.W.
DATE	09-22-11

SUBMITTED Coy W Bump

APPROVED FOR RELEASE

Los Alamos NATIONAL LABORATORY PO Box 1663 Los Alamos, New Mexico, 87545

SHEET A-0001

26 OF 67

CLASSIFICATION UNCLASSIFIED REVIEWER DATE 10/17/11

PROJECT ID 102310 DRAWING NO C-55752 REV 0

ECN-11-TA-03-1398-0000-0265

C:\pworking\phx\d0224119\102310-A-0001-R0.dwg, Sep 22, 2011 @ 3:24pm

ENV-RCRA-12-0059

ENCLOSURE 1

LAUR-12-10463

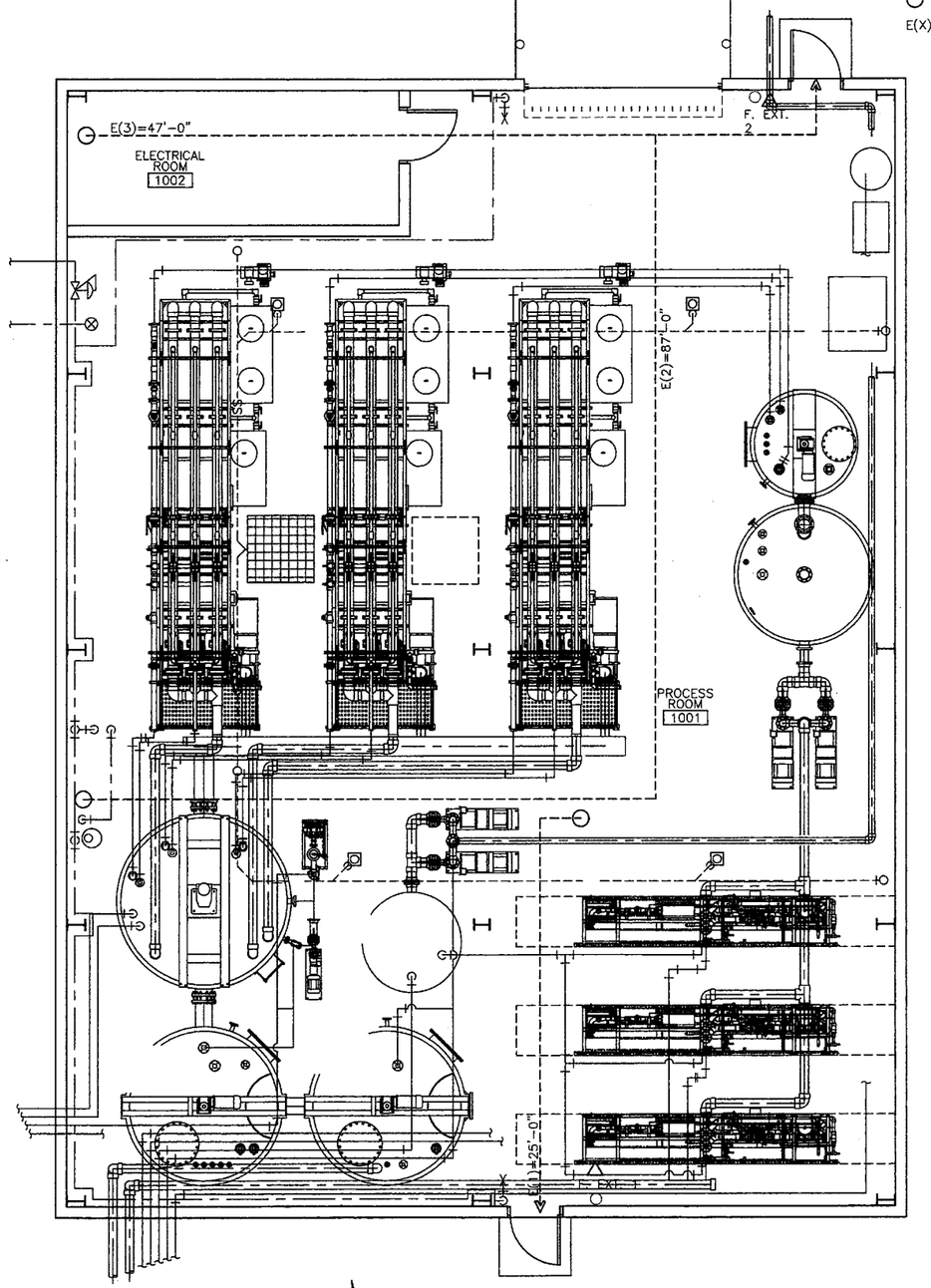

LIFE SAFETY PLAN

1/4"=1'0"

0' 1' 2' 4' 6' 8'
1/4"=1'-0"

LEGEND:

- ▷ FIRE EXTINGUISHER (F.EXT)
- → FIRE EXIT PATH
- ○ START OF FIRE EXIT PATH MEASUREMENT
- E(X) EXIT FROM BUILDING

GENERAL NOTES:

1. IF THIS SHEET IS NOT 24"X36", THEN IT IS A REDUCED SIZE PLOT. USE GRAPHIC SCALE ACCORDINGLY.

Building Code Data Table

FACILITY NAME: SANITARY EFFLUENT RECLAMATION FACILITY		
PROJECT DESCRIPTION		
Advanced water treatment facility that includes mechanical process equipment used to treat secondary treated wastewater and blowdown from SCC LANL facility. The project elements include a steel metal building for housing treatment equipment and associated chemicals.		
OCCUPANCY GROUP [IBC CHAPTER 3]	OCCUPANCY	
	WATER TREATMENT FACILITY	F-1
HAZARDOUS MATERIALS		
NONE		
INCIDENTAL USE SEPARATIONS [IBC TABLE 508.2]		
NONE REQUIRED		
OCCUPANCY SEPARATION / FIRE RATING [IBC TABLE 508.3.3]		
NONE REQUIRED	AUTOMATIC SPRINKLER SYSTEM (WET RISERS ARE BEING PROVIDED)	
CONSTRUCTION TYPE [IBC CHAPTER 6]	TYPE II-B	
GENERAL BUILDING LIMITATIONS [IBC TABLE 503]	AUTOMATIC SPRINKLER SYSTEM INCREASES MAXIMUM HEIGHT BY 20' AND MAXIMUM STORIES BY ONE	
MAXIMUM STORIES/HEIGHT ALLOWED		
F-1	3 STORIES/75 FT	
ACTUAL NUMBER OF STORIES/HEIGHT		
F-1	1 STORY/18'-0" FT	
MAXIMUM AREA ALLOWED PER FLOOR		
F-1	15,500 SF	
ACTUAL AREA PER FLOOR		
F-1	3300 GROSS SF	
ACTUAL TOTAL AREA	3,300 GROSS SF	
RATIO OF ACTUAL TO ALLOWABLE [IBC 508.3.3.2]	NA	
FIRE RESISTANCE OF BUILDING ELEMENTS [IBC TABLE 601]		
REQUIRED RATINGS	UNRATED FOR CONSTRUCTION TYPE II-B	
EXTERIOR WALL FIRE RESISTANCE [IBC TABLE 602]		
ACTUAL FIRE SEPARATION DISTANCE	30+ FEET	
REQUIRED WALL RATING	UNRATED WHEN OVER 10 FEET FIRE SEPARATION	
ACTUAL WALL RATING	UNRATED	
EXTERIOR OPENING PROTECTION [IBC TABLE 704.8]		
ACTUAL FIRE SEPARATION DISTANCE	30+ FEET	
REQUIRED OPENING PROTECTION	UNPROTECTED/UNLIMITED WHEN OVER 30 FEET	
ACTUAL OPENING PROTECTION	UNPROTECTED	
FIRE PROTECTION SYSTEMS [IBC CHAPTER 9]		
AUTOMATIC SPRINKLER SYSTEMS [IBC 903]	NOT REQUIRED (BUT PROVIDED)	
FIRE EXTINGUISHERS [IBC 906.1]	HAND HELD, MULTIPURPOSE FIRE EXTINGUISHER, RATED 4A-60 B:C, 10 LBS AT EACH EXTERIOR EXIT DOOR	
FIRE ALARM SYSTEM [IBC 907.2]	NOT REQUIRED (BUT PROVIDED)	
MEANS OF EGRESS [IBC CHAPTER 10]		
OCCUPANT LOAD FACTOR [IBC TABLE 1004.1.1]		
PROCESS ROOM	3154 SF (GROSS)	
ELECTRICAL ROOM	160 SF (GROSS)	
ALLOWABLE TRAVEL DISTANCE [IBC TABLE 1016.1]		
F-1	250 FEET (WITH SPRINKLER SYSTEM)	
ACTUAL TRAVEL DISTANCE		
MAXIMUM TRAVEL DISTANCE TO AN EXIT = 87 FT		
EXITS REQUIRED		EXITS PROVIDED
PROCESS ROOM: ONE	3154 NET SF/300 = 10.51 < 50	TWO (DIRECT TO EXTERIOR)
ELECTRICAL ROOM: ONE	160 NET SF/300 = 0.53	ONE

NO	DATE	CLASS REV	DESCRIPTION	DWN	VER	CHKD	SUB	APP

HDR ENGINEERING INC.
2155 LOUISIANA BLVD., NE
SUITE 9000
ALBUQUERQUE, NM 87110
MAIN: (505) 830-5400 FAX:
(505) 830-5454

LANL BUILDING OFFICIAL
SIG RAThomas
DATE 10-19-11
ACTIVITY 11-094
APPROVED

REVIEWED FOR LANL ENVIRONMENTAL COMPLIANCE PER ISO 3.4.1 + 2 CN 10

STATE OF NEW MEXICO
AJITH THOMAS
NO. 00448S
REGISTERED ARCHITECT
9/22/11

SERF EXPANSION

ARCHITECTURAL CODE DATA AND LIFE SAFETY PLAN

BLDG. 3093 TA-03

DRAWN	B.S.
DESIGN	A.T.
CHECKED	W.W.
DATE	09-22-11

SUBMITTED

APPROVED FOR RELEASE

Los Alamos NATIONAL LABORATORY
PO Box 1663
Los Alamos, New Mexico, 87545

SHEET A-1000
27 OF 67

CLASSIFICATION UNCLASSIFIED
REVIEWER
DATE 10/7/11

PROJECT ID 102310
DRAWING NO C-55752
REV 0

ECN-11-TA-03-1398-0000-0265

C:\pwworking\ahx\d0224119\102310-A-1000-R0.dwg, Sep 22, 2011 @ 2:04pm

ENV-RCRA-12-0059

LAUR-12-10463

ENCLOSURE 1

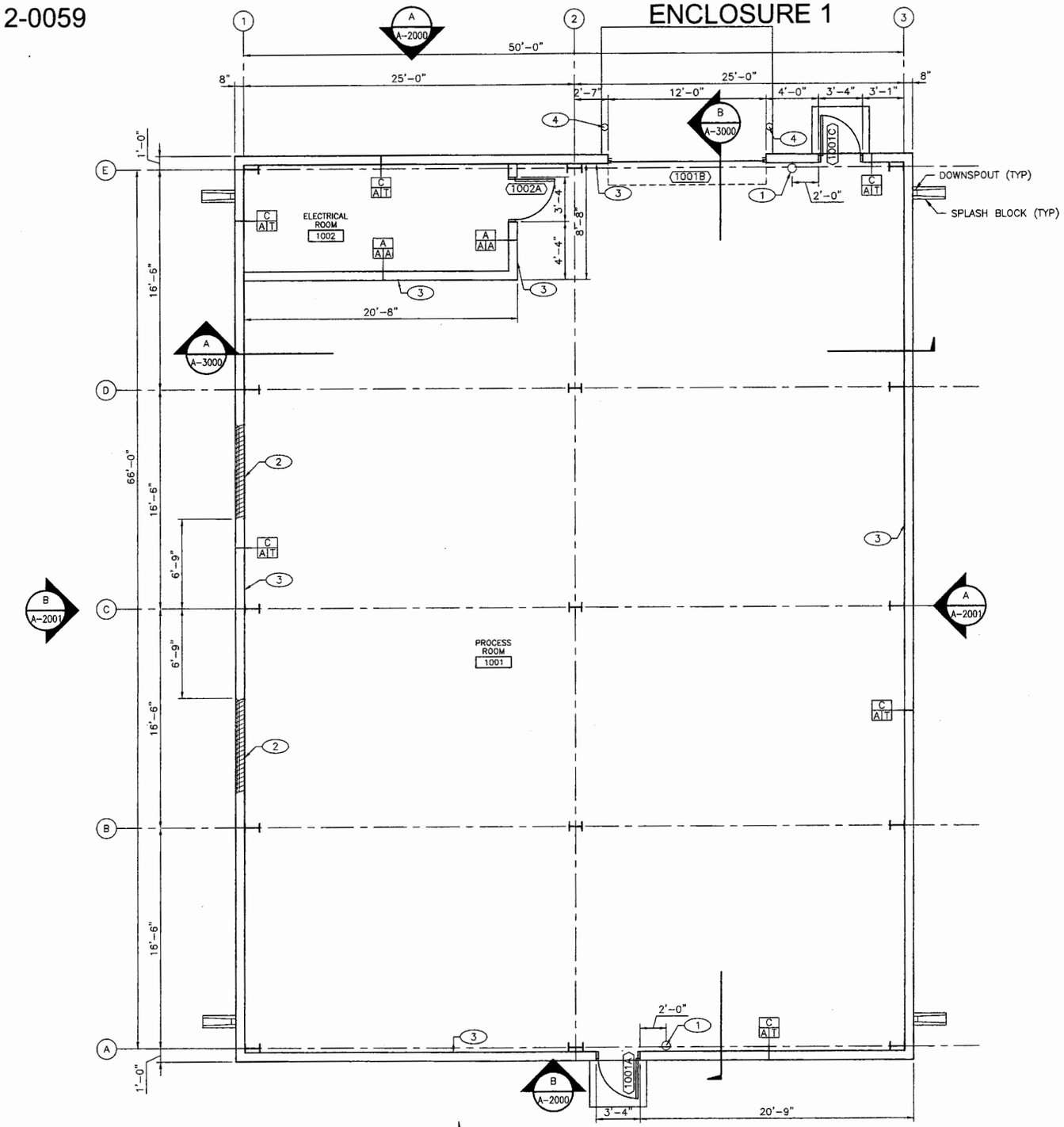

ARCHITECTURAL FLOOR PLAN

1/4"=1'-0"

GENERAL NOTES:

1. IF THIS SHEET IS NOT 24"X36", THEN IT IS A REDUCED SIZE PLOT. USE GRAPHIC SCALE ACCORDINGLY.
2. ALL SECONDARY STRUCTURAL FRAMING AND BUILDING SKIN IS BEING PROVIDED BY A BUILDING SUPPLIER IN ACCORDANCE WITH SPECIFICATION SECTION 13 3419. ALL SUPPORTING INFORMATION INCLUDING CALCULATIONS WILL BE PROVIDED BY THE BUILDING SUPPLIER AS A PART OF CONSTRUCTION SHOP DRAWING SUBMITTAL.
3. INTERIOR DIMENSIONS ARE TO GYP BOARD FINISH.
4. SEE DRAWING A-5000 FOR WALL TYPES.
5. SEE DRAWING A-7000 FOR ROOM FINISH AND DOOR SCHEDULES

KEYED NOTES:

1. BRACKET MOUNTED ABC TYPE FIRE EXTINGUISHER.
2. METAL WALL LOUVER SEE MECHANICAL LOUVER SCHEDULE AND DETAILS.
3. PROVIDE FIBERGLASS REINFORCED PLASTIC ANGLE AROUND ENTIRE PERIMETER OF PROCESS ROOM 1001 PER DETAIL 7/A-5000.
4. BOLLARD, REFER TO CIVIL DETAILS.

LANL BUILDING OFFICIAL APPROVED

STATE OF NEW MEXICO AJITH THOMAS NO. 004455 REGISTERED ARCHITECT

NO	DATE	CLASS REV	DESCRIPTION	DWN	VER	CHKD	SUB	APP

HDR ENGINEERING INC.
2155 LOUISIANA BLVD., NE SUITE 5500 ALBUQUERQUE, NM 87110 MAIN: (505) 830-5400 FAX: (505) 830-5454

SERF EXPANSION

ARCHITECTURAL FLOOR PLAN

BLDG. 3093 TA-03

DRAWN	B.S.	
DESIGN	A.T.	
CHECKED	W.W.	
DATE	09-22-11	

SUBMITTED

APPROVED FOR RELEASE

Los Alamos NATIONAL LABORATORY PO Box 1663 Los Alamos, New Mexico 87545

SHEET A-1001

28 OF 67

CLASSIFICATION UNCLASSIFIED REVIEWER DATE 10/17/11

PROJECT ID	DRAWING NO	REV
102310	C-55752	0

ECN-11-TA-03-1398-0000-0265

C:\pwworking\ahs\d0224119\102310-A-1001-R0.dwg, Sep 22, 2011 @ 3:28pm

ENV-RCRA-12-0059

ENCLOSURE 1

LAUR-12-10463

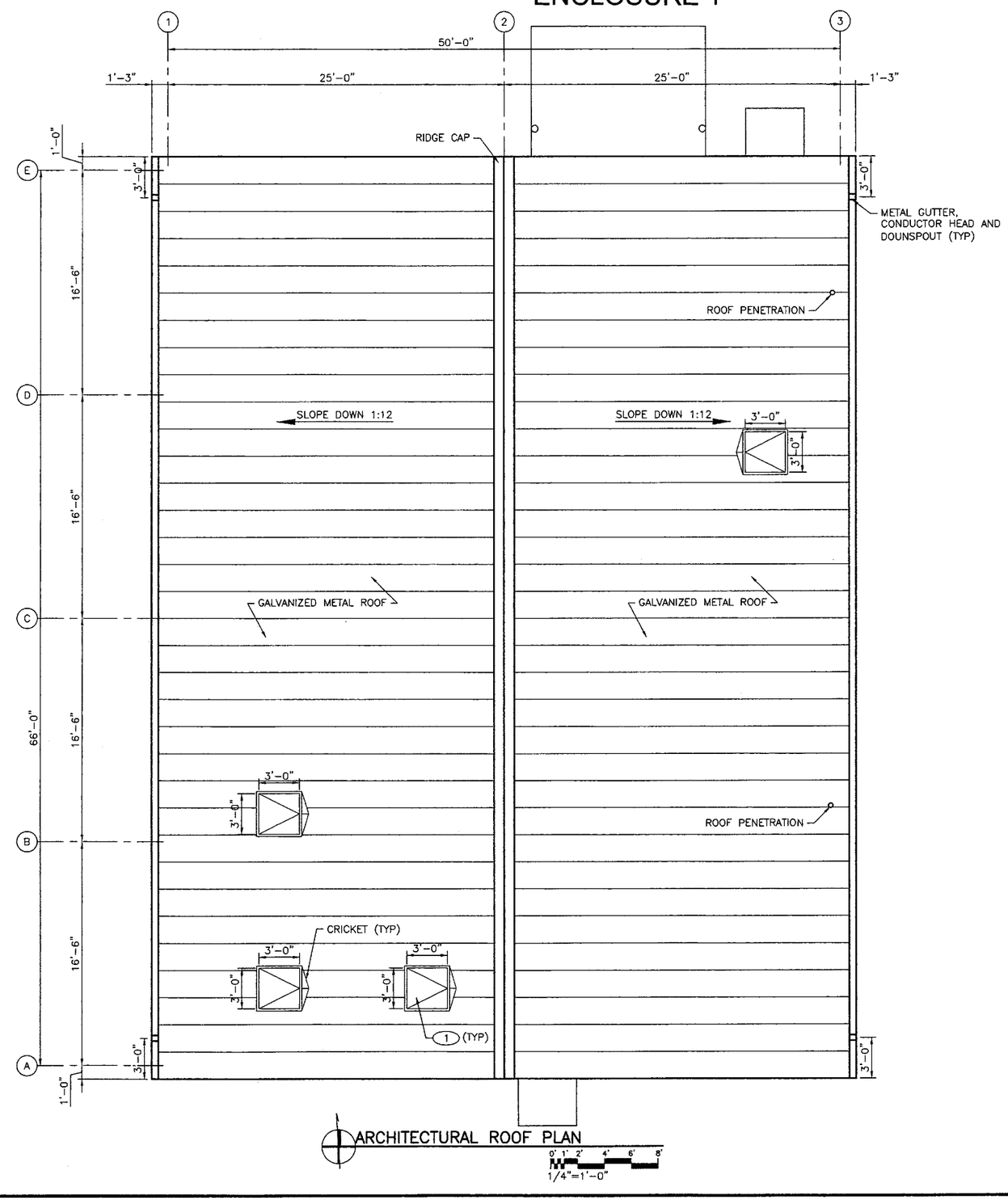

ARCHITECTURAL ROOF PLAN

1/4"=1'-0"

GENERAL NOTES:

1. IF THIS SHEET IS NOT 24"X36", THEN IT IS A REDUCED SIZE PLOT. USE GRAPHIC SCALE ACCORDINGLY.

KEYED NOTES:

1. ROOF HATCH – REFER TO SPECIFICATION 07 7233 FOR DETAILS. DETAILS FOR OPENING TO BE PROVIDED BY BUILDING MATERIALS SUPPLIER AS A CONSTRUCTION SUBMITTAL.

LANL BUILDING OFFICIAL APPROVED

STATE OF NEW MEXICO AJITH THOMAS NO. 0054485 REGISTERED ARCHITECT

NO	DATE	CLASS REV	DESCRIPTION	DWN	VER	CHKD	SUB	APP

HDR ENGINEERING INC.
2155 LOUISIANA BLVD., NE
SUITE 3300
ALBUQUERQUE, NM 87110
MAIN: (505) 630-5400 FAX:
(505) 830-5454

SERF EXPANSION

ARCHITECTURAL ROOF PLAN

BLDG. 3093 TA-03

DRAWN	B.S.	
DESIGN	A.T.	
CHECKED	W.W.	
DATE	09-22-11	

SUBMITTED

APPROVED FOR RELEASE

Los Alamos NATIONAL LABORATORY PO Box 1663 Los Alamos, New Mexico 87545

SHEET A-1002

29 OF 67

CLASSIFICATION UNCLASSIFIED REVIEWED DATE

PROJECT ID 102310 DRAWING NO C-55752 REV 0

ECN-11-TA-03-1398-0000-0265

C:\pwworking\phx\d0224119\102310-A-1002-R0.dwg, Sep 22, 2011 @ 2:05pm

ENV-RCRA-12-0059

ENCLOSURE 1

LAUR-12-10463

GENERAL NOTES:

1. IF THIS SHEET IS NOT 24"X36", THEN IT IS A REDUCED SIZE PLOT. USE GRAPHIC SCALE ACCORDINGLY.

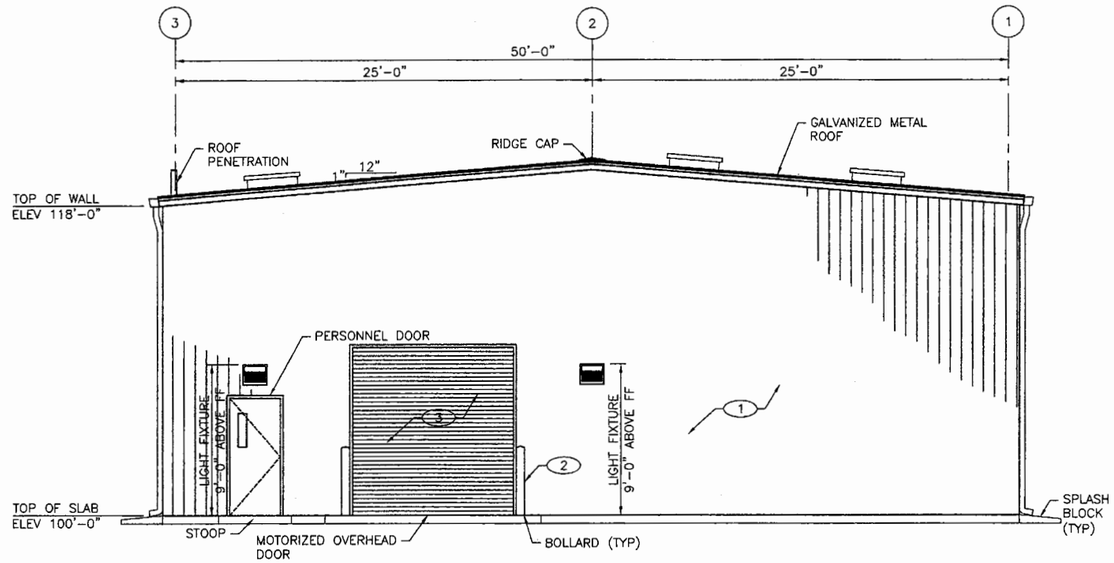

A / A-1000 NORTH ELEVATION

0' 1' 2' 4' 6' 8'
1/4"=1'-0"

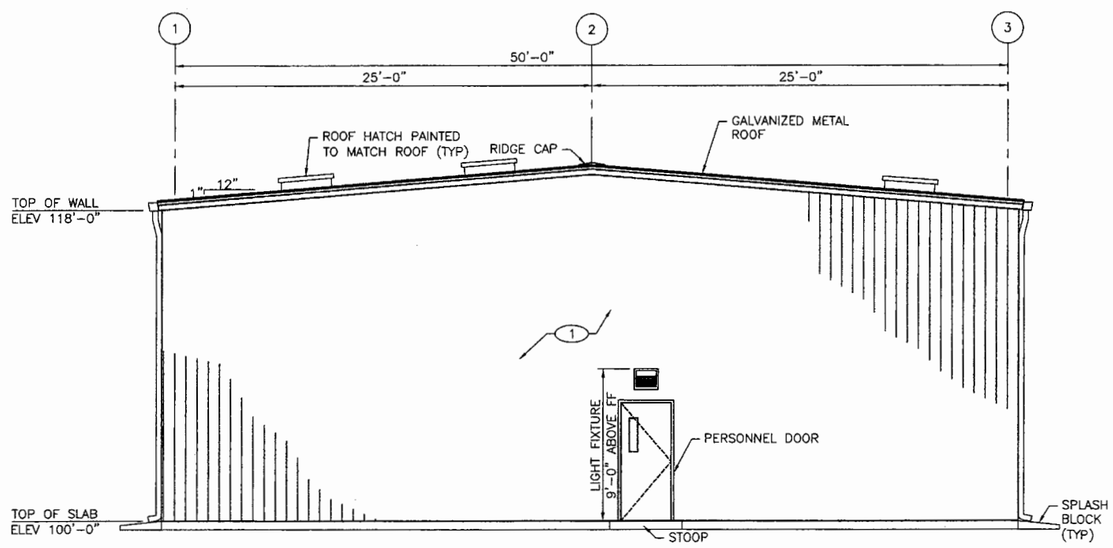

B / A-1000 SOUTH ELEVATION

0' 1' 2' 4' 6' 8'
1/4"=1'-0"

KEYED NOTES:

1. EXTERIOR METAL PANEL SYSTEM
2. 6" DIAMETER CONCRETE FILLED STEEL BOLLARD, SEE STRUCTURAL DETAILS
3. OVERHEAD COILING DOOR, SEE DOOR SCHEDULE
4. WALL MOUNTED EXHAUST FANS, SEE MECHANICAL DETAILS
5. METAL WALL LOUVER, SEE FLOOR PLAN

LANL BUILDING OFFICIAL APPROVED
105567
10-19-11
11-094
ADVISED FOR LANL STRUCTURE COMPLIANCE PER DOE 840.1 & DOE 413

STATE OF NEW MEXICO REGISTERED ARCHITECT AJITH THOMAS NO. 004455
9/22/11

NO	DATE	CLASS REV	DESCRIPTION	DWN	VER	CHKD	SUB	APP

HDR ENGINEERING INC.
2155 LOUISIANA BLVD., NE
SUITE 8500
ALBUQUERQUE, NM 87110
MAIN (505) 830-5400 FAX:
(505) 830-5454

SERF EXPANSION

ARCHITECTURAL BUILDING ELEVATIONS

BLDG. 3093 TA-03

DRAWN	B.S.
DESIGN	A.T.
CHECKED	W.W.
DATE	09-22-11

SUBMITTED

APPROVED FOR RELEASE

Los Alamos NATIONAL LABORATORY PO Box 1663 Los Alamos, New Mexico 87545

SHEET A-2000

30 OF 67

CLASSIFICATION UNCLASSIFIED REVIEWER DATE 10/17/11

PROJECT ID 102310 DRAWING NO C-55752 REV 0

ECN-11-TA-03-1398-0000-0265

C:\pwworking\phx\d0224119\102310-A-2000-R0.dwg, Sep 22, 2011 @ 2:05pm

ENV-RCRA-12-0059

ENCLOSURE 1

LAUR-12-10463

GENERAL NOTES:

1. IF THIS SHEET IS NOT 24"X36", THEN IT IS A REDUCED SIZE PLOT. USE GRAPHIC SCALE ACCORDINGLY.

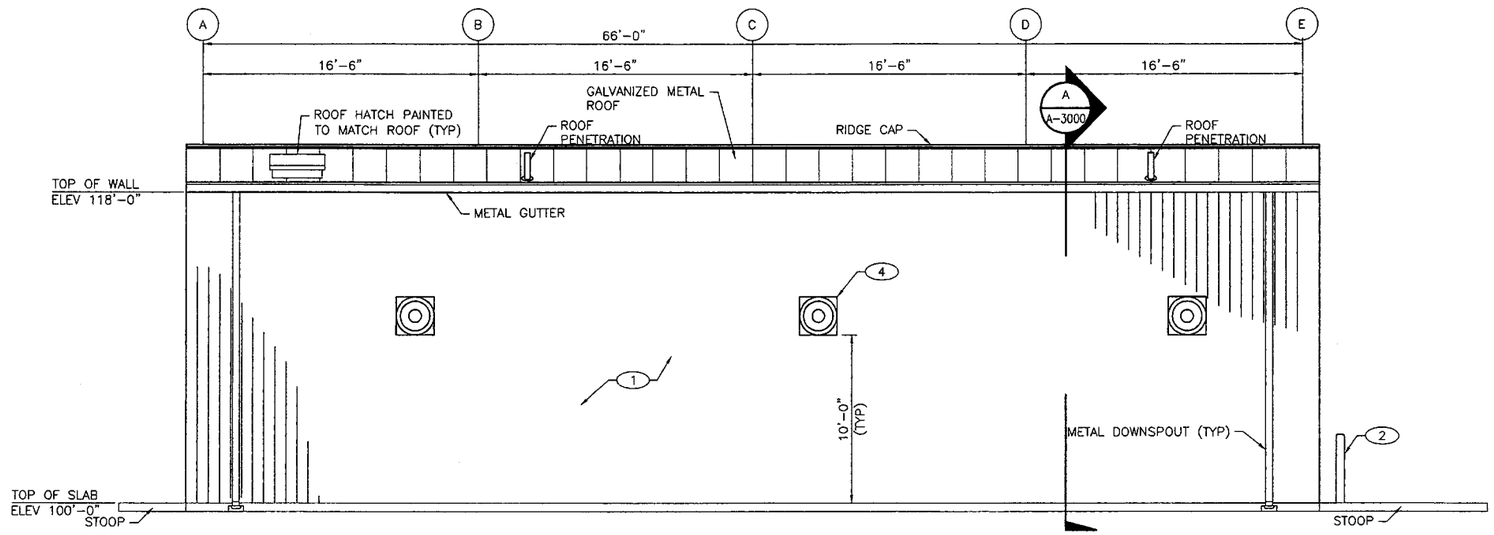

A A-1000 EAST ELEVATION

0' 1' 2' 4' 6' 8'
1/4"=1'-0"

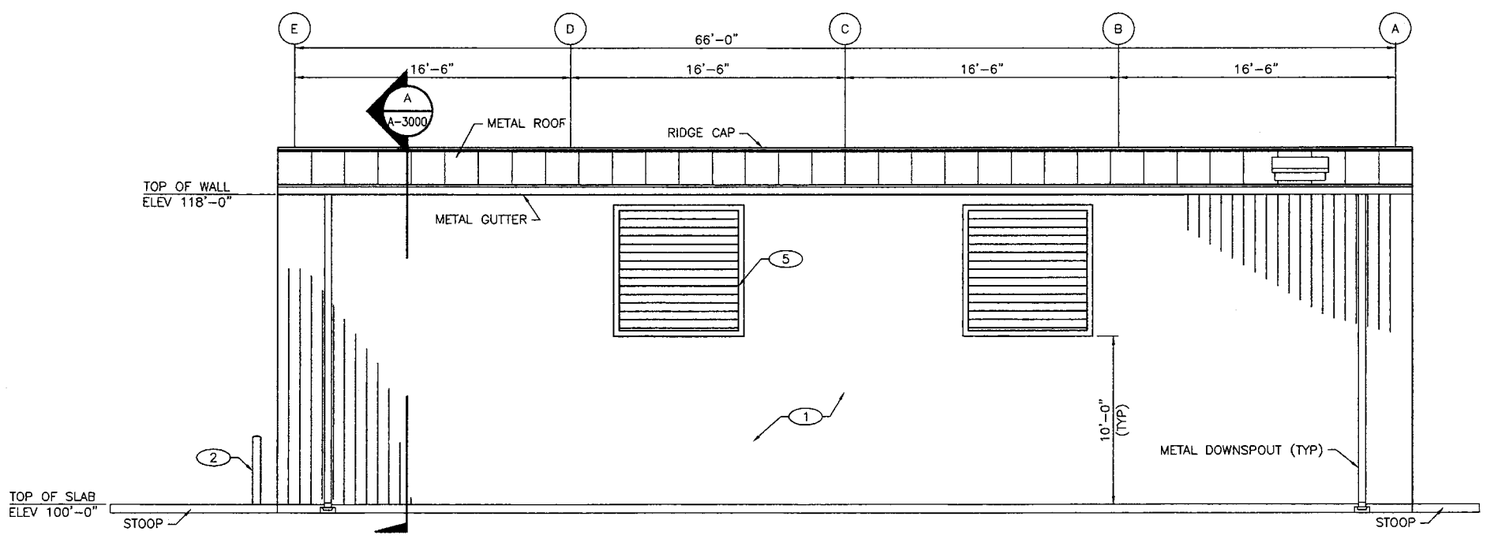

B A-1000 WEST ELEVATION

0' 1' 2' 4' 6' 8'
1/4"=1'-0"

KEYED NOTES:

1. EXTERIOR METAL PANEL SYSTEM
2. 6" DIAMETER CONCRETE FILLED STEEL BOLLARD, SEE STRUCTURAL DETAILS
3. OVERHEAD COILING DOOR, SEE DOOR SCHEDULE
4. WALL MOUNTED EXHAUST FANS, SEE MECHANICAL DETAILS
5. METAL WALL LOUVER, SEE MECHANICAL FLOOR PLAN

LANL BUILDING OFFICIAL
RA Lowe
105567
10-19-11
11-094
APPROVED

STATE OF NEW MEXICO
AJITH THOMAS
NO. 004455
REGISTERED ARCHITECT
9/22/11

NO	DATE	CLASS REV	DESCRIPTION	DWN	VER	CHKD	SUB	APP

HDR ENGINEERING INC.
2155 LOUISIANA BLVD., NE
SUITE 6000
ALBUQUERQUE, NM 87110
MAIN: (505) 830-6400 FAX: (505) 830-5454

SERF EXPANSION

ARCHITECTURAL BUILDING ELEVATIONS

BLDG. 3093 TA-03

DRAWN	B.S.	
DESIGN	A.T.	
CHECKED	W.W.	
DATE	09-22-11	

SUBMITTED

APPROVED FOR RELEASE

Los Alamos NATIONAL LABORATORY PO Box 1663 Los Alamos, New Mexico 87545

SHEET A-2001

31 OF 67

CLASSIFICATION UNCLASSIFIED REVIEWER DATE 10/7/11

PROJECT ID 102310

DRAWING NO C-55752

REV 0

ECN-11-TA-03-1398-0000-0265

C:\pwworking\phx\d0224119\102310-A-2001-R0.dwg, Sep 22, 2011 @ 2:05pm

ENV-RCRA-12-0059

ENCLOSURE 1

LAUR-12-10463

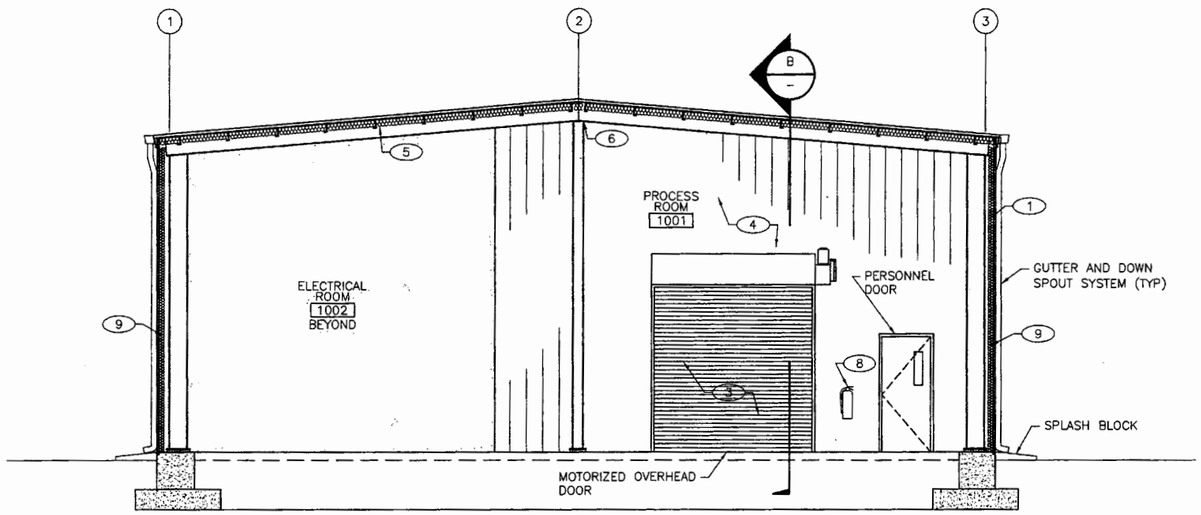

A / A-1001 SECTION

1/4"=1'-0"

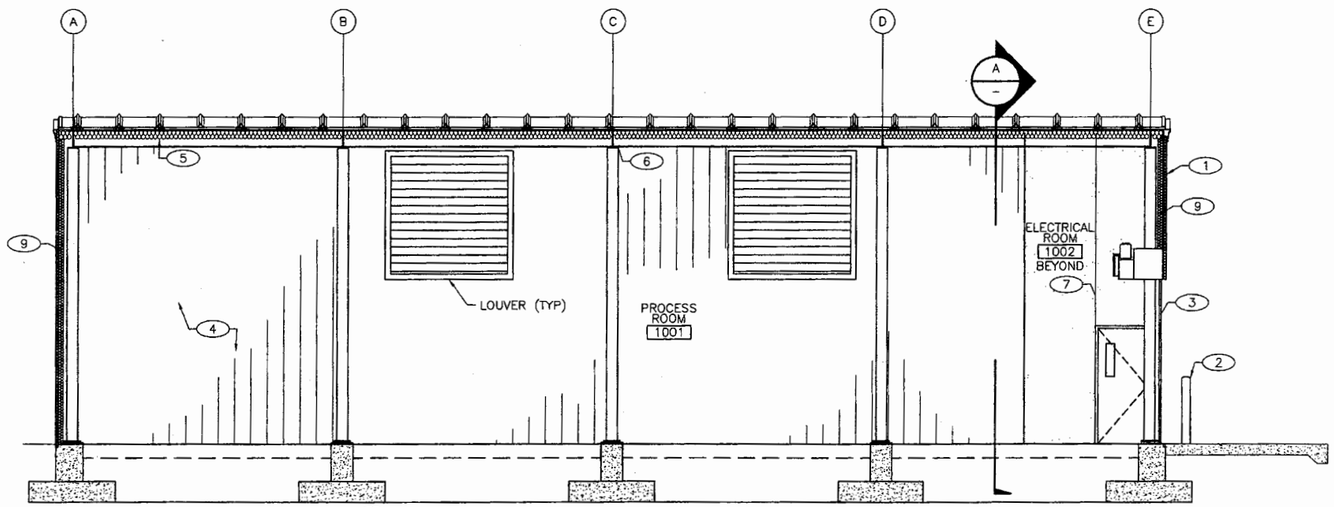

B / A-1001 SECTION

1/4"=1'-0"

GENERAL NOTES:

1. IF THIS SHEET IS NOT 24"X36", THEN IT IS A REDUCED SIZE PLOT. USE GRAPHIC SCALE ACCORDINGLY.
2. ALL SECONDARY STRUCTURAL FRAMING AND BUILDING SKIN IS BEING PROVIDED BY A BUILDING SUPPLIER IN ACCORDANCE WITH SPECIFICATION SECTION 13 3419. ALL SUPPORTING INFORMATION INCLUDING CALCULATIONS WILL BE PROVIDED BY THE BUILDING SUPPLIER AS A PART OF CONSTRUCTION SHOP DRAWING SUBMITTAL. ALL PREFABRICATED SECONDARY FRAMING SHALL BE DESIGNED BY A LICENSED PROFESSIONAL ENGINEER REGISTERED IN NEW MEXICO, SEE SPECIFICATIONS, SECTION 13 3419.

KEYED NOTES:

1. EXTERIOR METAL PANEL SYSTEM
2. 6" DIAMETER CONCRETE FILLED STEEL BOLLARD, SEE STRUCTURAL DETAILS
3. OVERHEAD COILING DOOR, SEE DOOR SCHEDULE
4. INTERIOR METAL LINER PANELS
5. R-30 VINYL FACED BATT INSULATION
6. REFER TO STRUCTURAL DRAWINGS FOR FRAMING DETALS
7. CONTROL JOINT, TYPICAL AT OUTSIDE CORNER OF HOLLOW METAL DOORS
8. BRACKET MOUNTED FIRE EXTINGUISHER

LANL BUILDING OFFICIAL APPROVED

STATE OF NEW MEXICO AJITH THOMAS NO. 004455 REGISTERED PROFESSIONAL ENGINEER

NO	DATE	CLASS REV	DESCRIPTION	DWN	VER	CHKD	SUB	APP

HDR ENGINEERING INC. 2155 LOUISIANA BLVD., NE SUITE 9500 ALBUQUERQUE, NM 87110 MAIN: (505) 830-6400 FAX: (505) 830-5454

SERF EXPANSION

ARCHITECTURAL BUILDING SECTIONS

BLDG. 3093 TA-03

DRAWN	B.S.	
DESIGN	A.T.	
CHECKED	W.W.	
DATE	09-22-11	

SUBMITTED APPROVED FOR RELEASE

Los Alamos NATIONAL LABORATORY PO Box 1663 Los Alamos, New Mexico 87545

SHEET A-3000 32 OF 67

CLASSIFICATION UNCLASSIFIED REVIEWER DATE 10/7/11

PROJECT ID 102310 DRAWING NO C-55752 REV 0

ECN-11-TA-03-1398-0000-0265

C:\pwworking\phx\d0224119\102310-A-3000-R0.dwg, Sep 22, 2011 @ 2:05pm

ENV-RCRA-12-0059

ENCLOSURE 1

LAUR-12-10463

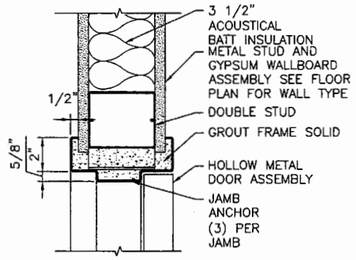

1 DOOR JAMB (HEAD SIMILAR)
SCALE: NONE

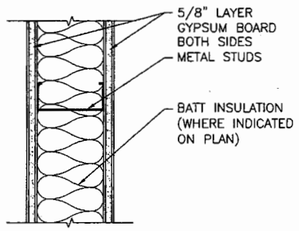

4 WALL TYPE A
SCALE: NONE

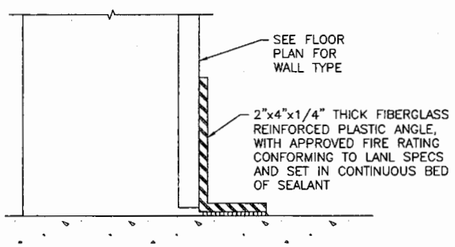

7 CONTAINMENT CURB
SCALE: NONE

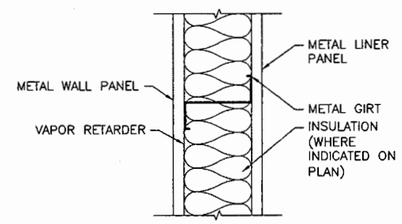

6 WALL TYPE C
SCALE: NONE

GENERAL NOTES:

1. PROVIDE 5/8" TYPE 'X' GYPSUM BOARD AT FIRE RATED WALL ASSEMBLIES. SEE CODE AND FLOOR PLANS FOR SCOPE OF FIRE RATED WALLS.
2. INSTALL FIRE RATED WALLS CONTINUOUS TO FORM REQUIRED SEPARATION ASSEMBLY.
3. DIAGONALLY BRACE WALLS THAT EXTEND 6" ABOVE THE CEILING. SEE DETAIL 4.
4. WALLS INDICATED WITH ACOUSTICAL INSULATION SHALL MEET OR EXCEED AN STC RATING OF 48, UNLESS OTHERWISE INDICATED, WITH SPECIFICATIONS SECTION 09260, GYPSUM BOARD ASSEMBLIES.
5. ALL SECONDARY STRUCTURAL FRAMING AND BUILDING SKIN IS BEING PROVIDED BY A BUILDING SUPPLIER IN ACCORDANCE WITH SPECIFICATION SECTION 13 3419. ALL SUPPORTING INFORMATION INCLUDING CALCULATIONS WILL BE PROVIDED BY THE BUILDING SUPPLIER AS A PART OF CONSTRUCTION SHOP DRAWING SUBMITTAL.

WALL TYPE SYMBOL:

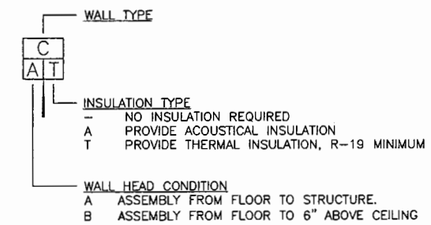

NO	DATE	CLASS REV	DESCRIPTION	DWN	VER	CHKD	SUB	APP

HDR ENGINEERING INC.
5155 LOUISIANA BLVD., NE
SUITE 9500
ALBUQUERQUE, NM 87110
MAIN: (505) 830-5400 FAX: (505) 830-5454

SERF EXPANSION

ARCHITECTURAL STANDARD DETAILS

BLDG. 3093 TA-03

DRAWN	B.S.
DESIGN	A.T.
CHECKED	W.W.
DATE	09-22-11

SUBMITTED

APPROVED FOR RELEASE

Los Alamos NATIONAL LABORATORY PO Box 1663 Los Alamos, New Mexico, 87545

SHEET A-5000

33 OF 67

CLASSIFICATION UNCLASSIFIED

DATE 10/17/11

PROJECT ID 102310

DRAWING NO C-55752

REV 0

LANL BUILDING OFFICIAL
RA Trout
10-19-11
11-094
APPROVED

STATE OF NEW MEXICO
AJITH THOMAS
NO. 004455
REGISTERED ARCHITECT
9/22/11

ECN-11-TA-03-1398-0000-0265

C:\pwworking\phx\d0224119\102310-A-5000-R0.dwg, Sep 22, 2011 @ 3:29pm

ENV-RCRA-12-0059 ENCLOSURE 1 LAUR-12-10463

ROOM FINISH SCHEDULE

ROOM NUMBER	ROOM NAME	IBC GROUP	INTERIOR FINISHES: FLOOR MAT'L	FLOOR FINISH	BASE MAT'L	BASE FINISH	CEILING MAT'L	CEILING FINISH	CEILING HEIGHT	NORTH MAT'L	NORTH FINISH	EAST MAT'L	EAST FINISH	SOUTH MAT'L	SOUTH FINISH	WEST MAT'L	WEST FINISH	REMARKS –
1001	PROCESS ROOM	F1	C	P	–	FG	ES	ES	~18 FT	G/M	P/FAC	M	P/FAC	M	FAC	G/M	P/FAC	–
1002	ELECTRICAL ROOM	F1	C	P	G	RB	ES	ES	~18 FT	G	P	G	P	G	P	G	P	–

SEE ROOM FINISH SCHEDULE ABBREVIATIONS AT RIGHT

ROOM FINISH SCHEDULE ABBREVIATIONS

C	CONCRETE
ES	EXPOSED STRUCTURE
F1	MODERATE HAZARD INDUSTRIAL OCCUPANCY
FAC	FACTORY FINISH
FG	FIBERGLASS CURB
G	GYPSUM WALLBOARD
H7	HIGH HAZARD (HEALTH) OCCUPANCY
M	METAL LINER PANEL, SEE SPECIFICATION 13 3419 – PRE-ENGINEERED METAL BUILDING
P	PAINT SYSTEM – SEE SPECIFICATION SECTION 09900 – PAINTING
RB	RESILIENT BASE

HARDWARE GROUPS:

SEE SPECIFICATION SECTION 13 3419 – METAL BUILDING

KEYED NOTES:

1. PER MANUFACTURER'S STANDARD INSTALLATION PRACTICE.

DOOR SCHEDULE

MARK	SIZE DOOR	DOOR TYPE	DOOR MAT'L	FRAME MAT'L	FRAME TYPE	GROUP HARDWARE	DETAILS HEAD	DETAILS JAMB	DETAILS SILL	REMARKS
1001A	3'–0"x7'–0"x1¾"	N	HM	HM	D	#3	1	1		
1001B	12'–0"x10'–0"	OHC	STL	STL	D	#6	1	1		MOTORIZED
1001C	3'–0"x7'–0"x1¾"	N	HM	HM	D	#3	1	1		
1002A	3'–0"x7'–0"x1¾"	N	HM	HM	D	#1	1*	1*		* SEE DWG-5000

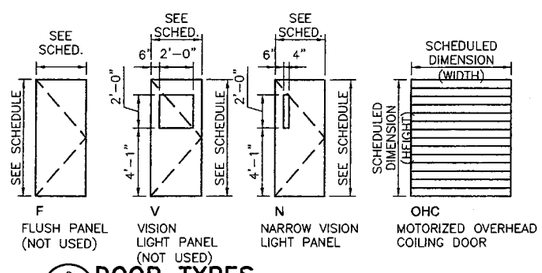

6 / – DOOR TYPES
SCALE: NONE

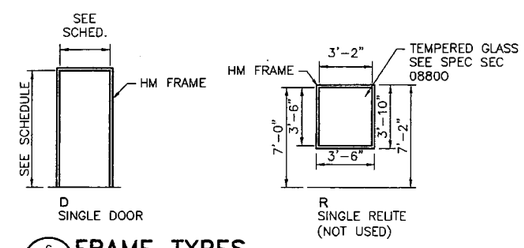

6 / – FRAME TYPES
SCALE: NONE

LANL BUILDING OFFICIAL
NO. 105567
DATE 10-19-11
APPROVED
REVIEWED FOR LANL STANDARDS COMPLIANCE PER ISD 341-2 CH 18

STATE OF NEW MEXICO
AJITH THOMAS
NO. 10445
REGISTERED ARCHITECT
9/22/11

NO	DATE	CLASS REV	DESCRIPTION	DWN	VER	CHKD	SUB	APP

HDR ENGINEERING INC.
2155 LOUISIANA BLVD., NE
SUITE 9500
ALBUQUERQUE, NM 87110
MAIN: (505) 830-8400 FAX:
(505) 830-8454

SERF EXPANSION

ARCHITECTURAL SCHEDULES AND DETAILS

BLDG. 3093 TA-03

DRAWN	B.S.
DESIGN	A.T.
CHECKED	W.W.
DATE	09-22-11

SUBMITTED
APPROVED FOR RELEASE

Los Alamos NATIONAL LABORATORY PO Box 1663 Los Alamos, New Mexico 87545

SHEET A-7000
34 OF 67

CLASSIFICATION UNCLASSIFIED REVIEWER DATE 10/19/11
PROJECT ID 102310 DRAWING NO C-55752 REV 0

ECN-11-TA-03-1398-0000-0265

C:\pwworking\phx\d0224119\102310-A-7000-R0.dwg, Sep 22, 2011 @ 2:05pm

ENV-RCRA-12-0059

ENCLOSURE 3

LAUR-12-10463

SANITARY EFFLUENT RECLAMATION FACILITY (SERF) EXPANSION PROJECT

DESIGN BUILD DELIVERY
ISSUED FOR CONSTRUCTION
JANUARY 16, 2012

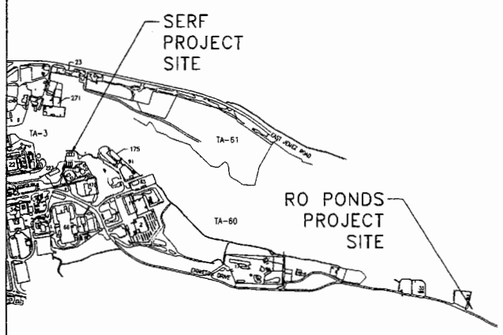

LOCATION PLAN
SCALE: NONE

LIST OF DRAWINGS

REVISION NUMBER	SHEET NUMBER	DISCIPLINE/SHEET NUMBER	DRAWING TITLE
1	1	G-0001	COVER SHEET/INDEX
1	2	C-0001	GENERAL NOTES
1	3	C-0002	LEGEND AND ABBREVIATIONS
1	4	C-1000	OVERALL SITE/SURVEY
1	5	C-1001	SERF SITE AND PIPING PLAN
1	6	C-1002	SERF GRADING PLAN
1	7	C-1003	RO REJECT EVAP PONDS SITE AND PIPING PLAN
1	8	C-1004	RO REJECT EVAP PONDS GRADING PLAN
1	9	C-1005	SERF PLAN AND PROFILE
1	10	C-3000	RO REJECT EVAP PONDS SECTIONS
1	11	C-3001	RO REJECT EVAP PONDS DETAIL SECTIONS
1	12	C-5000	PIPING DETAILS
1	13	C-5001	MISCELLANEOUS DETAILS
2	14	S-0001	GENERAL NOTES
2	15	S-1000	SERF FOUNDATION PLAN
2	16	S-1001	SERF FRAMING PLAN
1	17	S-1002	400,000 GAL STORAGE TANK PLAN
2	18	S-3000	SERF FOUNDATION SECTIONS AND DETAILS
1	19	S-3001	SERF FRAMING SECTIONS AND DETAILS
2	20	S-3002	SERF FRAMING SECTIONS AND DETAILS
2	21	S-4000	SERF BUILDING SECTIONS
2	22	S-4001	SERF BUILDING SECTIONS
1	23	S-4002	400,000 GAL STORAGE TANK SECTION AND DETAIL
1	24	S-5000	STANDARD DETAILS
1	25	S-5001	STANDARD DETAILS
1	26	A-0001	LEGEND AND ABBREVIATIONS
1	27	A-1000	ARCHITECTURAL CODE DATA AND LIFE SAFETY PLAN
1	28	A-1001	ARCHITECTURAL FLOOR PLAN
1	29	A-1002	ARCHITECTURAL ROOF PLAN
1	30	A-2000	ARCHITECTURAL BUILDING ELEVATIONS
1	31	A-2001	ARCHITECTURAL BUILDING ELEVATIONS
1	32	A-3000	ARCHITECTURAL BUILDING SECTIONS
1	33	A-5000	ARCHITECTURAL DETAILS
1	34	A-7000	ARCHITECTURAL SCHEDULES AND DETAILS
0	35	P-0001	PLUMBING LEGEND AND ABBREVIATIONS
1	36	P-1000	SERF PLUMBING PLAN
0	37	P-5000	STANDARD DETAILS
0	38	P-7000	PLUMBING SCHEDULES

REVISION NUMBER	SHEET NUMBER	DISCIPLINE/SHEET NUMBER	DRAWING TITLE
1	39	D-1000	EXISTING SERF BUILDING GENERAL PROCESS EQUIPMENT ARRANGEMENT PLAN
1	40	D-1001	SERF BUILDING GENERAL PROCESS EQUIPMENT ARRANGEMENT PLAN
1	41	D-1002	PUMP STATION PLAN AND SECTION
0	42	D-3000	SERF BUILDING PROCESS SECTIONS
0	43	M-0001	MECHANICAL LEGEND
1	44	M-1000	SERF BUILDING HVAC PLAN
1	45	M-5000	STANDARD DETAILS
0	46	M-7000	MECHANICAL EQUIPMENT SCHEDULES
0	47	E-0001	ELECTRICAL LEGEND
1	48	E-1000	EXISTING SERF BUILDING ELECTRICAL PLAN
1	49	E-1001	SERF BUILDING ELECTRICAL SITE PLAN
1	50	E-1002	SERF BUILDING GROUNDING PLAN
1	51	E-1003	SERF BUILDING LIGHTNING PROTECTION PLAN
1	52	E-1004	SERF BUILDING POWER PLAN
1	53	E-1005	SERF BUILDING LIGHTING PLAN
1	54	E-1006	SERF BUILDING SPECIAL SYSTEMS PLAN
1	55	E-1007	40,000 GALLON TANK POWER PLAN
1	56	E-1008	BLOWDOWN PUMP STATION SITE PLAN
1	57	E-1009	BLOWDOWN PUMP STATION POWER PLAN
0	58	E-5000	STANDARD DETAILS
0	59	E-5001	STANDARD DETAILS
0	60	E-6000	FIRE ALARM RISER DIAGRAM
0	61	E-6001	GROUNDING SYSTEM DIAGRAM
1	62	E-6002	EXISTING SERF BUILDING ONE-LINE MODIFICATIONS
0	63	E-6003	ONE-LINE SWB-B
1	64	E-6004	ONE-LINE MCC-B
0	65	E-6005	ONE-LINE BLOWDOWN PUMP STATION
1	66	E-6006	PANELBOARD SCHEDULES
1	67	E-6007	SCADA CONFIGURATION
1	68	E-6008	PLC ONE-LINE DIAGRAM
1	69	E-6009	PLC ONE-LINE DIAGRAM
1	70	E-6010	CONTROL SCHEMATICS
1	71	E-6011	CONTROL SCHEMATICS
1	72	E-7000	LIGHTING FIXTURE SCHEDULE

SUPPLEMENTAL DRAWING FROM WESTERN STATES FIRE PROTECTION COMPANY FOR REFERENCE	FIRE SPRINKLER SYSTEM (DRAWING 1 OF 1)
SUPPLEMENTAL DRAWINGS FROM SIEMENS FOR REFERENCE	P&ID'S (DRAWINGS 1-30)
SUPPLEMENTAL DRAWINGS FROM SIEMENS FOR REFERENCE	PFD'S (DRAWINGS 1-5)

DRAWINGS APPROVED BY LBO NOT SUBMITTED WITH THIS PACKAGE.

DRAWINGS SUBMITTED FOR APPROVAL FROM LBO.

REFERENCE DRAWINGS NOT SUBMITTED WITH THIS PACKAGE.

LANL BUILDING OFFICIAL APPROVED
BY RA Hall
ID 105567
DATE 1-26-12
LANL# 12-908
REVIEWED FOR LANL STANDARDS COMPLIANCE PER ISO 341 - 2, CH. 16

CHRIS RODRIGUEZ NEW MEXICO 16239 LICENSED PROFESSIONAL ENGINEER 9/22/11

NO	DATE	CLASS REV	DESCRIPTION	DWN	VER	CHKD	SUB	APP
1	11/10/11	UNCLASSIFIED	TOTAL SHEET NUMBER	BF	CR	–	–	–

HDR ENGINEERING INC.
2155 LOUISIANA BLVD., NE
SUITE 9000
ALBUQUERQUE, NM 87110
MAIN: (505) 830-5400 FAX: (505) 830-5454

SERF EXPANSION

COVER SHEET/INDEX

BLDG. — TA-03

DRAWN	HDR
DESIGN	HDR
CHECKED	HDR
DATE	10-24-11

SUBMITTED

APPROVED FOR RELEASE

Los Alamos NATIONAL LABORATORY PO Box 1663 Los Alamos, New Mexico 87545

SHEET G-0001

1 OF 72

CLASSIFICATION UNCLASSIFIED

DATE 1/25/2012

PROJECT ID 102310

DRAWING NO C-55752

REV 1

ECN-11-TA-03-1398-0000-0265

C:\pwworking\phx\d0224114\102310-G-0001-R1.dwg, Jan 16, 2012 @ 12:02pm

FILE NO.	SYMBOL	DESCRIPTION
PL001		*FD – FLOOR DRAIN *FS – FLOOR SINK *RD – ROOF DRAIN
PL002		BALL VALVE
PL003		BUTTERFLY VALVE
PL004		CHECK VALVE
PL005		CONTROL VALVE (TWO WAY)
PL006		CONTROL VALVE (3–WAY)
PL007		DIAPHRAM VALVE
PL008		GATE VALVE
PL009		GATE VALVE (ANGLE)
PL010		GATE VALVE (OS & Y)
PL011		GLOBE VALVE
PL012		GLOBE VALVE (ANGLE)
PL013		HOSE BIBB W/VAC BREAKER
PL014		NEEDLE VALVE
PL015		PLUG VALVE COCK
PL016		PRESSURE REDUCING VALVE
PL017		RELIEF OR SAFETY VALVE
PL018	S	SOLENOID VALVE
PL019	AA	EP – ELECTRIC–PNEUMATIC SWITCH PE – PNEUMATIC–ELECTRIC SWITCH SP – DUCT STATIC PRESSURE SENSOR FS – FLOW SWITCH FT – WATER FLOW SENSOR/ TRANSMITTER TT – TEMPERATURE SENSOR/ TRANSMITTER PS – PRESSURE SWITCH PT – PRESSURE SENSOR/ TRANSMITTER TS – TAMPER SWITCH
PL020	AAAA	OTHER TYPE OF SWITCH MORE THAN TWO LETTERS
PL021	AAAA 0000	OTHER TYPE SWITCH (MORE THAN TWO LETTERS WITH NUMERICAL TAG)
PL022	AA	T – THERMOSTAT H – HUMIDISTAT HS – HUMIDITY SENSOR PS – PRESSURE SENSOR TS – TEMPERATURE SENSOR
PL023	AAAA	OTHER TYPE SENSOR (MORE) THAN TWO LETTERS)
PL024	AAAA 0000	OTHER TYPE SENSOR (MORE THAN TWO LETTERS WITH NUMERICAL TAG)
PL025		AUTOMATIC AIR VENT
PL026		MANUAL AIR VENT

FILE NO.	SYMBOL	DESCRIPTION
PL027	BFP	BACKFLOW PREVENTER
PL028	FCO	FLOOR CLEANOUT
PL029	DCO	DOUBLE CLEAN OUT
PL030	WCO	WALL CLEAN OUT
PL031	CO	END OF PIPE CLEAN OUT
PL032		EXPANSION JOINT
PL033		EXPANSION LOOP
PL034		FLEXIBLE PIPE CONNECTION
PL035		PIPE ANCHOR
PL036		PRESSURE GAUGE WITH VALVE
PL037		STEAM TRAP
PL038		STRAINER
PL039		STRAINER W/BLOW–OFF VALVE
PL040		THERMOMETER
PL041		TEST PLUG (PRESS/TEMP)
PL042		TEMP GAUGE WITH VALVE
PL043	M	METER
PL044	CO2	CARBON DIOXIDE SUPPRESSION SYSTEM
PL045		CAP ON END OF PIPE
PL046		FLEXIBLE MECHANICAL COUPLING
PL047		RIGID MECHANICAL COUPLING
PL048		ELBOW – TURNED UP
PL049		ELBOW – TURNED DOWN
PL050		FLANGE CONNECTION
PL051		REDUCER – CONCENTRIC
PL052		REDUCER – ECCENTRIC – BOTTOM OF PIPE LEVEL
PL053		REDUCER – ECCENTRIC – TOP OF PIPE LEVEL
PL054		TEE – OUTLET UP
PL055		TEE – OUTLET DOWN
PL056		UNION
PL057		FLANGED UNION
PL058		NOT USED
PL059		DIRECTION OF FLOW
PL060		PITCH PIPING DOWN
PL061	1	PLUMBING EQUIPMENT DESIGNATION
PL062		GAS PLUG
PL063		BALANCING VALVE
		WALL HYDRANT

FILE NO.	SYMBOL	DESCRIPTION
PL064 TO PL099		NOT USED

PIPING SYSTEM ACRONYMS

—xx—

AC	ACETYLENE
AR	ARGON GAS
BA	BREATHING AIR
CA	COMPRESSED AIR
CONH	CONDENSATE HI
CONL	CONDENSATE LO
CONP	CONDENSATE PUMPED
CS	CHEMICAL SUPPLY
CWR	CHILLED WATER RETURN
CWS	CHILLED WATER SUPPLY
DIWR	DEIONIZED WATER RETURN
DIWS	DEIONIZED WATER SUPPLY
DIWD	DEIONIZED WATER DRAIN
FOR	FUEL OIL RETURN
FOS	FUEL OIL SUPPLY
FOV	FUEL OIL VENT
H2	HYDROGEN GAS
HE	HELIUM GAS
HWR	HEATING WATER RETURN
HWS	HEATING WATER SUPPLY
LN	LIQUID NITROGEN
N2	NITROGEN
NGM	NATURAL GAS–MEDIUM
NGL	NATUAL GAS–LOW
NPWC	NON–POTABLE WATER COLD
NPWH	NON–POTABLE WATER HOT
NPWHR	NON–POTABLE WATER HOT RECIRCULATION
NPMU	NON–POTABLE WATER MAKE–UP
O2	OXYGEN
PCW	PROCESS COOLING WATER
PLWH	PROCESS LIQUID WASTE HAZARDOUS
PLWHN	PROCESS LIQUID WASTE NON–HAZARDOUS
PWC	POTABLE WATER COLD
PWH	POTABLE WATER HOT
PWHR	POTABLE WATER HOT RECIRCULATION
RLW	RADIOACTIVE LIQUID WASTE
RLWV	RADIOACTIVE LIQUID WASTE VENT
SPD	SUMP PUMP DISCHARGE
SS	SANITARY SEWER
SW	SANITARY WASTE
SWV	SANITARY WASTE VENT
SWTE	SANITARY WASTE WATER TREATED EFFLUENT
STMHP	STEAM HI PRESSURE
STMLP	STEAM LOW PRESSURE
STS	STORM SEWER
STW	STORM WATER
TWS	TOWER WATER (SUPPLY)
TWR	TOWER WATER (RETURN)
VAC	VACUUM
VACPD	VACUUM PUMP DISCHARGE
VTR	VENT THROUGH ROOF

------VT----- VENT (VT)

— — — — POTABLE WATER, COLD (PWC)

———— POTABLE WATER, HOT (PWH)

------SS----- SANITARY SEWER

LANL BUILDING OFFICIAL
NO. 105567
DATE 12-26-12
APPROVED

REVIEWED FOR LANL STANDARDS COMPLIANCE PER ES 347 - 2 CH 18

BRIAN C. ALLERMEIGER
NO. 16175
PROFESSIONAL ENGINEER
11-8-11

NO	DATE	CLASS REV	DESCRIPTION	DWN	VER	CHKD	SUB	APP

HDR ENGINEERING INC.
2155 LOUISIANA BLVD., NE
SUITE 3500
ALBUQUERQUE, NM 87110
MAIN: (505) 830-5400 FAX: (505) 830-0454

SERF EXPANSION

PLUMBING LEGEND AND ABBREVIATIONS

BLDG. 3093 TA-03

DRAWN	S.G.
DESIGN	B.A.
CHECKED	J.L.
DATE	11-10-11

SUBMITTED

APPROVED FOR RELEASE

Los Alamos NATIONAL LABORATORY
PO Box 1663
Los Alamos, New Mexico 87545

SHEET P-0001
35 OF 72

CLASSIFICATION UNCLASSIFIED
OWNER
DATE 12/5/2012

PROJECT ID 102310
DRAWING NO C-55752
REV 0

ECN-11-TA-03-1398-0000-0265

C:\pwworking\phx\d0224123\102310-P-0001-R0.dwg, Jan 16, 2012 @ 8:30am

ENV-RCRA-12-0059

ENCLOSURE 3

LAUR-12-10463

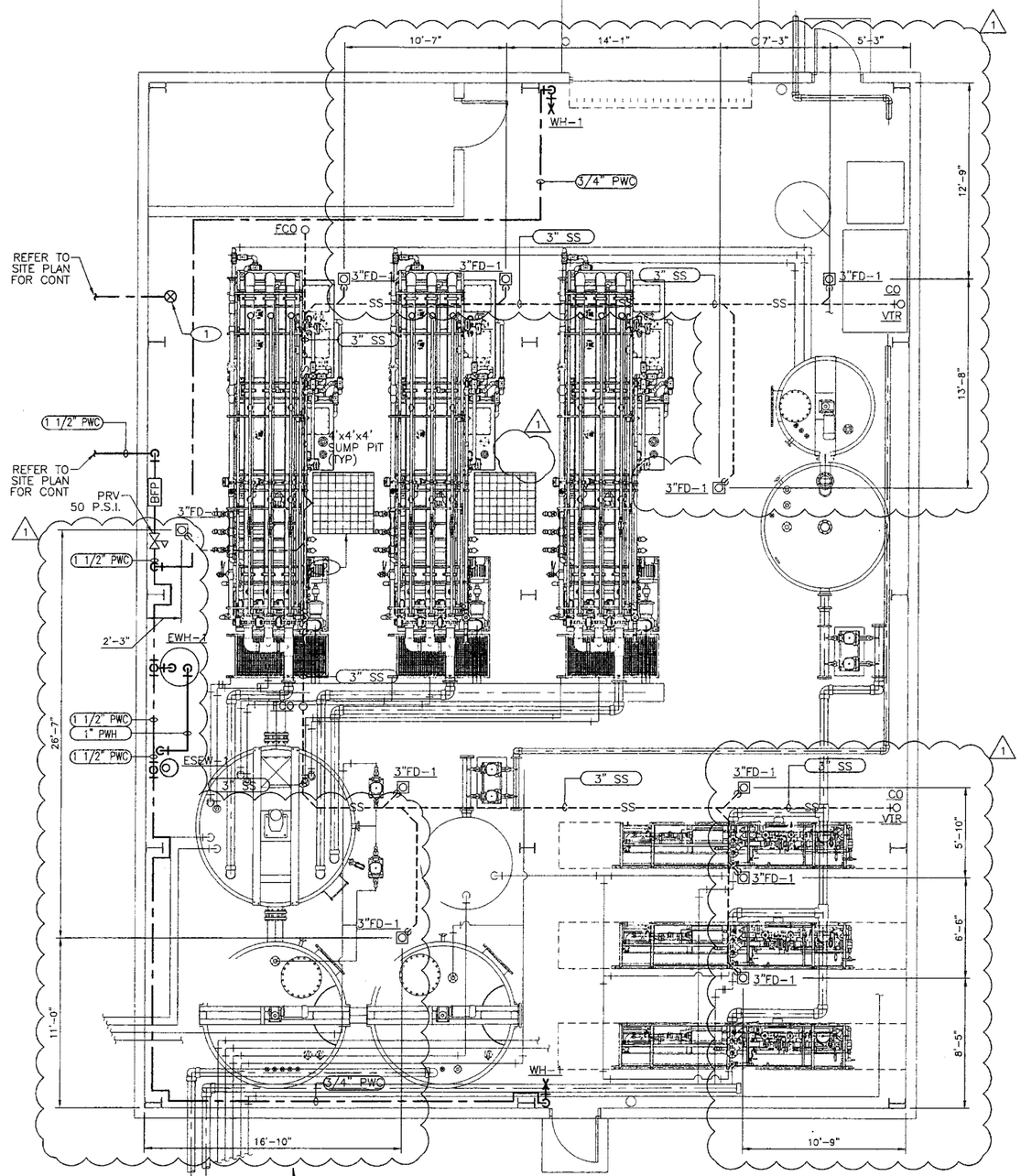

FLOOR PLAN – PLUMBING

1/4"=1'-0"

GENERAL NOTES:

1. IF THIS SHEET IS NOT 24"X36", THEN IT IS A REDUCED SIZE PLOT. USE GRAPHIC SCALE ACCORDINGLY.
2. CONTRACTOR SHALL LOCATE ALL MECHANICAL EQUIPMENT, DUCTWORK, CONTROLS, ETC. IN ACCORDANCE WITH NEC REQUIREMENTS.
3. CONTRACTOR IS RESPONSIBLE FOR COORDINATING ALL MECHANICAL WORK WITH OTHER DISCIPLINES AND MEETING ALL ACCESSIBILITY, CLEARANCE, AND CODE REQUIREMENTS.
4. IT IS THE RESPONSIBILITY OF THE CONTRACTOR TO IDENTIFY ANY DISCREPANCIES OR CONFLICTS AND BRING IT TO THE ATTENTION OF THE ENGINEER
5. ANY DIMENSIONS SHOWN ARE APPROXIMATE. CONTRACTOR TO FIELD MODIFY LOCATION OF ALL MECHANICAL AND PLUMBING INFRASTRUCTURE COMPONENTS/FIXTURES INCLUDING BUT NOT LIMITED TO PIPING, DRAINS, AND EQUIPMENT AS NEEDED TO COORDINATE WITH INSTALLATION OF OTHER PROJECT ELEMENTS.

KEYED NOTES:

1. FIRE RISER. MAINTAIN MINIMUM CLEARANCES. SEE DETAIL 2/P-5000. FIRE SUPPRESSION SYSTEM TO BE SUPPLIED AND DESIGNED BY OTHERS AND SUPPORTING DOCUMENTATION WILL BE PROVIDED AS A CONSTRUCTION SUBMITTAL. SEE LANL SPECIFICATION 21 1313. REFER TO SHEET FP-0001 PRELIMINARY FIRE SPRINKLER SYSTEM PLAN PROVIDED BY WESTERN STATES FIRE PROTECTION COMPANY. DETAILED INFORMATION WILL BE PROVIDED AS CONSTRUCTION SUBMITTAL.
2. SUMP PIT WILL BE EQUIPPED WITH A SUBMERSIBLE PUMP AND CONTROLS BASED ON PENDING RFI. DISCHARGE WILL BE ROUTED TO REACTION TANK 1 VIA HOSE ATTACHMENT.

NO	DATE	CLASS REV	DESCRIPTION	DWN	VER	CHKD	SUB	APP
1	12/7/11		LANL REVIEW COORDINATION UPDATE	BF	–	–	–	–

HDR ENGINEERING INC.
2155 LOUISIANA BLVD., NE
SUITE 9500
ALBUQUERQUE, NM 87110
MAIN: (505) 830-5400 FAX:
(505) 830-5454

SERF EXPANSION

SERF BUILDING
PLUMBING PLAN

BLDG. 3093 TA-03

DRAWN	S.G.
DESIGN	B.
CHECKED	J.
DATE	11-10-11

SUBMITTED

APPROVED FOR RELEASE

Los Alamos NATIONAL LABORATORY
PO Box 1663
Los Alamos, New Mexico 87545

SHEET P-1000

36 OF 72

CLASSIFICATION UNCLASSIFIED

DATE 1/25/2012

PROJECT ID 102310

DRAWING NO C-55752

REV 1

LANL BUILDING OFFICIAL APPROVED
105567
1-26-12
12-008

BRIAN C. ALLENBRIGHT PROFESSIONAL ENGINEER 15175
11-10-11

ECN-11-TA-03-1398-0000-0265

C:\pwworking\phx\d0224123\102310-P-1000-R1.dwg, Jan 16, 2012 @ 8:31am

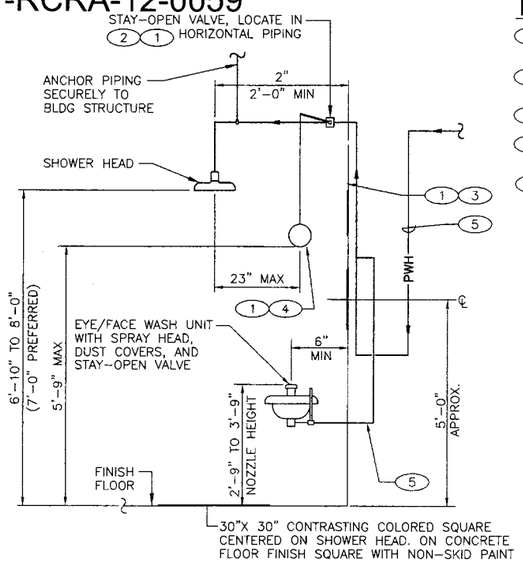

KEYED NOTES:

1. FURNISHED WITH EMERGENCY EQUIPMENT.
2. VALVE TO BE ACCESSIBLE FOR MAINTENANCE.
3. EMERGENCY SIGN(S).
4. LOCATE PULL ROD AS CLOSE TO WALL AS POSSIBLE.
5. TEPID WATER SUPPLY.

1 SAFETY SHOWER WITH EYEWASH DETAIL

SCALE: NONE

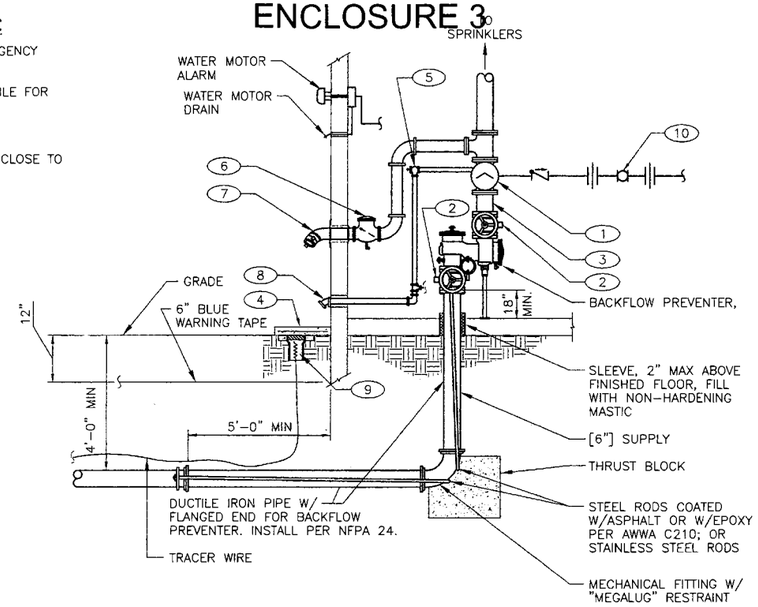

KEYED NOTES:

1. ALARM CHECK VALVE WITH COMPLETE UL LISTED TRIM PER SPECIFICATION.
2. TAMPER SWITCH.
3. 6" LONG SPOOL PIECE.
4. CONCRETE SPLASH BLOCK.
5. 2" MAIN DRAIN ANGLE VALVE.
6. 4" CHECK VALVE WITH 1/2" BALL DRIP.
7. FIRE DEPARTMENT CONNECTION.
8. 2" MAIN DRAIN WITH 45° ELBOW TURN DOWN.
9. TRACER WIRE TEST STATION (NOT UNDER SPLASH BLOCK).
10. ALARM SHUTOFF VALVE WITH TAMPER SWITCH.

2 SPRINKLER SYSTEM RISER DETAIL

SCALE: NONE

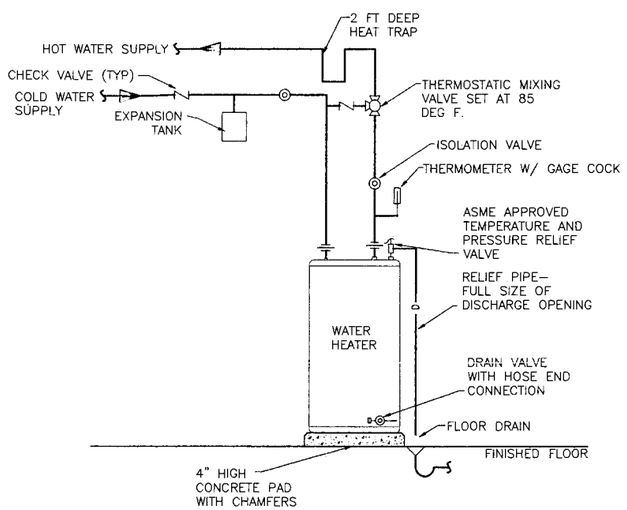

3 ELECTRIC WATER HEATER DETAIL

SCALE: NONE

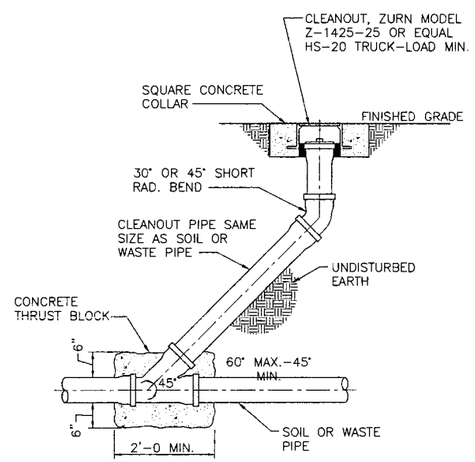

NOTE:
1. INSTALL LONG SWEEP SANITARY 90 DEGREE ELBOW IF CLEANOUT LOCATED AT END OF PIPE RUN.

4 CLEANOUT AT GRADE DETAIL

SCALE: NONE

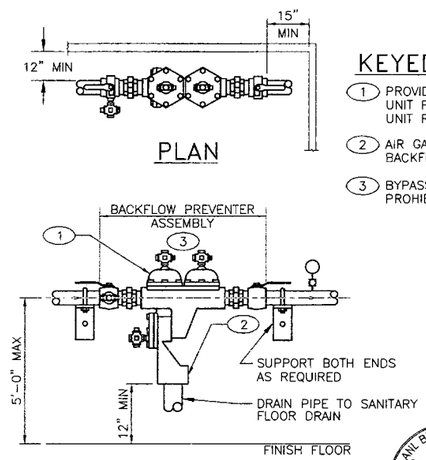

KEYED NOTES:

1. PROVIDE ADEQUATE CLEARANCE ABOVE UNIT FOR OPERATION OF VALVES OR UNIT REPAIR.
2. AIR GAP FITTING FURNISHED WITH BACKFLOW PREVENTER.
3. BYPASS PIPING AROUND BFP IS PROHIBITED.

5 BACKFLOW PREVENTER DETAIL

SCALE: NONE

LANL BUILDING OFFICIAL
SIGN Mark
ID 105567
DATE 12-26-12
NOTE 12-008
APPROVED
REVIEWED FOR LANL STANDARDS COMPLIANCE PER SD 341-2, CH 18

BRIAN C. ALLENBELIGEN
NEW MEXICO
15175
PROFESSIONAL ENGINEER
11-10-11

NO	DATE	CLASS REV	DESCRIPTION	DWN	VER	CHKD	SUB	APP

HDR ENGINEERING INC.
2155 LOUISIANA BLVD., NE
SUITE 5500
ALBUQUERQUE, NM 87110
MAIN: (505) 830-5400 FAX: (505) 830-5454

SERF EXPANSION

PLUMBING STANDARD DETAILS

BLDG. 3093 TA-03

DRAWN	S.C.
DESIGN	B.A.
CHECKED	J.K.
DATE	11-10-11

SUBMITTED

APPROVED FOR RELEASE

Los Alamos NATIONAL LABORATORY
PO Box 1663
Los Alamos, New Mexico 87545

SHEET P-5000

37 OF 72

CLASSIFICATION UNCLASSIFIED REVIEWER DATE 1/25/2012

PROJECT ID 102310

DRAWING NO C-55752

REV 0

ECN-11-TA-03-1398-0000-0265

C:\pnworking\phx\d0224123\102310-P-5000-R0.dwg, Jan 16, 2012 @ 8:31am

PLUMBING FIXTURE SCHEDULE

MARK	DESCRIPTION	SIZE OF CONNECTION					DESCRIPTION
		TRAP	SS	SWV	PCW	PHW	
ESEW-1	EMERGENCY SHOWER/EYE WASH	-	-	-	-	1-1/4"	HAWS NO. 8309WC. BARRIER FREE EMERGENCY SHOWER AND EYE /FACE WASH. UNIT COMPLETE WITH ALL REQUIRED COMPONENTS
FD-1	FLOOR DRAIN	3"	3"	2"	-	-	J.R. SMITH NO. 2010C-A. CST IRON BODY WITH 6" DIAMETER TYPE "A" NICKEL BRONZE STRAINER. 4" DEEP SEAL C.I. P-TRAP. TRAP PRIMER CONNECTION.
WH-1	WALL HYDRANT	-	-	-	3/4"	-	ZURN NO. Z-1300 ECOLOTROL WALL HYDRANT, ENCASED, NON FREEZE, ANTI-SIPHON AND AUTOMATIC DRAIN

WATER HEATER SCHEDULE

MARK	LOCATION	CAPACITY			HEATING MEDIA DATA		STORAGE TANK		BASIS OF DESIGN	NOTES
		DEG F RISE	RECOVERY GPH	L W T (DEG F)	ELECTRIC KW	ELECTRIC V/PH	CAPICITY GAL	LINING		
EWH-1	PROCESS ROOM	45	20	170	6	480/3	120	HYDRASTONE CEMENT LINED STEEL	HUBBELL EMV120	1,2,3,4

NOTES:
1. PROVIDE LOW TEMPERATURE ALARM DRY CONTACTS
2. PROVIDE FLOW ALARM INDICATOR WITH ALARM TO PROCESS CONTROL WORKSTATION
3. PROVIDE WITH OPTIONAL MIXING VALVE SET AT 85 DEG F
4. PER THE CUT SHEET, THE 6 KW OFFERS THE HIGHEST RECOVERY RATE FOR THIS EQUIPMENT AT A HIGHER RISE IN TEMPERATURE.

LANL BUILDING OFFICIAL
APPROVED
REVIEWED FOR LANL STANDARDS COMPLIANCE PER ISD 341 - 2, CH. 18

BRIAN C. ALLENWEILIGER
NEW MEXICO
18375
PROFESSIONAL ENGINEER
11-10-11

NO	DATE	CLASS REV	DESCRIPTION	DWN	VER	CHKD	SUB	APP

HDR ENGINEERING INC.
2155 LOUISIANA BLVD., NE
SUITE 9500
ALBUQUERQUE, NM 87110
MAIN: (505) 830-9400 FAX: (505) 830-6454

SERF EXPANSION

PLUMBING SCHEDULES

BLDG. 3093 TA-03

DRAWN	S.G.
DESIGN	B.A.
CHECKED	J.L.
DATE	11-10-11

SUBMITTED
APPROVED FOR RELEASE

Los Alamos NATIONAL LABORATORY
PO Box 1663
Los Alamos, New Mexico 87545

SHEET P-7000
38 OF 72

CLASSIFICATION UNCLASSIFIED REVIEWER DATE 1/25/2012

PROJECT ID 102310
DRAWING NO C-55752
REV 0

ECN-11-TA-03-1398-0000-0265

C:\pwworking\phx\d0224123\102310-P-7000-R0.dwg, Jan 16, 2012 @ 8:32am

ENV-RCRA-12-0059

ENCLOSURE 3

LAUR-12-10463

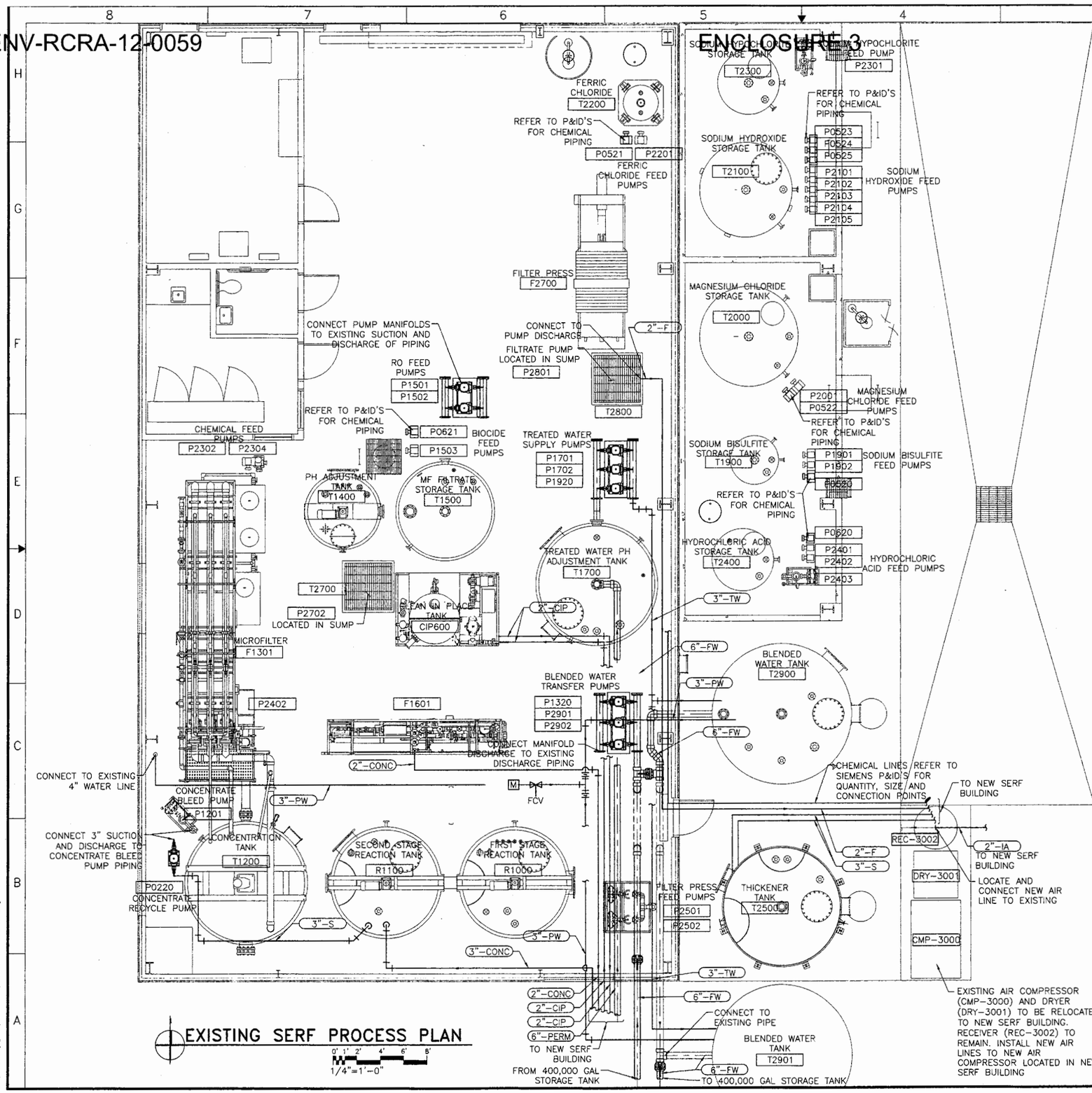

EXISTING SERF PROCESS PLAN

GENERAL NOTES:

1. IF THIS SHEET IS NOT 24"X36", THEN IT IS A REDUCED SIZE PLOT. USE GRAPHIC SCALE ACCORDINGLY.
2. SUBCONTRACTOR TO FIELD VERIFY ALL EXISTING EQUIPMENT AND COORDINATE WITH NEW EQUIPMENT AS REQUIRED.
3. HEAT TRACE AND INSULATE ALL EXTERIOR EXPOSED PIPING.
4. INSTALL PIPE SUPPORT AND HANGERS IN ACCORDANCE WITH SPECIFICATIONS.
5. SUBCONTRACTOR TO COORDINATE PIPE ROUTING WITH EXISTING PIPING AND PROCESS EQUIPMENT.
6. CHEMICAL PIPING NOT SHOWN. REFER TO SIEMENS P&ID'S FOR CHEMICAL PIPING.
7. FOR CLARITY, VALVES, REDUCERS AND OTHER APPURTENANCES ARE NOT SHOWN. REFER TO SIEMENS P&ID'S.
8. ALL PROCESS EQUIPMENT RELATED TO THE SERF FACILITY IS PROVIDED BY SIEMENS AND ALL SUPPORTING DOCUMENTATION FOR EQUIPMENT WILL BE PROVIDED BY SIEMENS AS A CONSTRUCTION SUBMITTAL.
9. SEE DRAWING M-0001 FOR PIPING SYMBOLGY LEGEND.
10. ANY DIMENSIONS SHOWN ARE APPROXIMATE. CONTRACTOR TO FIELD MODIFY LOCATION OF ALL PROCESS INFRASTRUCTURE COMPONENTS/FIXTURES INCLUDING BUT NOT LIMITED TO PIPING, TANKS, PUMPS AND ALL OTHER EQUIPMENT AS NEEDED TO COORDINATE WITH INSTALLATION OF OTHER PROJECT ELEMENTS.
11. FOR CLARITY, ONLY LARGE DIAMETER PIPING IS SHOWN. REFER TO SIEMENS P&ID'S FOR ALL PIPING AND APPURTENANCES.

SIEMENS PROCESS FLOW ABBREVIATIONS

BA	BLOWER AIR	CIP	CLEAN-IN-PLACE
BW	BACKWASH WATER	$FeCl_3$	FERRIC CHLORIDE
CW	CLARIFIED WATER	$NaHSO_3$	SODIUM BISULFITE
D	DRAIN	$MgCl_2$	MAGNESIUM CHLORIDE
DI	DEMINERALIZED WATER	NaOH	SODIUM HYDROXIDE
EFF	EFFLUENT	NaOCl	SODIUM HYPOCHLORITE
F	FILTRATE	V	VENT
FL	FLUSH WATER	FW	FILTERED WATER
IA	INSTRUMENT AIR	CONC	CONCENTRATE
P	POLYMER	HCl	HYDROCHLORIC ACID
PA	PLANT AIR	NaOH	SODIUM HYDROXIDE
PW	PLANT WATER	TW	TREATED WATER
RW	RINSE WATER	H_2SO_4	SULFURIC ACID
S	SLUDGE	PERM	PERMEATE
SA	SULFURIC ACID	F.C.	FAIL CLOSE
SBW	SPENT BACKWASH	F.O.	FAIL OPEN
WW	WASTEWATER		

NO	DATE	CLASS REV	DESCRIPTION	DWN	VER	CHKD	SUB	APP
1	12/7/11		LANL REVIEW COORDINATION UPDATE	BF	-	-	-	-

HDR ENGINEERING INC.
2155 LOUISIANA BLVD., NE
SUITE 9500
ALBUQUERQUE, NM 87110
MAIN: (505) 830-5400 FAX: (505) 830-5454

SERF EXPANSION

EXISTING SERF BUILDING GENERAL PROCESS EQUIPMENT ARRANGEMENT PLAN

BLDG. 3093 TA-03

DRAWN	B.F.
DESIGN	W.C.
CHECKED	E.D.
DATE	11-10-11

SUBMITTED

APPROVED FOR RELEASE

Los Alamos NATIONAL LABORATORY PO Box 1663 Los Alamos, New Mexico 87545

SHEET D-1000

39 OF 72

CLASSIFICATION UNCLASSIFIED REVIEWED DATE 1/25/2012

PROJECT ID 102310 DRAWING NO C-55752 REV 1

LANL BUILDING OFFICIAL APPROVED

CHRIS RODRIGUEZ NEW MEXICO 16239 LICENSED PROFESSIONAL ENGINEER

ECN-11-TA-03-1398-0000-0265

C:\pwworking\phx\d0224124\102310-D-1000-R1.dwg, Jan 16, 2012 @ 8:36am

ENV-RCRA-12-0059

ENCLOSURE 3

LAUR-12-10463

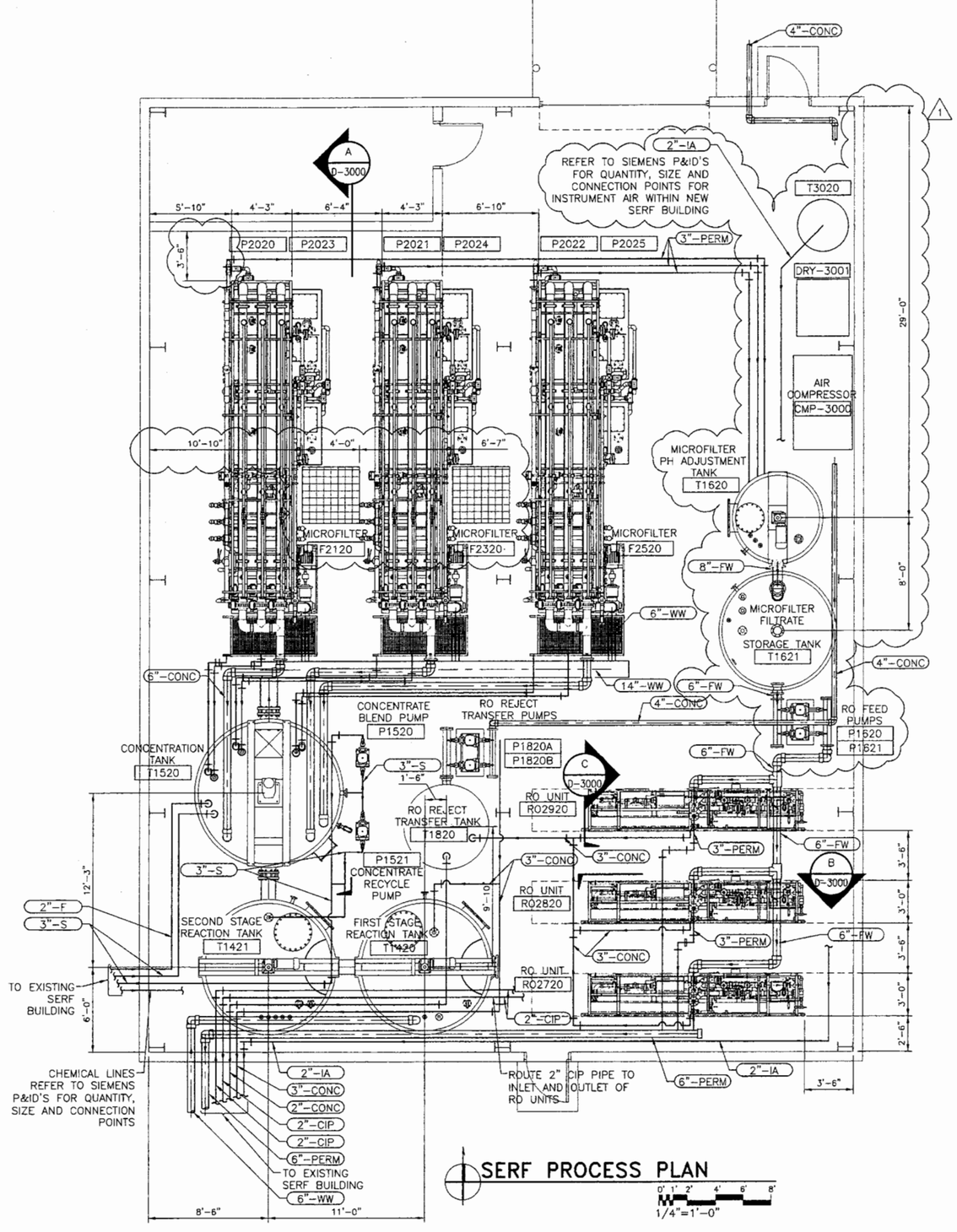

SERF PROCESS PLAN

0' 1' 2' 4' 6' 8'
1/4"=1'-0"

GENERAL NOTES:

1. IF THIS SHEET IS NOT 24"X36", THEN IT IS A REDUCED SIZE PLOT. USE GRAPHIC SCALE ACCORDINGLY.
2. HEAT TRACE AND INSULATE ALL EXTERIOR EXPOSED PIPING.
3. INSTALL PIPE SUPPORT AND HANGERS IN ACCORDANCE WITH SPECIFICATIONS.
4. SUBCONTRACTOR TO COORDINATE PIPE ROUTING WITH PROCESS EQUIPMENT.
5. CHEMICAL PIPING NOT SHOWN. REFER TO SIEMENS P&ID'S FOR CHEMICAL PIPING.
6. FOR CLARITY, VALVES, REDUCERS AND OTHER APPURTENANCES ARE NOT SHOWN. REFER TO SIEMENS P&ID'S.
7. ALL PROCESS EQUIPMENT RELATED TO THE SERF FACILITY IS PROVIDED BY SIEMENS AND ALL SUPPORTING DOCUMENTATION FOR EQUIPMENT WILL BE PROVIDED BY SIEMENS AS A CONSTRUCTION SUBMITTAL.
9. SEE DRAWING M-0001 FOR PIPING SYMBOLOGY.
10. ANY DIMENSIONS SHOWN ARE APPROXIMATE. CONTRACTOR TO FIELD MODIFY LOCATION OF ALL PROCESS INFRASTRUCTURE COMPONENTS/FIXTURES INCLUDING BUT NOT LIMITED TO PIPING, TANKS, PUMPS AND ALL OTHER EQUIPMENT AS NEEDED TO COORDINATE WITH INSTALLATION OF OTHER PROJECT ELEMENTS.
11. FOR CLARITY, ONLY LARGE DIAMETER PIPING IS SHOWN. REFER TO SIEMENS P&ID'S FOR ALL PIPING AND APPURTENANCES.

SIEMENS PROCESS FLOW ABBREVIATIONS

BA	BLOWER AIR	CIP	CLEAN-IN-PLACE
BW	BACKWASH WATER	$FeCl_3$	FERRIC CHLORIDE
CW	CLARIFIED WATER	$NaHSO_3$	SODIUM BISULFITE
D	DRAIN	$MgCl_2$	MAGNESIUM CHLORIDE
DI	DEMINERALIZED WATER	NaOH	SODIUM HYDROXIDE
EFF	EFFLUENT	NaOCl	SODIUM HYPOCHLORITE
F	FILTRATE	V	VENT
FL	FLUSH WATER	FW	FILTERED WATER
IA	INSTRUMENT AIR	CONC	CONCENTRATE
P	POLYMER	HCl	HYDROCHLORIC ACID
PA	PLANT AIR	NaOH	SODIUM HYDROXIDE
PW	PLANT WATER	TW	TREATED WATER
RW	RINSE WATER	H_2SO_4	SULFURIC ACID
S	SLUDGE	PERM	PERMEATE
SA	SULFURIC ACID	F.C.	FAIL CLOSE
SBW	SPENT BACKWASH	F.O.	FAIL OPEN
WW	WASTEWATER		

NO	DATE	CLASS REV	DESCRIPTION	DWN	VER	CHKD	SUB	APP
1	12/7/11		LANL REVIEW COORDINATION UPDATE	BF	–	–	–	–

HDR ENGINEERING INC.
2155 LOUISIANA BLVD., NE
SUITE 9500
ALBUQUERQUE, NM 87110
MAIN: (505) 830-5400 FAX: (505) 830-5454

SERF EXPANSION

SERF BUILDING GENERAL PROCESS EQUIPMENT ARRANGEMENT PLAN

BLDG. 3093 TA-03

DRAWN W.G.
DESIGN W.G.
CHECKED E.B.
DATE 11-10-11

SUBMITTED
APPROVED FOR RELEASE

LANL BUILDING OFFICIAL APPROVED
RA Trout
105567
1-26-12
12-008
REVIEWED FOR LANL STANDARDS COMPLIANCE PER ISD 341-2, CH 18

CHRIS RODRIGUEZ NEW MEXICO 16239 LICENSED PROFESSIONAL ENGINEER
11/10/11

Los Alamos NATIONAL LABORATORY PO Box 1663 Los Alamos, New Mexico 87545

CLASSIFICATION UNCLASSIFIED REVIEWER DATE 1/25/2012

PROJECT ID 102310
DRAWING NO C-55752
REV 1

SHEET D-1001
40 OF 72

ECN-11-TA-03-1398-0000-0265

C:\pwworking\phx\d0224124\102310-D-1001-R1.dwg, Jan 16, 2012 @ 8:39am

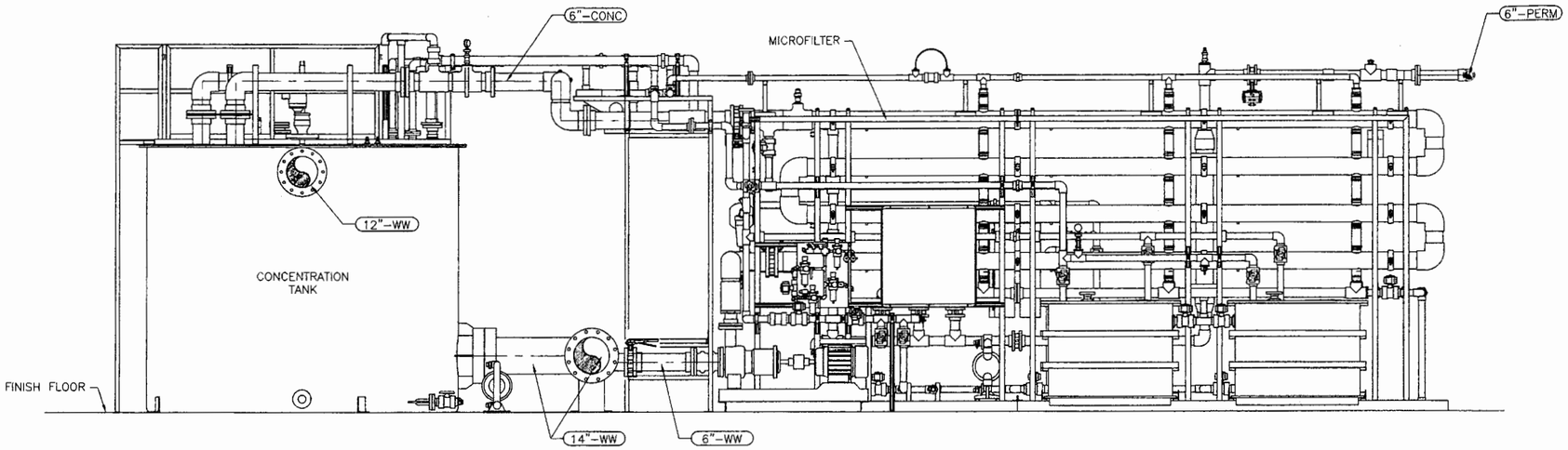

A D-1001 MICROFILTER SECTION

1' 6" 0 1' 2' 3'
1/2"=1'-0"

GENERAL NOTES:

1. IF THIS SHEET IS NOT 24"X36", THEN IT IS A REDUCED SIZE PLOT. USE GRAPHIC SCALE ACCORDINGLY.
2. INSTALL PIPE SUPPORT AND HANGERS IN ACCORDANCE WITH SPECIFICATIONS.
3. CONTRACTOR TO COORDINATE PIPE ROUTING WITH PROCESS EQUIPMENT.
4. CHEMICAL PIPING NOT SHOWN. REFER TO SIEMENS P&ID'S FOR CHEMICAL PIPING.
5. FOR CLARITY, VALVES, REDUCERS AND OTHER APPURTENANCES ARE NOT SHOWN. REFER TO SIEMENS P&ID'S.
6. ALL PROCESS EQUIPMENT RELATED TO THE SERF FACILITY IS PROVIDED BY SIEMENS AND ALL SUPPORTING DOCUMENTATION FOR EQUIPMENT WILL BE PROVIDED BY SIEMENS AS A CONSTRUCTION SUBMITTAL.

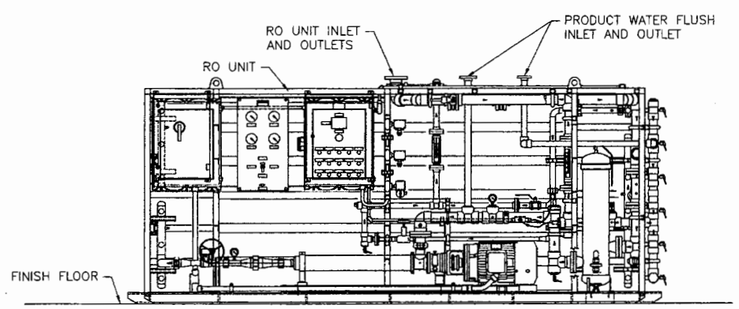

B D-1001 RO UNIT SECTION

1' 6" 0 1' 2' 3'
1/2"=1'-0"

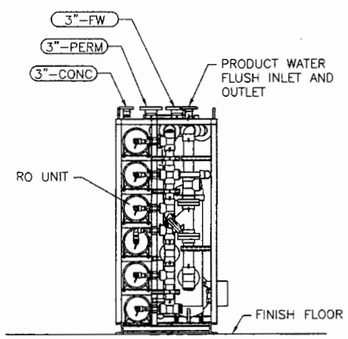

C D-1001 RO UNIT SECTION

1' 6" 0 1' 2' 3'
1/2"=1'-0"

LANL BUILDING OFFICIAL APPROVED
REVIEWED FOR LANL STANDARDS COMPLIANCE PER ISO 241-2, QA 18

CHRIS RODRIGUEZ NEW MEXICO 16239 LICENSED PROFESSIONAL ENGINEER 11/10/11

NO	DATE	CLASS REV	DESCRIPTION	DWN	VER	CHKD	SUB	APP

HDR ENGINEERING INC.
2158 LOUISIANA BLVD., NE
SUITE 9500
ALBUQUERQUE, NM 87110
MAIN: (505) 830-5400 FAX: (505) 830-5454

SERF EXPANSION

SERF BUILDING
PROCESS SECTIONS

BLDG. 3093 TA-03

DRAWN	W.C.
DESIGN	W.C.
CHECKED	E.D.
DATE	11-10-11

SUBMITTED

APPROVED FOR RELEASE

Los Alamos NATIONAL LABORATORY PO Box 1663 Los Alamos, New Mexico 87545

SHEET D-3000 42 OF 72

CLASSIFICATION UNCLASSIFIED REVIEWED DATE 1/25/2012

PROJECT ID 102310 DRAWING NO C-55752 REV 0

ECN-11-TA-03-1398-0000-0265

C:\pwworking\phx\d0224124\102310-D-3000-R0.dwg, Jan 16, 2012 @ 8:40am

PIPING SYMBOLOGY

VALVES

SINGLE LINE	DOUBLE LINE	ISOLATION
		BALL VALVE
		BUTTERFLY VALVE
		DIAPHRAGM VALVE
		GATE VALVE
		PVC GATE VALVE
		GLOBE VALVE
		KNIFE GATE VALVE
		NEEDLE VALVE
		PINCH VALVE
		PLUG VALVE
		THREE-WAY BALL VALVE
		THREE-WAY PLUG VALVE
		CONTROL
		BALL CHECK VALVE
		CHECK VALVE
		DOUBLE-DISK CHECK VALVE
		CONE VALVE
OR	OR	PRESSURE RELIEF VALVE
		PRESSURE-REDUCING VALVE
X	X	AIR RELEASE VACUUM VALVE A = AIR RELEASE VAC = VACUUM
		PRESSURE-REGULATING VALVE
		3-WAY CONTROL VALVE

MISCELLANEOUS

- PIPE JOINT (SEE SPECS FOR REQUIREMENTS)
- COMPRESSION SLEEVE TYPE COUPLING
- FLANGED COUPLING ADAPTER (FCA)
- FLEXIBLE CONNECTION
- HARNESSED MECHANICAL COUPLING
- PRESSURE GAGE (W/COCK)
- TRAP
- QUICK DISCONNECT CAM & GROOVE COUPLING
- CAP OR PLUG
- CO — INTERIOR CLEANOUT
- HB-X — HOSE VALVE, HOSE BIBB, OR FLUSHING CONNECTION
- HR-X — HOSE RACK
- FD-X — FLOOR DRAIN
- X = TYPE DESIGNATED IN SPECIFICATIONS
- PIPE IN SECTION
- BU — BELL UP (PLAN)
- BU — BELL UP (SECTION OR SCHEMATIC)
- D — DRAIN (SECTION OR SCHEMATIC)
- ATA — AIR TOOL ASSEMBLY
- AVS — AUTOMATIC VALVE STATION
- PRS — PRESSURE-REDUCING STATION

MISCELLANEOUS

- BACKFLOW PREVENTER
- M — WATER METER
- VARIABLE AREA METER
- UNION
- WYE-STRAINER
- PENETRATION THROUGH STRUCTURE
- FLEXIBLE HOSE OR TUBING
- FLEXIBLE PIPING CONNECTION
- LINE SIZE CHANGE (CONCENTRIC REDUCER)
- LINE SIZE CHANGE (ECCENTRIC REDUCER)
- LINE TURNING DOWN
- LINE TURNING UP
- BLIND FLANGE
- PIPE BREAK

NOTE:
MISCELLANEOUS SYMBOLOGY SHOWN IS FOR SINGLE-LINE PIPING. DOUBLE-LINE PIPING SYMBOLS ARE SIMILAR.

HVAC SYMBOLOGY

- 24x18 — SUPPLY AIR OR OUTSIDE AIR DUCT UP (SECTION CUT, FIRST DIMENSION DUCT WIDTH)
- SUPPLY AIR OR OUTSIDE AIR DUCT DOWN (NO SECTION CUT)
- RETURN AIR DUCT UP (SECTION CUT)
- RETURN AIR DUCT DOWN (NO SECTION CUT)
- EXHAUST AIR DUCT UP (NO SECTION CUT)
- EXHAUST AIR DUCT DOWN (NO SECTION CUT)
- ROUND ELBOW UP
- ROUND ELBOW DOWN
- TRANSITION – DOUBLE SIDED
- TRANSITION – ONE SIDED
- TRANSITION – RECTANGULAR TO ROUND DUCT
- STANDARD BRANCH – FOR SUPPLY AIR W/EXTRACTOR AND RETURN AIR W/O EXTRACTOR
- ELBOW – W/TURNING VANE (RECTANGULAR)
- ELBOW – W/TURNING VANES (RECTANGULAR), SMOOTH RADIUS
- GOOSENECK HOOD (COWL)
- 18x24 — RECTANGULAR DUCT OR OPENING SIZE – FIRST NUMBER INDICATES SIZE OF SIDE SHOWN
- 18" DIA — ROUND DUCT SIZE
- R OR D — RECTANGULAR DUCT INCLINE – RISE OR DROP IN RESPECT TO THE AIR FLOW
- R OR D — ROUND DUCT INCLINE – RISE OR DROP IN RESPECT TO THE AIR FLOW
- 18x24 — HIDDEN DUCT
- T 9'-10" B 9'-0" / 18x10 — DUCT ELEVATION TAG ABOVE FINISH FLOOR
- PRESSURE/TEMPERATURE TEST PLUG (PETE PLUG OR EQUAL)
- SA — SOUND ATTENUATOR
- SD — SPLITTER DAMPER
- VD, BDD — VD = VOLUME DAMPER; BDD = BACKDRAFT DAMPER
- M — MOTOR OPERATED DAMPER
- FIRE DAMPER
- SMOKE DAMPER
- SMOKE AND FIRE DAMPER
- FLEXIBLE CONNECTION
- FLEXIBLE DUCT
- ACOUSTICAL LINING – DUCT DIMENSIONS FOR NET FREE AREA
- SIZE CFM — SUPPLY AIR REGISTER OR GRILLE – W/DUCT-MOUNTED EXTRACTOR
- SIZE CFM — EXHAUST AIR OR RETURN AIR REGISTER OR GRILLE
- SIZE CFM — EXHAUST AIR OR RETURN AIR REGISTER OR GRILLE
- SIZE CFM — SUPPLY AIR ASSEMBLY SQUARE DIFFUSER
- SIZE CFM — SUPPLY AIR ASSEMBLY ROUND DIFFUSER
- WALL LOUVER
- AD PLAN / AD SECTION — ACCESS DOOR
- UC 3/4" — UNDERCUT DOOR 3/4"
- AD — ACCESS DOOR OR ACCESS PANEL IN DUCTWORK
- INTAKE OR RELIEF HOOD
- DOOR GRILLE
- AIR FLOW — BACKDRAFT DAMPER
- EXHAUST ROOF VENTILATOR PROPELLER OR CENTRIFUGAL TYPE
- PROPELLER WALL FAN
- ROOM AIR CONDITIONING UNIT
- INTAKE/EXHAUST LOUVER
- SUPPLY, RETURN OR EXHAUST FAN
- AIR FILTER

HVAC CONTROL SYMBOLOGY

- TC — TEMPERATURE CONTROLLER
- TT — TEMPERATURE TRANSMITTER
- TS — TEMPERATURE SWITCH
- T — THERMOSTAT
- TI — TEMPERATURE INDICATOR
- % — PERCENTAGE TIMER
- RC — RECEIVER CONTROLLER
- HOA — HAND-OFF-AUTO
- MS — MOTOR STARTER
- M — DAMPER ACTUATOR
- PI — PRESSURE INDICATOR
- FRZ — FREEZE STAT
- FS — FIRE STAT
- DPS — DIFFERENTIAL PRESSURE SWITCH
- SD — SMOKE DETECTOR
- FS — FLOW SWITCH
- PS — PRESSURE SWITCH
- D — TIME DELAY
- M — MINIMUM POSITION RELAY
- S — SIGNAL
- AO — ANALOG OUTPUT
- AI — ANALOG INPUT
- DO — DIGITAL OUTPUT
- DI — DIGITAL INPUT
- C — COMMON PORT
- S — SIGNAL PORT
- NO — NORMALLY OPEN
- NC — NORMALLY CLOSED
- BALANCING VALVE
- RHC — RESISTANCE HEATING CONTACTOR
- TA — TEST-AUTO
- TOA — TEST-OFF-AUTO
- ELECTRIC SIGNAL
- PIPING
- BULB-TYPE THERMOSTAT

AIR FLOW SCHEMATIC AND TEMPERATURE CONTROL DIAGRAM SYMBOLOGY

- C/C — CHILLED WATER COOLING COIL
- H/C — HOT WATER HEATING COIL
- EP/R — DIRECT EVAPORATIVE COOLER
- D/X — DIRECT EXPANSION COOLING COIL
- EH/C — ELECTRIC HEATING COIL
- VFD — VFD (VARIABLE FREQUENCY DRIVE)
- H/C CAV — CONSTANT AIR VOLUME BOX WITH REHEAT COIL
- H/C VAV — VARIABLE AIR VOLUME BOX WITH REHEAT COIL

MISCELLANEOUS SYMBOLOGY

- MIST ELIMINATOR
- ACTIVATED CARBON OR CHEMICAL FILTER
- CENTRIFUGAL PUMP
- SPRAY NOZZLE/HUMIDIFIER

GENERAL NOTES:

1. THIS IS A STANDARD PROCESS, MECHANICAL AND PLUMBING SYMBOLOGY SHEET. ALL SYMBOLS ARE NOT NECESSARILY USED ON THIS PROJECT.
2. SCREENING OR SHADING OF WORK IS USED TO INDICATE EXISTING COMPONENTS OR TO DE-EMPHASIZE PROPOSED IMPROVEMENTS TO HIGHLIGHT SELECTED TRADE WORK. REFER TO CONTEXT OF EACH SHEET FOR USAGE.
3. SEE INSTRUMENTATION LEGEND SHEET FOR PROJECT-SPECIFIC EQUIPMENT SYMBOLS, EQUIPMENT ABBREVIATIONS, AND PIPING SYSTEM ABBREVIATIONS.

LANL BUILDING OFFICIAL APPROVED — REVIEWED FOR LANL STANDARDS COMPLIABLE PER IEC 241-2-DP-10 — 105567 — 1-26-12 — 12-008

BRIAN C. ALLENBEIGER — NEW MEXICO — 16175 — PROFESSIONAL ENGINEER — 11-10-11

NO	DATE	CLASS REV	DESCRIPTION	DWN	VER	CHKD	SUB	APP

HDR ENGINEERING INC.
2155 LOUISIANA BLVD., NE
SUITE 9500
ALBUQUERQUE, NM 87110
MAIN: (505) 830-5400 FAX: (505) 830-5454

SERF EXPANSION

MECHANICAL LEGEND

BLDG. 3093 TA-03

DRAWN	S.G.
DESIGN	B.A.
CHECKED	J.L.
DATE	11-10-11

SUBMITTED: B. Allenbeiger — APPROVED FOR RELEASE: [signature]

Los Alamos NATIONAL LABORATORY
PO Box 1663
Los Alamos, New Mexico 87545

SHEET M-0001 — 43 OF 72

CLASSIFICATION: UNCLASSIFIED — REVIEWED: [signature] — DATE: 1/25/2012

PROJECT ID: 102310 — DRAWING NO: C-55752 — REV: 0

ECN-11-TA-03-1398-0000-0265

C:\pwworking\phx\d0224125\102310-M-0001-R0.dwg, Jan 16, 2012 @ 8:40am

ENV-RCRA-12-0059

ENCLOSURE 3

LAUR-12-10463

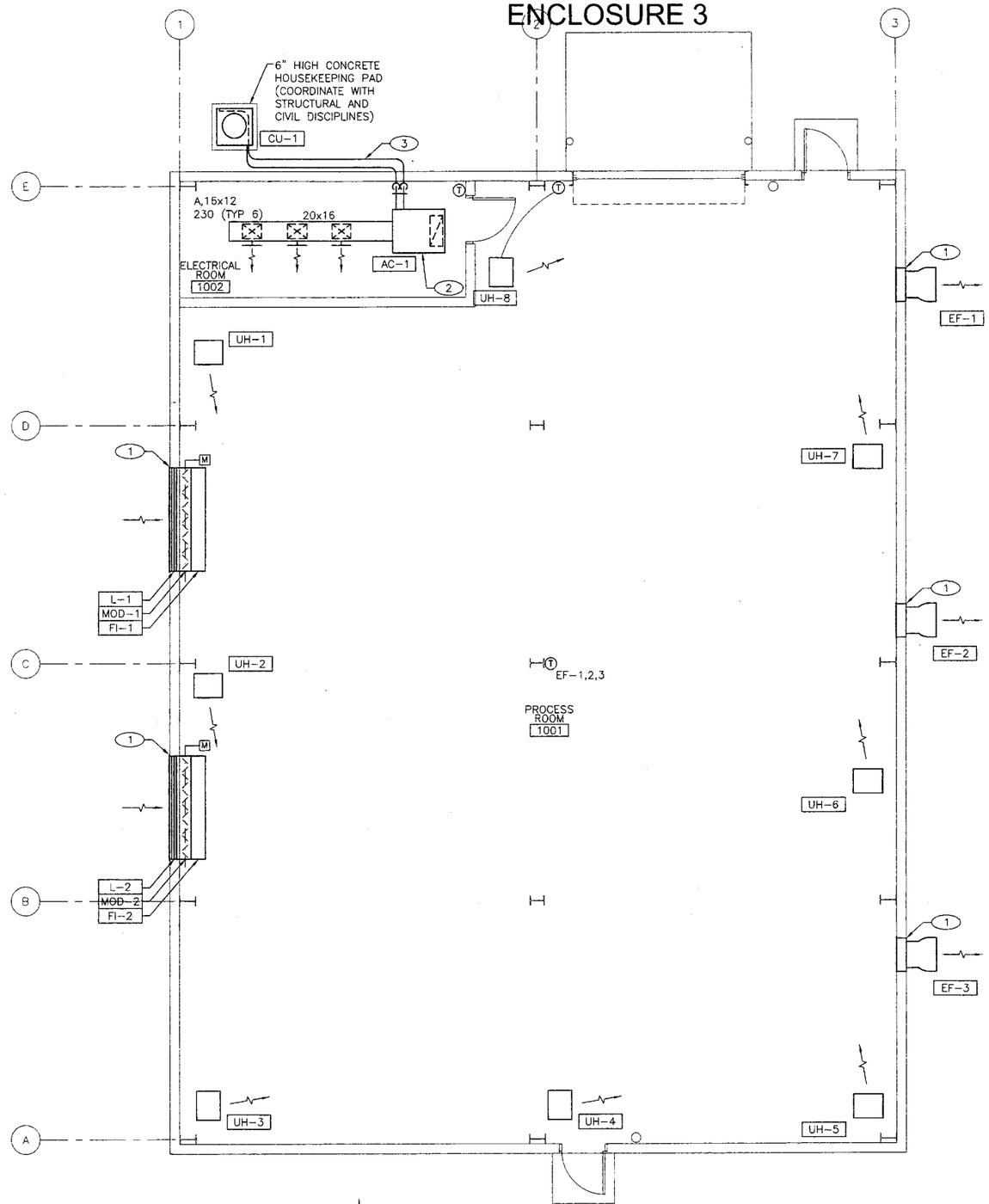

FLOOR PLAN – HVAC

1/4"=1'-0"

GENERAL NOTES:

1. IF THIS SHEET IS NOT 24"X36", THEN IT IS A REDUCED SIZE PLOT. USE GRAPHIC SCALE ACCORDINGLY.
2. CONTRACTOR SHALL LOCATE ALL MECHANICAL EQUIPMENT, DUCTWORK, CONTROLS, ETC. IN ACCORDANCE WITH NEC REQUIREMENTS.
3. CONTRACTOR IS RESPONSIBLE FOR COORDINATING ALL MECHANICAL WORK WITH OTHER DISCIPLINES AND MEETING ALL ACCESSIBILITY, CLEARANCE, AND CODE REQUIREMENTS.
4. IT IS THE RESPONSIBILITY OF THE CONTRACTOR TO IDENTIFY ANY DISCREPANCIES OR CONFLICTS AND BRING IT TO THE ATTENTION OF THE ENGINEER.
5. SEE SHEET M-5000 FOR MECHANICAL STANDARD DETAILS.
6. ANY DIMENSIONS SHOWN ARE APPROXIMATE. CONTRACTOR TO FIELD MODIFY LOCATION OF ALL MECHANICAL AND PLUMBING INFRASTRUCTURE COMPONENTS/FIXTURES INCLUDING BUT NOT LIMITED TO PIPING, DRAINS, AND EQUIPMENT AS NEEDED TO COORDINATE WITH INSTALLATION OF OTHER PROJECT ELEMENTS.

KEYED NOTES:

1. REFER TO SHEET A-2001 FOR MOUNTING HEIGHTS.
2. RETURN AIR SHALL FLOW THROUGH THE RETURN AIR DEVICE LOCATED ON THE UNIT. CONDENSATE LINE SHALL BE AS SHOWN ON DETAIL 5/M-5000 AND ROUTED TO DRYWELL AS SHOWN ON DETAIL 6/M-5000.
3. REFRIGERANT LINES SHALL BE PROVIDED AND SIZED PER MANUFACTURERS RECOMMENDATIONS.

SEQUENCE OF OPERATION:

SUMMER:

1. IF ROOM TEMPERATURE EXCEEDS SETPOINT (80 DEGREES F-ADJUSTABLE), MOD-1,2 SHALL OPEN. UPON SIGNAL THAT MOD'S ARE OPEN, EF-1,2,3 SHALL ENERGIZE.
2. IF ROOM TEMPERATURE FALLS BELOW SETPOINT (75 DEGREES F-ADJUSTABLE), EF-1,2,3 SHALL DE-ENERGIZE. UPON SIGNAL THAT EF'S ARE DE-ENERGIZED, MOD-1,2 SHALL CLOSE.
3.

WINTER:

4. IF ROOM TEMPERATURE FALLS BELOW 62 DEGREES F (ADJUSTABLE), UH-1,2,3,4,5,6,7,8 SHALL ENERGIZE.
5. IF ROOM TEMPERATURE EXCEEDS 65 DEGREES F, UH-1,2,3,4,5,6,7,8 SHALL DE-ENERGIZE.

AC-1:

1. AC-1 SHALL OPERATE ALL YEAR ROUND TO MAINTAIN ROOM SETPOINT OF 80 DEGREES F (ADJUSTABLE). IF ROOM TEMPERATURE EXCEEDS 90 DEGREES F, A SIGNAL SHALL BE SENT TO A REMOTE ALARM THROUGH THE SCADA SYSTEM TO THE CONTROLLER.
2.

NO	DATE	CLASS REV	DESCRIPTION	DWN	VER	CHKD	SUB	APP
1	12/7/11		LANL REVIEW COORDINATION UPDATE	BF	–	–	–	–

HDR ENGINEERING INC.
2155 LOUISIANA BLVD., NE
SUITE 5000
ALBUQUERQUE, NM 87110
MAIN: (505) 830-5400 FAX: (505) 830-5454

SERF EXPANSION

SERF BUILDING HVAC PLAN

BLDG. 3093 TA-03

DRAWN	S.G.
DESIGN	B.A.
CHECKED	J.T.
DATE	11-10-11

SUBMITTED

APPROVED FOR RELEASE

Los Alamos NATIONAL LABORATORY
PO Box 1663
Los Alamos, New Mexico 87545

SHEET M-1000

44 OF 72

CLASSIFICATION UNCLASSIFIED

REVIEWED

DATE 12/7/2012

PROJECT ID 102310

DRAWING NO C-55752

REV 1

LANL BUILDING OFFICIAL
BY RA Wood
ID 105567
DATE 1-26-12
NO. 12-008
APPROVED
REVIEWED FOR LANL STANDARDS COMPLIANCE PER ISD 341-2, CH 10

BRIAN C. ALLENBRIGHT
NEW MEXICO
16175
PROFESSIONAL ENGINEER
11-10-11

ECN-11-TA-03-1398-0000-0265

C:\pwworking\phx\d0224125\102310-M-1000-R1.dwg, Jan 16, 2012 @ 8:41am

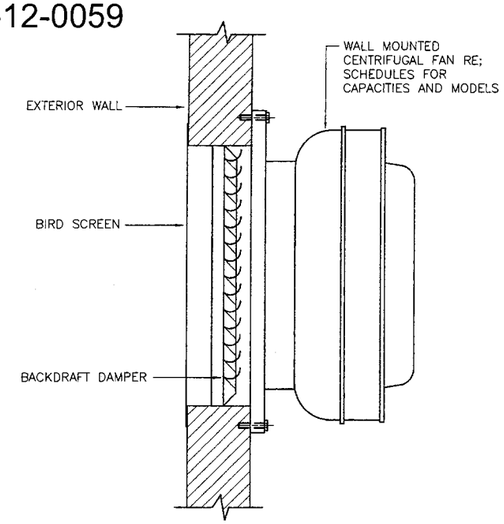

NOTE: REFER TO DRAWINGS FOR DIRECTION OF AIR FLOW.

1 WALL MOUNTED EXHAUST FAN DETAIL
SCALE: NONE

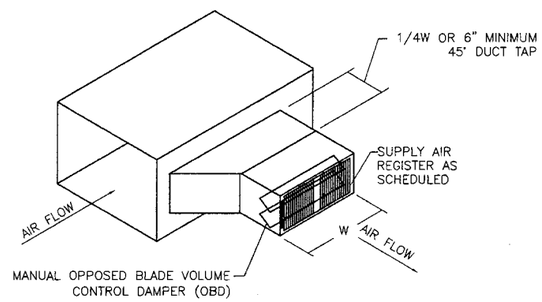

2 BRANCH DUCT DETAIL WITH OBD
SCALE: NONE

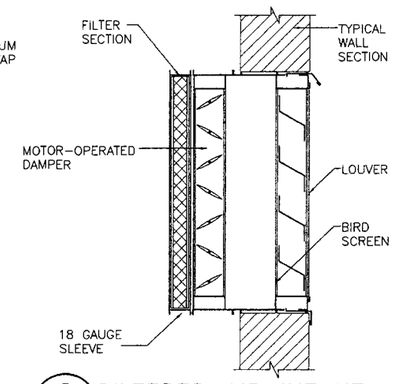

3 FILTERED AIR INTAKE
SCALE: NONE

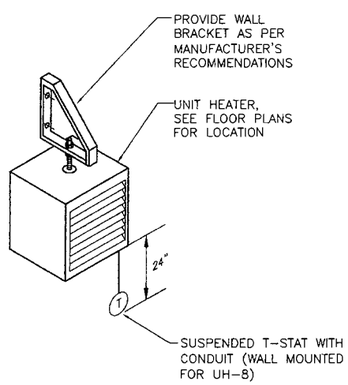

4 UNIT HEATER DETAIL
SCALE: NONE

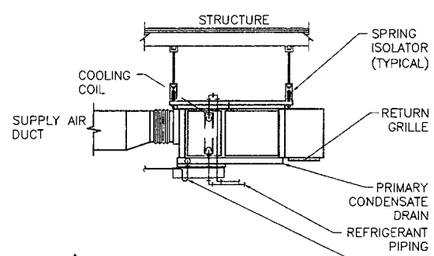

1
NOTE:
FIELD ROUTE CONCENTRATE DRAIN LINE TO DRY WELL. SEE DETAIL 6.

5 SUSPENDED FAN AND COIL UNIT DETAIL
SCALE: NONE

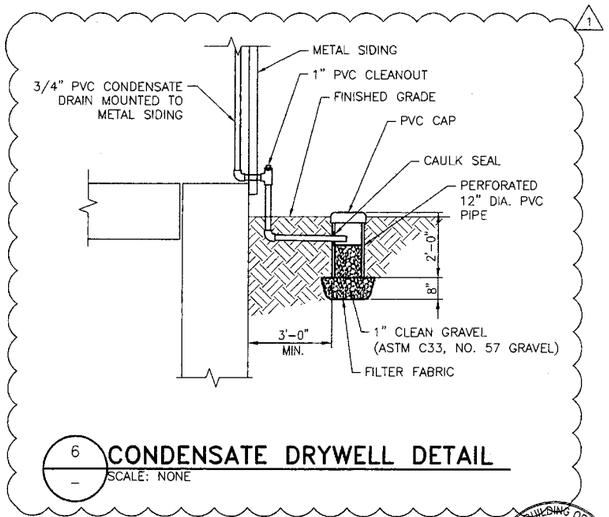

6 CONDENSATE DRYWELL DETAIL
SCALE: NONE

LANL BUILDING OFFICIAL
RN Hall
105567
1-26-12
12-5008
APPROVED
REVIEWED FOR LANL STANDARDS COMPLIANCE PER ISO 341-2 CH 10

BRIAN C. ALLENBEIGER
NEW MEXICO
18175
PROFESSIONAL ENGINEER
11-10-11

NO	DATE	CLASS REV	DESCRIPTION	DWN	VER	CHKD	SUB	APP
1	12/7/11	EXS UNCLASSIFIED	LANL REVIEW COORDINATION UPDATE	BF	–	–	–	–

HDR ENGINEERING INC.
2155 LOUISIANA BLVD., NE
SUITE 9500
ALBUQUERQUE, NM 87110
MAIN: (505) 830-5400 FAX: (505) 830-5454

SERF EXPANSION

MECHANICAL STANDARD DETAILS

BLDG. 3093 TA-03

DRAWN	S.G.
DESIGN	B.A.
CHECKED	J.L.
DATE	11-10-11

SUBMITTED
APPROVED FOR RELEASE

Los Alamos NATIONAL LABORATORY PO Box 1663 Los Alamos, New Mexico 87545

SHEET M-5000
45 OF 72

CLASSIFICATION UNCLASSIFIED REVIEWER DATE 1/25/2012

PROJECT ID 102310
DRAWING NO C-55752
REV 1

ECN-11-TA-03-1398-0000-0265

C:\pwworking\phx\d0224125\102310-M-5000-R1.dwg, Jan 16, 2012 @ 8:42am

SPLIT SYSTEM SCHEDULE

MARK	SERVICES	INDOOR UNIT: MAX AIRFLOW CFM	COOLING CAPACITY: TOTAL MBH	COOLING CAPACITY: SENS MBH	ENTERING CONDITION (DB/WB)	LEAVING CONDITION (DB/WB)	EXTERNAL STATIC PRESSURE	ELECTRICAL DATA: MCA	ELECTRICAL DATA: MOCP	ELECTRICAL DATA: VOLTAGE/ PHASE	UNIT WEIGHT LB.	MARK	OUTDOOR UNIT: AMBIENT (DB)	OUTDOOR UNIT: REFRIG TYPE	OUTDOOR UNIT: ALTITUDE (FT)	SEER	EER	ELECTRICAL DATA: MCA	ELECTRICAL DATA: MAX FUSE SIZE	ELECTRICAL DATA: V/PH	BASIS OF DESIGN	FCU MODEL	CU MODEL	NOTES
AC-1	ELECTRICAL ROOM	1390	45.7	45.7	80/63	53/52	0.375	7.5	15	208/1	450	CU-1	89	R-410A	7500	15.0	12.5	27.8	40	208/1	CARRIER	FB4C	24ABC	1,2,3,4

NOTES:
1. UNIT SHALL MEET SCHEDULED CAPACITIES AT 7,500 FT ELEVATION.
2. PROVIDE CONDENSATE PUMP WITH AUTOMATIC SHUT DOWN UPON OVERFLOW. EXTEND INSULATED CONDENSATE DRAIN TO WET WELL.
3. SINGLE POINT SYSTEM POWER WITH DISCONNECTS BY ELECTRICAL CONTRACTOR.
4. PROVIDE ACCESSORIES FOR LOW-AMBIENT CONTROLS- 5 DEGREE F WINTER OPERATION.

FAN SCHEDULE

MARK	LOCATION	AREA SERVED	TYPE	FAN DATA: FLOW (CFM)	FAN DATA: E.S.P. (IN.W.G.)	FAN DATA: LEVEL CRITERIA (SONES)	FAN DATA: DRIVE TYPE	FAN DATA: SPEED (RPM)	MOTOR DATA: SIZE (HP)	MOTOR DATA: SPEED (RPM)	MOTOR DATA: VOLTS/ PHASE	APPROX. OPERATING WEIGHT(LB.)	BASIS OF DESIGN	MODEL
EF-1	PROCESS	PROCESS ROOM	CENTRIFUGAL	5670	.3	18.2	BELT	845	2	930	480/3	200	GREENHECK	CWB
EF-2	PROCESS	PROCESS ROOM	CENTRIFUGAL	5670	.3	18.2	BELT	845	2	930	480/3	200	GREENHECK	CWB
EF-3	PROCESS	PROCESS ROOM	CENTRIFUGAL	5670	.3	18.2	BELT	845	2	930	480/3	200	GREENHECK	CWB

AIR DEVICE SCHEDULE

MARK	SERVICE	TYPE	FACE APPEARANCE	FACE SIZE (IN.)	THROW PATTERN	MATERIAL	FINISH	MANUFACTURER	MODEL	NOTES
A	SUPPLY	MOUNTED TO DUCT	VERTICAL BLADES	AS INDICATED	DOUBLE DEFLECTION	ALUMINUM	MILL	TITUS	300FL	1

NOTES:
1. PROVIDE OPPOSED BLADE DAMPER.

LOUVER SCHEDULE

MARK	LOCATION	SERVICE	AIRFLOW (CFM)	MAX. FPM	MIN. FREE AREA (SQ.FT.)	MAX. PRESSURE LOSS (IN.W.G.)	SIZE LxH (INCHES)	BASIS OF DESIGN	MODEL
L-1	PROCESS ROOM	INTAKE	8500	405	21.0	0.1	72x72	RUSKIN	ESD435
L-2	PROCESS ROOM	INTAKE	8500	405	21.0	0.1	72x72	RUSKIN	ESD435

UNIT HEATER SCHEDULE

MARK	LOCATION	ELECTRICAL (KW)	AIR TEMP. RISE (DEG. F.)	FAN THROW (FT.)	FAN POWER (HP)	ELECTRICAL: V/PH	ELECTRICAL: MAX AMPS	BASIS OF DESIGN: BASIS OF DESIGN	BASIS OF DESIGN: MODEL	WT. (LBS)	NOTES
UH-1	PROCESS	10	49	18	1/30	460/3	12	Q-MARK	MUH	45	1,2,3
UH-2	PROCESS	10	49	18	1/30	460/3	12	Q-MARK	MUH	45	1,2,3
UH-3	PROCESS	10	49	18	1/30	460/3	12	Q-MARK	MUH	45	1,2,3
UH-4	PROCESS	10	49	18	1/30	460/3	12	Q-MARK	MUH	45	1,2,3
UH-5	PROCESS	10	49	18	1/30	460/3	12	Q-MARK	MUH	45	1,2,3
UH-6	PROCESS	10	49	18	1/30	460/3	12	Q-MARK	MUH	45	1,2,3
UH-7	PROCESS	10	49	18	1/30	460/3	12	Q-MARK	MUH	45	1,2,3
UH-8	PROCESS	10	49	18	1/30	460/3	12	Q-MARK	MUH	45	1,2,3

NOTES:
1. PROVIDE WALL BRACKET FOR WALL MOUNTING AND MOUNT AT 9 FT ABOVE FINISHED FLOOR.
2. PROVIDE UNIT MOUNTED T'STAT PER DETAILS.
3. UNIT SHALL BE SIZED TO PRODUCE SCHEDULED VALUES AT A 7,500 FT ELEVATION.

MOTOR OPERATED DAMPER SCHEDULE

MARK	LOCATION	SERVICE	ELECTRICAL VOLTS/PH	SIZE: WIDTH	SIZE: HEIGHT	BASIS OF DESIGN	MODEL
MOD-1	PROCESS	L-1	24	72	72	RUSKIN	VCD
MOD-2	PROCESS	L-2	24	72	72	RUSKIN	VCD

FILTER SCHEDULE

MARK	LOCATION	TYPE	MERV RATING	FACE SIZE (IN.)	MANUFACTURER	NOTES
FI-1	MOD-1	2" THROWAWAY	8	9-24x24, 3-12x24	FARR	1, 2
FI-2	MOD-2	2" THROWAWAY	8	9-24x24, 3-12x24	FARR	1, 2

NOTES:
1. PROVIDE SLIDE RACK FOR EACH HORIZONTAL FILTER.
2. BLANK OFF UNUSED PORTION

LANL BUILDING OFFICIAL
BY RAtwood
DATE 1-26-12
APPROVED
REVIEWED FOR LANL STANDARDS COMPLIANCE PER ISD 341-2, CH 10

BRIAN C. ALLENBRIGHT NEW MEXICO 18175 PROFESSIONAL ENGINEER 11-10-11

NO	DATE	CLASS REV	DESCRIPTION	DWN	VER	CHKD	SUB	APP

HDR ENGINEERING INC.
2155 LOUISIANA BLVD., NE
SUITE 9000
ALBUQUERQUE, NM 87110
MAIN: (505) 830-5400 FAX:
(505) 830-5454

SERF EXPANSION

MECHANICAL EQUIPMENT SCHEDULE

BLDG. 3093 TA-03

DRAWN S.G.
DESIGN B.A.
CHECKED J.C.
DATE 11-10-11

SUBMITTED
APPROVED FOR RELEASE

Los Alamos NATIONAL LABORATORY PO Box 1663 Los Alamos, New Mexico 87545

SHEET M-7000
46 OF 72

CLASSIFICATION UNCLASSIFIED
DATE 1/25/2012
PROJECT ID 102310
DRAWING NO C-55752
REV 0

ECN-11-TA-03-1398-0000-0265

C:\pwworking\phx\d0224125\102310-M-7000-R0.dwg, Jan 16, 2012 @ 8:43am

SYMBOL LEGEND

(NOT ALL SYMBOLS WILL APPLY TO THIS PROJECT)

SYMBOL	DESCRIPTION
	EXISTING
	REMOVE
	NEW WORK
	HIDDEN OR BURIED
	HOMERUN CONDUIT – GROUND – PHASE – SWITCHED – NEUTRAL – ISOLATED GROUND
	FLEXIBLE CONDUIT
	CONDUIT TURNING DOWN
	CONDUIT TURNING UP
	CONDUIT UP AND DOWN
	CONDUIT SEAL
	CONDUIT CAP
480V 600A	BUSWAY WITH DESCRIPTION
G	GROUNDING CONDUCTOR
6 X 24	CABLE TRAY WITH DESCRIPTION
	CEILING JUNCTION BOX
	WALL JUNCTION BOX
	DUPLEX RECEPTACLE OUTLET
	SINGLE RECEPTACLE OUTLET
	DOUBLE DUPLEX RECEPTACLE OUTLET
GFCI WP	GROUND FAULT CIRCUIT INTERRUPTER DUPLEX OUTLET WITH WEATHERPROOF COVER
	SPLIT WIRED DUPLEX RECEPTACLE
IG	DUPLEX ISOLATED GROUND
A	SPECIAL PURPOSE OUTLET – USE SUBSCRIPT TO IDENTIFY TYPE IN SPECS
A	FLOOR RECEPTACLE OUTLET USE SUBSCRIPT TO IDENTIFY TYPE IN SPECS
	RECEPTACLE RACEWAY
$a	SINGLE POLE SWITCH – USE SUBSCRIPT TO DESIGNATE CONTROL OF PARTICULAR OUTLETS
$2	DOUBLE POLE SWITCH
$3	THREE-WAY SWITCH
$4	FOUR-WAY SWITCH
$WP	WEATHERPROOF SWITCH
$K	KEY OPERATED SWITCH
600	DIMMER SWITCH – NUMBER INDICATES WATTAGE
M	OCCUPANCY SENSING SWITCH
P	PHOTOCELL
6 30	REMOTE CONTROL SWITCH 6 POLE, 30 AMPS
A 1, b	FLUORESCENT LUMINAIRE A=FIXTURE TYPE 1=CIRCUIT NUMBER b=SWITCH CONTROLLING FIXTURE
	FLUORESCENT STRIP LUMINAIRE
	WALL MOUNTED FLUORESCENT LUMINAIRE
	CEILING MOUNTED LUMINAIRE
	WALL MOUNTED LUMINAIRE
	EMERGENCY LUMINAIRE
	LIGHT POLE WITH LUMINAIRE

SYMBOL	DESCRIPTION
	EMERGENCY LIGHTING UNIT
	CEILING MOUNTED EXIT SIGN – ARROW AS INDICATED
	TWO FACED EXIT SIGN
	WALL MOUNTED EXIT SIGN
	SWITCHBOARD, POWER PANELBOARD
LP–XX	LIGHTING PANELBOARD
T	TRANSFORMER
30	NON–FUSIBLE SAFETY SWITCH (NUMBER INDICATES SWITCH SIZE)
F 40/60	FUSED SAFETY SWITCH (NUMBERS INDICATE FUSE/SWITCH SIZES)
20	COMBINATION MAGNETIC STARTER AND CIRCUIT BREAKER 2 – INDICATES NEMA STARTER SIZE 20 – INDICATES CIRCUIT BREAKER TRIP
	MAGNETIC STARTER
ASD	ADJUSTABLE SPEED DRIVE
3	MOTOR (NUMBER INDICATES HP)
	BELL
H	HORN "H" OR SIREN "S"
	BUZZER
	PUSHBUTTON
F	MANUAL PULL STATION
V	FIRE ALARM HORN (V=VISUAL SIGNAL)
P	PHOTOELECTRIC SMOKE DETECTOR
I	IONIZATION SMOKE DETECTOR
T	THERMAL DETECTOR
P D	DUCT SMOKE DETECTOR (PHOTOELECTRIC)
DH	MAGNETIC DOOR HOLDER
PS	PRESSURE SWITCH
FS	FLOW SWITCH
S	VALVE SUPERVISORY SWITCH
FACP	FIRE ALARM CONTROL PANEL
F	FIRE ALARM RACEWAY
S	CEILING SPEAKER
S	WALL SPEAKER
	TELECOMMUNICATIONS OUTLET
	FLOOR MOUNTED TELECOMMUNICATIONS OUTLET
	INTERCOM OUTLET
T	TELECOMMUNICATIONS RACEWAY
D	PROTECTED TRANSMISSION SYSTEM (PTS) DATA TERMINAL CONNECTION
TV	TELEVISION OUTLET
CR	CARD READER
ES	ELECTRIC DOOR STRIKE
DC	DOOR CONTACTS
RAP	REMOTE ACCESS PANEL
HG	HAND GEOMETRY UNIT
MD	MOTION DETECTOR
C	CLOSED CIRCUIT TV CAMERA

SYMBOL	DESCRIPTION
100/3	MEDIUM VOLTAGE DISCONNECT SWITCH
600	MEDIUM VOLTAGE DRAWOUT CIRCUIT BREAKER
480V 208Y/120V 500 KVA	TRANSFORMER (DELTA–WYE CONN.)
	SHIELDED TRANSFORMER
1000/1600	DRAWOUT CIRCUIT BREAKER (TRIP/FRAME)
300/400 GFI	CIRCUIT BREAKER (TRIP/FRAME) WITH GROUND FAULT INTERRUPTER
7/MCP	MOTOR CIRCUIT PROTECTOR
30/MCP	MOTOR CONTROL CENTER STARTER UNIT
	FUSE
	GROUND
G	GENERATOR
3000/5 3	CURRENT TRANSFORMER (NUMBERS INDICATE RATIO AND QUANTITY)
3	POTENTIAL TRANSFORMER (NUMBER INDICATES QUANTITY)
AS	AMMETER SWITCH
VS	VOLTMETER SWITCH
V	VOLTMETER
A	AMMETER
KW	KILOWATT METER
N E L	TRANSFER SWITCH
K_1	KEY INTERLOCK #1
	BATTERY
	NORMALLY CLOSED CONTACT
	NORMALLY OPEN CONTACT
	PROTECTIVE RELAY, SOLENOID COIL
	THERMAL OVERLOAD
	CONNECTION
	CROSS, NO CONNECTION
	SURGE ARRESTOR
TVSS	TRANSIENT VOLTAGE SURGE SUPPRESSOR
	CAPACITOR
CR_1	CONTROL RELAY #1
	BUS PLUG CIRCUIT BREAKER
T	THERMOSTAT
1	KEYED NOTE DESIGNATION
3	ELECTRICAL EQUIPMENT DESIGNATION (SEE SCHEDULE)
5	MECHANICAL EQUIPMENT DESIGNATION (SEE SCHEDULE)
7	NAMEPLATE DESIGNATION (SEE SCHEDULE)
WP AFF	WEATHERPROOF ABOVE FINISH FLOOR

NON–STANDARD (NS) SYMBOLS

SYMBOL	DESCRIPTION
LP–XX	LIGHTING PANEL – 250 VOLTS TO 600 VOLTS
	INSTRUMENTATION AND CONTROLS CONNECTION
RVSS	REDUCED VOLTAGE STEADY STATE
	EQUIPMENT CONNECTION
E	CONCRETE ENCASED DUCTBANK
E	DIRECT BURRIED CONDUIT(S)
	LETTER DESIGNATION E – ELECTRICAL F – FIRE ALARM T – TELECOMMUNICATIONS
LP	LIGHTNING PROTECTION GROUND LOOP
OH	OVERHEAD ELECTRIC LINE
S_M	MOTOR RATED SWITCH
SPD	SURGE PROTECTIVE DEVICE

NO	DATE	CLASS REV	DESCRIPTION	DWN	VER	CHKD	SUB	APP

HDR ENGINEERING INC.
2155 LOUISIANA BLVD., NE
SUITE 9500
ALBUQUERQUE, NM 87110
MAIN: (505) 830-5400 FAX: (505) 830-5454

SERF EXPANSION

ELECTRICAL LEGEND

BLDG. 3093 TA–03

DRAWN B.Q. DESIGN D.B. CHECKED P.D. DATE 11–10–11

SUBMITTED APPROVED FOR RELEASE

Los Alamos NATIONAL LABORATORY PO Box 1663 Los Alamos, New Mexico 87545

SHEET E–0001 47 OF 72

CLASSIFICATION UNCLASSIFIED REVIEWER DATE 1/25/2012

PROJECT ID 102310 DRAWING NO C–55752 REV 0

LANL BUILDING OFFICIAL APPROVED 105567 1-26-12 12-008

REVIEWED FOR LANL STANDARDS COMPLIANCE PER ISO 241 - 2 CH 10

DAVID F. BESINGER NEW MEXICO 12027 PROFESSIONAL ENGINEER 11-10-11

C:\pwworking\pnx\d0224126\102310-E-0001-R0.dwg, Jan 16, 2012 @ 8:49am

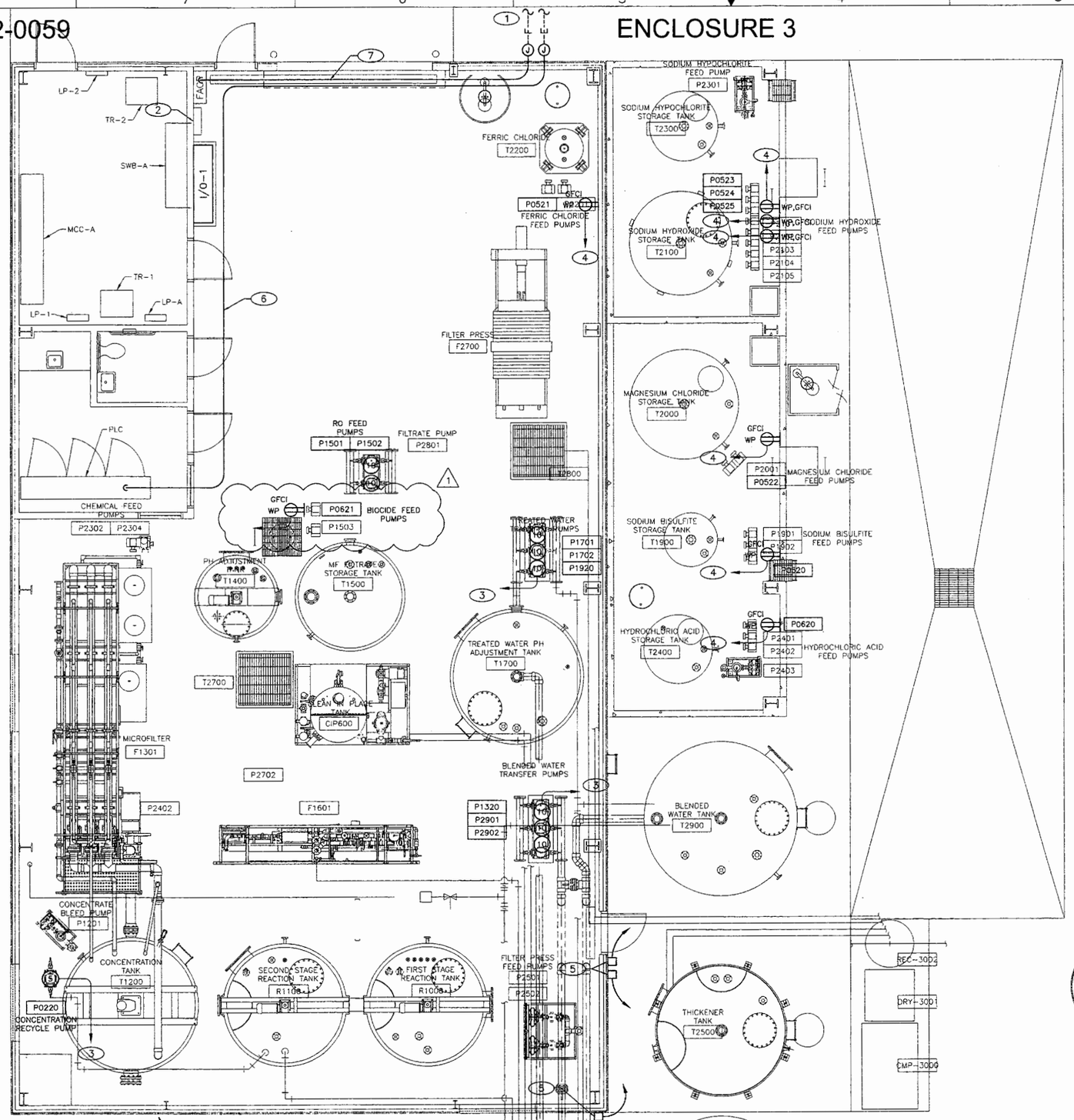

EXISTING SERF BUILDING ELECTRICAL PLAN

GENERAL NOTES

1. IF THIS SHEET IS NOT 24"x36" THEN IT IS A REDUCED SIZED PLOT. USE GRAPHIC SCALE ACCORDINGLY.
2. REFER TO SHEET E-6002 FOR EXISTING SERF ELECTRICAL ONE-LINE DIAGRAM.
3. VERIFY EXISTING CONDITIONS PRIOR TO ROUGH-IN OF ELECTRICAL EQUIPMENT AND ROUTING OF CONDUITS INDICATED ON THIS SHEET.
4. REFER TO SHEET E-6007 FOR SCADA CONFIGURATION.
5. REFER TO SHEET E-6008 FOR REMOTE I/O PANEL NO. 1 ONE-LINE DIAGRAM.
6. ANY DIMENSIONS SHOWN ARE APPROXIMATE. CONTRACTOR TO FIELD MODIFY LOCATION OF ALL ELECTRICAL INFRASTRUCTURE INCLUDING BUT NOT LIMITED TO ELECTRICAL CONDUIT, PANELS AND EQUIPMENT AS NEEDED TO COORDINATE WITH INSTALLATION OF OTHER PROJECT ELEMENTS.

KEYED NOTES

1. REFER TO ELECTRICAL SITE PLAN SHEET E-1001 FOR CONTINUATION.
2. EXISTING TELECOMMUNICATIONS CABINET AND PLYWOOD BACKBOARD.
3. CIRCUIT TO STARTER WITHIN EXISTING MOTOR CONTROL CENTER "MCC-A".
4. PROVIDE DEDICATED CIRCUIT TO NEAREST AVAILABLE 20A, 1-POLE SPARE CIRCUIT BREAKER. VERIFY AMPACITY AND NUMBER OF EXISTING SPARE CIRCUIT BREAKERS AND SPACES, PRIOR TO ROUGH-IN.
5. CONNECTION TO HEAT TRACING SYSTEM. ROUGH-IN AND CONNECT PER MANUFACTURER INSTRUCTIONS. ROUTE TO NEW 20A, 1-POLE GFEPCI TYPE BREAKER WITHIN PANEL LP-2. VERIFY AMPACITY AND NUMBER OF EXISTING SPARE CIRCUIT BREAKERS AND SPACES, PRIOR TO ROUGH-IN.
6. CONDUIT AND CABLING TO REMOTE I/O PANEL NO. 2 AND RO PLC NO. 1 VIA CONTROLS JUNCTION BOX WITHIN SERF EXPANSION BUILDING.
7. ROUTE 1" CONDUIT AND CABLING TO FIRE ALARM PANEL WITHIN SERF EXPANSION BUILDING.

NO	DATE	CLASS REV	DESCRIPTION	DWN	VER	CHKD	SUB	APP
1	12/9/11		LANL REVIEW COORDINATION UPDATE	BQ	-	-	-	-

HDR ENGINEERING INC.
2155 LOUISIANA BLVD., NE
SUITE 9000
ALBUQUERQUE, NM 87110
MAIN: (505) 830-6400 FAX: (505) 830-6464

SERF EXPANSION

EXISTING SERF BUILDING ELECTRICAL PLAN

BLDG. 3093 TA-03

DRAWN	B.Q.
DESIGN	D.B.
CHECKED	P.B.
DATE	11-10-11

SUBMITTED APPROVED FOR RELEASE

Los Alamos NATIONAL LABORATORY PO Box 1663 Los Alamos, New Mexico 87545

SHEET E-1000 48 OF 72

CLASSIFICATION UNCLASSIFIED REVIEWED BY DATE 1/25/2012

PROJECT ID 102310 DRAWING NO C-55752 REV 1

LANL BUILDING OFFICIAL RA Wood 105567 1-26-12 12-008 APPROVED

DAVID F. BESINGER NEW MEXICO 12027 PROFESSIONAL ENGINEER 11-10-11

ECN-11-TA-03-1398-0000-0265

C:\pwworking\phx\d0224126\102310-E-1000-R1.dwg, Jan 16, 2012 @ 8:50am

ENV-RCRA-12-0059

ENCLOSURE 3

LAUR-12-10463

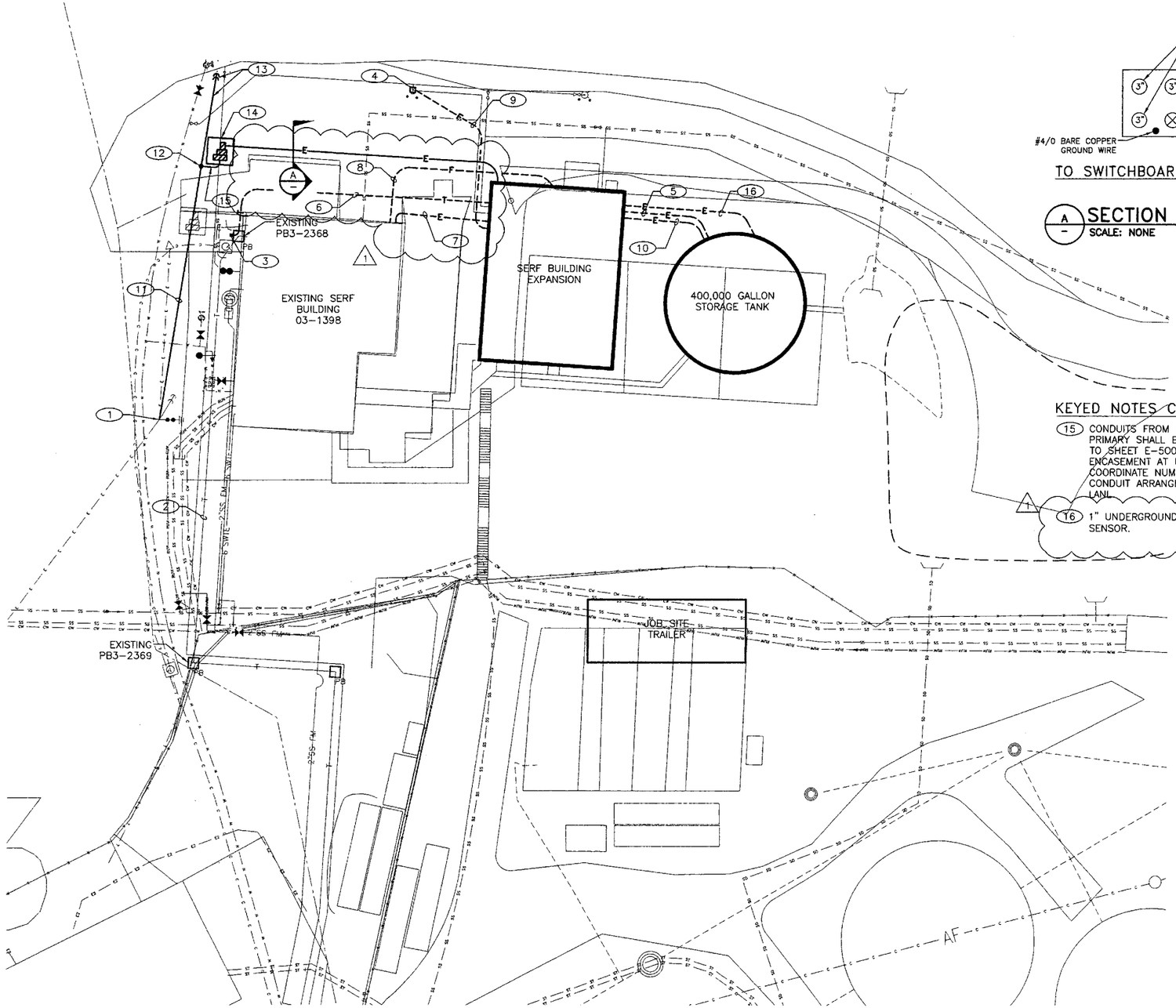

ELECTRICAL SITE PLAN

1"=20'-0"

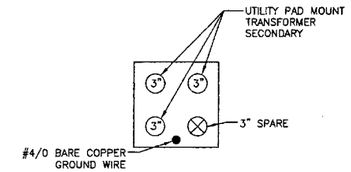

TO SWITCHBOARD 'SWB-B'

A SECTION
SCALE: NONE

GENERAL NOTES

1. IF THIS SHEET IS NOT 24"x36" THEN IT IS A REDUCED SIZE PLOT. USE GRAPHIC SCALE ACCORDINGLY.
2. CONTRACTOR SHALL VERIFY EXISTING SITE UTILITIES PRIOR TO ROUGH-IN OF NEW SITE WORK. COORDINATE EXACT ROUTING OF DUCTBANKS AND UNDERGROUND CONDUITS WITH UTILITIES AND PHYSICAL SITE. REFER TO SHEET E-5001 FOR DUCT BANK AND DIRECT BURIED CONDUIT DETAILS.
3. ANY DIMENSIONS SHOWN ARE APPROXIMATE. CONTRACTOR TO FIELD MODIFY LOCATION OF ALL ELECTRICAL INFRASTRUCTURE INCLUDING BUT NOT LIMITED TO ELECTRICAL CONDUIT, PANELS AND EQUIPMENT AS NEEDED TO COORDINATE WITH INSTALLATION OF OTHER PROJECT ELEMENTS.

KEYED NOTES

1. APPROXIMATE LOCATION OF EXISTING UTILITY POLE.
2. EXISTING SPARE 2" INNER DUCT SHALL BE UTILIZED FOR FIBER OPTIC CABLE FOR TELECOMMUNICATIONS. FIBER OPTIC CABLING FURNISHED AND INSTALLED BY LANL.
3. TERMINATE GROUND IN PULL BOX AND TRANSITION FROM PULL BOX TO TELECOMMUNICATIONS CONDUIT. ROUTE GROUND CONDUCTOR TO GROUND BAR WITHIN TELECOMMUNICATIONS CABINET WITHIN SERF EXPANSION BUILDING. GROUND CONDUCTOR SHALL BE #4/0 BARE COPPER.
4. STUB-UP CONDUIT AND CONNECT TO PIV VALVE.
5. 1" UNDERGROUND CONDUIT FOR TANK LEVEL CONTROLS.
6. NEW 4" PVC UNDERGROUND CONDUIT FOR TELECOMMUNICATIONS WITH THREE (3) 1 1/4" INNER DUCTS AND PULL ROPE IN EACH. ROUTE FROM EXISTING PULL BOX PB3-2368 TO TELECOMMUNICATIONS BACKBOARD WITHIN SERF EXPANSION BUILDING. TELECOMMUNICATIONS CABLES FURNISHED AND INSTALLED BY LANL.
7. ROUTE 2-2" UNDERGROUND CONDUITS, ONE FOR CABLING AND ONE FOR SPARE TO CONTROLS JUNCTION BOX WITHIN SERF EXPANSION BUILDING.
8. ROUTE 1" UNDERGROUND CONDUIT AND CABLING TO NEW FIRE ALARM CONTROL PANEL WITHIN SERF EXPANSION BUILDING.
9. ROUTE 1/2" UNDERGROUND CONDUIT AND WIRING FROM TAMPER SWITCH AT PIV VALVE TO FIRE RISER LOCATION WITHIN SERF EXPANSION BUILDING.
10. 1" UNDERGROUND CONDUIT FOR SPARE.
11. NEW OVERHEAD 13.2KV LINE FURNISHED AND INSTALLED BY LANL.
12. NEW UTILITY POLE AND PRIMARY RISER AND CONDUIT STUBS INTO TRANSFORMER PRIMARY FURNISHED AND INSTALLED BY LANL. VERIFY EXACT LOCATION AND REQUIREMENTS OF UTILITY POLE WITH LANL.
13. NEW DOWN GUY AND ANCHOR FURNISHED AND INSTALLED BY LANL.
14. NEW PAD MOUNT UTILITY TRANSFORMER 'TR-B' FURNISHED, INSTALLED AND ANCHORED BY LANL. COORDINATE EXACT LOCATION AND REQUIREMENTS OF TRANSFORMER WITH LANL. FURNISH AND INSTALL NEW TRANSFORMER CONCRETE PAD IN ACCORDANCE WITH LANL STANDARD DRAWING ST-G4010-38-R1.

KEYED NOTES CONTINUED

15. CONDUITS FROM POLE RISER TO TRANSFORMER PRIMARY SHALL BE CONCRETE ENCASED. REFER TO SHEET E-5001 FOR TYPCIAL CONRECTE ENCASEMENT AT UTILITY POLE DETAIL. COORDINATE NUMBER OF CONDUITS AND EXACT CONDUIT ARRANGEMENT WITHIN DUCT BANK WITH LANL.
16. 1" UNDERGROUND CONDUIT FOR TEMPERATURE SENSOR.

NO	DATE	CLASS REV	DESCRIPTION	DWN	VER	CHKD	SUB	APP
1	12/9/11		LANL REVIEW COORDINATION UPDATE	BQ	-	-	-	-

HDR ENGINEERING INC.
2155 LOUISIANA BLVD., NE
SUITE 9500
ALBUQUERQUE, NM 87110
MAIN: (505) 830-5400 FAX: (505) 830-5454

SERF EXPANSION

SERF BUILDING
ELECTRICAL SITE PLAN

BLDG. 3093 TA-03

DRAWN	B.Q.
DESIGN	B.D.
CHECKED	P.D.
DATE	11-10-11

SUBMITTED

APPROVED FOR RELEASE

Los Alamos NATIONAL LABORATORY
P.O. Box 1663
Los Alamos, New Mexico 87545

SHEET E-1001
49 OF 72

CLASSIFICATION UNCLASSIFIED
REVIEWER
DATE 1/25/2012

PROJECT ID 102310
DRAWING NO C-55752
REV 1

LANL BUILDING OFFICIAL
BY R. Trout
105567
DATE 1-26-12
LOG 12-005
APPROVED

REVIEWED FOR LANL STANDARDS CO-PLANCE PER ISD 341-2, CH. 18

DAVID F. BESINGER
NEW MEXICO
12027
PROFESSIONAL ENGINEER
11-10-11

ECN-11-TA-03-1398-0000-0265

C:\pwworking\pha\d0224126\102310-E-1001-R1.dwg, Jan 16, 2012 @ 8:51am

ENV-RCRA-12-0059

ENCLOSURE 3

LAUR-12-10463

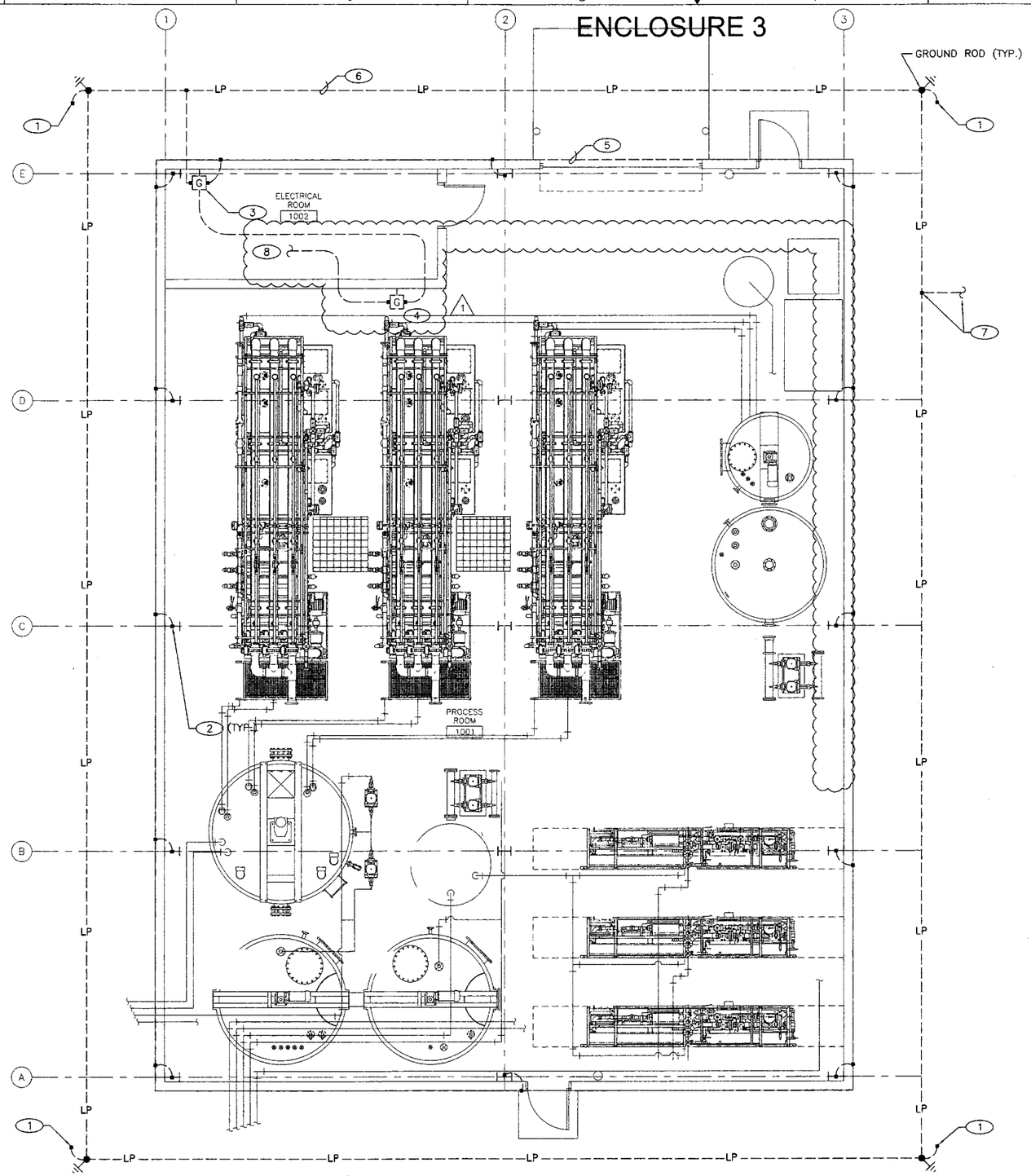

GROUNDING PLAN

1/4"=1'-0"

GENERAL NOTES

1. IF THIS SHEET IS NOT 24"x36" THEN IT IS A REDUCED SIZED PLOT. USE GRAPHIC SCALE ACCORDINGLY.
2. CONNECTIONS TO THE MAIN GROUND BAR SHALL BE COMPRESSION LUGS WITH TAMPER PROOF NUTS AND BOLTS.
3. ANY DIMENSIONS SHOWN ARE APPROXIMATE. CONTRACTOR TO FIELD MODIFY LOCATION OF ALL ELECTRICAL INFRASTRUCTURE INCLUDING BUT NOT LIMITED TO ELECTRICAL CONDUIT, PANELS AND EQUIPMENT AS NEEDED TO COORDINATE WITH INSTALLATION OF OTHER PROJECT ELEMENTS.

KEYED NOTES

1. FURNISH AND INSTALL DOWN CONDUCTOR UP TO ROOF. CONNECT DOWN CONDUCTOR TO GROUND LOOP WITH COMPRESSON FITTINGS THAT MEET REQUIREMENTS OF IEEE 837 OR USE EXOTHERMIC WELDS. SEE SHEET E-1003 FOR CONTINUATION.
2. BOND STRUCTURAL STEEL TO PERIMETER GROUNDING ELECTRODE USING EXOTHERMINC WELDS OR COMPRESSON FITTINGS THAT MEET REQUIREMENTS OF IEEE 837.
3. MOUNT MAIN GROUND BAR ASSEMBLY AT LOCATION SHOWN 24" AFF. EXTEND GROUND CONDUCTOR TO BUILDING GROUNDING ELECTRODE SYSTEM.
4. MOUNT GROUND BAR BELOW TELECOMMUNICATIONS BACKBOARD. COORDINATE LOCATION OF TELECOMMUNICATIONS BACKBOARD WITH LANL, PRIOR TO ROUGH-IN.
5. CONCRETE ENCASED #4/0 MAIN GROUNDING ELECTRODE. BOND REINFORCING BARS IN BOTTOM OF GRADE BEAM WITH #4/0 GROUND CABLE TO MAIN GROUNDING ELECTRODE BY USING COMPRESSION FITTINGS THAT MEET REQUIREMENTS OF IEEE 837 OR USE EXOTHERMIC WELDS.
6. FURNISH AND INSTALL GROUND LOOP AROUND PERIMETER OF BUILDING. PROVIDE #4/0 BARE STRANDED SOFT COPPER. LOCATE CONDUCTOR 5 FEET OUTSIDE OF BUILDING PERIMETER AND 3 FEET MINIMUM BELOW GRADE.
7. BOND EFFLUENT GROUND STORAGE TANK TO PERIMETER GROUND LOOP. REFER TO SHEET E-1007 FOR CONTINUATION.
8. TERMINATE #4/0 GROUND FROM 4" PVC TELECOMMUNICATIONS CONDUIT TO TELECOMMUNICATIONS GROUND BAR.

NO	DATE	CLASS REV	DESCRIPTION	DWN	VER	CHKD	SUB	APP
1	12/9/11	~~-~~ UNCLASSIFIED	LANL REVIEW COORDINATION UPDATE	BQ	-	-	-	-

HDR ENGINEERING INC.
2155 LOUISIANA BLVD., NE
SUITE 8500
ALBUQUERQUE, NM 87110
MAIN: (505) 830-6400 FAX: (505) 830-6454

LANL BUILDING OFFICIAL APPROVED
BY: R. Hurst
ID: 105567
DATE: 1-26-12
JOB: 12-008
REVIEWED FOR LANL STANDARDS COMPLIANCE PER ISO 741 - 2, CP 18

DAVID F. BESINGER NEW MEXICO 12027 PROFESSIONAL ENGINEER
11-10-11

SERF EXPANSION

SERF BUILDING GROUNDING PLAN

BLDG. 3093 TA-03

DRAWN	B.Q.
DESIGN	D.B.
CHECKED	P.D.
DATE	09-22-11

SUBMITTED

APPROVED FOR RELEASE

Los Alamos NATIONAL LABORATORY
PO Box 1663
Los Alamos, New Mexico 87545

SHEET E-1002 50 OF 72

CLASSIFICATION UNCLASSIFIED REVIEWER DATE 1/25/2012

PROJECT ID 102310 DRAWING NO. C-55752 REV 1

ECN-11-TA-03-1398-0000-0265

C:\pwworking\phx\d0224126\102310-E-1002-R1.dwg, Jan 16, 2012 @ 8:54am

ENV-RCRA-12-0059

ENCLOSURE 3

LAUR-12-10463

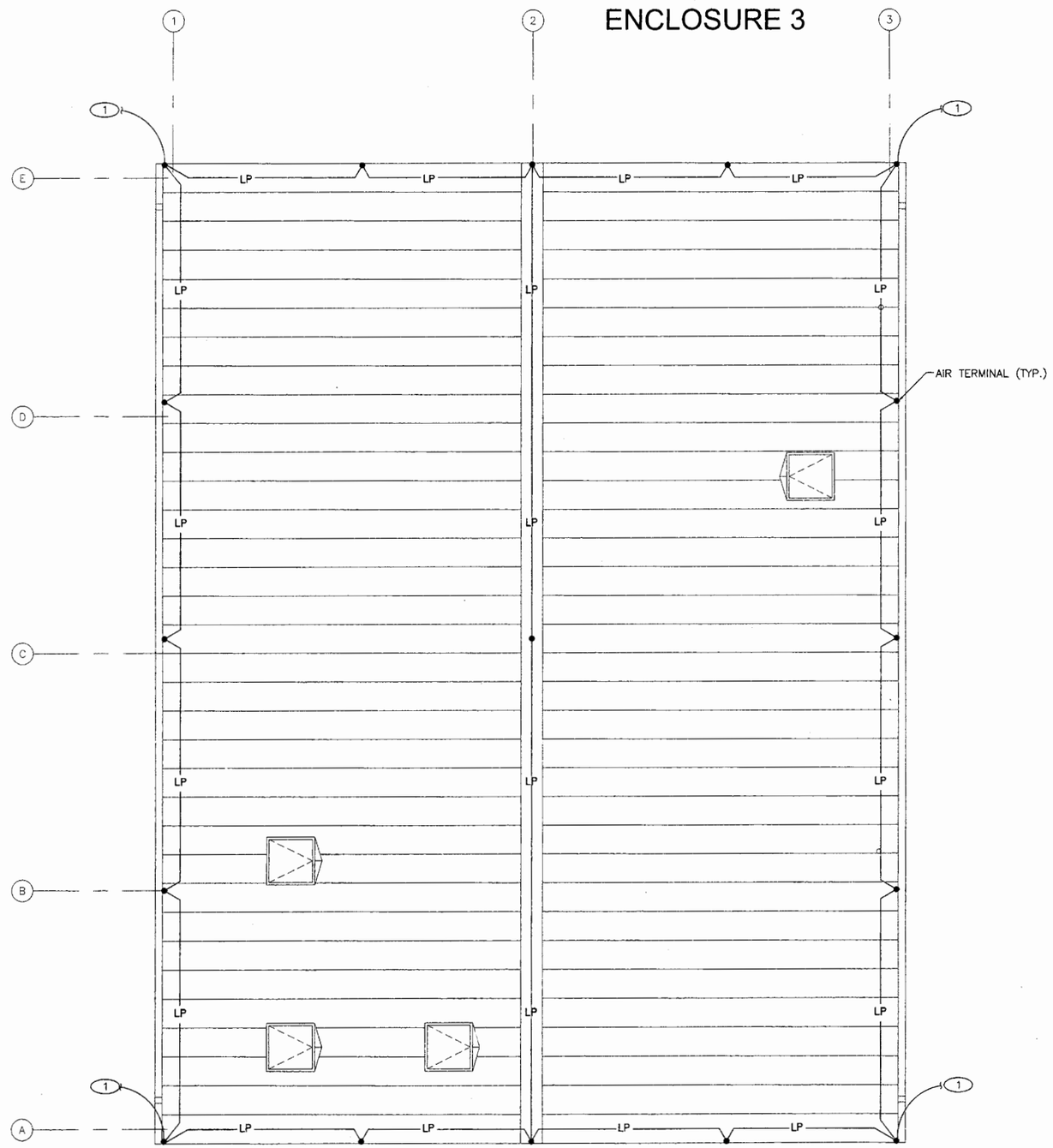

LIGHTNING PROTECTION PLAN

2' 1 0 2' 4' 6'
1/4"=1'-0"

GENERAL NOTES

1. IF THIS SHEET IS NOT 24"x36" THEN IT IS A REDUCED SIZE PLOT. USE GRAPHIC SCALE ACCORDINGLY.
2. ANY DIMENSIONS SHOWN ARE APPROXIMATE. CONTRACTOR TO FIELD MODIFY LOCATION OF ALL ELECTRICAL INFRASTRUCTURE INCLUDING BUT NOT LIMITED TO ELECTRICAL CONDUIT, PANELS AND EQUIPMENT AS NEEDED TO COORDINATE WITH INSTALLATION OF OTHER PROJECT ELEMENTS.

KEYED NOTES

1. ROUTE CONDUCTORS EXPOSED ON EXTERIOR SURFACE OF BUILDING. SEE SHEET E-1002 FOR CONTINUATION.

NO	DATE	CLASS REV	DESCRIPTION	DWN	VER	CHKD	SUB	APP
1	12/9/11		LANL REVIEW COORDINATION UPDATE	BQ	–	–	–	–

HDR ENGINEERING INC.
2155 LOUISIANA BLVD., NE
SUITE 9500
ALBUQUERQUE, NM 87110
MAIN: (505) 830-5400 FAX: (505) 830-5454

SERF EXPANSION

SERF BUILDING
LIGHTNING PROTECTION PLAN

BLDG. 3093 TA-03

DRAWN	B.Q.
DESIGN	D.B.
CHECKED	P.D.
DATE	11-10-11

SUBMITTED

APPROVED FOR RELEASE

Los Alamos NATIONAL LABORATORY
PO Box 1663
Los Alamos, New Mexico 87545

SHEET E-1003
51 OF 72

CLASSIFICATION UNCLASSIFIED
REVIEWER
DATE 1/25/2012
PROJECT ID 102310
DRAWING NO C-55752
REV 1

LANL BUILDING OFFICIAL
RA Grant
105367
1-26-12
12-008
APPROVED
REVIEWED FOR LANL STANDARDS COMPLIANCE PER ISD 341-1, CH. 18

DAVID F. BESINGER
NEW MEXICO
12027
PROFESSIONAL ENGINEER
11-10-11

ECN-11-TA-03-1398-0000-0265

C:\pwworking\phx\d0224126\102310-E-1003-R1.dwg, Jan 16, 2012 @ 8:54am

ENV-RCRA-12-0059

ENCLOSURE 3

LAUR-12-10463

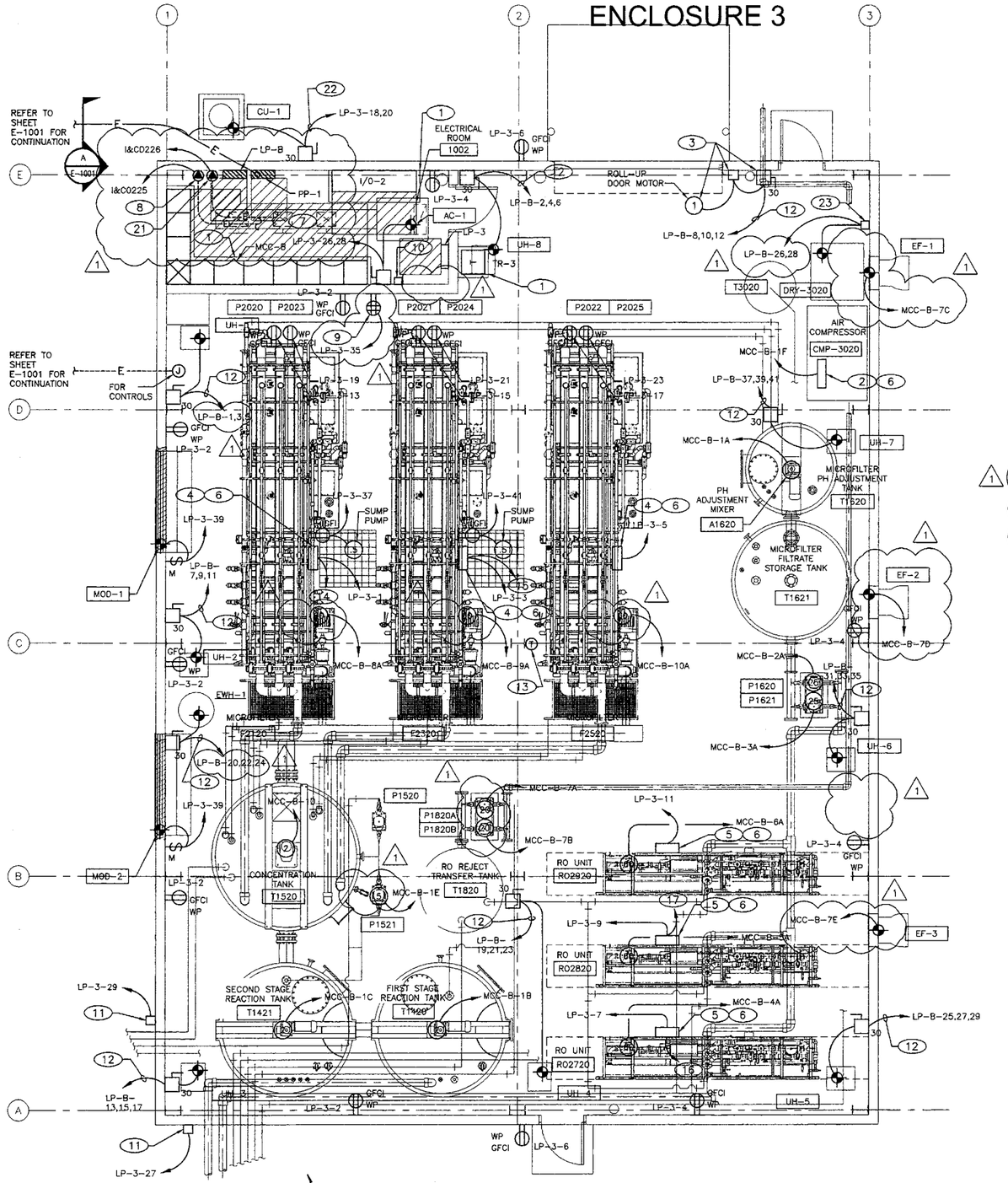

POWER PLAN

1/4"=1'-0"

GENERAL NOTES

1. IF THIS SHEET IS NOT 24"X36" THEN IT IS A REDUCED SIZE PLOT. USE GRAPHIC SCALE ACCORDINGLY.
2. REFER TO SHEET E-6003 SWITCHBOARD "SWB-B" ONE-LINE DIAGRAM.
3. REFER TO SHEET E-6004 MOTOR CONTROL CENTER "MCC-B" ONE-LINE DIAGRAM.
4. REFER TO SHEET E-6007 FOR SCADA CONFIGURATION.
5. REFER TO SHEET E-6009 FOR REMOTE I/O PANEL NO. 2 ONE-LINE DIAGRAM.
6. INSTRUMENTATION DEVICES FURNISHED BY SIEMENS ARE NOT SHOWN ON THIS SHEET. COORDINATE EXACT LOCATION OF INSTRUMENTATION DEVICES WITH SIEMENS AND PROCESS DRAWINGS, PRIOR TO ROUGH-IN. REFER TO SHEETS E-6008 AND E-6009 FOR ELECTRICAL REQUIREMENTS.
7. REFER TO SHEETS E-6010 AND E-6011 FOR CONTROL SCHEMATICS.
8. ANY DIMENSIONS SHOWN ARE APPROXIMATE. CONTRACTOR TO FIELD MODIFY LOCATION OF ALL ELECTRICAL INFRASTRUCTURE INCLUDING BUT NOT LIMITED TO ELECTRICAL CONDUIT, PANELS AND EQUIPMENT AS NEEDED TO COORDINATE WITH INSTALLATION OF OTHER PROJECT ELEMENTS.
9. CONTRACTOR SHALL LOCATE AND ORIENT ELECTRICAL EQUIPMENT AS REQUIRED TO MEET CLEARENCES PER NEC IF THERE ANY DEVIATIONS IN ELECTRICAL EQUIPMENT SHOWN.

KEYED NOTES

1. CONCRETE EQUIPMENT PAD PROVIDED BY OTHERS.
2. AIR COMPRESSOR CONTROL PANEL.
3. INSTALL SAFETY DISCONNECT SWITCH AND DOOR CONTROL STATION AT 4'-0" A.F.F. INSTALL CONDUIT TO MOTOR AND STARTER PER MANUFACTURER INSTRUCTIONS.
4. MICROFILTER CONTROL PANEL BY SIEMENS.
5. RO UNIT CONTROL PANEL BY SIEMENS.
6. FURNISHED AND INSTALLED ON SKID BY SIEMENS.
7. ROUTE TO EFFLUENT STORAGE TANK. REFER TO SHEET E-1007 FOR CONTINUATION.
8. STORAGE TANK LEVEL CONTROLS.
9. DOUBLE DUPLEX RECEPTACLE MOUNTED AJACENT TO TELECOMMUNICATIONS BACKBOARD, UPPER LEFT CORNER.
10. LIGHTING CONTACTOR 277V, 20A, 4-POLE. REFER TO SHEET E-6010 EXTERIOR LIGHTING CONTROL DIAGRAM.
11. CONNECTION TO HEAT TRACING SYSTEM. ROUGH-IN AND CONNECT PER MANUFACTURER INSTRUCTIONS.
12. 3#12, #12G, 3/4"C.
13. THERMOSTAT FOR CONTROL OF EXHAUST FANS EF-1, EF-2, AND EF-3.
14. ROUTE THICK SHIELDED COAXIAL CONTROLNET CABLE TO MICROFILTRATION CONTROL PANEL NO. 2 IN 1" CONDUIT.
15. ROUTE THICK SHIELDED COAXIAL CONTROLNET CABLE TO MICROFILTRATION CONTROL PANEL NO. 3 IN 1" CONDUIT.

KEYED NOTES CONTINUED

16. ROUTE THICK SHIELDED TWINAXIAL DATA HIGHWAY PLUS CABLE TO RO PLC NO. 2 IN 1" CONDUIT.
17. ROUTE THICK SHIELDED TWINAXIAL DATA HIGHWAY PLUS CABLE TO RO PLC NO. 3 IN 1" CONDUIT.
18. NOT USED.
19. NOT USED.
20. NOT USED.
21. STORAGE TANK TEMPERATURE TRANSMITTER.
22. 2#8, #10G, 3/4"C.
23. RELOCATED TRANSFORMER '4TF' TO FEED RELOCATED AIR DRYER.

NO	DATE	CLASS REV	DESCRIPTION	DWN	VER	CHKD	SUB	APP
1	12/9/11	ES UNCLASSIFIED -	LANL REVIEW COORDINATION UPDATE	BQ				

HDR ENGINEERING INC.
2155 LOUISIANA BLVD., NE
SUITE 9500
ALBUQUERQUE, NM 87110
MAIN: (505) 830-5400 FAX: (505) 830-5494

SERF EXPANSION

SERF BUILDING POWER PLAN

BLDG. 3093 TA-03

DRAWN	B.Q.
DESIGN	D.B.
CHECKED	P.D.
DATE	11-10-11

SUBMITTED

APPROVED FOR RELEASE

Los Alamos NATIONAL LABORATORY PO Box 1663 Los Alamos, New Mexico 87545

SHEET E-1004

52 OF 72

CLASSIFICATION UNCLASSIFIED

DATE 12/5/2012

PROJECT ID 102310

DRAWING NO C-55752

REV 1

LANL BUILDING OFFICIAL APPROVED

REVIEWED FOR LANL STANDARDS COMPLIANCE PER ISO 241-2 OR 18

DAVID F. BESINGER NEW MEXICO 12027 PROFESSIONAL ENGINEER 11-10-11

ECN-11-TA-03-1398-0000-0265

C:\pwworking\phx\u0224126\102310-E-1004-R1.dwg, Jan 16, 2012 @ 4:19pm

ENV-RCRA-12-0059

ENCLOSURE 3

LAUR-12-10463

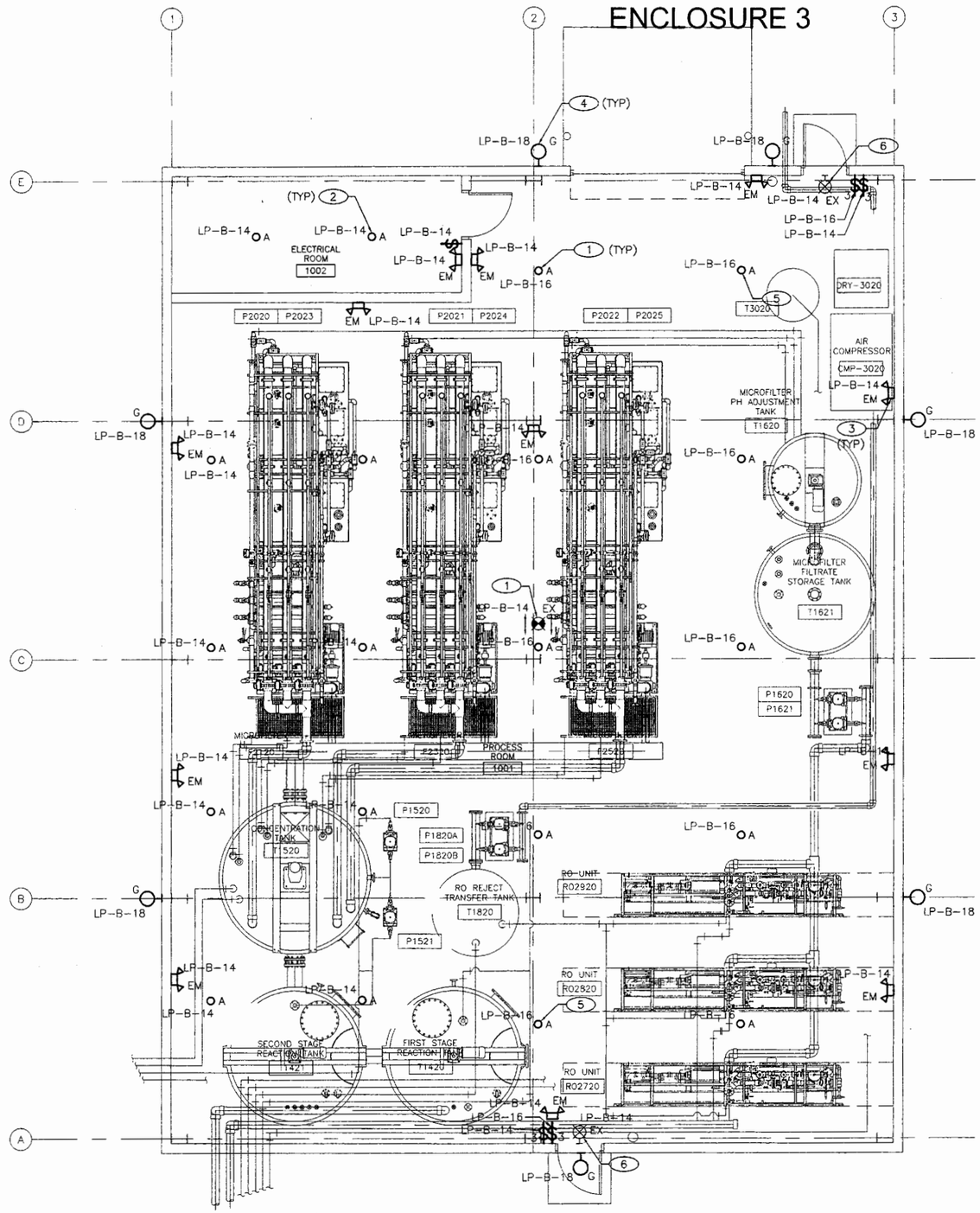

LIGHTING PLAN

1/4"=1'-0"

GENERAL NOTES

1. IF THIS SHEET IS NOT 24"x36" THEN IT IS A REDUCED SIZE PLOT. USE GRAPHIC SCALE ACCORDINGLY.
2. REFER TO SHEET E-7000 FOR LIGHTING FIXTURE SCHEDULE.
3. CIRCUIT EXTERIOR TYPE 'G' FIXTURES INDICATED ON THIS SHEET TO DESIGNATED PANEL AND CIRCUIT NUMBER VIA CONTACTOR LOCATED WITHIN ELECTRICAL ROOM. REFER TO SHEET E-1004 FOR LOCATION.
4. COORDINATE FIXTURE LOCATIONS WITH MECHANICAL SYSTEMS, SUCH AS HVAC EQUIPMENT, DUCTWORK AND PIPING, PRIOR TO ROUGH-IN.
5. ANY DIMENSIONS SHOWN ARE APPROXIMATE. CONTRACTOR TO FIELD MODIFY LOCATION OF ALL ELECTRICAL INFRASTRUCTURE INCLUDING BUT NOT LIMITED TO ELECTRICAL CONDUIT, PANELS AND EQUIPMENT AS NEEDED TO COORDINATE WITH INSTALLATION OF OTHER PROJECT ELEMENTS.

KEYED NOTES

1. MOUNT BOTTOM OF TYPE 'A' FIXTURE AT 14'-0" ABOVE FINISHED FLOOR.
2. MOUNT BOTTOM OF TYPE 'A' FIXTURE AT 12'-0" ABOVE FINISHED FLOOR.
3. MOUNT BOTTOM OF TYPE 'EM' FIXTURE AT 7'-6" ABOVE FINISHED FLOOR. FURNISH AND INSTALL NEMA L7-20R RECEPTACLE WITHIN 12 INCHES OF FIXTURE. FURNISH AND INSTALL CORD WITH NEMA L7-20R PLUG ON TYPE "EM" FIXTURE.
4. MOUNT BOTTOM OF TYPE 'G' FIXTURE AT 9'-0" ABOVE GRADE.
5. FIXTURE IS UNSWITCHED.
6. WALL MOUNT FIXTURE 1'-0" ABOVE TOP OF DOOR FRAME.

NO	DATE	CLASS REV	DESCRIPTION	DWN	VER	CHKD	SUB	APP
1	12/9/11		LANL REVIEW COORDINATION UPDATE	BO	-	-	-	-

HDR ENGINEERING INC.
2155 LOUISIANA BLVD., NE
SUITE 9000
ALBUQUERQUE, NM 87110
MAIN: (505) 830-5400 FAX: (505) 830-5454

SERF EXPANSION

SERF BUILDING
LIGHTING PLAN

BLDG. 3093 TA-03

DRAWN	B.O.
DESIGN	D.B.
CHECKED	P.D.
DATE	11-10-11

SUBMITTED

APPROVED FOR RELEASE

Los Alamos NATIONAL LABORATORY PO Box 1663 Los Alamos, New Mexico 87545

SHEET E-1005

53 OF 72

CLASSIFICATION UNCLASSIFIED REVIEWER DATE 1/25/2012

PROJECT ID 102310

DRAWING NO C-55752

REV 1

LANL BUILDING OFFICIAL APPROVED 105567 1-26-12 12-008

DAVID F. BESINGER NEW MEXICO 12027 PROFESSIONAL ENGINEER 11-10-11

ECN-11-TA-03-1398-0000-0265

C:\pwworking\pha\d0224126\102310-E-1005-R1.dwg, Jan 16, 2012 @ 8:57am

ENV-RCRA-12-0059

ENCLOSURE 3

LAUR-12-10463

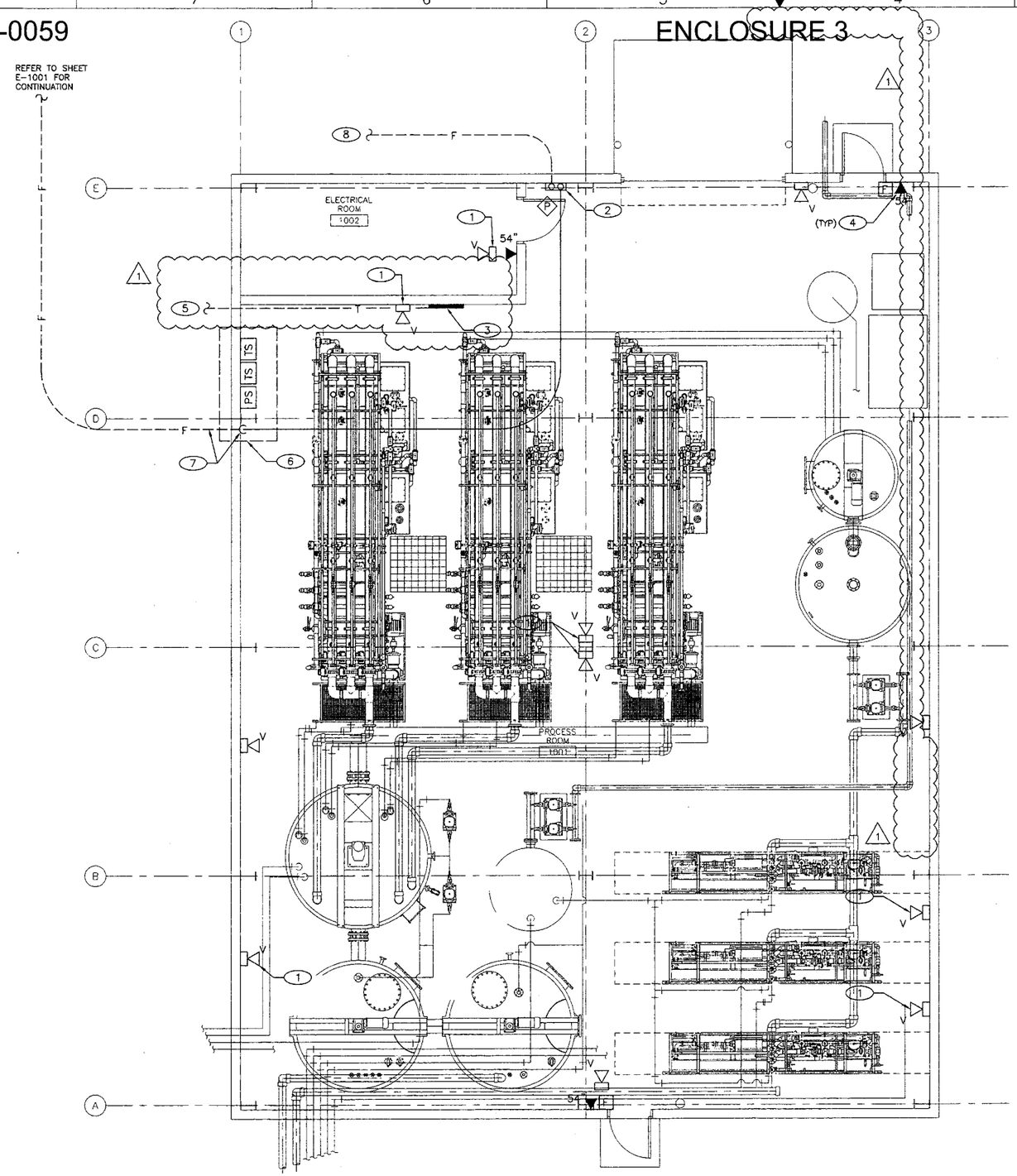

SPECIAL SYSTEMS PLAN

1/4"=1'-0"

GENERAL NOTES

1. IF SHEET IS NOT 24"x36" THEN IT IS A REDUCED SIZE PLOT. USE GRAPHIC SCALE ACCORDINGLY.
2. FIRE ALARM SYSTEM SHALL BE DESIGNED BY FACTORY AUTHORIZED LANL APPROVED FIRE ALARM SUBCONTRACTOR.
3. REFER TO FIRE ALARM RISER DIAGRAM SHEET E-6000.
4. ANY DIMENSIONS SHOWN ARE APPROXIMATE. CONTRACTOR TO FIELD MODIFY LOCATION OF ALL ELECTRICAL INFRASTRUCTURE INCLUDING BUT NOT LIMITED TO ELECTRICAL CONDUIT, PANELS AND EQUIPMENT AS NEEDED TO COORDINATE WITH INSTALLATION OF OTHER PROJECT ELEMENTS.
5. CONTRACTOR SHALL LOCATE AND ORIENT ELECTRICAL EQUIPMENT AS REQUIRED TO MEET CLEARENCES PER NEC IF THERE ANY DEVIATIONS IN ELECTRICAL EQUIPMENT SHOWN.

KEYED NOTES

1. DEVICE IS STROBE ONLY.
2. REMOTE FIRE ALARM CONTROL PANEL. REFER TO FIRE ALARM RISER DIAGRAM SHEET E-6000.
3. PROVIDE 8'x4'x3/4" PLYWOOD BACKBOARD WITH COATS OF FIRE RETARDANT PAINT. COORDINATE EXACT STUB UP LOCATION WITH LANL, PRIOR TO ROUGH-IN.
4. ROUTE SEPARATE 1 1/4" CONDUIT AND HOMERUN FROM EACH TELEPHONE/DATA OUTLET TO TELECOMMUNICATIONS CABINET.
5. ROUTE COMMUNICATIONS DUCT FROM EXISTING PULLBOX PB3-2368 TO INSIDE TELECOMMUNICATIONS CABINET, BOTTOM LEFT CORNER. REFER TO ELECTRICAL SITE PLAN SHEET E-1001 FOR CONTINUATION.
6. LOCATION OF FIRE RISER.
7. ROUTE CONDUIT AND WIRING FROM FIRE ALARM CONTROL PANEL OVERHEAD TO FIRE RISER LOCATION AND THEN UNDERGROUND TO TAMPER SWITCH AT PIV.
8. ROUTE CONDUIT AND CABLING TO MAIN FIRE ALARM CONTROL PANEL WITHIN EXISTING SERF BUILDING. SIZE CONDUIT AND CABLING AS REQUIRED. REFER TO ELECTRICAL SITE PLAN SHEET E-1001 FOR CONTINUATION.

NO	DATE	CLASS REV	DESCRIPTION	DWN	VER	CHKD	SUB	APP
1	12/9/11		LANL REVIEW COORDINATION UPDATE	BQ	-	-	-	-

HDR ENGINEERING INC.
2155 LOUISIANA BLVD., NE
SUITE 9500
ALBUQUERQUE, NM 87110
MAIN (505) 830-5400 FAX: (505) 830-5454

SERF EXPANSION

SERF BUILDING
SPECIAL SYSTEMS PLAN

BLDG. 3093 TA-03

DRAWN	B.Q.
DESIGN	D.B.
CHECKED	P.B.
DATE	11-10-11

SUBMITTED

APPROVED FOR RELEASE

Los Alamos NATIONAL LABORATORY
PO Box 1663
Los Alamos, New Mexico 87545

SHEET E-1006
54 OF 72

CLASSIFICATION UNCLASSIFIED REVIEWER DATE 12/5/2012

PROJECT ID 102310
DRAWING NO C-55752
REV 1

LANL BUILDING OFFICIAL APPROVED
105567
1-26-12
12-008

DAVID F. BESINGER NEW MEXICO 12027 PROFESSIONAL ENGINEER
11-10-11

ECN-11-TA-03-1398-0000-0265

C:\pwworking\phx\d0224126\102310-E-1006-R1.dwg, Jun 16, 2012 @ 8:58am

ENV-RCRA-12-0059

ENCLOSURE 3

LAUR-12-10463

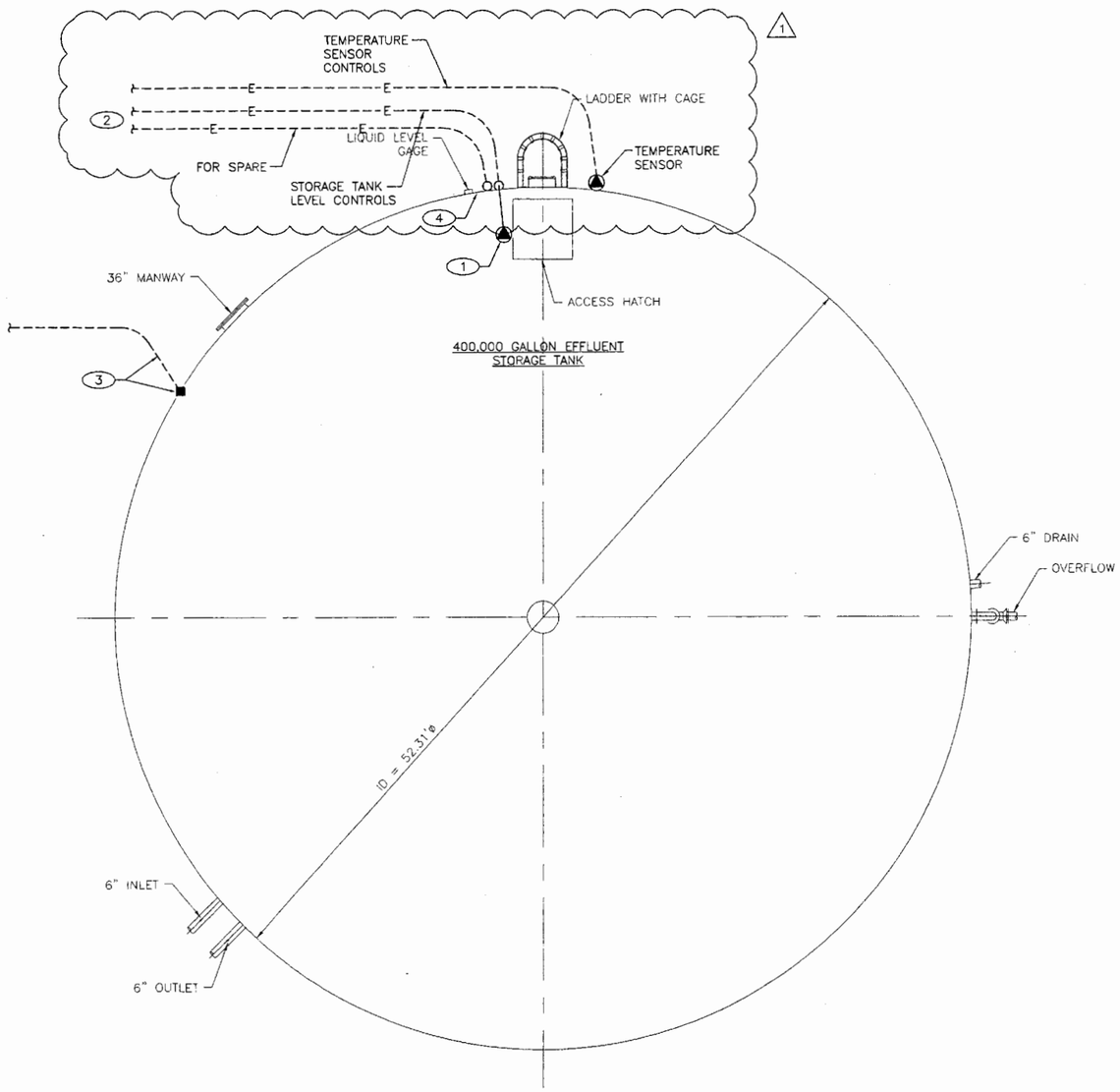

STORAGE TANK POWER PLAN

0' 1' 2' 4' 6' 8'
1/4"=1'-0"

GENERAL NOTES:

1. IF THIS SHEET IS NOT 24"X36", THEN IT IS A REDUCED SIZE PLOT. USE GRAPHIC SCALE ACCORDINGLY.
2. ANY DIMENSIONS SHOWN ARE APPROXIMATE. CONTRACTOR TO FIELD MODIFY LOCATION OF ALL ELECTRICAL INFRASTRUCTURE INCLUDING BUT NOT LIMITED TO ELECTRICAL CONDUIT, PANELS AND EQUIPMENT AS NEEDED TO COORDINATE WITH INSTALLATION OF OTHER PROJECT ELEMENTS.

KEYED NOTES

1. STORAGE TANK LEVEL CONTROLS.
2. REFER TO SHEET E-1004 FOR CONTINUATION.
3. BOND TANK TO SERF EXPANSION BUILDING PERIMETER GROUND LOOP WITH COMPRESSION FITTINGS THAT MEET REQUIREMENTS OF IEEE 837 OR USE EXOTHERMIC WELDS. REFER TO SHEET E-1002 FOR CONTINUATION.
4. STUB-UP SPARE CONDUIT 6" A.F.G.

NO	DATE	CLASS REV	DESCRIPTION	DWN	VER	CHKD	SUB	APP
1	12/9/11		LANL REVIEW COORDINATION UPDATE	BQ	-	-	-	-

HDR ENGINEERING INC.
2155 LOUISIANA BLVD., NE
SUITE 9000
ALBUQUERQUE, NM 87110
MAIN: (505) 830-5400 FAX: (505) 830-5454

SERF EXPANSION

400,000 GALLON STORAGE TANK POWER PLAN

BLDG. 3093 TA-03

DRAWN	B.Q.
DESIGN	D.B.
CHECKED	P.D.
DATE	11-10-11

SUBMITTED

APPROVED FOR RELEASE

Los Alamos NATIONAL LABORATORY PO Box 1663 Los Alamos, New Mexico 87545

SHEET E-1007

55 OF 72

CLASSIFICATION UNCLASSIFIED

REVIEWER

DATE 1/25/2012

PROJECT ID 102310

DRAWING NO C-55752

REV 1

LANL BUILDING OFFICIAL APPROVED 105567 1-26-12 12-008

REVIEWED FOR LANL STANDARDS COMPLIANCE PER ES 341-2 OR 18

DAVID F. BESINGER NEW MEXICO 12027 PROFESSIONAL ENGINEER 11-10-11

ECN-11-TA-03-1398-0000-0265

C:\pwworking\phx\d0224126\102310-E-1007-R1.dwg, Jan 16, 2012 @ 9:38am

ENV-RCRA-12-0059 ENCLOSURE 3 LAUR-12-10463

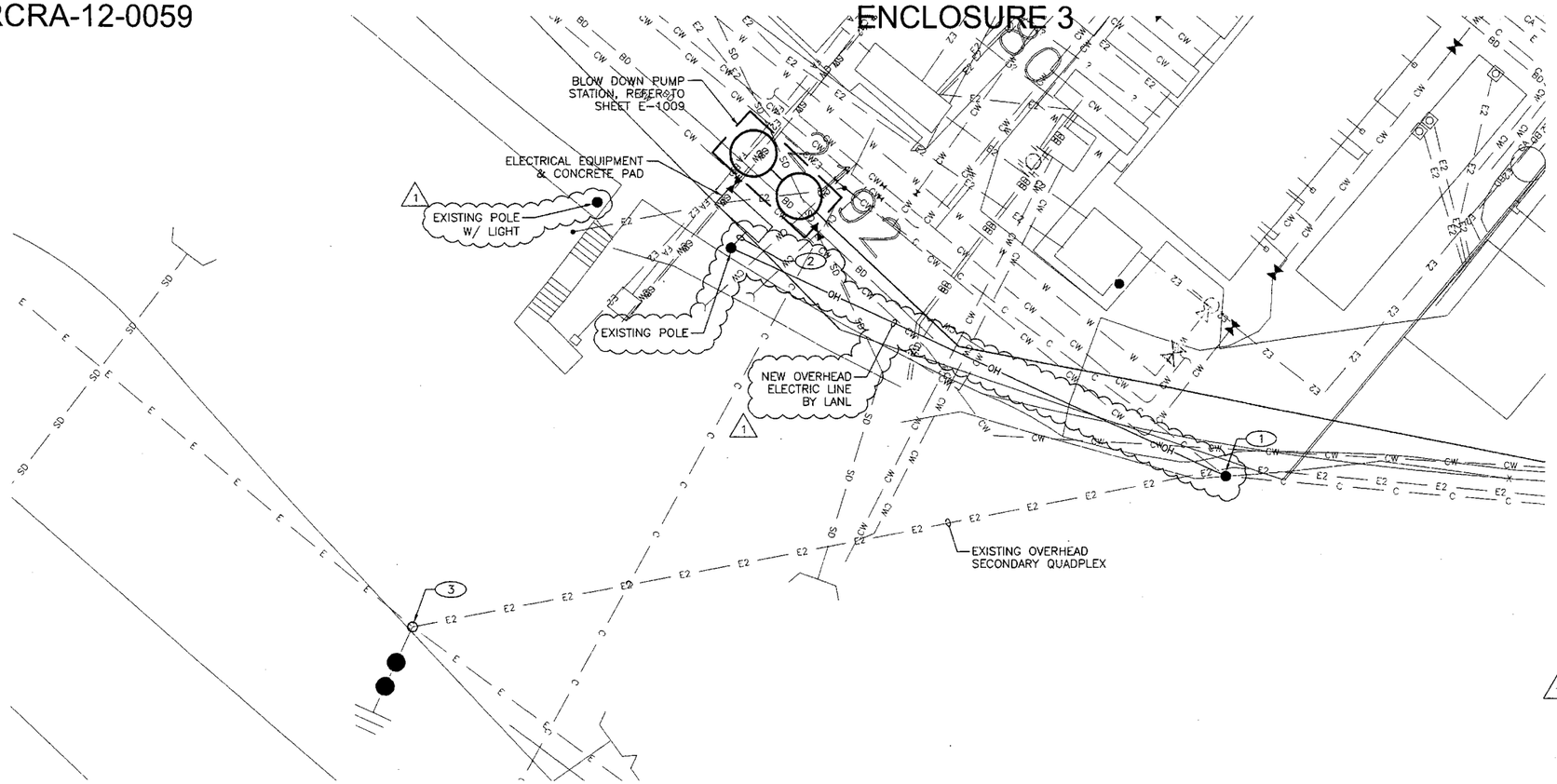

SITE PLAN

10' 5' 0 5' 10'
1"=10'-0"

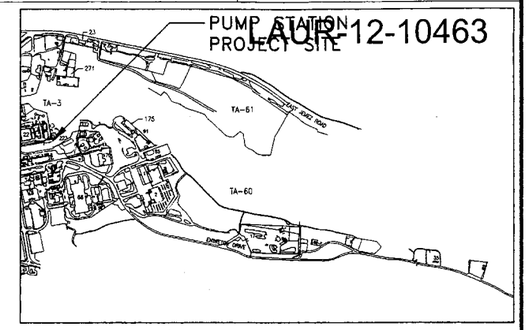

KEY PLAN

SCALE: NONE

GENERAL NOTES:

1. IF THIS SHEET IS NOT 24"X36", THEN IT IS A REDUCED SIZE PLOT. USE GRAPHIC SCALE ACCORDINGLY.
2. REFER TO SHEET E-6005 PUMP STATION ELECTRICAL ONE-LINE DIAGRAM.
3. ANY DIMENSIONS SHOWN ARE APPROXIMATE. CONTRACTOR TO FIELD MODIFY LOCATION OF ALL ELECTRICAL INFRASTRUCTURE INCLUDING BUT NOT LIMITED TO ELECTRICAL CONDUIT, PANELS AND EQUIPMENT AS NEEDED TO COORDINATE WITH INSTALLATION OF OTHER PROJECT ELEMENTS.

KEYED NOTES:

1. TIE NEW OVERHEAD ELECTRIC LINE TO EXISTING QUADPLEX ON EXISTING POLE BY LANL.
2. UNDERGROUND FEEDER AND TELECOMMUNICATION CONDUITS ROUTED FROM NEW PUMP STATION TO RISERS AND UP EXISTING POLE.
3. EXISTING 3-PH POLE-MOUNTED TRANSFORMER BANK.

NO	DATE	CLASS REV	DESCRIPTION	DWN	VER	CHKD	SUB	APP
1	12/9/11	–	LANL REVIEW COORDINATION UPDATE	BQ	–	–	–	–

HDR ENGINEERING INC.
2155 LOUISIANA BLVD., NE
SUITE 9000
ALBUQUERQUE, NM 87110
MAIN: (505) 830-5400 FAX: (505) 830-5454

SERF EXPANSION

BLOWDOWN PUMP STATION SITE PLAN

BLDG. 3093 TA-03

DRAWN	B.Q.
DESIGN	D.B.
CHECKED	P.D.
DATE	11-10-11

SUBMITTED APPROVED FOR RELEASE

Los Alamos NATIONAL LABORATORY PO Box 1663 Los Alamos, New Mexico 87545

SHEET E-1008 56 OF 72

CLASSIFICATION UNCLASSIFIED REVIEWER DATE 1/25/2012

PROJECT ID 102310 DRAWING NO C-55752 REV 1

LANL BUILDING OFFICIAL APPROVED 1-26-12 12-008

DAVID F. BESINGER NEW MEXICO 12027 PROFESSIONAL ENGINEER 11-10-11

ECN-11-TA-03-1398-0000-0265

C:\pwworking\phx\d0224126\102310-E-1008-R1.dwg, Jan 16, 2012 @ 9:40am

ENV-RCRA-12-0059

ENCLOSURE 3

LAUR-12-10463

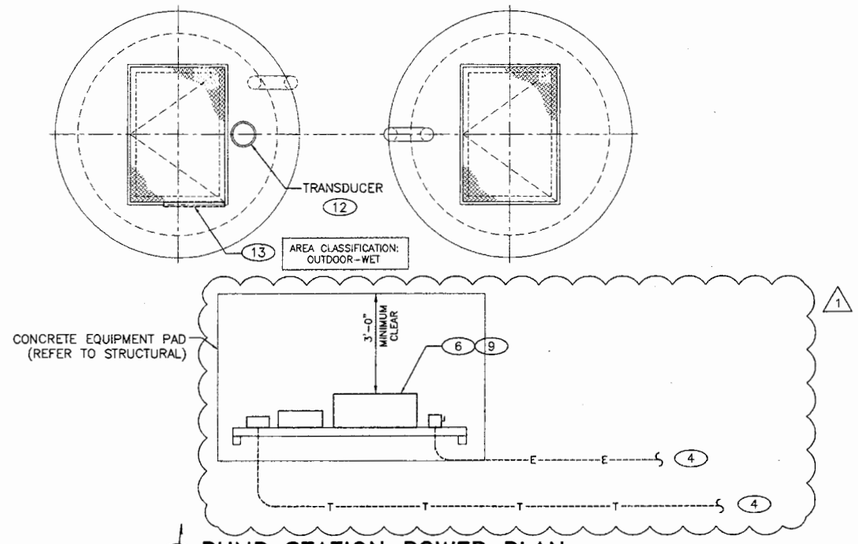

PUMP STATION POWER PLAN

SCALE: NONE

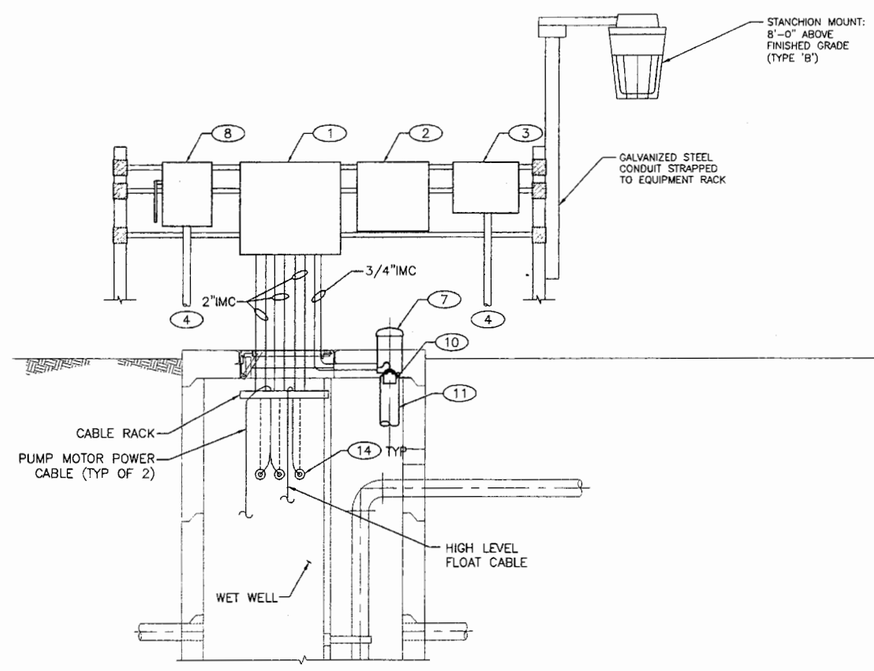

PUMP STATION AND POWER RACK DETAIL

SCALE: NONE

GENERAL NOTES

1. IF THIS SHEET IS NOT 24"X36", THEN IT IS A REDUCED SIZED PLOT. USE GRAPHIC SCALE ACCORDINGLY.
2. ALL CABLES ROUTED FROM LIFT STATION CONTROL PANEL TO PUMP POWER AND CONTROL DEVICES ARE PROVIDED MY MANUFACTURER.
3. REFER TO SHEET E-7000 FOR LIGHTING FIXTURE SCHEDULE.
4. ANY DIMENSIONS SHOWN ARE APPROXIMATE. CONTRACTOR TO FIELD MODIFY LOCATION OF ALL ELECTRICAL INFRASTRUCTURE INCLUDING BUT NOT LIMITED TO ELECTRICAL CONDUIT, PANELS AND EQUIPMENT AS NEEDED TO COORDINATE WITH INSTALLATION OF OTHER PROJECT ELEMENTS. (1)

KEYED NOTES

1. PUMP STATION CONTROL PANEL FURNISHED BY MANUFACTURER INSTALLED BY CONTRACTOR.
2. INTERFACE ALARM AND CONTROL PANEL.
3. TELEPHONE LINE GROUNDING/TERMINATOR BOX. BOND TELEPHONE GROUNDING/TERMINATOR BOX TO MAIN FUSED SERVICE DISCONNECT WITH #4/0 GROUNDING CONDUCTOR.
4. ROUTE UNDERGROUND CONDUIT TO EXISTING POLE ADJACENT TO NEW PUMP STATION. REFER TO SHEET E-1008 FOR CONTINUATION.
5. TRANSDUCER CONTRACTOR FURNISHED AND INSTALLED BY LANL UTILITIES.
6. MOUNT EQUIPMENT SHOWN ON UNISTRUT. REFER TO OUTDOOR EQUIPMENT MOUNTING DETAIL SHEET E-5000.
7. CPVC REDUCER COUPLING, PIPING AND CAP CONTRACTOR FURNISHED AND INSTALLED. SET INTO CONCRETE LID.
8. FUSED SERVICE DISCONNECT SWITCH. GROUND MAIN FUSED SERVICE DISCONNECT TO GROUNDING ELECTRODE. GROUND WITH #4/0 GROUNDING CONDUCTOR.
9. REFER TO PUMP STATION AND POWER RACK DETAIL THIS SHEET.
10. TRANSDUCER AND PLEXIGLASS CONTRACTOR FURNISHED AND INSTALLED BY LANL SUPPORT SERVICES SUBCONTRACTOR (SSS).
11. STILLING WELL, FURNISHED AND INSTALLED BY LANL SSS.
12. LOCATE TO PROVIDE CLEAR SPACE BELOW FOR INSTALLATION OF 6" PVC STILLING WELL TO BASE OF WET WELL. STILLING WELL FURNISHED AND INSTALLED BY LANL SSS. REFER TO TRANSDUCER MOUNTING DETAL SHEET E-5001.
13. LOCATE CABLE RACK ON SAME SIDE OF CONTROL PANEL. DO NOT LOCATE TRANSDUCER AND FLOAT IN DIRECT LINE WITH INLET AND DISCHARGE LINES.
14. CONDUITS FROM PUMP STATION CONTROL PANEL. SEAL OPEN ENDS WITH MASTIC WATERPROOF SEALANT.

NO	DATE	CLASS REV	DESCRIPTION	DWN	VER	CHKD	SUB	APP
1	12/9/11		LANL REVIEW COORDINATION UPDATE	BG	–	–	–	–

HDR ENGINEERING INC.
2166 LOUISIANA BLVD., NE
SUITE 9000
ALBUQUERQUE, NM 87110
MAIN (505) 830-6400 FAX: (505) 830-6454

LANL BUILDING OFFICIAL
105567
1-26-12
105567
APPROVED
REVIEWED FOR LANL STANDARDS COMPLIANCE PER IDS 341-2 CH 10

DAVID F. BESINGER
NEW MEXICO
12027
PROFESSIONAL ENGINEER
11-10-11

SERF EXPANSION

BLOWDOWN PUMP STATION POWER PLAN

BLDG. 3093 TA-03

DRAWN	B.G.
DESIGN	D.B.
CHECKED	P.O.
DATE	11-10-11

SUBMITTED

APPROVED FOR RELEASE

Los Alamos NATIONAL LABORATORY
PO Box 1663
Los Alamos, New Mexico 87545

SHEET E-1009
57 OF 72

CLASSIFICATION UNCLASSIFIED

REVIEWED

DATE 1/25/2012

PROJECT ID 102310

DRAWING NO C-55752

REV 1

ECN-11-TA-03-1398-0000-0265

C:\pwworking\phx\d0224126\102310-E-1009-R1.dwg, Jan 16, 2012 @ 9:40am

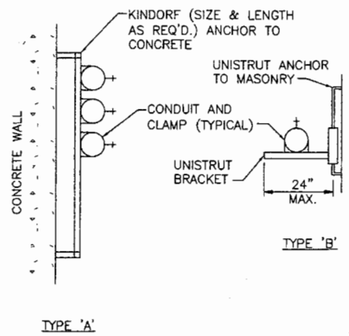

1 CONDUIT SUPPORT DETAIL
SCALE: NONE

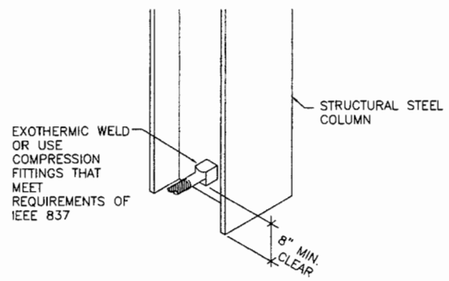

2 EXOTHERMIC WELD TO STEEL COLUMN
SCALE: NONE

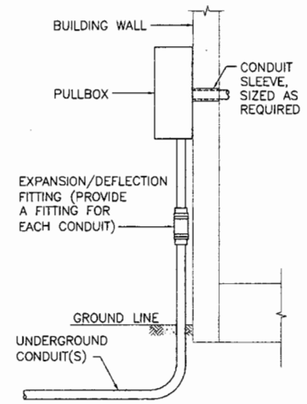

3 UNDERGROUND CONDUIT BUILDING ENTRY DETAIL
SCALE: NONE

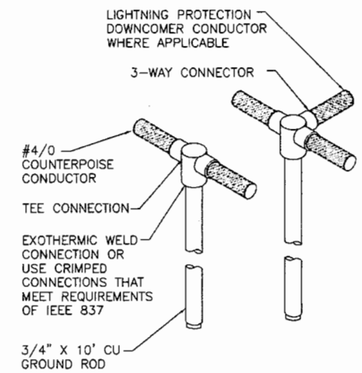

4 GROUND ROD DETAIL
SCALE: NONE

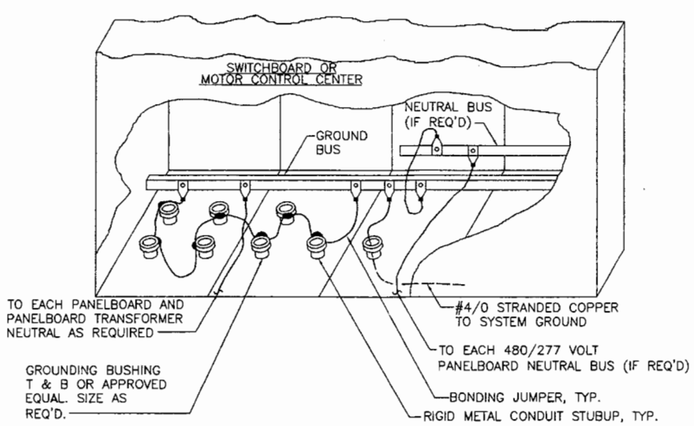

5 TYPICAL SWITCHBOARD/MCC GROUNDING DETAIL
SCALE: NONE

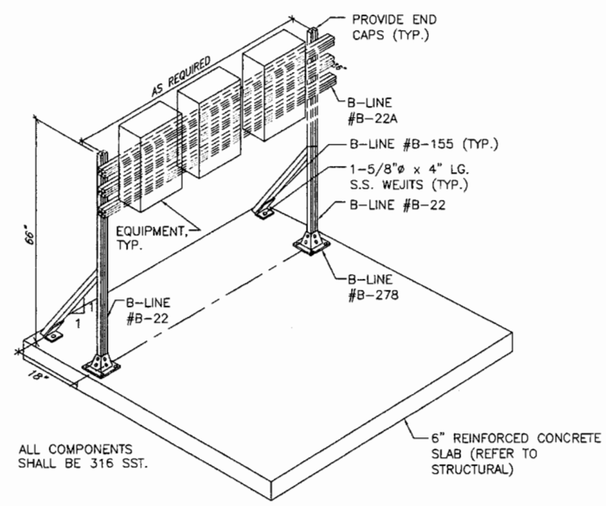

6 OUTDOOR EQUIPMENT MOUNTING DETAIL
SCALE: NONE

NO	DATE	CLASS REV	DESCRIPTION	DWN	VER	CHKD	SUB	APP

HDR ENGINEERING INC.
2155 LOUISIANA BLVD., NE
SUITE 9500
ALBUQUERQUE, NM 87110
MAIN (505) 830-5400 FAX:
(866) 830-5454

SERF EXPANSION

ELECTRICAL STANDARD DETAILS

BLDG. 3093 TA-03

DRAWN	B.O.	
DESIGN	D.B.	
CHECKED	P.D.	
DATE	11-10-11	

SUBMITTED

APPROVED FOR RELEASE

Los Alamos NATIONAL LABORATORY PO Box 1663 Los Alamos, New Mexico 87545

SHEET E-5000

58 OF 72

CLASSIFICATION UNCLASSIFIED REVIEWER DATE 12/5/2012

PROJECT ID 102310 DRAWING NO C-55752 REV 0

LANL BUILDING OFFICIAL APPROVED
NO. RA Hart
ID 105567
DATE 1-26-12
ID NO. 12-008
REVOKED FOR LANL STANDARDS COMPLIANCE PER ISO 241 / 2 CH. 18

DAVID F. BESINGER NEW MEXICO 12027 PROFESSIONAL ENGINEER 11-10-11

ECN-11-TA-03-1398-0000-0265

C:\pwworking\phx\d0224126\102310-E-5000-R0.dwg, Jan 16, 2012 @ 9:41am

GENERAL NOTES:
(*) INDICATES THAT THE DIMENSION FOR TOP, BOTTOM, AND SIDE CONCRETE COVER IS NOMINAL.

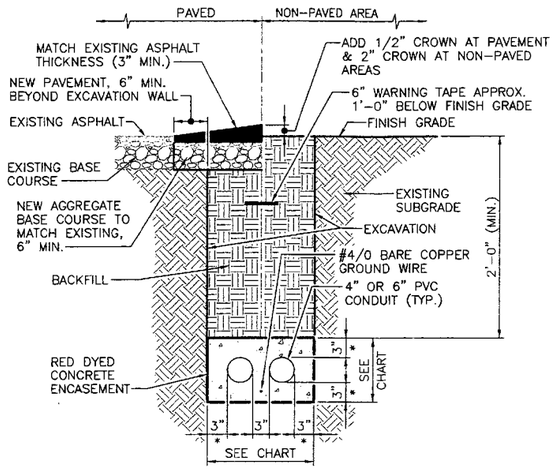

1 TYPICAL DUCTBANK INSTALLATION
SCALE: NONE

DUCTBANK SIZING CHART				
DUCTBANK	4" CONDUIT		6" CONDUIT	
	WIDTH	HEIGHT	WIDTH	HEIGHT
ONE-WAY	11"	11"	1'-1"	1'-1"
TWO-WAY	1'-6"	11"	1'-10"	1'-1"
THREE-WAY	2'-2"	11"	2'-8"	1'-1"
FOUR-WAY (SQ.)	1'-6"	1'-6"	1'-10"	1'-10"
FOUR-WAY (FLAT)	2'-9"	11"	3'-6"	1'-1"
SIX-WAY	2'-2"	1'-6"	2'-8"	1'-10"
NINE-WAY	2'-2"	2'-2"	2'-8"	2'-8"

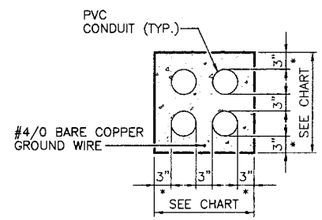

2 TYPICAL FOUR-WAY DUCTBANK (SQUARE)
SCALE: NONE

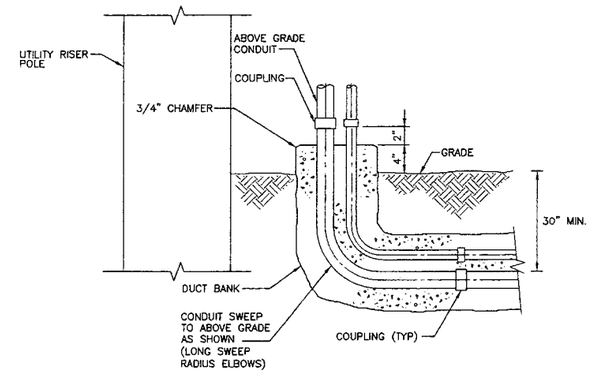

NOTE:
PRIMARY CIRCUIT CONDUITS NOT CONCRETE-ENCASED.

3 CONCRETE ENCASEMENT AT RISER POLE
SCALE: NONE

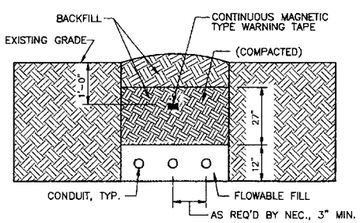

2/4 DIRECT BURIED CONDUIT DETAIL
SCALE: NONE

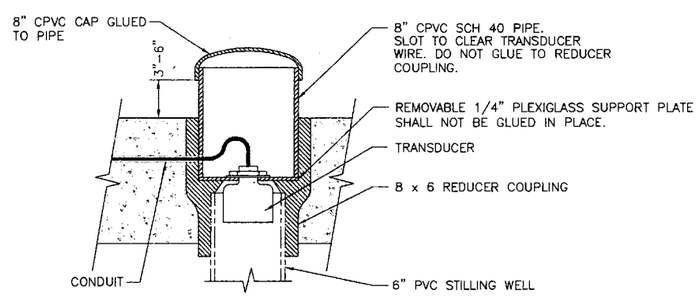

5 TRANSDUCER MOUNTING DETAIL
SCALE: NONE

LANL BUILDING OFFICIAL APPROVED
BY RA Trujillo
ID# 105567
DATE 1-26-12
DWG# 12-008
REVIEWED FOR LANL STANDARDS COMPLIANCE PER ISD 341-2, QK 19

DAVID F. BESINGER NEW MEXICO 12027 PROFESSIONAL ENGINEER
11-10-11

NO	DATE	CLASS REV	DESCRIPTION	DWN	VER	CHKD	SUB	APP

HDR ENGINEERING INC.
2155 LOUISIANA BLVD., NE
SUITE 9500
ALBUQUERQUE, NM 87110
MAIN: (505) 830-5400 FAX: (505) 830-5454

SERF EXPANSION

ELECTRICAL STANDARD DETAILS

BLDG. 3093 TA-03

DRAWN	B.G.
DESIGN	D.B.
CHECKED	P.B.
DATE	11-10-11

SUBMITTED
APPROVED FOR RELEASE

Los Alamos NATIONAL LABORATORY PO Box 1663 Los Alamos, New Mexico 87545

SHEET E-5001
59 OF 72

CLASSIFICATION UNCLASSIFIED REVIEWER DATE 1/25/2012
PROJECT ID 102310
DRAWING NO C-55752
REV 0

ECN-11-TA-03-1398-0000-0265

C:\pwworking\phx\d0224126\102310-E-5001-R0.dwg, Jan 16, 2012 @ 9:41am

KEYED NOTES

1. EXISTING MAIN FIRE ALAM CONTROL PANEL TO REMAIN. MODIFY/EXPAND EXISTING FIRE ALARM PANEL AS REQUIRED TO INTERFACE WITH NEW REMOTE FIRE ALARM CONTROL PANEL LOCATED WITHIN SERF EXPANSION BUILDING. VERIFY EXACT REQUIREMENTS WITH EQUIPMENT MANUFACTURER.

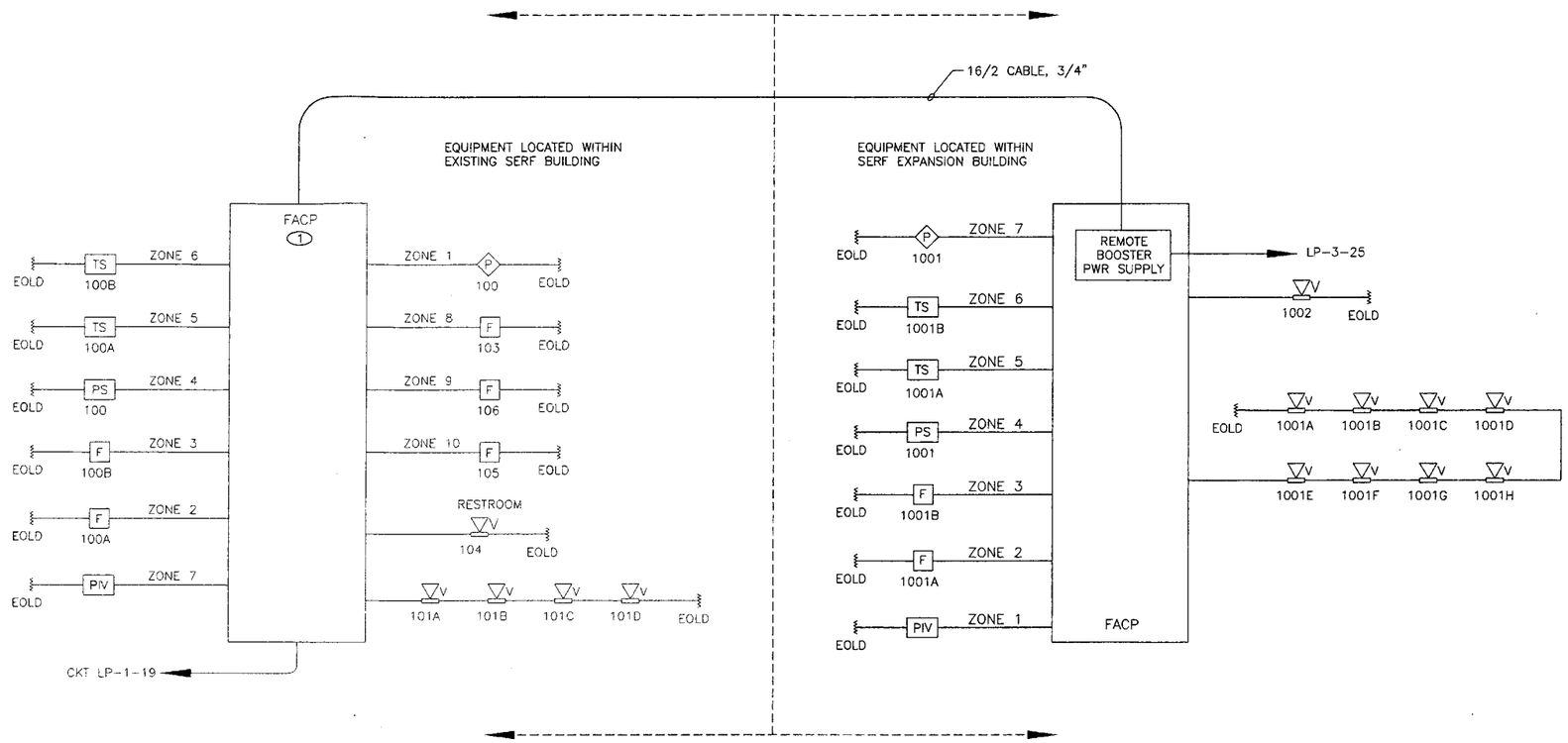

FIRE ALARM RISER DIAGRAM

SCALE: NONE

FIRE ALARM ZONE SCHEDULE (EXISTING SERF BUILDING)

ZONE	DESCRIPTION	ACTION					
		SUPV. & TROUBLE SIGNAL AT FACP	SUPV. & TROUBLE SIGNAL AT CENTRAL STATION	ALARM AT FACP	ALARM AT CENTRAL STATION	GENERAL ALARM: AUDIBLE & VISIBLE	SHUT DOWN AHU'S
1	SMOKE DETECTOR ABOVE FACP	X	X	X	X	X	
2	ROOM MANUAL PULL STATION	X	X	X	X	X	
3	ROOM MANUAL PULL STATION	X	X	X	X	X	
4	SPRINKLER PRESSURE SWITCH	X	X	X	X	X	
5	FIRE RISER TAMPER SWITCH	X	X		X		
6	FIRE RISER TAMPER SWITCH	X	X		X		
7	PIV TAMPER SWITCH	X	X		X		
8	ROOM MANUAL PULL STATION						
9	ROOM MANUAL PULL STATION						
10	ROOM MANUAL PULL STATION						
11	SPARE						
12	SPARE						

FIRE ALARM ZONE SCHEDULE (SERF EXPANSION BUILDING)

ZONE	DESCRIPTION	ACTION					
		SUPV. & TROUBLE SIGNAL AT FACP	SUPV. & TROUBLE SIGNAL AT CENTRAL STATION	ALARM AT FACP	ALARM AT CENTRAL STATION	GENERAL ALARM: AUDIBLE & VISIBLE	SHUT DOWN AHU'S
1	PIV TAMPER SWITCH	X	X		X		
2	ROOM MANUAL PULL STATION	X	X	X	X	X	
3	ROOM MANUAL PULL STATION	X	X	X	X	X	
4	SPRINKLER PRESSURE SWITCH	X	X	X	X	X	
5	FIRE RISER TAMPER SWITCH	X	X		X		
6	FIRE RISER TAMPER SWITCH	X	X		X		
7	SMOKE DETECTOR ABOVE FACP	X	X	X	X	X	
8	SPARE						
9	SPARE						

LANL BUILDING OFFICIAL APPROVED
Sig. RMoore
Ep. 105567
Date 1-26-12
Loc. 12-008
REVIEWED FOR LANL STANDARDS COMPLIANCE PER ISO 3-41 - 2, CH. 16

DAVID F. BESINGER NEW MEXICO 12027 PROFESSIONAL ENGINEER
11-10-11

NO	DATE	CLASS REV	DESCRIPTION	DWN	VER	CHKD	SUB	APP

HDR ENGINEERING INC.
2155 LOUISIANA BLVD., NE
SUITE 9400
ALBUQUERQUE, NM 87110
MAIN: (505) 830-6400 FAX: (505) 830-5454

SERF EXPANSION

ELECTRICAL FIRE ALARM RISER DIAGRAM

BLDG. 3093 TA-03

DRAWN	B.O.	
DESIGN	D.B.	
CHECKED	P.D.	
DATE	11-10-11	

SUBMITTED
APPROVED FOR RELEASE

Los Alamos NATIONAL LABORATORY PO Box 1663 Los Alamos, New Mexico 87545

SHEET E-6000 60 OF 72

CLASSIFICATION UNCLASSIFIED REVIEWER DATE

PROJECT ID 102310 DRAWING NO C-55752 REV 0

ECN-11-TA-03-1398-0000-0265

C:\pwworking\phx\d0224126\102310-E-6000-R0.dwg, Jan 16, 2012 @ 9:42am

ENV-RCRA-12-0059

ENCLOSURE 3

LAUR-12-10463

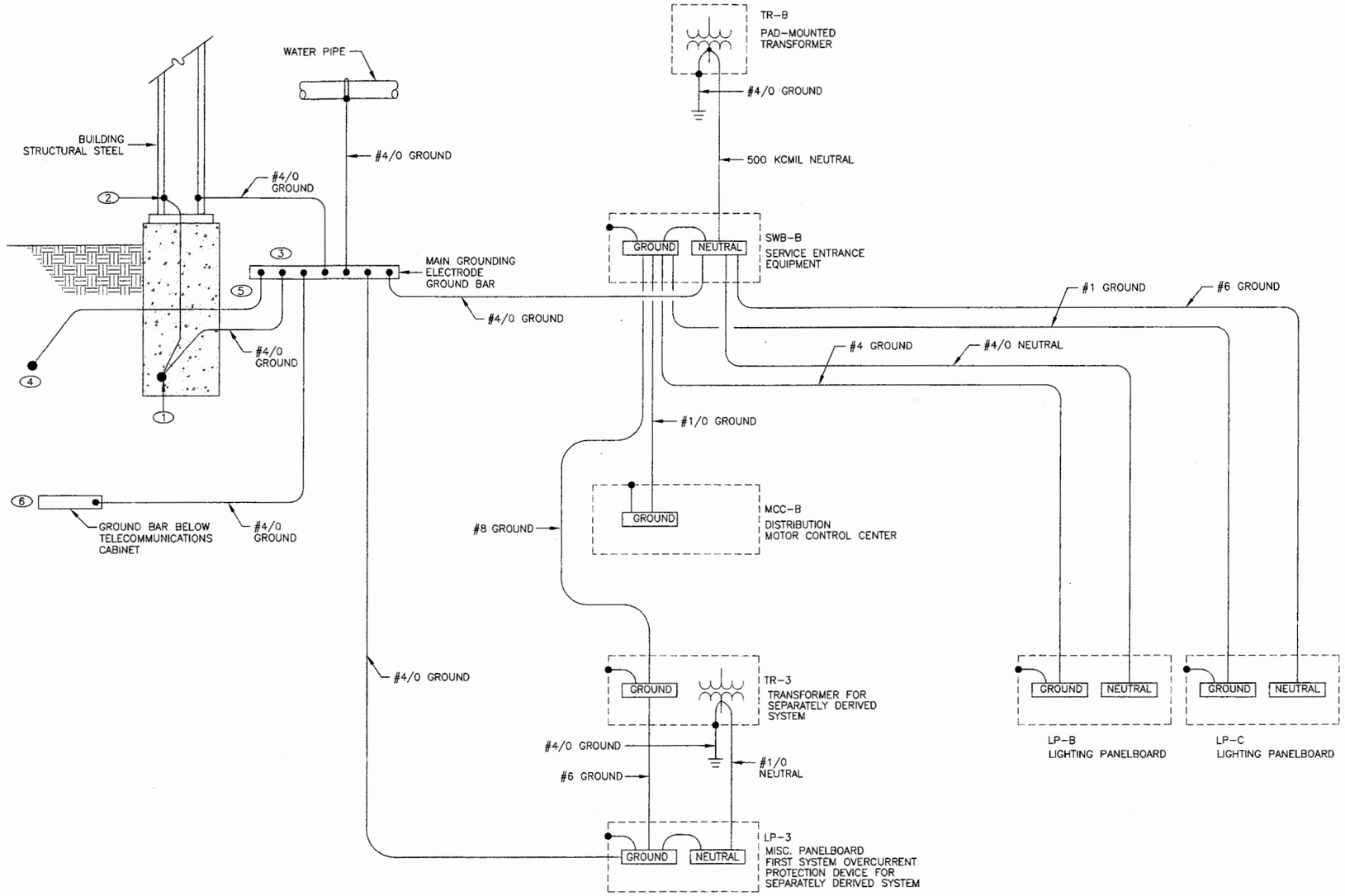

GROUNDING SYSTEM DIAGRAM

SCALE: NONE

GENERAL NOTES

1. CONDUCTOR SIZES SHOWN ARE MINIMUM AND MAY BE LARGER THAN THE MINIMUM SIZES REQUIRED BY NEC.
2. INSTALL GROUNDING CONNECTIONS TO BUILDING STRUCTURE AND WATER PIPES AT LOCATIONS THAT ARE VISIBLE AND ACCESSIBLE FOR INSPECTION, MAINTENANCE, AND TESTING.
3. INSTALL AN INSULATED THROAT GROUNDING BUSHING ON EACH METALLIC SERVICE ENTRANCE CONDUIT. BOND TO GROUND BUS USING CONDUCTOR THAT IS SIZED BASED ON NEC TABLE 250-66 USING THE SERVICE PHASE CONDUCTOR SIZE.
4. INSTALL AN INSULATED THROAT GROUNDING BUSHING ON EACH METALLIC FEEDER CONDUIT. BOND TO GROUND BUS USING CONDUCTOR THAT IS SIZED BASED ON NEC TABLE 250-122 USING THE FEEDER CIRCUIT OVERCURRENT DEVICE SIZE OR THE SEPARATELY DERIVED SYSTEM OVERCURRENT DEVICE SIZE.

KEYED NOTES

1. INSTALL A CONCRETE-ENCASED MAIN GROUNDING ELECTRODE IN THE BUILDING FOUNDATION AROUND THE ENTIRE PERIMETER OF THE BUILDING. LOCATE ELECTRODE IN THE BOTTOM ONE-THIRD OF THE FOUNDATION WITH AT LEAST 3 INCHES OF CONCRETE COVER. USE #4/0 BARE COPPER CABLE.
2. BOND EACH PERIMETER STRUCTURAL STEEL COLUMN TO THE CONCRETE-ENCASED MAIN GROUNDING ELECTRODE. USE COMPRESSION CONNECTORS THAT MEET IEEE 837 REQUIREMENTS OR USE EXOTHERMIC WELDS.
3. INSTALL A "MAIN GROUND ELECTRODE GROUND BAR" FOR SINGLE POINT GROUNDING. LOCATE AT AN ACCESSIBLE POINT NEAR SWB-B. MAKE CONNECTIONS TO THE GROUND ELECTRODE CONDUCTOR USING IRREVERSIBLE CONNECTORS OR EXOTHERMIC WELDS. MAKE OTHER CONNECTIONS TO THE GROUND BAR USING TWO-HOLE COMPRESSION SPADE LUGS THAT MEET IEEE 837 REQUIREMENTS. LABEL EACH CONNECTION TO THE GROUND BAR.
4. LIGHTNING PROTECTION GROUNDING COUNTERPOISE – #4/0 COPPER.
5. BOND THE LIGHTNING PROTECTION SYSTEM GROUNDING COUNTERPOISE TO THE MAIN GROUND ELECTRODE GROUND BAR. USE #4/0 COPPER CABLE WITH 600 VOLT INSULATION. USE A COMPRESSION CONNECTOR THAT MEETS IEEE 837 REQUIREMENTS OR USE AN EXOTHERMIC WELD AT THE UNDERGROUND CONNECTION.
6. INSTALL "MAIN GROUNDING ELECTRODE BAR GROUND BAR EXTENSIONS" AS SHOWN ON PLAN DRAWING. MAKE CONNECTIONS BETWEEN THE GROUNDING ELECTRODE BARS USING IRREVERSIBLE CONNECTORS OR EXOTHERMIC WELDS.

NO	DATE	CLASS REV	DESCRIPTION	DWN	VER	CHKD	SUB	APP

HDR ENGINEERING INC.
2155 LOUISIANA BLVD., NE
SUITE 9500
ALBUQUERQUE, NM 87110
MAIN: (505) 830-5400 FAX: (505) 830-9454

LANL BUILDING OFFICIAL APPROVED
105567
1-26-12
12-008
REVIEWED FOR LANL STANDARDS COMPLIANCE PER ISD 341 - 7 CH 18

DAVID F. BESINGER NEW MEXICO 12027 PROFESSIONAL ENGINEER
11-10-11

SERF EXPANSION

ELECTRICAL GROUNDING SYSTEM DIAGRAM

BLDG. 3093 TA-03

DRAWN	B.O.
DESIGN	D.B.
CHECKED	P.D.
DATE	11-10-11

SUBMITTED

APPROVED FOR RELEASE

Los Alamos NATIONAL LABORATORY PO Box 1663 Los Alamos, New Mexico 87545

SHEET E-6001

61 OF 72

CLASSIFICATION UNCLASSIFIED REVIEWER DATE 1/26/2012

PROJECT ID 102310

DRAWING NO C-55752

REV 0

ECN-11-TA-03-1398-0000-0265

C:\pwworking\phx\d0224128\102310-E-6001-R0.dwg, Jan 16, 2012 @ 9:42am

ENV-RCRA-12-0059

ENCLOSURE 3

LAUR-12-10463

GENERAL NOTES

1. ALL DEVICES AND EQUIPMENT SCREENED ON THIS SHEET ARE EXISTING. NEW WORK AND MODIFICATIONS SHOWN ON THIS SHEET ARE INDICATED IN BOLD.
2. (75) = CIRCUIT LENGTH IN FEET.
3. (39000) = AVAILABLE 3ø FAULT CURRENT (RMS, SYM. AMPS).
4. REFER TO GROUNDING SYSTEM DIAGRAM ON SHEET E-6001.

KEYED NOTES

1. EXISTING 13.2kV LINE LOCATED AT EXISTING POLE ON SITE.
2. EXISTING PUMP REPLACED WITH NEW PUMP FURNISHED BY EQUIPMENT SUPPLIER. UTILIZE EXISTING CIRCUIT AND CONNECT TO NEW MOTOR.
3. FURNISH AND INSTALL NEW MOTOR STARTER AND CIRCUIT PROTECTOR WITHIN EXISTING "MCC-A' SPACE. VERIFY NUMBER OF SPACES, BEFORE ROUGH-IN.
4. UTILIZE EXISTING SPARE STARTER WITHIN "MCC-A" FOR NEW EQUIPMENT. VERIFY STARTER NEMA SIZE AND CIRCUIT PROTECTOR RATING, PRIOR TO ROUGH-IN.

KEYED NOTES CONTINUED

5. EXISTING AIR COMPRESSOR AND CONTROL PANEL RELOCATED TO SERF EXPANSION BUILDING.
6. EXISTING AIR DRYER RELOCATED TO SERF EXPANSION BUILDING.
7. RELOCATE TRANSORMER TO SERF EXPANSION BUILDING TO FEED RELOCATED AIR DRYER. REFER TO SHEET E-1004 FOR LOCATION.

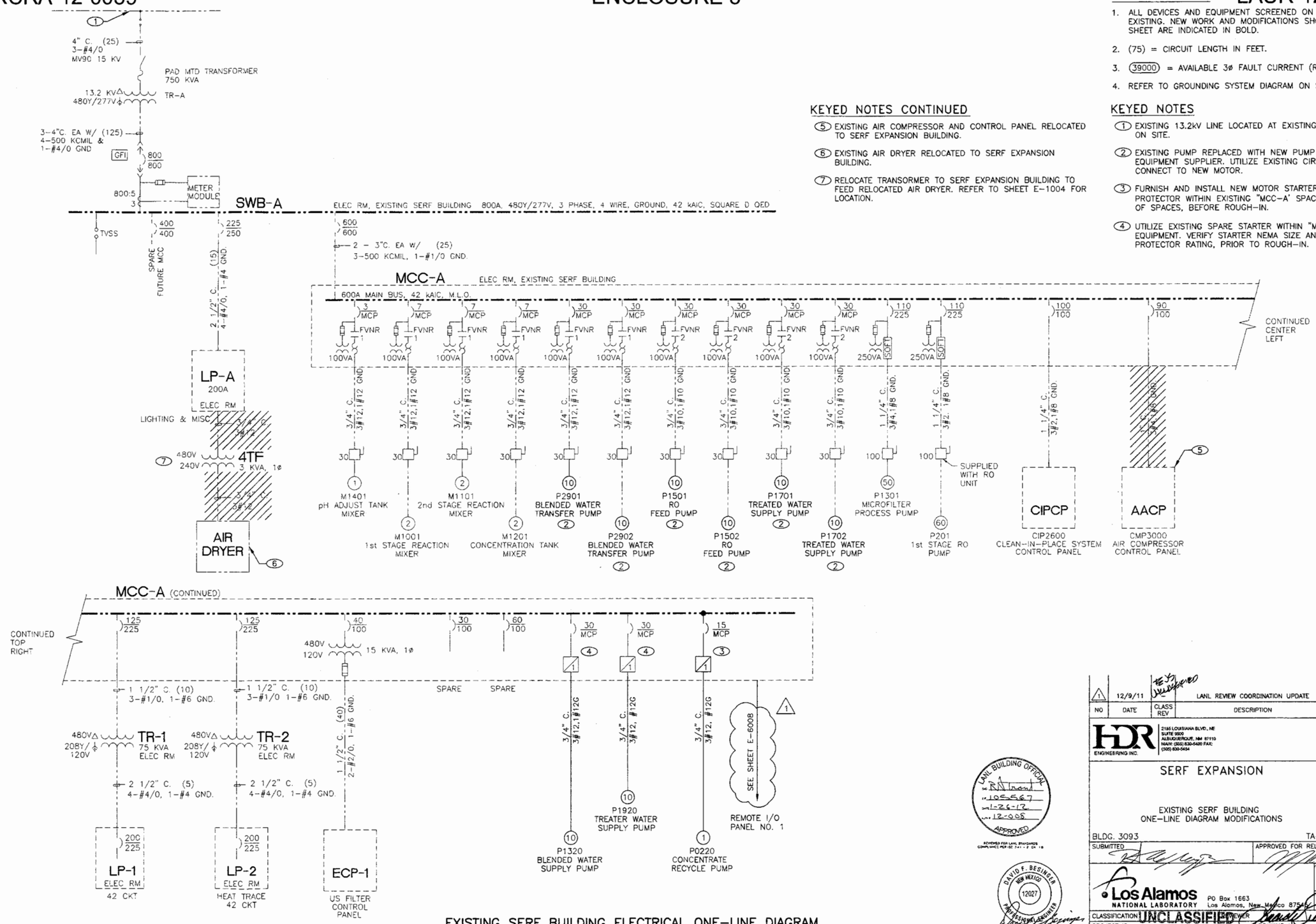

EXISTING SERF BUILDING ELECTRICAL ONE-LINE DIAGRAM

SCALE: NONE

NO	DATE	CLASS REV	DESCRIPTION	DWN	VER	CHKD	SUB	APP
1	12/9/11		LANL REVIEW COORDINATION UPDATE	BQ	–	–	–	–

HDR ENGINEERING INC.
2155 LOUISIANA BLVD., NE
SUITE 9500
ALBUQUERQUE, NM 87110
MAIN (505) 830-5400 FAX: (505) 830-5454

SERF EXPANSION

EXISTING SERF BUILDING
ONE-LINE DIAGRAM MODIFICATIONS

BLDG. 3093 TA-03

DRAWN	B.Q.
DESIGN	D.B.
CHECKED	P.B.
DATE	11-10-11

SUBMITTED

APPROVED FOR RELEASE

Los Alamos NATIONAL LABORATORY
PO Box 1663
Los Alamos, New Mexico 87545

SHEET E-6002

62 OF 72

CLASSIFICATION UNCLASSIFIED

REVIEWER

DATE 12/20/12

PROJECT ID 102310

DRAWING NO C-55752

REV 1

LANL BUILDING OFFICIAL APPROVED
105567
1-26-12
12-905

DAVID F. BESINGER
NEW MEXICO
12027
PROFESSIONAL ENGINEER
11-10-11

ECN-11-TA-03-1398-0000-0265

C:\pwworking\phx\d0224126\102310-E-6002-R1.dwg, Jan 16, 2012 @ 9:42am

ENV-RCRA-12-0059

ENCLOSURE 3

LAUR-12-10463

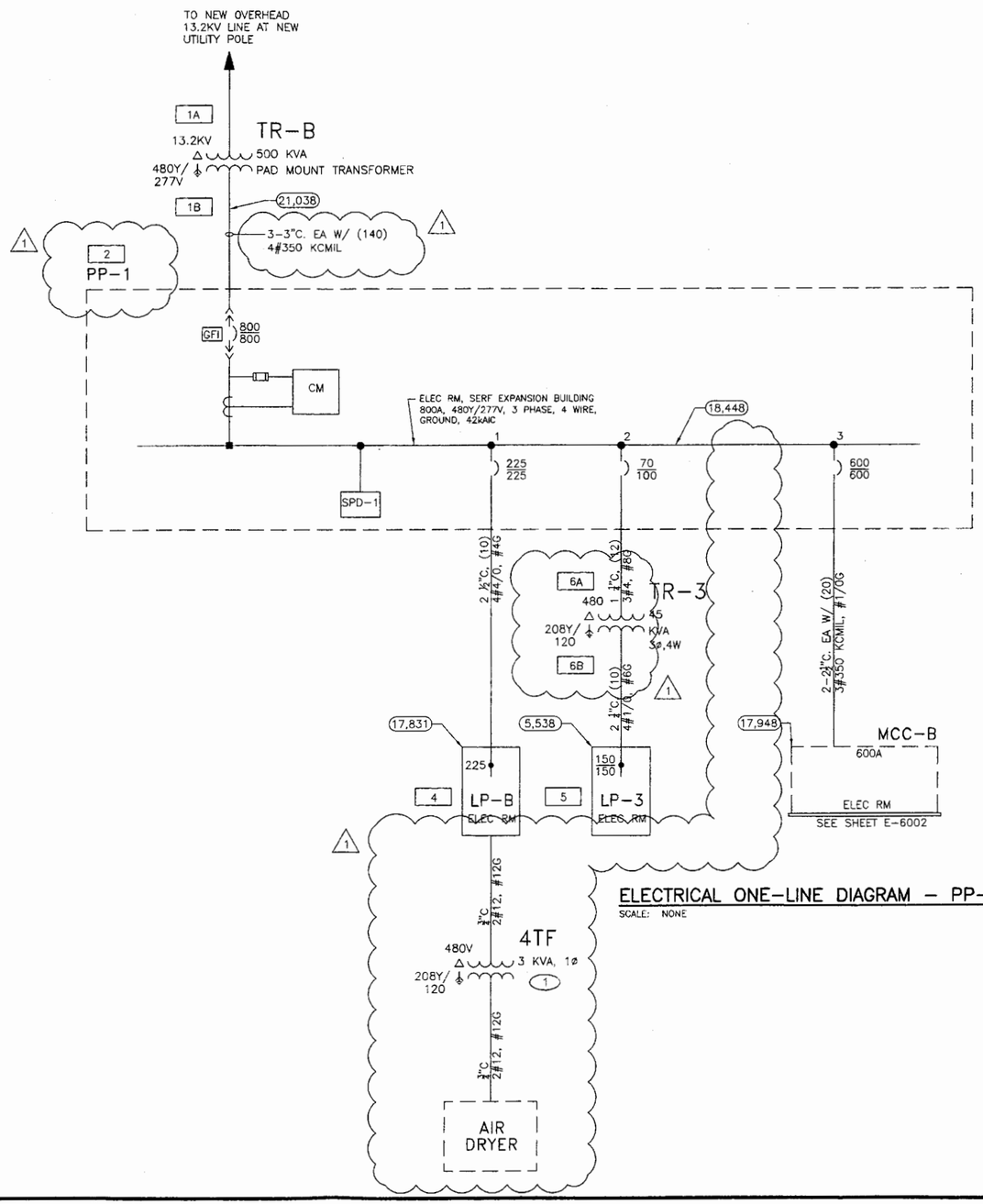

ELECTRICAL ONE-LINE DIAGRAM – PP-1

SCALE: NONE

ELECTRICAL LOAD SUMMARY

SERF EXPANSION BUILDING

LIGHTING: 6KVA X 1.25 (CONTINUOUS LOAD) =	7.5 KVA
RECEPTACLES: 2.5KVA (PER NFPA 70, TABLE 220.44) =	2.5 KVA
HVAC EQUIPMENT: 86KVA X 1.00 =	86 KVA
MISC. POWER: 19KVA X 1.00 =	19 KVA
PROCESS EQUIPMENT: 347KVA X 1.00 =	347 KVA
TOTAL LOAD =	462 KVA
FUTURE LOAD GROWTH (20% OF LIGHTING, GEN, HVAC) =	23 KVA
TOTAL DESIGN LOAD =	485 KVA
TRANSFORMER PEAK LOAD FACTOR (PER ANSI/IEEE C57.91) =	1.82 P.U.
MINIMUM TRANSFORMER NAMEPLATE AMPACITY =	266 KVA

EXISTING SERF BUILDING

LIGHTING: 4.5KVA X 1.25 (CONTINUOUS LOAD) =	6 KVA
GENERAL POWER: 5KVA (PER NFPA 70, TABLE 220.44) =	5 KVA
HVAC EQUIPMENT: 67KVA X 1.00 =	67 KVA
PROCESS EQUIPMENT EXISTING: 354KVA X 1.00 =	354 KVA
PROCESS EQUIPMENT NEW: 25KVA X 1.00 =	25 KVA
USF FUTURE EQUIPMENT: 217KVA X 1.00 =	217 KVA
TOTAL EXISTING LOAD =	673 KVA
FUTURE LOAD GROWTH (20% OF LIGHTING, GEN, HVAC) =	16 KVA
TOTAL DESIGN LOAD =	689 KVA
TRANSFORMER PEAK LOAD FACTOR (PER ANSI/IEEE C57.91) =	1.82 P.U.
MINIMUM TRANSFORMER NAMEPLATE AMPACITY =	379 KVA

GENERAL NOTES

1. (75) = CIRCUIT LENGTH IN FEET.
2. (39000) = AVAILABLE 3ø FAULT CURRENT (RMS, SYM. AMPS).
3. REFER TO GROUNDING SYSTEM DIAGRAM ON SHEET E-5003.

KEYED NOTES

(1) EXISTING AIR DRYER RELOCATED TO SERF EXPANSION BUILDING.

LANL BUILDING OFFICIAL APPROVED

DAVID F. BESINGER NEW MEXICO 12027 PROFESSIONAL ENGINEER 11-10-11

NO	DATE	CLASS REV	DESCRIPTION	DWN	VER	CHKD	SUB	APP

HDR ENGINEERING INC. 2155 LOUISIANA BLVD., NE SUITE 9900 ALBUQUERQUE, NM 87110 MAIN: (505) 830-6400 FAX: (505) 830-5454

SERF EXPANSION

ELECTRICAL ONE-LINE DIAGRAM – SWB-B

BLDG. 3093 TA-03

DRAWN	B.G.
DESIGN	D.B.
CHECKED	P.D.
DATE	11-10-11

SUBMITTED

APPROVED FOR RELEASE

Los Alamos NATIONAL LABORATORY PO Box 1663 Los Alamos, New Mexico 87545

SHEET E-6003 63 OF 72

CLASSIFICATION UNCLASSIFIED ENGINEER DATE 1/25/2012

PROJECT ID 102310 DRAWING NO C-55752 REV 0

ECN-11-TA-03-1398-0000-0265

C:\pwworking\phx\d0224126\102310-E-6003-R0.dwg, Jan 16, 2012 @ 4:22pm

KEYED NOTES

(1) EXISTING AIR COMPRESSOR AND CONTROL PANEL RELOCATED TO SERF EXPANSION BUILDING.

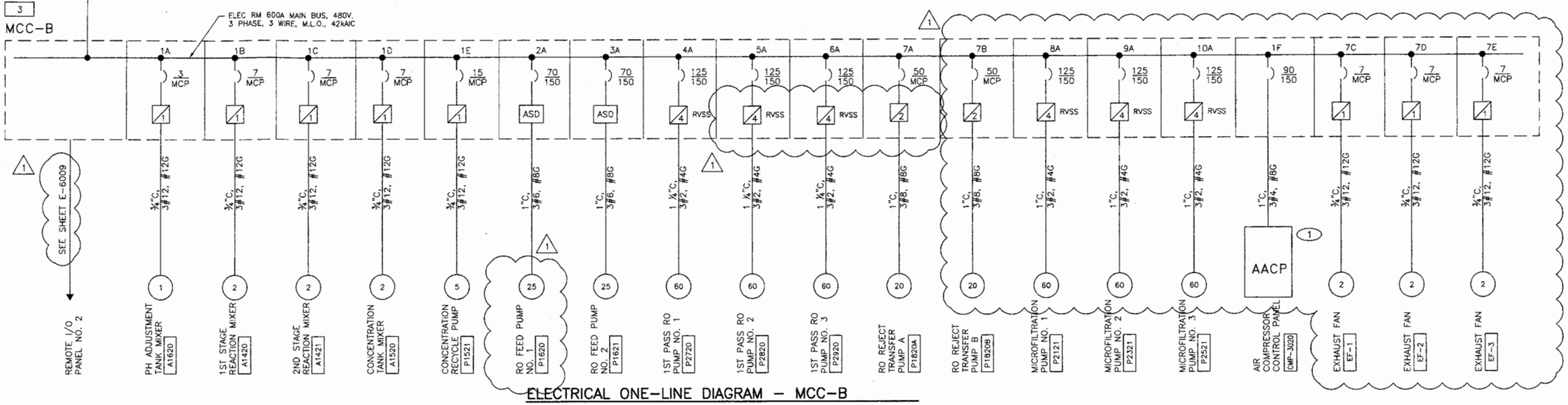

ELECTRICAL ONE-LINE DIAGRAM – MCC-B

SCALE: NONE

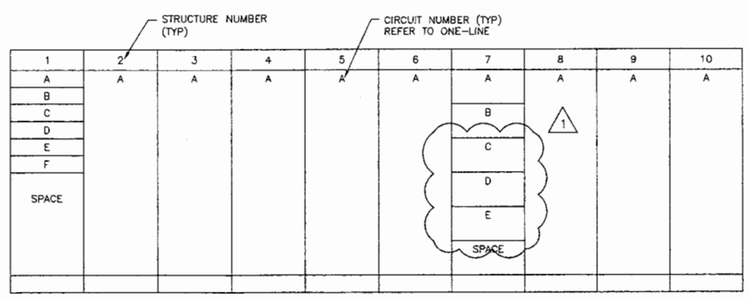

ELEVATION – MCC-B

SCALE: NONE

NO	DATE	CLASS REV	DESCRIPTION	DWN	VER	CHKD	SUB	APP
1	12/9/11	EX3	LANL REVIEW COORDINATION UPDATE	BQ	–	–	–	–

HDR ENGINEERING INC.
2155 LOUISIANA BLVD., NE
SUITE 9000
ALBUQUERQUE, NM 87110
MAIN: (505) 830-5400 FAX: (505) 830-5404

SERF EXPANSION

ELECTRICAL ONE-LINE DIAGRAM – MCC-B

BLDG. 3093 TA-03

DRAWN B.Q. DESIGN D.B. CHECKED P.D. DATE 11-10-11

SUBMITTED APPROVED FOR RELEASE

Los Alamos NATIONAL LABORATORY PO Box 1663 Los Alamos, New Mexico 87545

SHEET E-6004 64 OF 72

CLASSIFICATION UNCLASSIFIED REVIEWER DATE 1/26/2012

PROJECT ID 102310 DRAWING NO C-55752 REV 1

LANL BUILDING OFFICIAL APPROVED BY 105567 DATE 1-26-12 LANL 12-008

REVIEWED FOR LANL STANDARDS COMPLIANCE PER ISO 241-7 QC 18

DAVID F. BESINGER NEW MEXICO 12027 PROFESSIONAL ENGINEER 11-10-11

ECN-11-TA-03-1398-0000-0265

C:\pwworking\phx\d0224126\102310-E-6004-R1.dwg, Jan 16, 2012 @ 9:43am

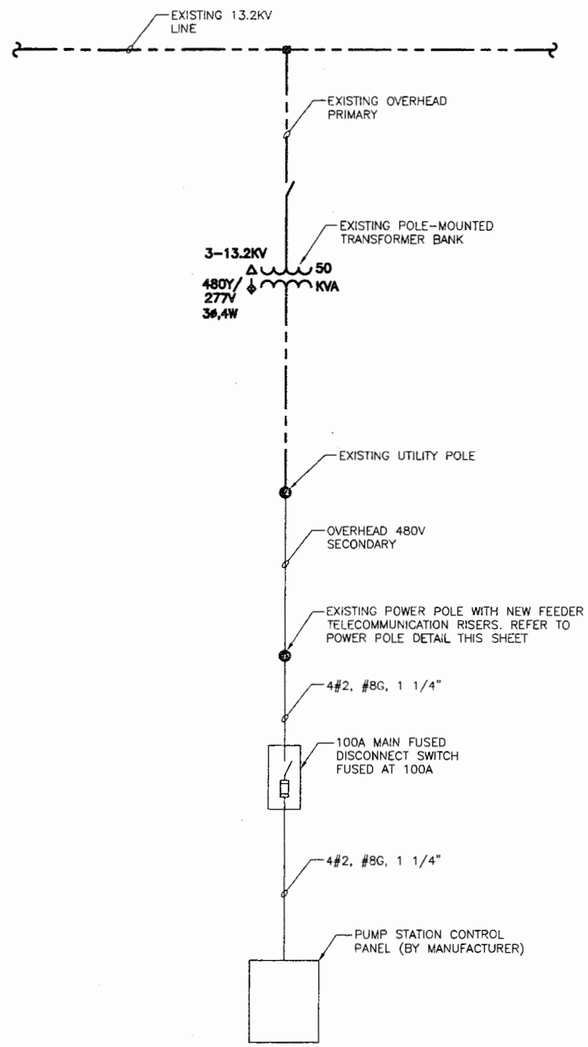

PUMP STATION ONE-LINE DIAGRAM

SCALE: NONE

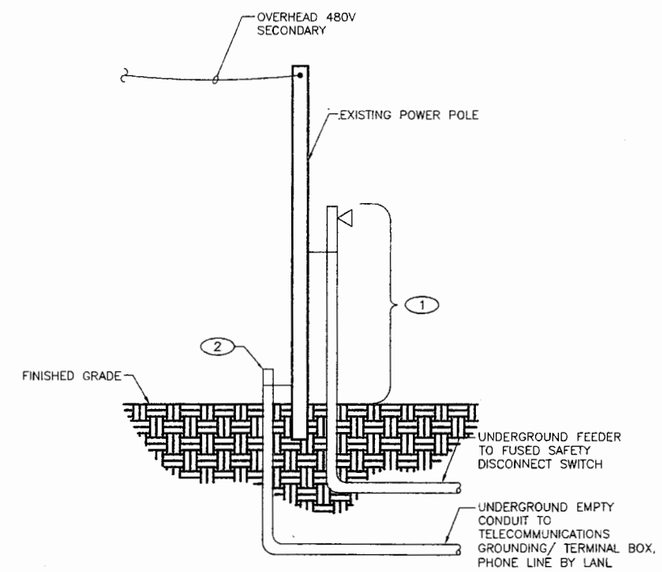

POWER POLE RISER DETAIL

SCALE: NONE

GENERAL NOTES:

1. REFER TO SPECIFICATIONS SECTION 33 3200.

KEYED NOTES:

1. 1 1/4" RIGID POLE RISER COMPLETE WITH STAND-OFF BRACKETS AND WEATHERHEAD.
2. STUB-UP AND EXTEND CONDUIT UPWARD ON POLE MINIMUM 3'-0" ABOVE GRADE.

LANL BUILDING OFFICIAL APPROVED

DAVID F. BESINGER NEW MEXICO 12027 PROFESSIONAL ENGINEER 11-10-11

NO	DATE	CLASS REV	DESCRIPTION	DWN	VER	CHKD	SUB	APP

HDR ENGINEERING INC.
2155 LOUISIANA BLVD., NE
SUITE 9000
ALBUQUERQUE, NM 87110
MAIN: (505) 830-5400 FAX:
(505) 830-5454

SERF EXPANSION

ELECTRICAL ONE-LINE DIAGRAM - BLOW DOWN PUMP STATION

BLDG. 3093 TA-03

DRAWN	B.Q.
DESIGN	D.B.
CHECKED	P.D.
DATE	11-10-11

SUBMITTED APPROVED FOR RELEASE

Los Alamos NATIONAL LABORATORY PO Box 1663 Los Alamos, New Mexico 87545

SHEET E-6005 65 OF 72

CLASSIFICATION UNCLASSIFIED REVIEWER DATE 1/25/2012

PROJECT ID 102310 DRAWING NO C-55752 REV 0

ECN-11-TA-03-1398-0000-0265

C:\pwworking\phx\d0224126\102310-E-6005-R0.dwg, Jan 16, 2012 @ 9:44am

PANEL LP-B

LOCATION: ELECTRICAL ROOM
MOUNTING: SURFACE
ENCLOSURE: NEMA 1
BRKR MTG: BOLT-ON

VOLTAGE: 480/277 V
PHASE: 3 P / 4W
BUSSING: 225 A
MCB: A
MLO: 225 A

KAIC: 35
CODES: 0=EQPT, 1=RCPT, 2=LTG, 3=A/C, 4=HEAT 5=CONTINUOUS MOTORS, 6=LRGST MOTOR, 7=PANEL
ACCESSORIES: GROUND BUS, 42 SPACE

BUSSING SHALL BE FULLY RATED

CODE	BRKR	CIRCUIT USE	CKT	LOAD	A	B	C	LOAD	CKT	CIRCUIT USE	BRKR	CODE
4	-	-	1	3,333	X			3,333	2	-	-	4
4	20/3	UNIT HEATER UH-1	3	3,333		X		3,333	4	UNIT HEATER UH-8	20/3	4
4	-	-	5	3,333			X	3,333	6	-	-	4
4	-	-	7	3,333	X			582	8	-	-	0
4	20/3	UNIT HEATER UH-2	9	3,333		X		582	10	ROLL-UP DOOR MOTOR	15/3	0
4	-	-	11	3,333			X	582	12	-	-	0
4	-	-	13	3,333	X			2,505	14	INTERIOR LIGHTING	20/1	2
4	20/3	UNIT HEATER UH-3	15	3,333		X		1,890	16	INTERIOR LIGHTING	20/1	2
4	-	-	17	3,333			X	1,323	18	EXTERIOR LIGHTING	20/1	2
4	-	-	19	3,333	X			2,000	20	-	-	4
4	20/3	UNIT HEATER UH-4	21	3,333		X		2,000	22	ELECTRIC WATER HEATER EWH-1	20/3	4
4	-	-	23	3,333			X	2,000	24	-	-	4
4	-	-	25	3,333	X			1,200	26	3KVA AIR DRYER XFMR	15/2	0
4	20/3	UNIT HEATER UH-5	27	3,333		X		1,200	28	-	-	0
4	-	-	29	3,333			X		30	SPARE	20/1	
4	-	-	31	3,333	X				32	SPARE	20/1	
4	20/3	UNIT HEATER UH-6	33	3,333		X			34	SPARE	20/1	
4	-	-	35	3,333			X		36	BUSSED SPACE		
4	-	-	37	3,333	X				38	BUSSED SPACE		
4	20/3	UNIT HEATER UH-7	39	3,333		X			40	BUSSED SPACE		
4	-	-	41	3,333			X		42	BUSSED SPACE		

	EQPT VA	RCPT VA	LTG VA	AC/HEAT VA	MOTORS	LRG MTR	CONN VA	DEMAND VA	PHASE AMP
PHASE A	1782	0	2505	28664	0	0	32951	33577	121
PHASE B	1782	0	1890	28664	0	0	32336	32809	118
PHASE C	582	0	1323	28664	0	0	30569	30900	112
TOTAL	4146	0	5718	85992	0	0	95856	97286	

PANEL DEMAND AMPS 117 AMPS
PANEL DEMAND VA 97286 VA

NOTES:

PANEL LP-3

LOCATION: ELEC ROOM
MOUNTING: SURFACE
ENCLOSURE: NEMA 1 STYLE: NQOD
BRKR MTG: BOLT-ON (REF: SQUARE D)
BREAKERS: 75 DEGREE TERMINALS

VOLTAGE: 208/120 V
PHASE: 3 P / 4W
BUSSING: 225 A
MCB: 225 A
MLO: A

KAIC: 14
CODES: 0=EQPT, 1=RCPT, 2=LTG, 3=A/C, 4=HEAT 5=CONTINUOUS MOTORS, 6=LRGST MOTOR, 7=PANEL
ACCESSORIES: GROUND BUS, 42 SPACE

BUSSING SHALL BE FULLY RATED

CODE	BRKR	CIRCUIT USE	CKT	LOAD	A	B	C	LOAD	CKT	CIRCUIT USE	BRKR	CODE
0	20/1	MICRO. F2120 CONTROL PANEL	1	1,200	X			900	2	RECEPTACLES - WEST WALL	20/1	1
0	20/1	MICRO. F2320 CONTROL PANEL	3	1,200		X		900	4	RECEPTACLES - EAST WALL	20/1	1
0	20/1	MICRO. F2520 CONTROL PANEL	5	1,200			X	360	6	RECEPTACLES - EXTERIOR	20/1	1
0	20/1	RO UNIT RO2720 CONTROL PANEL	7	1,200	X			300	8	INSTRUMENTATION - REACTION TANKS	20/1	0
0	20/1	RO UNIT RO2920 CONTROL PANEL	9	1,200		X		200	10	INSTRUMENTATION - MICROFILTER	20/1	0
0	20/1	RO UNIT RO2920 CONTROL PANEL	11	1,200			X	400	12	INSTRUMENTATION - RO UNITS	20/1	0
5	20/1	HYPOCHLORITE PUMP P2020	13	180	X			250	14	INSTRUMENTATION - RO REJECT	20/1	0
5	20/1	HYPOCHLORITE PUMP P2021	15	180		X			16	SPARE	20/1	0
5	20/1	HYPOCHLORITE PUMP P2022	17	180			X	2,912	18	OUTDOOR UNIT CU-1	40/2	3
5	20/1	HYDROCHLORIC ACID PUMP P2023	19	180	X			2,912	20	-	-	3
5	20/1	HYDROCHLORIC ACID PUMP P2024	21	180		X		600	22	LIGHTING CONTACTOR	20/1	0
5	20/1	HYDROCHLORIC ACID PUMP P2025	23	180			X		24	SPARE	20/1	0
0	20/1	FIRE ALARM CONTROL PANEL	25	1,200	X			780	26	INDOOR UNIT AC-1	15/2	3
0	20/1	HEAT TRACING SYSTEM (NOTE 1)	27	1,260		X		780	28	-	-	3
0	20/1	HEAT TRACING SYSTEM (NOTE 1)	29	720			X		30	SPARE	20/1	
0	20/1	REMOTE I/O PANEL NO. 2	31	600	X				32	SPARE	20/1	
0	20/1	STORAGE TANK LEVEL CONTROLS	33	500		X			34	SPARE	20/1	
1	20/1	TELECOM CABINET	35	360			X		36	SPARE	20/1	
0	20/1	SUMP PUMP	37	1,176	X				38	SPARE	20/1	
0	20/1	MOTORIZED DAMPERS	39	300		X			40	BUSSED SPACE		
0	20/1	SUMP PUMP	41	1,176			X		42	BUSSED SPACE		

	EQPT VA	RCPT VA	LTG VA	AC/HEAT VA	MOTORS	LRG MTR	CONN VA	PANEL VA	PHASE AMP
PHASE A	5926	900	0	3692	360	0	10878	10968	91
PHASE B	5260	900	0	780	360	0	7300	7390	62
PHASE C	4696	720	0	2912	360	0	8688	8778	73
TOTAL	15882	2520	0	7384	1080	0	26866	27136	

PANEL DEMAND KVA: 27.14
RESERVE KVA: 5.43
DESIGN KVA: 32.56

PANEL DEMAND AMPACITY: 75 AMPS
RESERVE AMPACITY: 11 AMPS
DESIGN AMPACITY: 87 AMPS

NOTES:
1. PROVIDE GFEPCI TYPE BREAKER.

NO	DATE	CLASS REV	DESCRIPTION	OWN	VER	CHKD	SUB	APP
1	12/9/11	-	LANL REVIEW COORDINATION UPDATE	BQ	-	-	-	-

HDR ENGINEERING INC.
2155 LOUISIANA BLVD., NE
SUITE 9500
ALBUQUERQUE, NM 87110
MAIN: (505) 830-5400 FAX:
(505) 830-5454

SERF EXPANSION

PANELBOARD SCHEDULES

BLDG. 3093 TA-03

DRAWN B.Q.
DESIGN D.B.
CHECKED P.D.
DATE 11-10-11

SUBMITTED
APPROVED FOR RELEASE

Los Alamos NATIONAL LABORATORY PO Box 1663 Los Alamos, New Mexico 87545

SHEET E-6006
66 OF 72

CLASSIFICATION UNCLASSIFIED
DATE 1/25/2012
PROJECT ID 102310
DRAWING NO C-55752
REV 1

LANL BUILDING OFFICIAL APPROVED
DATE 1-26-12
LANL STANDARDS COORDINATOR PER ISD 341-7 CH. 16

DAVID F. BESINGER NEW MEXICO 12027 PROFESSIONAL ENGINEER
11-10-11

ECN-11-TA-03-1398-0000-0265

C:\pwworking\pnk\d0224126\102310-E-6006-R1.dwg, Jan 16, 2012 @ 9:44am

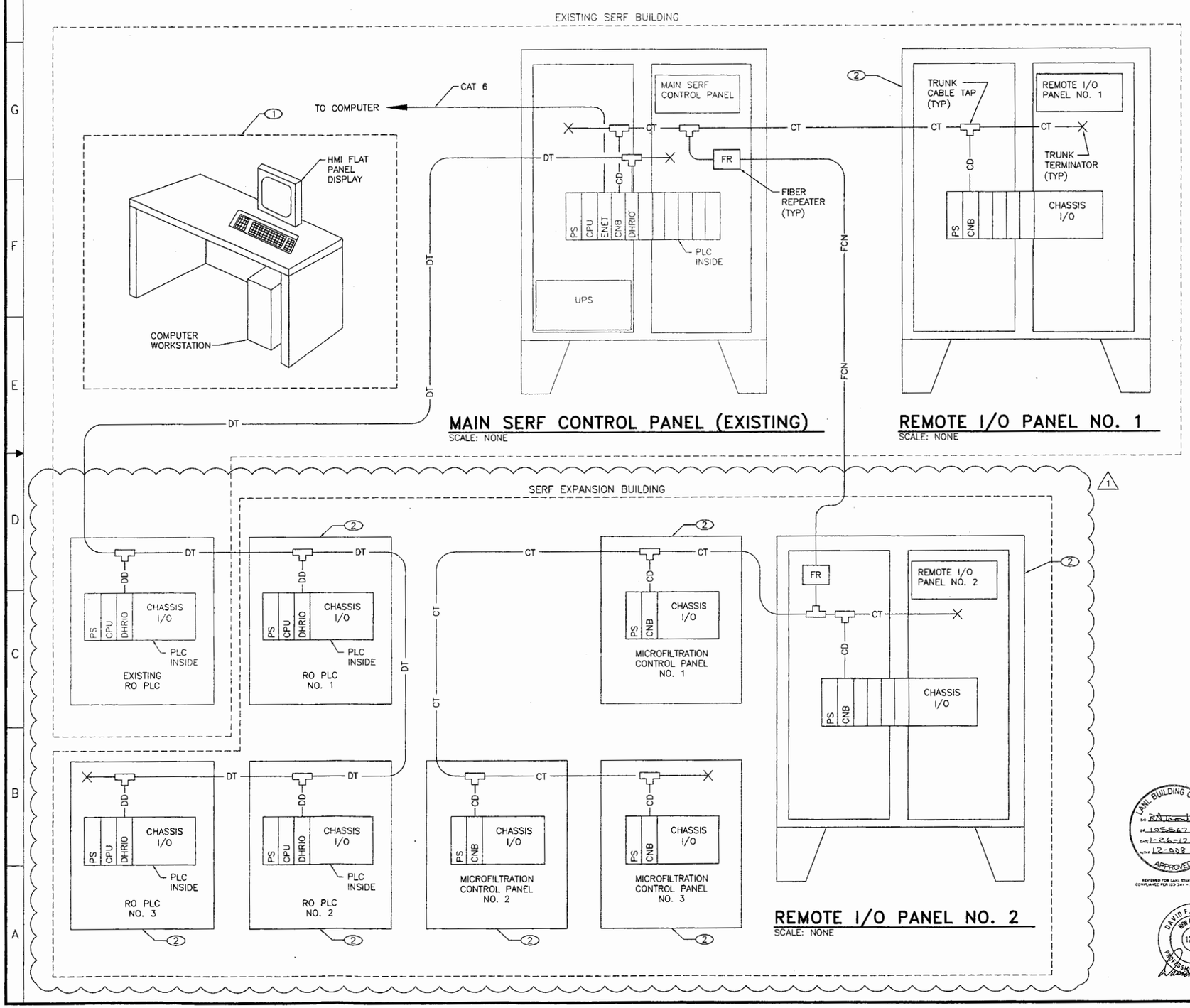

KEYED NOTES

1. EXISTING OPERATOR INTERFACE REPLACED WITH NEW HMI FURNISHED BY SIEMENS.
2. FURNISHED BY SIEMENS INSTALLED BY CONTRACTOR.

MODULE TYPES:

PS	POWER SUPPLY
CPU	PROCESSOR
ENET	ETHERNET
CNB	CONTROLNET INTERFACE
DHRIO	DH+ INTERFACE

CABLE TYPES:

—CT—	THICK SHIELDED COAXIAL CONTROLNET TRUNK
—CD—	THIN SHIELDED COAXIAL CONTROLNET DROP
—DT—	THICK SHIELDED TWIN AXIAL DATA HIGHWAY PLUS TRUNK
—DD—	THIN SHIELDED TWIN AXIAL DATA HIGHWAY PLUS DROP
—FCN—	FIBER OPTIC PAIR CONTROLNET

NOTES:

1. ETHERNET SHALL BE CAT 6 CABLE WITH RJ45 CONNECTIONS.
2. ALL FIBER OPTIC TRUNK AND FINAL TERMINATIONS SHALL BE ST TYPE CONNECTIONS.

NO	DATE	CLASS REV	DESCRIPTION	DWN	VER	CHKD	SUB	APP
1	12/9/11	E-3	LANL REVIEW COORDINATION UPDATE	BQ	-	-	-	-

HDR ENGINEERING INC.
2155 LOUISIANA BLVD., NE
SUITE 9000
ALBUQUERQUE, NM 87110
MAIN: (505) 830-5400 FAX: (505) 830-5454

SERF EXPANSION

SCADA CONFIGURATION

BLDG. 3093 TA-03

DRAWN	B.Q.
DESIGN	D.B.
CHECKED	P.D.
DATE	11-10-11

SUBMITTED APPROVED FOR RELEASE

LANL BUILDING OFFICIAL APPROVED
SO RATIONAL
IP 105567
DATE 1-26-12
ALNM 12-998
REVIEWED FOR LANL STANDARDS COMPLIANCE PER ID 341-2, CH. 16

DAVID F. BESINGER NEW MEXICO 12027 PROFESSIONAL ENGINEER 11-10-11

Los Alamos NATIONAL LABORATORY PO Box 1663 Los Alamos, New Mexico 87545

SHEET E-6007
67 OF 72

CLASSIFICATION UNCLASSIFIED DATE 1/25/2012

PROJECT ID 102310 DRAWING NO C-55752 REV 1

ECN-11-TA-03-1398-0000-0265

C:\pwworking\phx\d0224126\102310-E-6007-R1.dwg, Jan 16, 2012 @ 9:45am

ENV-RCRA-12-0059

ENCLOSURE 3

LAUR-12-10463

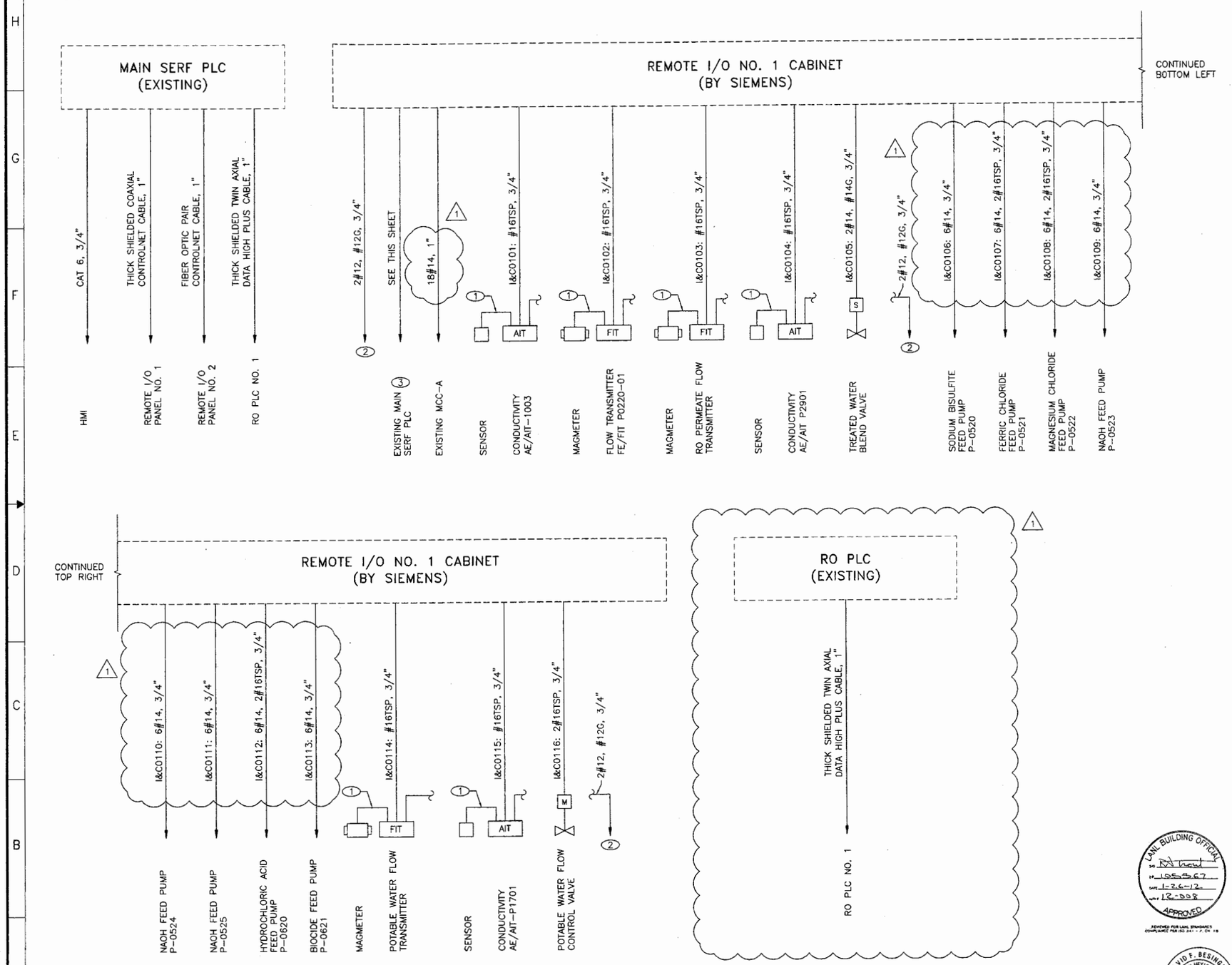

GENERAL NOTES

1. REFER TO SHEET E-6005 FOR SCADA SYSTEM ARCHITECTURE.

KEYED NOTES

1. EXISTING CABLING PROVIDED BY MANUFACTURER, CONDUIT AS REQUIRED.
2. CIRCUIT TO NEAREST EXISTING AVAILABLE 120V, 20A, 1-POLE SPARE BREAKER. VERIFY PANEL AMPACITY AND AMP NUMBER OF SPARE BREAKERS AND SPACES, PRIOR TO ROUGH-IN.
3. ROUTE CONDUIT AND CABLING VIA CONTROLS JUNCTION BOX LOCATED WITHIN NORTHWEST CORNER OF PROCESS ROOM WITHIN SERF EXPANSION BUILDING.

NO	DATE	CLASS REV	DESCRIPTION	DWN	VER	CHKD	SUB	APP
1	12/9/11	-	LANL REVIEW COORDINATION UPDATE	BQ	-	-	-	-

HDR ENGINEERING INC.
2155 LOUISIANA BLVD., NE
SUITE 9500
ALBUQUERQUE, NM 87110
MAIN: (505) 830-5400 FAX: (505) 830-5454

SERF EXPANSION

PLC ONE-LINE DIAGRAMS

BLDG. 3093 TA-03

DRAWN	B.Q.
DESIGN	D.B.
CHECKED	P.D.
DATE	11-10-11

SUBMITTED

APPROVED FOR RELEASE

Los Alamos NATIONAL LABORATORY PO Box 1663 Los Alamos, New Mexico 87545

SHEET E-6008

68 OF 72

CLASSIFICATION UNCLASSIFIED REVIEWER DATE 1/25/2012

PROJECT ID 102310

DRAWING NO C-55752

REV 1

LANL BUILDING OFFICIAL APPROVED

DAVID F. BESINGER NEW MEXICO 12027 PROFESSIONAL ENGINEER 11-10-11

ECN-11-TA-03-1398-0000-0265

C:\pwworking\pha\d0224126\102310-E-6008-R1.dwg, Jan 16, 2012 @ 4:23pm

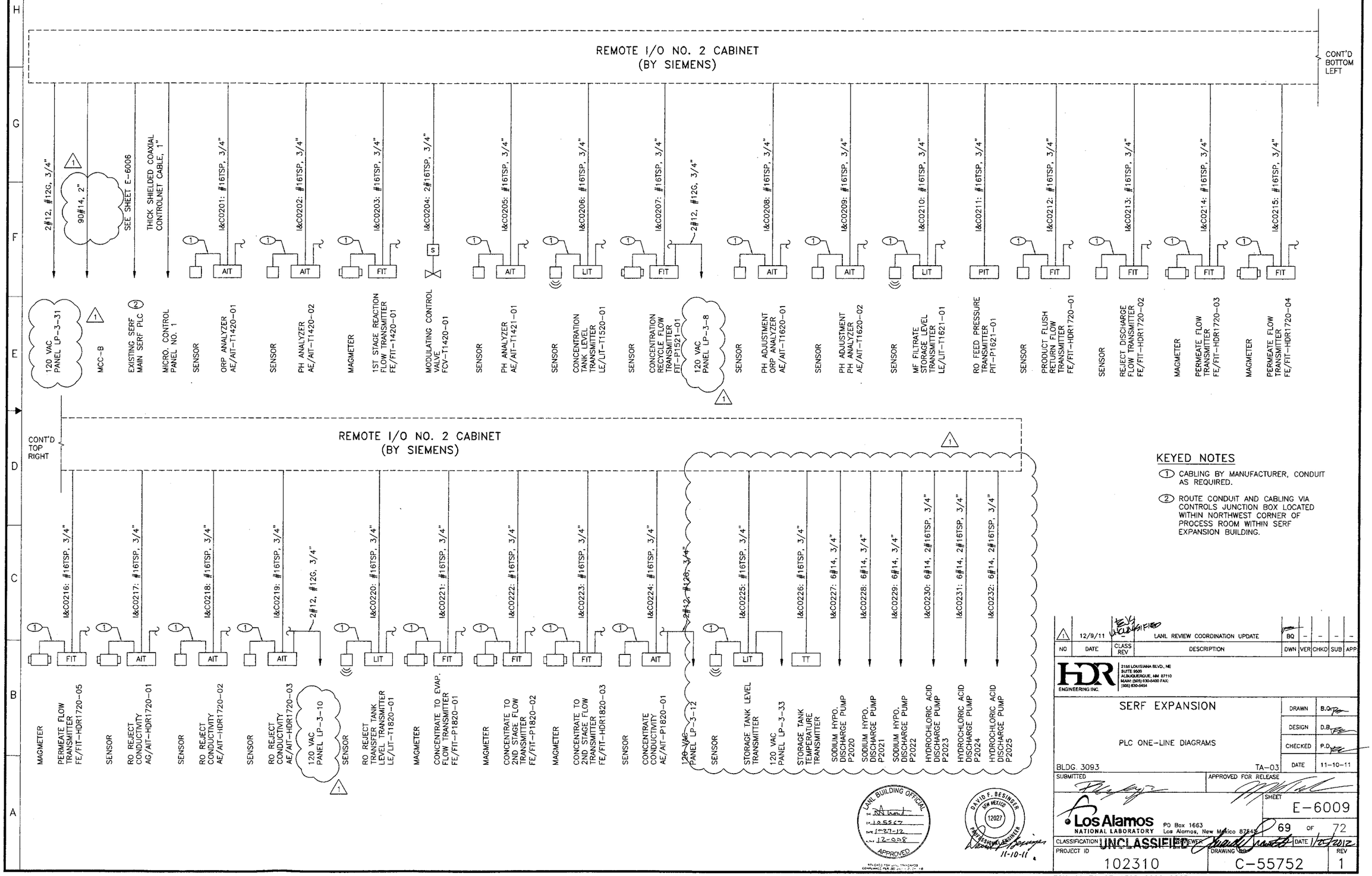

KEYED NOTES

1. CABLING BY MANUFACTURER, CONDUIT AS REQUIRED.
2. ROUTE CONDUIT AND CABLING VIA CONTROLS JUNCTION BOX LOCATED WITHIN NORTHWEST CORNER OF PROCESS ROOM WITHIN SERF EXPANSION BUILDING.

NO	DATE	CLASS REV	DESCRIPTION	DWN	VER	CHKD	SUB	APP
1	12/9/11		LANL REVIEW COORDINATION UPDATE	BQ	-	-	-	-

HDR ENGINEERING INC.
2155 LOUISIANA BLVD., NE
SUITE 9500
ALBUQUERQUE, NM 87110
MAIN: (505) 830-5400 FAX: (505) 830-5454

SERF EXPANSION

PLC ONE-LINE DIAGRAMS

BLDG. 3093 TA-03

DRAWN	B.Q.
DESIGN	D.B.
CHECKED	P.D.
DATE	11-10-11

SUBMITTED

APPROVED FOR RELEASE

Los Alamos NATIONAL LABORATORY PO Box 1663 Los Alamos, New Mexico 87545

SHEET E-6009

69 OF 72

CLASSIFICATION UNCLASSIFIED REVIEWER DATE 1/6/2012

PROJECT ID 102310 DRAWING NO. C-55752 REV 1

ECN-11-TA-03-1398-0000-0265

C:\pwworking\phx\d0224126\102310-E-6009-R1.dwg, Jan 16, 2012 @ 4:23pm

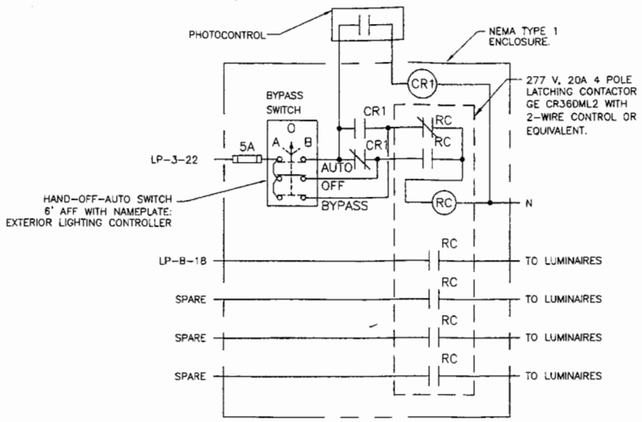

1 E-6010 EXTERIOR LIGHTING CONTROL DIAGRAM
SCALE: NONE

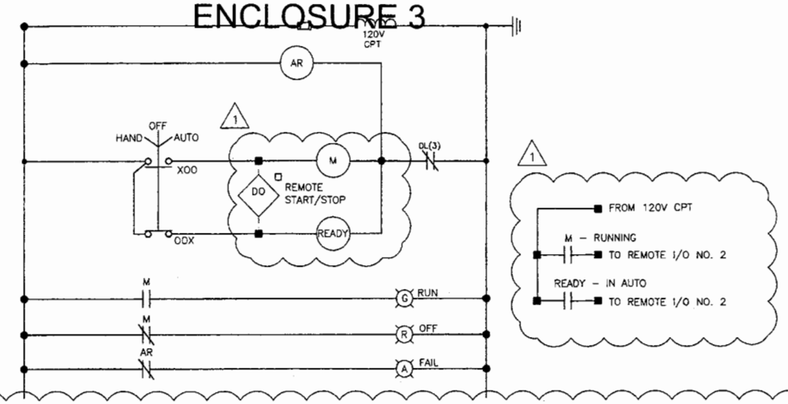

(SIMILAR TO MIXERS A1421, A1520, A1620; RO TRANSFER PUMP P1820B; MICROF. PUMP P2321, P2521; 1ST PASS RO PUMPS P2820, P2920)

3 E-6010 MIXER A1420, CONCENTRATE PUMP P1521, 1ST PASS RO PUMP P2720, RO TRANSFER PUMP P1820A, MICROF. PUMP P2121
SCALE: NONE

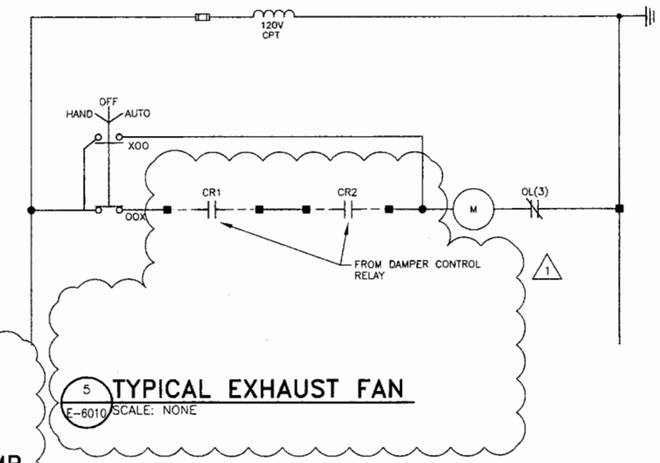

5 E-6010 TYPICAL EXHAUST FAN
SCALE: NONE

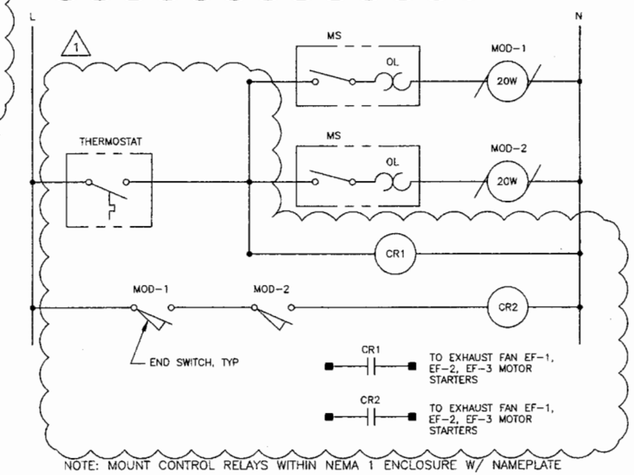

6 E-6010 MOD-1, MOD-2 CONTROL DIAGRAM
SCALE: NONE

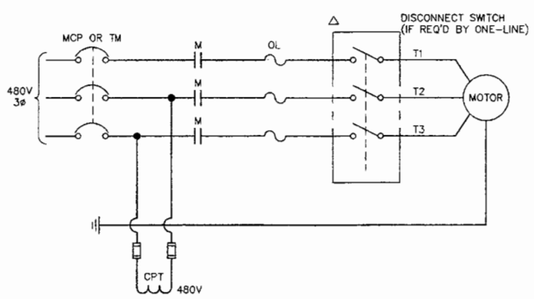

2 E-6010 TYPICAL 480V MOTOR STARTER & DISCONNECT SWITCH DIAGRAM
SCALE: NONE

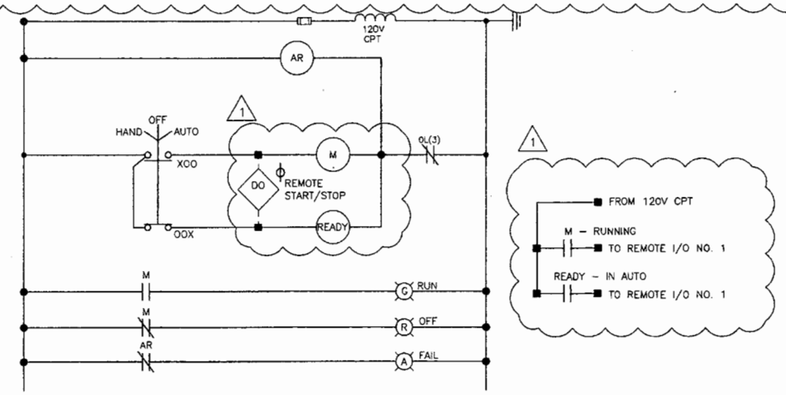

(SIMILAR TO BLENDED WATER PUMP P1321)

4 E-6010 CONCENTRATE PUMP P0220, BLENDED WATER PUMP P1320, TREATER WATER PUMP P1920
SCALE: NONE

DEVICE LEGEND
- □ LOCATED AT REMOTE I/O NO. 2
- ϕ LOCATED AT REMOTE I/O NO. 1
- △ LOCATED AT OR NEAR MOTOR

LANL BUILDING OFFICIAL APPROVED
REVIEWED FOR LANL STANDARDS COMPLIANCE PER AS 341-7 CH 18

DAVID F. BESINGER NEW MEXICO 12027 PROFESSIONAL ENGINEER
11-10-11

NO	DATE	CLASS REV	DESCRIPTION	DWN	VER	CHKD	SUB	APP
1	12/9/11		LANL REVIEW COORDINATION UPDATE	BQ	–	–	–	–

HDR ENGINEERING INC.
2155 LOUISIANA BLVD., NE SUITE 3000 ALBUQUERQUE, NM 87110 MAIN: (505) 830-5400 FAX: (505) 830-5454

SERF EXPANSION

CONTROL SCHEMATICS

BLDG. 3093 TA-03

DRAWN	B.Q.
DESIGN	D.B.
CHECKED	P.D.
DATE	11-10-11

SUBMITTED
APPROVED FOR RELEASE

Los Alamos NATIONAL LABORATORY PO Box 1663 Los Alamos, New Mexico 87545

SHEET E-6010
70 OF 72

CLASSIFICATION UNCLASSIFIED REVIEWER DATE 12/5/2012

PROJECT ID 102310 DRAWING NO. C-55752 REV 1

ECN-11-TA-03-1398-0000-0265

C:\pwworking\phx\d0229126\102310-E-6010-R1.dwg, Jan 16, 2012 @ 4:24pm

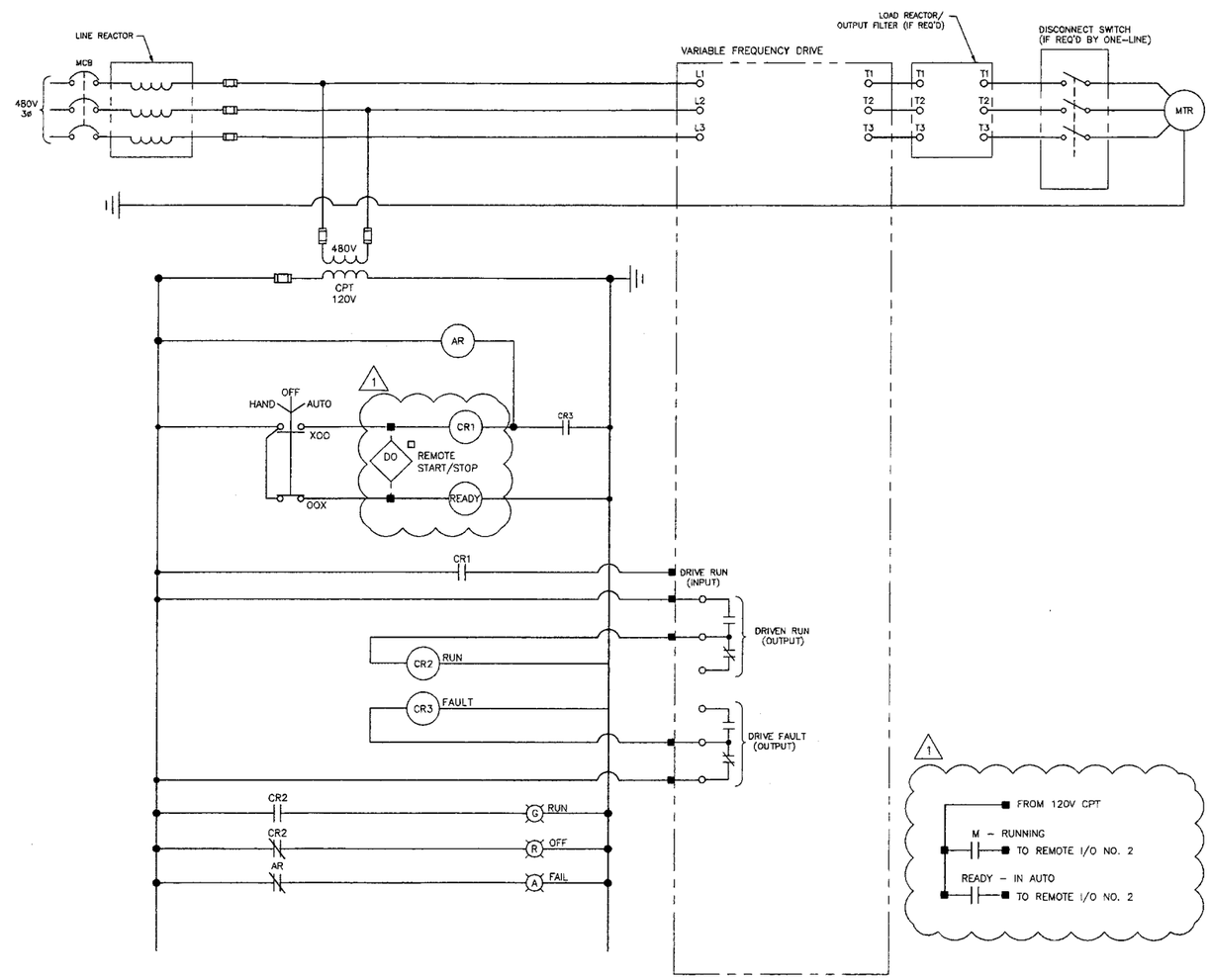

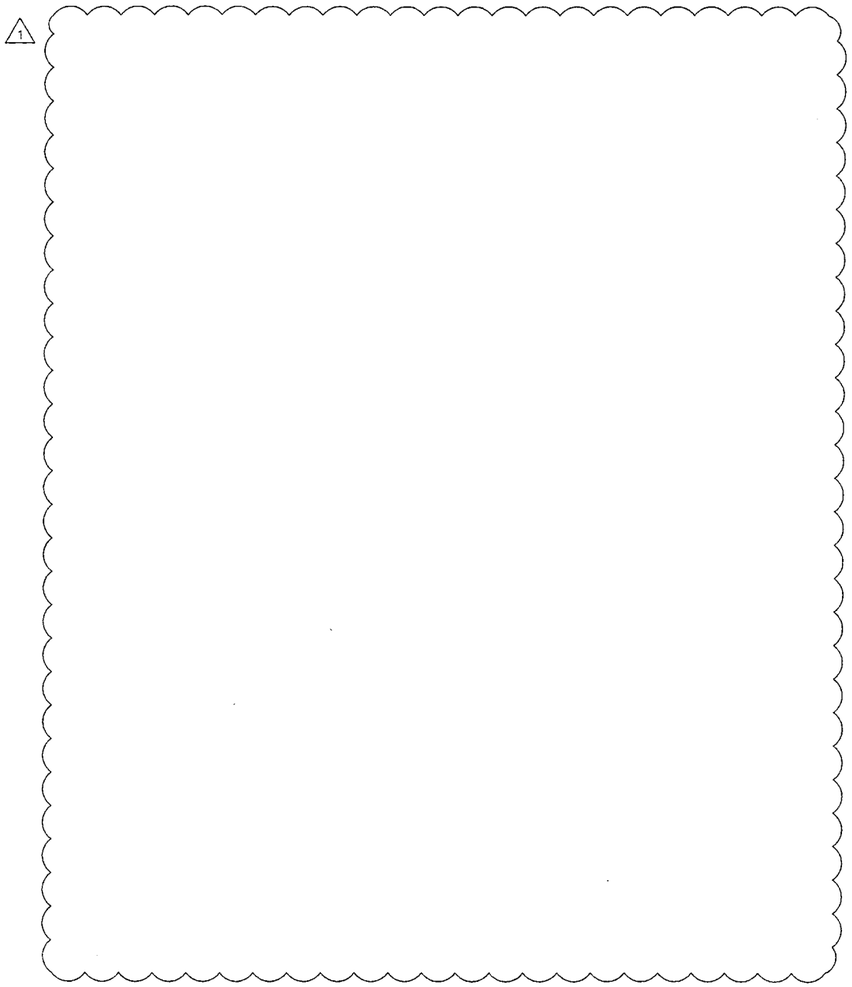

(SIMILAR TO RO FEED PUMP P1621)

1 E-6011 **RO FEED PUMP P1620**
SCALE: NONE

DEVICE LEGEND
□ LOCATED AT REMOTE I/O NO. 2
△ LOCATED AT OR NEAR MOTOR

LANL BUILDING OFFICIAL APPROVED
BY RA Trent
ID 105567
DATE 1-26-12
LANL# 12-008
REVIEWED FOR LANL STANDARDS COMPLIANCE PER ISD 13-1

DAVID F. BESINGER NEW MEXICO 12027 PROFESSIONAL ENGINEER
11-10-11

NO	DATE	CLASS REV	DESCRIPTION	DWN	VER	CHKD	SUB	APP
1	12/9/11		LANL REVIEW COORDINATION UPDATE	BQ	–	–	–	–

HDR ENGINEERING INC.
2155 LOUISIANA BLVD., NE
SUITE 9500
ALBUQUERQUE, NM 87110
MAIN: (505) 830-5400 FAX: (505) 830-5454

SERF EXPANSION

CONTROL SCHEMATICS

BLDG. 3093 TA-03

DRAWN	B.Q.
DESIGN	D.B.
CHECKED	P.D.
DATE	11-10-11

SUBMITTED
APPROVED FOR RELEASE

Los Alamos NATIONAL LABORATORY PO Box 1663 Los Alamos, New Mexico 87545

SHEET E-6011 71 OF 72

CLASSIFICATION UNCLASSIFIED REVIEWER DATE 1/25/2012

PROJECT ID 102310 DRAWING NO C-55752 REV 1

ECN-11-TA-03-1398-0000-0265

C:\pwworking\phx\d0224126\102310-E-6011-R1.dwg, Jan 16, 2012 @ 4:24pm

LUMINAIRE SCHEDULE

TYPE	DESCRIPTION	FINISH	MOUNTING	LENS	BALLAST	LAMP	MANUFACTURER & MODEL
A	ENCLOSED LOW BAY INDUSTRIAL FIXTURE WITH HIGH POWER FACTOR SCWA	WHITE POLYESTER POWDER FINISH	SURFACE, STRUCTURE (OR PENDANT AS PER DRAWING)	INJECTION MOLDED VIRGIN ACRYLIC	277V HIGH POWER FACTOR, CWA	150W HPS	LITHONIA TXL-150S-A20-TB-SCWA
B	EXTERIOR STANCHION MOUNTED ENCLOSED AND GASKETED FIXTURE. CONDUIT STANCHION/FIXTURE COMBINATION SHALL BE CAPABLE OF WITHSTANDING 90MPH WINDS (GUSTS UP TO 117MPH). CONSTANT WATTAGE HIGH PERFORMANCE BALLAST.	WET LOCATION, CORROSION-FREE EXPOXY FINISH	1 1/2" DIA. (MINIMUM) CONDUIT STANCHION	CLEAR SYMMETRIC REFRACTOR WITH OPTIC GUARD	277V HIGH POWER FACTOR, CWA	100W HPS	HOLOPHANE P3M-100-C-DB-MD-545-ST-GD
EX	EXIT LIGHT, DIE-CAST ALUMINUM WITH NICKEL CADMIUM BATTERY (90 MINUTE CAPACITY), SELF-DIAGNOSTICS AND TEST SWITCH	BRUSHED ALUMINUM	SURFACE, WALL	GREEN LETTERS	N/A	LED LAMPS INCLUDED	LITHONIA LE-S-G-12D/277-ELN-SD
EM 1	EMERGENCY EGRESS UNIT WITH LEAD CALCIUM BATTERY (90 MINUTE CAPACITY), SELF-DIAGNOSTICS AND TEST SWITCH	THERMOPLASTIC HOUSING WITH WHITE EPOXY POWDER COAT FINISH.	SURFACE, WALL	LAMP LENS	N/A, 277V 1	2-PAR36 1	HOLOPHANE C42-C-50-W-WL-2-NK-TD
G	DECORATIVE 150 HPS WALL MOUNTED HID FIXTURE WITH DIE-CAST ALUMINUM HOUSING	DARK BRONZE POLYESTER POWDER COAT	SURFACE, WALL AS INDICATED ON PLAN	FLAT CLEAR TEMPERED GLASS	277V, HPF, CWA	150W HPS	LITHONIA WST-1505-MD-TB-SCWA-LPI

NAMEPLATE SCHEDULE

SYMBOL	DESCRIPTION	SYMBOL	DESCRIPTION
1A	TRANSFORMER TR-B PRIMARY SERVED BY: NEW UTILITY POLE POWER LOCATION: WEST OF BLDG. 03-1398 VOLTAGE: 13.2KV, 3ø, 3W	5	PANEL LP-3 SERVED BY: PP-1 VIA TR-3 LOCATION: ELECTRICAL ROOM VOLTAGE: 208/120V, 3ø, 4W 1
1B	TRANSFORMER TR-B SECONDARY FEEDER: TR-B PRIMARY SERVES: PP-1 LOCATION: WEST OF BLDG. 03-1398 VOLTAGE: 480/277V, 3ø, 4W 1	6A	TRANSFORMER TR-3 PRIMARY SERVED BY: PP-1 LOCATION: PROCESS ROOM VOLTAGE: 480V 3ø, 3W
2	PANEL PP-1 SERVED BY: TR-B SECONDARY LOCATION: ELECTRICAL ROOM VOLTAGE: 480/277V, 3ø, 4W	6B	TRANSFORMER TR-3 SECONDARY FEEDER: TR-3 PRIMARY SERVES: PANEL LP-3 LOCATION: PROCESS ROOM VOLTAGE: 208/120V, 3ø, 4W
3	MCC-B SERVED BY: PP-1, CIRCUIT 3 LOCATION: ELECTRICAL ROOM VOLTAGE: 480/277V, 3ø, 3W		
4	PANEL LP-B SERVED BY: PP-1 CIRCUIT 1 LOCATION: ELECTRICAL ROOM VOLTAGE: 480/277V, 3ø, 4W		

LANL BUILDING OFFICIAL APPROVED
BY RA Howard
EP 105567
DATE 1-26-12
ACN# 12-008
REVIEWED FOR LANL CODE COMPLIANCE ONLY

DAVID F. BESINGER NEW MEXICO 12027 PROFESSIONAL ENGINEER
David F. Besinger 11-10-11

NO	DATE	CLASS REV	DESCRIPTION	DWN	VER	CHKD	SUB	APP
1	12/9/11	N/A	LANL REVIEW COORDINATION UPDATE	BQ	-	-	-	-

HDR ENGINEERING INC.
2155 LOUISIANA BLVD., NE
SUITE 9500
ALBUQUERQUE, NM 87110
MAIN: (505) 830-5400 FAX: (505) 830-5404

SERF EXPANSION

LIGHTING FIXTURE SCHEDULE

BLDG. 3093 TA-03

DRAWN	HDR
DESIGN	DESIGN(s)
CHECKED	CHECKER
DATE	11-10-11

SUBMITTED APPROVED FOR RELEASE

Los Alamos NATIONAL LABORATORY PO Box 1663 Los Alamos, New Mexico 87545

SHEET E-7000
72 OF 72

CLASSIFICATION UNCLASSIFIED REVIEWER DATE 1/25/2012

PROJECT ID 102310 DRAWING NO C-55752 REV 1

ECN-11-TA-03-1398-0000-0265

C:\pwworking\phx\d0224126\102310-E-7000-R1.dwg, Jan 16, 2012 @ 4:24pm