LA-9427, Vol. II

UC-70
Issued: October 1982

TH 50

The Los Alamos Controlled Air Incinerator for Radioactive Waste

Volume II: Engineering Design Reference Manual

R. A. Koenig
W. E. Draper
J. M. Newmyer
C. L. Warner

Los Alamos Los Alamos
Los Alamos

8328

CONTENTS

ABSTRACT 1

1.0 Summary 1
2.0 Feed Preparation 1
2.1 Receiving Slotbox 2
2.2 Assay 2
2.3 X Ray 3
2.4 Sorting Glovebox 3
2.5 Storage Glovebox 4

REFERENCES 4

3.0 Incinerator 5
3.1 Side Ram 5
3.2 Main Ram 6
3.3 Upper and Lower Combustion Chambers 6

4.0 Offgas Cleanup 9
4.1 Quench Tower 9
4.2 High-Energy Venturi Scrubber 11
4.3 Absorber Tower 12
4.4 Condenser/Demister and Reheater 12
4.5 HEPA Filters 13
4.6 Induced-Draft Blowers 14

5.0 Scrub-Solution Recycling 14
5.1 Process Liquid Filters 14
5.2 Process Liquid Heat Exchanger 15
5.3 Process Sump Tank 16
5.4 Quench Liquid Filters 17
5.5 Primary Heat Exchanger 18
5.6 Pumps 18
5.7 Piping 21

6.0 Ash Removal, Packaging, and Transport 21
6.1 GADOS 21
6.2 Vacuum Ash-Removal System 22
6.3 Ash-Transport System 23
6.4 Ash-Packaging System 24

7.0 Instruments and Controls 24
7.1 Feed Preparation 25
7.2 Incinerator 25
7.3 Offgas Cleanup 27
7.4 Scrub-Solution Recycling 28
7.5 Ash Removal and Packaging 28

APPENDIX 48

THE LOS ALAMOS CONTROLLED AIR INCINERATOR FOR RADIOACTIVE WASTE

Volume II: Engineering Design Reference Manual

by

R. A. Koenig, W. E. Draper,
J. M. Newmyer, and C. L. Warner

ABSTRACT

This two-volume report is a detailed design and operating documentation of the Los Alamos National Laboratory Controlled Air Incinerator (CAI) and is an aid to technology transfer to other Department of Energy contractor sites and the commercial sector. Volume I describes the CAI process, equipment, and performance, and it recommends modifications based on Los Alamos experience. It provides the necessary information for conceptual design and feasibility studies. Volume II provides descriptive engineering information such as drawings, specifications, calculations, and costs. It aids duplication of the process at other facilities.

1.0 SUMMARY

This volume provides detailed Controlled Air Incineration (CAI) design and engineering information accumulated during several years of development at Los Alamos National Laboratory. This manual's purpose is to make that information available to other installations. The text is divided into sections by major systems: feed preparation, incinerator, offgas cleanup, scrub-solution recycling, ash removal and packaging, and instruments and controls.

Under each system, drawing titles and numbers, specifications, sizing calculations,* and equipment costs are listed. Actual drawings for major parts of the design are reproduced in the Appendix. English units are used throughout.

2.0 FEED PREPARATION

The feed preparation line comprises a receiving slotbox, TRU assay station, x-ray package inspection station, sorting glovebox, and storage glovebox. The function of the feed

---

*A copy of the actual process calculations is available on request from the Los Alamos National Laboratory Waste Management Group H-7, MS E517, P.O. Box 1663, Los Alamos, NM 87545, 505-667-7391.

preparation line is to assay the waste packages for TRU content and to identify and remove items such as liquids and large glass and metallic objects that are not compatible with controlled air incineration.

2.1. Receiving Slotbox

Boxed waste is introduced to the system through a receiving slotbox which also houses the detector for the Multiple Energy Gamma Assay System (MEGAS). Each waste package is elevated through the bottom of the slotbox by a lift table. If the package is housed in a separate shipping container, the package is hoisted into the slotbox by an overhead package hoist and waste tong.

2.1.1. Drawings.

103Y-223005 D1 through D10	Standard Glovebox Details
103Y-223038 D1 through D4	Treatment Development Facility, Transition Assembly, Front End Vent
103Y-223046 D1 through D18	Treatment Development Facility, Entrance Slotbox
103Y-223053 D1	TDF Waste Box Tong II
103Y-223098 D1 through D3	Glovebox Modification, Ramp

2.1.2. Specifications. General specifications for the construction of the slotbox are detailed in Ref. 2-1. These specifications are common to all stainless steel gloveboxes installed in the process.

Manufacturer's specifications for the lift table are these.

Manufacturer	Air Technical Industries, Mentor, Ohio
Model	SLL-500-E
Performance	500-lb capacity, 24 in. × 36 in. table, 8-in. lowered height, 26-in. maximum vertical height

Manufacturer's specifications for the package hoist are these.

Manufacturer	Coast Tool Co., Arvada, Colorado
Model	500-10
Performance	500-lb capacity, 10-ft lift range

2.1.3. Sizing Calculations. The slotbox doors must be sized to pass a 1 ft × 1 ft × 2 ft package on its side and the MEGAS section must be tall enough to elevate the same-sized package on end in front of a gamma detector.

2.1.4. Equipment Costs. The slotbox was fabricated by American Stainless Steel Corp., Englewood, Colorado, at a cost of $12,984 in 1975. The lift table cost $948 in 1974, and the package hoist cost $360 in 1975.

2.2. Assay

Waste packages are weighed and assayed for TRU content by the MEGAS. The MEGAS detector head is located in the receiving slotbox.

2.2.1. Drawings.

103Y-223017 D1 through D4	Mod III, Rotating Translating Table for MEGAS, Treatment Development Facility

Other pertinent drawings are contained in Ref. 2-2.

2.2.2. Specifications. Specifications for the Los Alamos-designed MEGAS are contained in Ref. 2-2.

2.2.3. Sizing Calculations. Detailed calculations for the MEGAS are contained in Ref. 2-2.

2.2.4. Equipment Costs. Total materials cost for the MEGAS components was $22,727 in 1977. The MEGAS was assembled in-house at Los Alamos. The costs associated with that effort are not included.

2.3. X Ray

The x-ray system permits noncontact inspection of each waste package for materials that are not compatible with a CAI process. The housing that surrounds the x-ray conveyor serves as containment and as an airlock for packages entering the sorting glovebox which is maintained at a negative 0.7-in. W.G. pressure.

2.3.1. Drawings.

103Y-223054 D1 through D3	Treatment Development Facility, Airlock Assembly 100

Other pertinent drawings are contained in Refs. 2-3 and 2-4.

2.3.2. Specifications. Specifications for the conveyor housing are contained in Ref. 2-1. Specifications for the x-ray system are contained in Refs. 2-3 and 2-4.

2.3.3. Sizing Calculations. Not applicable.

2.3.4. Equipment Costs. The x-ray system was manufactured by American Science and Engineering Co., Cambridge, Massachusetts, at a 1975 cost of $49,025, including conveyor.

The conveyor housing was manufactured by American Stainless Steel Corp., Englewood, Colorado, at a cost of $900 in 1975.

2.4. Sorting Glovebox

The sorting glovebox provides an area for safely opening packages to remove materials incompatible with incineration as identified by the x-ray system. Further processing of the removed materials is possible with a bucket crusher and low-speed shredder.

2.4.1. Drawings.

103Y-223000 D1 and D2	Repackaging Well
103Y-223003 D1 through D10	Glovebox Door Modification
103Y-223013 D1 through D32	Treatment Development Facility, Sorting/Shredder/Compactor Glovebox

103Y-223029 D1 through D3	Treatment Development Facility, Shredder Assembly
103Y-223050 D1 through D3	Treatment Development Facility, HEPA Filter Housing, Standard for Push-Through Type

2.4.2. Specifications. The glovebox specifications are contained in Ref. 2-1.

The manufacturer's specifications for the bucket crusher are these.

Manufacturer	S & G Enterprises, Inc., Milwaukee, Wisconsin
Model	5A "Ram Flat"
Performance	12,500-lb ram force, 15 s per cycle

The manufacturer's specifications for the low-speed shredder are these.

Manufacturer	TEB, Ltd., Addision, Illinois
Model	AZ7 "Shred Pax"
Performance	6.4 ft^3 per minute capacity, 0.125-in. maximum metal dimension, 0.375-in. maximum plastic dimension, 0.5-in. maximum glass dimension, 4.0-in. maximum wood dimension, automatic reverse and advance upon stall

2.4.3. Sizing Calculations. Not applicable.

2.4.4. Equipment Costs. The sorting glovebox was fabricated by American Stainless Steel Corp., Englewood, Colorado, at a cost of $25,860 in 1975. The bucket crusher cost $1296 in 1975, and the low-speed shredder cost $4779 in 1975.

2.5. Storage Glovebox

The storage glovebox serves as a surge station between the assay and sorting portions of the feed preparation line and the incinerator.

2.5.1. Drawings.

103Y-223018 D1 through D15	Treatment Development Facility, Modifications for Existing Large Storage Box
103Y-223030 D1 and D2	Treatment Development Facility, Large Storage Box and Side Ram Feeder Interface

2.5.2. Specifications. Specifications for the glovebox are contained in Ref. 2-1.

2.5.3. Sizing Calculations. The storage glovebox was selected to contain about 5 h of waste feed, which requires 67 ft^3 internal glovebox volume plus 50 ft^3 for manipulation of the boxes.

2.5.4. Equipment Costs. The storage glovebox was a surplus item upgraded and modified for our service by Altec, Inc., Albuquerque, New Mexico, at an approximate cost of $1000 in 1976.

REFERENCES

2-1. "Technical Specifications for Gloveboxes and Support Stands," Los Alamos Scientific Laboratory specification number H8-S184 (May 1975).

2-2. D. F. Jones, L. R. Cowder, and E. R. Martin, "Computerized Low-Level Waste Assay System," Los Alamos Scientific Laboratory report LA-2602 (February 1976).

2-3. "Video/Graphic Storage Terminal Maintenance Manual," American Science and Engineering document ASE-3796 (November 1975).

2-4. "Operations and Service Manual for AS & E Micro-Dose x-ray Inspection System Models 220/221/222," American Science and Engineering document ASE-3661 (November 1975).

2-5. "Semi-Automatic Feeder," Environmental Controls Products, Inc. specification number SR-1-173.

3.0 INCINERATOR

The incinerator is composed of a waste package loading system, a lower combustion chamber, an upper combustion chamber, an ash-removal system, and a control system to monitor and coordinate all of these components. Details of the ash-removal system are contained in Sec. 6, while incinerator controls are discussed in Sec. 7.

3.1. Side Ram

The side ram was designed at Los Alamos to move prepared waste packages from the feed preparation line to the main ram feeder. Each package is loaded through a rectangular slide door from the storage glovebox. This door and a similar door at the side ram exit provide good seals and allow the side ram to act as an airlock between the feed preparation line and the main ram feeder. The two major components in the side ram assembly are a pneumatically operated elevator and a chain-driven ram.

3.1.1. Drawings.

103Y-223001 D1 through D4	Elevator Safety Bar
103Y-223024 D1 through D26	Treatment Development Facility, Ram Feeder System, Side Ram and Elevator

3.1.2. Specifications. The functional specifications require the side ram to be designed with doors at the entrance and exit that provide a seal good enough to permit the unit to act as an airlock, that handle one or two boxes at the same time, that elevate a 60-lb load 2 ft, and that move the elevated load a minimum horizontal distance of 8.5 ft, at which point it is in front of the main ram.

The side ram mechanism is surrounded by an enclosure that provides containment. Windows and gloveports allow observation of the interior and permit periodic maintenance. The side ram driver is outside the enclosure. All penetrations of the enclosure are sealed.

Component specifications are on the side ram and elevator drawings in the bills of materials.

3.1.3. Sizing Calculations. Not applicable.

3.1.4. Equipment Costs. Equipment costs for the side ram and elevator also include modification to the main ram (see Sec. 3.2). Because this purchase required a lump sum bid, it can not be itemized. The total cost was $14,104 in 1974.

3.2. Main Ram

The semicontinuous waste feeder is a single ram, complete with drive mechanism and motors, that can charge two 1 ft × 1 ft × 2 ft packages simultaneously. Construction is standard structural steel material with welded assembly. The ram and load-bearing areas of the ram housing are 1/4-in. minimum thickness steel plate. Framing supports an additional load of 1000 lb to permit use as a loading platform.

The main ram is loaded by the side ram through a side door. A refractory-faced guillotine door, which opens during the charging cycle, separates the main ram from the lower chamber of the incinerator.

3.2.1. Drawings.

103Y-223023 D1 through D16	Treatment Development Facility, Main Ram Feeder Modifications
103Y-223036 D1 through D10	Treatment Development Facility, Main Ram Enclosure
ECP-50074A SR-22	Single Ram Feeder

3.2.2. Specifications. The main ram, as supplied to Los Alamos, was constructed to Environmental Control Products, Inc., Charlotte, North Carolina (ECP) specifications (Ref. 2-5) and was modified as follows.

- Argon gas was substituted for the standard water spray as a fire suppression agent.
- Main and side rams were enclosed to provide containment. Windows and gloveports in the enclosure allow observation of the interior and permit periodic maintenance.
- All penetrations of the enclosure were sealed.
- Low-pressure air is supplied to the enclosure to offset the displaced volume created by the main ram and waste package moving from the main ram housing.

Component specifications are listed in the bills of material on the main ram drawings.

3.2.3. Sizing Calculations. Not applicable.

3.2.4. Equipment Costs. The standard model SR-22 ram feeder cost was $2800 in 1974. Modification costs are included with the side ram and elevator costs (see Sec. 3.1.4).

3.3. Upper and Lower Combustion Chambers

The lower combustion chamber is designed to volatilize all combustibles in the waste packages and to retain a maximum amount of the ash product. Most of the oxidation of the combustibles also takes place in the lower chamber. The upper combustion chamber is designed to complete all combustion reactions on combustible gases and particles in the offgas from the lower chamber.

3.3.1. Drawings.

103Y-223020 D1	Treatment Development Facility, Spool Piece Between ECP Model 500T Chambers
103Y-223022 D1 through D8	Treatment Development Facility, Combustion Air System Containment Box
103Y-223025 D1	Treatment Development Facility, Spacer Between ECP Model 500T Chambers
103Y-223027 D1 and D2	Treatment Development Facility, Charging Opening Modifications, Containment
103Y-223028 D1 through D3	Treatment Development Facility, Support Stand for ECP 500T Incinerator
103Y-223055 D1 through D7	Treatment Development Facility, Ash-Removal Glovebox Assembly, Upper and Lower
103Y-223080 D1 through D18	Treatment Development Facility, Ash-Removal Doors
103Y-223094 D1 and D2	Treatment Development Facility, Sight Port
103Y-223096 D1 and D2	Guillotine Door Brake Release
103Y-223101 D1 and D2	Treatment Development Facility, Combustion Air System
ECP-500T, Set 500T	Incinerator Fabrication Drawings

3.3.2. Specifications. The incinerator is a dual chamber CAI suitable for burning type "O" (as defined by EPA) combustible waste materials complete with controls and systems necessary for safe operation and control.

3.3.2.1. Feed Capacity. The unit can burn type "O" waste or plastic-type materials at the rate of 375 lb/h. It can also operate at a reduced rate with waste at a caloric value of up to 20,000 Btu/lb. The unit can burn combustible feed components in any combination of caloric values up to 20,000 Btu/lb at a rate of 100 lb/h with supplementary natural gas feed as required to maintain combustion or operational temperature. The unit receives feed on a semicontinuous batch basis.

3.3.2.2. The unit operates in a starved air (pyrolysis) or excess air oxidation mode in the lower chamber and excess air oxidation mode in the upper chamber.

3.3.2.3. Operating Characteristics. The unit operates over a temperature range of 1500°F to 2000°F in the primary chamber through the use of supplementary natural gas fuel. Air is supplied to the primary chamber over a continuously variable flow rate of 25 ft^3/min to 250 ft^3/min (70°F and 11.31 in. W.G.) and to the secondary chamber at a continuously variable flow rate of 25 ft^3/min to 250 ft^3/min (70°F and 11.31 in. W.G.).

3.3.2.4. Refractory. The unit, including emission exhaust ducting, is lined with refractory suitable for 3000°F continuous service that will provide a maximum allowable skin temperature during operation of 250°F.

3.3.2.5. Construction. Construction of load-bearing sections and shells is 5/16-in. minimum thick steel with 3000°F castable refractory of thickness and density suitable for the specified operating conditions. Insulation between refractory and shell is at least 2-in. high-temperature block. All refractory anchors are No. 304 stainless steel. External emission exhaust ducting is a minimum of 11-gauge steel external shell with 3000°F castable refractory lining of thickness and density appropriate for specific operating conditons. The upper and lower chambers are modular to permit bolt-together, on-site assembly. Gasket seals are provided.

3.3.2.6. Air Supply. Combustion air supply and burner air supply are by centrifugal fans.

3.3.2.7. Burners. Combustion burners are rated at 1,500,000 Btu maximum output and are adjustable to suit operation requirements. Gas burners are suitable for natural gas or propane operation and develop maximum rating with 3-in. W.G. gas pressure at the burners. All fittings, regulators, and control valves are Underwriters Laboratory, Chicago, Illinois, approved and assembled to meet the standards of Industrial Risk Insurers, Chicago, Illinois, or other authority where applicable.

3.3.2.8. Emissions. The incinerator exhaust emissions contain less than 0.07 grains of particulate per standard cubic foot corrected to 12% CO_2 when incinerating type "O" wastes at rated capacity as specified above.

3.3.2.9. Other Specifications. For the type of service in the Los Alamos operation, the incinerator required these modifications.

- Installation of a mastic coating between the refractory and metal shell to protect the shell from acid attack,
- Addition of large sight ports,
- Addition of a steam injection system,
- Addition of more complex control devices for safety, data acquisition, and closer control of operations (see Sec. 7),
- Addition of a large cleanout door to the upper chamber,
- Modification of all flanges to assure good sealing,
- Redesign of the system for injection of secondary air, and
- Addition of gloveboxes to enclose burners, combustion air and secondary blowers and controls, and cleanout doors.

Component specifications are listed in the bills of material located on the referenced drawings.

3.3.3. Sizing Calculations. At Los Alamos, the average waste composition has a heating value of 13,143 Btu/lb. At times, the Los Alamos CAI is expected to burn single components of the waste mixture. Polyethylene and polyisoprene, two components of the design basis feed, both have heating values of about 18,500 Btu/lb.

The design of the ECP incinerator specifies a maximum heat density of about 15,000 Btu/ft^3·h at sea level. Therefore, an incinerator designed to burn 100 lb/h of Los Alamos waste will be required to have a minimum volume of

$$\frac{100 \times 18{,}500}{15{,}000} \times \frac{14.7}{11.3} = 160 \text{ ft}^3 .$$

The ECP-300T incinerator has a volume of 102 ft^3, and the ECP-500T has a volume of 200 ft^3; therefore, the ECP-500T was specified for Los Alamos service.

3.3.4. Equipment Costs. The standard model ECP-500T incinerator cost was $35,285 in 1974. Additional options purchased with the incinerator included

	1974 $
Sightports	139
Large cleanout doors	500
Mastic lining	3879
Ash cleanout port	576
Total	$5094

The secondary air injector, designed at Los Alamos and manufactured by John Zink Co., Tulsa, Oklahoma, was purchased on a lump sum bid basis along with high-temperature refractory-lined ductwork that joins the incinerator with the offgas cleaning system. The combined price was $11,882 in 1976. John Zink also supplied the steam injection system for $650 in 1976.

The combustion air glovebox enclosure was designed at Los Alamos and manufactured by Altec, Inc., Albuquerque, New Mexico. Its cost was $8360 in 1976.

The enclosure for the upper and lower ash cleanout doors and modification so the door would slide to the side rather than swing out were designed and fabricated at Los Alamos at a cost of $28,535 in 1976.

4.0 OFFGAS CLEANUP

The offgas train consists of a quench tower, a high-energy venturi scrubber, an absorber tower, a condenser/demister, a superheater, roughing and HEPA filters, redundant induced-draft blowers, and a control system to monitor and control each component.

4.1. Quench Tower

The quench tower, high-energy venturi scrubber, and absorber tower were designed by John Zink Co., Tulsa, Oklahoma, to remove particles and mineral acids from the offgas stream.

By cooling and humidifying the offgas from the incinerator, the quench tower protects the remaining offgas components from overheating and enhances the performance of the venturi scrubber and absorber tower.

An important feature of the quench tower is a wetted wall section located in the cooling section of the tower which presents a cool wet surface on which compounds such as metallic oxides tend to plate out following condensation. The water film continuously washes the area.

The two major components of the quench tower are the contactor section, which introduces a water mist into the hot stream, and the separator, which removes excess water from the offgas stream.

4.1.1. Drawings.

103Y-223021 D1 through D3	Treatment Development Facility, Transition Duct and Expansion Joint
103Y-223031 D1	Treatment Development Facility, Duct Support Wall Mount
103Y-223081 C1	Treatment Development Facility, Spray Lance
John Zink Co. B-0-78037, 202	General Assembly Side Elevation and Anchor Bolt Plan
John Zink Co. B-0-78037, 301 through 303	Quench Details

4.1.2. Specifications. These specifications are common to the quench tower, high-energy venturi scrubber, and absorber tower. These three components of the offgas treatment system were designed, fabricated, and supplied by John Zink Co.

The system cools 3535 lb/h of combustion gas from a maximum temperature of 2300°F to saturation or subcooled conditions. It removes 99+ wt% of particles and reduces HCl concentrations in the offgas to 25 ppm maximum.

The venturi can operate over a pressure drop range of 15 to 83 in. W.G. at design gas-flow rates and has components to permit continuous adjustment of operating pressure drop.

The system is designed to handle a combustion gas stream with this composition and under these conditions.

Component		lb/h
N_2		2592
O_2		389
CO_2		321
H_2O		176
HCl		57
SO_2		trace
NO_2		trace
	Total	3535
Temperature		2300°F
Pressure		11.24 psia
Mol wt		28.66

Particle flyash associated with the combustion gas stream is approximately as follows.

Particle Diam (μm)	wt%
Greater than 10	10
5 — 10	20
2 — 5	40
1 — 2	20
0.5 — 1	10
Specific gravity	2.0
Particle loading	0.10 grains/standard ft^3

Recycle liquid solution is supplied to the system by Los Alamos as follows.

Flow rate	50 gal/min
Pressure	vendor to specify
Temperature	100 to 120°F
Specific gravity	1.0 to 1.1

Design basis analysis of the recycle solution is

Component	wt%
H_2O	88 to 100
HCl	0 to 1
SO_3, SO_4	trace
NO_2, NO_3	trace
Suspended solids	maximum diam, 30 μm

The system can satisfy the performance requirements of Sec. 5 when operating with recycle solution of the following analysis.

Component	wt%
H_2O	80 to 95
NaOH	0 to 5
$NaHCO_3$	0 to 5
NaCl	0 to 15
Na_2SO_3, SO_4	0 to 4

The system consists of an adiabatic combustion gas-quench solution contacting chamber, a high-energy venturi scrubber with adjustable throat, and a packed-column absorber with liquid de-entrainer.

The quench chamber is designed to operate at internal vacuums of up to 16 in. W.G. The venturi and absorber are designed to operate at up to 110-in. W.G. vacuum and 250°F maximum temperature.

Materials of construction were selected for corrosion resistance and compatibility with process streams.

4.1.3. Sizing Calculations. Performed by vendor.

4.1.4. Equipment Costs. Equipment costs for the quench tower include the cost of the venturi scrubber and absorber tower. Because this purchase required a lump sum bid, it can not be itemized. The total cost was $24,318 in 1975.

4.2. High-Energy Venturi Scrubber

The high-energy venturi scrubber removes particles from the offgas stream by impaction with an injected water stream that is shattered into small droplets by a high-velocity offgas stream.

4.2.1. Drawings.

John Zink Co. B-0-78037, 201	General Assembly Side Elevation and Anchor Bolt Plan
John Zink Co. B-0-78037, 303	Quench Pot Details
John Zink Co. B-0-78037, 304	Absorber Details

4.2.2. Specifications. On drawings; see Sec. 4.2.1. See also Sec. 4.1.2.

4.2.3. Sizing Calculations. Not available; performed by vendor.

4.2.4. Equipment Costs. Cost of the high-energy venturi scrubber is part of the overall cost of equipment supplied by John Zink Co. (see Sec. 4.1.4).

4.3. Absorber Tower

The absorber tower removes from the offgas mineral acids that are generated during combustion.

4.3.1. Drawings.

John Zink Co. B-0-78037, 201 General Assembly Side Elevation and Anchor Bolt Plan
John Zink Co. B-0-78037, 304 Absorber Details

4.3.2. Specifications. See Sec. 4.1.2.

4.3.3. Sizing Calculations. Performed by vendor.

4.3.4. Equipment Costs. The cost of the absorber tower is part of the overall cost of equipment supplied by John Zink Co. (see Sec. 4.1.4).

4.4. Condenser/Demister and Reheater

The condenser/demister and reheater module conditions the offgas before HEPA filtration by removing most of the water vapor and by inducing a superheat on the offgas stream. As a result, the gas stream is in a dry state, which allows it to be filtered without the potential problem of blinding the filter medium with condensate. The lower volume of offgas permits the use of smaller equipment downstream.

4.4.1. Drawings.

103Y-223056 D1 through D4 Process Vent System, Support Framing Plan and Structural Details

4.4.2. Specifications. The offgas stream to the cooler-condenser is a water-saturated combustion gas stream with composition and properties as follows.

Component	lb/h
H_2O	1328
N_2	2592
O_2	389
CO_2	321
HCl	<1 (25 ppm max)
Total	4630
Pressure	9.40 psig
Temperature	150°F
Mol wt	24.72

Cooling water is available at 80°F maximum temperature and 75 psig pressure.

The cooler-condenser unit cools the gas stream to 120°F and condenses approximately 600 lb/h of water from the vapor stream (outlet gas saturated at 120°F).

Water coils are circuited to provide complete drainability without removing individual plugs from each tube and have a removable header to permit tube access for mechanical cleaning.

Materials of construction are manufacturer's standard for this service except that all surfaces exposed to the gaseous stream are coated with phenol-formaldehyde thermo-setting resin.

4.4.3. Sizing Calculations. The condenser/demister and reheater module was sized to accommodate each element. Sizing of the condenser coil was performed by McQuay-Perfex, Inc., Minneapolis, Minnesota; the demister by Hell Process Equipment Co., Avon, Ohio; and the reheater coil by Chromalox Div., Emerson Electric, Monroeville, Pennsylvania.

4.4.4. Equipment Costs. The condenser/demister and reheater module was designed at Los Alamos and fabricated by Singleton Sheet Metal Works, Pueblo, Colorado, at a cost of $9240 in 1976. In 1976, the condenser coil cost $1747; the demister cost $485; and the electric resistance heater cost $2000.

4.5. HEPA Filters

The HEPA filters provide final filtration of the offgas stream before venting to the atmosphere.

4.5.1. Drawings.

103Y-223051 D1 through D3	Treatment Development Facility, Pressure Equalizer HEPA Filter
103Y-223056 D1 through D4	Process Vent System Support Framing Plan and Structural Details

4.5.2. Specifications. Functional specifications for the HEPA filter system require that the offgas stream be filtered for 99.97% of all particles greater than 0.3 μm in diameter.

Additional requirements are that the offgas must pass first through a fire screen which serves to protect the filter medium in the event that heater elements fail and pass into the filter housing. The gas then passes through a roughing filter which serves to remove larger particles and thereby extend HEPA filter service life. Two banks of HEPA filters are placed in series to provide a backup system should there be a breach of the first bank.

The HEPA filter module must be constructed to withstand a maximum 110-in. W.G. negative pressure.

4.5.3. Sizing Calculations. The HEPA filter system must be sized to handle 1630 ACFM nominal capacity. Therefore, each filter bank contains two 2 ft × 2 ft parallel filters rated at 1000 ACFM each.

4.5.4. Equipment Costs. The HEPA filter housings were supplied by Flanders Filters, Inc., Washington, North Carolina, at a cost of $4835 in 1976. The external pressure housing for the Flanders units was designed at Los Alamos and was fabricated by Singleton Sheet Metal Works, Pueblo, Colorado, at a cost of $4568 in 1976.

4.6. Induced-Draft Blowers

The induced-draft blowers provide the motive force to draw the offgas through the offgas cleaning system. The blowers were supplied by Spencer Turbine Co., Hartford, Connecticut.

4.6.1. Drawings.

Spencer Turbine Co. C-21794-482	Outline Dimensions of a 4 Bearing Outboard Gas Booster
Spencer Turbine Co. CU-117	Performance Curve of a Spencer Gas Booster

4.6.2. Specifications. The induced-draft blower is a high-head type with electric motor driver designed to exhaust combustion gases from a gas scrub system. Each blower can supply an output pressure of 11.31 psia static pressure (discharge to atmosphere at 7500-ft altitude) when supplied with gas with properties as follows.

Component		lb_m/h
CO_2		330
H_2O vapor		534
NO_2		2369
O_2		712
	Total	3945

Av mol wt	27.40
Dewpoint temperature	120°F
Operating temperature at inlet	140°F
Operating pressure at inlet	8.31 psia static pressure

4.6.3. Sizing Calculations. Performed by vendor.

4.6.4. Equipment Costs. The first blower was purchased for evaluation in 1975 at a cost of $8433. The second identical blower was purchased in 1977 at a cost of $9223.

5.0 SCRUB-SOLUTION RECYCLING

Major components of the scrub-solution recycling system are process liquid filters, a process liquid heat exchanger, a process sump tank, quench liquid filters, a pH control system, a primary heat exchanger, cooling towers, pumps, and piping.

5.1. Process Liquid Filters

The process liquid filters remove from the scrubbing liquid particles removed from the offgas by the quench tower, venturi scrubber, and absorber tower.

5.1.1. Drawings.

103Y-223006 D1	Liquid Filter Glovebox
103Y-223037 D1 through D4	Treatment Development Facility, Liquid Filter Glovebox
Commercial Filters 9446-0102 C1	Final Assembly Model CFP-12D-10-2F
Commercial Filters 1840-5150 C1	Cover Assembly Model CF-12

5.1.2. Specifications. The liquid filter glovebox was constructed according to specifications in Ref. 2-1.

The process liquid filter specifications are these.

Manufacturer	Commercial Filters Division, Carborundum Co., Lebanon, Indiana
Model	CFP-12D-10-2F, Penton® lined
Performance	180 gal/min minimum capacity, 12 filter tubes, 20-in. tube length, 100-μm filter pore size, 100-psi pressure rating

5.1.3. Sizing Calculations. The maximum calculated liquid flow rate through the process filter is 30 gal/min (12 gal/min weir, 8 gal/min spray, 5 gal/min venturi, 5 gal/min absorber tower). Based on information from users of filters in other offgas cleanup systems, the decision was made to oversize these filters at least four times. The capacity split for this brand of filter was 90 gal/min and 180 gal/min. The latter was chosen for the Los Alamos process.

5.1.4. Equipment Costs. The liquid filter glovebox was fabricated by Stainless Equipment Co., Englewood, Colorado, at a cost of $7071 in 1976.

The process liquid filters (two each) were supplied by the vendor at a cost of $2100 each in 1976.

5.2. Process Liquid Heat Exchanger

The process liquid heat exchanger cools the liquid effluent from the offgas cleanup system before storage and recirculation and thereby increases its effectiveness as an offgas coolant and scrubbing medium.

5.2.1. Drawing.

Carborundum Co. 3035 A-1 Model 195 Size 18 Impervite Tube and Shell Heat Exchanger

5.2.2. Specifications. The water-cooled heat exchanger must handle process solution with this composition. Purchase specifications required these properties.

Component	wt%
H_2O	88 to 100
HCl	0 to 10
SO_3, SO_4	0 to 2
NO_2, NO_3	trace
Specific gravity	1.0 to 1.1

In addition to the normal scrub solution, the heat exchanger may need to handle an alkaline scrub solution of the following composition.

Component	wt%
H_2O	80 to 95
NaOH	0 to 5
$NaHCO_3$	0 to 5
NaCl	0 to 15
Na_2SO_3, SO_4	0 to 2

The scrub solution may also contain from 0.0 to 1.0 wt% flyash as suspended solids of less than 100-μm diam.

Physical properties of the fluids are these.

	Process Side	Coolant Side
Fluid	**dilute acid**	**tower water**
Specific gravity	**1.05**	**1.0**
Specific heat (Btu/lb·°F)	**0.95**	**1.0**
Viscosity (cp)	**1.0**	**1.0**
Thermal conductivity (Btu/h·ft·°F)	**0.35**	**0.35**

Design performance requirements for the unit are these.

Design duty, 900,000 Btu/h

	Process Side	Coolant Side
Fluid	**dilute acid**	**tower water**
Flow (lb/h)	**15,750**	**20,000 max**
Temperature in (°F)	**180**	**75 max**
Temperature out (°F)	**120**	**vendor to specify**
Maximum available pressure (psi)	**---**	**75**
Minimum required outlet pressure (psi)	**50**	**---**
Maximum operating temperature (°F)	**220**	**150**
Fouling factor	**0.001**	**0.0015**

The unit operates with process solution at 5 psi minimum below outlet coolant pressure to prevent leakage of process fluid containing radioactive contamination into coolant.

Materials of construction must be selected for corrosion resistance and compatibility with process streams described in Sec. 2.

The heat exchanger was supplied by Carborundum Co., Solon, Ohio. Model 195, size 18 satisfies the above requirements with a calculated coolant side outlet temperature of 120°F.

5.2.3. Sizing Calculations. Performed by the manufacturer.

5.2.4. Equipment Cost. The cost of the process liquid heat exchanger was $6580 in 1975.

5.3. Process Sump Tank

The process sump tank provides surge capacity for the recycled process liquid and serves as a vessel for backmixing in the pH control system. Process liquid blowdown is from the sump tank in response to high specific gravity or high tank-liquid level.

5.3.1. Drawings.

ENG-6-743 Outline Drawings, Scrub Receiver and Waste Receiver Tank

5.3.2. Specifications. Purchase specifications included the following requirements. The tank needs to handle a liquid solution with this composition.

Component	wt%
H_2O	88 to 100
HCl	0 to 10
SO_3, SO_4	0 to 2
NO_2, NO_3	trace
Normal capacity of tank	**500 gal**
Temperature	**180°F max**
Specific gravity	**1.0 to 1.1**

The scrub solution may also contain from 0.0 to 1.0 wt% flyash as suspended solids (maximum diameter, 30 μm).

Materials of construction should be corrosion resistant and compatible with process streams. In addition to the streams described in Sec. 2, construction materials should also be compatible with an alkaline (NaOH or KOH) and a bicarbonate scrub cycle ($KHCO_3$) resulting from full or partial neutralization of the solution described in Sec. 2.

5.3.3. Sizing Calculations. Not applicable.

5.3.4. Equipment Costs. The sump tank was fabricated by Joseph T. Ryerson and Son, Inc., Denver, Colorado, at a cost of $2294 in 1975.

5.4. Quench Liquid Filters

Part of the process liquid is recycled to serve as a quench and scrubbing medium. The portion of the recycled liquid supplied to the quench tower is filtered for the second time as assurance that the weir and spray nozzles will not be plugged by particles entrained in the liquid.

5.4.1. Drawings. See Sec. 5.1.1.

Commercial Filters 9446-0100 C1 Final Assembly Model CFR-6
Commercial Filters 1840-5139 C1 Cover Plate Assembly CFR-6

5.4.2. Specifications. The quench liquid filter specifications are these.

Manufacturer	Commercial Filters Division, Carborundum Co., Lebanon, Indiana
Model	CFP-6-10-2F Penton® lined
Performance	45 gal/min capacity, 6 filter tubes, 10-in. filter length, 20-μm filter pore size, 100-psi pressure rating

5.4.3. Sizing Calculations. The maximum calculated liquid flow rate to the quench tower is 20 gal/min (12 gal/min weir, 8 gal/min sprays). The Commercial Filters model with twice the calculated capacity requirement was chosen.

5.4.4. Equipment Costs. See Sec. 5.1.4.

The quench liquid filters (two each) were supplied by Commercial Filters at a cost of $1500 in 1976.

5.5. Primary Heat Exchanger

The primary heat exchanger serves as an intermediate exchanger between the process liquid heat exchanger and the cooling towers. Such a system permits a closed loop for coolant used with the process liquid heat exchanger and thereby assures positive containment of process liquid.

5.5.1. Drawing.
Tranter D-38102-1166 Superchanger Model UX-216-HJ-24

5.5.2. Specifications. Purchase specifications for the primary heat exchanger are these.

Type	**Plate and frame**
Maximum heat transfer	**900,000 Btu/h**

	Process Side	Coolant Side
Chemical composition	**hot water**	**cold water**
Inlet temperature (°F)	**120**	**65**
Outlet temperature (°F)	**75**	**100**
Flow rate (gal/min)	**40**	**50**
Maximum pressure drop (psi)	**10**	**20**
Maximum working pressure (psi)	**60**	**60**
Amount of undissolved solids	**trace**	**trace**
Flow fluctuations	**none**	**none**

The hot fluid should be water that contains a small amount of potassium dichromate. The cold fluid should be water from an evaporative cooling tower loop. Plate material should be No. 316 stainless steel.

5.5.3. Sizing Calculations. Not applicable.

5.5.4. Equipment Costs. The primary heat exchanger was supplied by Tranter, Inc., Lansing, Michigan, at a cost of $2662 in 1978.

5.6. Pumps

The CAI process uses five major liquid pumps for transfer of process liquid, scrubber liquid, condensate, process liquid heat exchanger coolant, and primary heat exchanger coolant.

5.6.1. Process Liquid Pump. The process liquid pump transfers recycled process liquid from the process liquid sump to the offgas scrubber system.

5.6.1.1. Drawing.
Fybroc C41327 Model 5108 Vertical Pump

5.6.1.2. Specifications. Purchase specifications included these requirements.

	Liquid Characteristics
Liquid	**0-10% HCl or alkaline salt solution**
Specific gravity	**1.05**
Vapor pressure (psia)	**3.7**
Viscosity (cp)	**1.0**
Temperature (°F)	**150**
	Performance Requirements
Flow (gal/min)	**50**
Discharge pressure (psia)	**121.5**
Differential head (ft)	**242**
Suction pressure (psia)	**11.5**
Differential pressure (psi)	**110**
Net positive suction head (ft)	**18**

5.6.1.3. Sizing Calculations. The pump capacity must satisfy the maximum requirements of the scrubbing system (30 gal/min), plus about 15 gal/min that is mixed with caustic and then with the input stream to the sump tank in the pH control scheme, plus 10% overage: $(30 + 15) \times 1.1 = 49.5$; specify 50 gal/min.

The pump head must be sufficient for the spray nozzle requirements (80 psi) elevation difference (5 psi), pressure drop across filter (15 psi), plus 10% overage: $(80 + 15 + 5) \times 1.1 = 110$ psi.

5.6.1.4. Equipment Costs. The process liquid pump was supplied by Fybroc, Inc., Hatfield, Pennsylvania, at a cost of $4230 in 1975.

5.6.2. Scrubber Liquid Pump. The scrubber liquid pump transfers combined process liquid from the base of the quench tower and absorber tower through the process liquid filters and process liquid heat exchanger to the process liquid sump tank.

5.6.2.1. Drawing.

Vanton A-9-0713B-01-1 Mounting Dimensions for CG-300B, CG-500 Centrifugal Pump

5.6.2.2. Specifications. The specifications for the scrubber liquid pump are these.

	Liquid Characteristics
Liquid	**0-10% HCl or alkaline salt solution**
Specific gravity	**1.05**
Vapor pressure (psia)	**4.7**
Viscosity (cp)	**0.8**
Temperature (°F)	**160**
	Performance Requirements
Flow (gal/min)	**33**
Discharge pressure (psia)	**50.0**
Suction pressure (psia)	**9.7**
Differential pressure (psi)	**40.3**
Net positive suction head (ft)	**11.5**

5.6.2.3. Sizing Calculations. The pump capacity must satisfy the maximum requirement of the scrubber system (30 gal/min) and combined pressure losses of the level control valve, liquid filter, and heat exchanger: (10 + 15 + 10) × 1.1 = 38.5 psig.

5.6.2.4. Equipment Costs. The scrubber liquid pump was supplied by Vanton Pump and Equipment Corp., Hillside, New Jersey, at a cost of $1248 in 1975.

5.6.3. Condensate Pump. The condensate pump transfers condensate from the condensate sump to the process liquid sump.

5.6.3.1. Drawings. Drawings for CG-200 are available from the manufacturer, Vanton Pump and Equipment Corp., Hillside, New Jersey.

5.6.3.2. Specifications. The specifications for the condensate pump are these.

	Liquid Characteristics
Liquid	**0-10% HCl solution**
Specific gravity	**1.0**
Vapor pressure (psia)	**0.95**
Viscosity (cp)	**1.0**
Temperature (°F)	**100**
	Performance Requirements
Flow (gal/min)	**20**
Discharge pressure (psia)	**30.3**
Suction pressure (psia)	**9.7**
Differential pressure (psi)	**20.6**
Net positive suction head (ft)	**20.2**

5.6.3.3. Sizing Calculations. The pump capacity was set at 20 gal/min. The pump pressure must equal the control valve pressure drop and a 20-ft change in elevation: (10 + 8.7) × 1.1 = 20.6 psi.

5.6.3.4. Equipment Costs. The condensate pump was supplied by Vanton Pump and Equipment Corp., Hillside, New Jersey, at a cost of $1061 in 1975.

5.6.4. Process Liquid Heat Exchanger Coolant Pump and Primary Heat Exchanger Coolant Pump. These two pumps are identical. Each supplies coolant to heat exchangers with similar capacities.

5.6.4.1. Drawings.

Goulds 107-67 Rev. 3	Model 3655, Groups S & M
Goulds SA655	Model 3655, Sectional Assembly

5.6.4.2. Specifications. The specifications for the process liquid heat exchanger coolant pump and primary heat exchanger coolant pump are these.

Manufacturer	Goulds Pumps, Inc., Seneca Falls, New York
Model	3655-S1 1/4 × 1 1/2 × 7, 5 1/2-in. impeller
Performance	50 gal/min, 43 psig at 120°F, 1.0 specific gravity

5.6.4.3. Sizing Calculations. Each heat exchanger requires a flow of about 50 gal/min. Pressure drop requirement is 10 psi for a control valve, 20 psi for the exchanger, and about 5 psi for change in elevation: $(10 + 20 + 5) \times 1.1 = 38.5$ psi.

The Goulds standard pump supplies 50 gal/min at 43 psig.

5.6.4.4. Equipment Costs. Each pump was a replacement for other pumps that proved unsatisfactory for this service. Goulds supplied these pumps at a cost of $719 each in 1978.

5.7. Piping

All piping containing process liquid is fiberglass-reinforced plastic. All piping in the condensate system is No. 304 stainless steel. Smaller piping is Type E-100, supplied by Conley Corp., Tulsa, Oklahoma.

5.7.1. Drawings. Not applicable.

5.7.2. Specifications. Piping that is 2-in. nominal diameter and larger was Type CI-2030 supplied by Fibercast Co., Sand Springs, Oklahoma.

5.7.3. Sizing Calculations. Not applicable.

5.7.4. Equipment Costs. Not applicable.

6.0 ASH REMOVAL, PACKAGING, AND TRANSPORT

Two methods are employed for removing ash from the CAI: (1) the gravity ash dropout system (GADOS) and (2) the vacuum ash-removal system.

The ash-transport system transfers the ash that is removed by either system to the ash-packaging station, which provides a safe means for bagging the ash into storage containers.

6.1. GADOS

The GADOS includes a pneumatically operated, refractory-lined, ash-dropout door at the bottom of a pit located at the end of the incinerator hearth. It allows ash to be removed from the lower chamber during high-temperature operations.

6.1.1. Drawings.

103Y-223060 D1 through D11, C12 through C15, B16 through B20	GADOS, Ash Door Linkage
103Y-223061 D1, C2 through C6, B7 through B16	GADOS, Delumper
103Y-223062 D1 through D7, C8, B9	GADOS, Ash Door Housing
103Y-223063 D1, C2	GADOS, Grate Assembly
103Y-223064 D1 through D3	GADOS, Lower Hopper

103Y-223065 D1	GADOS, Final Assembly
103Y-223066 C1 through C4	GADOS, Ash Door Housing, Bagout Cover
103Y-223067 D1 and D2	GADOS, Incinerator Refractory Mold
103Y-223068 D1 through D3	GADOS, Adaptor Plate
103Y-223069 D1 and D2, C3	GADOS, Delumper Cleanout Doors
103Y-223070 D1, C2	GADOS, Door Refractory Mold
103Y-223071 D1	GADOS, Actuator Bracket, Right
103Y-223072 D1	GADOS, Upper Gasket
103Y-223073 D1	GADOS, Lower Gasket
103Y-223074 C1	GADOS, Bagout Cover Gasket
103Y-223075 C1	GADOS, Ash Door Guide Rod
103Y-223076 D1	GADOS, Actuator Bracket, Left
103Y-223077 D1	GADOS, Emergency Actuator Handle

6.1.2. Specifications. The GADOS is an in-house design. Functional requirements include:

- An ash-dropout door extending the full width of the hearth that can withstand the 2000°F maximum temperature of the lower chamber, that can invert when opening to clear the door of ash, and that can be manually operated if required;
- A grate under the door that can intercept objects too large to be pneumatically transported through a 4-in. line and can be fitted with a delumping device to break up friable material and allow retrieval of intercepted materials; and
- A hopper under the grate that can withstand the 200°F temperature induced by the falling ash and can contain several cubic feet of ash before it is transported to the ash-packaging station.

Actual specifications for purchased equipment were these.

Component	Manufacturer	Model
Actuator	**Greer Hydraulics, Inc. Los Angeles, Calif.**	**BV40-MS-TS-C-C-EG-301 & 302 Accutorque**
Vibrator	**Eriez Magnetics Erie, Pa.**	**405**
Ball Valves	**Worchester Controls, Inc. West Boylston, Mass.**	**D-38, mount kit No. MK-38**

6.1.3. Sizing Calculations. Not applicable.

6.1.4. Equipment Cost. The GADOS was built in-house with funds from the Los Alamos FY 1976 operating budget. Cost of the two actuators, vibrator, and valves totalled $3198 in 1978.

6.2. Vacuum Ash-Removal System

The vacuum ash-removal system consists of manually positioned hoses connected to the ash-transport system which permit final cleanup of each chamber when the incinerator is shut down and is cool. Access to each chamber for this cleaning is through cleanout doors mounted on the end of each chamber.

6.2.1. Drawings. Not applicable.

6.2.2. Specifications. See Sec. 6.1.2 for specifications for the two ball valves.

6.2.3. Sizing Calculations. Not applicable.

6.2.4. Equipment Cost. The two ball valves cost a total of $1125 in 1978.

6.3. Ash-Transport System

The ash-transport system pneumatically transfers ash from the incinerator to the ash-packaging station where the ash is separated from the transporting air and is stored. The major components are a transport tubing, a cyclone separator, a rotary airlock valve, an ash hopper, porous metal filters with a blowback system, a HEPA filter, and a positive displacement blower.

6.3.1. Drawings.

103Y-223079 D1 through D8	Treatment Development Facility, Vacuum Ash-Transport System
Fisher-Klosterman FK-674101 XQ7(S)	Cyclone with Scroll Outlet
Mott SK-800	Blowback Nozzle Assembly
Mott SK-801	Nozzle Arrangement
Flanders 02477	G1-CCF Housing
Gardner Denver C-4208	Outline Dimensions of 3 LDL-F Series Cycloblower w/V-Belt Drive
Goyen 609199	Assembly RCA 20T
Goyen 609462	Assembly RCA6-V383

6.3.2. Specifications.

Component	Manufacturer	Model	Performance
Cyclone	Fisher-Klosterman, Inc. Louisville, Ky.	XA-75 size XQ-7 with scroll inlet and outlet	376 ft^3/min capacity at 2.5-in. pressure drop, 12.1-μm critical particle size at 2 and 1/2-in. pressure drop
Rotary airlock feeder	Prater Industries, Inc. Chicago, Ill.	PAV-6 C	0.1 ft^3/revolution (2.0 ft^3 at 20 RPM)
Porous metal filters	Mott Metallurgical Farmington, Conn.	B6085 venturis with 2 and 3/4-in. o.d. 36 in. long, 0.05-in. minimum wall thickness, 5-μm mean pore size filters	
Blowback	Goyen Controls Lakewood, N. J.	Diaphragm valves RCA-20T control valves RCA6-V353 program controller T-1366	
Positive displacement blower	Gardner-Denver Co. York, Pa.	3CDL-8	Displacement 300 ft^3/min, vacuum 110 in. W.G. at 7000 ft

6.3.3. Sizing Calculations. The velocity required for ash transport is 2000 ft/min for light materials such as sawdust and 3000 to 4000 ft/min for medium weight materials such as grain.

The incinerator ash is lightweight with occasional grain-size and -weight particles. Therefore, a velocity of about 3000 ft/min was chosen. The blower supplied is rated 110-in. W.G. pressure drop for 300 ft^3/min at 7000-ft elevation.

The velocity using 4-in., 16-gauge tubing and rated flow is 3650 ft/min. The pressure drop required is that for the cyclone (6 in. W.G.), sintered-metal filters (56 in. W.G.), and the HEPA filters (4 in. W.G.). A 50% overage is desirable to aid in clearing blockages that occur from time to time in the transfer line: $(6 + 56 + 4) \times 1.5 = 99$ in. W.G. minimum.

6.3.4. Equipment Cost. The filter housing, hopper, and connecting ductwork were designed and fabricated at Los Alamos. Costs for purchased equipment in 1976 were $2300 (cyclone), $1535 (rotary airlock), $5115 (sintered-metal filters), $650 (blowback valves), and $2591 (blower).

6.4. Ash-Packaging System

The ash-packaging system allows bagout of ash before disposal. It is an extension of the ash-transport system and consists of a glovebox containing two ball valves in series at the discharge from the ash-storage hopper. Bagout mechanisms are attached to the lower of the two ball valves and to the bottom of the glovebox.

6.4.1. Drawings.

103Y-223049 D1	Treatment Development Facility, Ash-Packaging Glovebox
103Y-223097 D1 through D3	Treatment Development Facility, Vacuum Ash-Removal Support Structure

6.4.2. Specifications. The specifications for the ash-packaging glovebox are given in Ref. 2-1; the specifications for the vibrator and ball valves are the same as those for the GADOS (see Sec. 6.1.2).

6.4.3. Sizing Calculations. The volume of the ash hopper is 12 ft^3.

6.4.4. Equipment Cost. The ash-packaging glovebox was fabricated by Stainless Equipment Co., Englewood, Colorado, for $2604 in 1976. In 1976, the ball valves and actuators were $1702 and the vibrator with control was $371.

7.0 INSTRUMENTS AND CONTROLS

The CAI instrumentation monitors and controls all parameters of the incineration process and its associated utilities to insure safe operation for personnel and equipment and to accumulate information for data reduction.

7.1. Feed Preparation

Operations in the waste feed preparation line are sequential but are not tied together by a central control system. Each station is operated on a need basis, independent of neighboring operations.

7.1.1. Drawings. Not applicable.

7.1.2. Specifications. Not applicable.

7.1.3. Sizing Calculations. Not applicable.

7.1.4. Equipment Costs. Not applicable.

7.2. Incinerator

The side ram, main ram, and guillotine loading door operate in sequence in response to logic embodied in the control ladder wiring system. The incinerator temperature, pressure, and excess oxygen content in the offgas from each chamber are maintained by fully modulating controllers. In addition, the control system for the incinerator and incinerator loading equipment includes logic and devices for proper burner startup, flame safeguards, and orderly shutdown.

7.2.1. Drawings.

103Y-223003 D1	Logic Diagram, Incinerator Loading System
103Y-223004 D1 through D16	Combustion Control Rack Wiring Diagram
103Y-223009 D1 through D5	Flow Control Rack Wiring Diagram
103Y-223058 D1 through D4	Piping and Instrument Diagram, Treatment Development Facility Incinerator

7.2.2. Specifications. Specifications for elements illustrated in each control panel wiring diagram are listed in Table 7-1 and carry the same item numbers found in drawings 103Y-223004, 103Y-223007, 103Y-223008, 103Y-223009, and 103Y-223059.

Pertinent field mounted elements are listed in Table 7-2 and are numbered according to the system used in drawing 103Y-223058.

7.2.3. Sizing Calculations. The only sizing calculations performed by Los Alamos were for selection of flow control valves. Following are examples of sizing calculations for Fisher valves used by Los Alamos for air, natural gas, steam, and water.

Sizing calculations for the secondary air valve are these. (See also Sec. 3.3.3.)

Known:
- Secondary air injector, ductwork, and flowmeter require 4.97-in. W.G. static pressure at 488-ACFM air.
- Examination of the blower curve for the available secondary air fan, which has been corrected for 11.31-psia inlet pressure at 100°F, indicates a total available static pressure of 5.90 in. W.G. at 488-ACFM air.
- Use of Fisher 7800 series butterfly valve with conventional disk is assumed.

Therefore:
- Supply pressure $P_1 = 11.34$ psia.
- Pressure drop $P_2 = 0.034$ psi.
- Specific gravity $G = 1.0$.
- Temperature $T = 560°R$.
- Flowrate $Q = 19{,}500$ SCFM.
- Ratio of gas to liquid sizing coefficients $C_1 = 24.5$ (from Fisher catalog 10 for conventional disk, 60% open; a butterfly valve with conventional disk performs best when not controlling above 60% open).
- Calculated gas sizing coefficient:

$$C_{gc} = \frac{Q}{\left(\frac{520}{GT}\right)^{1/2} P_1 \sin\left[\frac{3417}{C_1}\left(\frac{P_2}{P_1}\right)^{1/2}\right]} = 13{,}428 \ .$$

Actual gas sizing coefficient $C_{gs} = 11{,}800$ for 5-in. valve and 18,800 for 6-in. valve. Select 6-in. valve.

Sizing calculations for the upper burner fuel gas valve are these.

Known:
- Maximum burner heat release is 1,500,000 Btu/h.
- Fuel gas heating value is 960 Btu/SCF.
- Maximum fuel gas pressure drop across burner is 4 in. W.G.
- Fuel gas supply pressure is 1.0 psig.
- Use of Fisher Series B valve is assumed.

Therefore:
- Supply pressure $P_1 = 12.31$ psia.
- Pressure drop $P_2 = 0.856$ psi.
- Specific gravity $G = 0.6$.
- Temperature $T = 560°R$.
- Flowrate $Q = 1563$ SCFH.
- Ratio of gas to liquid sizing coefficients $C_1 = 35.1$ (from Fisher catalog 10 for Micro-Form trim).
- Calculated gas sizing coefficient:

$$C_{gc} = \frac{Q}{\left(\frac{520}{GT}\right)^{1/2} P_1 \sin\left[\frac{3417}{C_1}\left(\frac{P_2}{P_1}\right)^{1/2}\right]} = 236 \ .$$

- Actual gas sizing coefficient $C_{gs} = 170$ for 0.75-in. trim and 260 for 1.0-in. trim. Select 1.0-in. trim.

Sizing calculations for the tempering steam valve are these.

Known:
- Maximum steam flow required is 200 lb/h.
- Maximum pressure drop across steam nozzle is 20 psig.
- Steam is saturated and dry.
- Steam supply pressure is 100 psig.
- Use of Fisher Series B valve is assumed.

Therefore:
- Supply pressure $P_1 = 111.31$ psia.
- Pressure drop $P_2 = 80$ psi.
- Flowrate $Q = 200$ lb/h.
- Superheat $T_{sh} = 0°F$ (saturated).

- Ratio of gas to liquid sizing coefficient $C_1 = 32.3$ (from Fisher catalog 10 for Micro-Flute trim).
- Calculated steam sizing coefficient:

$$C_{sc} = \frac{Q}{\dfrac{P_1}{1 + 0.00065\ T_{sh}} \sin\left[\dfrac{3417}{C_1}\left(\dfrac{P_2}{P_1}\right)^{1/2}\right]} = 1.80\ .$$

- Actual steam sizing coefficient $C_{sa} = 1.6$ for 0.25-in. trim and 2.70 for 0.375-in. trim. Specify 0.375-in. trim.

Sizing calculations for the venturi scrubber solution valve are these.

Known:
- Required pressure at nozzle is 80 psig.
- Flowrate of solution is 13.2 gal/min.
- Specific gravity G is 1.05.
- Solution supply pressure is 85 psig.
- Use of Fisher Series BF valve is assumed.

Therefore:
- Supply pressure $P_1 = 96.31$ psia.
- Pressure drop $P_2 = 5$ psi.
- Calculated liquid sizing coefficient:

$$C_{vc} = \frac{Q}{\left(\dfrac{P_2}{G}\right)^{1/2}} = 6.1\ .$$

- Actual liquid sizing coefficient $C_{va} = 6.04$ for 0.5-in. trim and 10.2 for 0.75-in. trim. Specify 0.75-in. trim.

7.2.4. Equipment Cost. Because of the widely fluctuating market and the experimental nature of the project, Los Alamos prefers not to make an itemized list of the instrumentation cost but to give the total overall equipment costs.

The total cost of process instrumentation was $175,000 in 1975. This figure includes the cost of instruments and controls used throughout the process.

7.3. Offgas Cleanup

Operating temperatures in the offgas cleanup train (see Sec. 4) are monitored at the outlets from the quench tower, venturi, absorber tower, and HEPA filters. Instrumentation controls temperature at the outlets from the condenser/demister and reheater as well as the pressure drop across the venturi.

7.3.1. Drawings.

103Y-223007 D1 through D7	Filter Control Rack #1, Wiring Diagram
103Y-223008 D1 through D5	Filter Control Rack #2, Wiring Diagram
103Y-223059 D1 through D7	Scrubber Control Rack, Wiring Diagram
103Y-223058 D1 through D4	Piping and Instrument Diagram, Treatment Development Facility Incinerator

7.3.2. Specifications. See Sec. 7.2.2.

7.3.3. Sizing Calculations. See Sec. 7.2.3.

7.3.4. Equipment Costs. See Sec. 7.2.4.

7.4. Scrub-Solution Recycling

The scrub-solution recycling system incorporates level control loops for the quench tower sump, absorber tower sump, condensate sump, and process liquid tank. Flow is controlled and monitored for the venturi solution and absorber tower liquid. Flow is controlled for the scrubber pump seal, condensate pump seal, process liquid pump seal, and weir liquid flow. Flow is monitored for the condensate and process liquid blowdown. Pressure drop is indicated across the scrubber liquid filters and process liquid filters, while pressure is monitored for the process liquid. Specific gravity of the recycled solution is both monitored and controlled. A pH control loop is incorporated for the process liquid, and the pH of the condensate and scrubber is monitored.

7.4.1. Drawings.

103Y-223059 D1 through D7	Scrubber Control Rack Wiring Diagram
103Y-223058 D1 through D4	Piping and Instrument Diagram, Treatment Development Facility Incinerator

7.4.2. Specifications. See Sec. 7.2.2.

7.4.3. Sizing Calculations. See Sec. 7.2.3.

7.4.4. Equipment Costs. See Sec. 7.2.4.

7.5. Ash Removal and Packaging

Ash removal and subsequent packaging of the ash requires action that is sequential but is not centrally controlled. Each station is operated on a need basis.

7.5.1. Drawings. Not applicable.

7.5.2. Specifications. Not applicable.

7.5.3. Sizing Calculations. Not applicable.

7.5.4. Equipment Costs. Not applicable.

TABLE 7-1. Panel and Field Mounted Incinerator Controls

Item Number	Manufacturer	Description
1	Allen Bradley	Switch, 2 position wing lever, #800T-H17B
2	Allen Bradley	Pilot lamp, push to test, #800T-QT10, series B
3	Hubble	Plug strip, #5326, 6 outlet, with light switch and fuse
4	Drake	Pilot lamp assembly, #101N-022, 22-kΩ internal resistor, NE-51H neon bulb
5	Bussman	Fuse holder, indicating lamp, #HKL built-in 220-kΩ resistor
6	Standard Wire and Cable	Wire, twisted pair, #18 AWG, black and white, PVC cover
7	Allen Bradley	Control relay, #700N-400-A1
8	Allen Bradley	Control timing relay, #700N-400-A1 with #700NT timing deck
9	Standard Wire and Cable	Wire, #18 AWG, stranded, PVC coated, 600-V service, black
10	Standard Wire and Cable	Same as 9, except white for neutral
11	Standard Wire and Cable	Same as 9, except AWG 16
12	Standard Wire and Cable	Same as 9, except white for neutral
13	Belden	Signal cable, #18 AWG, twisted pair with drain wire, PVC over PVC
14	Belden	Signal cable, #8446, 4 cond. #20 AWG plus 2 cond. #18
15	Honeywell	Thermocouple wire, type RS, with drain wire
16	Gay Engineering	Thermocouple assembly, #E-10-36, 18-in. lead, type R platinum/platinum 13% rhodium
17	Gay Engineering	Thermocouple assembly, #E-10-36, 18-in. lead, type K chromel/alumel
18	Honeywell	Thermocouple wire, type K with drain wire
19	Square "D"	Switch, pushbutton type TRI, class 9001 with type TF DPDT contact block
20	C & K	Switch, push button, #P8221-3E, red, DPDT, momentary
21	Los Alamos stock	Switch, toggle, DPDT, 3 A
22	Microswitch	Switch, interlock, #DT-2RV23A7
23	Microswitch	Switch, limit, #EX-AR
24	Microswitch	Switch, limit, #EX-Q
25	Square "D"	Switch, manual starter, #MBG-2, size M-O
26	General Electric	Switch, rotary limit, #CR115E, 20:1 gear ratio, 3 switches
27	Universal Filters	Switch, flow, #FM-5-CPVC-LP-3EE-3EE-32SSU-6-F3-Flow Up
28	Universal Filters	Switch, flow, #FM-20-CPVC-LP-3EE-3EE-32SSU-8-F3-Flow Up
29	Whitman General	Switch, pressure, #P105, SN-CB300-4, DP125-3N-K3L, 1 to 30 psi

TABLE 7-1. (cont)

Item Number	Manufacturer	Description
30	Whitman General	Switch, pressure, #P105, SN-CB300-4, DP125G-10N-K3L, 100 psi
31	Whitman General	Switch, pressure, #P105, SN-CB300-4, DP125G-25N-K3L, 250 psi
32	Ashcroft	Switch, pressure, #B420B, 30 psi
33	Dwyer	Switch and gage, pressure, #3000 photohelic, 0 to 40 in. W.G.
34	Dwyer	Same as 33 except 0 to 6 in. W.G.
35	Dwyer	Same as 33 except 0 to 10 in. W.G.
36	Dwyer	Same as 33 except 0 to 15 in. W.G.
37	Hart-Hegeman	Switch, toggle, #380638D, DPDT, on-off-on
38	LFE Corp.	Switch, pyrometer, #603-X, 0 to 300°F
39	LFE Corp.	Switch, pyrometer, 0 to 2500°F, high and low set points
40	Square "D"	Switch, selector, #9001, 2 position, type TS1, with contact block, type TF
41	Microswitch	Switch, push-pull button, #PTY2101, red mushroom head
42	Fisher-Porter	Switch, flow,#10A2235, 1 gal/min with #55AR alarm
43	Orange Research	Switch, differential pressure, #1503DGS, 1 to 4.5, 0 to 25 psid
44	Honeywell	Switch, differential pressure, #C645C1020-2
45	Mercoid	Switch, differential pressure, #BB-521-3-R-6-S
46	Mercoid	Switch, #DA-31-23
47	Delaval	Switch, level, #24577, stainless steel
48	Struthers-Dunn	Switch, relay contact, #219BBX-P, 24VCD coil
49	McDonnell-Miller	Switch, time delay flow, #FS4-3 with custom paddle, time delay relay by Potter-Brumfield, #CUF 42-70120, 1 to 120 s
50	Square "D"	Switch, 3 position 9001, type TS-3, with contact block type TF
51	Los Alamos stock	Switch, knife, DPDT, 125 Vac
52	Delaval	Switch, level, #LS2050
53	Square "D"	Switch, key, 2 position, #9001 type TS1K3, with type TF contact block
54	Olympic Controls	Relay, #A79954
55	Foxboro	Relay, alarm, #63R-OA, 10 to 50 mA trip point, general purpose style B
56	Foxboro	Relay, alarm, #63R-OB, 10 to 50 mA trip point, general purpose style B
57	Westinghouse	Relay, #BF22F
58	Allied Control	Relay, BOHRO-6A
59	Honeywell	Relay, flame, R7023C-1001-2
60	Agastat	Relay, time delay, #2423AF, 1 to 10 min
61	Agastat	Relay, time delay, #7102AH, 3 to 30 min
62	Artisan	Time delay, #438 USA

TABLE 7-1. (cont)

Item Number	Manufacturer	Description
63	Allen Bradley	Relay, overload, #810-A03A, series A
64	Allen Bradley	Relay, overload, #810-A01A, series A
65	Allen Bradley	Relay, reversible motor contactor, #705-A0D103, series K, size 0
66	Allen Bradley	Relay, motor contactor, #709-A0D103, series K, size 0
67	Los Alamos stock	Cable, coax, RG62A/U
68	Foxboro	CO/CO_2 infrared analyzer sensing rack, Miran II dual system
69	Foxboro	CO/CO_2 infrared analyzer control rack equip., Miran II dual system
70	Belden	Cable, 3 conductor, #20 AWG, PVC jacket
71	Allen Bradley	Relay, overload, #816-BOV4-K, heater N-18
72	Allen Bradley	Same as 71 except N-30
73	Allen Bradley	Same as 71 except N-27
74	Allen Bradley	Same as 71 except N-20
75	Allen Bradley	Same as 71 except N-34
76	Gast	Blower, air sampler, #S100-102-J901, Ram II
77	American Fan	Blower, combustion air, #AF-12, W/#1090 wheel, 3 hp, 3450 rpm
78	American Fan	Same as 77 except 2 hp
79	Baldor Electric	Motor, side ram, #VM3538, 220/440 V, 3 ph, 1/2 hp, 1725 rpm
80	FMC Corp.	Motor, guillotine door, #1-055-521
81	Baldor Electric	Motor, main ram, #VWM 3157, 230/460 V, 3 ph, 2 hp, 1725 rpm
82	Baldor Electric	Blower, vacuum ash, #M33137, 480 Vac, 3 ph, 10 hp, 1725 rpm
83	Warner Electric	Motor, ash cleanout door, #DCA-5
84	ITT General	Valve, hydramotor, #AH2A102A10, valve assembly, #5108501A with 2 auxiliary interlock switches
85	ITT General	Valve, solenoid operated, #K10CA1391B, normally open
86	Automatic Switch	Valve, solenoid operated, #8210
87	Automatic Switch	Valve, solenoid operated, #8320A37
88	Magnetrol	Valve, solenoid operated, #M0129-S43
89	Worcester Controls	Valve, ball, #D-38-RI, 3 in.
90	Skinner Electric	Valve, solenoid operated, #H935DA2150, code FH6, 4 way
91	Versa Valve	Valve, solenoid operated, #VSG3302-14-31, 4 way
92	Zeltex	Power supply, 5 Vdc, 1 A, 5 pin
93	Spencer Turbine	Bearing monitor, #C2003-2
94	General Electric	Transformer, current, #631X27
95	General Electric	Meter, ampere, #250, 0 to 60 scale
96	Los Alamos stock	Meter, current, dc 0 to 50 mAdc
97	Square "D"	Relay, motor contactor, #8501, type HO-40, series C-AS, 4 pole

TABLE 7-1. (cont)

Item Number	Manufacturer	Description
100	Foxboro	Converter, EMF/I, #693AT-OHA-6 style C, 0 to 2500°F input, 10 to 50 mAdc output
101	Foxboro	Converter, EMF/I, M693AT-OHA-6 style C, 0 to 100°F input, 10 to 50 mAdc output
102	Foxboro	Converter, EMF/I, #M693AT-OHA-6 style C, 100 to 200°F input, 10 to 50 mAdc output
103	Foxboro	Converter, E/I, #M66GT-ΩW, input 0 to 10 Vdc, output 10 to 50 mAdc
104	Foxboro	Controller, #M62H-4E-OH, style C, input 10 to 50 mAdc, output 10 to 50 mAdc
105	Foxboro	Controller, #M62H-5E-OH, style C, input 10 to 50 mAdc, output 10 to 50 mAdc
106	Foxboro	Recorder, #M/642OH, model F-0, 10 to 50 mAdc input, 2 channel
107	Foxboro	Recorder, #E20S-H2FB6, 2 channel, 10 to 50 mAdc
108	Brown-Honeywell	Recorder, Roll Chart, #153X, range 0 to 300°F
109	Sparling-Envirotech	Recorder, Roll Chart, #740, 1 channel
110	Foxboro	Controller, #M62H-4E-0J, style C, 4 to 20 mAdc input and output
111	Foxboro	Controller, #M62HZ-4ED-0H, style C, 10 to 50 mAdc input and output
113	Foxboro	Converter, current to air, #69TA-1, style C, 10 to 50 mAdc input, 3 to 15 psi output
114	Foxboro	Converter, current to air, #69TA-1, style C, 4 to 20 mAdc input, 3 to 15 psi output
115	Foxboro	Converter, current to air, #E69F-TH2, 10 to 50 mAdc input, 3 to 15 psi output
116	Foxboro	Transmitter, pressure, #E13DL, style D, 10 to 50 mAdc output
117	Foxboro	Transmitter, pressure, #E45P-ffNH-DE-AZ-ST.A, 10 to 50 mAdc output, 0 to 150 in. W.G.
118	Foxboro	Transmitter, pressure, #E11GM, 0 to 150 psig, 10 to 50 mAdc output
119	Foxboro	Controller, programmable setpoint, #4056, 4281-TO2-T11/ST1-2-3, 0 to 10 Vdc output, 24 h
120	Foxboro	Power supply, #N0140AB, 12 unit, 75 Vdc
121	Foxboro	Power distribution unit, #N0140MA, 10 unit
122	Honeywell	Detector, flame, ultraviolet, #C7027
123	Honeywell	Control, flame safeguard, #R4140L-1147-2
124	Honeywell	Detector, flame, ultraviolet, #C7012E
125	Fisher	Annunciator, #AL402, 16 channel
126	Faraday	Horn, electric, #5411SF
127	Brooks	Totalizer, #5540-Bia5A1A1/4, 10 to 50 mAdc input
128	Thermox	Oxygen/combustibles, sensor cell, #WDG III

TABLE 7-1. (cont)

Item Number	Manufacturer	Description
129	Thermox	Oxygen/combustibles, control unit, #WDG III, 10 to 50 mAdc output, range 20% O_2 to 10% combustibles
130	Thermox	Oxygen/combustibles, "Bio-bak" memory unit, #20-5938-335
131	North American	Transformer, ignition, high-voltage spark
132	Foxboro	Repeater, current, #66BT, 10 to 50 mAdc input and output
133	Dynatrol	Transmitter, density, #CL-10-HY, range 1.00 to 1.50 S.G.
134	Dynatrol	Converter, density, #EC-213-GA-10, 10 to 50 mAdc output
135	Chromalox	Controller, power thyristor, #4CSCR-015-3480-60, series 3, 15 kW, 480 Vac, 3 ph, without solid state temp. control
136	Foxboro	Transmitter, pH/I converter, #699FN-2H, style A, 10 to 50 mAdc output, 0 to 14 pH scale; pH electrode #Q0104AP-22 in holder #Q0104CA, model 85C-4, ultrasonic cleaner #A204OUS
137	Wallace and Tiernan	Transmitter, flow gauge, #NUXA-968, 2-in. varea-meter
138	Wallace and Tiernan	Demodulator, electronic, #UXA-24090
139	Brooks	Transmitter, flow, #5523H, 10 to 50 mAdc output
140	Brooks	Power supply, #S641-Z-022-AA-A 100 mAdc, 43 Vdc output
141	Controlotron	Flowmeter, #240
142	Controlotron	Flow sensor, #240N
143	Sparling-Envirotech	Totalizer, electronic, #798, 6 digit, 0 to 20 pps input
144	Sparling-Envirotech	Transmitter, flow, #FT500-041-010-0A, 0 to 20 pps output, sensor #1106SC
145	Datametrics	Control bin, #770-2D, digital monitor and power supply, for 12 anemometer modules
146	Datametrics	Anemometer, module, #770-6L, 0 to 10 Vdc output
147	Datametrics	Probe, mass flow, #9038
148	Datametrics	Transducer, mass flow, #1000-2F, 0.6 to 60 SCFM
149	Datametrics	Transducer, mass flow, #1000-4F, 2.5 to 250 SCFM
150	Datametrics	Transducer, mass flow, #1000-6F, 10 to 1000 SCFM
151	Los Alamos stock	Transducer, mass flow, 22-2240 SCFM
152	General Electric	Indicator, pressure, #50-180, 10 to 50 mAdc
153	Mine Safety Appliances	Alarm, combustible gas, #1-501-F460171-2
154	Dynatrol	Detector, level, #CL-10-DJ, with automation products, control unit #EC-501A
155	National Controls	Control, program, dust collector, DNC-T1366-010
156	Goyen Controls	Valve assembly, solenoid operated, #RCA6V383, 8 valves

TABLE 7-1. (cont)

Item Number	Manufacturer	Description
157	Reliance Electric	Control unit, #NO11C54S, variable speed drive, 3/4 hp
158	Reliance Electric	Motor, power matched/rpm, rectified power, #56G3200M-PC, 1725 rpm, 3/4 hp
159	Eriez Manufacturing	Control vibrator, model FT, style 26
160	Eriez Manufacturing	Vibrator, H1-V1, model 40-S, style 26
161	Air Technical Industries	Table hydraulic, foot operated
162	Process Equipment	Agitator, PGS-4A
163	General Electric	Switch, manual starter, #CR101Y1, heater #H103B
164	Dayton Electric/Teel	Pump, rotary screw, #3P569A, 1/2 hp, 1725 rpm
165	S & G Enterprises	Compactor, #5A ram flat
166	Briscoe	Control, heater, #CTL350, 150 to 550°F
167	Briscoe	Heater, tape, #CTL-A, 0.9 in. × 50 ft, rubber, 10 W/ft
168	Briscoe	Heater, pad
169	General Electric	Transformer, control, #9T51Y4, 480/220 primary, 220/110 secondary

TABLE 7-2. Elements Listed in Piping and Instrument Diagram

Element Number	Manufacturer	Description
AAH-16	Fisher	Alarm, high combustibles, Item 125, Table 7-1
AAH-44	Fisher	Alarm, high pH, Item 125, Table 7-1
AAH-46	Fisher	Alarm, high specific gravity, Item 125, Table 7-1
AAL-18	Fisher	Alarm, low oxygen, Item 125, Table 7-1
AAL-42	Fisher	Alarm, low pH, Item 125, Table 7-1
AAL-44	Fisher	Alarm, low pH, Item 125, Table 7-1
AE-16	Thermox	Element, oxygen/combustibles, Item 128, Table 7-1
AE-18	Thermox	Element, oxygen/combustibles, Item 128, Table 7-1
AE-38	Foxboro	Element, pH, Item 136, Table 7-1
AE-42	Foxboro	Element, pH, Item 136, Table 7-1
AE-44	Foxboro	Element, pH, Item 136, Table 7-1
AE-46	Dynatrol	Element, specific gravity, Item 133, Table 7-1
AE-50	Foxboro	Element, conductivity, Model 697, 0-200 μs per cm, cell factor 0.1/cm, probe #8854
AIC-16	Foxboro	Indicator-controller, oxygen/combustibles, Item 104, Table 7-1
AIC-18	Foxboro	Indicator-controller, oxygen/combustibles, Item 104, Table 7-1
AIC-44	Foxboro	Indicator-controller, pH, Item 104, Table 7-1
AIC-46	Foxboro	Indicator-controller, specific gravity, Item 104, Table 7-1
AIT-16	Thermox	Indicator-transmitter, oxygen/combustibles, Items 129, 130, Table 7-1
AIT-18	Thermox	Indicator-transmitter, oxygen/combustibles, Items 129, 130, Table 7-1
AIT-38	Foxboro	Indicator-transmitter, pH, Item 136, Table 7-1
AIT-42	Foxboro	Indicator-transmitter, pH, Item 136, Table 7-1
AIT-44	Foxboro	Indicator-transmitter, pH, Item 136, Table 7-1
AIT-50	Foxboro	Indicator-transmitter, conductivity, Item AE-50 above
AR-16	Foxboro	Recorder, oxygen/combustibles, Item 106, Table 7-1
AR-18	Foxboro	Recorder, oxygen/combustibles, common with AR-16 above
AR-38	Foxboro	Recorder, pH, Item 106, Table 7-1
AR-42	Foxboro	Recorder, pH, Item 106, Table 7-1
AR-44	Foxboro	Recorder, pH, common with AR-38 above
AR-46	Foxboro	Recorder, specific gravity, Item 106, Table 7-1
ASH-16	Foxboro	Switch, high combustibles, Item 55, Table 7-1
ASH-44	Foxboro	Switch, high pH, Item 56, Table 7-1
ASH-46	Foxboro	Switch, high specific gravity, Item 55, Table 7-1
ASH-50	Foxboro	Switch, high conductivity, Item AE-50 above
ASL-18	Foxboro	Switch, low oxygen, Item 55, Table 7-1

TABLE 7-2. (cont)

Element Number	Manufacturer	Description
ASL-42	Foxboro	Switch, low pH, Item 55, Table 7-1
ASL-44	Foxboro	Switch, low pH, Item 55, Table 7-1
AT-46	Dynatrol	Transmitter, specific gravity, Item 134, Table 7-1
AV-16	Fisher	Valve, oxygen/combustibles control, #7810, size 3, cast-iron butterfly with fishtail disk, #656, size 30 operator, #FS3502-1 positioner
AV-18	Fisher	Valve, oxygen/combustibles control, #7810, size 6, cast-iron butterfly with fishtail disk, #656, size 40 operator, #FS3582-1 positioner
AV-44	Fisher	Valve, pH control, #B, size 1/2, 316 SS, #513R operator, #FS3502-1 positioner
AV-50	Fisher	Valve, conductivity control, #B, size 1, 316SS, size 3/4 Micro-Form trim, #513R operator
AY-16	Foxboro	Transducer, current to pneumatic, Item 113, Table 7-1
AY-18	Foxboro	Transducer, current to pneumatic, Item 113, Table 7-1
AY-44	Foxboro	Transducer, current to pneumatic, Item 113, Table 7-1
AY-46	Foxboro	Transducer, current to pneumatic, Item 113, Table 7-1
BAL-23	Fisher	Alarm, low-flame ultraviolet, Item 125, Table 7-1
BAL-24	Fisher	Alarm, low-flame ultraviolet, Item 125, Table 7-1
BE-23	Honeywell	Element, flame ultraviolet, Item 124, Table 7-1
BE-24	Honeywell	Element, flame ultraviolet, Item 124, Table 7-1
BI-23	Honeywell	Indicator, flame ultraviolet, #W136A, panel mounted
BI-24	Honeywell	Indicator, flame ultraviolet, #W136A, panel mounted
BSL-23	Honeywell	Switch, low-flame ultraviolet, Item 123, Table 7-1
BSL-24	Honeywell	Switch, low-flame ultraviolet, Item 123, Table 7-1
FAH-32 A, B, C, D	Fisher	Alarm, high flow, Item 125, Table 7-1
FAL-27 A, B, D	Fisher-Porter	Alarm, low flow, Item 42, Table 7-1
FAL-32 A, B, C, D	Fisher	Alarm, low flow, Item 125, Table 7-1
FAL-33	Foxboro	Alarm, low flow, Item 56, Table 7-1
FAL-34	Foxboro	Alarm, low flow, Item 55, Table 7-1
FC-27 A, B, D	Plast-O-Matic	Controller, flow, #FC050V-1.5
FC-32A	Plast-O-Matic	Controller, flow, #FC100V-9
FC-32 B, C, D	Plast-O-Matic	Controller, flow, #FC100V-5
FC-38	Plast-O-Matic	Controller, flow, #FC075V-5
FC-40	Plast-O-Matic	Controller, flow, #FC075V-5
FC-42	Plast-O-Matic	Controller, flow, #FC075V-5
FE-6 A, B	Datametrics	Element, flow, Item 147, Table 7-1
FE-7 A, B	Datametrics	Element, flow, Item 147, Table 7-1
FE-15	Datametrics	Element, flow, Item 147, Table 7-1

TABLE 7-2. (cont)

Element Number	Manufacturer	Description
FE-17	Datametrics	Element, flow, Item 147, Table 7-1
FE-56	Los Alamos stock	Element, flow, Item 151, Table 7-1
FE-60	Controlotron	Element, flow, Item 142, Table 7-1
FFC-6	Foxboro	Controller, flow ratio, Item 111, Table 7-1
FFC-7	Foxboro	Controller, flow ratio, Item 111, Table 7-1
FIC-33	Foxboro	Indicator-controller, flow, Item 104, Table 7-1
FIC-34	Foxboro	Indicator-controller, flow, Item 104, Table 7-1
FISHL-32 A	Universal Filters	Indicator-switch, high/low flow, Item 28, Table 7-1
FISHL-32 B, C, D	Universal Filters	Indicator-switch, high/low flow, Item 27, Table 7-1
FISL-27 A, B, D	Fisher-Porter	Indicator-switch, low flow, Item 42, Table 7-1
FIT-6 A	Datametrics	Indicator-transmitter, flow, Item 148, Table 7-1
FIT-6 B	Datametrics	Indicator-transmitter, flow, Item 149, Table 7-1
FIT-7 A	Datametrics	Indicator-transmitter, flow, Item 148, Table 7-1
FIT-7 B	Datametrics	Indicator-transmitter, flow, Item 149, Table 7-1
FIT-15	Datametrics	Indicator-transmitter, flow, Item 149, Table 7-1
FIT-17	Datametrics	Indicator-transmitter, flow, Item 150, Table 7-1
FIT-19	Brooks	Indicator-transmitter, flow, Items 139, 140, Table 7-1
FIT-32	Brooks	Indicator-transmitter, flow, Items 139, 140, Table 7-1
FIT-33	Brooks	Indicator-transmitter, flow, Items 139, 140, Table 7-1
FIT-34	Brooks	Indicator-transmitter, flow, Items 139, 140, Table 7-1
FIT-40	Brooks	Indicator-transmitter, flow, Items 139, 140, Table 7-1
FIT-52 A, B	Wallace & Tiernan	Indicator-transmitter, flow, Items 137, 138, Table 7-1
FIT-56	Los Alamos stock	Indicator-transmitter, flow, Item 151, Table 7-1
FIT-60	Controlotron	Indicator-transmitter, flow, Item 141, Table 7-1
FQ-6 A, B	Brooks	Totalizer, flow, Item 127, Table 7-1
FQ-7 A, B	Brooks	Totalizer, flow, Item 127, Table 7-1
FQ-15	Brooks	Totalizer, flow, Item 127, Table 7-1
FQ-17	Brooks	Totalizer, flow, Item 127, Table 7-1
FQ-19	Brooks	Totalizer, flow, Item 127, Table 7-1
FQ-27 A, B	Rockwell	Totalizer, flow, #SR, size 1 in.
FQ-40	Brooks	Totalizer, flow, Item 127, Table 7-1
FQ-56	Brooks	Totalizer, flow, Item 127, Table 7-1
FR-6 A	Foxboro	Recorder, flow, Item 106, Table 7-1
FR-6 B	Foxboro	Recorder, flow, Item 106, Table 7-1
FR-7 A	Foxboro	Recorder, flow, common with FR-6 A above
FR-7 B	Foxboro	Recorder, flow, common with FR-6 B above
FR-15	Foxboro	Recorder, flow, Item 106, Table 7-1

TABLE 7-2. (cont)

Element Number	Manufacturer	Description
FR-17	Foxboro	Recorder, flow, Item 106, Table 7-1
FR-19	Foxboro	Recorder, flow, Item 106, Table 7-1
FR-32	Foxboro	Recorder, flow, Item 106, Table 7-1
FR-33	Foxboro	Recorder, flow, Item 106, Table 7-1
FR-34	Foxboro	Recorder, flow, common with FR-33 above
FR-40	Foxboro	Recorder, flow, Item 106, Table 7-1
FR-52 A	Foxboro	Recorder, flow, Item 106, Table 7-1
FR-52 B	Foxboro	Recorder, flow, common with FR-19 above
FR-56	Foxboro	Recorder, flow, common with FR-17 above
FR-60	Foxboro	Recorder, flow, common with FR-40 above
FSL-33	Foxboro	Switch, low flow, Item 56, Table 7-1
FSL-34	Foxboro	Switch, low flow, Item 55, Table 7-1
FSL-57 A, B	McDonnell-Miller	Switch, low flow, Item 49, Table 7-1
FV-6	Fisher	Valve, flow control, #7810, size 3, cast-iron butterfly with fishtail disk, #656, size 30 operator, #FS3582-1 positioner
FV-7	Fisher	Valve, flow control, Item FV-6 above
FV-33	Fisher	Valve, flow control, #B, size 1 1/2, Hastelloy C-276, #513R operator
FV-34	Fisher	Valve, flow control, #B, size 1, Hastelloy C-276, #513R operator
FY-6	Foxboro	Transducer, current to pneumatic, Item 113, Table 7-1
FY-6 A, B,	Foxboro	Transducer, voltage to current, Item 103, Table 7-1
FY-7	Foxboro	Transducer, current to pneumatic, Item 113, Table 7-1
FY-7 A, B	Foxboro	Transducer, voltage to current, Item 103, Table 7-1
FY-15	Foxboro	Transducer, voltage to current, Item 103, Table 7-1
FY-17	Foxboro	Transducer, voltage to current, Item 103, Table 7-1
FY-33	Foxboro	Transducer, current to pneumatic, Item 113, Table 7-1
FY-34	Foxboro	Transducer, current to pneumatic, Item 113, Table 7-1
FY-56	Foxboro	Transducer, voltage to current, Item 103, Table 7-1
HV-2 A, B	Los Alamos stock	Valve, hand operated, brass gas cock, size 1 1/2
HV-3 A, B	Los Alamos stock	Valve, hand operated, brass gas cock, size 1 1/2
HV-4	Los Alamos stock	Valve, hand operated, brass gas cock, size 1/2
HV-5	Los Alamos stock	Valve, hand operated, brass gas cock, size 1/2
HV-13	North American	Valve, hand operated, #1822-0, size 3/4
HV-14	North American	Valve, hand operated, Item HV-13 above

TABLE 7-2. (cont)

Element Number	Manufacturer	Description
HV-17 A, B	Worcester Controls	Valve, hand operated, #1/2-5916TSE
HV-17 C	Los Alamos stock	Valve, hand operated, #2-316SS butterfly
HV-19 A, B, C	Hancock	Valve, hand operated, #9505-3, size 3/4
HV-19 D, E	Worcester Controls	Valve, hand operated, #1-5966TSE
HV-19 F, G, H, I	Hancock	Valve, hand operated, Item HV-19 A above
HV-27 A	Worcester Controls	Valve, hand operated, #1-5916TSE
HV-27 B, C, D, E, F, G	Hammond	Valve, hand operated, #690, size 1
HV-27 H	Worcester Controls	Valve, hand operated, Item HV-19 D above
HV-27 I	Worcester Controls	Valve, hand operated, Item HV-27 A above
HV-27 K, L, M	Hammond	Valve, hand operated, Item HV-27 B above
HV-28	Worcester Controls	Valve, hand operated, #3/4-5916TSE
HV-30 D	Worcester Controls	Valve, hand operated, #1-D466TSEV1
HV-31 A, B	Asahi	Valve, hand operated, #AV-CPVC-Teflon, flanged, size 2
HV-32 A, B, C, D	Asahi	Valve, hand operated, #AV-CPVC-Teflon, flanged, size 1
HV-33 A, B, C	Asahi	Valve, hand operated, #AV-CPVC-Teflon, flanged, size 1 1/2
HV-34 A, B, C	Asahi	Valve, hand operated, Item HV-32 A above
HV-36	Asahi	Valve, hand operated, Item HV-31 A above
HV-38 A	Asahi	Valve, hand operated, Item HV-32 A above
HV-38 B, C, D, E	Asahi	Valve, hand operated, Item HV-31 A above
HV-38 F, G,	Asahi	Valve, hand operated, #AV-73-CPVC, size 1
HV-38 H, I, J	Asahi	Valve, hand operated, Item HV-31 A above
HV-38 K, L	Asahi	Valve, hand operated, #AV-73-CPVC, size 1/2
HV-40 A	Asahi	Valve, hand operated, Item HV-38 F above
HV-40 B, C	Asahi	Valve, hand operated, Item HV-31 A above
HV-40 D, E	Asahi	Valve, hand operated, Item HV-38 F above
HV-40 F	Asahi	Valve, hand operated, Item HV-31 A above
HV-40 G, H	Asahi	Valve, hand operated, Item HV-38 K above
HV-40 I, J, K	Asahi	Valve, hand operated, Item HV-32 A above
HV-40 L, M	Asahi	Valve, hand operated, Item HV-38 K above
HV-42 A	Asahi	Valve, hand operated, Item HV-38 F above
HV-42 B	Hills-McCanna	Valve, hand operated, #J5, size 1
HV-42 C, D, E	Powell	Valve, hand operated, #500, size 2
HV-48 A, B, C, D	Centerline	Valve, hand operated, cast-iron, size 6
HV-50 A, B, C	Hammond	Valve, hand operated, Item HV-27 B above
HV-51 A, B	Powell	Valve, hand operated, Item HV-42 C above
HV-52 A, B, C	Powell	Valve, hand operated, #500, size 1 1/2
HV-52 D, E, F, G H, I, J, K, L, M	Powell	Valve, hand operated, Item HV-42 C above
HV-56 A, B	Fisher	Valve, hand operated, #9550, size 10
LAH-35	Fisher	Alarm, high level, Item 125, Table 7-1
LAH-36	Fisher	Alarm, high level, Item 125, Table 7-1

TABLE 7-2. Elements Listed in Piping and Instrument Diagram

Element Number	Manufacturer	Description
LAH-45	Fisher	Alarm, high level, Item 125, Table 7-1
LAH-47	Fisher	Alarm, high level, Item 125, Table 7-1
LAL-35	Fisher	Alarm, low level, Item 125, Table 7-1
LAL-36	Fisher	Alarm, low level, Item 125, Table 7-1
LAL-43	Fisher	Alarm, low level, Item 125, Table 7-1
LAL-45	Fisher	Alarm, low level, Item 125, Table 7-1
LAL-47	Fisher	Alarm, low level, Item 125, Table 7-1
LAV-46	Fisher	Valve, level and specific gravity control, #BF, size 1, Hastelloy C-276, #513R operator, #FS3582-1 positioner
LC-27	Cla-Val	Controller, level, #124, size 3/4
LC-35	Fisher	Controller, level, #2516
LC-36	Fisher	Controller, level, Item LC-35 above
LC-45	Fisher	Controller, level, Item LC-35 above
LC-47	Fisher	Controller, level, Item LC-35 above
LI-35	Foxboro	Indicator, level, #MR 90
LI-36	Foxboro	Indicator, level, Item LI-35 above
LI-45	Foxboro	Indicator, level #5002-V
LI-47	Foxboro	Indicator, level, Item LI-35 above
LSH-35	Whitman General	Switch, high level, Item 29, Table 7-1
LSH-36	Whitman General	Switch, high level, Item 29, Table 7-1
LSH-45	Whitman General	Switch, high level, Item 29, Table 7-1
LSH-47	Whitman General	Switch, high level, Item 29, Table 7-1
LSL-35	Whitman General	Switch, low level, Item 29, Table 7-1
LSL-36	Whitman General	Switch, low level, Item 29, Table 7-1
LSL-43	Delaval	Switch, low level, Item 47, Table 7-1
LSL-45	Whitman General	Switch, low level, Item 29, Table 7-1
LSL-47	Whitman General	Switch, low level, Item 29, Table 7-1
LT-35	Foxboro	Transmitter, level, #130MP-MCAK31A-R
LT-36	Foxboro	Transmitter, level, Item LT-35 above
LT-45	Foxboro	Transmitter, level, Item LT-35 above
LT-47	Foxboro	Transmitter, level, Item LT-35 above
LV-35	Red Valve	Valve, level control, #A, aluminum body, size 2 × 1 1/2, Hypalon reduced-valve port
LV-36	Fisher	Valve, level control, #BF, size 1 1/2, Hastelloy C-276, 1-linear trim, #513 operator, #FS3582-1 positioner
LV-45	Fisher	Valve, level control, #BF, size 1, 316SS, 3/8 Micro-Form trim, #513R operator, #FS3582-1 positioner
LV-47	Fisher	Valve, level control, #BF, size 1, steel, 3/4-linear trim, #513R operator, #FS3582-1 positioner
PAH-20	Fisher	Alarm, high pressure, Item 125, Table 7-1
PAHL-2	Fisher	Alarm, high/low pressure, Item 125, Table 7-1
PAHL-3	Fisher	Alarm, high/low pressure, Item 125, Table 7-1

TABLE 7-2. (cont)

Element Number	Manufacturer	Description
PAL-10	Fisher	Alarm, low pressure, Item 125, Table 7-1
PAL-17	Fisher	Alarm, low pressure, Item 125, Table 7-1
PAL-19	Fisher	Alarm, low pressure, Item 125, Table 7-1
PAL-20	Fisher	Alarm, low pressure, Item 125, Table 7-1
PAL-27	Fisher	Alarm, low pressure, Item 125, Table 7-1
PAL-28	Fisher	Alarm, low pressure, Item 125, Table 7-1
PAL-30	Fisher	Alarm, low pressure, Item 125, Table 7-1
PAL-31	Fisher	Alarm, low pressure, Item 125, Table 7-1
PAL-38	Fisher	Alarm, low pressure, Item 125, Table 7-1
PAL-42	Fisher	Alarm, low pressure, Item 125, Table 7-1
PAL-49	Fisher	Alarm, low pressure, Item 125, Table 7-1
PAL-51	Fisher	Alarm, low pressure, Item 125, Table 7-1
PALL-31	Fisher	Alarm, low-low pressure, Item 125, Table 7-1
PCV-1	Fisher	Valve, pressure control, #S201, size 1 1/2
PCV-4	North American	Valve, pressure control, #7348-01
PCV-5	North American	Valve, pressure control, Item PCV-4 above
PCV-19	Leslie	Valve, pressure control, #LY-DC, size 3/4
PCV-51	Fisher	Valve, pressure control, #67FR with handwheel
PDAH-25 A, B	Fisher	Alarm, high differential pressure, Item 125, Table 7-1
PDAH-38	Fisher	Alarm, high differential pressure, Item 125, Table 7-1
PDAH-40	Fisher	Alarm, high differential pressure, Item 125, Table 7-1
PDAL-25 A, B	Fisher	Alarm, low differential pressure, Item 125, Table 7-1
PDAL-38 B	Fisher	Alarm, low differential pressure, Item 125, Table 7-1
PDC-37	Foxboro	Controller differential pressure, Item 104, Table 7-1
PDI-11	Dwyer	Indicator, differential pressure, #2010
PDI-12	Dwyer	Indicator, differential pressure, Item PDI-11 above
PDI-13	Dwyer	Indicator, differential pressure, Item PDI-11 above
PDI-14	Dwyer	Indicator, differential pressure, Item PDI-11 above
PDI-25 A	Dwyer	Indicator, differential pressure, #2004
PDI-25 B, C	Dwyer	Indicator, differential pressure, #2002
PDI-25 D	Dwyer	Indicator, differential pressure, #2100
PDI-25 E	Dwyer	Indicator, differential pressure, Item PDI-11 above
PDI-25 F	Dwyer	Indicator, differential pressure, #2001
PDI-25 G	Dwyer	Indicator, differential pressure, Item PDI-25 B above

TABLE 7-2. (cont)

Element Number	Manufacturer	Description
PDI-25 H	Dwyer	Indicator, differential pressure, Item PDI-25 A
PDISH-2	Dwyer	Indicator-switch, high differential pressure, Item 34, Table 7-1
PDISH 3	Dwyer	Indicator-switch, high differential pressure, Item 34, Table 7-1
PDISH-25 A, B	Dwyer	Indicator-switch, high differential pressure, Item 34, Table 7-1
PDISH-38	Orange Research	Indicator-switch, high differential pressure, #1503DGS-1-4 1/2-4
PDISH-40	Orange Research	Indicator-switch, high differential pressure, Item PDISH-38 above
PDISL-38 B	Mercoid	Indicator-switch, low differential pressure, #BB521-3R6S
PDR-37	Foxboro	Recorder, differential pressure, Item 106, Table 7-1
PDT-37	Foxboro	Transmitter, differential pressure, Item 116, Table 7-1
PDV-37	Resistoflex	Valve, differential pressure control, TFE control clamp, size 4, #74SN positioner
PDY-37	Foxboro	Transducer, current to pneumatic, Item 113, Table 7-1
PI-4	Dwyer	Indicator, pressure, #2004
PI-5	Dwyer	Indicator, pressure, Item PI-4 above
PI-19 A, B	Ashcroft	Indicator, pressure, #35-1009S-02L, range 0-160
PI-19 C, D	Ashcroft	Indicator, pressure, #35-1009S-02L, range 0-60
PI-19 C, D	Ashcroft	Indicator, pressure, #35-1009S-02L, range 0-15
PI-20	General Electric	Indicator, pressure, Item 152, Table 7-1
PI-25 B	Dwyer	Indicator, pressure, #2080
PI-27	Ashcroft	Indicator, pressure, Item PI-19C above
PI-28	Ashcroft	Indicator, pressure, Item PI-19A above
PI-30	Ashcroft	Indicator, pressure, Item PI-19A above
PI-31 A, B	Ashcroft	Indicator, pressure, #35-1009S-02L, range 0-100
PI-38	Ashcroft	Indicator, pressure, Item PI-31A above
PI-40 B	Ashcroft	Indicator, pressure, Item PI-19A above
PI-42	Ashcroft	Indicator, pressure, Item PI-19C above
PI-43	Ashcroft	Indicator, pressure, Item PI-19C above
PI-49	Ashcroft	Indicator, pressure, Item PI-31A above
PI-51 A	Ashcroft	Indicator, pressure, Item PI-19C above
PI-51 B	Ashcroft	Indicator, pressure, Item PI-31A above
PIC-20	Foxboro	Indicator-controller, pressure, Item 105, Table 7-1
PISL-4	Dwyer	Indicator-switch, low pressure, Item 33, Table 7-1
PISL-5	Dwyer	Indicator-switch, low pressure, Item 33, Table 7-1
PISL-10	Dwyer	Indicator-switch, low pressure, Item 36, Table 7-1
PISL-17	Dwyer	Indicator-switch, low pressure, Item 35, Table 7-1
PR-31	Foxboro	Recorder, pressure, common with PDR-37 above

TABLE 7-2. (cont)

Element Number	Manufacturer	Description
PSH-20	Foxboro	Switch, high pressure, Item 56, Table 7-1
PSL-19	Whitman General	Switch, low pressure, Item 31, Table 7-1
PSL-20	Foxboro	Switch, low pressure, Item 56, Table 7-1
PSL-27	Whitman General	Switch, low pressure, Item 30, Table 7-1
PSL-28	Whitman General	Switch, low pressure, Item 31, Table 7-1
PSL-30	Whitman General	Switch, low pressure, Item 31, Table 7-1
PSL-31	Whitman General	Switch, low pressure, Item 31, Table 7-1
PSL-38	Whitman General	Switch, low pressure, Item 30, Table 7-1
PSL-42	Whitman General	Switch, low pressure, Item 30, Table 7-1
PSL-49	Whitman General	Switch, low pressure, Item 30, Table 7-1
PSL-51	Mercoid	Switch, low pressure, #DA-31-23
PSV-2	Fisher	Valve, pressure relief, #289H, size 2
PSV-3	Fisher	Valve, pressure relief, Item PSV-2 above
PT-20	Foxboro	Transmitter, pressure, Item 116, Table 7-1
PT-31	Foxboro	Transmitter, pressure, Item 118, Table 7-1
PV-20 A, B	Fisher	Valve, pressure control, #9510, cast-iron, size 8, #656, size 60 operator, #FS3582-1 positioner
PY-20	Foxboro	Transducer, current to pneumatic, Item 113, Table 7-1
TAH-8	Fisher	Alarm, high temperature, Item 125, Table 7-1
TAH-9	Fisher	Alarm, high temperature, Item 125, Table 7-1
TAH-39	Fisher	Alarm, high temperature, Item 125, Table 7-1
TAH-53	Fisher	Alarm, high temperature, Item 125, Table 7-1
TAHH-21	Fisher	Alarm, high-high temperature, Item 125, Table 7-1
TAHH-22	Fisher	Alarm, high-high temperature, Item 125, Table 7-1
TAHH-39	Fisher	Alarm, high-high temperature, Item 125, Table 7-1
TAL-8	Fisher	Alarm, low temperature, Item 125, Table 7-1
TAL-9	Fisher	Alarm, low temperature, Item 125, Table 7-1
TALL-21	Fisher	Alarm, low-low temperature, Item 125, Table 7-1
TALL-22	Fisher	Alarm, low-low temperature, Item 125, Table 7-1
TDAL-54	Fisher	Alarm, low temperature differential, Item 125, Table 7-1
TDIC-54	Foxboro	Indicator-controller, temperature differential, Item 110, Table 7-1
TDSL-54	Foxboro	Switch, low temperature differential, Item 55, Table 7-1
TDY-54	Foxboro	Transducer, voltage to current, Item 100, Table 7-1
TE-5	Gay Engineering	Element, temperature, Item 17, Table 7-1
TE-8	Gay Engineering	Element, temperature, Item 16, Table 7-1
TE-9	Gay Engineering	Element, temperature, Item 16, Table 7-1
TE-10	Gay Engineering	Element, temperature, Item 17, Table 7-1

TABLE 7-2. (cont)

Element Number	Manufacturer	Description
TE-21	Gay Engineering	Element, temperature, Item 16, Table 7-1
TE-22	Gay Engineering	Element, temperature, Item 16, Table 7-1
TE-25 F, G, H, I	Gay Engineering	Element, temperature, Item 17, Table 7-1
TE-26 A, B, C, D E, F	Gay Engineering	Element, temperature, Item 17, Table 7-1
TE-31	Gay Engineering	Element, temperature, Item 17, Table 7-1
TE-38	Gay Engineering	Element, temperature, Item 17, Table 7-1
TE-39	Gay Engineering	Element, temperature, Item 17, Table 7-1
TE-48	Gay Engineering	Element, temperature, Item 17, Table 7-1
TE-49	Gay Engineering	Element, temperature, Item 17, Table 7-1
TE-51 A, B	Gay Engineering	Element, temperature, Item 17, Table 7-1
TE-52 A, B	Gay Engineering	Element, temperature, Item 17, Table 7-1
TE-53	Gay Engineering	Element, temperature, Item 17, Table 7-1
TE-54 A, B	Gay Engineering	Element, temperature, Item 17, Table 7-1
TE-55	Gay Engineering	Element, temperature, Item 17, Table 7-1
TE-57 A, B, C, D	Gay Engineering	Element, temperature, Item 17, Table 7-1
TIC-8	Foxboro	Indicator-controller, temperature, Item 104, Table 7-1
TIC-9	Foxboro	Indicator-controller, temperature, Item 104, Table 7-1
TIC-53	Foxboro	Indicator-controller, temperature, Item 110, Table 7-1
TIC-55	Foxboro	Indicator-controller, temperature, Item 110, Table 7-1
TISHH-21	LFE Corp.	Indicator switch, high-high temperature, Item 39, Table 7-1
TISHH-22	LFE Corp.	Indicator switch, high-high temperature, Item 39, Table 7-1
TISHH-39	LFE Corp.	Indicator switch, high-high temperature, Item 38, Table 7-1
TR-5	Brown-Honeywell	Recorder, temperature, Item 108, Table 7-1
TR-8	Foxboro	Recorder, temperature, Item 106, Table 7-1
TR-9	Foxboro	Recorder, temperature, common with TR-8 above
TR-10	Brown-Honeywell	Recorder, temperature, common with TR-5 above
TR-25 F, G, H, I	Brown-Honeywell	Recorder, temperature, Item 108, Table 7-1
TR-26 A, B, C, D	Brown-Honeywell	Recorder, temperature, common with TR-5 above
TR-26 E, F	Brown-Honeywell	Recorder, temperature, Item 108, Table 7-1
TR-31	Brown-Honeywell	Recorder, temperature, common with TR-26 E above
TR-38 A	Brown-Honeywell	Recorder, temperature, common with TR-25 F above
TR-48	Brown-Honeywell	Recorder, temperature, common with TR-25 F above
TR-49	Brown-Honeywell	Recorder, temperature, common with TR-25 F above

TABLE 7-2. (cont)

Element Number	Manufacturer	Description
TR-51 A, B	Brown-Honeywell	Recorder, temperature, common with TR-25 F above
TR-52 A, B	Brown-Honeywell	Recorder, temperature, common with TR-25 F above
TR-53	Brown-Honeywell	Recorder, temperature, common with TR-25F above
TSH-8	Foxboro	Switch, high temperature, Item 56, Table 7-1
TSH-9	Foxboro	Switch, high temperature, Item 56, Table 7-1
TSH-39	LFE Corp.	Switch, high temperature, common with TISHH-39 above
TSH-53	Foxboro	Switch, high temperature, Item 56, Table 7-1
TSH-57 A, B, C, D	Spencer Turbine	Switch, high temperature, Item 93, Table 7-1
TSL-8	Foxboro	Switch, low temperature, Item 56, Table 7-1
TSL-9	Foxboro	Switch, low temperature, Item 56, Table 7-1
TSLL-21	LFE Corp.	Switch, low-low temperature, common with TISHH-21 above
TSLL-22	LFE Corp.	Switch, low-low temperature, common with TISHH-22 above
TV-8 A	Fisher	Valve, temperature control, #B, steel, size 1, #513R operator, #FS-3582-1 positioner
TV-8 B	Fisher	Valve, temperature control, #B, steel, size 3/4, #513R operator, #FS-3512-1 positioner
TV-9	Fisher	Valve, temperature control, Item TV-8 A above
TV-53	Fisher	Valve, temperature control, #BF, steel, size 2, #513R operator
TV-55	Fisher	Valve, temperature control, Item TV-53 above
TY-8 A, B	Foxboro	Transducer, current to pneumatic, Item 113, Table 7-1
TY-8 C	Foxboro	Transducer, voltage to current, Item 100, Table 7-1
TY-9 A	Foxboro	Transducer, current to pneumatic, Item 113, Table 7-1
TY-9 B	Foxboro	Transducer, voltage to current, Item 100, Table 7-1
TY-53 A	Foxboro	Transducer, voltage to current, Item 100, Table 7-1
TY-53 B	Foxboro	Transducer, current to pneumatic, Item 113, Table 7-1
TY-54	Chromalox	Transducer, current to voltage , Item 135, Table 7-1
TY-55 A	Foxboro	Transducer, voltage to current, Item 100, Table 7-1
TY-55 B	Foxboro	Transducer, current to pneumatic, Item 113, Table 7-1
X-19 A	Penn Separator	Separator, steam condensate, #5333 B

TABLE 7-2. Elements Listed in Piping and Instrument Diagram

Element Number	Manufacturer	Description
X-19 C	Yarway	Strainer, wye, #250, size 3/4
X-19 D	Huffman	Trap, condensate, #5014, size 3/4
X-19 E	Yarway	Strainer, wye, Item X-19 C above
X-28	Yarway	Strainer, wye, Item X-19 C above
X-30	Fisher	Shutoff, low level, #38, size 1
X-31 A	Aqua Matic	Strainer, wye, #536F, size 2
X-38 A	Aqua Matic	Strainer, wye, Item X-31 A above
XV-2 A, B	ITT General	Valve, solenoid operated, Item 84, Table 7-1
XV-2 C	ITT General	Valve, solenoid operated, Item 85, Table 7-1
XV-2 D	Check-All Valve	Valve, check, #UN3-150-CV, size 3/4
XV-3 A, B	ITT General	Valve, solenoid operated, Item 84, Table 7-1
XV-3 C	ITT General	Valve, solenoid operated, Item 85, Table 7-1
XV-3 D	Check-All Valve	Valve, check, Item XV-2 D above
XV-4 A, B	Automatic Switch	Valve, solenoid operated, Item 86, Table 7-1
XV-4 C	ITT General	Valve, solenoid operated, Item 85, Table 7-1
XV-5 A, B	Automatic Switch	Valve, solenoid operated, Item 86, Table 7-1
XV-5 C	ITT General	Valve, solenoid operated, Item 85, Table 7-1
XV-6	Automatic Switch	Valve, solenoid operated, Item 87, Table 7-1
XV-7	Automatic Switch	Valve, solenoid operated, Item 87, Table 7-1
XV-8 A, B	Automatic Switch	Valve, solenoid operated, Item 87, Table 7-1
XV-9	Automatic Switch	Valve, solenoid operated, Item 87, Table 7-1
XV-13	Check-All Valve	Valve, check, Item XV-2 D above
XV-14	Check-All Valve	Valve, check, Item XV-2 D above
XV-19 A	Magnetrol	Valve, solenoid operated, hand override, Item 88, Table 7-1
XV-19 B	Powell	Valve, check, #150, size 3/4
XV-27	Automatic Switch	Valve, solenoid operated, Item 86, Table 7-1
XV-27 A	Nupro	Valve, check, #16C2, 316SS, size 1
XV-27 B	Nupro	Valve, check, #12C2, 316SS, size 3/4
XV-27 C	Hayward	Valve, check, #PVC, ball, size 1
XV-27 D	Hayward	Valve, check, Item XV-27 C above
XV-27 E	Powell	Valve, check, Item XV-19 B above
XV-28 A	Automatic Switch	Valve, solenoid operated, Item 86, Table 7-1
XV-28 B	Powell	Valve, check, Item XV-19 B above
XV-30 A, B	Automatic Switch	Valve, solenoid operated, Item 86, Table 7-1
XV-30 C	Nupro	Valve, check, Item XV-27 A above
XV-30 D, E	Hayward	Valve, check, Item XV-27 C above
XV-31 B	Asahi	Valve, check, #AV-CPVC, flanged, size 2
XV-32 A, B	Hayward	Valve, check, Item XV-27 C above
XV-38 B	Asahi	Valve, check, Item XV-31 B above
XV-40 A, B	Hayward	Valve, check, Item XV-27 C above
XV-42	Hayward	Valve, check, Item XV-27 C above
XV-43	Nupro	Valve, check, #8C2, size 1/2
XV-50	Automatic Switch	Valve, solenoid operated, Item 87, Table 7-1
XV-56 A, B, C	TEC Valve	Valve, check, #10-150-50, size 10

TABLE 7-2. Elements Listed in Piping and Instrument Diagram

Element Number	Manufacturer	Description
XY-8	Moore Products	Relay, low signal limit, #58L
XY-20 A, B	Moore Products	Relay, signal volume booster, #61H
XY-35	Moore Products	Relay, signal multiplier, #66BA2
XY-45	Moore Products	Relay, high signal selector, #585S
XY-46	Moore Products	Relay, high signal selector, Item XV-45 above

APPENDIX

ENGINEERING DRAWINGS FOR MAJOR PARTS OF THE LOS ALAMOS CAI DESIGN

Reproduced in this Appendix are reductions of the actual drawings used in designing and fabricating the CAI at Los Alamos. Full-sized copies of any of these drawings are available on request from Los Alamos National Laboratory Waste Management Group H-7, MS E517, P.O. Box 1663, Los Alamos, NM 87545, 505-667-7391.

PART NUMBER			PARTS LIST
PREFIX NUMBER	ITEM NUMBER	QUANTITY	DESCRIPTION
41-223570 D2	1	1	REPACKAGING WELL
-EXISTING-	2		EXISTING GLOVE BOX

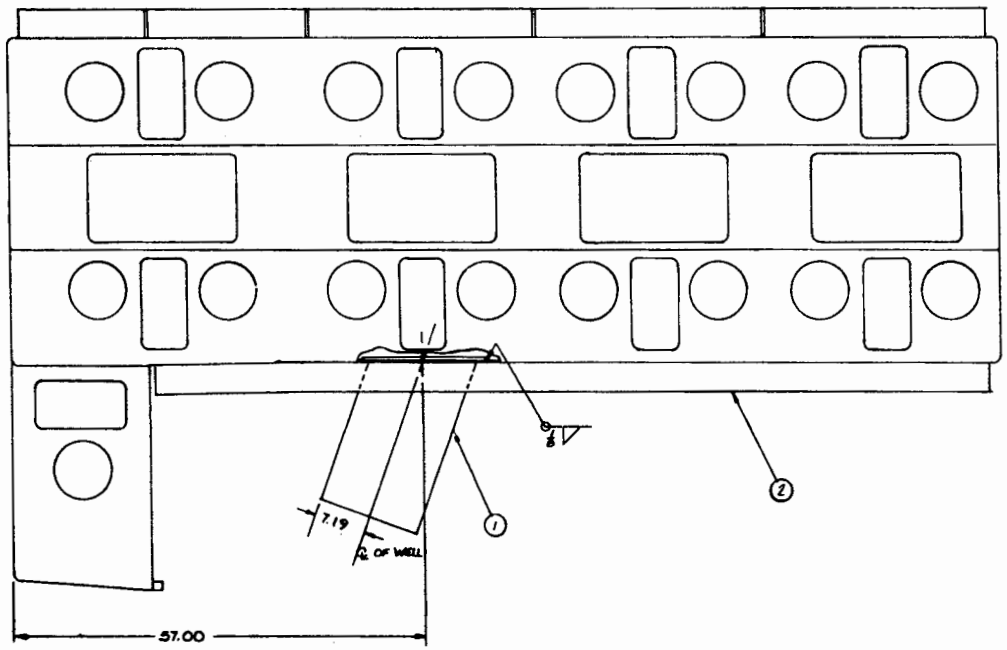

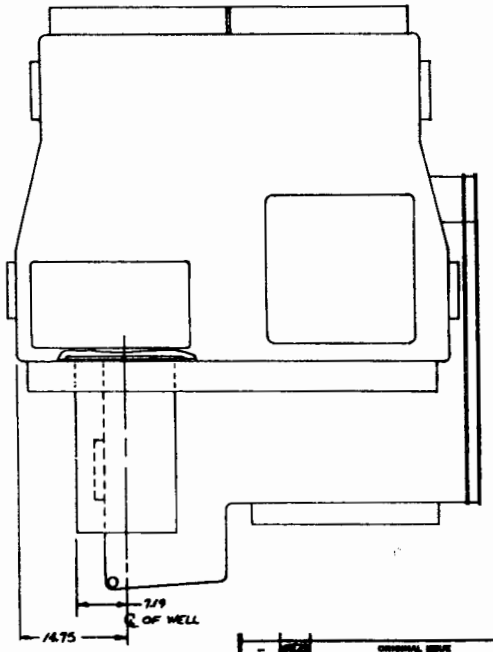

REV	ZONE	REVISIONS	DATE			
—		ORIGINAL ISSUE	—	—	—	—

CLASSIFICATION OF PROPERTY: UNC. TITLE GLOSS: UNC.

TITLE MODEL 80
REPACKAGING
WELL - ASSY

DRAWN	DG	1-8-80	B-1
CHECKED			
ENGRG		1-8-80	E-2
PROJ ENGR		1/11/11	N-7
APPROVED		1/11/11	N-7
APPROVED		1/11/11	N-7

SCALE 1-8 | SIZE D | 103Y-223000 | REV 1

1.	ORIGINAL ISSUE.	
2.	ADD 1/2" FILLET RADIUS.	
3.	ADD 1/4" FILLET RADIUS TO CHAMFER.	
4.	ADD 1/4" x .031 AND .062 GROOVE.	
5.	ADD DIMENSIONS & REMOVING TOLERANCE FOR ADD VALUES.	
6.	CHANGE GROOVE TO 1/8" FROM 1/4" PLACE.	
7.	CHANGE GROOVE TO .031 x .062 FROM .031 x .062.	

1		
2		
3		
4		
5		
6		
7		
8		
9		
10		
11		
12		
13		
14		
15		
16		
17		
18		
19		
20		
21		
22		
23		
24		
25		
26		
27		
28		
29		
30		
31		
32		
33		
34		
35		
36		
37		
38		
39		
40		
41		
42		
43		
44		
45		
46		
47		
48		
49		
50		
51		
52		
53		
54		
55		
56		
57		
58		
59		
60		
61		
62		
63		
64		
65		
66		
67		
68		
69		
70		
71		
72		
73		
74		
75		
76		
77		
78		
79		
80		
81		
82		
83		
84		
85		
86		
87		
88		
89		
90		
91		
92		
93		
94		
95		
96		
97		
98		
99		
100		
101		
102		
103		
104		
105		
106		
107		
108		
109		
110		
111		
112		
113		
114		
115		
116		
117		
118		
119		
120		
121		
122		
123		
124		
125		
126		
127		
128		
129		
130		
131		
132		
133		
134		
135		
136		
137		
138		
139		
140		
141		
142		
143		
144		
145		
146		
147		
148		
149		
150		
151		
152		
153		
154		
155		
156		
157		
158		
159		
160		
161		
162		
163		
164		
165		
166		
167		
168		
169		
170		
171		
172		
173		
174		
175		
176		
177		
178		
179		
180		
181		
182		
183		
184		
185		
186		
187		
188		
189		
190		
191		
192		
193		
194		
195		
196		
197		
198		
199		
200		

PART NUMBER	ITEM	QTY	PARTS LIST DESCRIPTION
4Y-223373 D 4	1	1	ELEVATOR SAFTEY DOOR, SUPPORT
4Y-223373 D 3	2	1	ELEVATOR SAFTEY DOOR, HINGE
4Y-223373 D 3	3	1	ELEVATOR SAFTEY DOOR, PLATE
4Y-223373 D 2	4	1	ELEVATOR SAFTEY DOOR, GRAVITY LATCH
NF-3047/6F-555	5	8	SCREW, STEEL MACHINE, PHILLIPS, #6-32X.50
NF-3821/6E-87	6	2	SCREW, STEEL MACHINE, FILLISTER #6-32X1.25
NF-4086/6M-139	7	2	WASHER, FLAT, STEEL #6
NF-4870/6M-194	8	2	WASHER, SHAKEPROOF, INT TEETH, #6
NF-1597/6M-9	9	2	NUT, STEEL, HEX, #6-32
USER SUPPLIED	10	2	CONDUIT TERMINATION
EE-1249/5BB-17	11	AR	CONDUIT, FLEX, ELEC, .50
EE-8372/WRC-60	12	1	SWITCH, PRECISION, SPOT, 15 A @ 125 VAC
EE-1571/5A-285	13	1	SWITCH ENCLOSURE

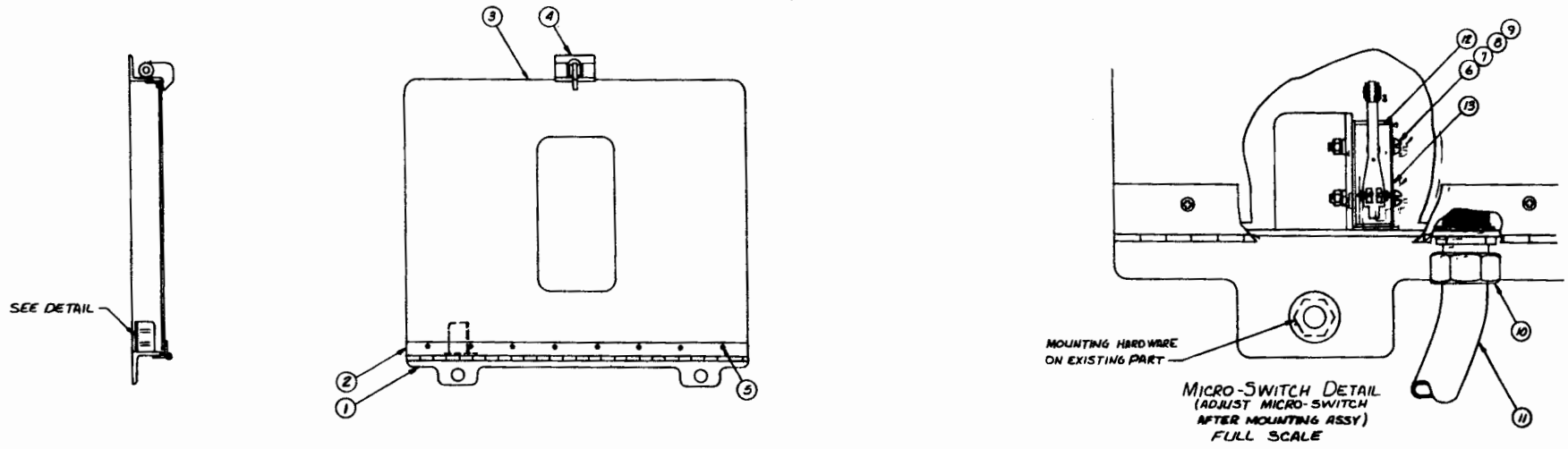

MICRO-SWITCH DETAIL
(ADJUST MICRO-SWITCH AFTER MOUNTING ASSY)
FULL SCALE

ORIGINAL ISSUE

MODEL 100
ELEVATOR SAFTEY DOOR ASSEMBLY

SCALE 1-8
108Y-223001

PART NUMBER	ITEM NUMBER	QUANTITY REQUIRED	PARTS LIST DESCRIPTION
4Y-223374-D 2	1	1	GLOVE BOX DOOR MOD, FIXED FLANGE "A"
4Y-223374-D 3	2	1	LARGE DOOR
4Y-223374-D 10	3	1	GASKET
4Y-223374-D 6	4	1	FIXED FLANGE "B"
4Y-223374-D	5	1	SMALL DOOR
4Y-223374-D 10	6	1	GLOVE BOX DOOR MOD, GASKET
USER SUPPLIED	7	38	NUT, STEEL, CAP, HEX, 1/2-13
NF-4815/6M-M8	8	38	WASHER, FLAT, STEEL - .50
USER SUPPLIED	9	32	NUT, STEEL, CAP, HEX, 5/8-16
NF-4813/6M-M6	10	32	WASHER, FLAT, STEEL - .875

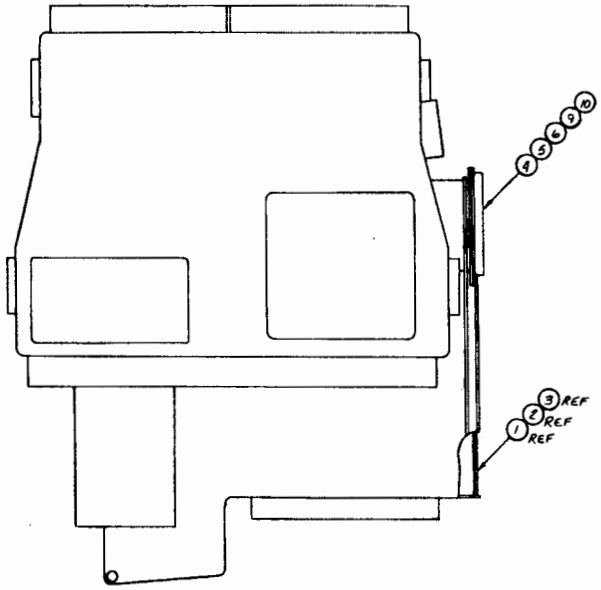

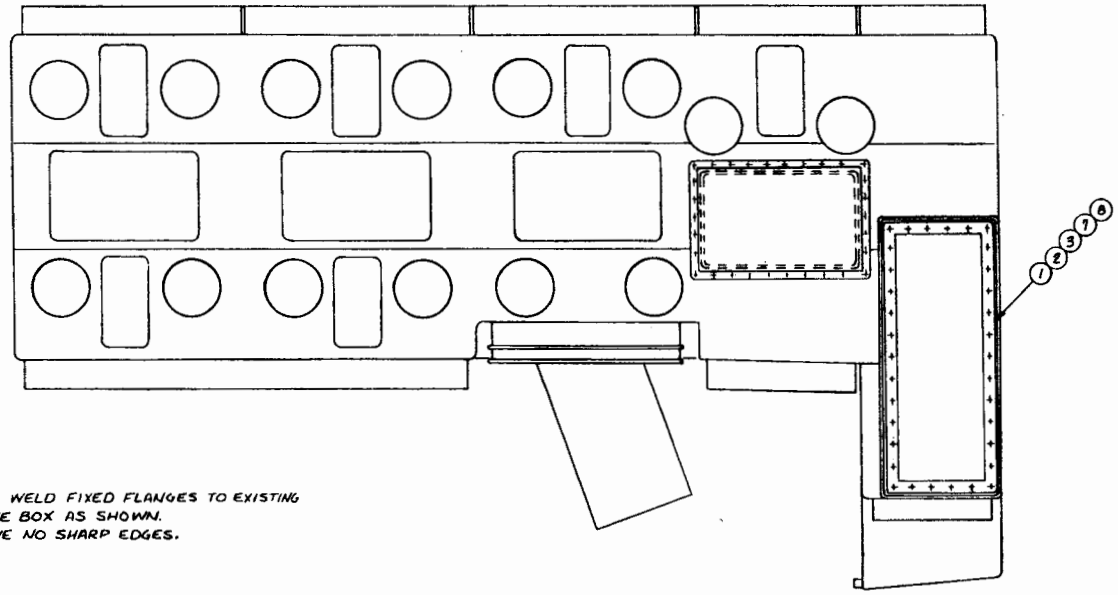

NOTES.
1. SEAL WELD FIXED FLANGES TO EXISTING GLOVE BOX AS SHOWN.
2. LEAVE NO SHARP EDGES.

REVISION	REVISIONS	DATE	DRAWN	CHECKED	APPROVED
—	ORIGINAL ISSUE	—	—	—	—

UNC

CLASSIFICATION OF DRAWING: UNC
PART: UNC TITLE BLOCK: UNC

TITLE MODEL 120
GLOVE BOX DOOR MODIFICATION
FINAL ASSY

	SIGNATURE	DATE	GROUP
DRAFTSMAN	[illegible]	1-22-80	H-7
ENGINEER	[illegible]	1-22-80	E-2
ENGINEER	[illegible]	1-30	E-2
FINAL CHECK	[illegible]	1/31/81	H-7
APPROVED	[illegible]	1/31/81	H-7
RELEASED	[illegible]	2-26-81	H7

TOLERANCES - UNLESS OTHERWISE NOTED
X = ± .0 FRACT. 0.XX = ± .0 FRACT. ANGULAR ± 0 FRACT.
0.X = ± .0 FRACT. 0.XXX = ± .0 FRACT. FINISH = FRACT.

SCALE 1-8 | SHEET 10 | DRAWING NO. 10JY-223002 | REV. B

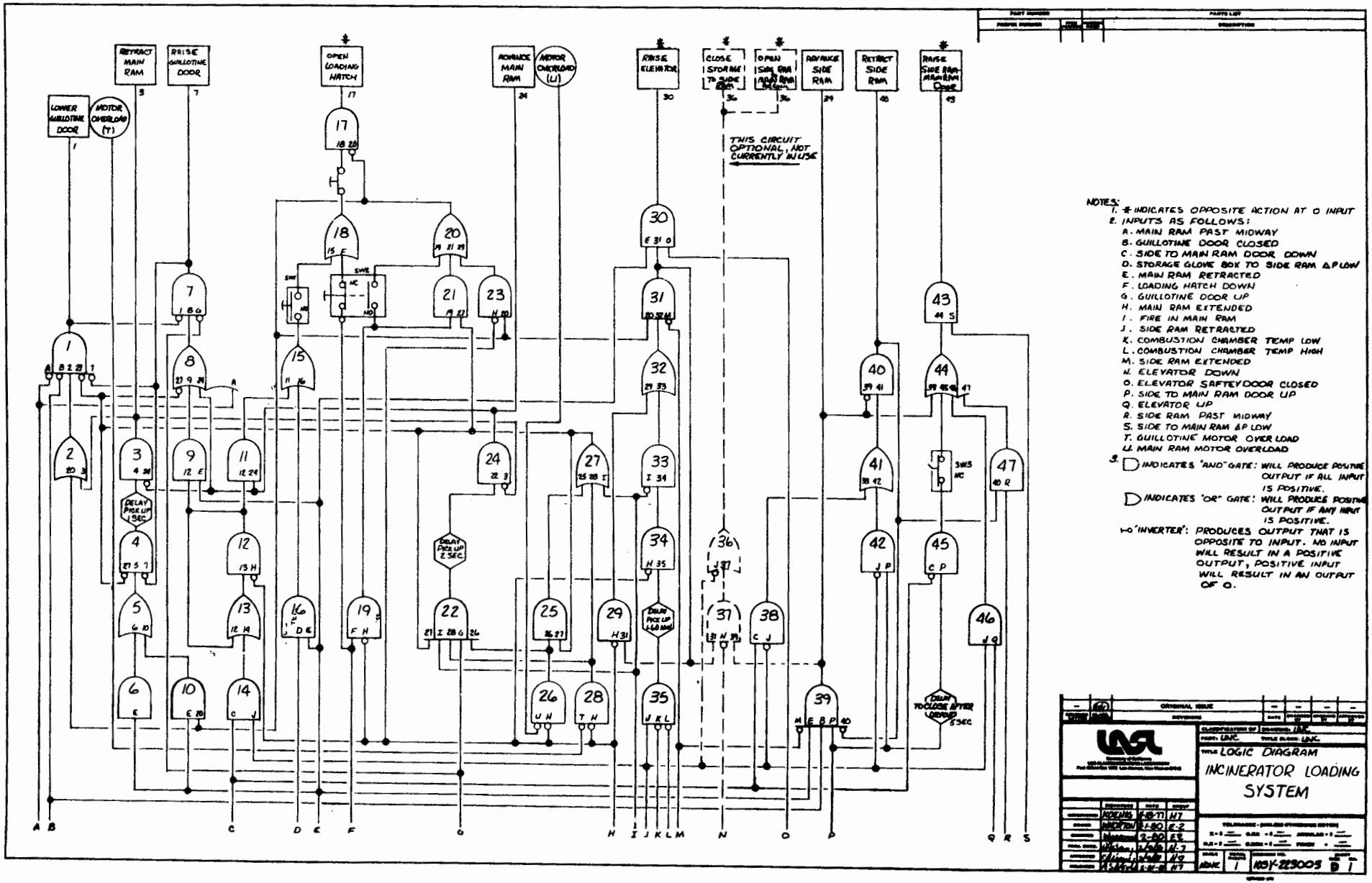

NOTES:

1. ⊕ INDICATES OPPOSITE ACTION AT 0 INPUT
2. INPUTS AS FOLLOWS:
   - A. MAIN RAM PAST MIDWAY
   - B. GUILLOTINE DOOR CLOSED
   - C. SIDE TO MAIN RAM DOOR DOWN
   - D. STORAGE GLOVE BOX TO SIDE RAM ΔP LOW
   - E. MAIN RAM RETRACTED
   - F. LOADING HATCH DOWN
   - G. GUILLOTINE DOOR UP
   - H. MAIN RAM EXTENDED
   - I. FIRE IN MAIN RAM
   - J. SIDE RAM RETRACTED
   - K. COMBUSTION CHAMBER TEMP LOW
   - L. COMBUSTION CHAMBER TEMP HIGH
   - M. SIDE RAM EXTENDED
   - N. ELEVATOR DOWN
   - O. ELEVATOR SAFTEY DOOR CLOSED
   - P. SIDE TO MAIN RAM DOOR UP
   - Q. ELEVATOR UP
   - R. SIDE RAM PAST MIDWAY
   - S. SIDE TO MAIN RAM ΔP LOW
   - T. GUILLOTINE MOTOR OVER LOAD
   - U. MAIN RAM MOTOR OVERLOAD
3. ⊃ INDICATES "AND" GATE: WILL PRODUCE POSITIVE OUTPUT IF ALL INPUT IS POSITIVE.
   ⊃ INDICATES "OR" GATE: WILL PRODUCE POSITIVE OUTPUT IF ANY INPUT IS POSITIVE.
   ⊸ "INVERTER": PRODUCES OUTPUT THAT IS OPPOSITE TO INPUT. NO INPUT WILL RESULT IN A POSITIVE OUTPUT, POSITIVE INPUT WILL RESULT IN AN OUTPUT OF 0.

PART NUMBER			PARTS LIST
PARTS NUMBER			DESCRIPTION

—		ORIGINAL ISSUE	—	—	—
REVISIONS		REVISIONS	DATE	CHECKED BY	CHECKED BY

CLASSIFICATION OF REVISIONS: UNC
PRINTS: UNC TITLE BLOCKS: UNC

TITLE: LOGIC DIAGRAM
INCINERATOR LOADING SYSTEM

	DESIGNATION	DATE	GROUP
DRAWN	HOEARS	11-18-77	H7
CHECKED	WHORTON	11-1-80	E-2
ENGINEER	[illegible]	2-80	E8
PROJ. ENGR.	[illegible]	2-4-80	H-7
APPROVED	[illegible]	2-4-80	H9
APPROVED	[illegible]	2-26-80	H7

TOLERANCE - UNLESS OTHERWISE NOTED
X = ± ___ 0.XX = ± ___ ANGULAR = ± ___
0.XX = ± ___ 0.XXX = ± ___ FINISH ___

SCALE: NONE | SHEET: 1 | DRAWING NO. 1031-223005 | REV: D | SHEET 1 OF 1

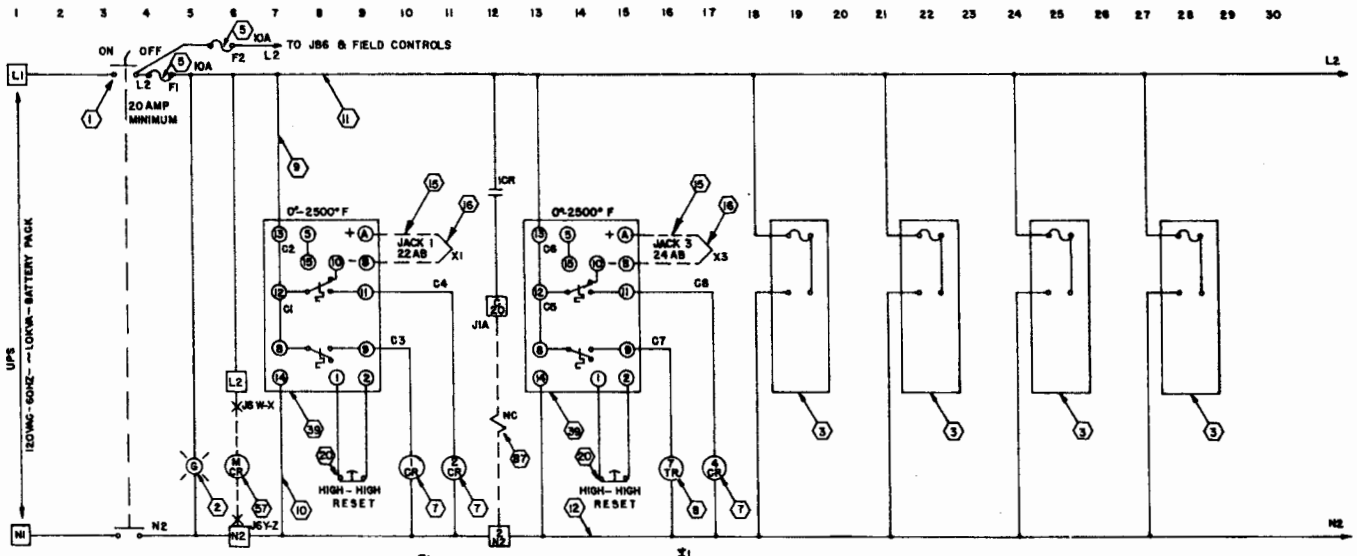

RACK POWER SWITCH

RACK POWER ON LIGHT

3 # LOCKOUT RELAYS 435-439 (1 OF 5)

LOWER CHAMBER HIGH-HIGH AND LOW-LOW TEMPERATURE SWITCH AND METER UNIT

LOWER CHAMBER TEMPERATURE LOW-LOW RELAY 12,129,342,357,400

LOWER CHAMBER TEMPERATURE HIGH-HIGH RELAY 244,342,394

PROCESS STEAM CONTROL VALVE SIGNAL BLOCK SOV

UPPER CHAMBER HIGH-HIGH AND LOW-LOW TEMPERATURE SWITCH AND METER UNIT

UPPER CHAMBER TEMPERATURE LOW-LOW RELAY 339,343,373-378,404

UPPER CHAMBER TEMPERATURE HIGH-HIGH RELAY 214,342,389

PLUGSTRIP

PLUGSTRIP

PLUGSTRIP

PLUGSTRIP

PART NUMBER		PARTS LIST	
PREFIX NUMBER	FIRST DIGIT	SUFFIX NUMBER	DESCRIPTION

REVISION LETTER	REVISION DESCRIPTION	REVISIONS	DATE	ENGINEER BY	CHECKED BY	APPROVED BY
—		ORIGINAL ISSUE	—	—	—	—

CLASSIFICATION OF DRAWING: UNC

PART: UNC TITLE BLOCK: UNC

TITLE

Combustion Control Rack Wiring Diagram

	SIGNATURE	DATE	GROUP
DRAFTSMAN	KOENIG	6-2-76	H7
DESIGNER	WHORTON	3-15-80	E2
DESIGNER	PIOLON	3-18-80	H7
FINAL REVIEW	KOENIG	6-2-76	H7
APPROVED		1/5/81	D-7
RELEASED		3-26-81	H7

TOLERANCE - (UNLESS OTHERWISE NOTED)

X = ± ___ 0.XX = ± ___ ANGULAR = ± ___

0.XX = ± ___ 0.XXX = ± ___ FRACTIONS = ___

SCALE: NONE SHEET NUMBER: 16 DRAWING NO. 103Y-223004D1 GROUP

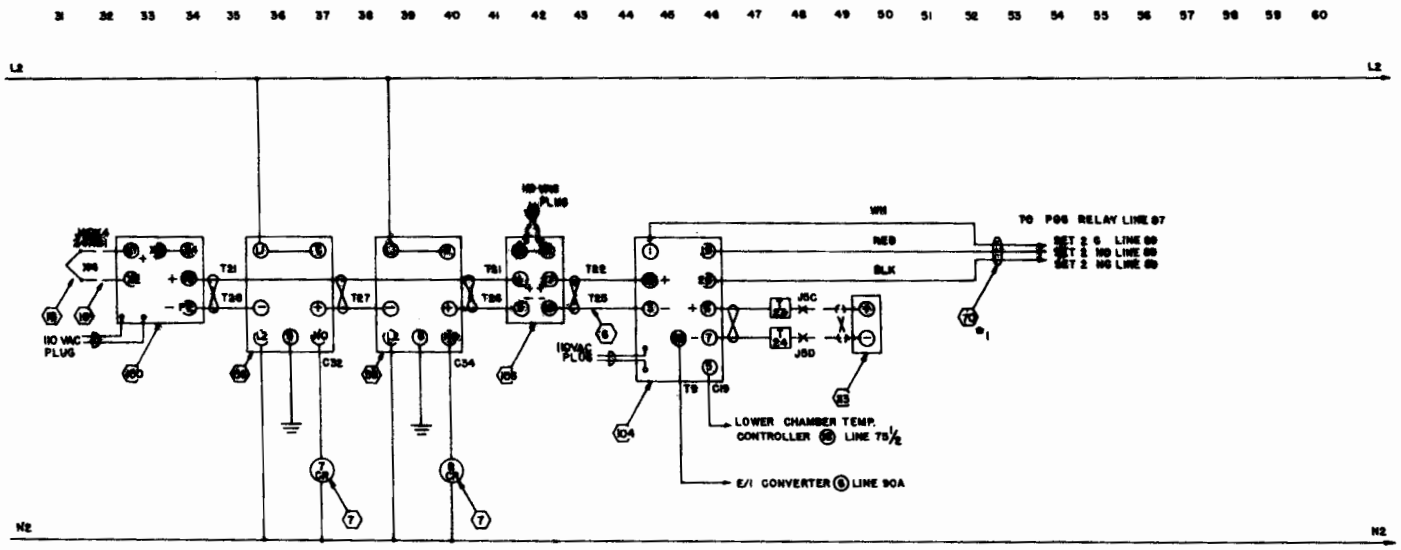

UPPER CHAMBER THERMOCOUPLE EMF/CURRENT CONVERTER

UPPER CHAMBER HIGH-HIGH TEMPERATURE ALARM

UPPER CHAMBER HIGH-HIGH TEMPERATURE RELAY 372,380,425

UPPER CHAMBER LOW-LOW TEMPERATURE ALARM

UPPER CHAMBER LOW-LOW TEMPERATURE RELAY 301

UPPER CHAMBER TEMPERATURE RECORDER (GREEN PEN) CP-2500P

UPPER CHAMBER TEMPERATURE CONTROLLER

UPPER CHAMBER FUEL GAS CONTROL VALVE I/P

PART NUMBER			PARTS LIST
PARTS NUMBER			DESCRIPTION

–		ORIGINAL ISSUE	–	–	–	–
REVISED BY	CHECK REVISED	REVISIONS	DATE	CHANGED BY	CHECKED BY	APPROVED BY

UNIVERSITY OF CALIFORNIA
LOS ALAMOS SCIENTIFIC LABORATORY
Post Office Box 1663 Los Alamos, New Mexico 87544

CLASSIFICATION OF DRAWING: UNC
PART: UNC TITLE BLOCK: UNC

TITLE
Combustion Control Rack Wiring Diagram

DESIGNED	HOENIG	6-5-78	H7
DRAWN	MORTON	5-11-80	EE
REVIEWED	RIOLON	9-18-80	H7
FUNC. CHECK	HOENIG	6-3-78	H7
APPROVED		2/5/81	H7
RELEASED		2-26-81	H7

TOLERANCE - (UNLESS OTHERWISE NOTED)
X = ± ___ 0.XX = ± ___ ANGULAR = ± ___
0.X = ± ___ 0.XXX = ± ___ FINISH - ___

SCALE NONE | TOTAL SHEETS 16 | DRAWING NO. 103Y-223004D2 | SHEET

OPTIONS 270

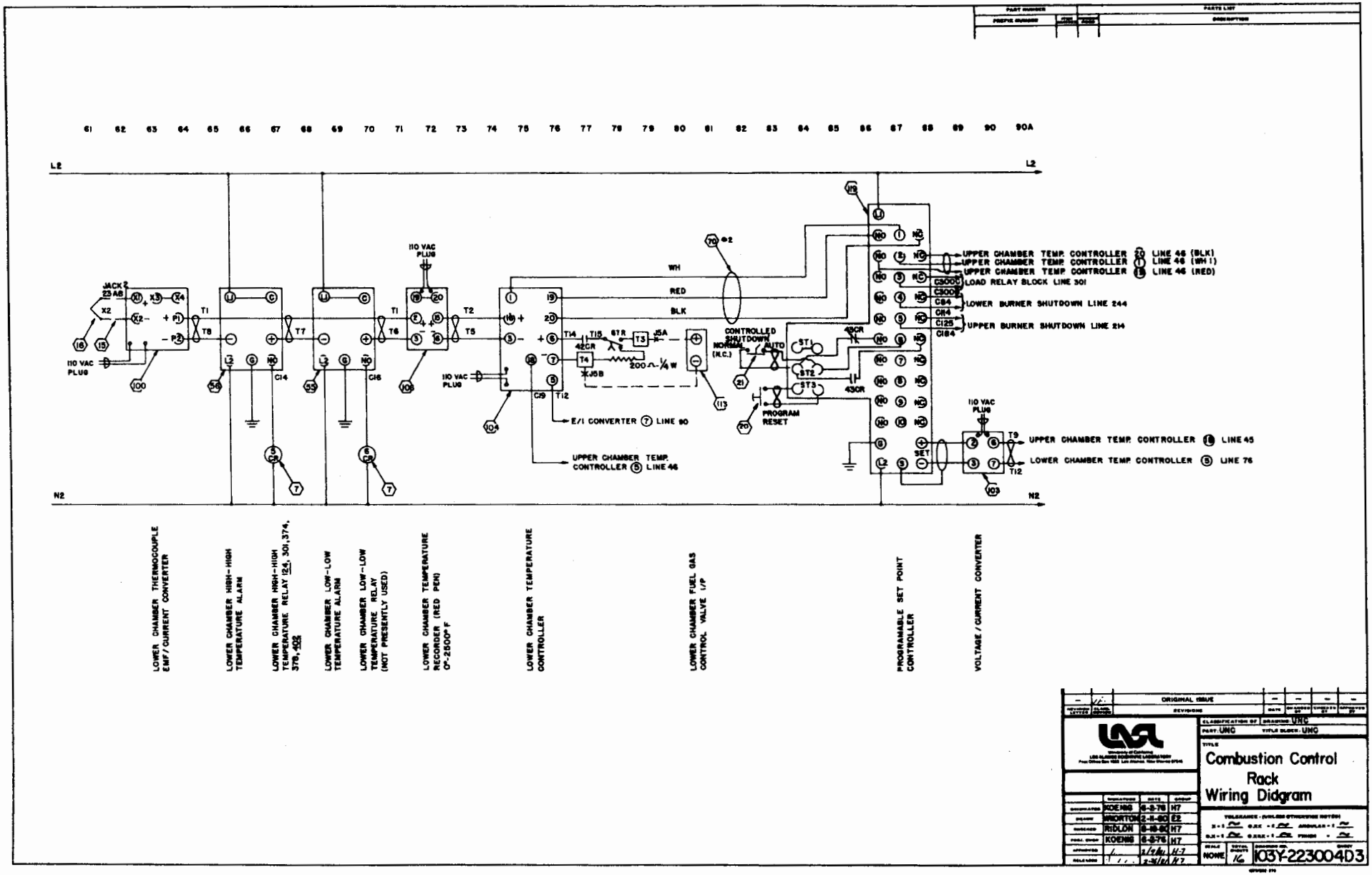

PART NUMBER	PARTS LIST
PREFIX NUMBER	DESCRIPTION

ORIGINAL ISSUE

DRAWING UNC

PART UNC TITLE BLOCK UNC

TITLE

Combustion Control Rack Wiring Didgram

DRAWN	KOENIG	6-3-76	H7
ENGRD	WORTON	2-11-80	EZ
SUPERVISED	RIDLON	6-18-80	H7
PROJ. ENGR	KOENIG	6-3-76	H7
APPROVED		2/28/80	H7
RELEASED		2-28-80	H7

SCALE NONE TOTAL SHEETS 16

DRAWING NO. 103Y-223004D3

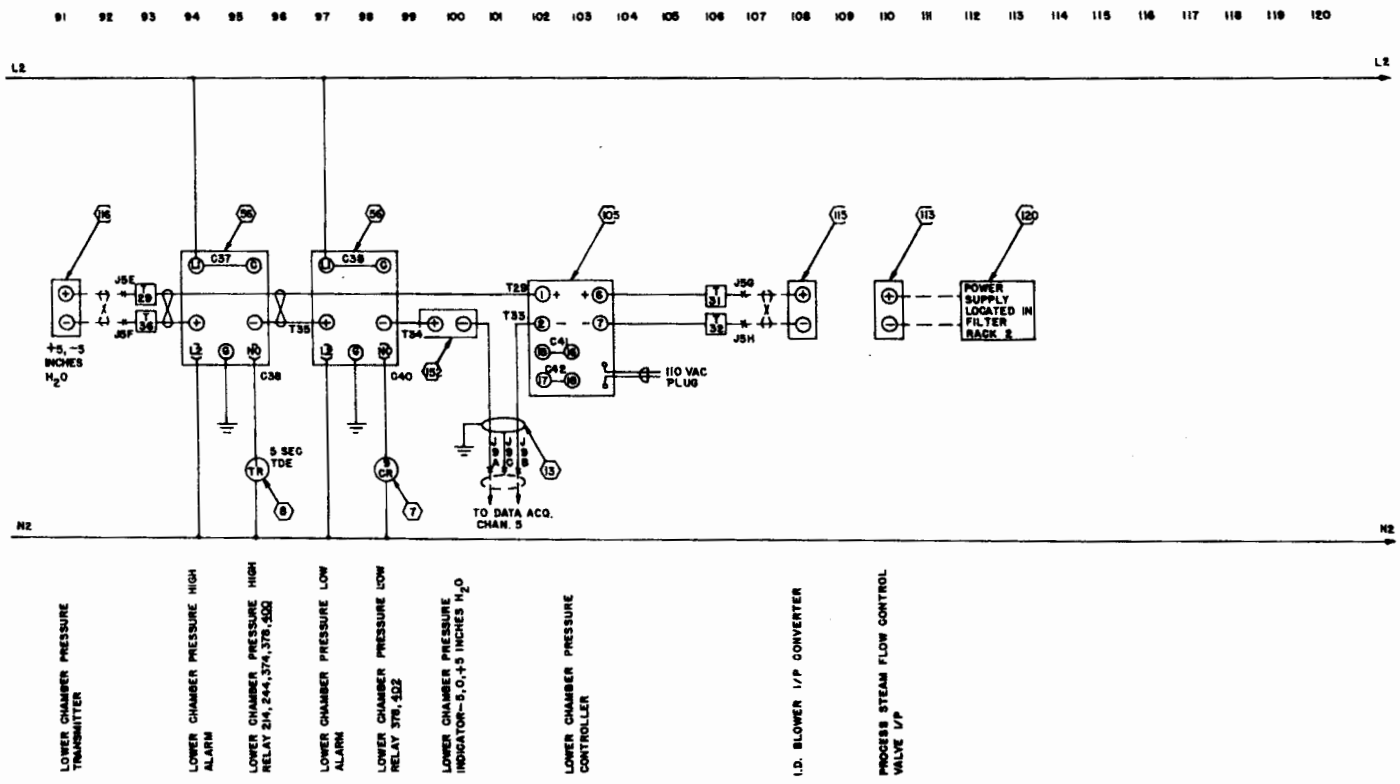

PART NUMBER			PARTS LIST
PREFIX NUMBER	TYPE	SUFFIX NUMBER	DESCRIPTION

—		ORIGINAL ISSUE	—	—	—	—
REVISED BY	CHANGE NOTICE	REVISIONS	DATE	CHANGED BY	CHECKED BY	APPROVED BY

University of California
LOS ALAMOS SCIENTIFIC LABORATORY
Post Office Box 1663 Los Alamos, New Mexico 87544

CLASSIFICATION OF DRAWING: UNC
PART: UNC TITLE BLOCK: UNC

TITLE
Combustion Control Rack Wiring Diagram

	SIGNATURE	DATE	GROUP
DRAWN BY	HOENIG	6-3-76	H7
CHECKED BY	MORTON	3-1-80	E2
ENGINEER	RIDLON	6-18-80	H7
PROJ. MGR.	HOENIG	6-3-76	H7
APPROVED BY	[illegible]	7/18/80	H7
APPROVED BY	[illegible]	7-18-80	H7

TOLERANCE - (UNLESS OTHERWISE NOTED)
X - ± [illegible] 0.XX - ± [illegible] ANGULAR - ± [illegible]
0.X - ± [illegible] 0.XXX - ± [illegible] FINISH - [illegible]

SCALE: NONE SHEET: 16 DRAWING NO. 103Y-223004D4

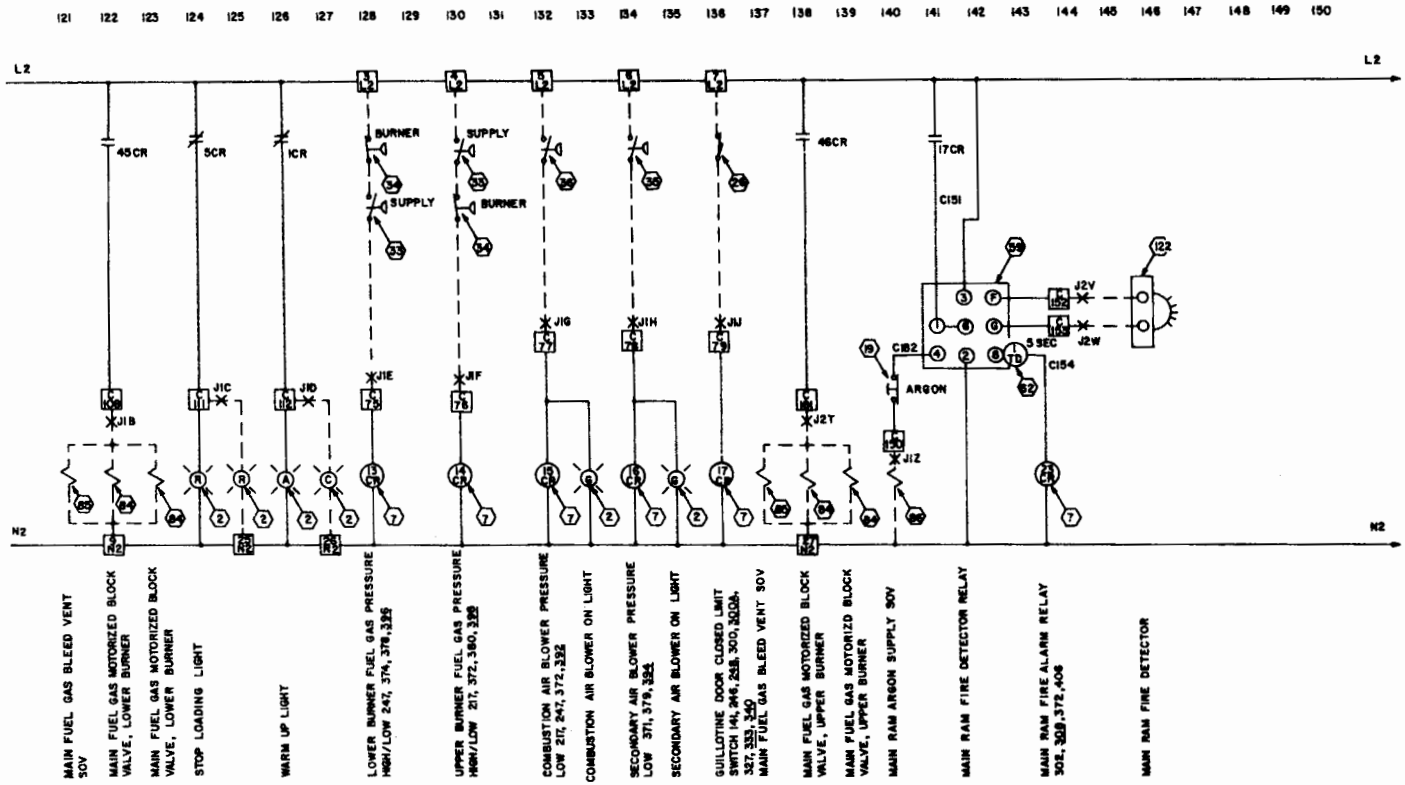

PART NUMBER			PARTS LIST
PREFIX NUMBER	ITEM NUMBER	SUFFIX	DESCRIPTION

—		ORIGINAL ISSUE	—	—	—
PRELIMINARY	FINAL	REVISIONS	DATE	ENGINEER BY	CHECKED BY	APPROVED BY

University of California
LOS ALAMOS SCIENTIFIC LABORATORY
Post Office Box 1663 Los Alamos, New Mexico 87545

CLASSIFICATION OF DRAWING: UNC
PART: UNC TITLE BLOCK: UNC

TITLE
Combustion Control Rack Wiring Didgram

	SIGNATURE	DATE	GROUP
DRAFTSMAN	KOENIG	6-5-76	H7
DESIGNER	WINORTON	2-11-80	E2
ENGINEER	RIDLON	8-18-80	H7
PROJ. ENGR.	KOENIG	6-2-76	H7
APPROVED BY		8/5/81	H7
DISTRIBUTION		8/26/81	H7

TOLERANCE - (UNLESS OTHERWISE NOTED)
X = ± ___ 0.XX = ± ___ ANGULAR = ± ___
0.X = ± ___ 0.XXX = ± ___ FINISH = ___

SCALE	TOTAL SHEETS	DRAWING NO.	REVISION
NONE	16	103Y-223004D5	

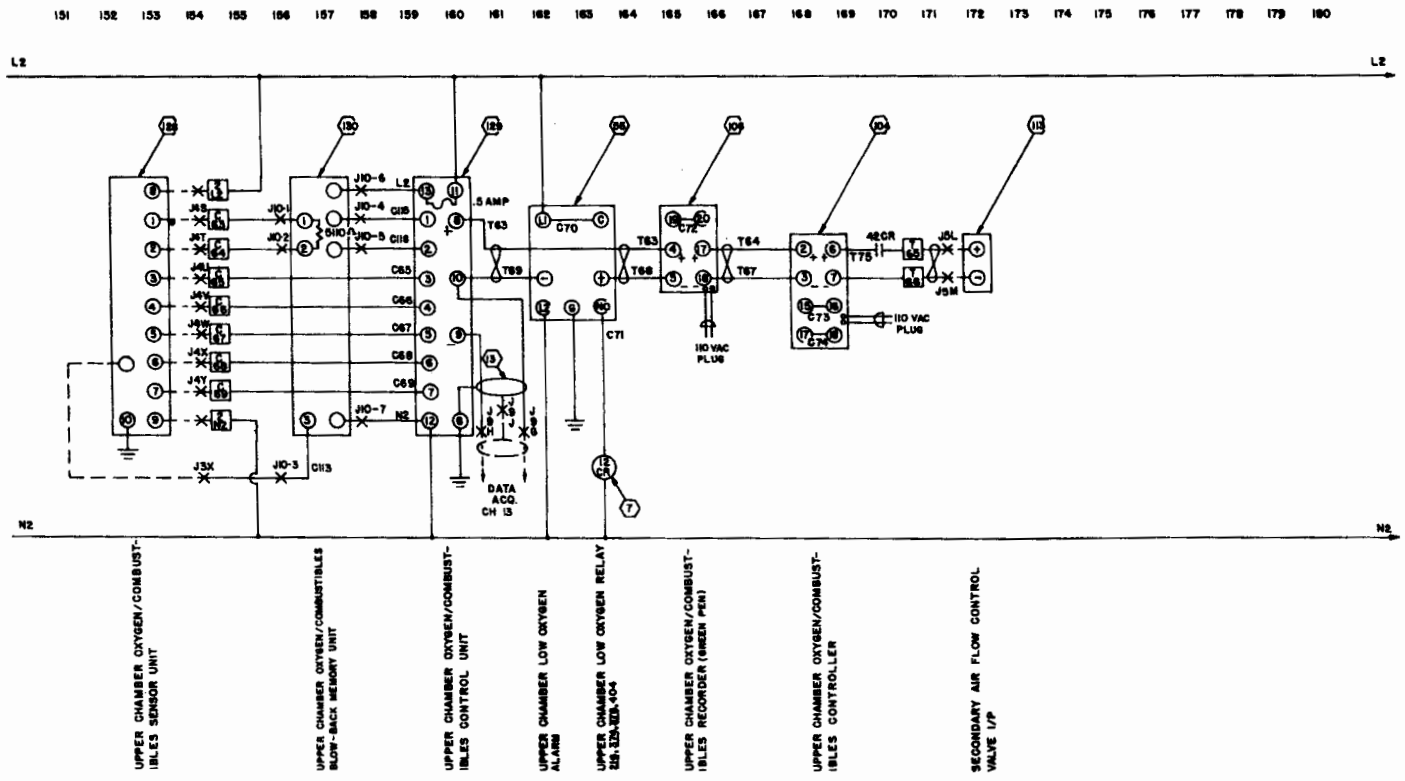

PART NUMBER			PARTS LIST
PROPRIETARY	ITEM NUMBER	QUANTITY	DESCRIPTION

REVISIONS	DATE	CHECKED BY	ENGINEER BY	APPROVED BY
ORIGINAL ISSUE				

CLASSIFICATION OF DRAWING: UNC

PART: UNC TITLE BLOCK: UNC

TITLE

Combustion Control Rack Wiring Diagram

	SIGNATURE	DATE	GROUP
DESIGNED	KOENIG	6-3-76	H7
TRACED	SHORTONG	3-8-80	E2
CHECKED	RIOLON	9-19-80	H7
PROJ. ENGR.	KOENIG	6-3-76	H7
APPROVED		7/1/80	H7
RELEASED		7-21-80	H7

TOLERANCE - (UNLESS OTHERWISE NOTED)
X = ± 0.XX = ± ANGULAR = ±
0.X = ± 0.XXX = ± FINISH =

SCALE: NONE TOTAL SHEETS: 16 DRAWING NO. 1K03Y-223004D6 GROUP

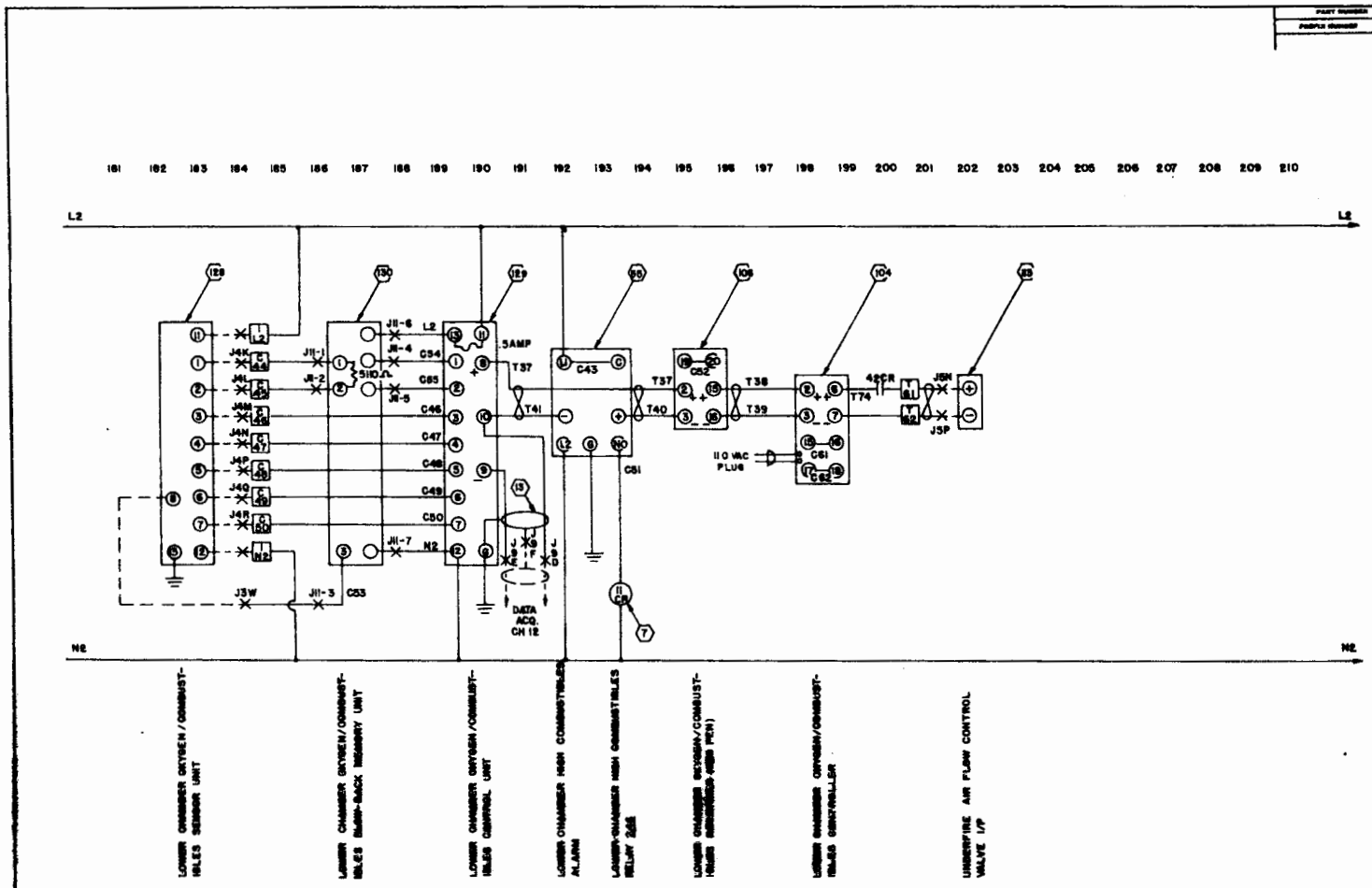

PART NUMBER			PARTS LIST
PROFILE NUMBER	LTR	REV	DESCRIPTION

ORIGINAL ISSUE

	DONATION	DATE	GROUP
DRAWN	MOENIG	8-3-79	H7
CHECKED	WORTON	8-8-80	E2
DESIGNED	RIDLON	8-18-80	H7
PROJ. ENGR.	MOENIG	8-2-79	H7
APPROVED		1/21/81	H7
RELEASED		2-26-81	H7

CLASSIFICATION OF DRAWING: UNC

PART: UNC TITLE BLOCK: UNC

TITLE
Combustion Control Rack Wiring Diagram

TOLERANCES - (UNLESS OTHERWISE NOTED)
X = ± 0.XX = ± ANGULAR = ±
0.X = ± 0.XXX = ± FINISH =

SCALE NONE | SHEET 1 OF 16 | DRAWING NO. 103Y-22300407 | GROUP

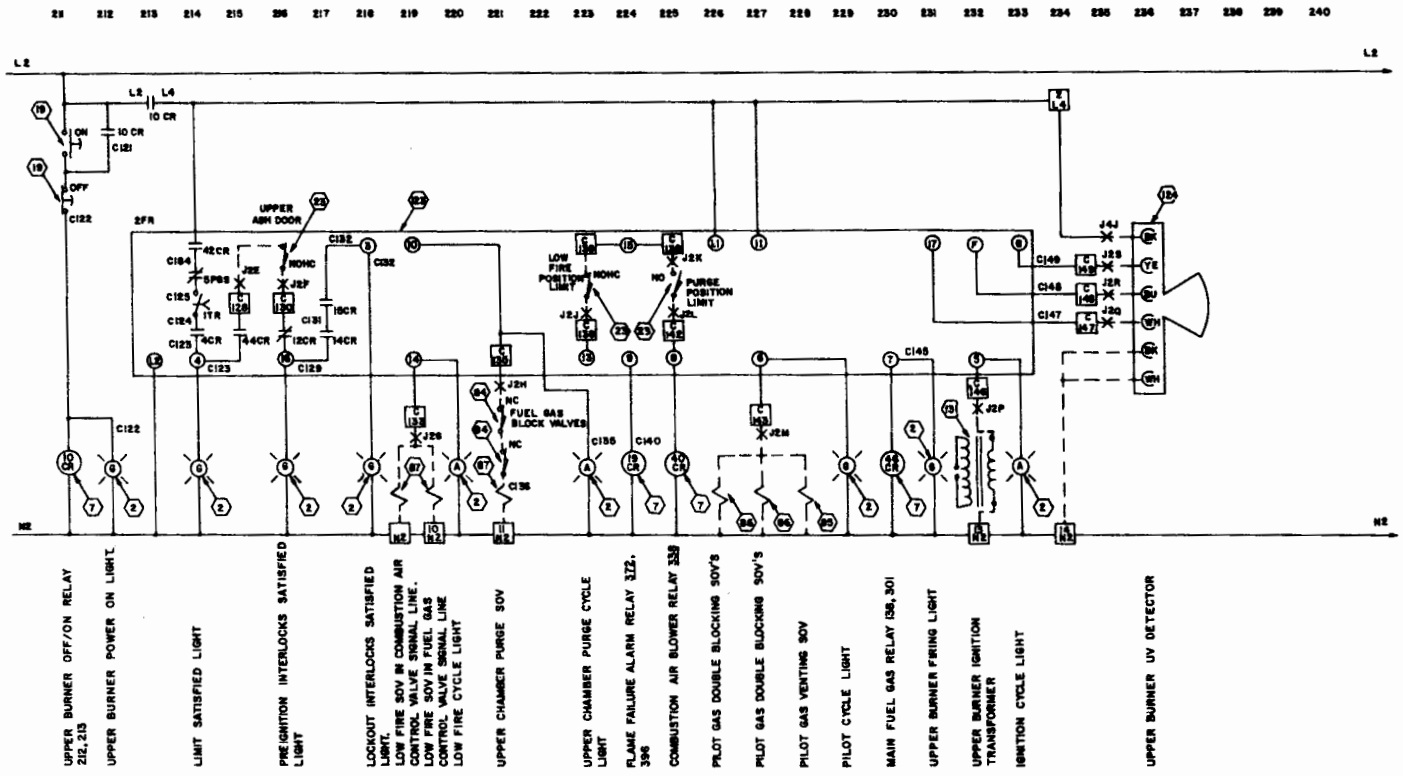

PART NUMBER			PARTS LIST
PREFIX NUMBER	TYPE	SUFFIX NUMBER	DESCRIPTION

—		ORIGINAL ISSUE	—	—	—
REVISIONS			DATE	CHECKED BY	APPROVED BY

University of California
Los Alamos Scientific Laboratory
Post Office Box 1663 Los Alamos, New Mexico 87544

	INITIATOR	DATE	GROUP
DESIGNED	RDENIS	6-2-76	H7
DRAWN	WHORTON	2-11-80	H2
CHECKED	RDLON	9-19-80	H7
FINAL CHECK	RDENIS	6-2-76	H7
APPROVED			
RELEASED			

CLASSIFICATION OF DRAWING: UNC
PART: UNC TITLE BLOCK: UNC

TITLE
Combustion Control Rack Wiring Diagram

TOLERANCE - (UNLESS OTHERWISE NOTED)
X = ± ___ 0.XX = ± ___ ANGULAR = ± ___
0.X = ± ___ 0.XXX = ± ___ FINISH - ___

SCALE	TOTAL SHEETS	DRAWING NO.	SHEET
NONE	16	103Y-223004D8	

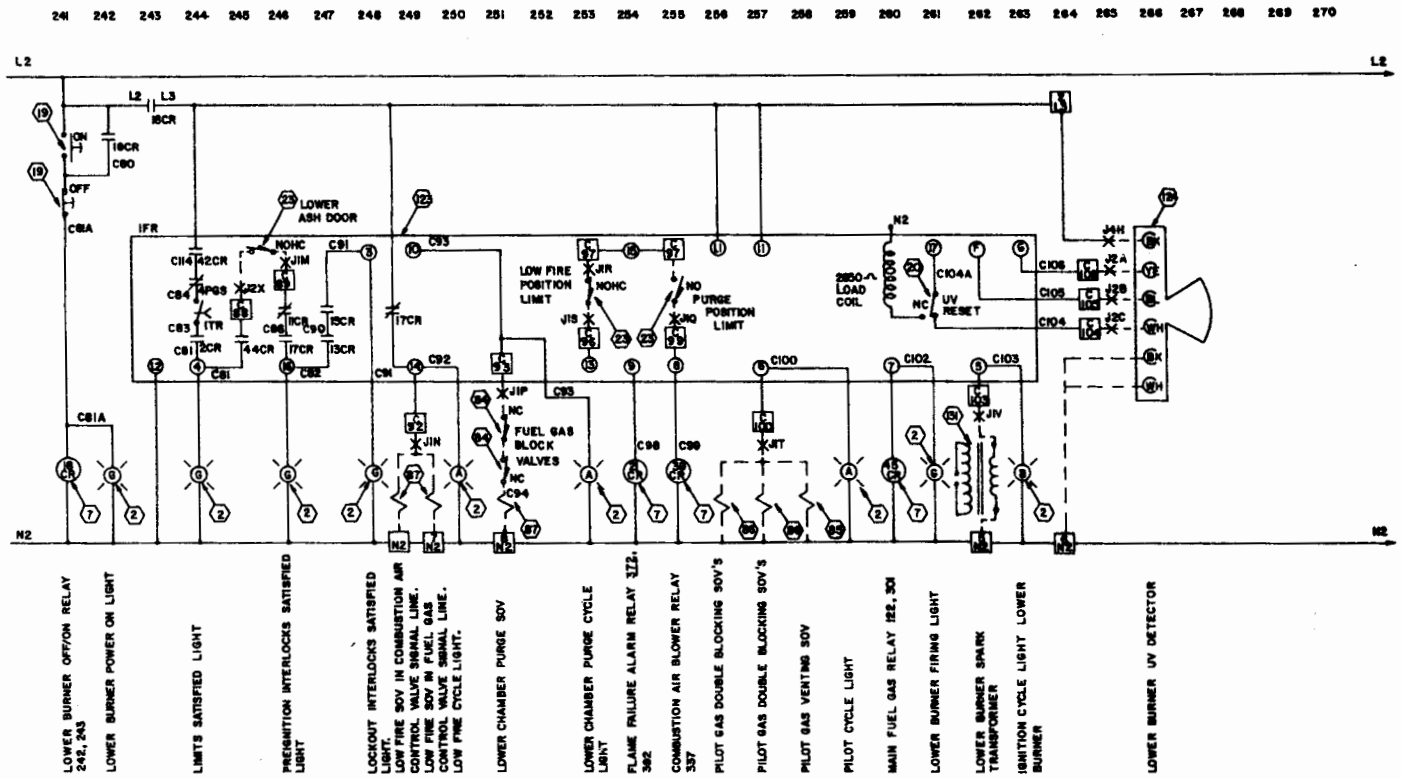

PART NUMBER			PARTS LIST
PREFIX NUMBER	FIGURE NUMBER	SUFFIX NUMBER	DESCRIPTION

—		ORIGINAL ISSUE		—	—	—	—
SUPERSEDES LETTER	SUPERSEDES DRAWING	REVISIONS		DATE	APPROVED BY	CHECKED BY	APPROVED BY

CLASSIFICATION OF DRAWING: UNC

PART: UNC TITLE BLOCK: UNC

TITLE

Combustion Control Rack Wiring Diagram

	SIGNATURE	DATE	GROUP
DRAWN BY	MOENIG	8-3-79	H7
CHECKED	Wharton	9-1-80	E2
APPROVED	RIDLON	10-10-80	H7
FINAL CHECK	MOENIG	8-3-79	H7
APPROVED		8/5/86	H-2
RELEASED		2-26-87	HP

TOLERANCE - (UNLESS OTHERWISE NOTED)

X = ± ___ 0.XX = ± ___ ANGULAR = ± ___

0.X = ± ___ 0.XXX = ± ___ FINISH = ___

SCALE: NONE SHEET: 1 OF 1 DRAWING NO. 103Y-223004D9

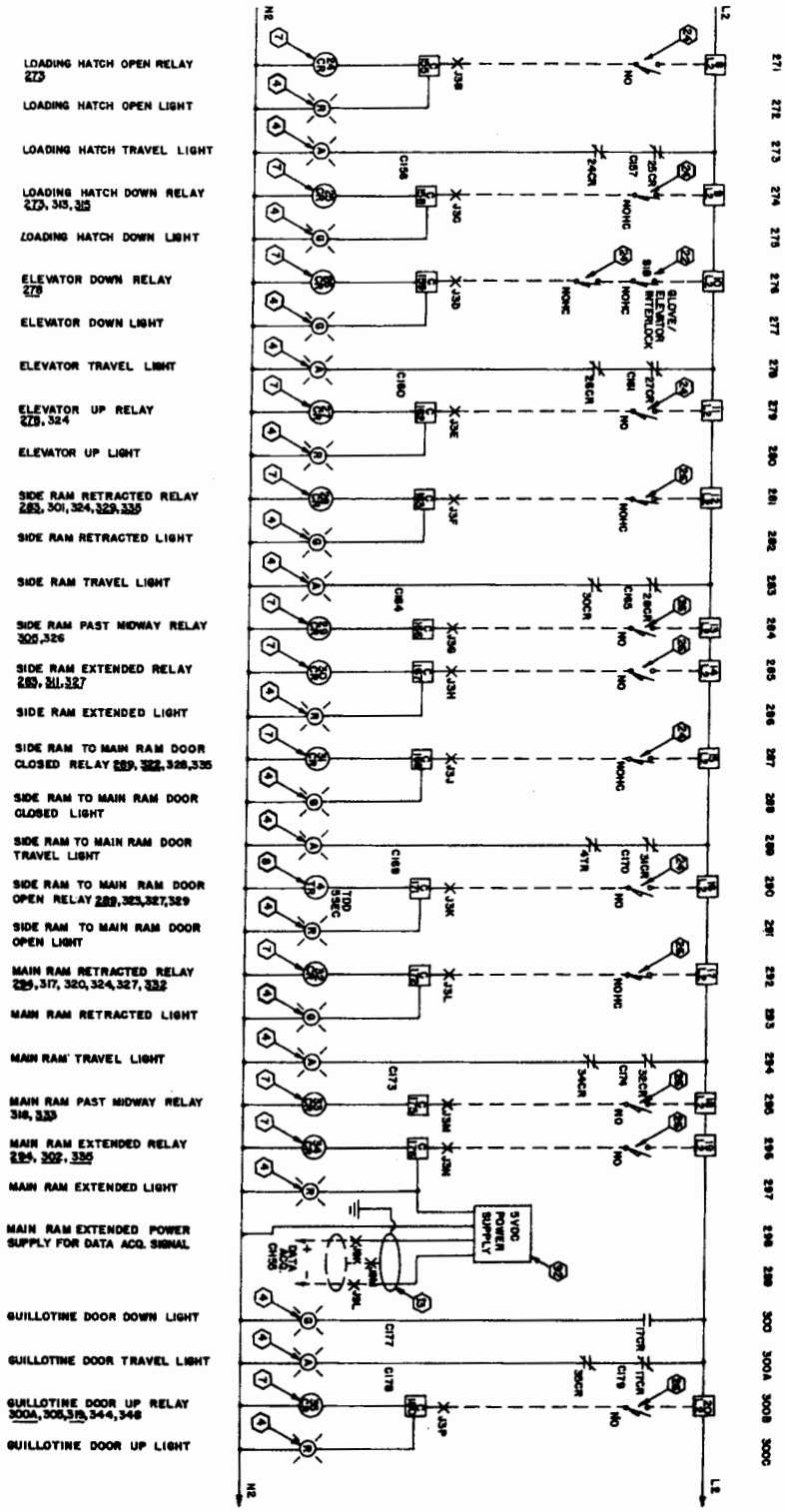

Combustion Control Rack Wiring Diagram

1031-223004D10

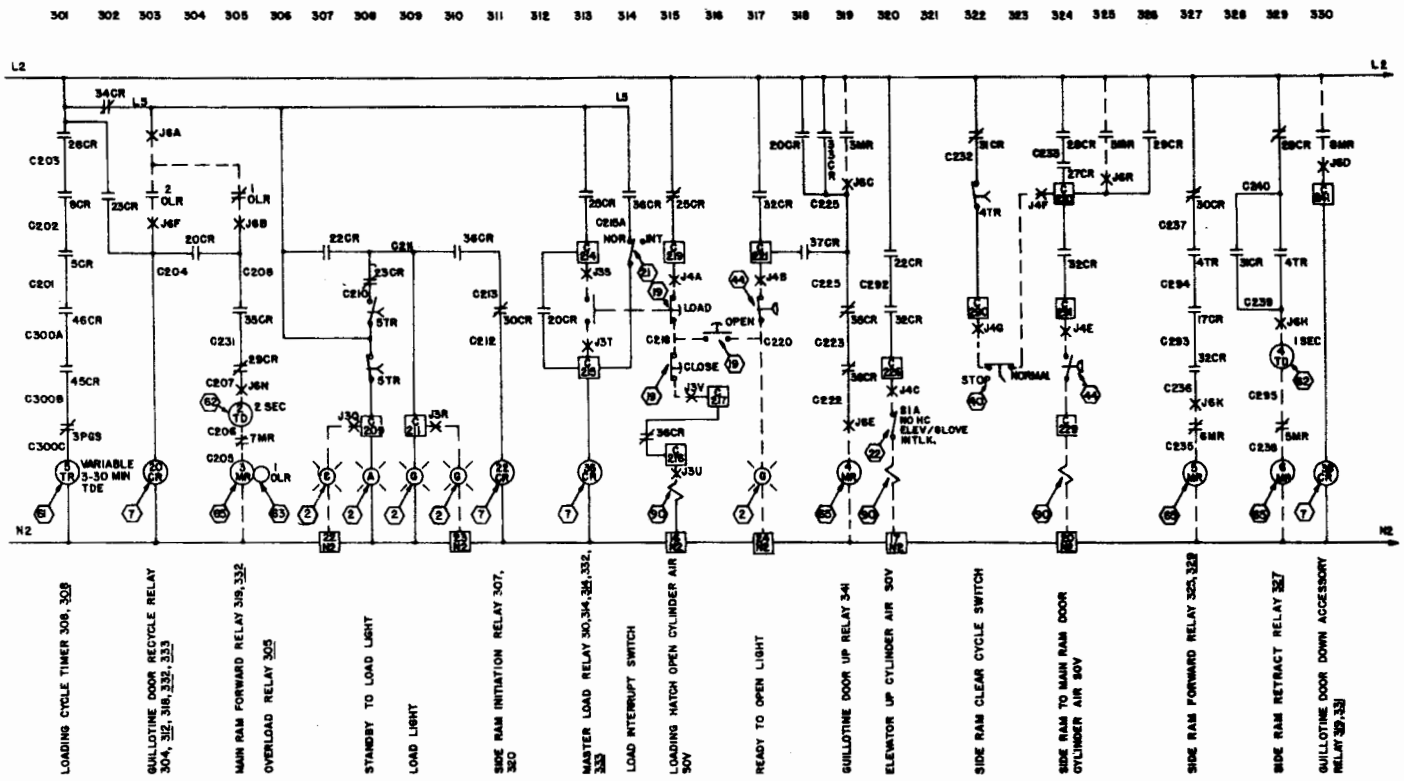

PART NUMBER		PARTS LIST
PROPER NUMBER		DESCRIPTION

REVISION LETTER	REVISION CONTROL	REVISIONS	DATE	CHECKED BY	DRAWN BY	APPROVED BY
–		ORIGINAL ISSUE	–	–	–	–

Laboratory of Geophysics
Los Alamos Scientific Laboratory
Post Office Box 1663 Los Alamos, New Mexico 87544

CLASSIFICATION OF DRAWING: UNC
PART: UNC TITLE BLOCK: UNC

TITLE
Combustion Control Rack Wiring Diagram

	SIGNATURE	DATE	GROUP
DRAWN BY	KOENIG	6-9-76	H7
CHECKED	WINGTON	8-8-80	E2
APPROVED	RIDLON	8-18-80	H7
FIELD ENGR.	KOENIG	8-9-76	H-7
APPROVED			H-3
APPROVED			H7

TOLERANCES - (UNLESS OTHERWISE NOTED)
X = ± 0.X = ± 0.XX = ± ANGULAR = ±
0.XX = ± 0.XXX = ± FRACTIONS = ±

SCALE: NONE | TOTAL SHEETS: 16 | DRAWING NO. 103Y-223004011 | GROUP

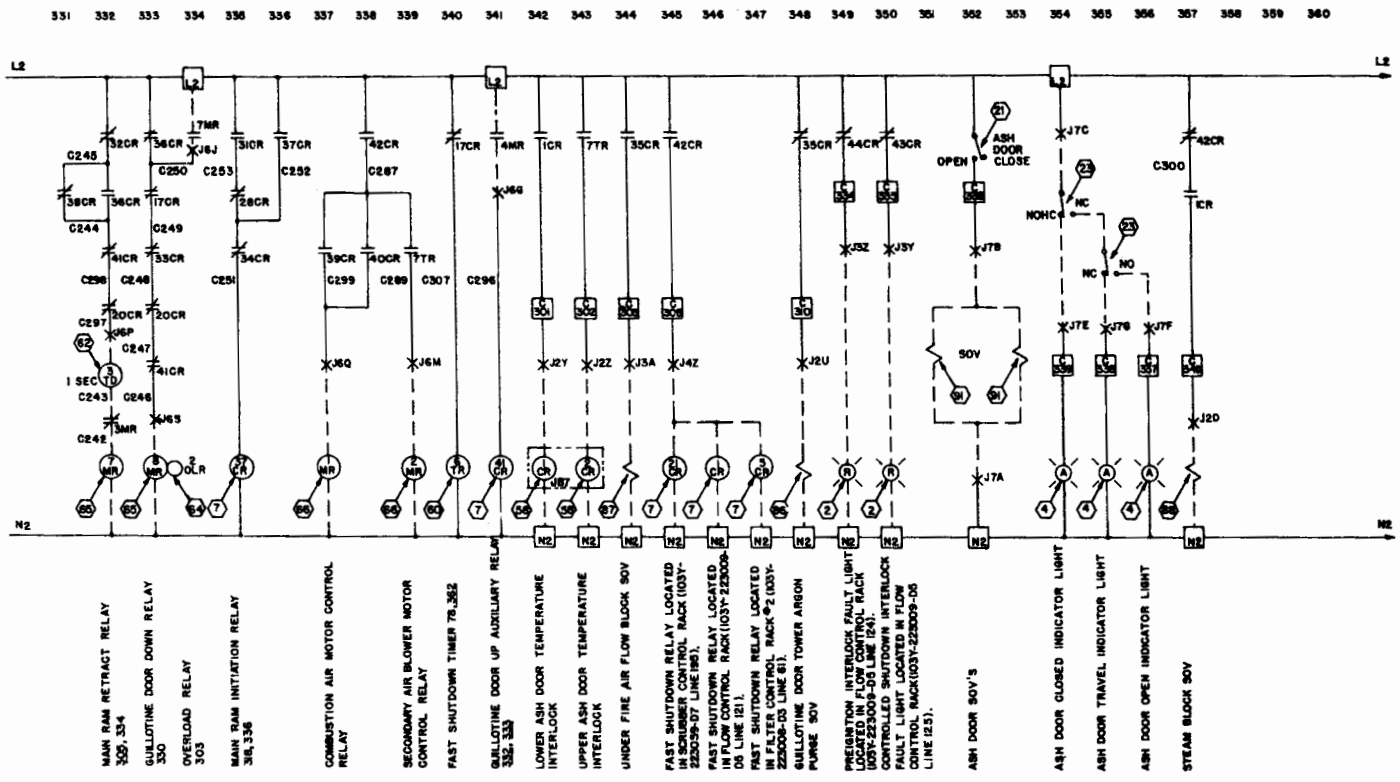

ORIGINAL ISSUE

REVISIONS

CLASSIFICATION OF DRAWING: UNC

PART: UNC TITLE BLOCK: UNC

TITLE

Combustion Control Rack Wiring Diagram

DRAWN	KOENIG	8-8-76	H7
	HIDETON	3-8-80	E2
	RIDLON	8-18-80	H7
	KOENIG	8-8-76	H7

SCALE NONE

TOTAL SHEETS 16

103Y-223004D12

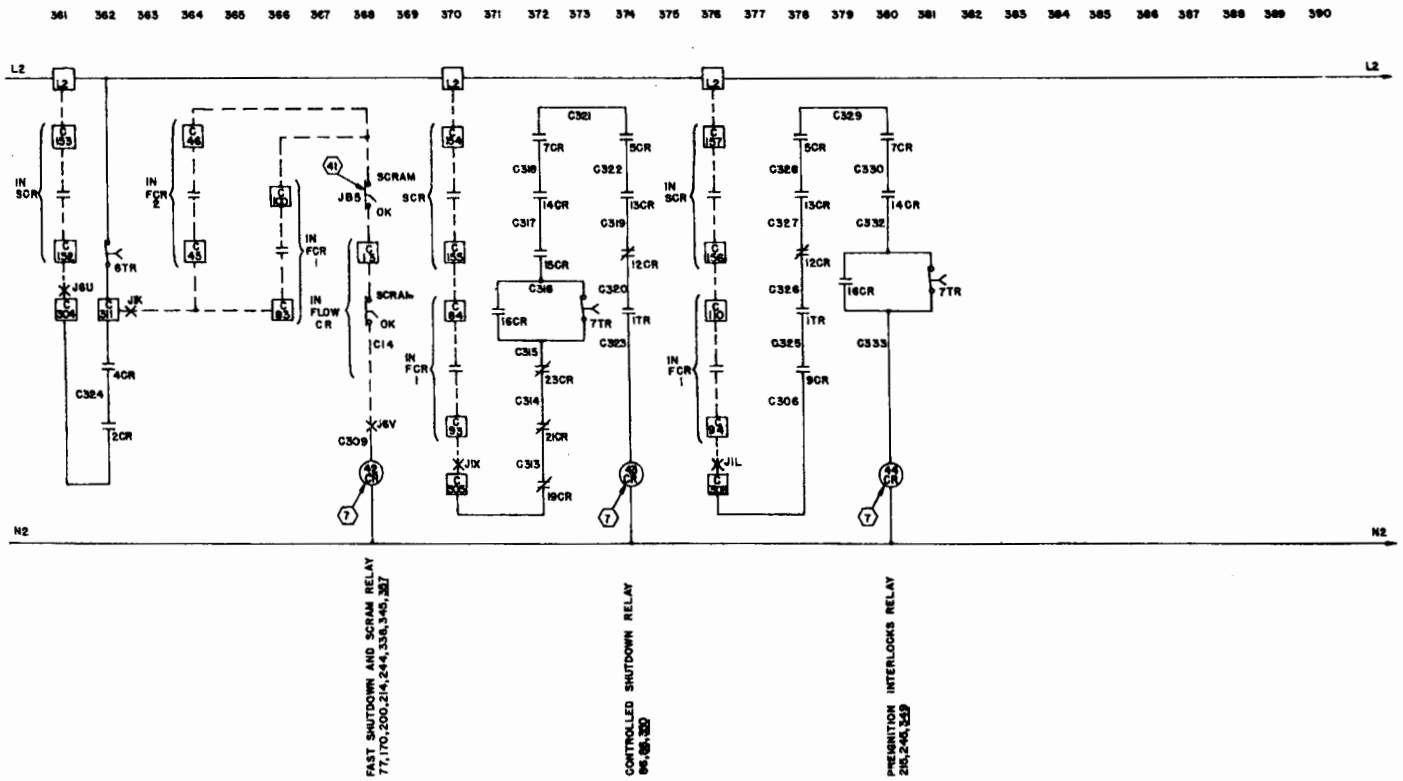

PART NUMBER			PARTS LIST
PARTS NUMBER	FIELD	SHEET	DESCRIPTION

–	C	ORIGINAL ISSUE	–	–	–
REVISION LETTER	CLASS. CHANGE	REVISIONS	DATE	DRAWN BY	CHECKED BY	APPROVED BY

CLASSIFICATION OF DRAWING: UNC

PART: UNC TITLE BLOCK: UNC

LOS ALAMOS SCIENTIFIC LABORATORY
Post Office Box 1663, Los Alamos, New Mexico 87544

TITLE
Combustion Control Rack Wiring Diagram

	SIGNATURE	DATE	GROUP
DESIGNATED	KOENIG	6-2-76	H7
DRAWN	WORTON	5-11-80	E2
CHECKED	RIDLON	6-10-80	H7
PROJ. ENGR.	KOENIG	6-3-76	H7
APPROVED	[illegible]	6/4/80	H-7
RELEASED	[illegible]	6-24-80	EP

TOLERANCE - UNLESS OTHERWISE NOTED
X = ± ~ 0.XX = ± ~ ANGULAR = ± ~
0.XX = ± ~ 0.XXX = ± ~ FINISH - ~

SCALE: NONE TOTAL SHEETS: 16 DRAWING NO. 103Y-223004D13 SHEET

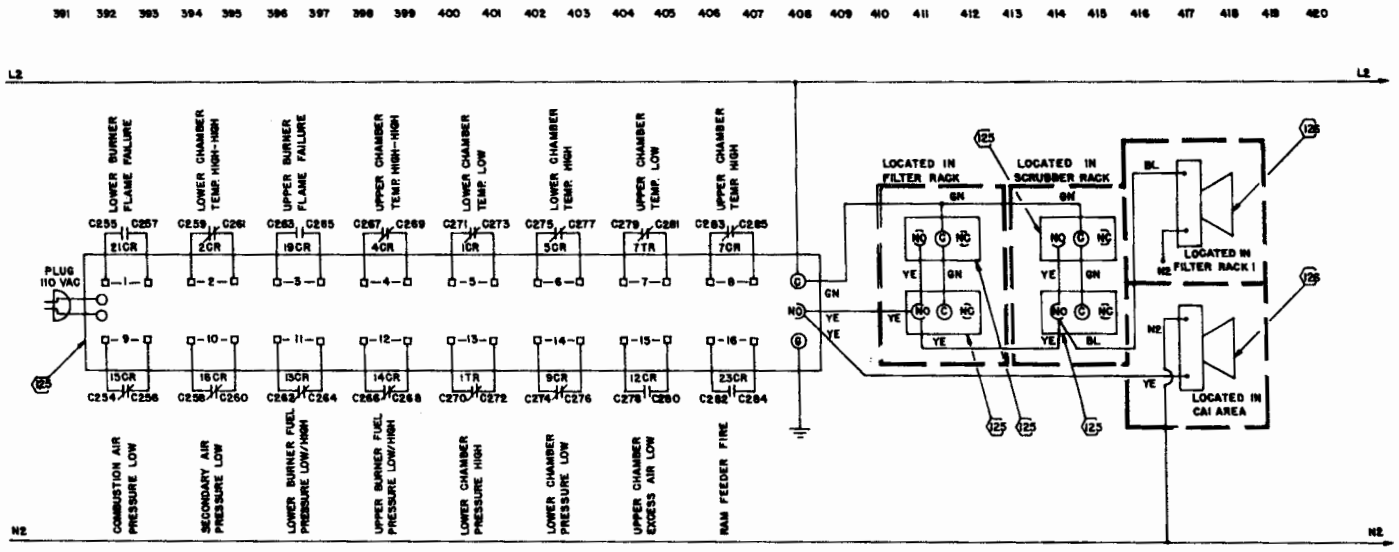

ANNUNCIATOR

PART NUMBER			PARTS LIST
PROFILE NUMBER	STOCK NUMBER	SHEET SIZE	DESCRIPTION

—	—	ORIGINAL ISSUE	—	—	—	—
REVISED LETTER	CLOSE CONTROL	REVISIONS	DATE	DRAWN BY	DESIGNED BY	APPROVED BY

Division of Contract Operations
LOS ALAMOS SCIENTIFIC LABORATORY
Post Office Box 1663 Los Alamos, New Mexico 87544

CLASSIFICATION OF DRAWING: UNC
PART: UNC TITLE BLOCK: UNC

TITLE
Combustion Control Rack Wiring Diagram

	SIGNATURE	DATE	GROUP
CALCULATED	KOENIG	6-2-76	H7
DRAWN	MORTON	5-5-60	E2
DESIGNED	NOLON	5-15-60	H7
PROJ. ENGR.	KOENIG	6-2-76	H7
APPROVED	—	2/6/82	H7
RELEASED	[illegible]	2-24-82	H7

TOLERANCE - UNLESS OTHERWISE NOTED
X = ± ___ O.XX = ± ___ ANGULAR = ± ___
O.X = ± ___ O.XXX = ± ___ FINISH - ___

SCALE NONE | REVISION REPORTS 16 | DRAWING NO. 103Y-223004D14

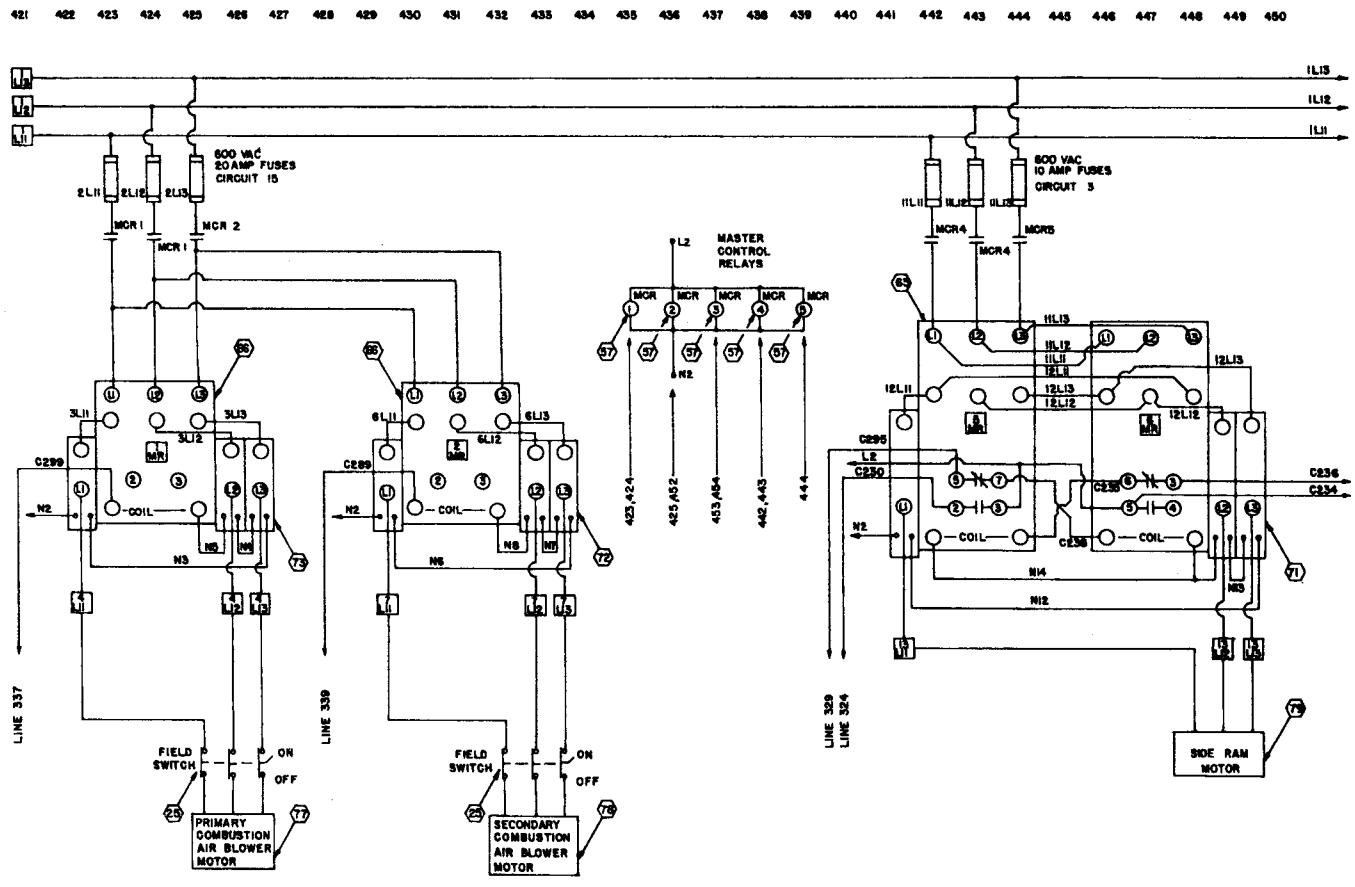

PART NUMBER		PARTS LIST	
PROPER NUMBER	CODE IDENT NO.	DESCRIPTION	

REVISED BY	CHECKED BY	REVISIONS	DATE	CHANGED BY	CHECKED BY	APPROVED BY
—		ORIGINAL ISSUE	—	—	—	—

University of California
LOS ALAMOS SCIENTIFIC LABORATORY
Post Office Box 1663 Los Alamos, New Mexico 87545

CLASSIFICATION OF DRAWING: UNC
PART: UNC TITLE BLOCK: UNC

TITLE
Combustion Control Rack Wiring Diagram

	SIGNATURE	DATE	GROUP
ORIGINATED	KOENING	6-3-76	H7
DRAWN	WIGERTON	9-11-80	E2
CHECKED	RIDLON	6-10-80	H7
PROJ. ENGR.	KOENIG	6-3-76	H7
APPROVED			
RELEASED			

TOLERANCES - (UNLESS OTHERWISE NOTED)
X ± 0 DIM. 0.XX ± 0 DIM. ANGULAR ± 0 DIM.
0.X ± 0 DIM. 0.XXX ± 0 DIM. FRACTIONS ± DIM.

SCALE NONE | TOTAL SHEETS 16 | DRAWING NO. K03Y-223004D15 | SHEET

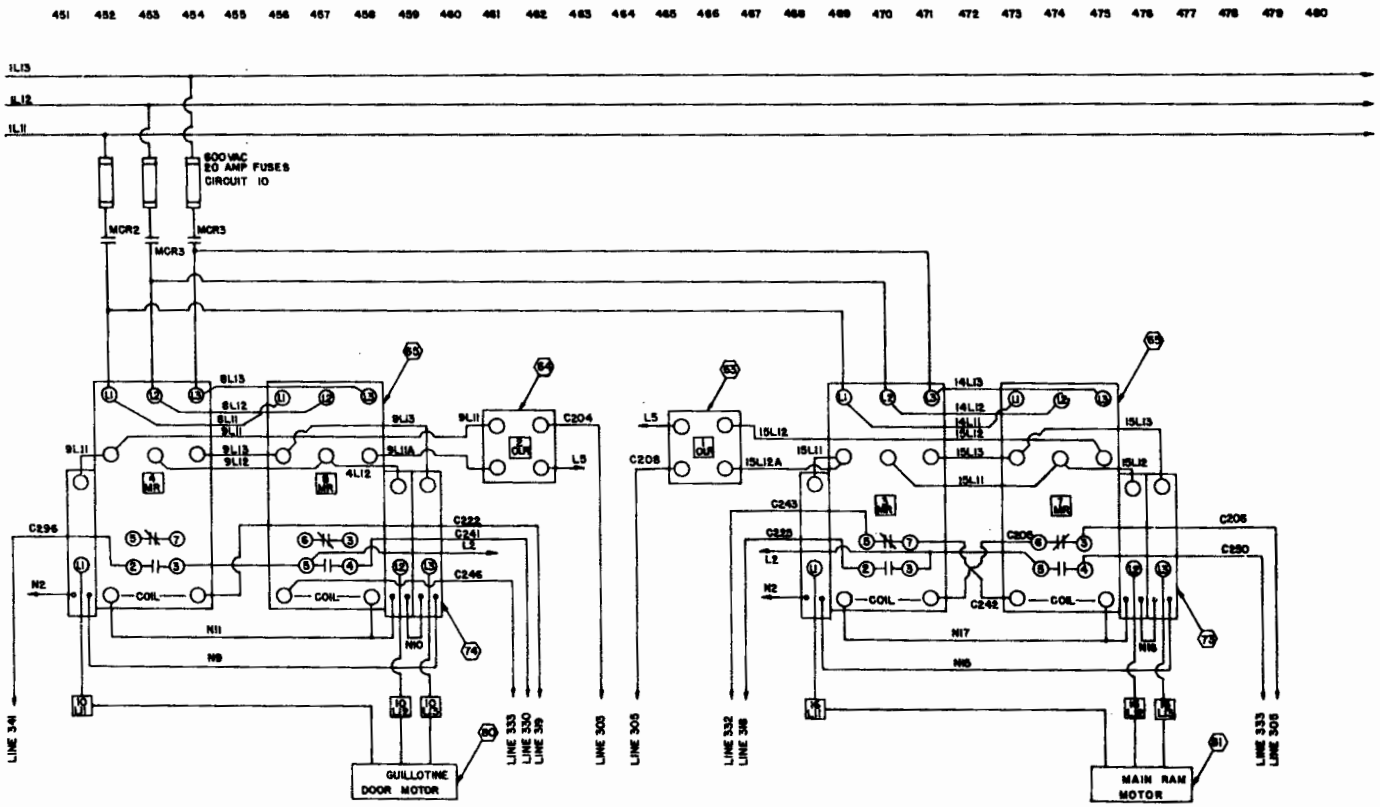

PART NUMBER			PARTS LIST
PROFILE NUMBER	STOCK	SIZE	DESCRIPTION

—	1	ORIGINAL ISSUE	—	—	—	—
REVISION LETTER	CLASS. CHANGE	REVISIONS	DATE	DRAWN BY	CHECKED BY	APPROVED BY

CLASSIFICATION OF DRAWING: UNC

PART: UNC TITLE BLOCK: UNC

TITLE

Combustion Control Rack Wiring Diagram

	SIGNATURE	DATE	GROUP
DESIGNATED	KOENIG	6-3-76	H7
DRAWN	SHORTOR	5-11-80	E2
CHECKED	NOLON	8-19-80	H7
ENGL. CHGS	KOENIG	6-3-76	H7
APPROVED			
RELEASED			

TOLERANCE - (UNLESS OTHERWISE NOTED)

X = ± ___ 0.XX = ± ___ ANGULAR = ± ___

0.X = ± ___ 0.XXX = ± ___ FINISH = ___

SCALE: NONE SHEET: 1 OF 16 DRAWING NO. 103Y-223004D16

PART NUMBER		PARTS LIST
PURPOSE NUMBERS	FIGS	DESCRIPTION

GENERAL NOTES

1. FOR SPECIFICATIONS SEE SPECICIFICATION No. 5104A APPENDIX A.
2. THE WORDS "BOX OR BOXES" USED IN GENERAL NOTES SHALL REFER TO GLOVEBOXES, DROPBOXES, WOODS, HOODED BOXES AND CONNECTOR BOXES.
3. FOR REASONS OF CLARITY, APPURTERANCES AND/OR THE DETAILS OF ASSEMBLIES ARE NOT SHOWN ON ALL VIEWS ON DRAWINGS. HOWEVER, ALL APPURTERANCES AND ASSEMBLIES CALLED FOR ON THE DRAWINGS AND LISTED IN THE BILL OF MATERIAL ARE DETAILED ON REFERENCED DRAWINGS AND SHALL BE FABRICATED AND INSTALLED ON THE BOXES.
4. METHOD OF FABRICATION AND WELDED JOINTS SHOWN ARE SUGGESTED AND MAY BE CHANGED PROVIDED PURCHASER'S SPECIFICATIONS ARE MAINTAINED AND DEVIATIONS ARE APPROVED BY PURCHASER.

GENERAL NOTES - FABRICATION AND FINISH

20. ALL BOXES SHALL BE FABRICATED FROM 3/16" STAINLESS STEEL PLATE TYPE 304L UNLESS NOTED OTHERWISE. STIFFENER BARS, BULKHEADS, BLISTERS, WELLS AND OTHER SPECIFIC STOCK ATTACHED TO THE SHELL SHALL BE TYPE 304L SS OR AS NOTED ON THE DRAWING.
21. ALL FABRICATION SHALL BE OF WELDED CONSTRUCTION, VACUUM TIGHT JOINTS, WITH ALL WELDS BLENDED, GROUND AND POLISHED TO BLEND WITH ADJACENT MATERIAL SPECIFIED. GROUND WELDS SHALL NOT BE THINNER THAN MATERIAL SPECIFIED. THERE SHALL BE NO VISIBLE WARPAGE ADJACENT TO WELDS.
22. EXTERIOR FINISH OF ALL BOXES SHALL BE No. 2B OR BETTER.
23. INTERIOR FINISH OF BOX FLOOR AND FRONT SHALL BE No. 4 AND SHALL BE CONTINUOUS THRU THE CORNER RADII TO THE BEGINNING OF CEILING, SIDEWALLS AND BACKWALL (IF BACKWALL EXISTS). FINISH IN SPECIAL CASES SHALL BE AS NOTED ON THE DRAWINGS.
24. ALL INSIDE RADII AT THE BOX CORNERS SHALL BE 5/8" UNLESS NOTED OR SHOWN OTHERWISE.
25. BREAK ALL SHARP EDGES (.01" - .03" APPROX. RADIUS).
26. FABRICATOR SHALL FURNISH AND INSTALL ONE THREADED PLUG IN EACH THREADED SHELL PENETRATION AND ALL SERVICE PANEL COUPLINGS. PLUGS SHALL BE STAINLESS STEEL (SEE NOTE 27)(150# RATING). WHERE INSIDE THREADS ARE AVAILABLE ON A PENETRATION, THE PLUGS SHALL BE INSTALLED INSIDE THE BOX. PLUGS SHALL HAVE A RECESSED HEX HOLE FOR ALLEN WRENCH.
27. PLUGS AND ANY OTHER STAINLESS STEEL PARTS SHALL BE THE SAME TYPE STAINLESS STEEL AS THE GLOVEBOX TO WHICH THEY ARE ATTACHED.

GENERAL NOTES - TOLERANCES

40. DIMENSIONAL TOLERANCES SHALL NOT BE ACCUMULATIVE.
41. OVERALL SHELL DIMENSIONS SHALL BE HELD TO ±1/16" UNLESS NOTED OTHERWISE.
42. ALL EXTERIOR SURFACES MUST BE FLAT AND TRUE AFTER WELDING TO WITHIN ±1/8" EXCEPT AS NOTED PER NOTE #43.
43. ALL SURFACES AROUND CUTOUTS (1" +1/8"/-0" BEYOND ROUND CUTOUTS AND 3/4" +1/8"/-0" BEYOND SQUARE OR RECTANGULAR CUTOUTS PERIMETRICALLY) MUST BE FLAT WITHIN .015 TOTAL INDICATOR READING TO INSURE GASKET SEALING.
44. FLOORS MUST BE FLAT TO WITHIN ±1/8" EXCEPT AS NOTED. FABRICATOR SHALL OBTAIN PURCHASER'S APPROVAL PRIOR TO ADDITION OF ANY STIFFENERS THAT MAY BE REQUIRED TO STAY WITHIN SPECIFIED TOLERANCE.
45. LOCATING DIMENSIONS OF INDIVIDUAL BOX CUTOUTS SHALL BE HELD TO ±1/16" UNLESS NOTED OTHERWISE.
46. CUTOUT DIMENSIONS SHALL BE HELD TO ±1/64" EXCEPT AS NOTED.
47. GLOVEPORT CUTOUT DIMENSION SHALL BE HELD TO APPROPRIATE TOLERANCE FOR FIT.
48. ALL WELDED OR BOLTED CONNECTING RINGS ASSEMBLED ON BOXES SHALL BE CHECKED FOR TRUECENTERLINE ALIGNMENT. CONNECTING RING FACES SHALL BE PERPENDICULAR TO THE FLOOR OF THE BOX AND IN PLANES AT RIGHT ANGLES TO THE CENTERLINE OF THE CONNECTING RINGS WHERE TWO RINGS ARE ON THE SAME CENTERLINE. THE OVERALL FACE TO FACE DIMENSIONAL VARIANCE SHALL NOT EXCEED 1/32" WHEN MEASURED AT 48" INCREMENTS AROUND THE PERIPHERY OF THE CONNECTING RING FACES.

DETAIL 1 SHEET 2	GLOVEPORT AND SLOPED WINDOW	103Y-223005D2
DETAIL 2 SHEET 2	SERVICE CUTOUT	103Y-223005D2
DETAIL 3 SHEET 2	TOP WINDOW	103Y-223005D2
DETAIL 4 SHEET 2	AIR FILTER CUTOUT	103Y-223005D2
DETAIL 5 SHEET 2	FIRESHIELD MOUNTING STUD	103Y-223005D2
DETAIL 6 SHEET 3	MAGNETIC GAUGE COUPLING	103Y-223005D3
DETAIL 7 SHEET 3	2" COUPLING	103Y-223005D3
DETAIL 8 SHEET 3	GLOVEPORT RING	103Y-223005D3
DETAIL 9 SHEET 3	1" DRAIN COUPLING	103Y-223005D3
DETAIL 10 SHEET 3	FIREDETECTOR HOUSING	103Y-223005D3
DETAIL 11 SHEET 4	GLOVEPORT AND VERTICAL WINDOW	103Y-223005D4
DETAIL 12 SHEET 4	RUNSTRUT	103Y-223005D4
DETAIL 13 SHEET 4	CORNER RADIUS	103Y-223005D4
DETAIL 14 SHEET 7	14.00" DIA CONNECTING RING	103Y-223005D7
DETAIL 15 SHEET 7	CONNECTING RING GASKET	103Y-223005D7
DETAIL 16 SHEET 8	14.75" ID BAGOUT AND COVER	103Y-223005D8
DETAIL 17 SHEET 8	5.00 OD BAGOUT AND COVER	103Y-223005D8
DETAIL 18 SHEET 9	SERVICE PORT COVER	103Y-223005D9
DETAIL 19 SHEET 9	SERVICE PORT GASKET	103Y-223005D9
DETAIL 20 SHEET 10	SUPPORT PLATFORM	103Y-223005D10
DETAIL 21 SHEET 10	BOTTOM WELD STUD DETAIL	103Y-223005D10
DETAIL 22 SHEET 10	LEVELER ASSY	103Y-223005D10

REVISION LETTER	CLASS CHANGE	REVISIONS	DATE	DRAWN	CHECKED	APPROVED
—	FF	ORIGINAL ISSUE	—	—	—	—

Regents of California
LOS ALAMOS SCIENTIFIC LABORATORY
Post Office Box 1663, Los Alamos, New Mexico 87544

	SIGNATURE	DATE	GROUP
DRAFTSMAN	CLAIJFR	2/11/80	H7
DESIGNER	Martinez	2/6/80	62
ENGINEER	Martinez	2/6/80	62
PROJ. ENGR.	Martinez	2/7/80	62
APPROVED	Martinez	2/7/80	H7
RELEASED	A. J. Allen	2-20-80	P-7

CLASSIFICATION OF DRAWING: UNCL.
PART: UNCL. TITLE BLOCK: UNCL.

TITLE
H7-UNSHIELDED GLOVEBOX STANDARD FEATURE DETAILS

TOLERANCES - UNLESS OTHERWISE NOTED
X = ± — DECS = ± .030 ANGULAR = ± 0°30'
X.X = ± — X.XXX = ± .005 FRACS = ± 1/32

SCALE	SHEET SIZE	DRAWING NO.	REVISION
NONE	10	103Y-223005	D 1

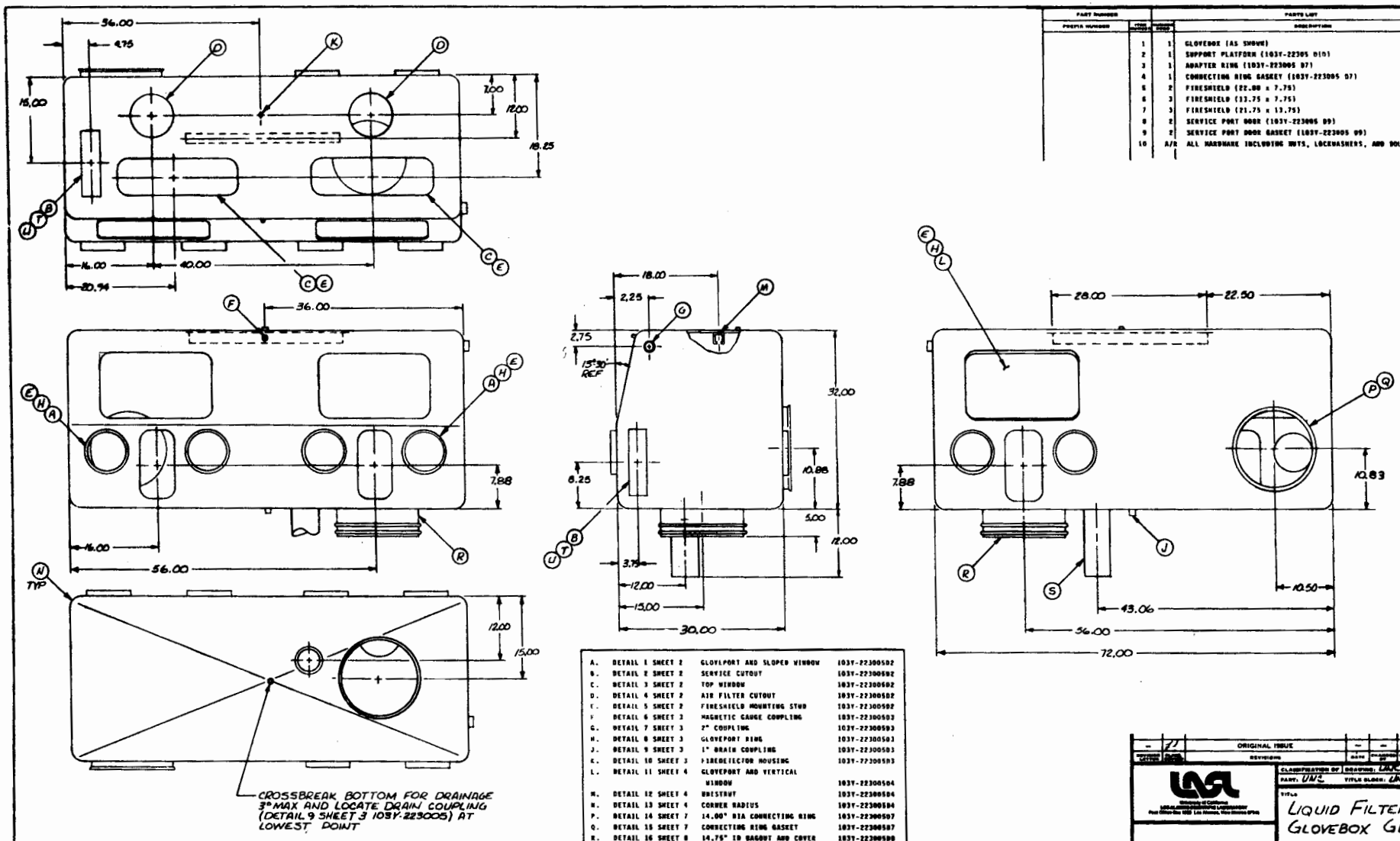

PART NUMBER			PARTS LIST
PREFIX NUMBER	ITEM NUMBER	QTY REQD	DESCRIPTION
	1	1	GLOVEBOX (AS SHOWN)
	2	1	SUPPORT PLATFORM (103Y-223005 D15)
	3	1	ADAPTER RING (103Y-223005 D7)
	4	1	CONNECTING RING GASKET (103Y-223005 D7)
	5	2	FIRESHIELD (22.00 x 7.75)
	6	3	FIRESHIELD (13.75 x 7.75)
	7	3	FIRESHIELD (21.75 x 13.75)
	8	2	SERVICE PORT DOOR (103Y-223005 D9)
	9	2	SERVICE PORT DOOR GASKET (103Y-223005 D9)
	10	A/R	ALL HARDWARE INCLUDING NUTS, LOCKWASHERS, AND BOLTS

A.	DETAIL 1 SHEET 2	GLOVEPORT AND SLOPED WINDOW	103Y-223005D2
B.	DETAIL 2 SHEET 2	SERVICE CUTOUT	103Y-223005D2
C.	DETAIL 3 SHEET 2	TOP WINDOW	103Y-223005D2
D.	DETAIL 4 SHEET 2	AIR FILTER CUTOUT	103Y-223005D2
E.	DETAIL 5 SHEET 2	FIRESHIELD MOUNTING STUD	103Y-223005D2
F.	DETAIL 6 SHEET 3	MAGNETIC GAUGE COUPLING	103Y-223005D3
G.	DETAIL 7 SHEET 3	2" COUPLING	103Y-223005D3
H.	DETAIL 8 SHEET 3	GLOVEPORT RING	103Y-223005D3
J.	DETAIL 9 SHEET 3	1" DRAIN COUPLING	103Y-223005D3
K.	DETAIL 10 SHEET 3	FIREDETECTOR HOUSING	103Y-223005D3
L.	DETAIL 11 SHEET 4	GLOVEPORT AND VERTICAL WINDOW	103Y-223005D4
M.	DETAIL 12 SHEET 4	UNISTRUT	103Y-223005D4
N.	DETAIL 13 SHEET 4	CORNER RADIUS	103Y-223005D4
P.	DETAIL 14 SHEET 7	14.00" DIA CONNECTING RING	103Y-223005D7
Q.	DETAIL 15 SHEET 7	CONNECTING RING GASKET	103Y-223005D7
R.	DETAIL 16 SHEET 8	14.75" ID BAGOUT AND COVER	103Y-223005D8
S.	DETAIL 17 SHEET 8	5.00" OD BAGOUT AND COVER	103Y-223005D8
T.	DETAIL 18 SHEET 9	SERVICE PORT COVER	103Y-223005D9
U.	DETAIL 19 SHEET 9	SERVICE PORT GASKET	103Y-223005D9
V.	DETAIL 20 SHEET 10	SUPPORT PLATFORM	103Y-223005D10
W.	DETAIL 21 SHEET 10	BOTTOM WELD STUD DETAIL	103Y-223005D10
X.	DETAIL 22 SHEET 10	LEVELER ASSY	103Y-223005D10

REVISION LETTER	REVISION NUMBER	REVISIONS	DATE	APPROVED BY	CHECKED BY	DRAWN BY
—	77	ORIGINAL ISSUE	—	—	—	—

LOCKHEED MISSILES & SPACE COMPANY
Post Office Box 504 Sunnyvale, California

CLASSIFICATION OF DRAWING: UNC.
PARTS: UNC. TITLE BLOCK: UNC.

TITLE
LIQUID FILTER GLOVEBOX GB-242

	SIGNATURE	DATE	COMPANY
DESIGNER	GLA/JFR	12/14/80	H7
DRAWN	MORTON	3/3/80	E2
CHECKED	Moorhead	7/5/80	E2
ANAL. CHECK	MORTON	7/15/80	E2
APPROVED	Moorhead	3/3/80	H7
RELEASED	[illegible]	7-30-80	H-7

TOLERANCE - Fractions ±1/64 Decimals ±.010 Angular ±0°30'
X = ± — 0.XX ± .010 0.XXX ± .005 FINISH — 32

SCALE 1-8 TOTAL SHEETS 1 SHEET NO. 1 103Y 223005 D1

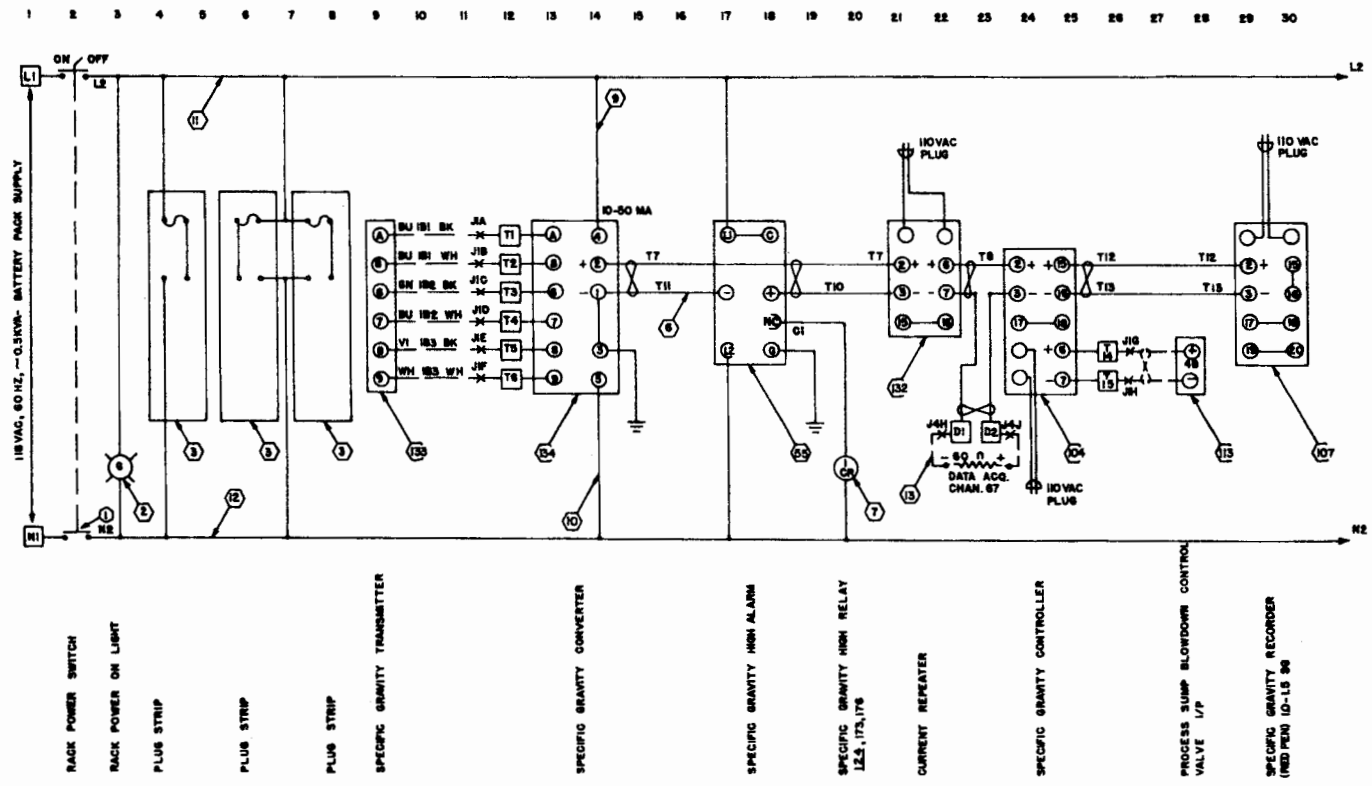

PART NUMBER		PARTS LIST	
PARTS NUMBER	STOCK CODE	NUMBER REQD	DESCRIPTION

–		ORIGINAL ISSUE	–	–	–	–	–
REVISED LETTER	REVISED BY	REVISIONS	DATE	ENGINEER BY	CHECKED BY	APPROVED BY

University of California
LOS ALAMOS SCIENTIFIC LABORATORY
Post Office Box 1663 Los Alamos, New Mexico 87544

CLASSIFICATION OF DRAWING: UNC
PART: UNC TITLE BLOCK: UNC

TITLE
Filter Control Rack #1
Wiring Diagram

	SIGNATURE	DATE	GROUP
DESIGNED FOR	KOENIG	6-3-76	H7
DRAWN	KIRCHTON	4-6-80	E2
CHECKED	RIDLON	8-18-80	H7
PROJ. ENGR.	KOENIG	6-3-76	H7
APPROVED		3/9/82	H7
RELEASED		2/26/82	H7

TOLERANCES - UNLESS OTHERWISE NOTED
X = ± ___ 0.XX = ± ___ ANGULAR = ± ___
0.XXX = ± ___ 0.XXXX = ± ___ FINISH - ___

SCALE	SHEET	DRAWING NO.	SHEET
NONE	7	103Y-223007D1	

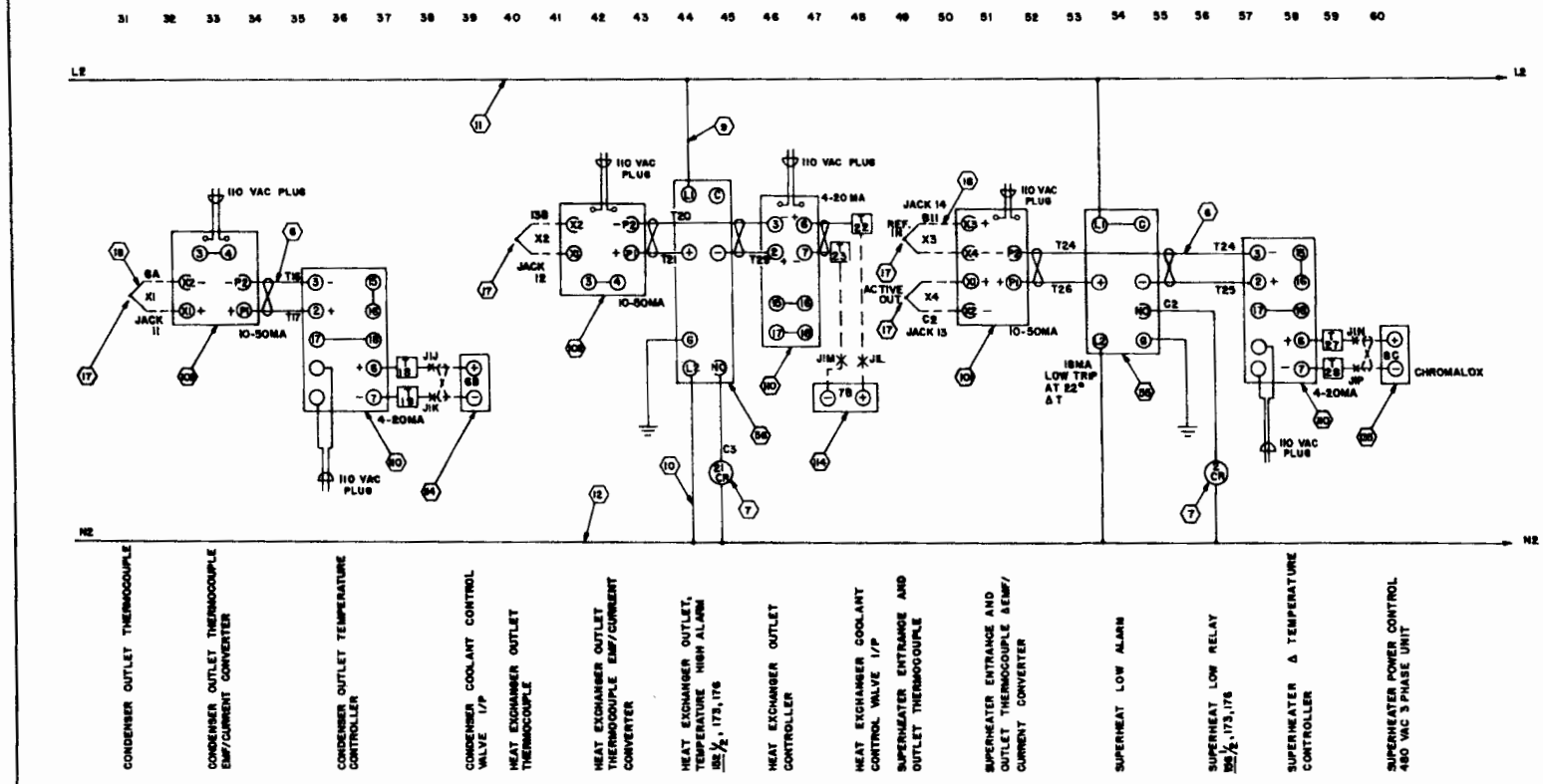

PART NUMBER			PARTS LIST
PREFIX NUMBER	ITEM NUMBER	SUFFIX NUMBER	DESCRIPTION

REVISION LETTER	ZONE LETTER	REVISIONS	DATE	CHANGED BY	CHECKED BY	APPROVED BY
–	(A)	ORIGINAL ISSUE	–	–	–	–

CLASSIFICATION OF DRAWING UNC

PART UNC TITLE BLOCK UNC

TITLE

Filter Control Rack #1 Wiring Digram

	SIGNATURE	DATE	GROUP
DRAFTSMAN	KOENIG	6-5-78	H7
DRAWN	WHORTON	4-11-80	E2
CHECKED	RIDLON	6-16-80	H7
PROJ. ENGR.	KOENIG	6-2-78	H7
APPROVED			
REGULATORY			

TOLERANCE - UNLESS OTHERWISE NOTED

X = ± ___ 0.XX = ± ___ ANGULAR = ± ___

0.X = ± ___ 0.XXX = ± ___ FINISH - ___

SCALE NONE | TOTAL SHEETS 7 | DRAWING NO. 103Y-223007D2 | SHEET

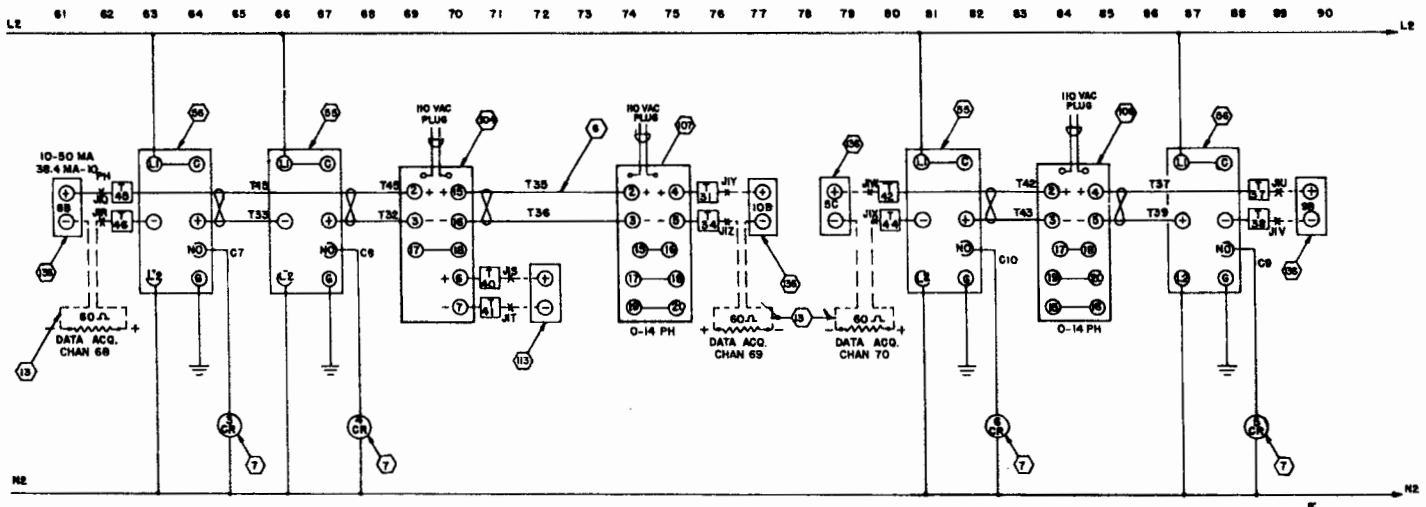

PROCESS SUMP PH OUT TRANSMITTER

PROCESS SUMP PH OUT HIGH ALARM

PROCESS SUMP PH OUT HIGH RELAY 122

PROCESS SUMP PH OUT LOW ALARM

PROCESS SUMP PH OUT LOW RELAY 124, 176

PROCESS SUMP PH OUT CONTROLLER

PROCESS SUMP CAUSTIC FLOW CONTROL VALVE I/P

PROCESS SUMP PH OUT RECORDER (RED PEN)

PROCESS SUMP PH IN RECORDER (GREEN PEN)

PROCESS SUMP PH IN TRANSMITTER

CONDENSER SUMP PH TRANSMITTER

CONDENSER SUMP PH LOW ALARM

CONDENSER SUMP PH LOW RELAY 128 1/2, 177

CONDENSER SUMP PH RECORDER (RED PEN)

BUILDING SUMP PH RECORDER (GREEN PEN)

BUILDING SUMP PH LOW ALARM

BUILDING SUMP PH LOW RELAY 184 1/2, 176

BUILDING SUMP PH TRANSMITTER

PART NUMBER		PARTS LIST
PRINTED NUMBER	USED ON	DESCRIPTION

—		ORIGINAL ISSUE	—	—	—
REVISION LETTER	REVISION NUMBER	REVISIONS	DATE	CHANGED BY	CHECKED BY	APPROVED BY

Regents of California
LOS ALAMOS SCIENTIFIC LABORATORY
Post Office Box 1663 Los Alamos, New Mexico 87544

CLASSIFICATION OF DRAWING: UNC

PART: UNC TITLE BLOCK: UNC

TITLE

Filter Control Rack #1 Wiring Diagram

	SIGNATURE	DATE	GROUP
DRAWN BY	KOENIG	8-2-78	H7
CHECKED	MORTON	4-3-80	E2
APPROVED	RIDLON	8-18-80	H7
FINAL APPROVAL	KOENIG	8-2-78	H7
APPROVED	[illegible]	[illegible]	H7
PUBLISHED	[illegible]	[illegible]	H7

TOLERANCE - (UNLESS OTHERWISE NOTED)

X = ± ___ 0.XX = ± ___ ANGULAR = ± ___

0.X = ± ___ 0.XXX = ± ___ FRACT. = ± ___

SCALE: NONE | TOTAL SHEETS: 7 | DRAWING NO. 103Y-223007D3 | SHEET

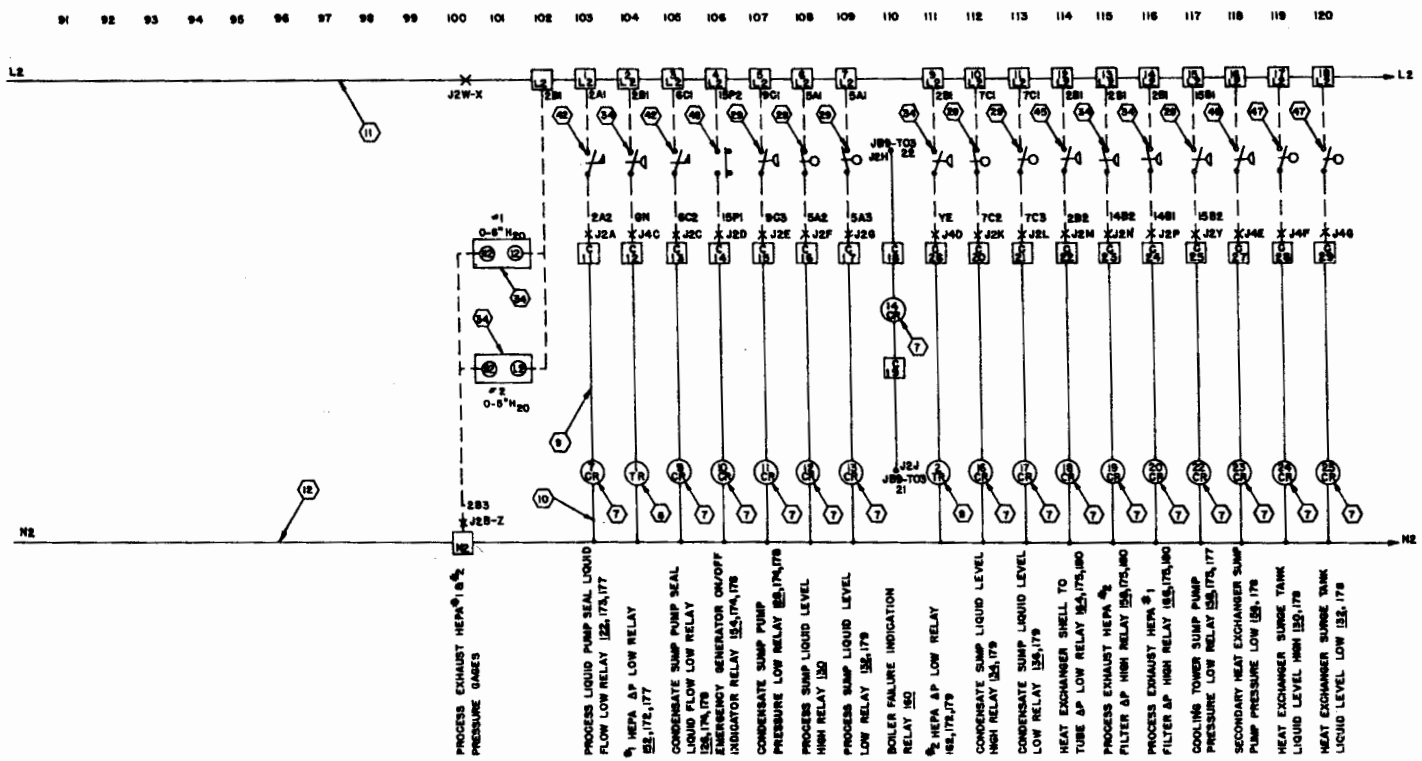

PART NUMBER		PARTS LIST	
PEOPLE NUMBER	ITEM	QUANTITY	DESCRIPTION

—	1A	ORIGINAL ISSUE	—	—	—	—
REVISION LETTER	REVISION NUMBER	REVISIONS	DATE	CHECKED BY	DRAWN BY	APPROVED BY

University of California
LOS ALAMOS SCIENTIFIC LABORATORY
Post Office Box 1663 Los Alamos, New Mexico 87544

CLASSIFICATION OF DRAWING: UNC
PART: UNC TITLE BLOCK: UNC

TITLE
Filter Control Rack #1 Wiring Diagram

	SIGNATURE	DATE	GROUP
DRAWN BY	HOENIG	8-8-76	H7
CHECKED	SHORTON	4-8-80	E2
APPROVED	RIDLON	8-18-80	H7
PROJ. ENGR.	KOENIG	8-8-76	H7
APPROVED	[illegible]	2-14-81	H7
RELEASED	[illegible]	2-26-81	H7

TOLERANCE - (UNLESS OTHERWISE NOTED)
X ± ___ 0.XX ± ___ ANGULAR ± ___
0.X ± ___ 0.XXX ± ___ FINISH ___

SCALE: NONE | SHEET NUMBER: 7 | DRAWING NO. 103Y-223007D4

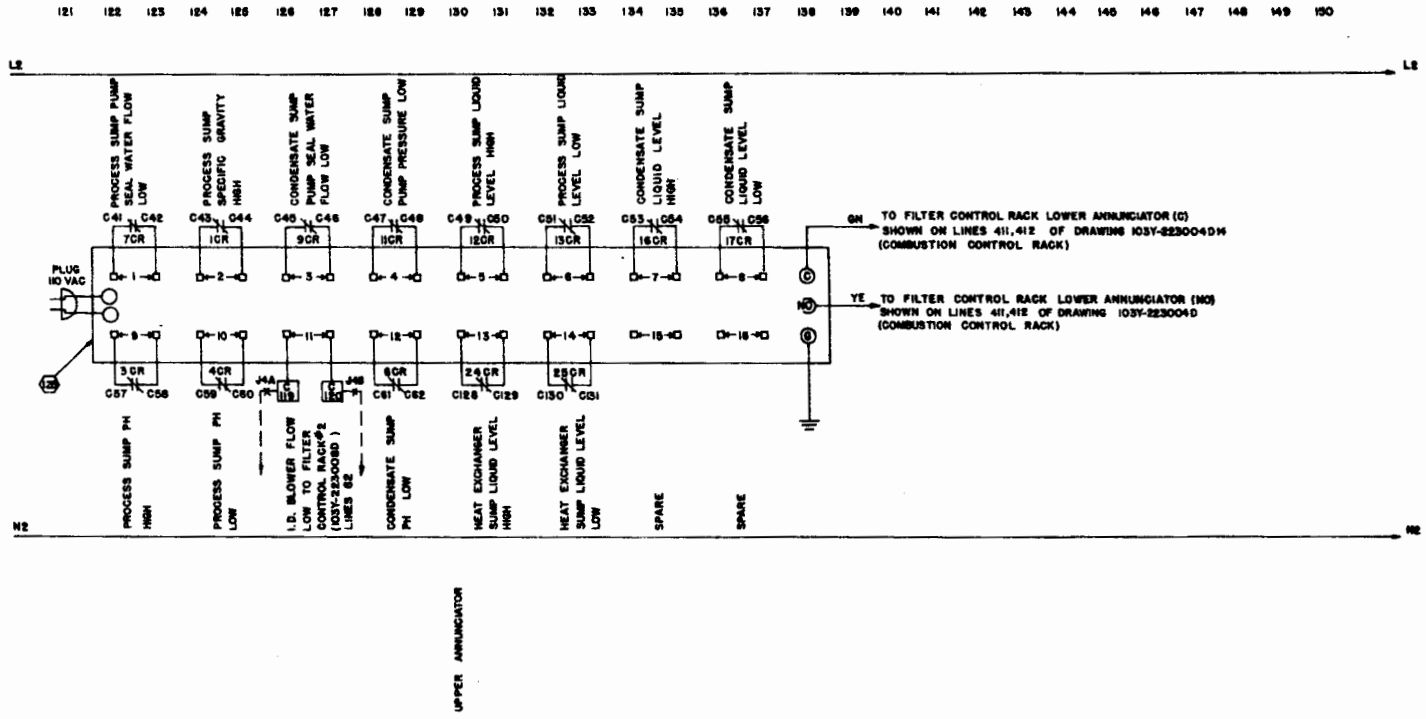

PART NUMBER			PARTS LIST
PARTS NUMBER	TYPE	QUANT	DESCRIPTION

—		ORIGINAL ISSUE	—	—	—
REVISION		REVISIONS	DATE	DRAWN BY	CHECKED BY

CLASSIFICATION OF DRAWING: UNC

PART: UNC TITLE BLOCK: UNC

TITLE

Filter Control Rack #1 Wiring Diagram

	SIGNATURE	DATE	GROUP
ENGINEERING	KOENIG	8-8-78	H7
DRAWING	MORTON	4-2-80	E2
CHECKED	MOLOE	8-8-80	H7
PROJ. ENGR	KOENIG	8-8-80	H7
APPROVED			
PROJECT			

TOLERANCE - (UNLESS OTHERWISE NOTED)

SCALE: NONE SHEET: 7 DRAWING NO. 103Y-223007D5

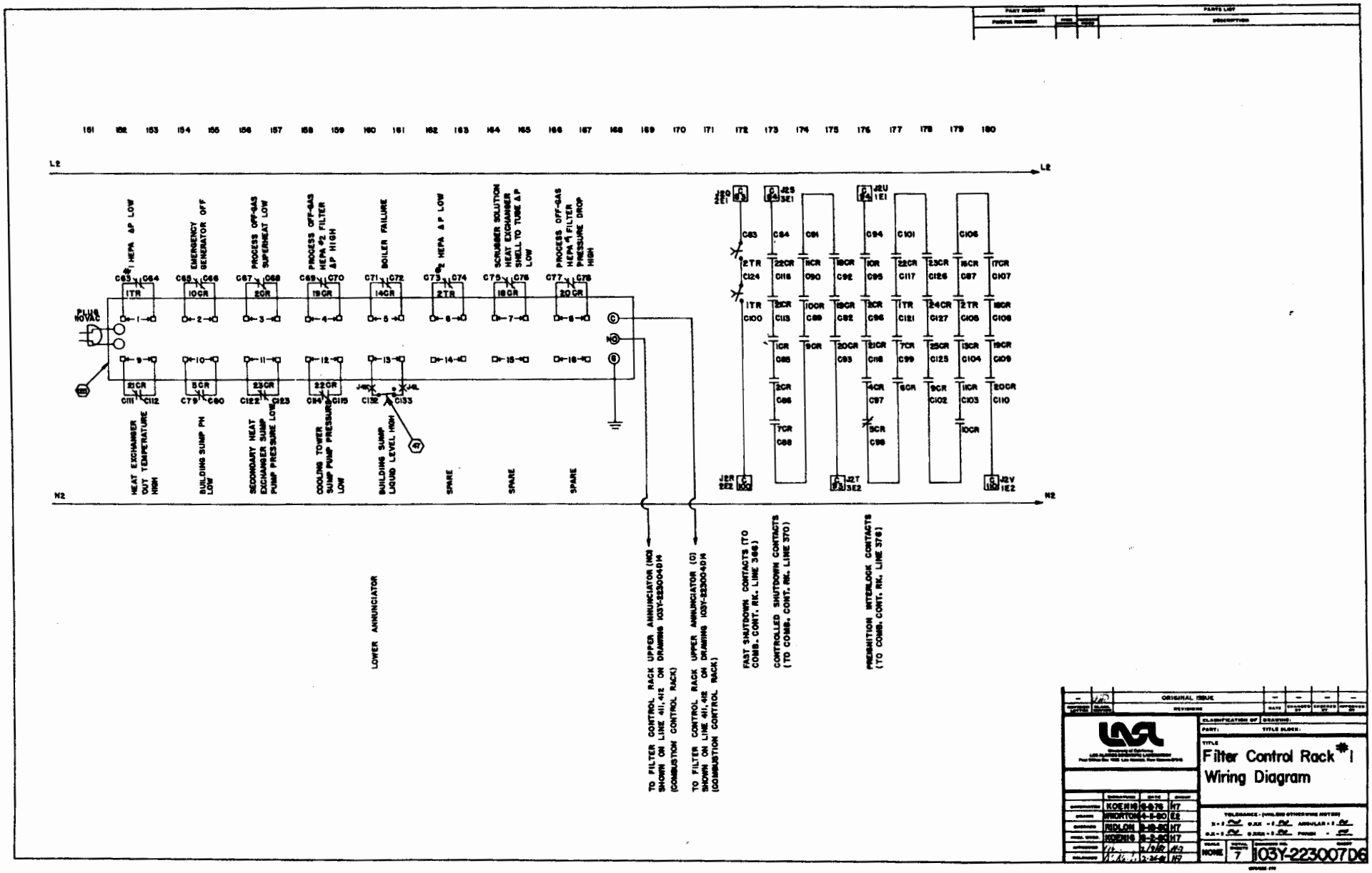
L2
N2
HEPA ΔP LOW
EMERGENCY GENERATOR OFF
PROCESS OFF-GAS SUPERHEAT LOW
PROCESS OFF-GAS HEPA #2 FILTER ΔP HIGH
BOILER FAILURE
HEPA ΔP LOW
SCRUBBER SOLUTION HEAT EXCHANGER SHELL TO TUBE ΔP LOW
PROCESS OFF-GAS HEPA #1 FILTER PRESSURE DROP HIGH
HEAT EXCHANGER OUT TEMPERATURE HIGH
BUILDING SUMP PH LOW
SECONDARY HEAT EXCHANGER SUMP PUMP PRESSURE LOW
COOLING TOWER SUMP PUMP PRESSURE LOW
BUILDING SUMP LIQUID LEVEL HIGH
SPARE
SPARE
SPARE
LOWER ANNUNCIATOR
TO FILTER CONTROL RACK UPPER ANNUNCIATOR (NO) SHOWN ON LINE 411,412 ON DRAWING 103Y-223004D14 (COMBUSTION CONTROL RACK)
TO FILTER CONTROL RACK UPPER ANNUNCIATOR (C) SHOWN ON LINE 411,412 ON DRAWING 103Y-223004D14 (COMBUSTION CONTROL RACK)
FAST SHUTDOWN CONTACTS (TO COMB. CONT. RK. LINE 366)
CONTROLLED SHUTDOWN CONTACTS (TO COMB. CONT. RK. LINE 370)
PREIGNITION INTERLOCK CONTACTS (TO COMB. CONT. RK. LINE 376)
ORIGINAL ISSUE
Filter Control Rack #1
Wiring Diagram
KOENIG
WORTON
RIDLON
KOENIG
NONE
7
103Y-223007D6

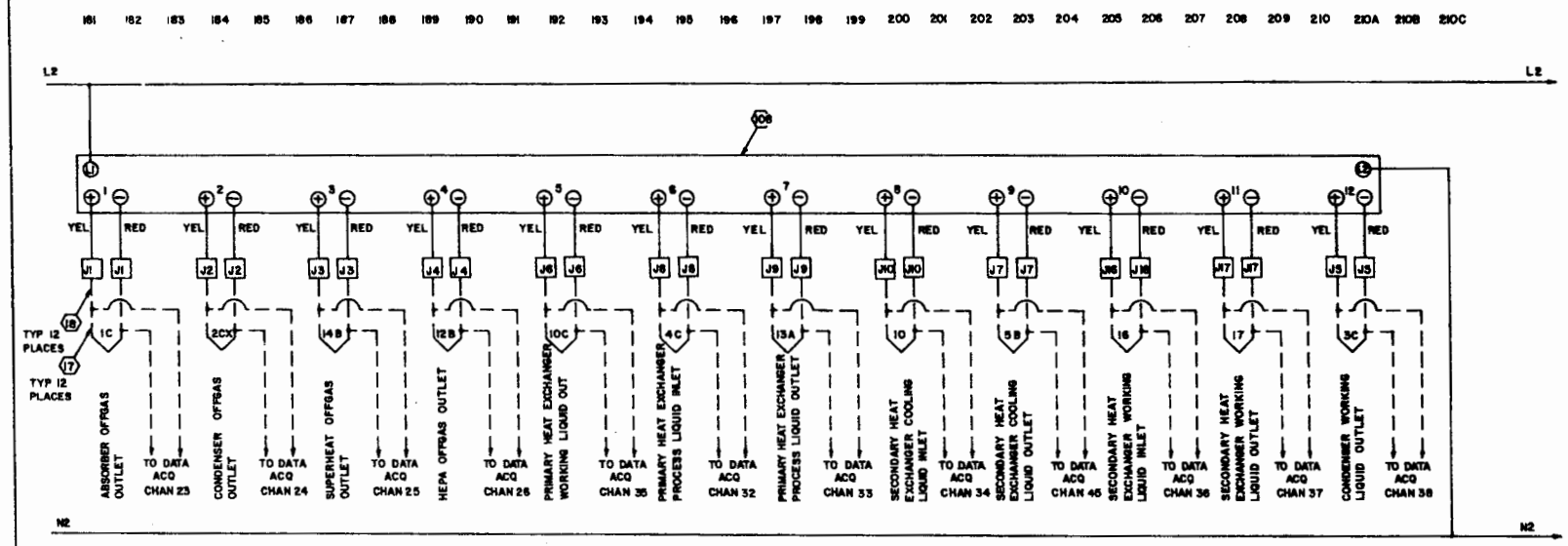

MULTIPOINT TEMPERATURE RECORDER
0-300° F

PART NUMBER		PARTS LIST	
PREFIX NUMBER	TYPE NUMBER	QUANTITY	DESCRIPTION

REVISION LETTER	ECN NUMBER	REVISIONS	DATE	DRAWN BY	DESIGNED BY	APPROVED BY
–	(A)	ORIGINAL ISSUE	–	–	–	–

University of California
LOS ALAMOS SCIENTIFIC LABORATORY
Post Office Box 1663 Los Alamos, New Mexico 87544

CLASSIFICATION OF DRAWING: UNC
PART: UNC TITLE BLOCK: UNC

TITLE
Filter Control Rack #1
Wiring Diagram

	DESIGNATION	DATE	GROUP
DRAFTSMAN	KOENIG	8-3-76	H7
DRAWN	Wharton	4-5-80	E2
DESIGNED	NOLON	8-15-80	H7
FINAL DRAW.	KOENIG	8-3-76	H7
APPROVED	[illegible]	2/7/80	A-7
RELEASED	[illegible]	8-26-80	H7

TOLERANCE - UNLESS OTHERWISE NOTED
X ± 1 — 0.XX ± 1 — ANGULAR ± 1
0.X ± 1 — 0.XXX ± 1 — FINISH

SCALE NONE | TOTAL SHEETS 7 | DRAWING NO. 103Y-223007-D7 | SHEET

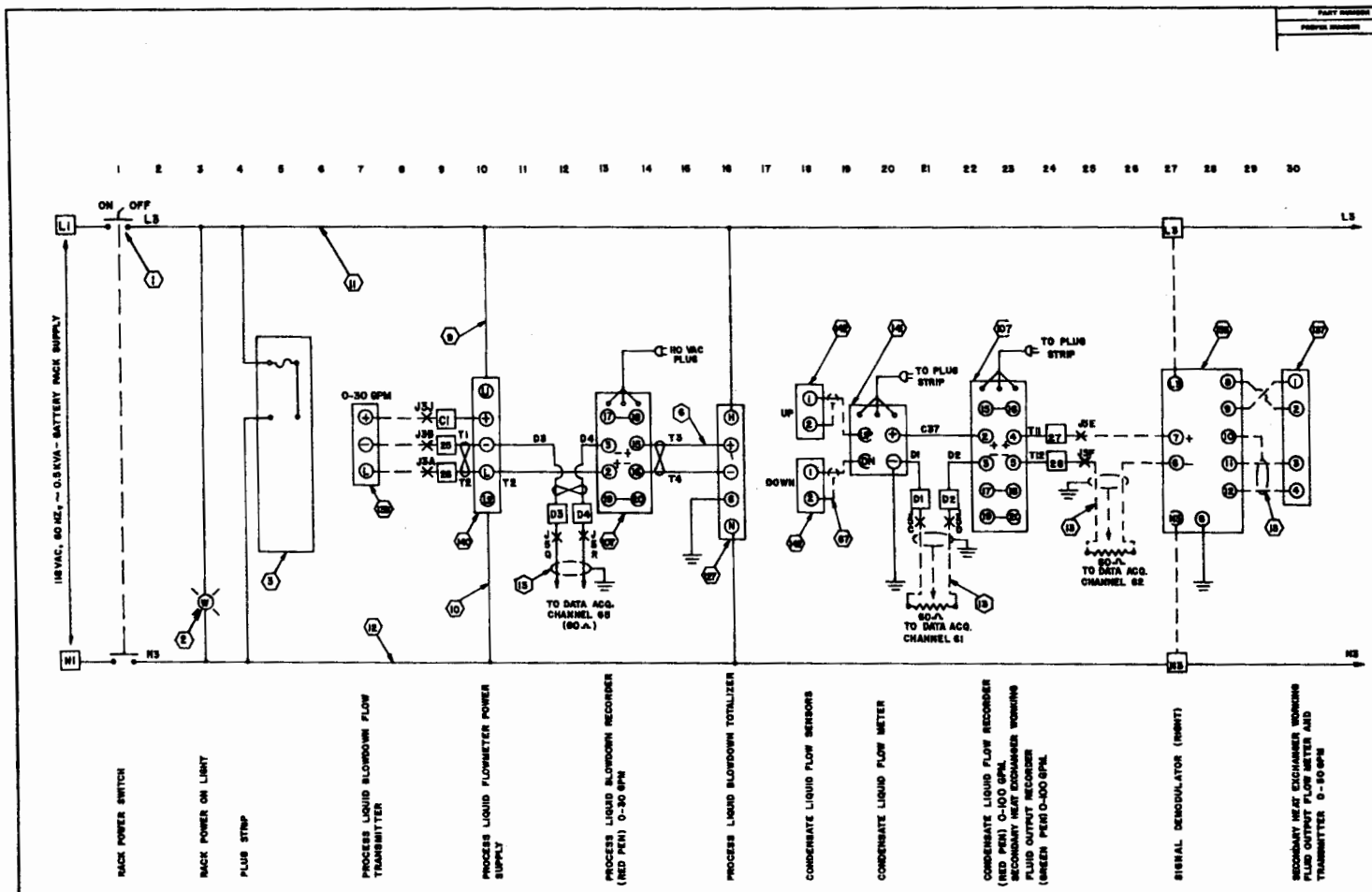

PART NUMBER			PARTS LIST	
PARTIAL NUMBER	TYPE	SIZE		DESCRIPTION

—		ORIGINAL ISSUE	—	—
		REVISIONS	DATE	—

CLASSIFICATION OF DRAWING: UNC

PART: UNC TITLE BLOCK: UNC

TITLE

Filter Control Rack 2

Wiring Diagram

	SIGNATURE	DATE	GROUP
DESIGNED	RDEJING	8-8-78	H7
DRAWN	Wherling	8-22-80	E2
CHECKED	RDLDN	8-18-80	H7
PROJ. ENGR.	RDEJING	8-8-78	H7
APPROVED		1/24/81	H-7
APPROVED		2-26-81	H7

TOLERANCE - UNLESS OTHERWISE NOTED

X = ± ±.0 0.XX = ± ±.0 ANGULAR = ± ±.0

0.X = ± ±.0 0.XXX = ± ±.0 FRACT = ± ±.0

SCALE	TOTAL SHEETS	DRAWING NO.	SHEET
NONE	5	103Y-223008 D1	

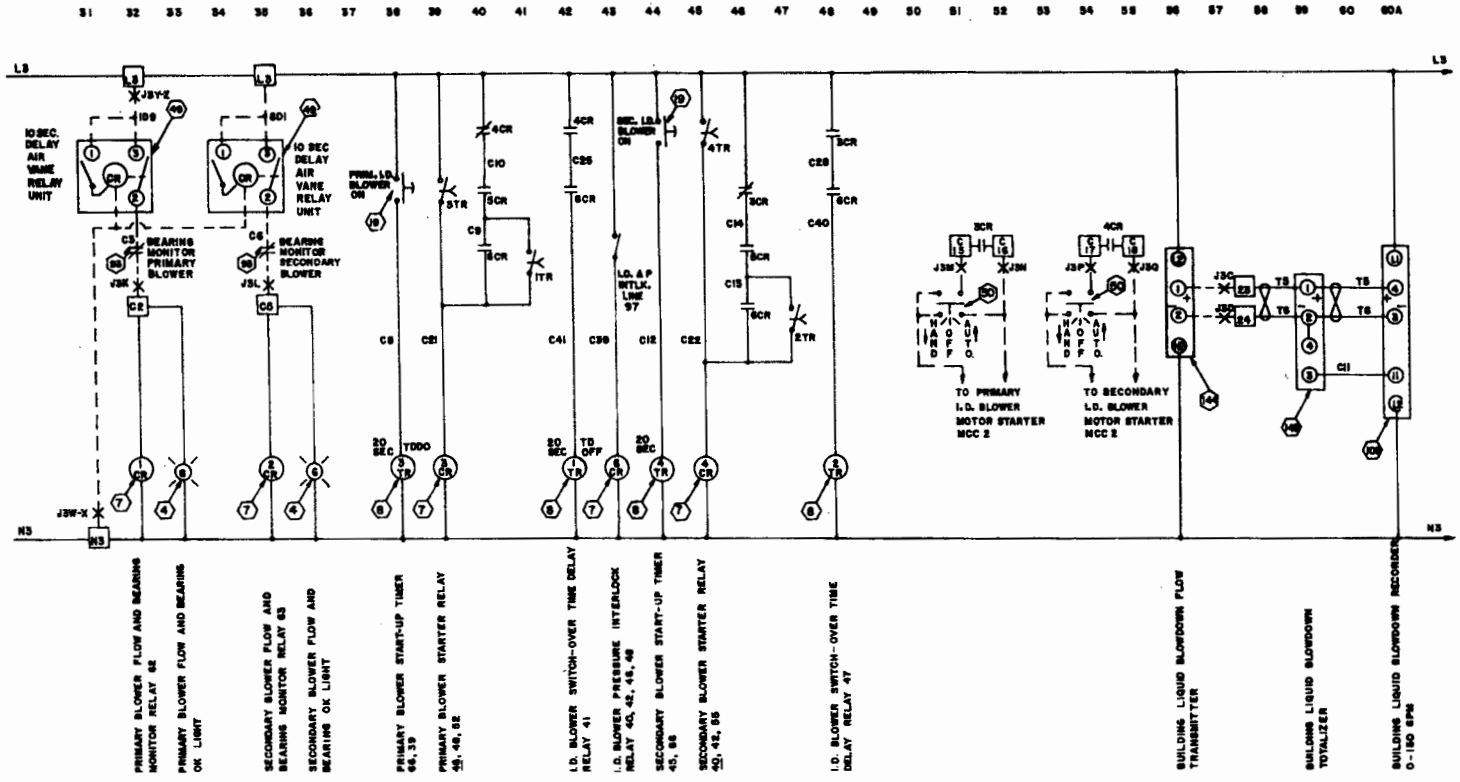

PART NUMBER	PARTS LIST	
PREFIX NUMBER	DESCRIPTION	

ORIGINAL ISSUE

REVISIONS

CLASSIFICATION OF DRAWING: UNC

PART: UNC TITLE BLOCK: UNC

University of California
LOS ALAMOS SCIENTIFIC LABORATORY
Post Office Box 1663 Los Alamos, New Mexico 87545

TITLE
Filter Control Rack 2
Wiring Diagram

	SIGNATURE	DATE	GROUP
DESIGNATOR	HOENIG	9-3-79	H7
DRAWN	O'Marion	4-22-80	E2
CHECKED	RIDLON	9-10-80	H7
FINAL CHECK	HOENIG	9-3-79	H7
APPROVED			
RELEASED			

TOLERANCE - UNLESS OTHERWISE NOTED
X = ± ___ .XX = ± ___ ANGULAR = ± ___
.X = ± ___ .XXX = ± ___ FINISH = ___

SCALE NONE | TOTAL SHEETS 5 | DRAWING NO. 103Y-223008D2

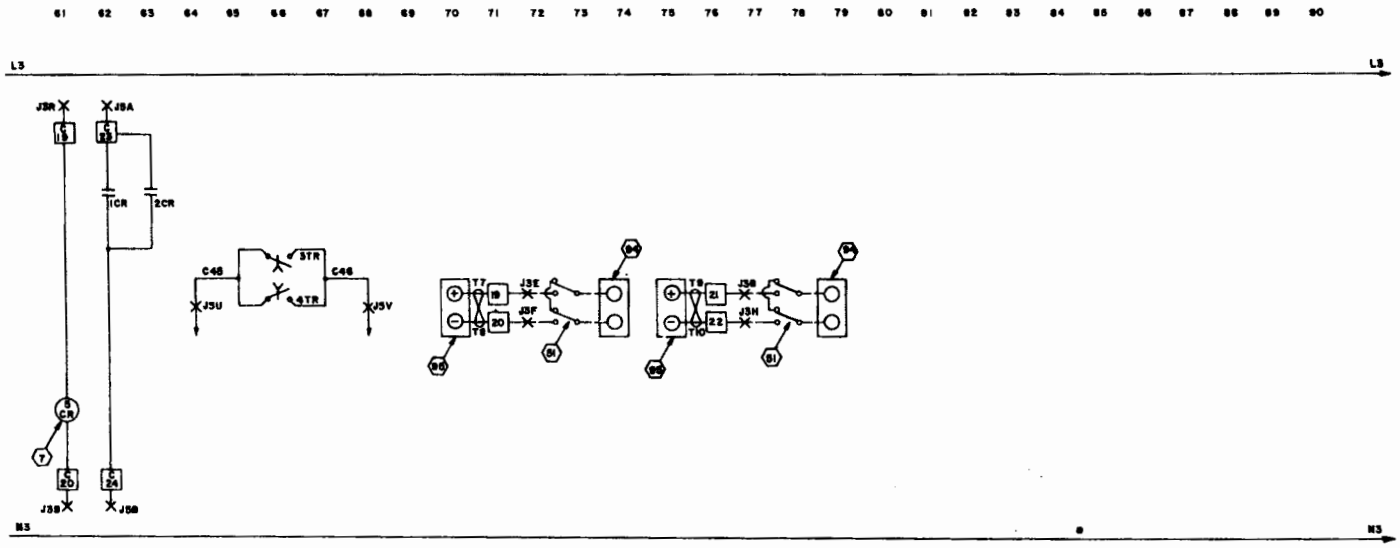

FAST SHUTDOWN RELAY (FROM COMB. CONT. RACK, LINE 347) 40, 46

I.D. BLOWER FLOW LOW ANNUNCIATOR FILTER CONTROL RACK 1 LINE 125

FAST SHUTDOWN INTERLOCK CHAIN TO COMB. CONT. RACK, LINE 364

PRIMARY I.D. BLOWER FLOW INDICATOR (CALIBRATED AMMETER)

TRANSFORMER (FROM ONE LEG OF PRIMARY I.D. BLOWER MOTOR)

SECONDARY I.D. BLOWER FLOW INDICATOR (CALIBRATED AMMETER)

TRANSFORMER (FROM ONE LEG OF SECONDARY I.D. BLOWER MOTOR)

PART NUMBER		PARTS LIST
PREFIX NUMBER	FROM	DESCRIPTION

REVISION LETTER	ELEC. REVISION	REVISIONS	DATE	DRAWN BY	CHECKED BY	APPROVED BY
—	A	ORIGINAL ISSUE	—	—	—	—

University of California
LOS ALAMOS SCIENTIFIC LABORATORY
Post Office Box 1663 Los Alamos New Mexico 87544

CLASSIFICATION OF DRAWING: UNC

PART: UNC TITLE BLOCK: UNC

TITLE
Filter Control Rack 2
Wiring Diagram

	SIGNATURE	DATE	GROUP
DRAFTER	KOENIG	6-2-76	H7
DRAWN	Wharton	4-22-80	E2
DESIGNED	NOLON	4-18-80	H7
ELEC. ENGR.	KOENIG	6-2-76	H7
APPROVED	[illegible]	[illegible]	H7
RELEASED	[illegible]	2-26-81	H7

TOLERANCE - (UNLESS OTHERWISE NOTED)
X = ± ___ .XX = ± ___ ANGULAR = ± ___
.XX = ± ___ .XXX = ± ___ FINISH = ___

PAGE	TOTAL SHEETS	DRAWING NO.	GROUP
NONE	5	103Y-223008D3	

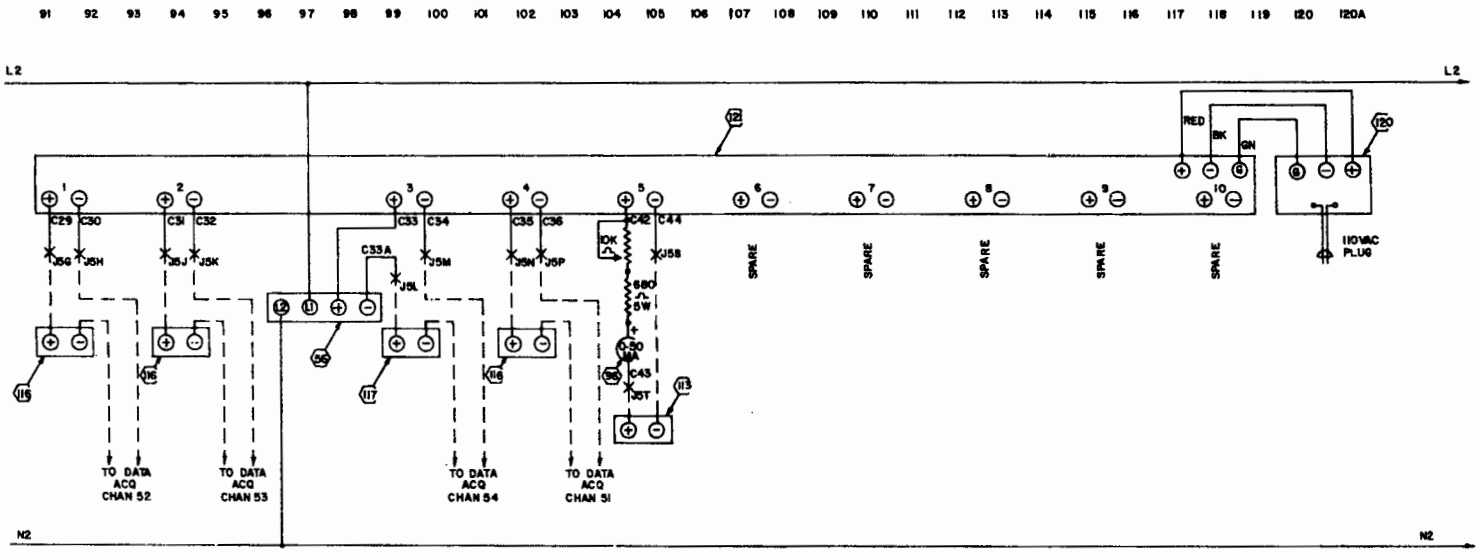

PART NUMBER			PARTS LIST
PREFIX NUMBER	ITEM NUMBER	REQUIRED PER UNIT	DESCRIPTION

REVISION LETTER	ECN NUMBER	REVISIONS	DATE	DRAWN BY	CHECKED BY	APPROVED BY
—	(N)	ORIGINAL ISSUE	—	—	—	—

Regents of California
LOS ALAMOS SCIENTIFIC LABORATORY
Post Office Box 1663 Los Alamos, New Mexico 87544

CLASSIFICATION OF DRAWING: UNC
PART: UNC TITLE BLOCK: UNC

TITLE
Filter Control Rack #2
Wiring Diagram

	SIGNATURE	DATE	GROUP
DRAFTING	KOENIG	6-5-76	H7
DESIGN	Wharton	4-5-80	E2
SUPERVISOR	REDLON	6-10-80	H7
FINAL CHECK	KOENIG	6-2-76	H7
APPROVED			
RELEASED			

TOLERANCE - (UNLESS OTHERWISE NOTED)
X = ± ___ 0.XX = ± ___ ANGULAR = ± ___
0.XXX = ± ___ 0.XXXX = ± ___ FINISH ___

SCALE	TOTAL SHEETS	DRAWING NO.	SHEET
NONE	5	103Y-223008D	4

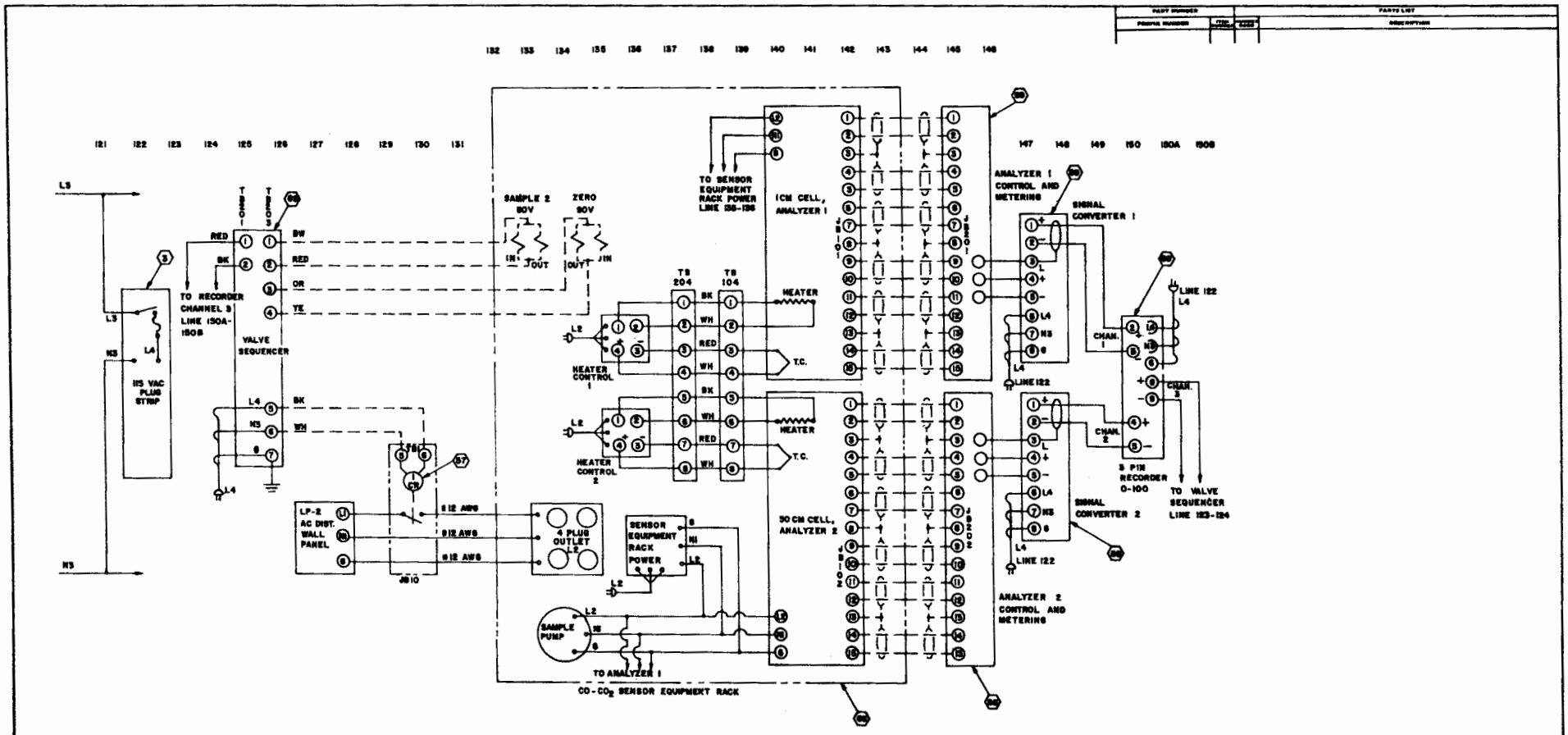

PART NUMBER			PARTS LIST
PREFIX NUMBER	TYPE	SUFFIX	DESCRIPTION

REVISIONS						
—		ORIGINAL ISSUE	—	—	—	—

CLASSIFICATION OF DRAWING: UNC
PART: UNC TITLE BLOCK: UNC

TITLE
Filter Control Rack 2
Wiring Diagram

	SIGNATURE	DATE	GROUP
DESIGNED	ROENIG	8-8-78	H7
DRAWN	Wiarke	8-29-80	E2
CHECKED	PIDLON	8-29-80	H7
FINAL CHECK	ROENIG	8-8-78	H7
APPROVED		7/9/81	H7
RELEASED		2-24-81	H7

TOLERANCE - UNLESS OTHERWISE NOTED
X = ± .___ 0.XX = ± .01 ANGULAR = ± .5°
0.XX = ± .___ 0.XXX = ± .___ FINISH = .___

SCALE	SHEET	DRAWING NO.	GROUP
NONE	5	103Y-223008D5	

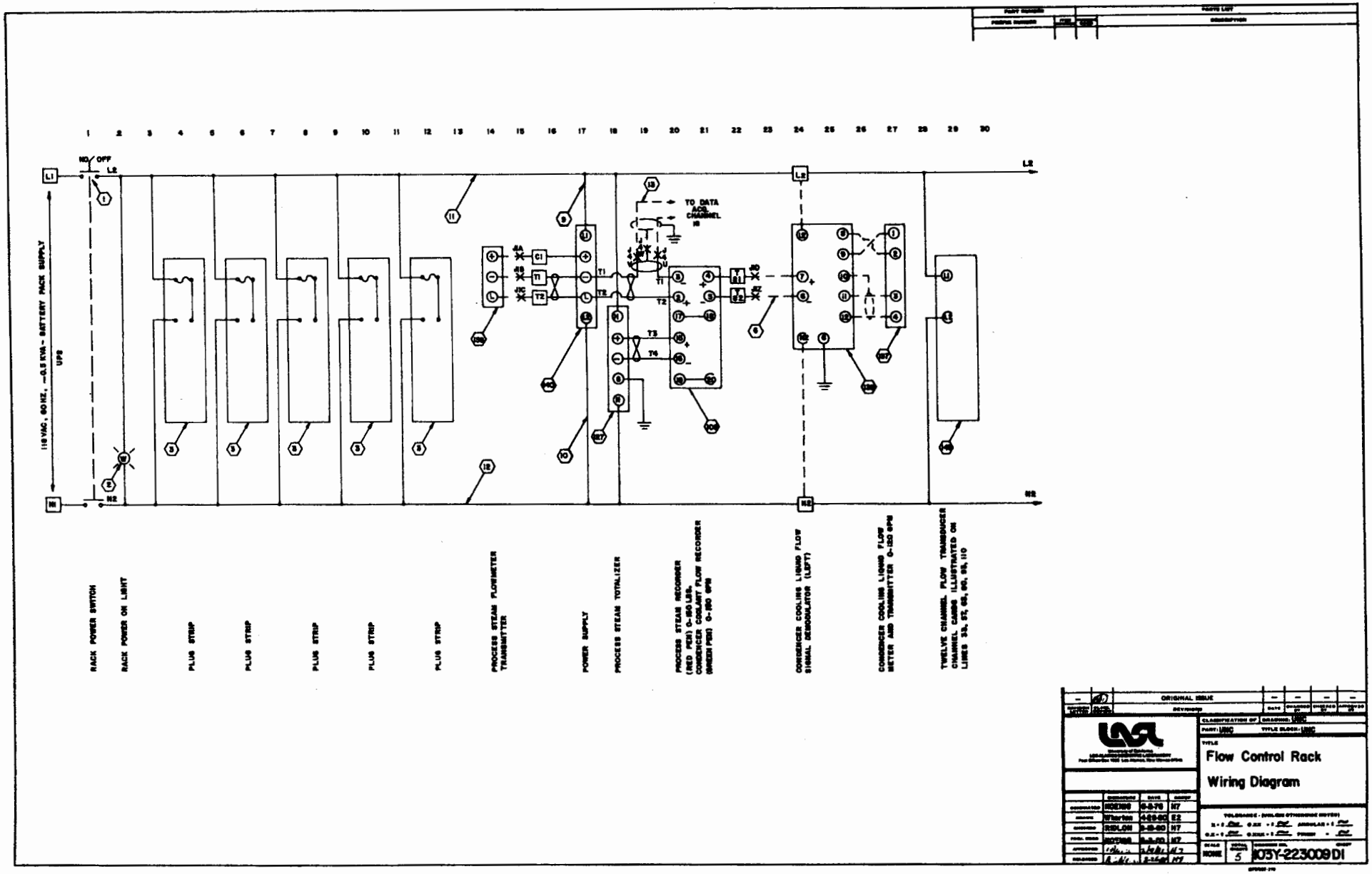

PART NUMBER			PARTS LIST
PARTS NUMBER	FUNC	SUBC	DESCRIPTION

ORIGINAL ISSUE

REVISIONS

CLASSIFICATION OF DRAWING: UNC

PART: UNC TITLE BLOCK: UNC

TITLE

Flow Control Rack Wiring Diagram

	SIGNATURE	DATE	GROUP
DRAWN BY	HOERNE	6-8-76	H7
DESIGN	Wharton	4-29-80	E2
APPROVED	RIDLON	5-15-80	H7
FUNCTIONAL DESIGN	HOERNE	5-5-80	H7
APPROVED	[illegible]	5/16/80	H7
RELEASED	[illegible]	5-16-80	H7

TOLERANCE - UNLESS OTHERWISE NOTED

X = ± .0625 ANGULAR = ± 1°

X.X = ± .030 X.XXX = ± .010 FINISH = .001

SCALE NONE SHEET 5 DRAWING NO. 105Y-223009DI GROUP

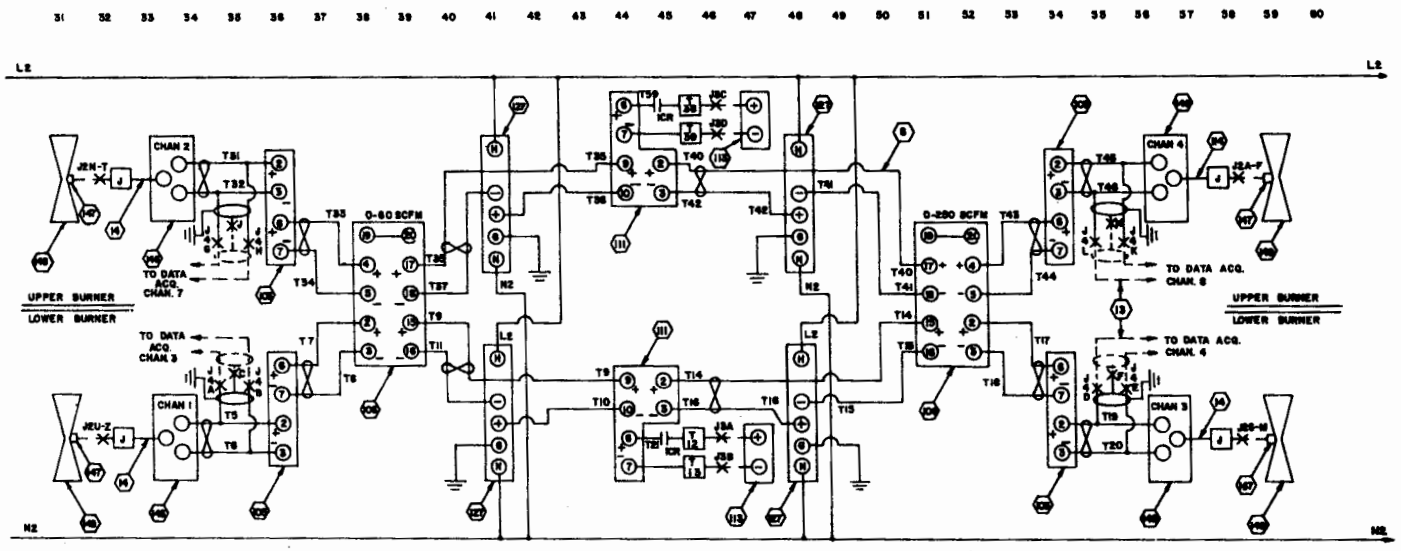

BURNER FUEL GAS MASS FLOW TRANSDUCER & SENSOR

BURNER FUEL GAS MASS FLOW TRANSDUCER ELECTRONICS MODULE

BURNER FUEL GAS FLOW, VOLTAGE TO CURRENT CONVERTER

UPPER BURNER FUEL GAS FLOW RECORDER (GREEN PEN)

LOWER BURNER FUEL GAS FLOW RECORDER (RED PEN)

BURNER FUEL GAS FLOW TOTALIZER

BURNER AIR TO BURNER FUEL GAS FLOW RATIO CONTROLLER

BURNER AIR FLOW CONTROL VALVE CURRENT TO PREUMATIC CONVERTER

BURNER AIR FLOW TOTALIZER

UPPER BURNER AIR FLOW RECORDER (GREEN PEN)

LOWER BURNER AIR FLOW RECORDER (RED PEN)

BURNER AIR FLOW VOLTAGE TO CURRENT CONVERTER

BURNER AIR MASS FLOW TRANSDUCER ELECTRONICS MODULE

BURNER AIR MASS FLOW TRANSDUCER AND SENSOR

ORIGINAL ISSUE

Flow Control Rack
Wiring Diagram

NONE | 5 | 105Y-223009D2

PART NUMBER			PARTS LIST
PREFIX NUMBER			DESCRIPTION

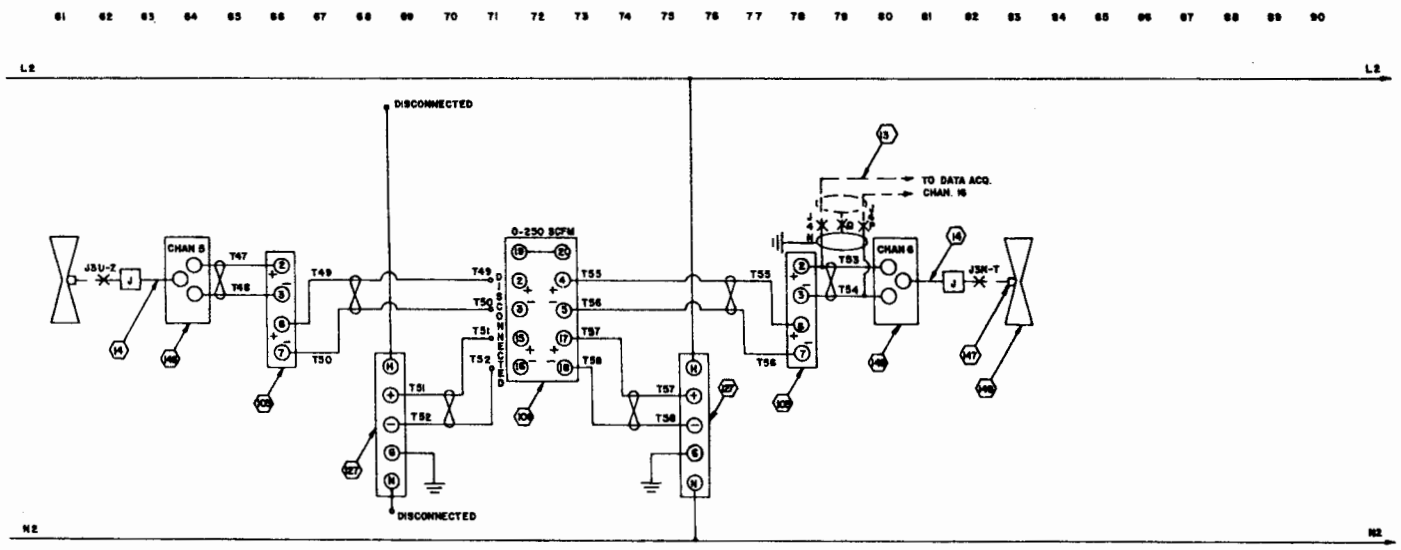

SPARE MASS FLOW CHANNEL

RECORDER (RED PEN)

UNDERFIRE AIR FLOW RECORDER (GREEN PEN)

UNDERFIRE AIR FLOW TOTALIZER

UNDERFIRE AIR FLOW VOLTAGE TO CURRENT CONVERTER

UNDERFIRE AIR MASS FLOW TRANSDUCER ELECTRONICS MODULE

UNDERFIRE AIR MASS FLOW TRANSDUCER AND SENSOR

REVISED BY	CHKD BY	REVISIONS	DATE	CHANGED BY	CHECKED BY	APPROVED BY
—		ORIGINAL ISSUE	—	—	—	—

University of California
LOS ALAMOS SCIENTIFIC LABORATORY
Post Office Box 1663 Los Alamos, New Mexico 87544

CLASSIFICATION OF DRAWING: UNC

PART: UNC TITLE BLOCK: UNC

TITLE

Flow Control Rack Wiring Diagram

	SIGNATURE	DATE	GROUP
DESIGNED	HOEZIG	6-5-78	H7
DRAWN	Wharton	1-22-80	E2
CHECKED	PRIOLO	2-12-80	H7
PROJ. ENGR	HOEZIG	2-5-78	H7
APPROVED		2/14/80	H7
CALCULATED		2-26-81	H7

TOLERANCE - (UNLESS OTHERWISE NOTED)
X = ± ANGULAR = ±
X.X = ± X.XX = ± FINISH -

SCALE NONE | TOTAL SHEETS 5 | DRAWING NO. 103Y-223009D3 | SHEET

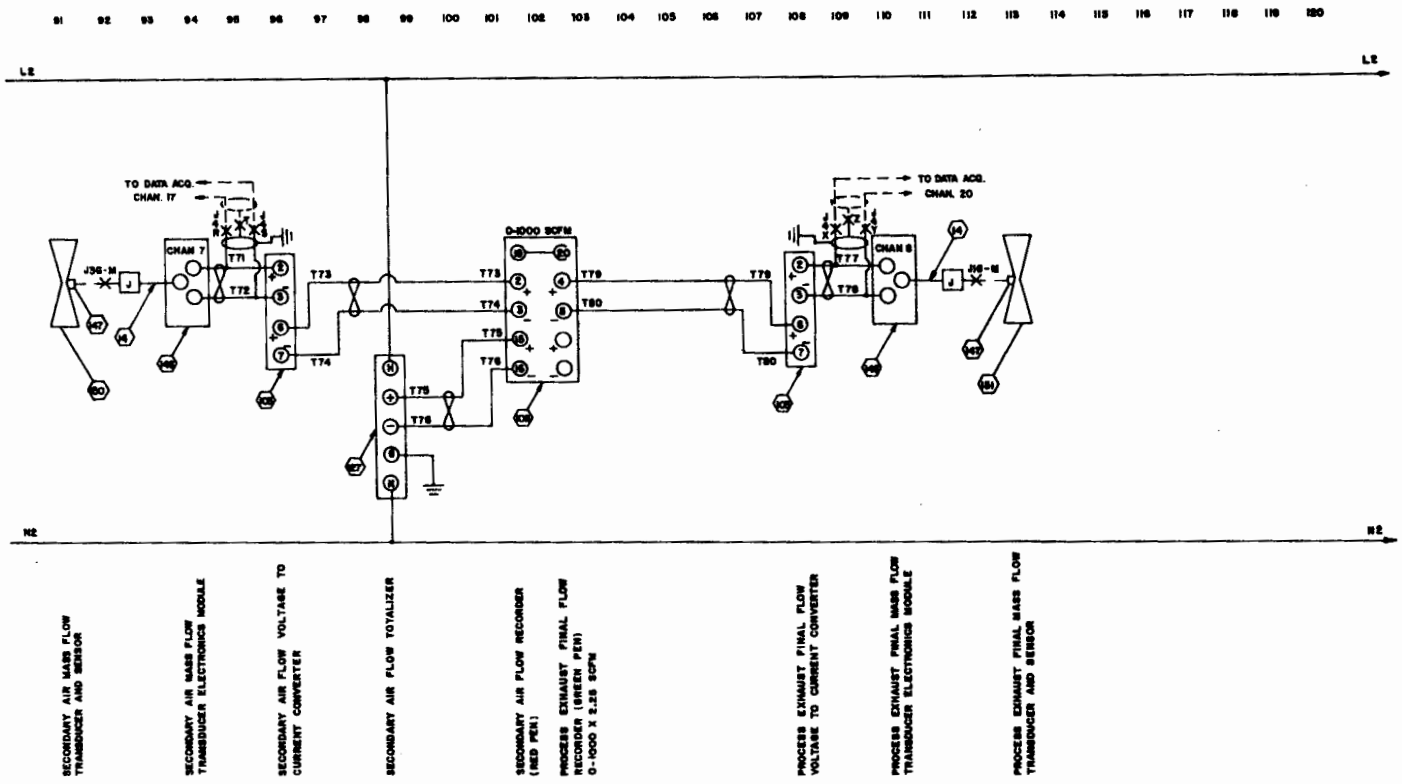

PART NUMBER		PARTS LIST	
PARTS NUMBER			DESCRIPTION

—		ORIGINAL ISSUE	—	—	—	—
REVISED BY	CHECKED BY	REVISIONS	DATE	DRAWN BY	CHECKED BY	APPROVED BY

LASL

LOS ALAMOS SCIENTIFIC LABORATORY
Post Office Box 1663 Los Alamos, New Mexico 87545

CLASSIFICATION OF DESIGNED: UNC
PART: UNC TITLE BLOCK: UNC

TITLE

Flow Control Rack Wiring Diagram

	SIGNATURE	DATE	GROUP
DRAWN BY	KOENIG	6-5-78	H7
CHECKED	VOGTMAN	6-22-78	H7
APPROVED	BIO-LOR	6-23-78	H7
FINAL APPR.	KOENIG	6-3-78	H7
APPROVED		7/18	H7
APPROVED		12-14-78	H7

TOLERANCE - UNLESS OTHERWISE NOTED
X = ± 0.XX = ± ANGULAR = ±
0.XX = ± 0.XXX = ± FINISH =

SCALE NONE | TOTAL SHEETS 5 | DRAWING NO. 103Y-223009D4 | GROUP

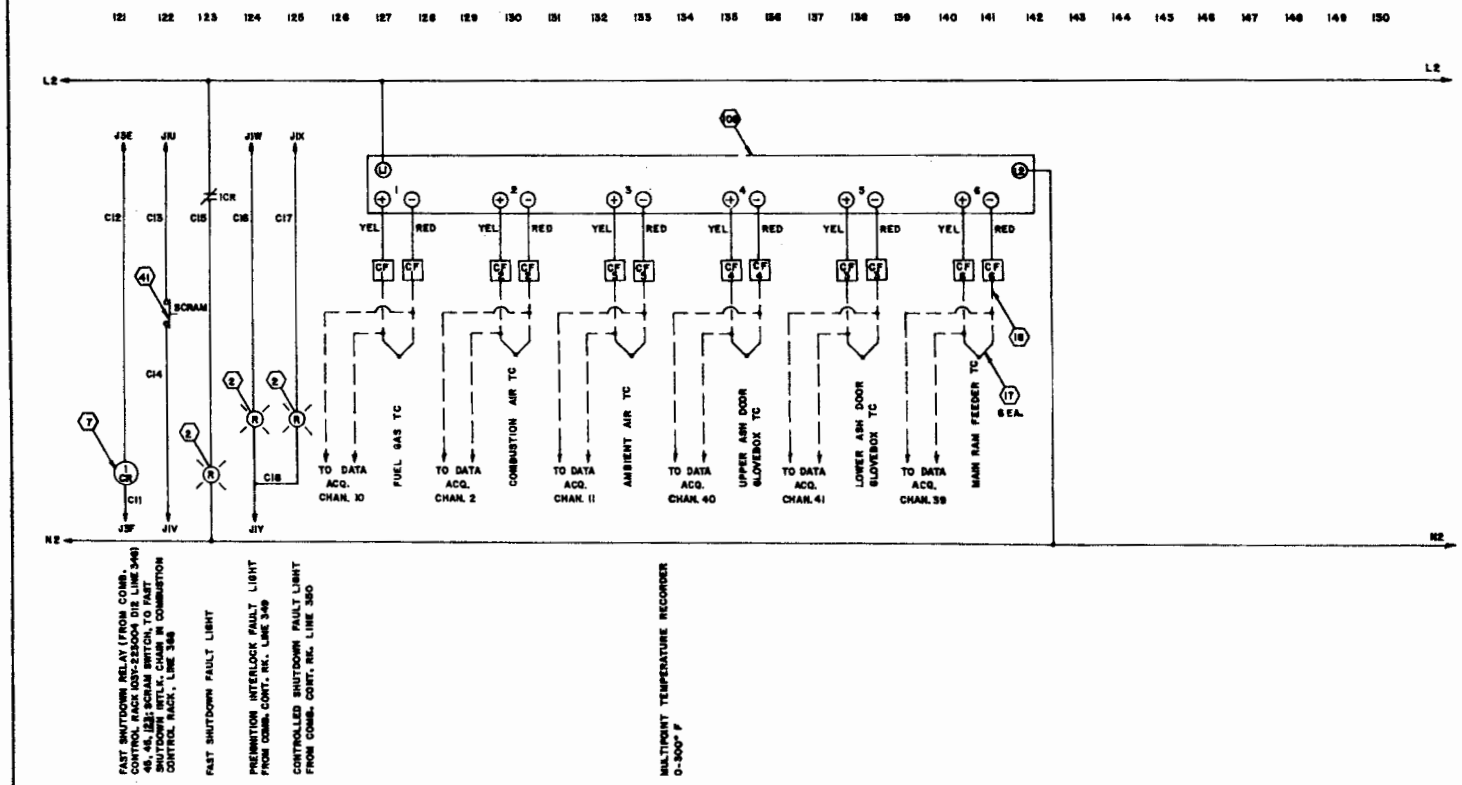

PART NUMBER			PARTS LIST
PROP'N NUMBER	FIND NUMBER	REQD QTY	DESCRIPTION

REVISION LETTER	CLASS. CHANGE	REVISIONS	DATE	CHECKED BY	ENGRG'D BY	APPROVED BY
–	Ic	ORIGINAL ISSUE	–	–	–	–

University of California
LOS ALAMOS SCIENTIFIC LABORATORY
Post Office Box 1663 Los Alamos, New Mexico 87544

CLASSIFICATION OF DRAWING: UNC
PART: UNC TITLE BLOCK: UNC

TITLE
Flow Control Rack Wiring Diagram

	SIGNATURE	DATE	GROUP
DESIGNATED	KOENIG	6-2-76	H7
DRAWN	Wharton	4-28-80	E2
ENGINEER	RIDLON	5-19-80	H7
FINAL CHECK	KOENIG	5-9-80	H7
APPROVED	[illegible]	5/9/80	H7
RELEASED	[illegible]	5-9-80	H7

TOLERANCE - (UNLESS OTHERWISE NOTED)
X ± ± ~ 0.XX ± ± ~ ANGULAR ± ± ~
0.X ± ± ~ 0.XXX ± ± ~ Finish ~ ~

SCALE NONE | TOTAL SHEETS 5 | DRAWING NO. 103Y-223009D5 | GROUP

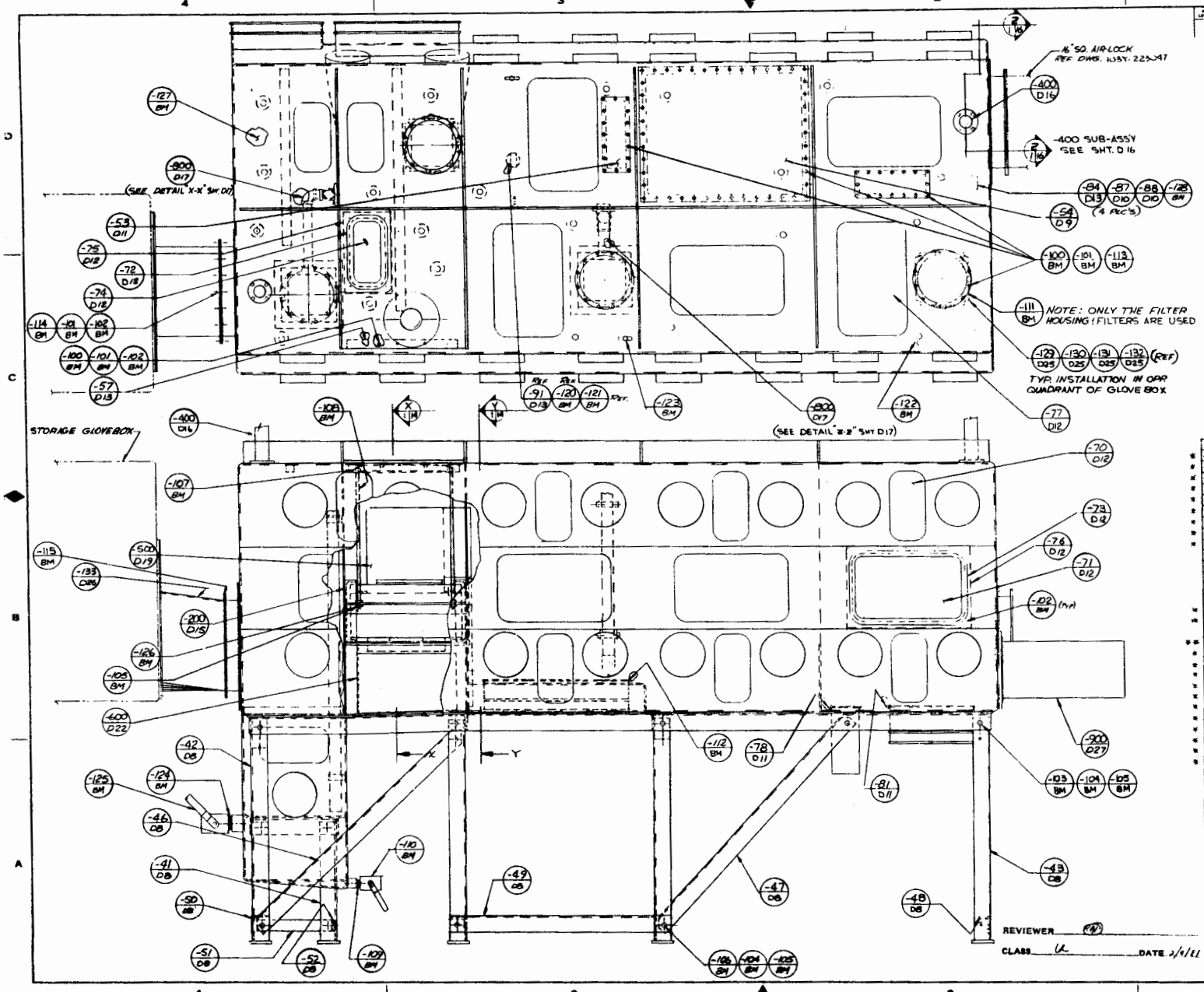

NOTES:

1. SEE DWG. 103Y-223000 & 103Y-223002 FOR ON SITE MODIFICATIONS TO THIS BOX

* ITEMS SUPPLIED BY LASL

** ENG-C-80288 PARTS THAT ATTACH INSIDE GLOVEBOX ARE NOT REQ'D. FOR THIS DWG. (DO NOT MANUFACTURE)

PART NUMBER	NO. REQ'D		DESCRIPTION
-128	5		¼-20 UNC HEX. HD. JAM NUT - SST
-127	1		COMPACTOR - MONT. WARD No 68C 5008 R.
-126	1		SHREDDER - SHRED-PAC MODEL A27
-125	1		2" VALVE, BALL, LASL #HF-7748/6Q-62
-124	1		2"x2" NIPPLE, CLOSE - STL
-123	2		MAGNEHELIC GAUGE, 0-10, LASL #HF-1097/6S-21
-122	21		SPRINKLER HEAD - GRINNELL AQUAMATIC, ON-OFF, MOD #F920
-121	4 ft		⅛ DIA WIRE ROPE - SST
-120	2		#5-32 x 1½ LG. BOLT, SPADE - STL. - HF-7323/6W-117
-119			
-118			
-117			
-116			
-115	1		GASKET - DWG. NO. ENG-E-513 RN.-105
-114	24		¼-20 UNC x ¾" LG. SOC. HD. SCREW - SST
-113	142		¼-80 NUT, HEX HD. - SST
-112	1		LID - LASL DWG. No. ENG-E-511-102
-111	4		EXHAUST FILTER ASSY. - ENG-C-80288
-110	1		1" VALVE, BALL, LASL #HF-5142/6Q-49
-109	1		1 x 5 NIPPLE, CLOSE, SCREWED PIPE - SST
-108	2		½-13 x 26 LG. THREADED ROD - STL.
-107	2		½-13 NUT, CLAMPING W/SPRING - UNISTRUT #P-1010-STL
-106	1		½-13 x 1¾ LG. HEX HD. CAP SCREW - STL
-105	41		½-13 HEX HD. NUT - STL.
-104	41		½ WASHER, LOCK - STL.
-103	40		½-13 x 1¾ LG. HEX HD. CAP SCREW - STL
-102	206		¼-20 ACORN NUT - SST.
-101	203		¼ WASHER, LOCK - SST.
-100	171	MAX	¼ WASHER, FLAT - SST.

BILL OF MATERIAL

los alamos scientific laboratory
engineering department
UNIVERSITY OF CALIFORNIA — LOS ALAMOS, NEW MEXICO

TITLE: TREATMENT DEVELOPMENT FACILITY
SORTING / SHREDDER COMPACTOR GLOVE BOX

	DRAWING	DATE	SHEET
DESIGN	GW/RP	6-19-78	RM-6
DRAWN	RY Thorne	DEC 28 78	RM5-6
CHECKED	Bowman	2-25-75	Eng-6
PROJ. ENGR.	H. Hoover	5-16-78	Eng-6
APPROVED	P.S. Lilly	6-19-78	RM6
APPROVED	A.S. Nelson	2-27-81	H7

PART NO.
D.A. NO.
L.A. NO. 4790-80
SCALE 1/8
TOTAL SHEETS 32
DRAWING NO. 103Y-22013
SHEET D17
REV

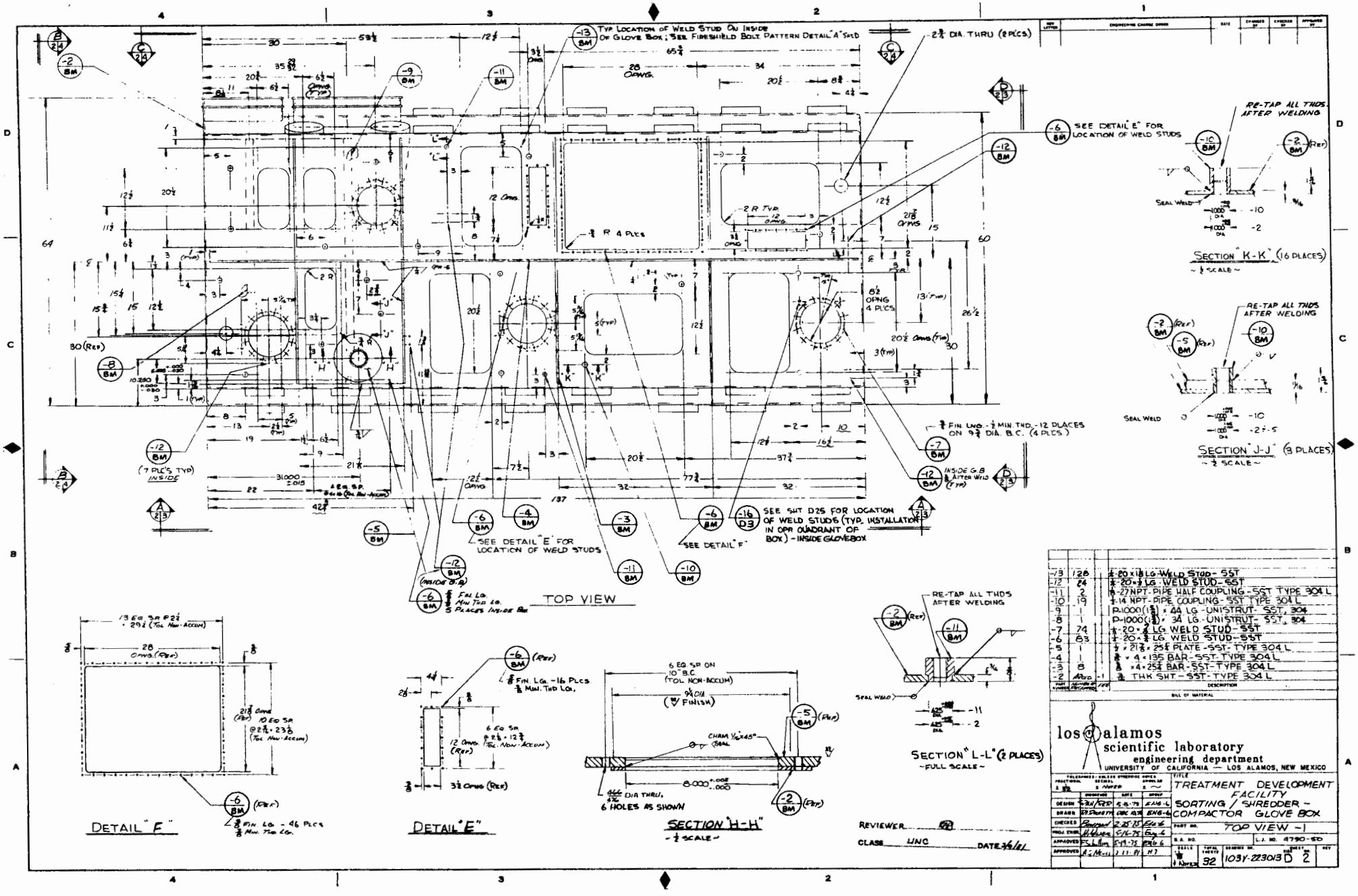

-13	128		1/4-20 x 1 1/2 LG. WELD STUD - SST
-12	74		1/4-20 x 3/4 LG. WELD STUD - SST
-11	2		1/4-27 NPT - PIPE HALF COUPLING - SST TYPE 304 L
-10	19		1/4-14 NPT - PIPE COUPLING - SST TYPE 304 L
-9	1		P-1000 (1 3/8) x 44 LG. - UNISTRUT - SST, 304
-8	1		P-1000 (1 3/8) x 34 LG. - UNISTRUT - SST, 304
-7	74		1/4-20 x 1/2 LG. WELD STUD - SST
-6	83		1/4-20 x 3/4 LG. WELD STUD - SST
-5	1		3/8 x 21 7/8 x 25 1/2 PLATE - SST - TYPE 304 L
-4	1		3/8 x 4 x 135 BAR - SST - TYPE 304 L
-3	8		3/8 x 4 x 25 1/2 BAR - SST - TYPE 304 L
-2	As req.	-1	3/8 THK SHT - SST - TYPE 304 L
PART NUMBER	REQUIRED	REV	DESCRIPTION

BILL OF MATERIAL

los alamos scientific laboratory
engineering department
UNIVERSITY OF CALIFORNIA — LOS ALAMOS, NEW MEXICO

DESIGN			
DRAWN			
CHECKED			
PROJ ENGR			
APPROVED			
APPROVED			

TITLE: TREATMENT DEVELOPMENT FACILITY SORTING / SHREDDER - COMPACTOR GLOVE BOX
TOP VIEW - 1
B.A. NO. 4790-SD
L.I. NO.
SCALE 1/4 = 1 FOOT
TOTAL SHEETS 32
DRAWING NO. 103Y-223013
SHEET NO. 2
REV D

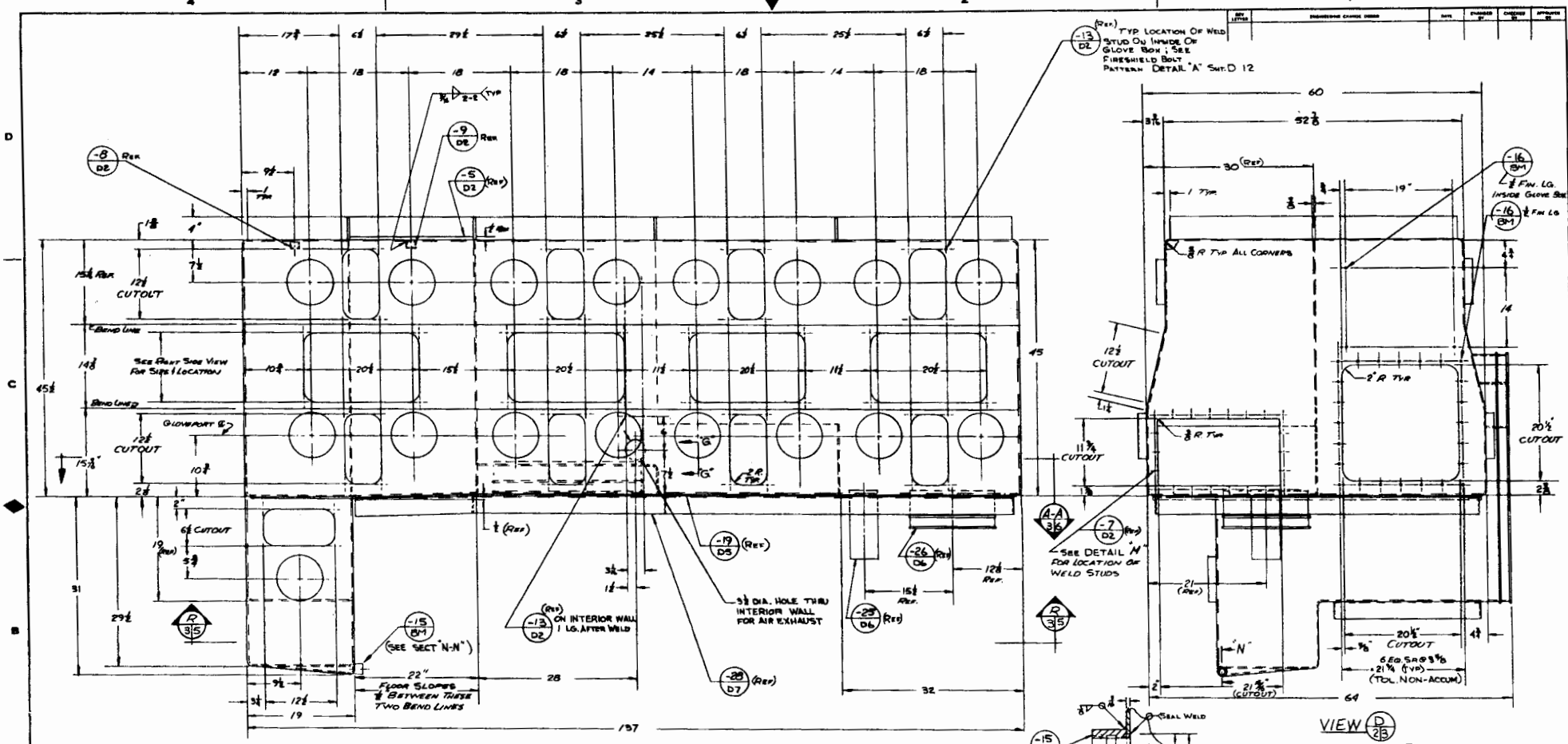

-16	66		2-20 × ½ LG.-WELD STUD-SST
-15	1		1"-11½-PIPE COUPLING-SST
-14	34	-1	8 I.D. × ⅛ WALL-TUBING-SST TYPE 304 L
PART NUMBER	NO. PRESENT	REV	DESCRIPTION

BILL OF MATERIALS

los alamos scientific laboratory
engineering department
UNIVERSITY OF CALIFORNIA — LOS ALAMOS, NEW MEXICO

TITLE: TREATMENT DEVELOPMENT FACILITY SORTING / SHREDDER-COMPACTOR GLOVE BOX

DESIGN 5-26-75 EWG-G
DRAWN 5-15-75 EWG-G
CHECKED 7-25-75 EWG-G
PROJ. ENGR. 6-16-75 EWG-G
APPROVED 6-19-75 EWG-G
APPROVED 2-11-75 H7

PART NO.
B.A. NO.
L.A. NO. 67730-50
SCALE 1/4
TOTAL SHEETS 32
DRAWING NO. 105Y-223013 D
SHEET 3
REV

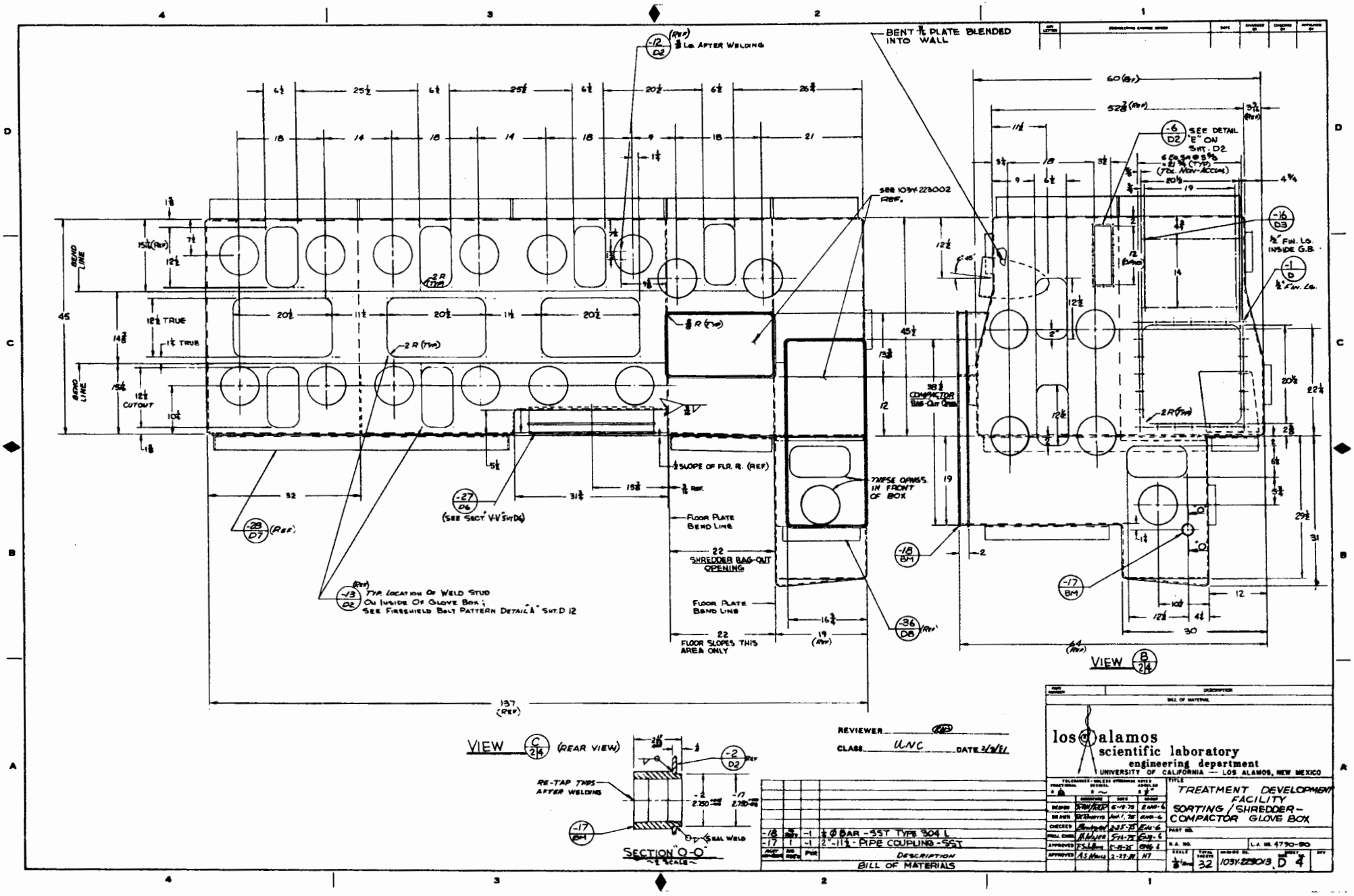
BENT 7/16 PLATE BLENDED INTO WALL
-12 D2 (REF) 3/8 LG. AFTER WELDING
SEE 1031-223002 REF.
-6 D2 SEE DETAIL "E" ON SHT. D2
-16 D3 1/2" FIN. LG. INSIDE G.B.
-1 D 1/2" FIN. LG.
BEND LINE
TRUE
CUTOUT
2 R (TYP)
3/8 R (TYP)
1/2 SLOPE OF FLR. R. (REF)
FLOOR PLATE BEND LINE
SHREDDER BAG-OUT OPENING
FLOOR SLOPES THIS AREA ONLY
COMPACTOR BAG-OUT OPEN.
THESE OPNGS. IN FRONT OF BOX
-27 D4 (SEE SECT V-V SHT D4)
-28 D7 (REF)
-13 D2 (REF) TYP. LOCATION OF WELD STUD ON INSIDE OF GLOVE BOX; SEE FIRESHIELD BOLT PATTERN DETAIL "A" SHT. D 12
-18 BM
-17 BM
-36 D8 (REF)
VIEW B 2/4
VIEW C 2/4 (REAR VIEW)
-2 D2 REF
RE-TAP THDS AFTER WELDING
SEAL WELD
SECTION "O-O"
REVIEWER
CLASS UNC DATE 2/3/61
-18 1 -1 1/2 Ø BAR - SST TYPE 304 L
-17 1 -1 2"-11 1/2 - PIPE COUPLING - SST
DESCRIPTION
BILL OF MATERIALS
los alamos scientific laboratory
engineering department
UNIVERSITY OF CALIFORNIA — LOS ALAMOS, NEW MEXICO
TREATMENT DEVELOPMENT FACILITY
SORTING / SHREDDER-COMPACTOR GLOVE BOX
1031-223013 D 4

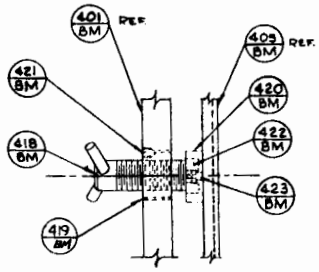

SECTION B/D16
SCALE: 1/2"=1"
SECTION ROTATED 90° CCW

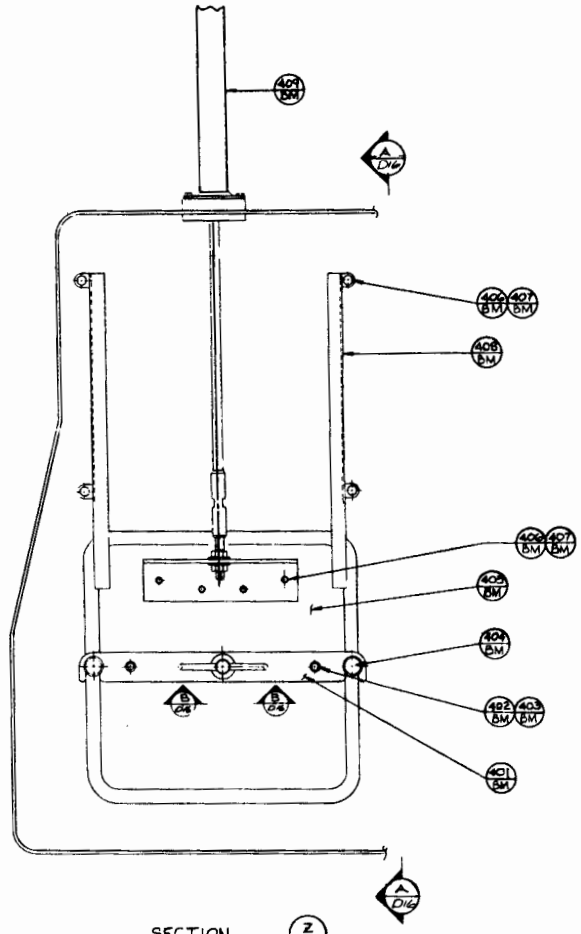

SECTION Z/1/16
SCALE: 1/4"=1"

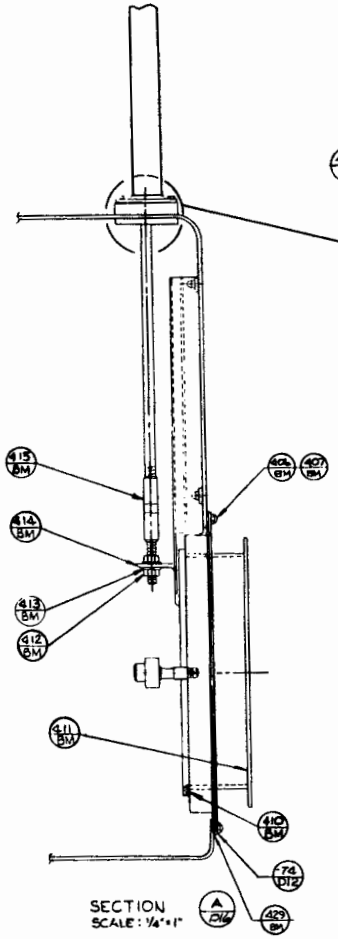

SECTION A/D16
SCALE: 1/4"=1"

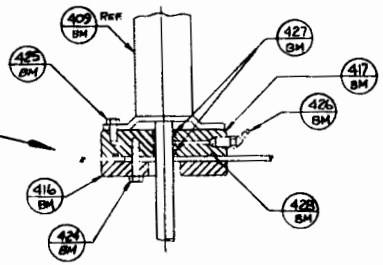

400/D1 ASSEMBLY

429	1	-400	LASL DWG. NO 87Y-217010-104 (SHT. 9)
428	1	-400	"O" RING NEOPRENE .139 WALL x 3.234" I.D. 70 DUROMETER HARDNESS. "PARKER" OR EQUAL
427	2	-400	"O" RING NEOPRENE .103 WALL x .612 I.D. 70 DUROMETER HARDNESS "PARKER" OR EQUAL
426	1	-400	LUBRICATION FTNG. #302E-B ALEMITE, OR EQUAL
425	4	-400	1/4-20 UNC x 1/2 LG. HEX. HD. SCR - SST
424	3	-400	1/4-20 UNC x 1 LG. HEX. HD SCR - SST
423	1	-400	#8-32 x 1/2 LG. SOC. HD. SCR - SST
422	1	-400	1/2 BORE x 7/16 WIDE x 1 7/64 DIA. THRUST BEARING #603 BOSTON GEAR WORKS
421	1	-400	#8-32 x 3/8 LG. HEADLESS SET SCR - SST
420	1	-400	LASL DRWG NO. 87Y-217010-119 (SHT. 10)
419	1	-400	LASL DRWG NO. 87Y-217010-116 (SHT. 10)
418	1	-400	LASL DRWG NO. 87Y-217010-114 (SHT. 10)
417		-400	LASL DRWG NO. 87Y-217010-104 (SHT. 13)
416	1	-400	LASL DWG NO. 87Y-217010-105 (SHT. 13)
415	1	-400	LASL DWG NO. 87Y-217010-112 (SHT. 11)
414	1	-400	LASL DWG NO. 87Y-217010-113 (SHT. 11)
413	2	-400	5/8 LOCK WASHER - SST
412	2	-400	5/8-11 UNC HEX NUT - SST
411	1	-400	LASL DWG NO. 87Y-217010-103 (SHT. 6)
410	1	-400	GASKET "C" SECT. SQ. LASL FURNISHED
409	1	-400	2" BORE, 17 1/2" STROKE, ADJUSTABLE CUSHION, FLANGE MOUNTED ROTEX AIR CYLINDER OR EQUAL
408	2	-400	LASL DWG NO. 87Y-217010-107 (SHT. 8)
407	8	-400	1/4-20 UNC (DEEP) ACORN NUT - SST
406	8	-400	1/4 LOCK WASHER - SST
405	1	-400	LASL DWG NO. 87Y-217010-108 (SHT. 9)
404	2	-400	LASL DWG NO. 87Y-217010-110 (SHT. 9)
403	2	-400	SPRING COMPRESSION TYPE - 3/4" LG. FREE LENGTH 5/8" LG. COMP LENGTH, TO FIT 3/8" DIA. BOLT (8" TO 10" COMPRESSION) SST.
402	2	-400	3/8-16 UNC STD. SOC. HD. SCREW x 2 3/4" LG. WITH 7/16" THREAD LENGTH - SST.
401	1	-400	LASL DWG. NO. 87Y-217010-109 (SHT. 10)
PART NUMBER	NO. REQ'D	PER	DESCRIPTION

BILL OF MATERIAL

REVIEWER RAO

CLASS UNC DATE 2/9/71

los alamos scientific laboratory
engineering department
UNIVERSITY OF CALIFORNIA — LOS ALAMOS, NEW MEXICO

DESIGN	Bill Tate	2-19-71	Eng-6
DRAWN	J. Mulvee	2/23/71	Eng-6
CHECKED	Bowman	2-25-71	Eng 6
ENGL CHIEF	R. Wilhite	2-26-71	Eng 6
APPROVED	S.L. Ulm	3-11-71	Eng 6
APPROVED	R.S. McCord	3-17-71	H-7

TITLE
TREATMENT DEVELOPMENT FACILITY
SORTING / SHREDDER
COMPACTOR GLOVE BOX

PART NO.
B.A. NO.
L.I. NO.
SCALE 1/4"=1" TOTAL SHEETS 32 DRAWING NO. 108Y-223013 SHEET D 16 REV

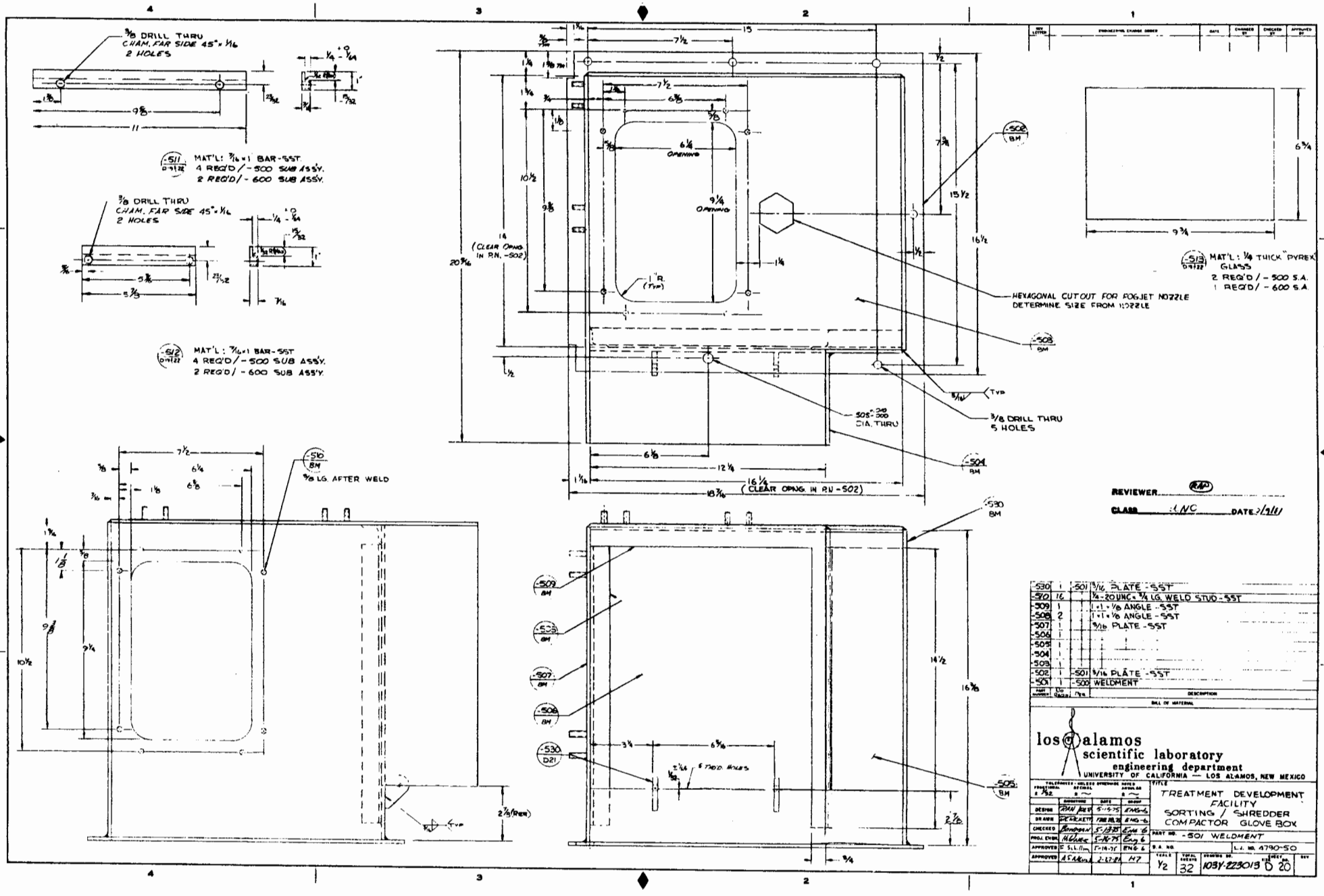
3/8 DRILL THRU
CHAM. FAR SIDE 45° × 1/16
2 HOLES
-511 D-9122
MAT'L: 3/16 × 1 BAR-SST.
4 REQ'D / -500 SUB ASS'Y.
2 REQ'D / -600 SUB ASS'Y.
-512 D-9122
MAT'L: 3/16 × 1 BAR-SST
4 REQ'D / -500 SUB ASS'Y.
2 REQ'D / -600 SUB ASS'Y.
-513 D-9122
MAT'L: 1/4 THICK "PYREX" GLASS
2 REQ'D / -500 S.A.
1 REQ'D / -600 S.A.
HEXAGONAL CUTOUT FOR FOGJET NOZZLE
DETERMINE SIZE FROM NOZZLE
3/8 DRILL THRU
5 HOLES
(CLEAR OPNG IN P.N. -502)
(CLEAR OPNG. IN P.N. -502)
-510 BM
3/8 LG. AFTER WELD
REVIEWER
CLASS UNC
DATE 7/9/11
-530 1 -501 3/16 PLATE -SST
-510 16 1/4-20 UNC × 3/4 LG. WELD STUD -SST
-509 1 1 × 1 × 1/8 ANGLE -SST
-508 2 1 × 1 × 1/8 ANGLE -SST
-507 1 3/16 PLATE -SST
-506 1
-505 1
-504 1
-503 1
-502 1 -501 3/16 PLATE -SST
-501 1 -500 WELDMENT
PART NUMBER | NO. REQ'D | MAT'L | DESCRIPTION
BILL OF MATERIAL
los alamos
scientific laboratory
engineering department
UNIVERSITY OF CALIFORNIA — LOS ALAMOS, NEW MEXICO
TREATMENT DEVELOPMENT FACILITY
SORTING / SHREDDER COMPACTOR GLOVE BOX
PART NO. -501 WELDMENT
L.A. NO. 4790-50
SCALE 1/2
TOTAL SHEETS 32
DRAWING NO. 103Y-229013
SIZE D
SHEET NO. 20

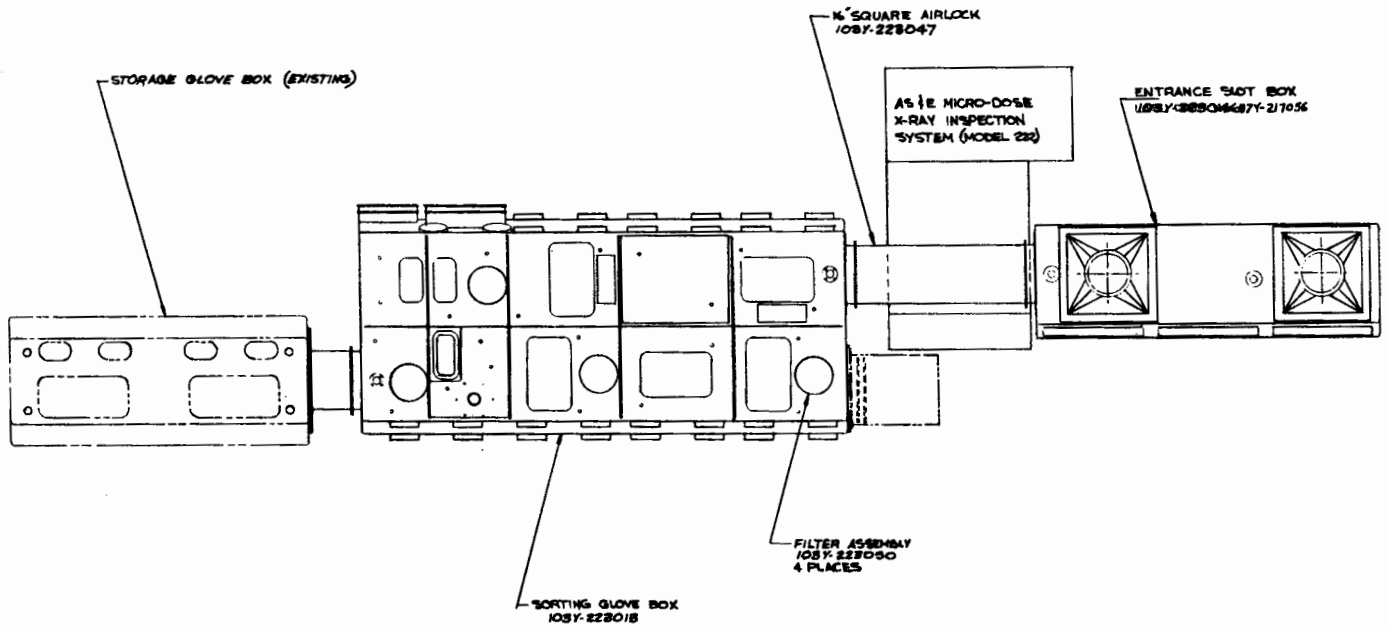

REVIEWER

CLASS UNC DATE 2/3/81

los alamos scientific laboratory
engineering department
UNIVERSITY OF CALIFORNIA — LOS ALAMOS, NEW MEXICO

TITLE
TREATMENT DEVELOPMENT FACILITY
GLOVE BOX LINE - GENERAL ARRANGEMENT AND NOTES

DESIGN
DRAWN
CHECKED
PROJ. ENGR.
APPROVED
APPROVED

PART NO.

B.A. NO.

L.J. NO. 4790-80

SCALE

TOTAL SHEETS 1

DRAWING NO. 103Y-223015 D1

SHEET

REV A

BILL OF MATERIAL

PART NUMBER	DESCRIPTION

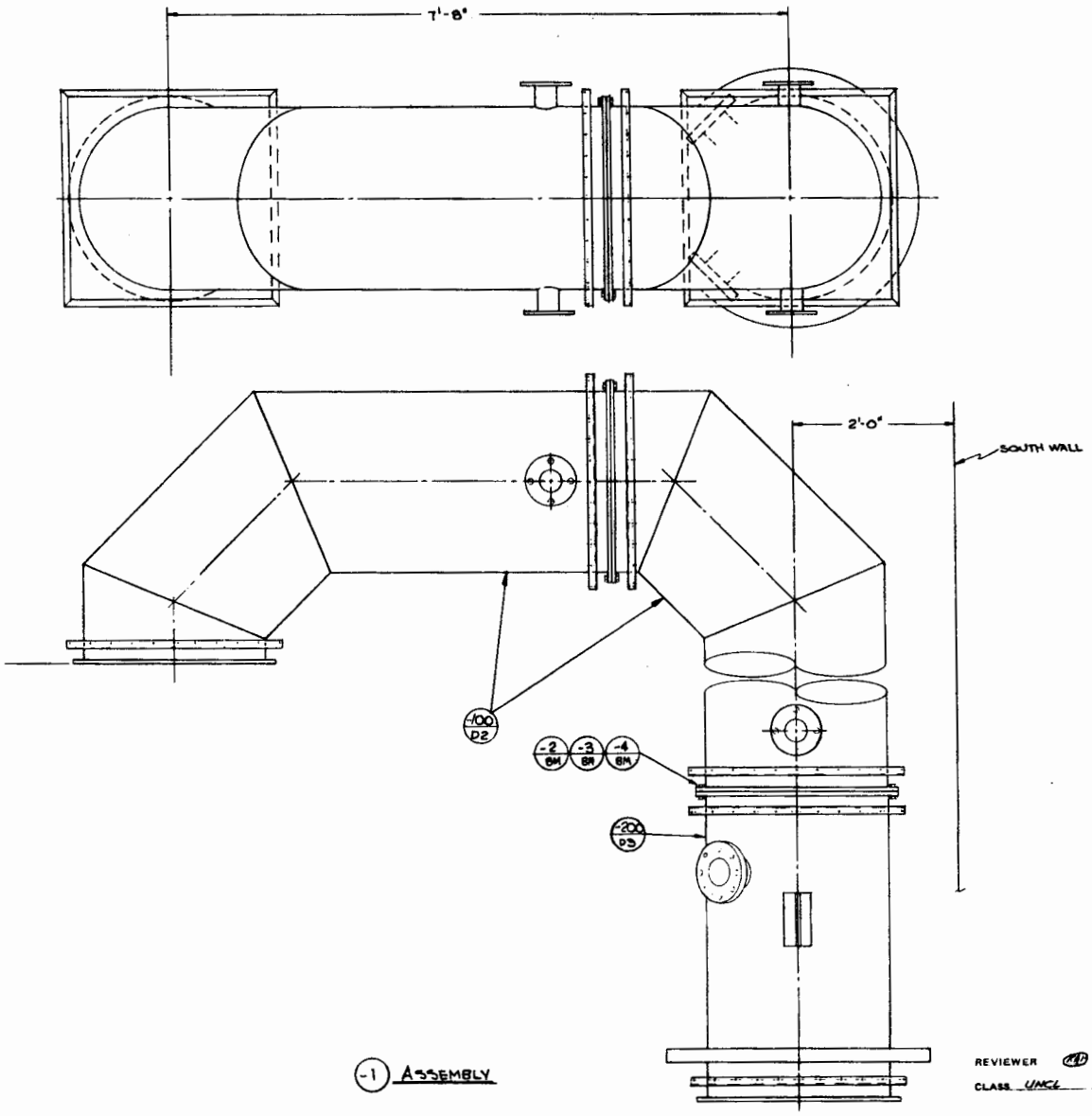

(-1) ASSEMBLY

~ GENERAL NOTES ~

(1) FOSTER STACKFAS MASTIC: SURFACE PREPARATION SHALL BE BY COMMERCIAL BLAST CLEANING. APPLICATION SHALL BE MADE WITH AN AIRLESS SPRAY GUN IN ONE 5/16" THICK (WET FILM) COAT.

(2) SURFACE COATING: EXTERIOR SURFACE PREPARATION SHALL BE BY COMMERCIAL BLAST CLEANING (SP-6). EXTERIOR SURFACES TO BE COATED WITH 2 MILS CARBOLINE CO. CARBOZINC #11 INORGANIC ZINC PRIMER.

(3) SEAL WELDS SHALL BE CONTINUOUS LEAK PROOF WELD

PART NUMBER	DWG. REFERENCE	PER	DESCRIPTION
-4		-1	1/2"-13 UNC HEX. HD LOCK NUT
-3		-1	1/2" DIA. WASHER, LOCK - STL.
-2		-1	1/2 x 13 UNC x 1 3/4" LG. HEX. HD CAP SCREW - STL.

BILL OF MATERIAL

REVIEWER [illegible]

CLASS UNCL DATE 1/4/61

los alamos scientific laboratory

UNIVERSITY OF CALIFORNIA — LOS ALAMOS, NEW MEXICO

TOLERANCES - UNLESS OTHERWISE NOTED: FRACTIONAL ± ; DECIMAL ± ; ANGULAR ±

	SIGNATURE	DATE	GROUP
DESIGN	[illegible]	2/10/61	H-7
DRAWN	[illegible]	1-10-61	WX-4
CHECKED	[illegible]	2-10-61	WX-4
PROJ. ENGR.	[illegible]	1-7-61	H7
APPROVED	[illegible]	2/10/61	H-7
APPROVED	[illegible]	2-27-61	H7

TITLE: TREATMENT DEVELOPMENT FACILITY TRANSITION DUCT & EXPANSION JOINT

PART NO.

S.A. NO. L.J. NO.

SCALE 1/8" | TOTAL SHEETS 3 | DRAWING NO. 103Y223021 D1 | SHEET NO. | REV. A

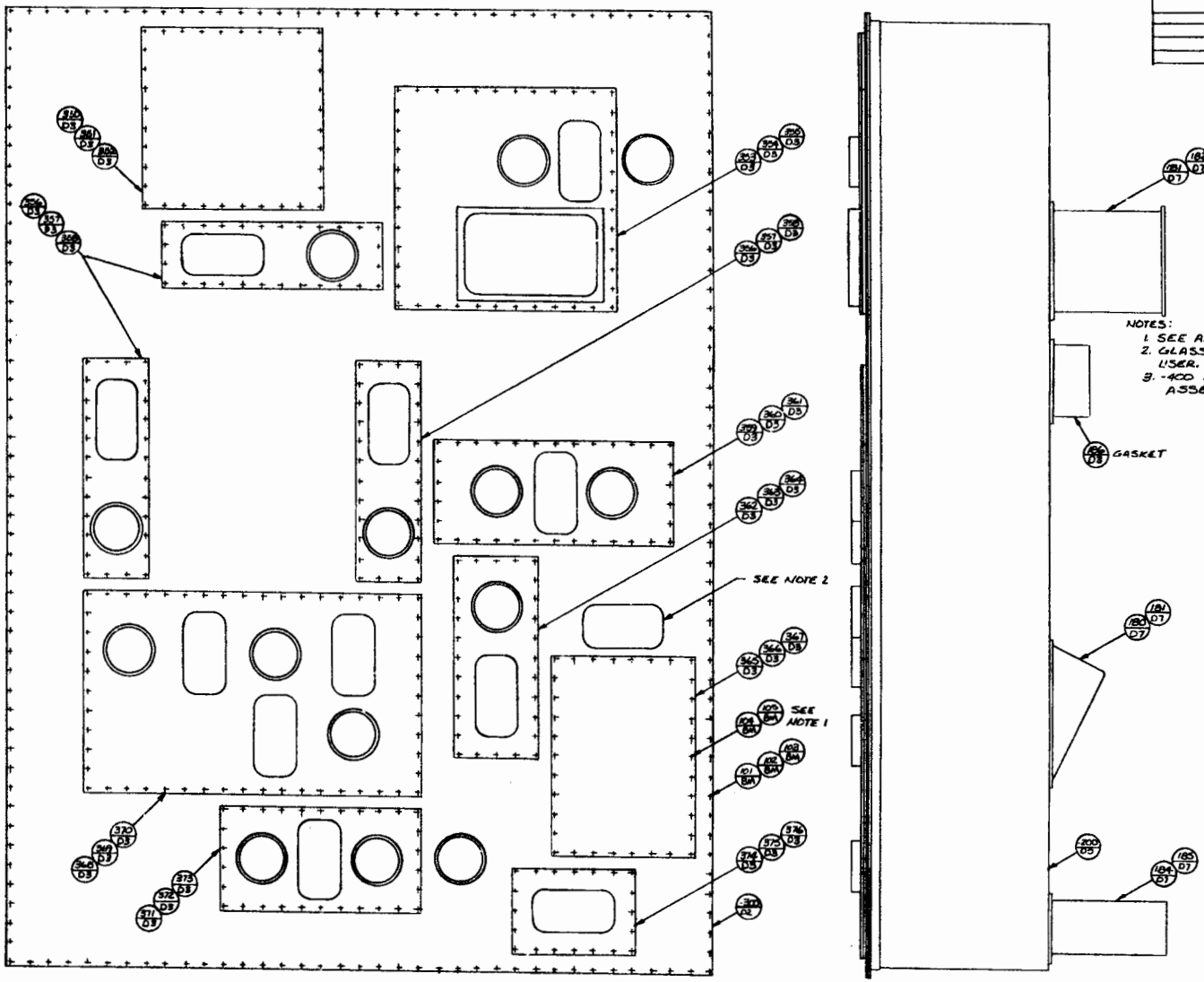

PART NUMBER		PARTS LIST	
PREFIX NUMBER	ITEM NUMBER	REQD	DESCRIPTION
	101	170	1/4"-20 UNC X 1" LONG BOLT
	102	170	1/4"-20 UNC NUT
	103	170	1/4"- SPLIT LOCK WASHER
	104	308	5/16"-16 ACORN NUT
	105	308	5/16"- SPLIT LOCK WASHER

NOTES:
1. SEE ASSEMBLY DETAIL J SHEET D3.
2. GLASS & GASKETS SUPPLIED BY USER. DETAILS ON 103Y-223003-D6 & D7.
3. -400 SUPPORT ASSEMBLY & -500 FILTER ASSEMBLY NOT SHOWN.

REVISION LETTER	REVISIONS	DATE	CHECKED BY	CHECKED BY	APPROVED BY
—	ORIGINAL ISSUE	—	—	—	—

CLASSIFICATION OF DRAWING: UNC
PART: UNC TITLE BLOCK: UNC

University of California
LOS ALAMOS SCIENTIFIC LABORATORY
Post Office Box 1663 Los Alamos, New Mexico 87544

TITLE
TDF- COMBUSTION AIR SYSTEM CONTAINMENT BOX

	SIGNATURE	DATE	GROUP
DESIGNATED	RICKETTS	5-2-80	WK-9
DRAWN	WNORTON	11-80	E2
CHECKED	WNORTON	11-80	E2
PROJ. ENGR.	M. Nunez	5-5-86	W-9
APPROVED	Koenig	5-6-86	H7
RELEASED	A. S. Koenig	2-27-88	H7

TOLERANCE - (UNLESS OTHERWISE NOTED)
X - ± — O.XX - ± — ANGULAR - ± —
O.X - ± — O.XXX - ± — FINISH - —

SCALE 1/8 TOTAL SHEETS 8 DRAWING NO. 103Y-223022 SHEET D REV. 1

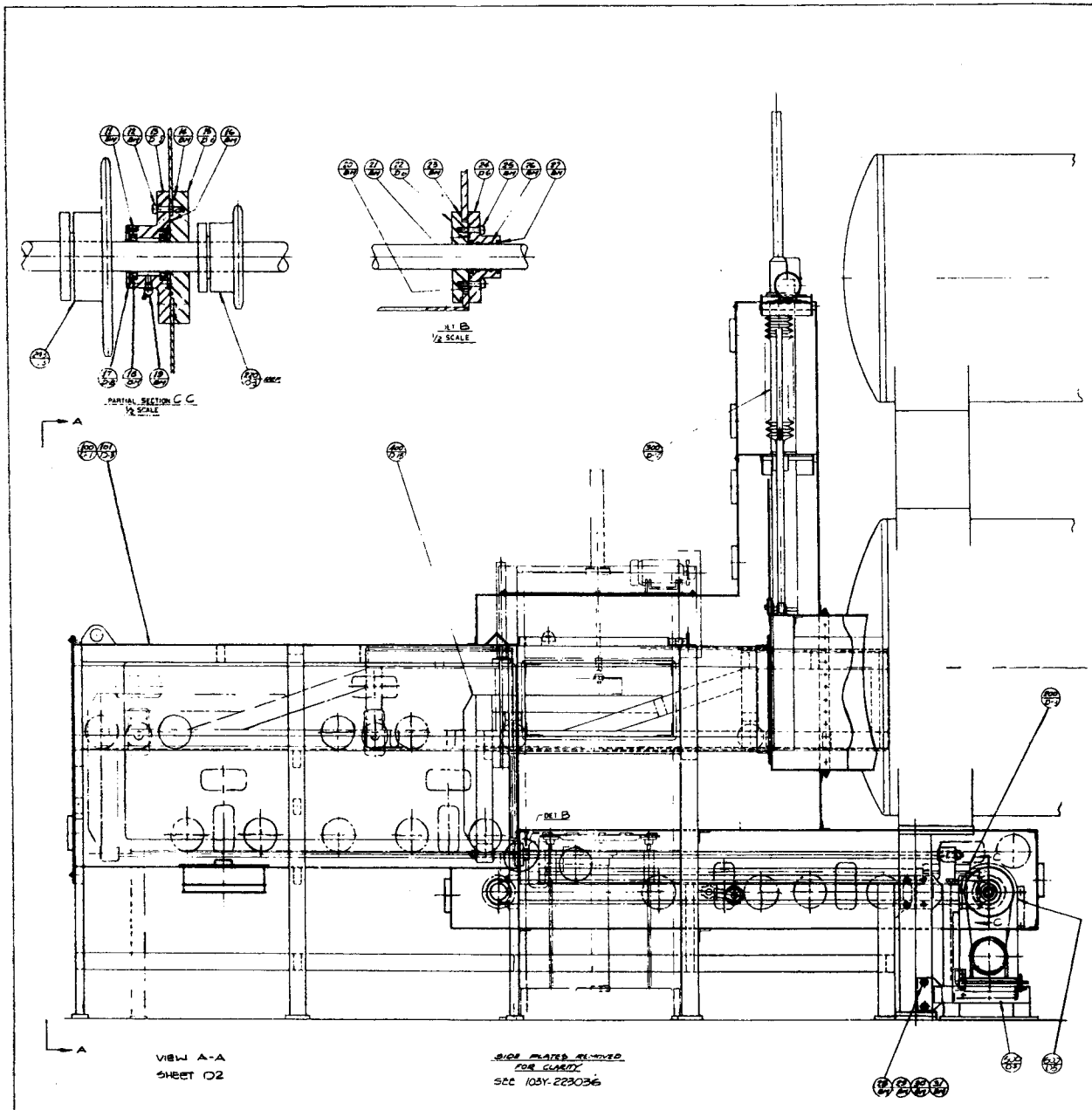

100	1	-	SUB-ASSEMBLY MAIN FRAME & CONTAINMENT
200	1	-	SUB-ASSEMBLY CHAIN DRIVE MECHANISM
300	1	-	SUB-ASSEMBLY GUILLOTINE DRIVE ELEVATING MECHANISM
400	1	-	SUB-ASSEMBLY MAIN RAM FEEDER
500	1	-	DRIVE MOTOR BASE
600	1	-	CHAIN GUARD
* 1	13	AR	DRYBOX GLOVES PURCH. BY USER
* 2	-	-	UPPER GASKET #301
* 3	-	-	DRYBOX GLASS #40
* 4	8	-	HEX. HD. BOLT 1/2-13 x 2.00 LG.
* 5	8	-	FLAT WASHER 1/2 ID
* 6	16	-	ACORN NUT 3/4-6 UNC-2B
* 7	-	-	FLAT WASHER 3/8 ID
* 8	-	-	LOCK WASHER 3/8 ID
11	8	AR	SOC. FLAT HD. SCR. #10-32 UNC-2A x 1.00 LG.
12	16	-	SOC. HD. CAP SCR. 3/16-18 UNC-2A x 1.50 LG.
13	1	-	SEAL RETAINER, HC. [illegible]
14	1	-	O RING PARKER #2-247 (OR EQUIV)
15	1	-	SEAL CLAMP PLATE
16	1	-	O RING PARKER #2-146 (OR EQUIV)
17	2	-	SEAL RETAINER CAP
18	2	-	GREASE SEAL ITEM 2 [illegible]
19	1	-	HYDRAULIC GREASE FITTING ALEMITE #611-B 90° (OR EQUIV)
20	2	-	O RING PARKER #2-166 (OR EQUIV)
21	2	-	O RING PARKER #2-140 (OR EQUIV)
22	2	-	SEAL CLAMP PLATE
23	4	-	O RING PARKER #2-138 (OR EQUIV)
24	2	-	SEAL RETAINER, HOUSING
25	8	-	SOC. HD. CAP SCR. 3/8-16 UNC-2A x 1.25 LG.
26	4	-	O RING PARKER #2-228 (OR EQUIV)
27	4	-	WIPER 1500 SHAFT x 2.344 O.D. x .250 WIDE CHICAGO RAWHIDE #16892-NYM (OR EQUIV)
28	8	-	HEX HD. BOLT 1/2-13 UNC-2A x 2.50 LG.
29	8	-	HEX NUT 1/2-13 UNC-2B
30	16	-	FLAT WASHER 1/2 ID.
31	8	-	LOCK WASHER 1/2 ID.

NOTES:

1. * INDICATES ITEMS SHOWN ON SHEET D2
2. SEE 103Y-223036 FOR ENCLOSURE DETAILS

REVISION LETTER	CLASS. CHANGE	ORIGINAL ISSUE REVISIONS	DATE	CHANGED BY	CHECKED BY	APPROVED BY
-			-	-	-	-

CLASSIFICATION OF DRAWING UNC

PART UNC TITLE BLOCK UNC

University of California LOS ALAMOS SCIENTIFIC LABORATORY Post Office Box 1663 Los Alamos, New Mexico 87545

TITLE

TREATMENT DEVELOPMENT FACILITY:

MAIN RAM FEEDER

	SIGNATURE	DATE	GROUP
DESIGNATED	LUTES	2-22-76	UX-4
DRAWN	LUTES	3-26-76	UX-4
CHECKED	BOJMAN	4-16-76	UX-4
PROJ. ENGR	H. MULLEN	4-21-76	UX-4
APPROVED	HOENIG	4-21-76	H7
REL'D FOR	A.S. Moss	5-3-81	H7

TOLERANCE (UNLESS OTHERWISE NOTED)
X ± ___ DEC. ± ___ ANGULAR ± ___
XX ± ___ DEC. ± ___ FINISH ___

SCALE	TOTAL SHEETS	DRAWING NO	SHEET	REV. NO
NONE	16	103Y-223023	D	1

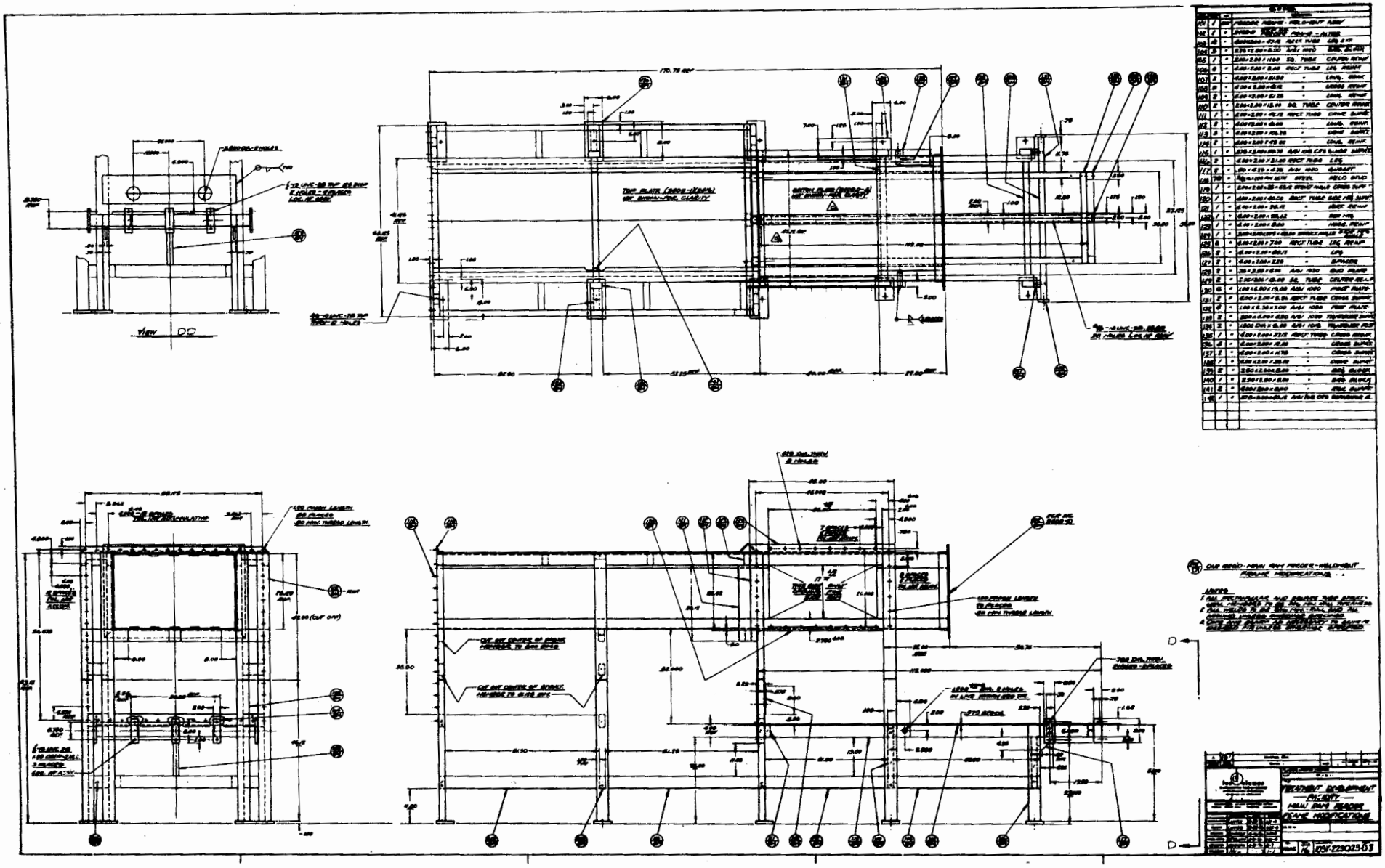
VIEW DD
TOP PLATE
NOTES
1. ALL RECTANGULAR AND SQUARE TUBE ASTM
2. ALL WELDS TO BE
3. ALL RECTANGULAR AND SQUARE TUBE TO
4. CONTACT THE ENGINEERING DEPARTMENT
TESTBELT DEVELOPMENT
FACILITY
MAIN BAY FRAME
FINAL INSPECTION
Inductotherm
Date
Drawn
Checked
Approved
Scale
Size
Dwg. No.
03V-229025-03

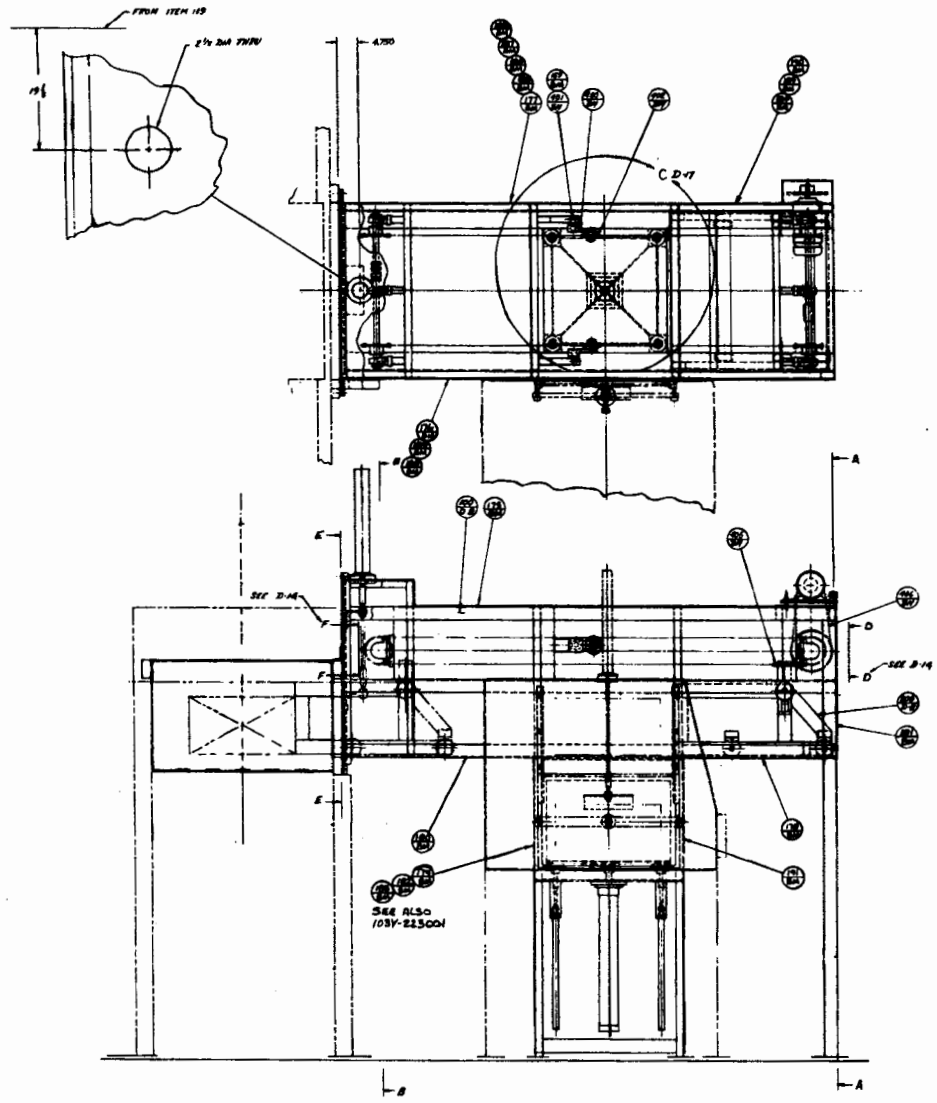

BILL OF MATERIAL			
ITEM NO.	QTY.	PER	DESCRIPTION
100	1	ASSY	MAIN FRAME ASSY
169	2	"	TENSIONER RETAINING SHAFT
175	1	"	TOP PLATE
176	1	"	LEFT SIDE PLATE
177	1	"	RIGHT SIDE PLATE - DISCHARGE END
178	1	"	BOTTOM PLATE - FEED END
179	1	"	LOADING AREA MOUNTING FLANGE
180	1	"	BOTTOM PLATE - DISCHARGE END
181	1	"	END PLATE
182	1	"	LOADING AREA PLATE
183	1	"	LOADING AREA PLATE GASKET
184	1	"	RIGHT SIDE PLATE - FEED END
185	2	"	CHAIN ACCESS PLATE
186	2	"	CHAIN ACCESS PLATE GASKET
187	1	"	INSPECTION PLATE
188	1	"	INSPECTION PLATE GASKET
189	1	"	ACCESS PLATE
190	1	"	ACCESS PLATE GASKET
191	1	"	LOADING AREA PLATE - WELDED
200	1	ASSY	FEEDER RAM ASSEMBLY
400	2	ASSY	ADJUSTABLE DRIVE TIGHTNER, BROWNING #BATN2
401	4	"	HEX. SOC. SET SCREW 1/4-20 UNC-2A x 1 1/2" LONG
402	2	"	IDLER SPROCKET, BROWNING # H1150 BIT
405	2	ASSY	#50 RIVETED CHAIN (2) 10' SECTIONS WITH 2 CONNECTING LINKS - MAKE UP IN 17'-9¾" SECTION
406	1	ASSY	#50 RIVETED CHAIN 58" LONG INCLUDING CONNECTING LINK

SEE NOTE 1

NOTES:

1. ENCLOSURE DETAILS - SEE D4, D24, D25, & D26.

REVISIONS	DATE	DRAWN BY	CHECKED BY	APPROVED BY
ORIGINAL ISSUE	—	—	—	—

CLASSIFICATION OF DRAWING: UNC

PART: UNC TITLE BLOCK: UNC

TITLE: TREATMENT DEVELOPMENT FACILITY RAM FEEDER SYSTEM SIDE RAM & ELEVATOR

	SIGNATURE	DATE	GROUP
DRAWN BY	CARPER	2-26-76	N2-4
DESIGN	CARPER	2-26-76	N2-4
CHECKED	QUINTER	6-9-76	N2-4
PROJ. ENGR.	O'HANNA	6-9-76	N2-4
APPROVED	KAUMA	6-9-76	N-7
RELEASED	[illegible]	[illegible]	N1

TOLERANCE (UNLESS OTHERWISE NOTED)

SCALE: NONE | TOTAL SHEETS: 26 | DRAWING NO. 103Y-223024 | SHEET NO. D-1

BILL OF MATERIAL			
PART NO.	QTY	PER	DESCRIPTION
407	1	ASSY	SPROCKET, BROWNING "50PS0-01-1 1/16 BORE
408	1	1	MOTOR, EXISTING
409	36		1/2-13 UNC-2B STEEL ACORN NUT
410	36		1/2-STEEL FLAT WASHER
411	36		1/2-STEEL SPLIT LOCK WASHER
412	5		SOC. HD. CAP SCREW 1/2-13 UNC-2A X 1 1/2" LONG
500	1	ASSY	CHAIN GUARD

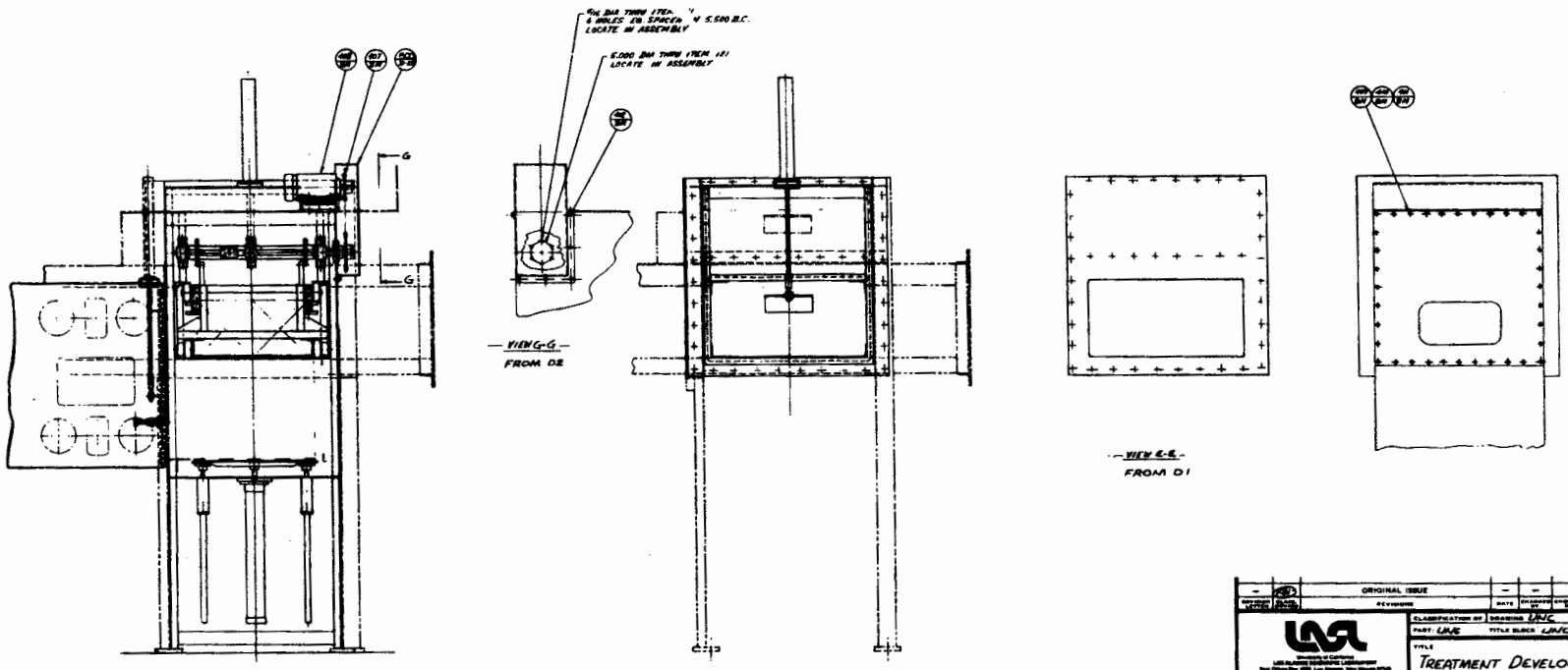

		ORIGINAL ISSUE			
		REVISIONS	DATE	DRAWN BY	CHECKED BY	APPROVED BY

LAVC

CLASSIFICATION OF DRAWING: UNC

PART: UNC TITLE BLOCK: LAVC

TITLE: TREATMENT DEVELOPMENT FACILITY RAM FEEDER SYSTEM SIDE RAM & ELEVATOR

	SIGNATURE	DATE	GROUP
DRAWN BY	Campos	2-26-76	W/F-4
DESIGN	Campos	2-26-76	W/F-4
CHECKED	Gomez	6-2-76	W/F-4
PROJ. OFFICE	McNaul	6-2-76	W/F-4
APPROVED	Kanaya	6-2-76	U-1
RELEASE	A. Nelson	2-27-76	[illegible]

TOLERANCE - (UNLESS OTHERWISE NOTED)

.X ± — .XX ± — .XXX ± — ANGULAR ± —

.X ± — .XXX ± — FINISH —

SCALE — TOTAL SHEETS 26 — DRAWING NO 1031-223024 — SHEET NO D-2

ZONE

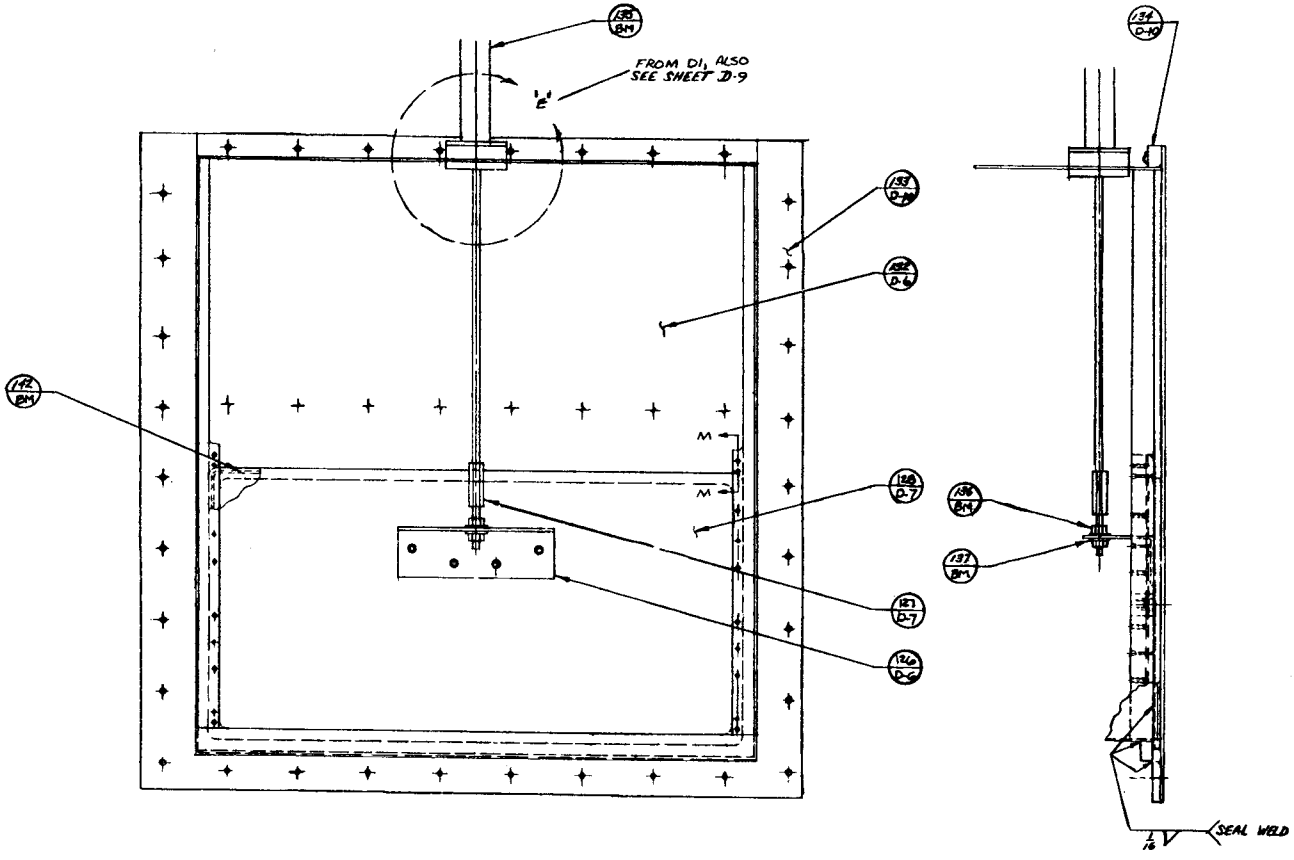

FIRE DOOR ASSEMBLY
SEE VIEW "B-B" SHT D2

SEE NOTE 2

PART NUMBER	QUANTITY REQUIRED	MATL	DESCRIPTION
195	1	NOTE	OPTIONAL-MILLER OR EQUAL AIR CYLINDER, SQUARE FLANGE MOUNTED STYLE BB, 2" BORE, ROD END STYLE SM, 10" STROKE SERIES 6K
196	2	1	1/4-18 UNF-2B HEX NUT SST
197	2	1	1/4 LP. FLAT WASHER SST
192	AR.		.103 DIA. O'RING STK. NEOPRENE (NYLOK)
171	12	"	SPRING PLUNGER VLIER # S56
172	8	"	SOC HD CAP SCREW-BRASS #6-32 UNC-2A X 1 1/4
173	2		PRESSURE RAILS

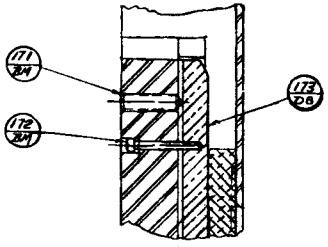

SECTION M-M
FULL SCALE

NOTES:

1. STANDARD CYLINDER EXCEPTION WILL BE "W" DIM. OF 4.6" & CUSHIONS BOTH ENDS OF STROKE.

REVISION LETTER	ZONE	REVISIONS	DATE	CHANGED BY	CHECKED BY	APPROVED BY
A		ORIGINAL ISSUE				

los alamos scientific laboratory of the University of California

CLASSIFICATION OF DRAWING: PART unclas. TITLE BLOCK unclas.

TITLE: TREATMENT DEVELOPMENT FACILITY
RAM FEEDER SYSTEM.
FIRE DOOR ASSEMBLY

TOLERANCES - UNLESS OTHERWISE NOTED: FRACTIONAL ±, DECIMAL ±, ANGULAR ±

	SIGNATURE	DATE	GROUP
DESIGNED	CHAPPER	5-28-75	W3-7
DRAWN	J. TRUJILLO	4-28-75	W7K-4
CHECKED	[illegible]	5-27-75	W3-4
PROJ. ENGR.	[illegible]	4-28-75	W7-4
APPROVED	[illegible]	4-28-75	A-7
RELEASED	A. SALAZAR	5-3-85	A7

NO. REQD

SCALE 1/4 | DATE 2-6 | DRAWING NO. 103Y-273024 | SHEET NO. D 5

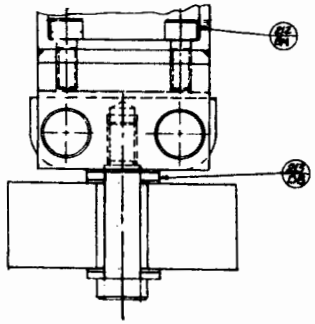

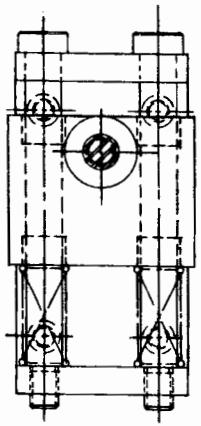

VIEW T-T

SCALE: FULL

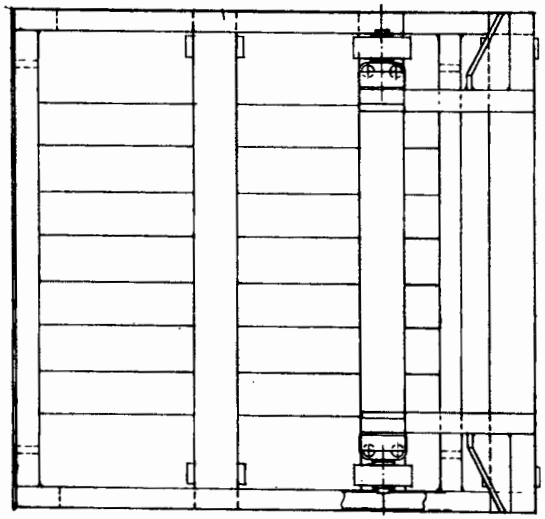

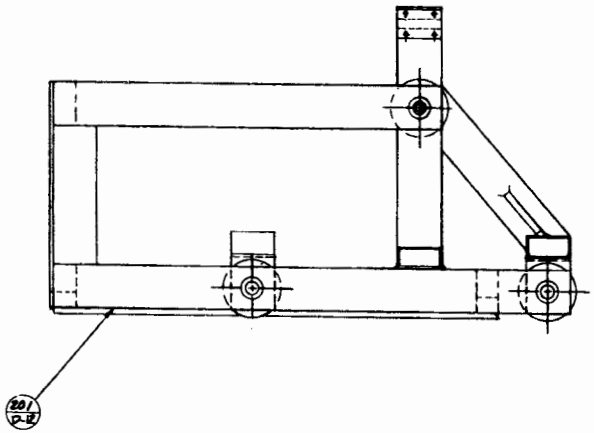

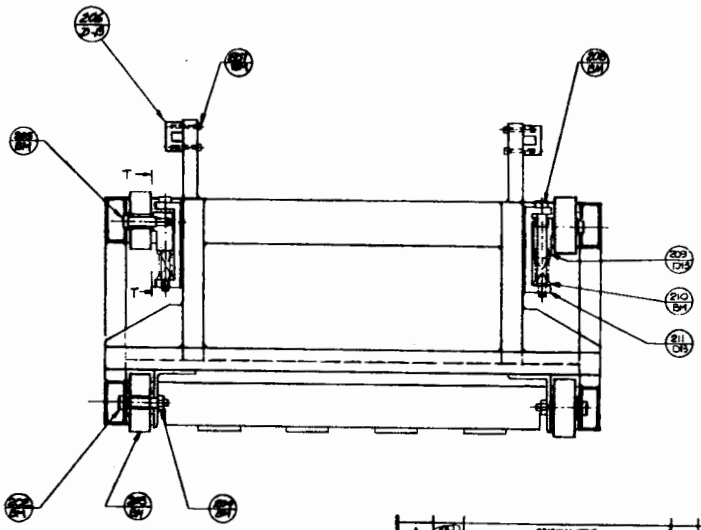

200/01 FEEDER RAM ASSEMBLY
1 REQ'D.

BILL OF MATERIAL

PART NUMBER	QUANTITY	MAT	DESCRIPTION
201	1	ASSY	WELDMENT
202	2		STRIPPER BOLT 3/8 DIA X 2 1/4 DANLY # 9-1018-56
203	4		WHEELS - PRESSED STEEL WIL-MAT 4" X 1 1/2 # E96-1-4 N
204	4		HEX NUT SPACE 1/2-13 UNC-2B
205	2		STRIPPER BOLT 3/8 DIA X 2 DANLY # 9-1016-56
206	2		CHAIN ARRESTOR
207	8		SOC HD. CAP SCREW 1/4-20 UNC-2A X 1 1/2
208	4		STRIPPER BOLT 3/8 DIA X 5 1/2 DANLY # 9-1044-56
209	2		CARRIER BLOCK ASSY.
210	4		DIE SPRING DANLY # 9-2010-31
211	2		CHANNEL
212	8		SOC HD CAP SCREW 3/8-16 UNC-2A X 3/8
213	12	ASSY	WASHER, BRASS

REVISION LETTER	REVISION NUMBER	REVISIONS	DATE	DRAWN BY	CHECKED BY	APPROVED BY
A	00	ORIGINAL ISSUE				

Los Alamos Scientific Laboratory of the University of California

CLASSIFICATION OF DRAWING: UNC

PART: UNC TITLE BLOCK: UNC

TITLE: TREATMENT DEVELOPMENT FACILITY
RAM FEEDER SYSTEM
SIDE RAM
FEEDER RAM

	SIGNATURE	DATE	SERIAL
DRAFTSMAN	[illegible]	9-6-62	VD-1
ENGINEER	[illegible]	9-6-62	VD-1
ENGINEER	[illegible]	9-6-62	VD-1
PROJ. ENGR.	[illegible]	10-9-62	VD-1
APPROVER	[illegible]	10-9-62	VD
APPROVER	[illegible]	3-2-67	VT

SCALE: FULL SHEET: 26 DRAWING NO. 103Y-223024 REV. D-11

PART NUMBER			PARTS LIST	
PREFIX NUMBER	FIRST DIGIT	SUFFIX LETTER	DESCRIPTION	

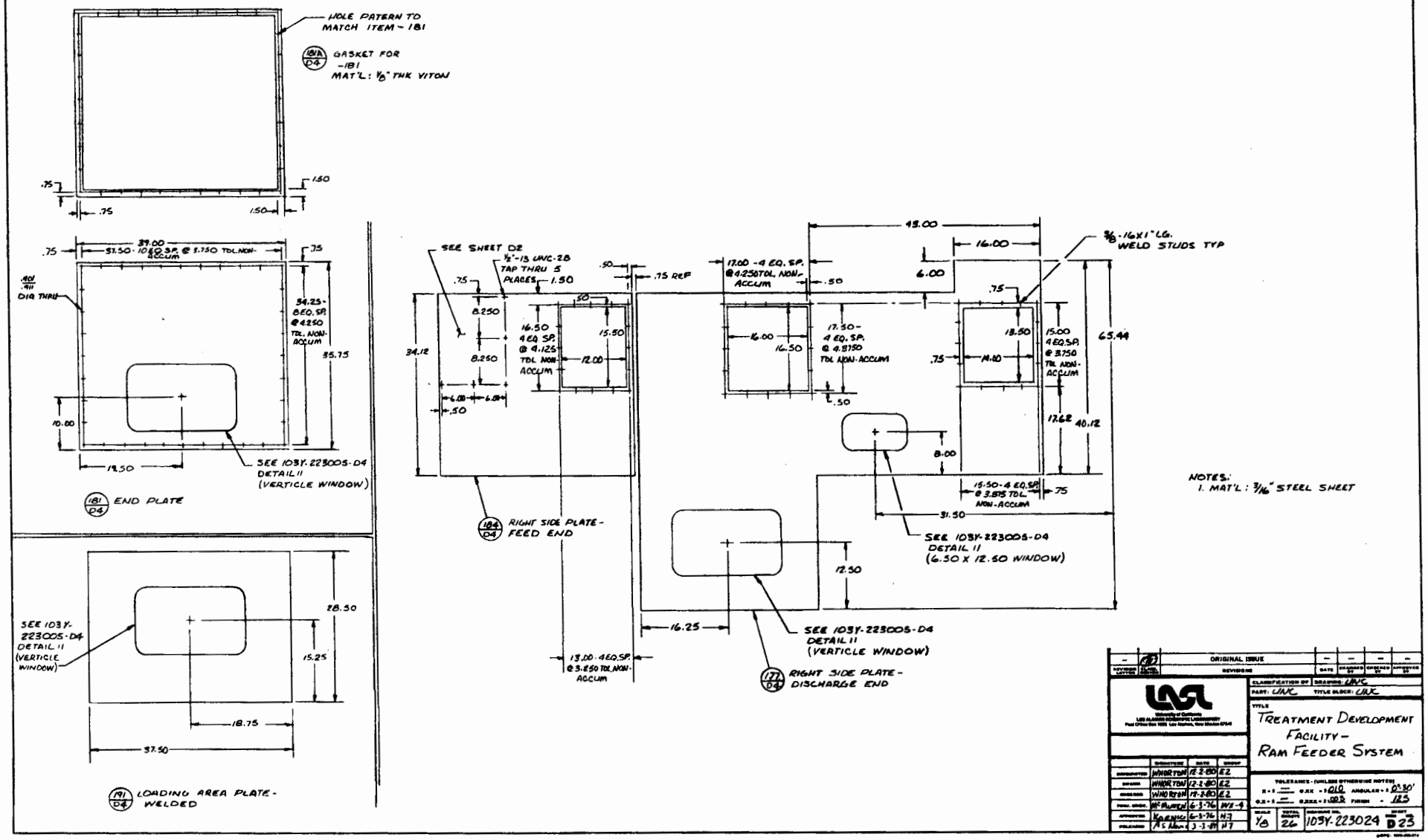

NOTES:
1. MAT'L: 3/16" STEEL SHEET

REVISION LETTER	REVISION NUMBER	REVISIONS	DATE	DRAWN BY	CHECKED BY	APPROVED BY
–	00	ORIGINAL ISSUE	–	–	–	–

University of California
LOS ALAMOS SCIENTIFIC LABORATORY
Post Office Box 1663 Los Alamos, New Mexico 87544

CLASSIFICATION OF DRAWING: UNC
PART: UNC TITLE BLOCK: UNC

TITLE
TREATMENT DEVELOPMENT FACILITY - RAM FEEDER SYSTEM

	SIGNATURE	DATE	GROUP
DESIGNED	WNORTON	12-2-80	E2
DRAWN	WNORTON	12-2-80	E2
CHECKED	WNORTON	12-2-80	E2
TOOL ENGR.	McPLUMER	6-3-76	W2-4
APPROVED	KRENNIG	6-3-76	H-7
RELEASED	A S Mon	3-3-81	H7

TOLERANCES - (UNLESS OTHERWISE NOTED)
X = ± ..... 0.XX = ± .010 ANGULAR = ± 0°30'
0.X = ± ..... 0.XXX = ± .005 FINISH - 125

SCALE	TOTAL SHEETS	DRAWING NO.	SHEET NO.
1/8	26	103Y-223024	D23

PART NUMBER			PARTS LIST
PREFIX NUMBER	SUFFIX NUMBER	REV CODE	DESCRIPTION

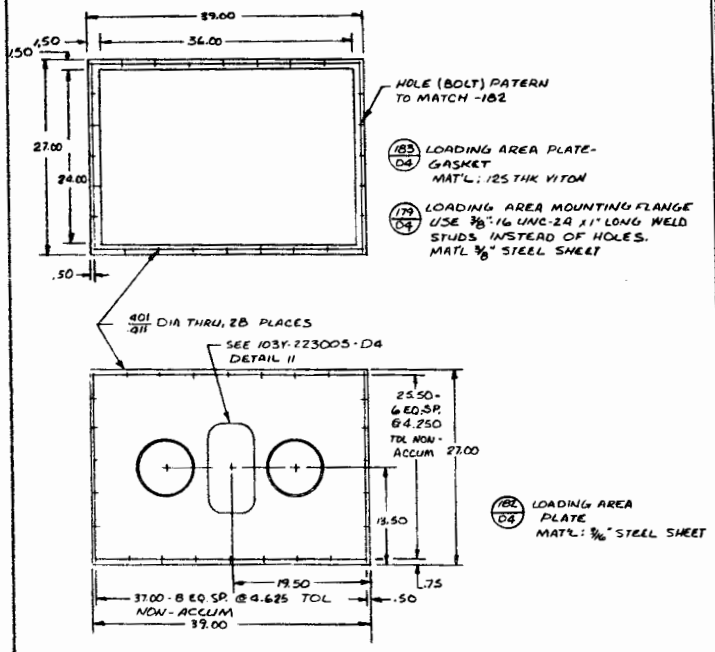

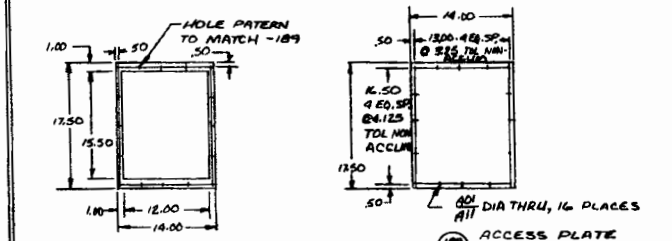

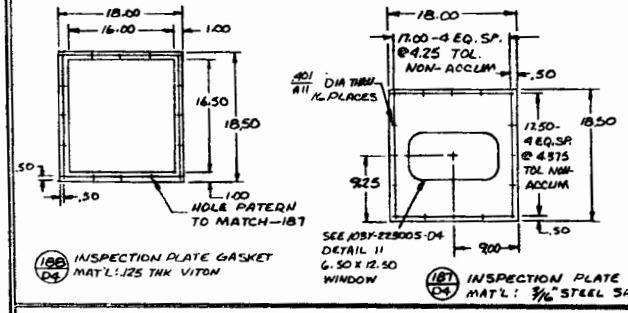

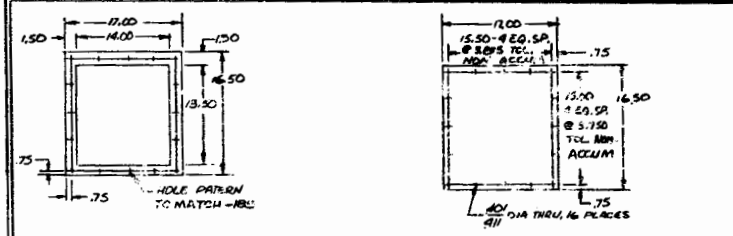

—	EHA	ORIGINAL ISSUE	—	—	—	—
REVISION LETTER	REVISION SYMBOL	REVISIONS	DATE	CHANGED BY	CHECKED BY	APPROVED BY

University of California
LOS ALAMOS SCIENTIFIC LABORATORY
Post Office Box 1663 Los Alamos, New Mexico 87544

CLASSIFICATION OF DRAWING: UNC
PART: UNC TITLE BLOCK: UNC

TITLE
TREATMENT DEVELOPMENT FACILITY
RAM FEEDER SYSTEM

	DESIGNATION	DATE	GROUP
DRAFTING	[illegible]	12-2-80	E2
DESIGN	[illegible]	12-2-80	E2
CHECKING	[illegible]	12-7-80	E2
PROJ. ENGR.	[illegible]	6-3-76	WX-9
APPROVED	[illegible]	6-5-76	H7
RELEASED	[illegible]	7-7-81	H7

TOLERANCE - (UNLESS OTHERWISE NOTED)
X-S — 0.XX ± .010 ANGULAR ± 0°-30'
0.X-S — 0.XXX ± .005 FINISH .125

SCALE	SHEET SIZE	DRAWING NO.	REVISION NO.	SHEET NO.
1/8	26	103Y-223024	D	26

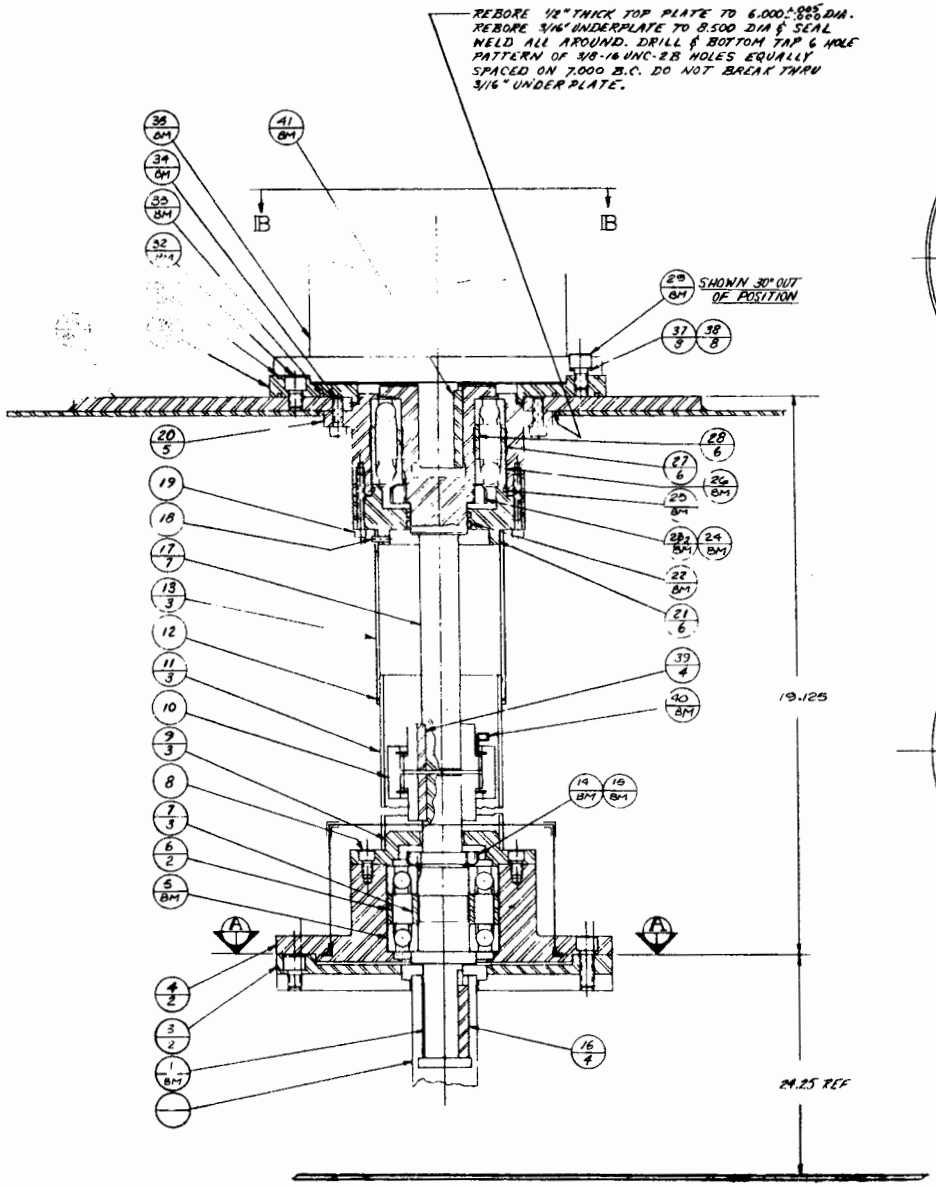

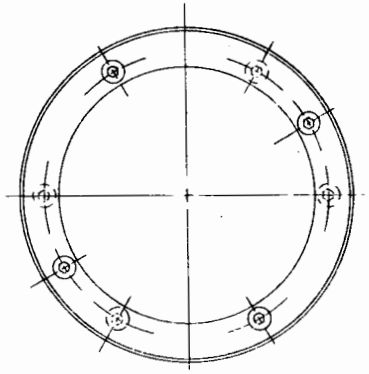

- VIEW BB -

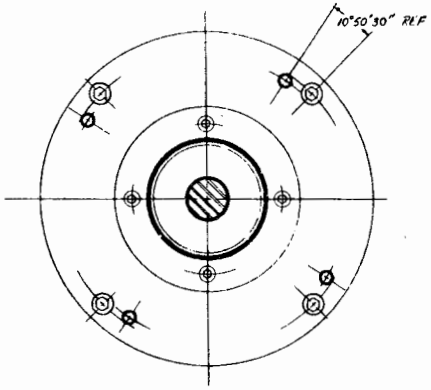

- SECTION A-A -

NOTE:
1. ITEM 40, SPECIAL CLIP, CANNOT BE MADE UNTIL THE SPIRO LOX RETAINING RING IS REMOVED FROM THE SIER-BATH COUPLING, ITEM 10.
2. * INDICATES ITEMS DETAILED ON SHEETS INDICATED ON ASSEMBLY.

REVIEWER

CLASS UNC

DATE 7/9/62

PART NUMBER		DESCRIPTION
	1	KEY .3125 SQ. KEYSTOCK 2.75 LG
* 40	1	SPECIAL CLIP
* 39	2	KEY
* 38	4	SEALING WASHER
* 37	4	WASHER
36	1	GLOVE BOX ENG E-518
35	1	MOTOR BALDOR # 213 T.D. (REMOVED FROM SHRED PAX)
34	6	SOC. HD. CAP SCREW 3/8-16 UNC-2A X 1"
33	1	O RING 8 X 8 1/4 X 1/8 MFR # 266
32	4	SOC. HD. CAP SCREW 7/16-14 UNC-2A X 5/8
31	2	O RING 11 X 11 1/4 X 1/8 MFR # 276
* 30	1	SEALING FLANGE
29	4	SOC. HD. CAP SCREW 1/2-13 UNC-2A X 3/4
* 28	1	SPACER, INNER
* 27	1	SPACER, OUTER
26	2	BEARING, SHIELDED MRC # 213 MFR
25	1	O RING 4 1/2 X 4 1/4 X 1/8 MFR # 246
24	1	LOCK NUT N-13
23	1	LOCK WASHER W-13
22	2	O RING 2 X 2 1/8 X 1/16 MFR # 033
* 21	1	SEALING HOUSING
* 20	1	BEARING HOUSING
19	4	SOC. HD. CAP SCREW 1/4-20 UNC-2A X 2
18	3	PIN 3/16 DIA X 5/8
* 17	1	JACK SHAFT
* 16	1	KEY
15	1	LOCK NUT N-09
14	1	LOCK WASHER W-09
* 13	1	GUARD, UPPER
12	2	"O" RING 4 1/4 X 4 3/8 X 1/16 MFR # 046
* 11	1	GUARD, LOWER
10	1	GEAR COUPLING SIER BATH NYFLEX (1.5[redacted])
* 9	1	RETAINER CAP
8	4	SOC. HD. CAP SCREW 3/8-16 UNC-2A X 1/2
* 7	1	SPACER, INNER
* 6	1	SPACER, OUTER
5	2	BEARING, SHIELDED MRC # 303 MFR
* 4	1	BEARING HOUSING
* 3	1	MATING FLANGE (EXISTING ON SHRED-PAX)
* 2	1	ADAPTER
1	1	SHRED PAX A2-7

BILL OF MATERIAL

los alamos scientific laboratory
engineering department
UNIVERSITY OF CALIFORNIA — LOS ALAMOS, NEW MEXICO

	DESIGNER	DATE	DRAFT
DESIGN	CAMPBELL	12-8-15	WX-4
DRAWN	CAMPBELL	12-8-15	WX-4
CHECKED	[illegible]	4-20-16	WX-4
PROJ. ENG.	[illegible]	4-21-16	WX-4
APPROVED	[illegible]	6-8-16	H-7
APPROVED	D.S. MAUU	3-3-61	H-7

TITLE
TREATMENT DEVELOPMENT FACILITY
SHREDDER ASS'Y

PART NO.
B.A. NO.
L.J. NO.
SCALE 1/2
TOTAL SHEETS 8
DRAWING NO. 103Y-223029D
SHEET NO. 1
REV

679

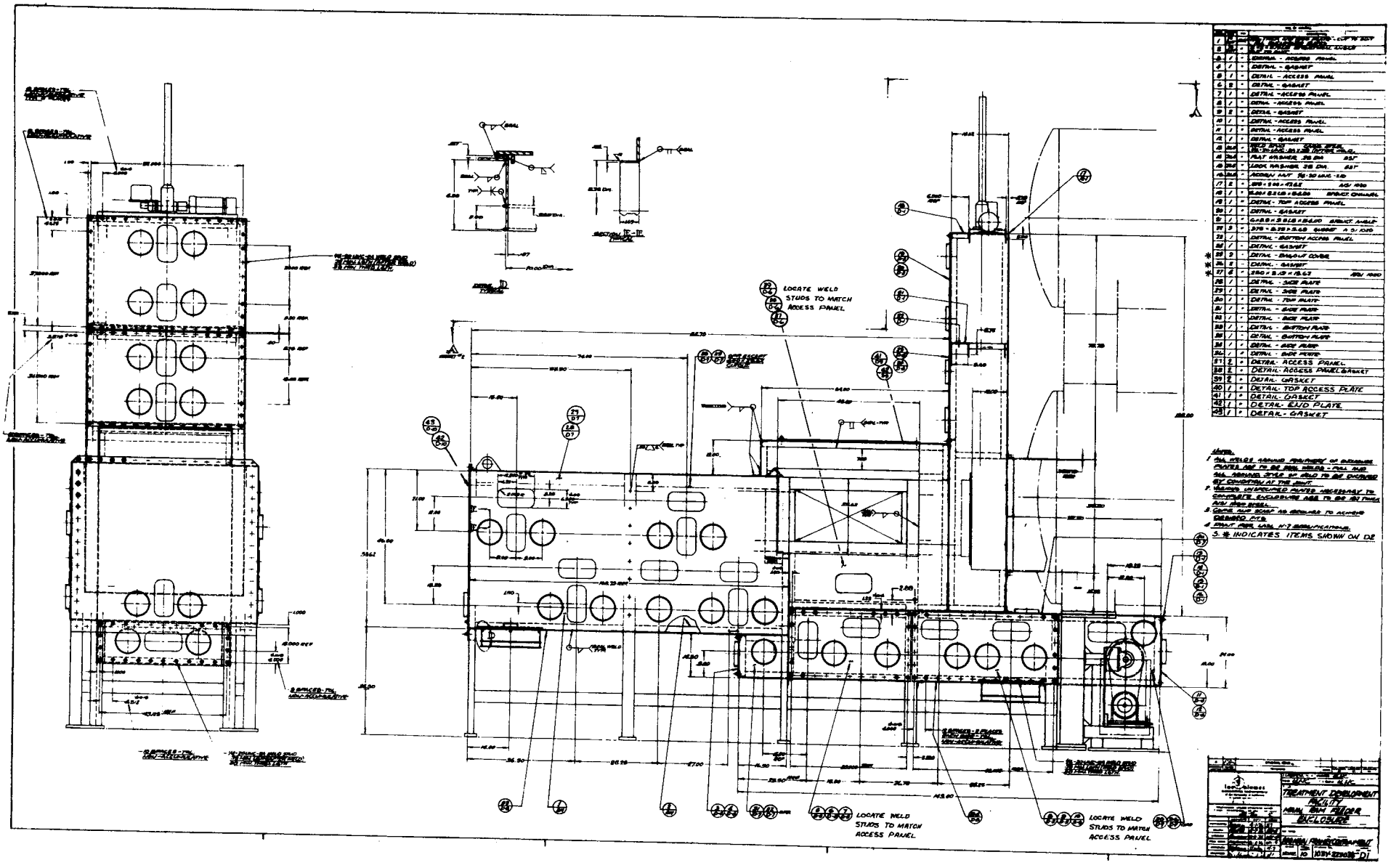
LOCATE WELD STUDS TO MATCH ACCESS PANEL
LOCATE WELD STUDS TO MATCH ACCESS PANEL
LOCATE WELD STUDS TO MATCH ACCESS PANEL
DETAIL - ACCESS PANEL
DETAIL - GASKET
DETAIL - TOP ACCESS PANEL
DETAIL - BOTTOM ACCESS PANEL
DETAIL - EXHAUST COVER
DETAIL - SIDE PLATE
DETAIL - TOP PLATE
DETAIL - BOTTOM PLATE
DETAIL - END PLATE
DETAIL - ACCESS PANEL & GASKET
DETAIL - TOP ACCESS PLATE
NOTES:
1. ALL WELDS HAVING THICKNESS OF DISSIMILAR PLATES ARE TO BE FULL WELDED - FILL AND ALL REMAINING STEEL SHALL BE WELD TO BE DETERMINED BY CONDITION AT THE JOINT.
2. WELDING UNEQUAL PLATES NECESSARY TO COMPLETE ENCLOSURE ARE TO BE 1/8" THICK AND FULL WELD.
3. GRIND OUT SCALE AS REQUIRED TO ACHIEVE DESIRED FITS.
4. PAINT PER SPEC. N°7 SEMI-GLOSS.
5. * INDICATES ITEMS SHOWN ON DE
TREATMENT DEVELOPMENT FACILITY
ARM BM FILTER ENCLOSURE

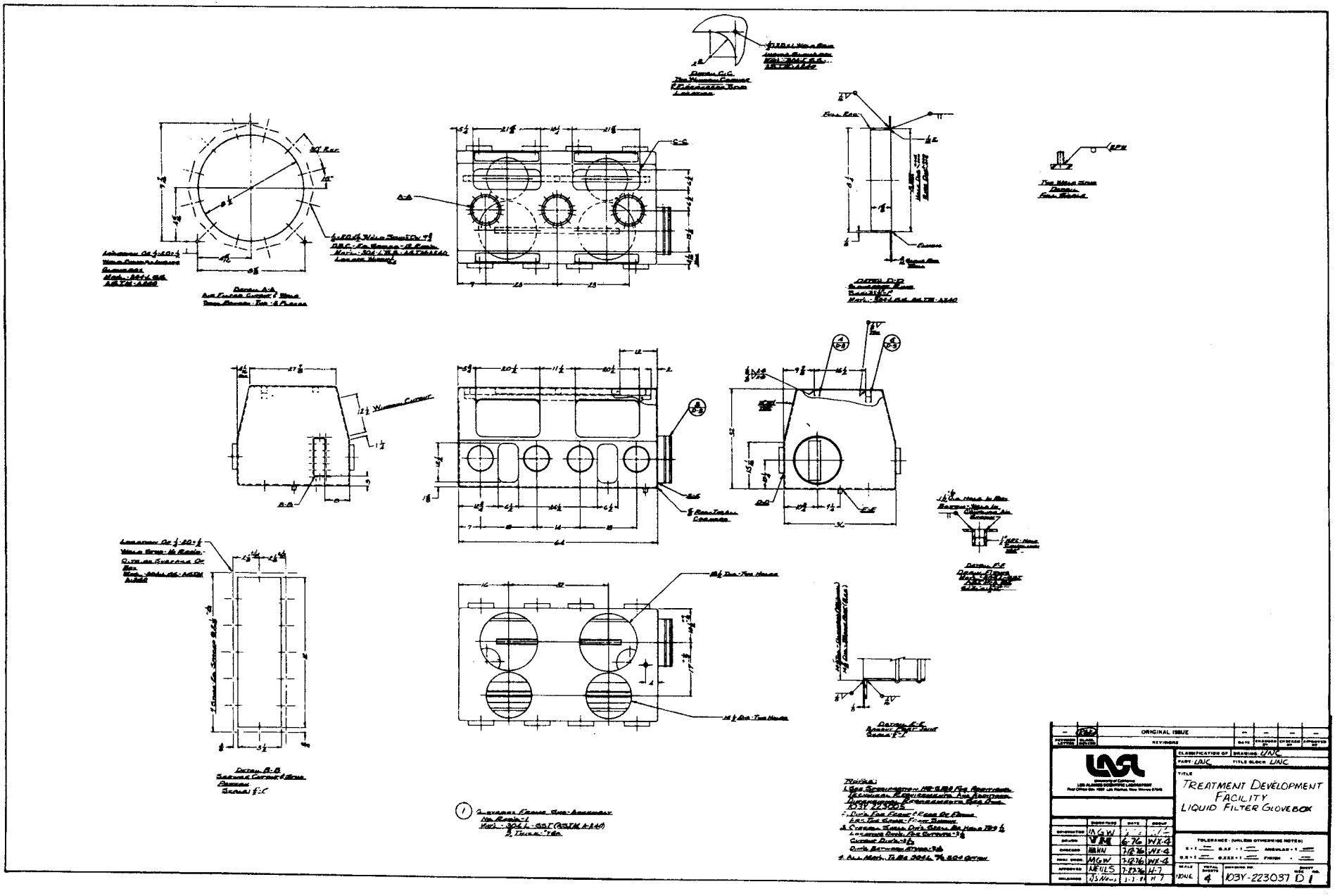
ORIGINAL ISSUE
REVISIONS
University of California
LOS ALAMOS SCIENTIFIC LABORATORY
CLASSIFICATION OF DRAWING: UNC
PART: UNC
TITLE BLOCK: UNC
TITLE
TREATMENT DEVELOPMENT FACILITY
LIQUID FILTER GLOVEBOX
TOLERANCE - (UNLESS OTHERWISE NOTED)
SCALE 4
103Y-223037 D1

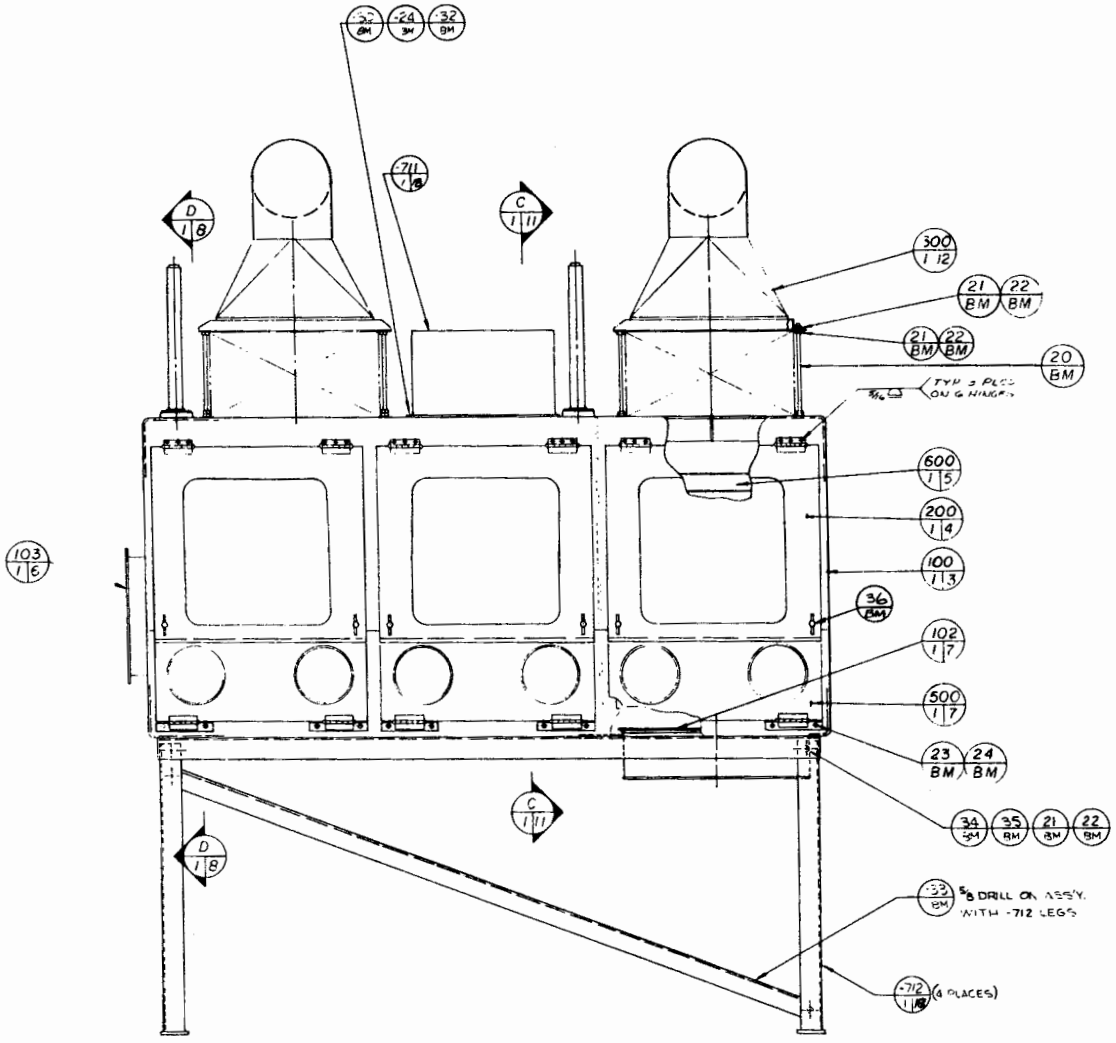

ASSEMBLY

36	6	HANDLE - CAT# 1671A2, McMASTER-CARR
35	10	1/2 LOCK WASHER - SST
34	10	1/2 - 13 UNC x 1 3/4 LG HEX HD CAP SCR - SST
33	1	3 x 3 - 1/4 ANGLE - SST
32	24	1/4 WASHER - SST
30	24	1/4 - 20 UNC HEX NUT - SST
24	32	1/4" LOCK WASHER - SST
23	15	1/4 - 20 UNC (DEEP) ACORN NUT - SST
22	26	1/4" FLAT WASHER - SST
21	34	1/2 - 13 UNC HEX NUT - SST
20	8	1/2" DIA. SST. ROD w/ MIN. 2" LG 1/2 - 13 UNC THD. ON BOTH ENDS.
PART NUMBER	NUMBER REQUIRED	DESCRIPTION

BILL OF MATERIAL

los alamos scientific laboratory
engineering department
UNIVERSITY OF CALIFORNIA — LOS ALAMOS, NEW MEXICO

TOLERANCES - UNLESS OTHERWISE NOTED
FRACTIONAL ± DECIMAL ± ANGULAR ±

	SIGNATURE	DATE	GROUP
DESIGN	[illegible]	[illegible]	[illegible]
DRAWN	[illegible]	[illegible]	ENG-6
CHECKED	Bowman	9-13-74	ENG-6
PROJ. ENGR.	[illegible]	[illegible]	ENG-6
APPROVED	[illegible]	5-15-75	ENG-6
APPROVED	[illegible]	2-3-81	H7

TITLE
TREATMENT DEVELOPMENT FACILITY
ENTRANCE SLOT BOX

PART NO. ASSEMBLY
B.A. NO. 2522 L.J. NO. 4790-50

SCALE 1/8" = 1" | TOTAL SHEETS 18 | DRAWING NO. 103Y-223046 | SHEET NO. D-1 | REV.

REVIEWED [illegible]
C.I.A. [illegible] 2/4/81

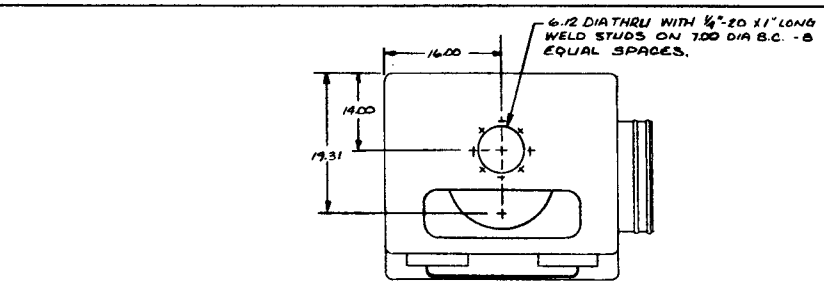

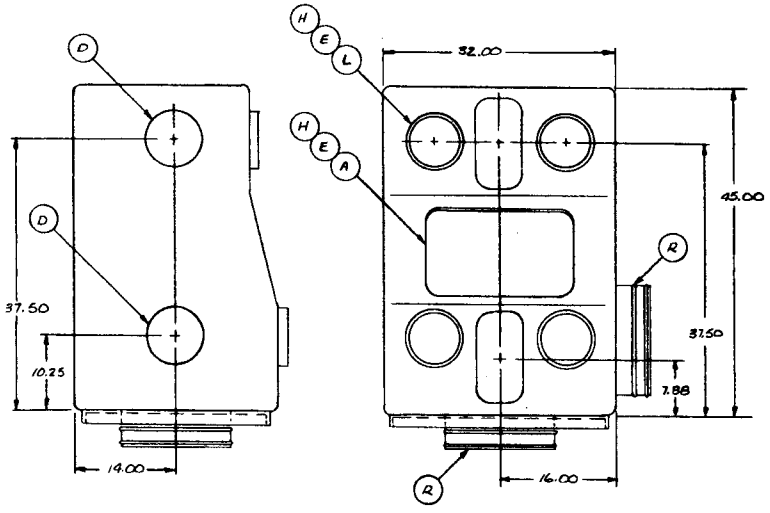

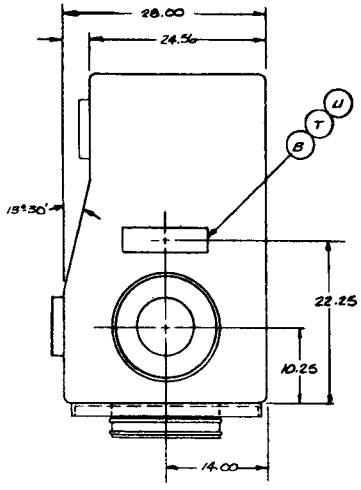

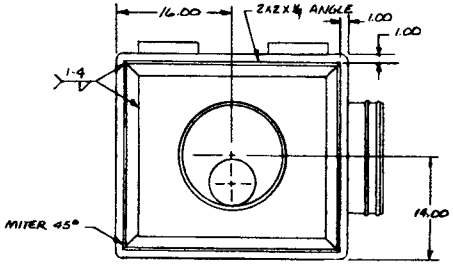

PART NUMBER			PARTS LIST
PREFIX NUMBER	ITEM NUMBER	NUMBER REQD	DESCRIPTION
	1	1	GLOVEBOX (AS SHOWN)
	2	1	FIRESHIELD (22.88 x 7.75)
	3	2	FIRESHIELD (13.75 x 7.75)
	4	1	FIRESHIELD (21.75 x 13.75)
	5	1	SERVICE PORT DOOR (103Y-223005 D9)
	6	1	SERVICE PORT DOOR GASKET (103Y-223005 D9)

—		ORIGINAL ISSUE		—	—	—	—
REVISED LETTER	CLASS. CHANGE	REVISIONS		DATE	CHANGED BY	CHECKED BY	APPROVED BY

University of California
LOS ALAMOS SCIENTIFIC LABORATORY
Post Office Box 1663 Los Alamos, New Mexico 87545

CLASSIFICATION OF DRAWING: UNC
PART: UNC TITLE BLOCK: UNC

TITLE
TDF-ASH PACKAGING GLOVEBOX

	SIGNATURE	DATE	GROUP
DESIGNED	NEULS	7-76	H7
DRAWN	WNORTON	11-80	E2
CHECKED	WNORTON	11-80	E2
PROJ. ENGR.	MGW	7-76	WX-4
APPROVED	NEULS	7-76	H7
RELEASED	ASAKUI	3-3-81	H7

TOLERANCE - (UNLESS OTHERWISE NOTED)
X = ± — 0.XX = ± .010 ANGULAR = ± 0° 30'
0.XX = ± — 0.XXX = ± .005 FINISH - 32

SCALE	TOTAL SHEETS	DRAWING NO.	SHEET NO.
1/8	1	103Y-223049 D	1

A.	DETAIL 1 SHEET 2	GLOVEPORT AND SLOPED WINDOW	103Y-223005D2
B.	DETAIL 2 SHEET 2	SERVICE CUTOUT	103Y-223005D2
C.	DETAIL 3 SHEET 2	TOP WINDOW	103Y-223005D2
D.	DETAIL 4 SHEET 2	AIR FILTER CUTOUT	103Y-223005D2
E.	DETAIL 5 SHEET 2	FIRESHIELD MOUNTING STUD	103Y-223005D2
H.	DETAIL 8 SHEET 3	GLOVEPORT RING	103Y-223005D3
L.	DETAIL 11 SHEET 4	GLOVEPORT AND VERTICAL WINDOW	103Y-223005D4
N.	DETAIL 13 SHEET 4	CORNER RADIUS	103Y-223005D4
R.	DETAIL 16 SHEET 8	14.75" ID BAGOUT PORT	103Y-223005D9
T.	DETAIL 18 SHEET 9	SERVICE PORT COVER	103Y-223005D9
U.	DETAIL 19 SHEET 9	SERVICE PORT GASKET	103Y-223005D9

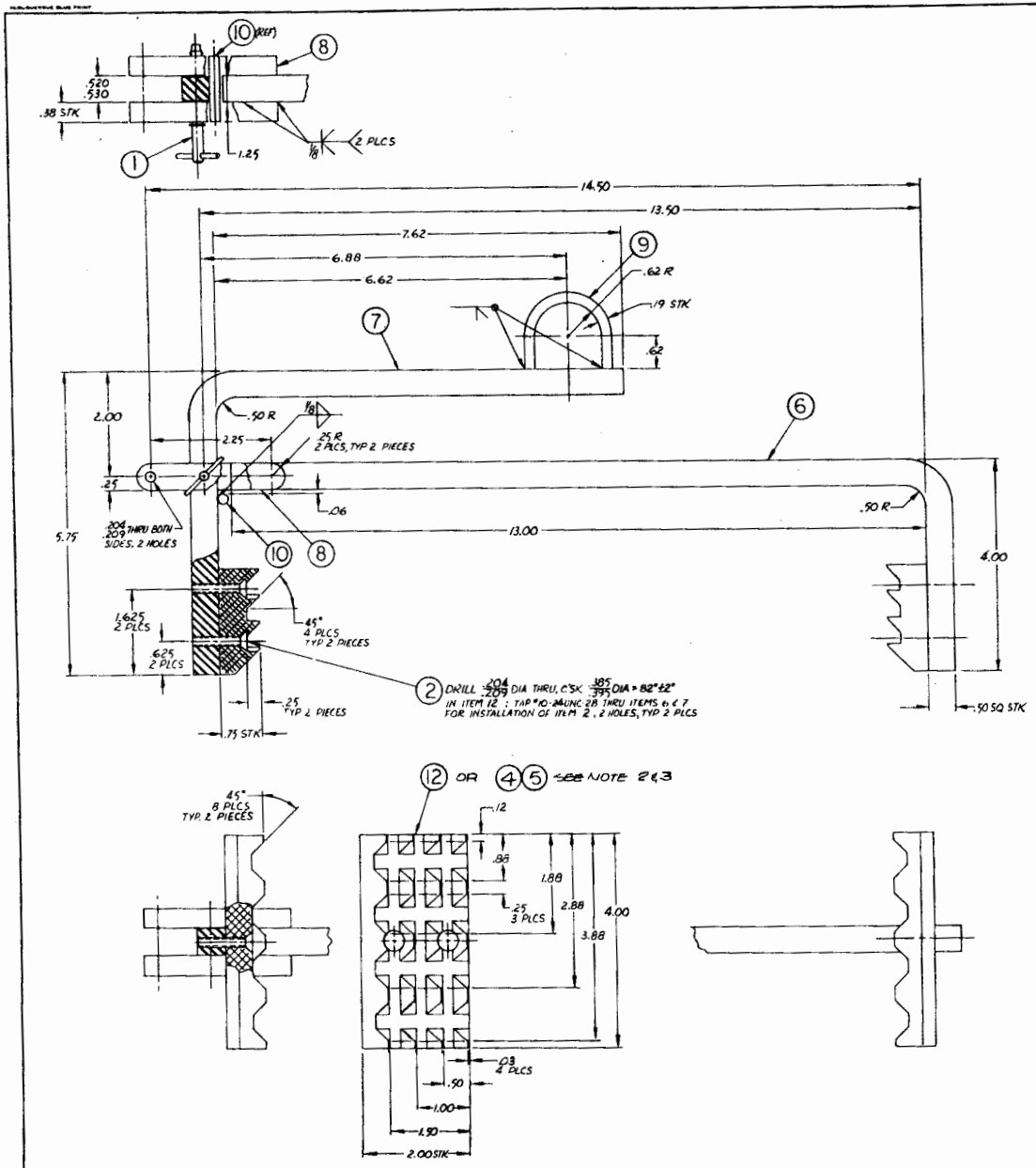

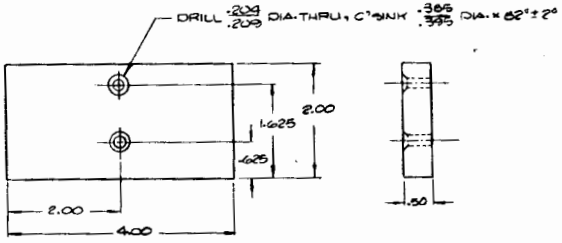

5 OPTION "B" SEE NOTE 3
2 REQ'D.

PART NUMBER	NUMBER REQD.	PER	DESCRIPTION
1	1	ASSY	T-GRIP QUICK RELEASE PIN, 3/16" DIA; 1.3 GRIP LENGTH
2	4		MACHINE SCREW, 82° C'SK, #10-24UNC-2A × 1.00 LG
3			
4	2		NEOPRENE, 2.00" × 4.00" × 1/8" THK.-50 DUROMETER
* 5	2		STEEL BAR, RECTANGULAR 1/2" × 2"
6	1		STEEL BAR, SQUARE, 1/2 × 1/2 (C1019)
7	1		STEEL BAR, SQUARE, 1/2 × 1/2 (C1019)
8	2		STEEL BAR, RECTANGULAR, 3/8 × 1/2 (C1019)
9	1		STEEL BAR, ROUND, 3/16 DIA. (C1019)
10	1		STEEL BAR, ROUND, 3/16 DIA (C1019)
11			
* 12	2	ASSY	ALUMINUM BAR, RECTANGULAR, 3/4 × 2 (6061-T6)
13			
14			
15			

SEE NOTE 2

* SEE NOTE 3

NOTES:

1. MASK PLAIN & TAPPED HOLES & PAINT STEEL PARTS ONLY AS FOLLOWS:
   (A) APPLY PRIMER- AMERCOTE DIMETCOTE 5;
   (B) APPLY PAINT- AMERCOTE Nº 68, COLOR PEARL GRAY.
2. GLUE ITEM 4 TO ITEM 5 AFTER PAINTING
3. ITEMS 4 & 5 MAY BE USED IN PLACE OF ITEM 12, TO GIVE OPTION "B"

REVISION LETTER	CLASS REVISION	REVISIONS	DATE	CHANGED BY	CHECKED BY	APPROVED BY
A		ORIGINAL ISSUE	-	-	-	-

los alamos scientific laboratory of the University of California

CLASSIFICATION OF DRAWING UNC
PART UNC TITLE BLOCK UNC

TITLE
TDF WASTE BOX TONG II

	SIGNATURE	DATE	GROUP
ORIGINATOR	M GW	8/26/96	WX-4
DESIGN	CROCKER	8/26/96	WX-4
CHECKED	HANN	9/9/96	WX-4
PROJ ENGR	M GW	9/9/96	WX-4
APPROVED		9/24/96	WX-7
RELEASED		3-3-97	H7

NO REQD

SCALE 1/1 | TOTAL SHEETS 1 | DRAWING NO 10SY-223053 | SHEET NO 1 OF 1 | REV D

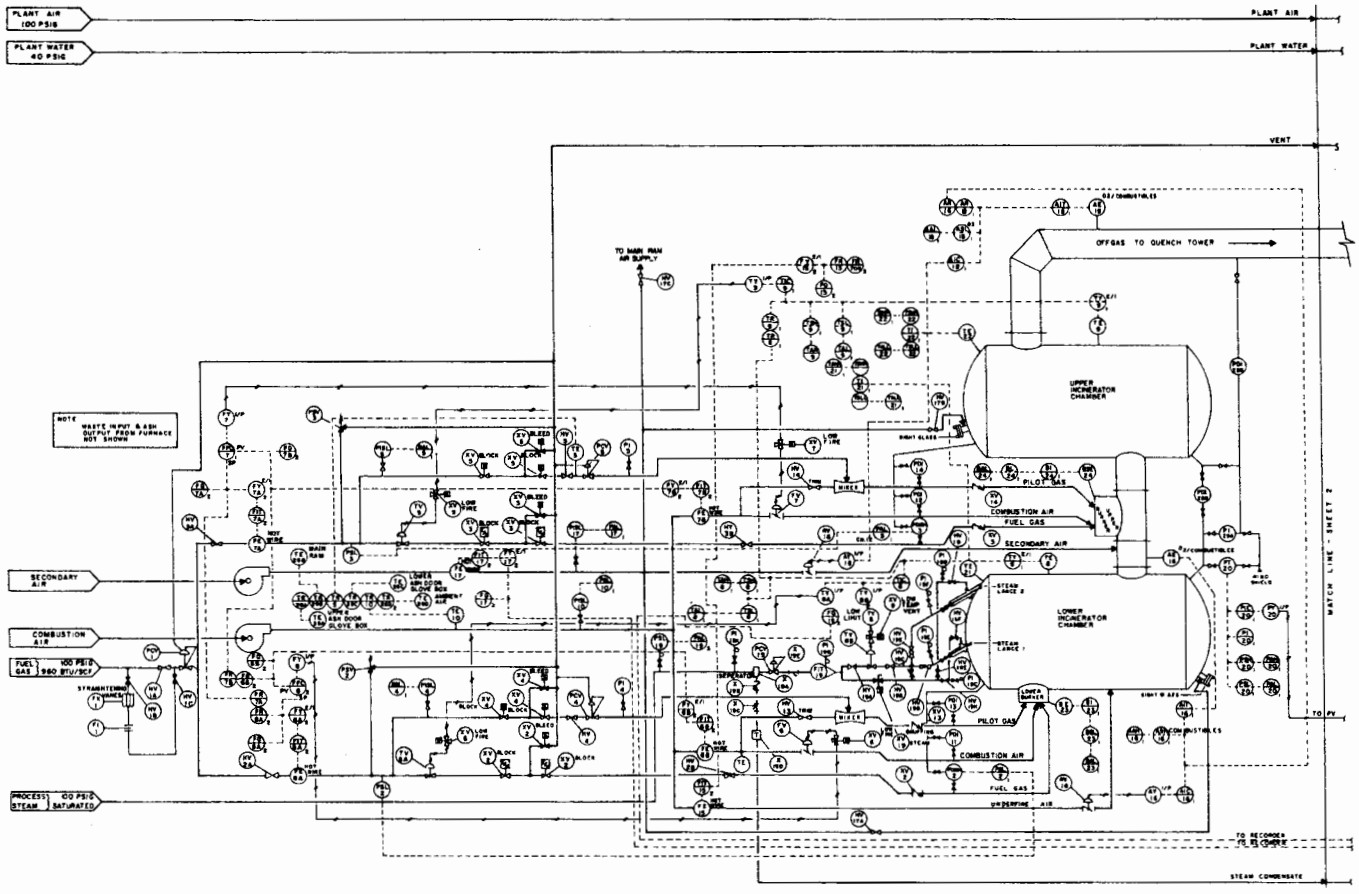

PIPE & INSTRUMENT DIAGRAM CONTROLLED-AIR INCINERATOR

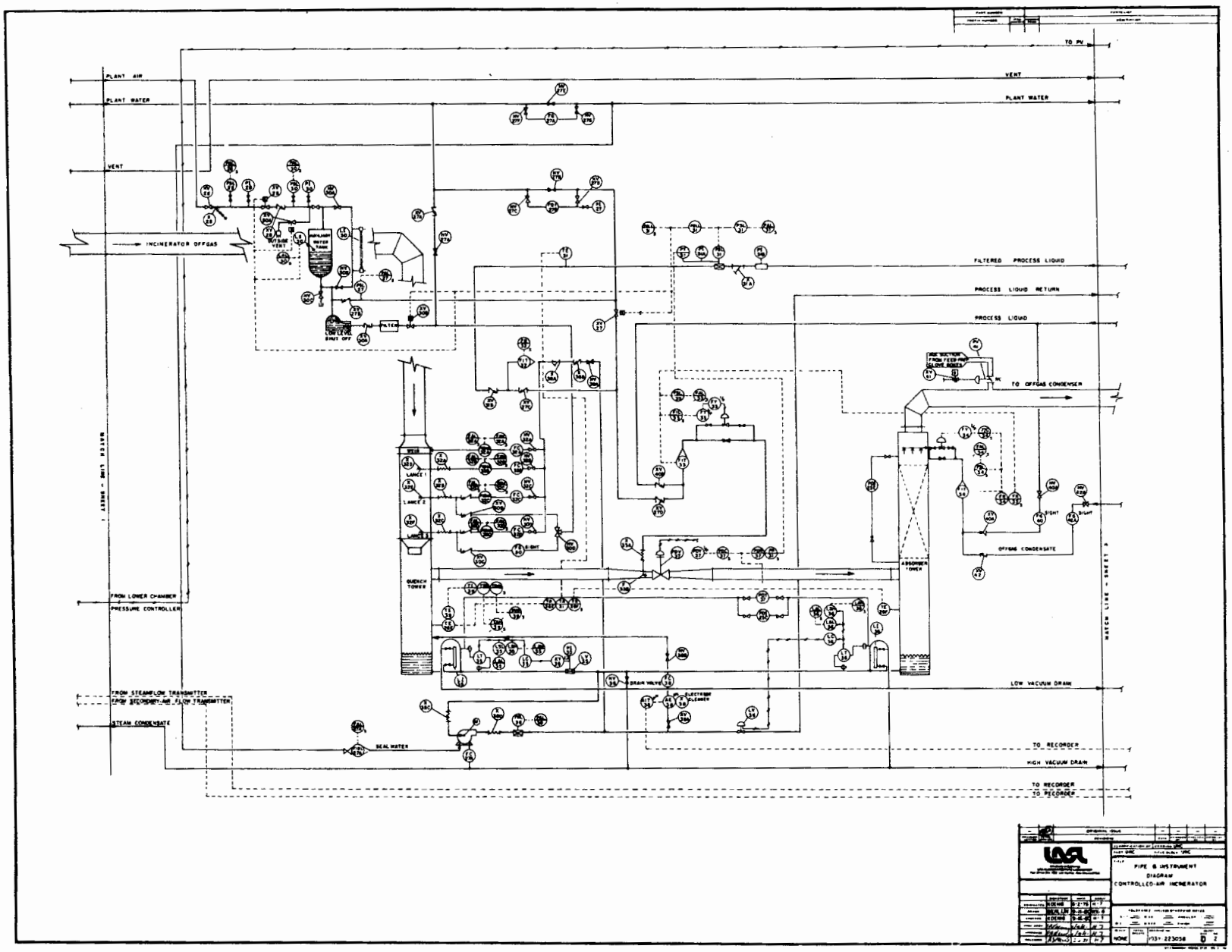
PLANT AIR
PLANT WATER
VENT
INCINERATOR OFFGAS
TO PV
VENT
PLANT WATER
FILTERED PROCESS LIQUID
PROCESS LIQUID RETURN
PROCESS LIQUID
TO OFFGAS CONDENSER
OFFGAS CONDENSATE
QUENCH TOWER
ABSORBER TOWER
FROM LOWER CHAMBER
PRESSURE CONTROLLER
FROM STEAMFLOW TRANSMITTER
STEAM CONDENSATE
SEAL WATER
LOW VACUUM DRAIN
TO RECORDER
HIGH VACUUM DRAIN
TO RECORDER
TO RECORDER
PIPE & INSTRUMENT
DIAGRAM
CONTROLLED-AIR INCINERATOR
NONE
D 2

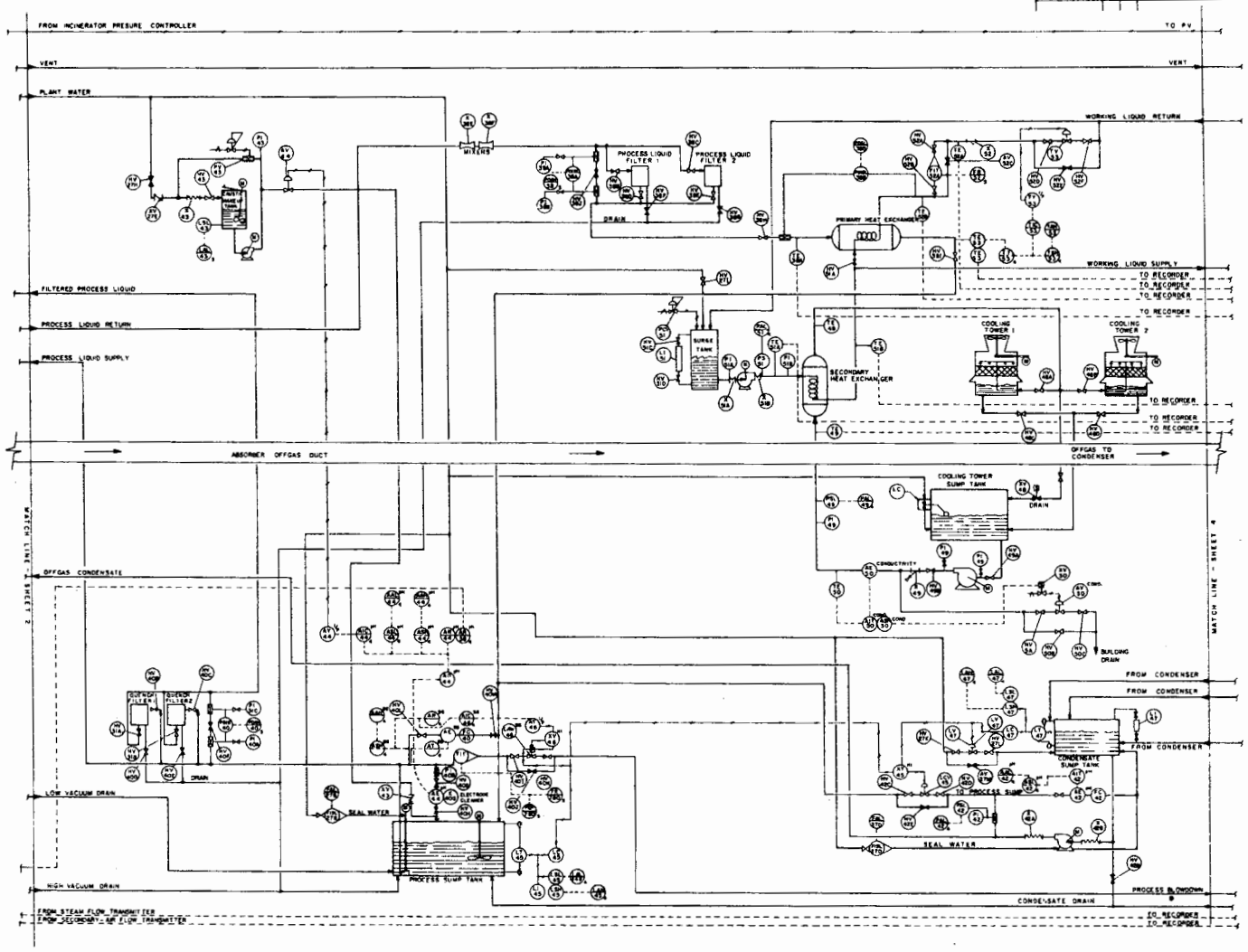

ORIGINAL ISSUE

UNC

PIPE & INSTUMENT DIAGRAM

CONTROLLED-AIR INCINERATOR

NONE

031-223058

D 3

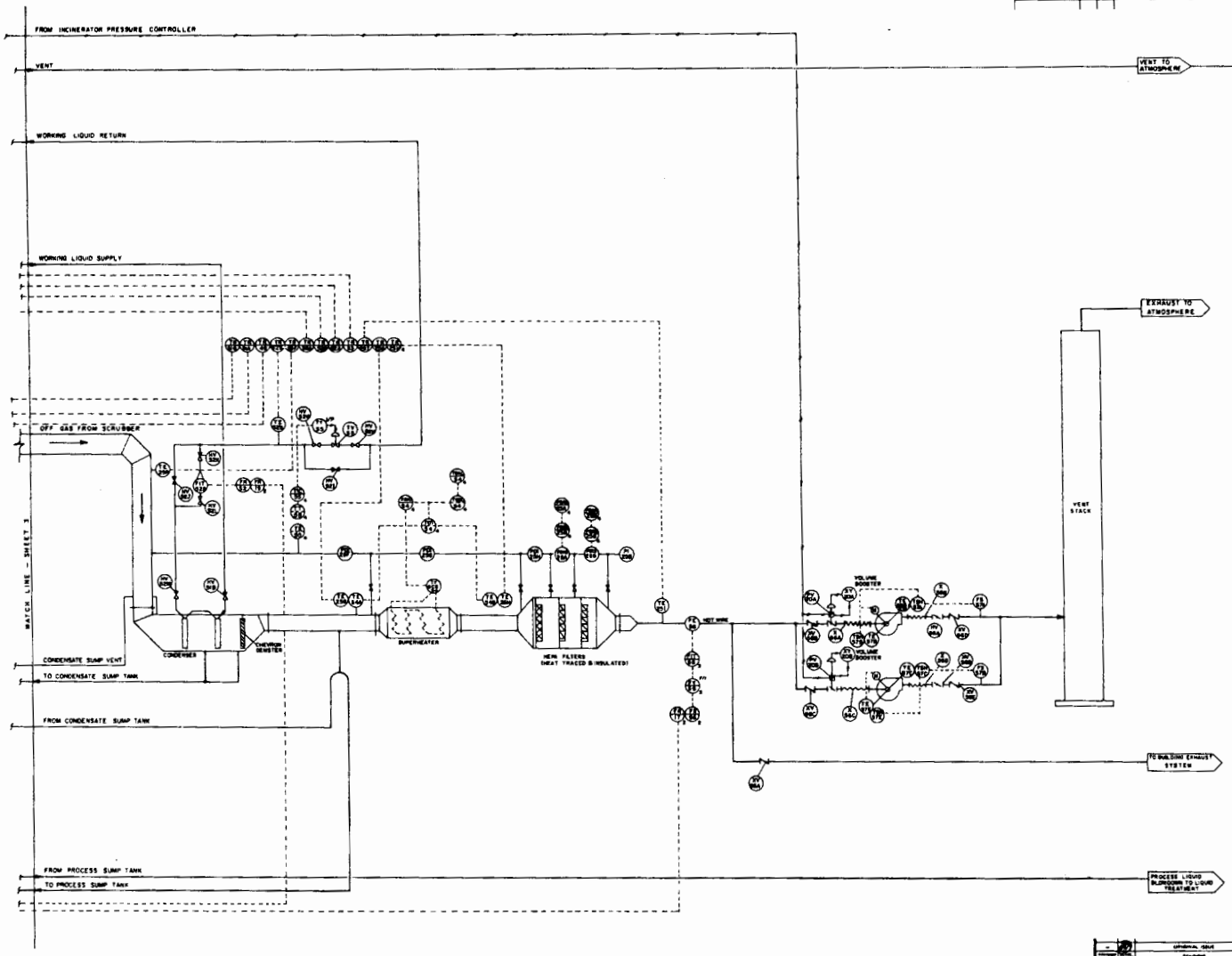

ORIGINAL ISSUE

PART UNC

TITLE

PIPE & INSTRUMENT DIAGRAM

CONTROLLED-AIR INCINERATOR

NONE

103Y-223058

D

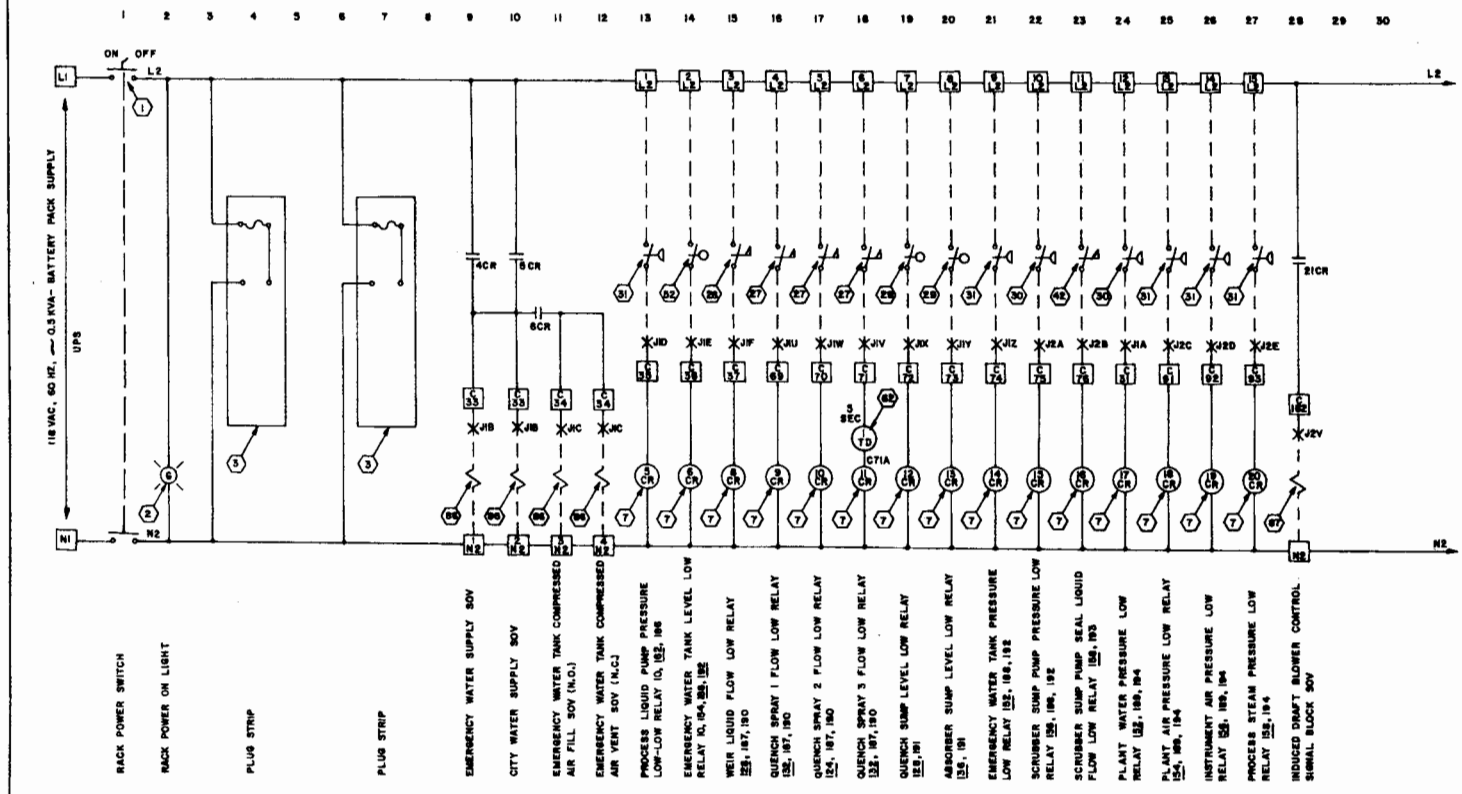

PART NUMBER		PARTS LIST
PREFIX NUMBER	TYPE SUFFIX	DESCRIPTION

REVISION LETTER	CLASS. REVISION	REVISIONS	DATE	CHANGED BY	CHECKED BY	APPROVED BY
-		ORIGINAL ISSUE	-	-	-	-

University of California
LOS ALAMOS SCIENTIFIC LABORATORY
Post Office Box 1663, Los Alamos, New Mexico 87545

CLASSIFICATION OF DRAWING: UNC
PART: UNC TITLE BLOCK: UNC

TITLE
Scrubber Control Rack
Wiring Diagram

	DRAWING	DATE	GROUP
DRAFTSMAN	KOENIG	6-2-79	H7
DRAWN	Wharton	5-12-80	E2
ENGINEER	RIDLON	8-18-80	H7
PROJ. ENGR.	KOENIG	8-8-80	H7
APPROVAL	[illegible]	2/3/81	H-7
ENGINEER	[illegible]	2-2-81	H7

TOLERANCE - (UNLESS OTHERWISE NOTED)
X = ± ___ 0.XX = ± ___ ANGULAR = ± ___
0.X = ± ___ 0.XXX = ± ___ FINISH = ___

SCALE	TOTAL SHEETS	DRAWING NO.	SHEET
NONE	7	103Y-223059D1	

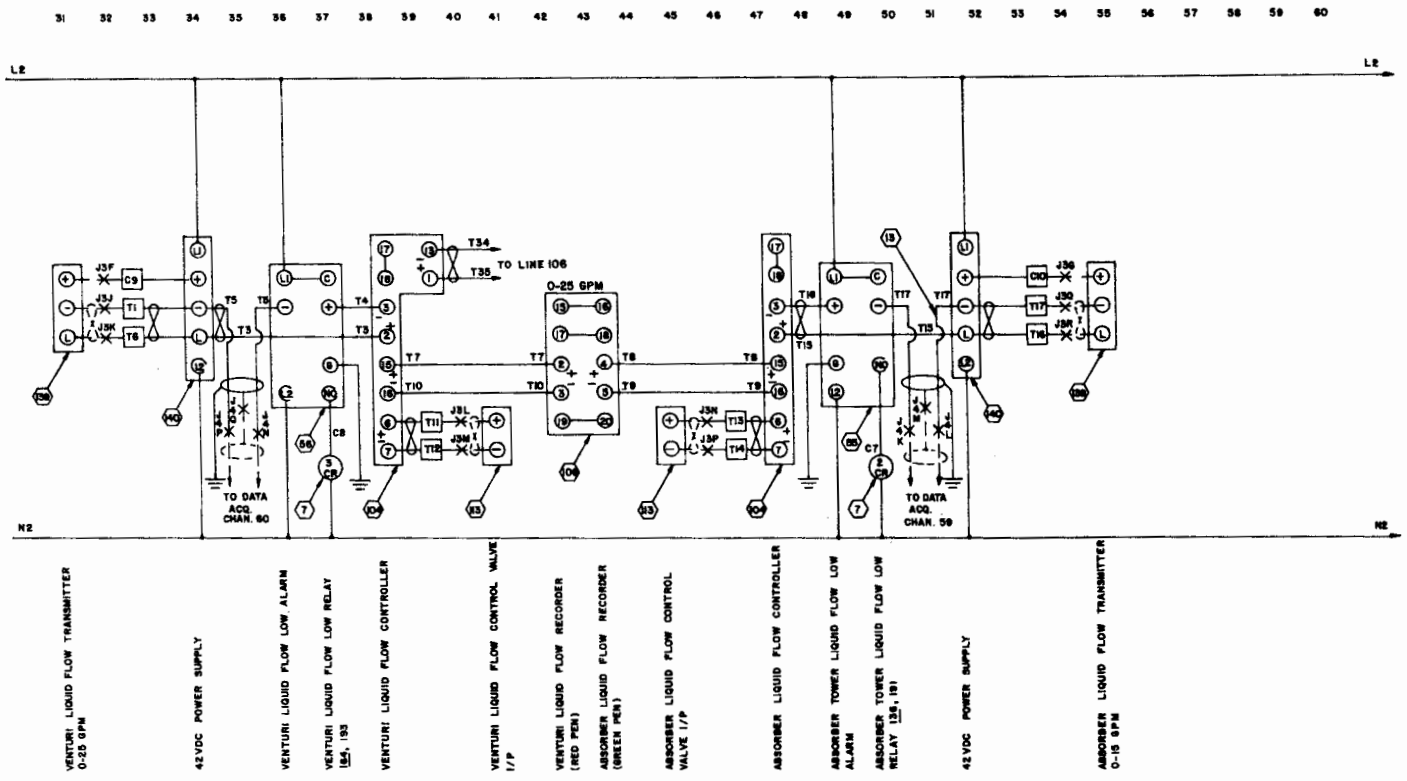

PART NUMBER		PARTS LIST	
PREFIX NUMBER	ITEM NUMBER	QTY	DESCRIPTION

—		ORIGINAL ISSUE	—	—	—
REVISED DRAWING	CHANGE ORDER	REVISIONS	DATE	CHANGED BY	CHECKED BY	APPROVED BY

University of California
LOS ALAMOS SCIENTIFIC LABORATORY
Post Office Box 1663 Los Alamos, New Mexico 87545

CLASSIFICATION OF DRAWING: UNC
PART: UNC TITLE BLOCK: UNC

TITLE
Scrubber Control Rack
Wiring Diagram

	SIGNATURE	DATE	GROUP
DESIGNATED	MOENIG	9-8-78	H7
DRAWN	Wharton	9-13-80	E2
CHECKED	RIDLON	9-18-80	H7
PROJ. MGR.	MOENIG	9-8-80	H7
APPROVED	[illegible]	9/18/80	H-7
RELEASED	[illegible]	9-3-80	H7

TOLERANCE - (UNLESS OTHERWISE NOTED)
X = ± ___ 0.XX = ± ___ ANGULAR = ± ___
0.X = ± ___ 0.XXX = ± ___ FINISH ___

SCALE	TOTAL SHEETS	DRAWING NO.	GROUP
NONE	7	103Y-22305902	

PART NUMBER		PARTS LIST	
PREFIX NUMBER	ITEM NUMBER	QUANTITY REQD	DESCRIPTION

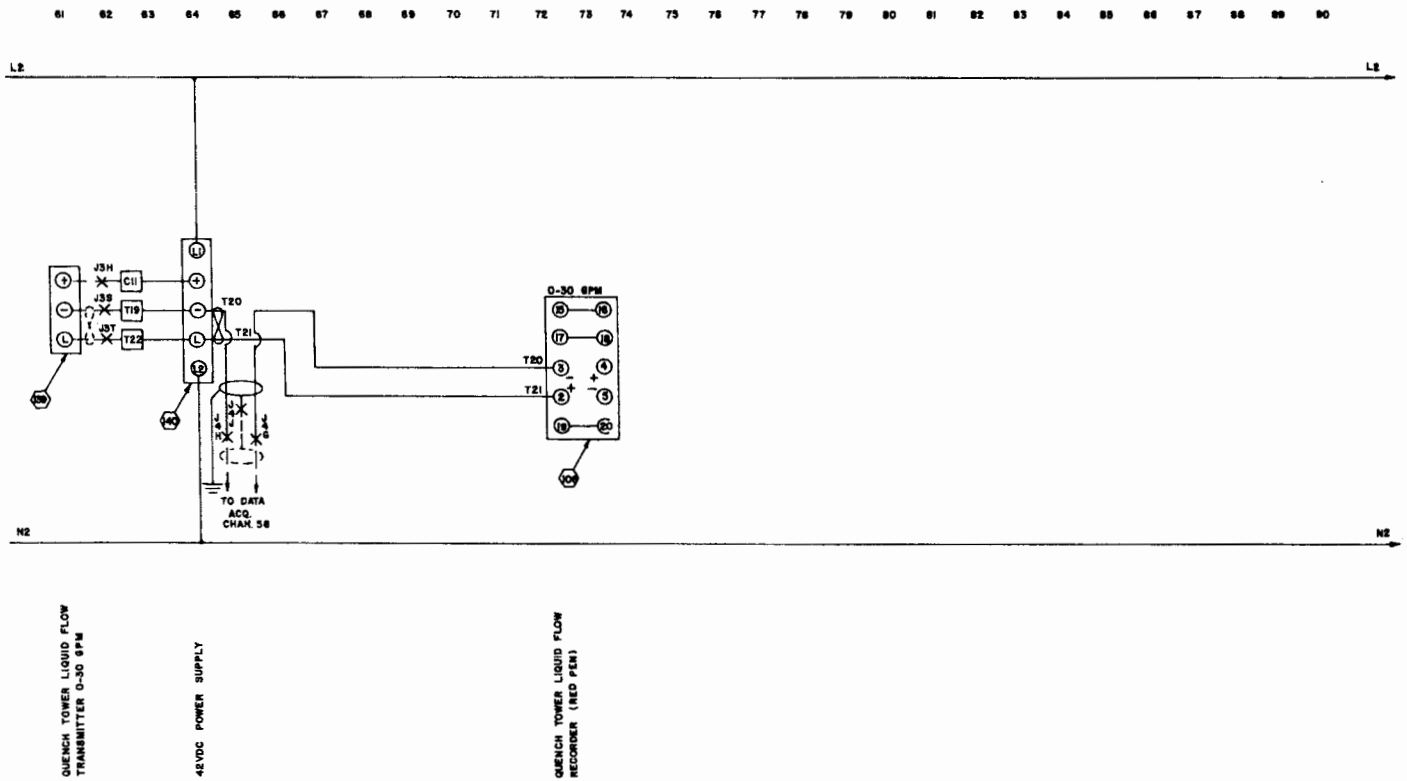

REVISION LETTER	ZONE REVISION	REVISIONS	DATE	CHANGED BY	CHECKED BY	APPROVED BY
–		ORIGINAL ISSUE	–	–	–	–

University of California
LOS ALAMOS SCIENTIFIC LABORATORY
Post Office Box 1663 Los Alamos, New Mexico 87544

CLASSIFICATION OF DRAWING: UNC
PART: UNC TITLE BLOCK: UNC

TITLE
Scrubber Control Rack Wiring Diagram

	SIGNATURE	DATE	GROUP
DESIGNED	KOENIG	5-5-76	H7
DRAWN	Wberlen	5-12-80	E2
CHECKED	RIDLON	5-13-80	H7
FINAL CHECK	KOENIG	5-2-80	H7
APPROVED		2/9/81	H7
RELEASED		2-3-81	H7

TOLERANCES - (UNLESS OTHERWISE NOTED)
X = ± ___ 0.XX = ± ___ ANGULAR = ± ___
0.XX = ± ___ 0.XXX = ± ___ FINISH - ___

SCALE NONE | SHEET NO. 7 | DRAWING NO. 103Y-22305903 | REV.

PART NUMBER			PARTS LIST
PREFIX NUMBER			DESCRIPTION

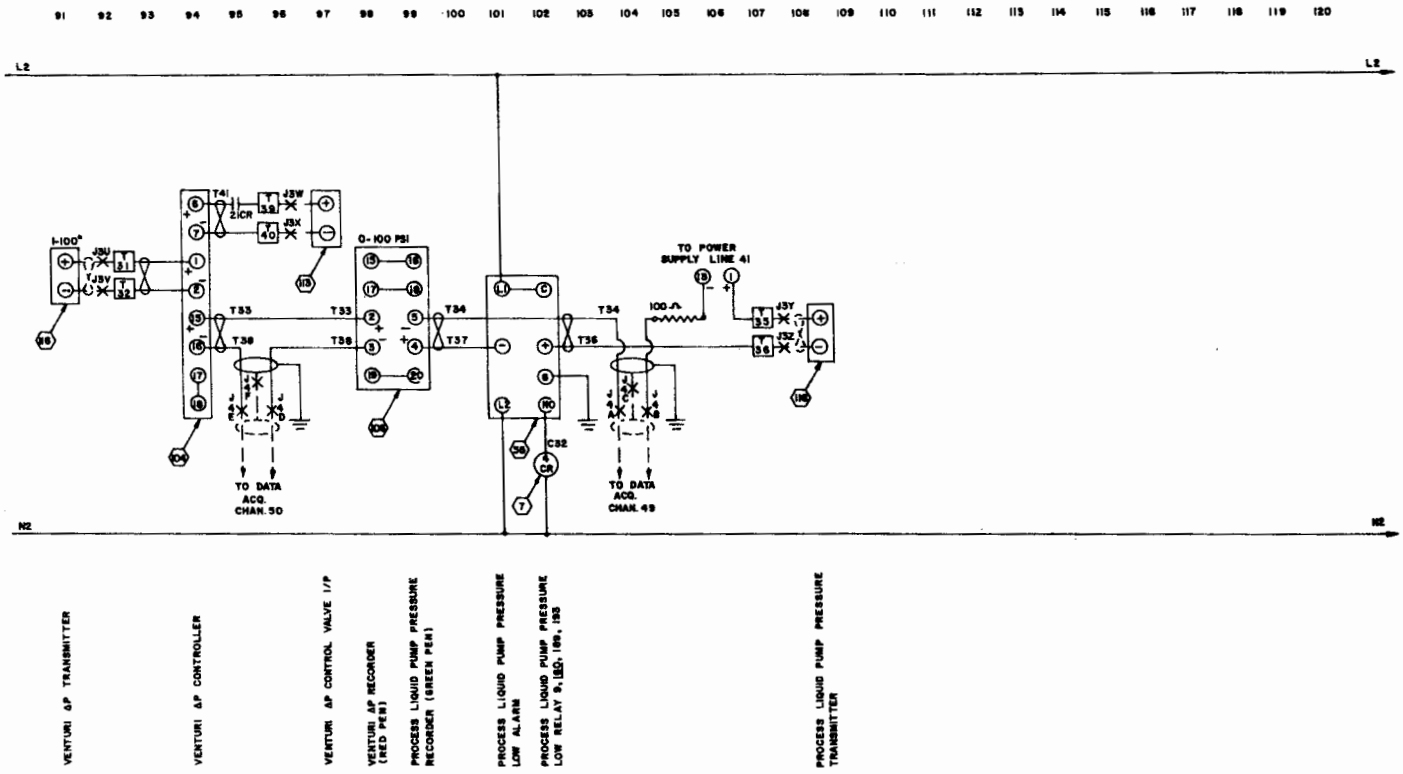

—		ORIGINAL ISSUE		—	—	—	—
PREVIOUS METER	FINAL CHANGE	REVISIONS	DATE	DRAWN BY	CHECKED BY	APPROVED BY

LOS ALAMOS SCIENTIFIC LABORATORY

CLASSIFICATION OF DRAWING: UNC

PART: UNC TITLE BLOCK: UNC

TITLE

Scrubber Control Rack Wiring Diagram

	SIGNATURE	DATE	GROUP
DRAFTED	KOENIG	9-3-79	H7
DRAWN	Wharton	5-12-80	E2
CHECKED	RIOLON	9-19-80	H7
ENGL. DRAW.	KOENIG	9-3-79	H7
APPROVED	[illegible]	2/5/81	H7
RELEASED	[illegible]	3-2-81	H7

TOLERANCE - (UNLESS OTHERWISE NOTED)
X = ± [illegible] 0.XX = ± [illegible] ANGULAR = ± [illegible]
0.X = ± [illegible] 0.XXX = ± [illegible] FINISH = [illegible]

SCALE: NONE TOTAL SHEETS: 7 DRAWING NO. 103Y-22305904 SHEET

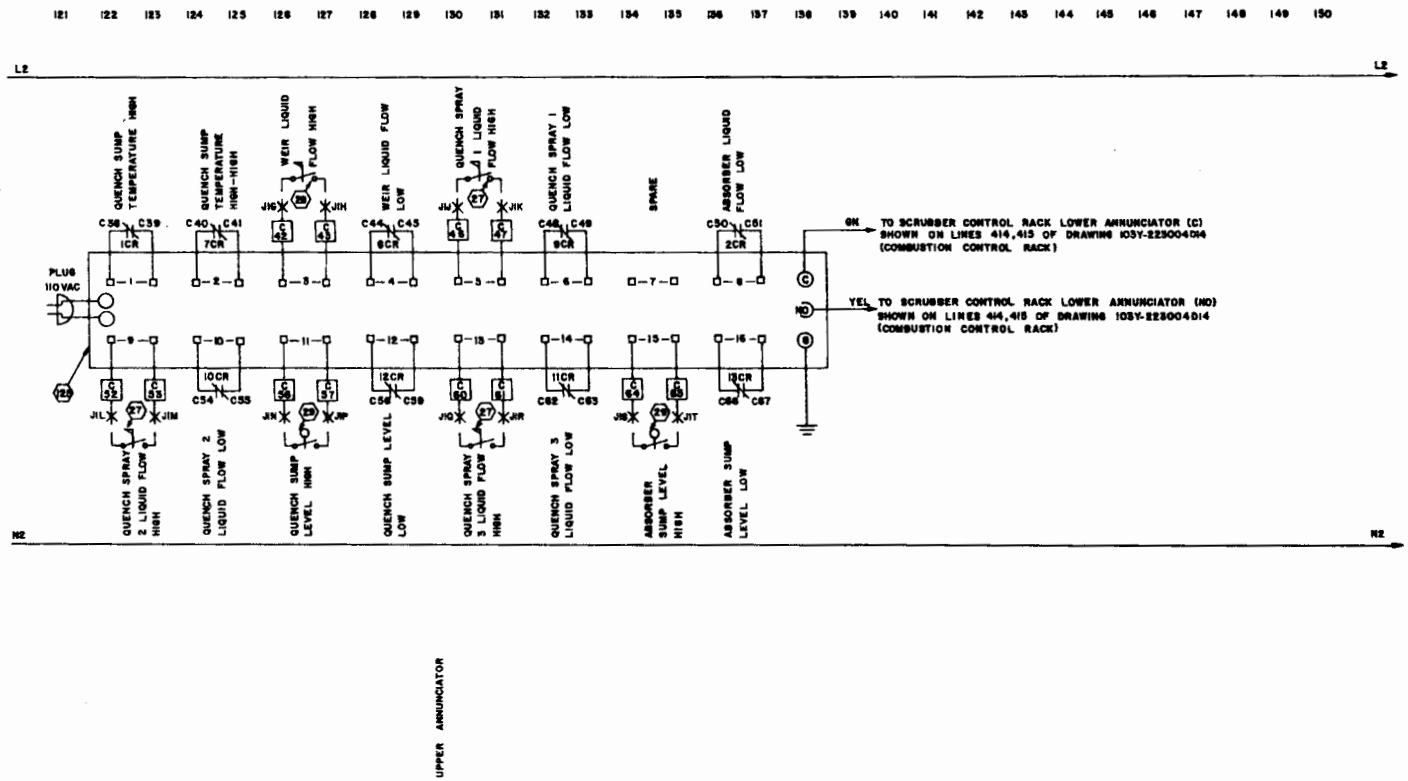

PART NUMBER			PARTS LIST
PREFIX NUMBER	FIRST NUMBER	SUFFIX NUMBER	DESCRIPTION

REVISION LETTER	PLANT REVISION	REVISIONS	DATE	DRAWN BY	CHECKED BY	APPROVED BY
—		ORIGINAL ISSUE	—	—	—	—

University of California
LOS ALAMOS SCIENTIFIC LABORATORY
Post Office Box 1663 Los Alamos, New Mexico 87545

CLASSIFICATION OF DRAWING: UNC
PART: UNC TITLE BLOCK: UNC

TITLE
Scrubber Control Rack
Wiring Diagram

	SIGNATURE	DATE	GROUP
DESIGNATED	KOENIG	6-3-79	H7
DRAWN	Wheeler	5-12-80	E2
CHECKED	RIDLON	6-16-80	H7
PROJ. ENGR.	KOENIG	6-2-80	H7
APPROVED	Ottburg	6/6/81	H7
RELEASED	A. Mader	6-2-81	H7

TOLERANCE - (UNLESS OTHERWISE NOTED)
X = ± ___ 0 PLACE ± ___ ANGULAR ± ___
0.X = ± ___ 0.XX = ± ___ FINISH ___

SCALE	TOTAL SHEETS	DRAWING NO.	SHEET
NONE	7	103Y-223059D5	

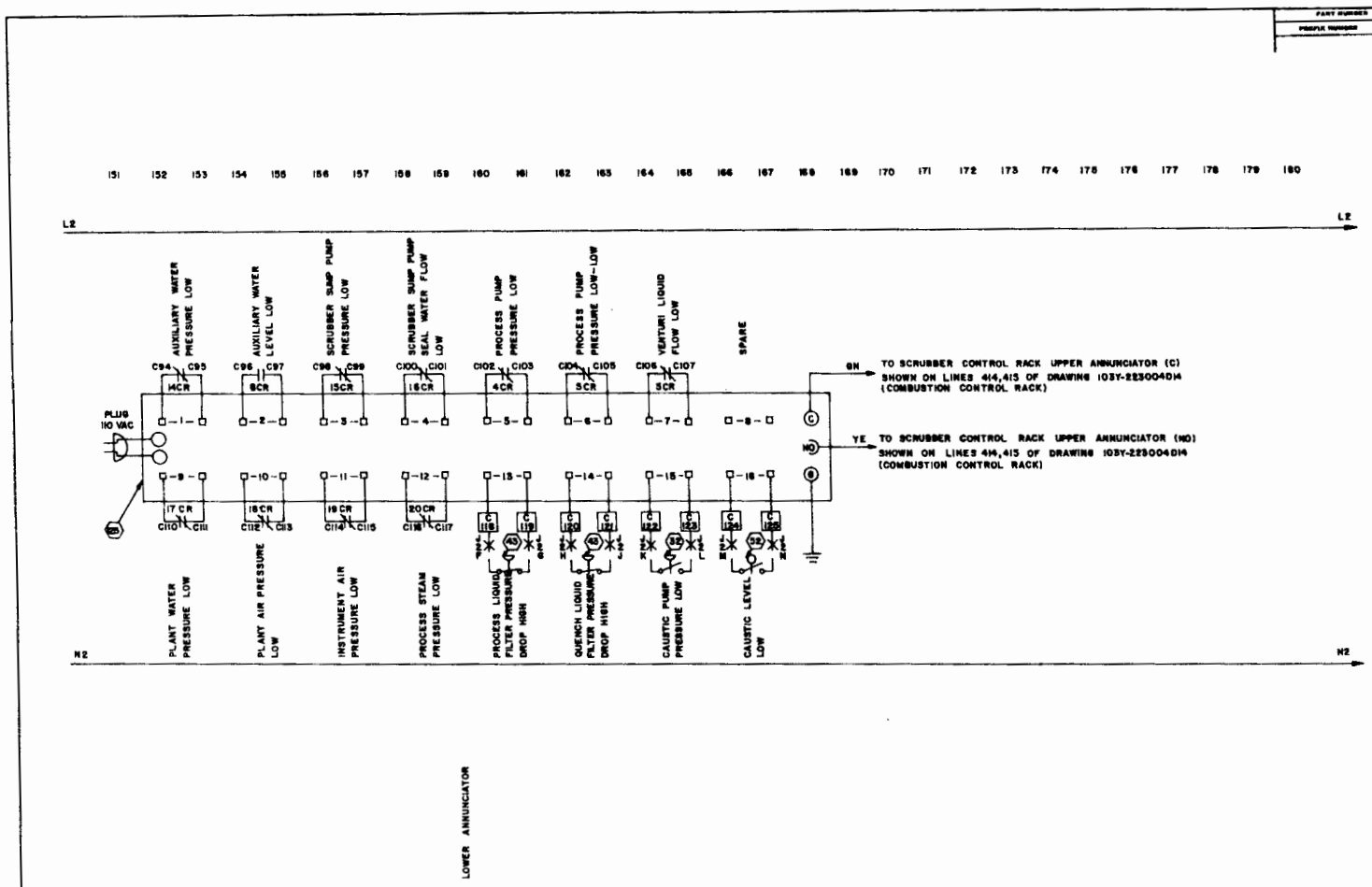

PART NUMBER			PARTS LIST
PROFILE NUMBER	ITEM NUMBER	REQUIRED QUANTITY	DESCRIPTION

REVISION LETTER	CLASS. REVISION	REVISIONS	DATE	CHANGED BY	CHECKED BY	APPROVED BY
—	—	ORIGINAL ISSUE	—	—	—	—

University of California
LOS ALAMOS SCIENTIFIC LABORATORY
Post Office Box 1663 Los Alamos, New Mexico 87545

CLASSIFICATION OF DRAWING: UNC
PART: UNC TITLE BLOCK: UNC

TITLE
Scrubber Control Rack Wiring Diagram

	SIGNATURE	DATE	GROUP
DESIGNATED	HOENIG	5-2-78	H7
DRAWN	Wharton	5-12-80	E2
CHECKED	HOLLOW	5-19-80	H7
ENGL. CHECK	HOENIG	5-2-80	H7
APPROVED	[illegible]	7/5/8	H7
RELEASED	[illegible]	7-1-80	H7

TOLERANCE - (UNLESS OTHERWISE NOTED)
X = ± ___ 0.XX = ± ___ ANGULAR = ± ___
0.X = ± ___ 0.XXX = ± ___ FINISH ___

SCALE	TOTAL SHEETS	DRAWING NO.	SHEET
NONE	7	103Y-22305906	

REVISED 270

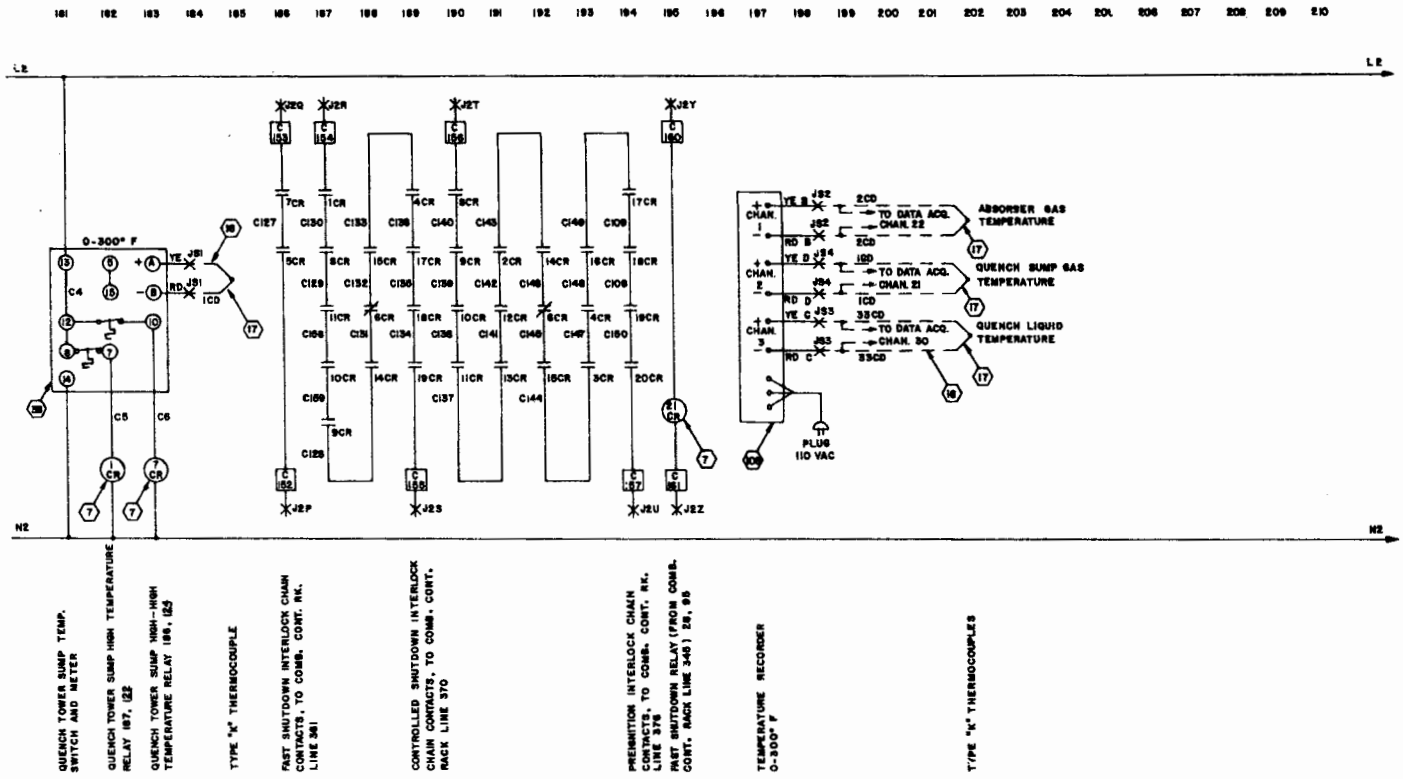

PART NUMBER		PARTS LIST	
PARTIAL NUMBER	FIRST ASSEMBLY	CODE	DESCRIPTION

—		ORIGINAL ISSUE	—	—	—	—
REPLACED	CHANGE NOTICE	REVISIONS	DATE	CHECKED BY	DESIGNED BY	APPROVED BY

University of California
LOS ALAMOS SCIENTIFIC LABORATORY
Post Office Box 1663 Los Alamos, New Mexico 87544

CLASSIFICATION OF DRAWING: UNC
PART: UNC TITLE BLOCK: UNC

TITLE
Scrubber Control Rack
Wiring Diagram

	SIGNATURE	DATE	GROUP
DESIGNED	HOENES	6-3-76	H7
DRAWN	Wharton	5-12-80	E 2
CHECKED	RIDLON	5-15-80	H7
FOCAL SENS.	HOENES	6-3-76	H7
APPROVED	[illegible]	[illegible]	[illegible]
PROJECTION	[illegible]	[illegible]	[illegible]

TOLERANCE - UNLESS OTHERWISE NOTED
X = ± [illegible] 0.XX = ± [illegible] ANGULAR = ± [illegible]
0.X = ± [illegible] 0.XXX = ± [illegible] FINISH = [illegible]

SCALE: NONE | SHEET: 7 | DRAWING NO.: 103Y-223059D7

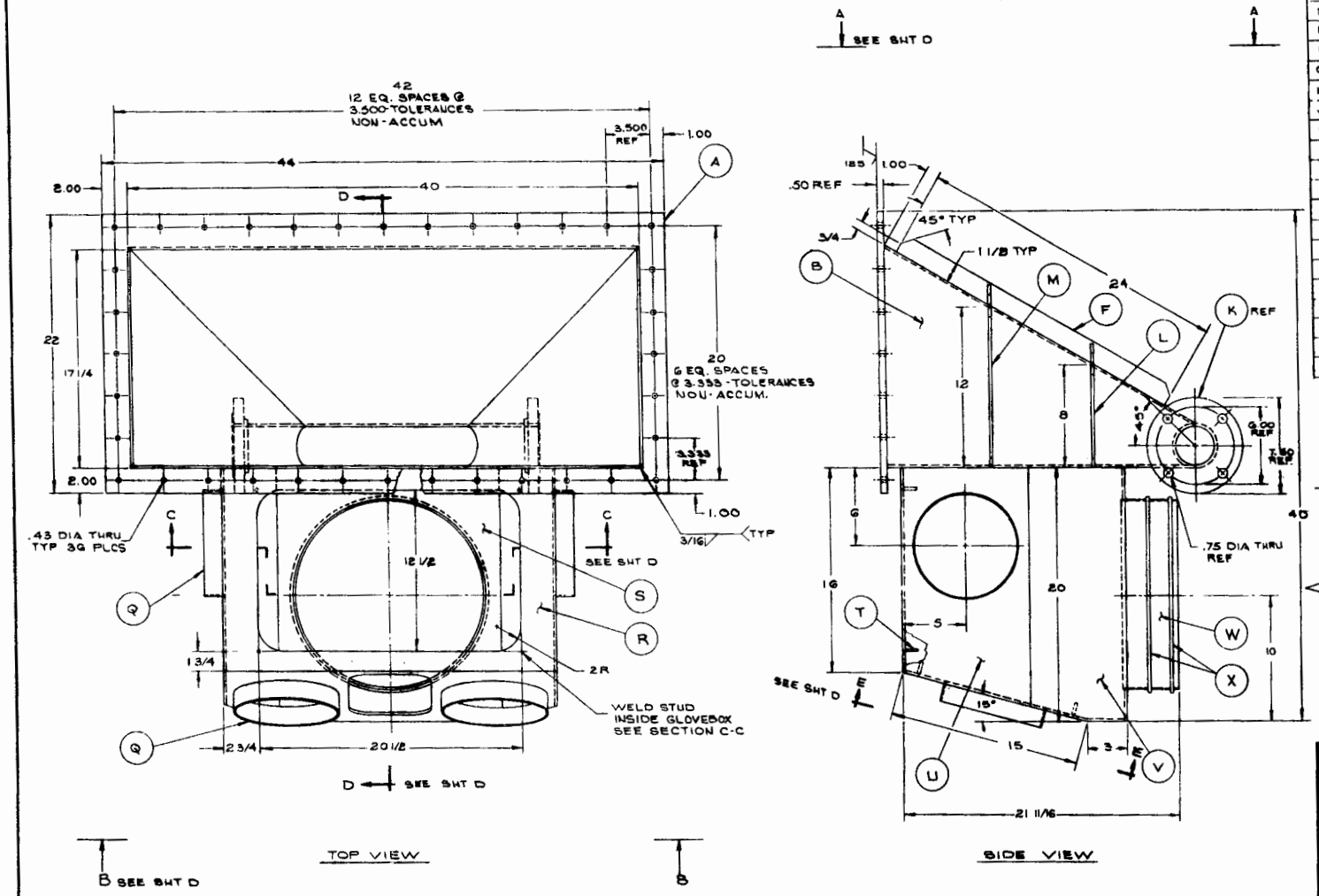

200	1	ASH BIN AND GLOVEBOX
A	1	PLATE, S. STL., TYPE 304, - 1/2 THK
B	2	SHEET, S. STL., TYPE 304 - 3/16 THK
C	1	SHEET, S. STL., TYPE 304 - 3/16 THK
D	1	SHEET, S. STL., TYPE 304 - 3/16 THK
E	2	PLATE, S. STL., TYPE 304 - 1/4 THK
F	2	PLATE, S. STL., TYPE 304 - 1/4 THK
G	2	PLATE, S. STL., TYPE 304 - 1/4 THK
H	2	PLATE, S. STL., TYPE 304 - 1/4 THK
J	1	PIPE, SEAMLESS, S. STL, SCH 40, - 3 IN
K	2	FLANGE, SLIP-ON, S. STL., CLASS 150, - 3 IN
L	2	PLATE, S. STL., TYPE 304 - 1/4 THK
M	2	PLATE, S. STL., TYPE 304 - 1/4 THK
N	1	SHEET, S. STL., TYPE 304 - 3/16 THK
P	1	SHEET, S. STL., TYPE 304 - 3/16 THK
Q	4	SHEET, S. STL., TYPE 304 - 1/8 THK
R	1	SHEET, S. STL., TYPE 304 - 3/16 THK
S	1	SHEET, S. STL., TYPE 304 - 3/16 THK
T	8	STUD, WELD, S. STL., TYPE 304 - ASTM A240 - 1/4-20 UNC x 1 IN
U	2	SHEET, S. STL., TYPE 304 - 3/16 THK
V	2	SHEET, S. STL., TYPE 304 - 3/16 THK
W	1	SHEET, S. STL., TYPE 304 - 1/8 THK
X	2	BAR, S. STL., TYPE 304 - 1/4 DIA.

NOTES

1. ALL DIMENSIONS APPLY AFTER WELDING
2. BREAK ALL SHARP CORNERS
3. ALL WELDS TO BE CERTIFIED WATERTIGHT EXCEPT AS NOTED
4. NO WATERTIGHT REQUIREMENTS NECESSARY ON THESE WELDS

200 ASH BIN AND GLOVEBOX

ORIGINAL ISSUE

Los Alamos Scientific Laboratory of the University of California

CLASSIFICATION OF DRAWING: UNC
PART: UNC TITLE BLOCK: UNC

TITLE
TREATMENT DEVELOPMENT FACILITY

GRAVITY ASH REMOVAL SYSTEM

DESIGNED			
DRAWN	L. MARTINEZ	6-16	WM-4
CHECKED		6-20	EE
ENGL. CHECK		6-16	WJ
APPROVED		6/16/	N-7
RELEASED		2-5-5	WJ

TOLERANCES - (UNLESS OTHERWISE NOTED)
X = ± 1/16 ANGLE = ± ___ ANGULAR = ± ___
X.X = ± ___ X.XXX = ± .015 FRACT = ___

SCALE 1/4 SHEET NUMBER 3 DRAWING NO. 1031-223064 REV. D 7

PART NUMBER		PARTS LIST	
FINISH NUMBER	QTY	REQ'D	DESCRIPTION

NOTE -
SEE SHT D FOR PARTS LIST

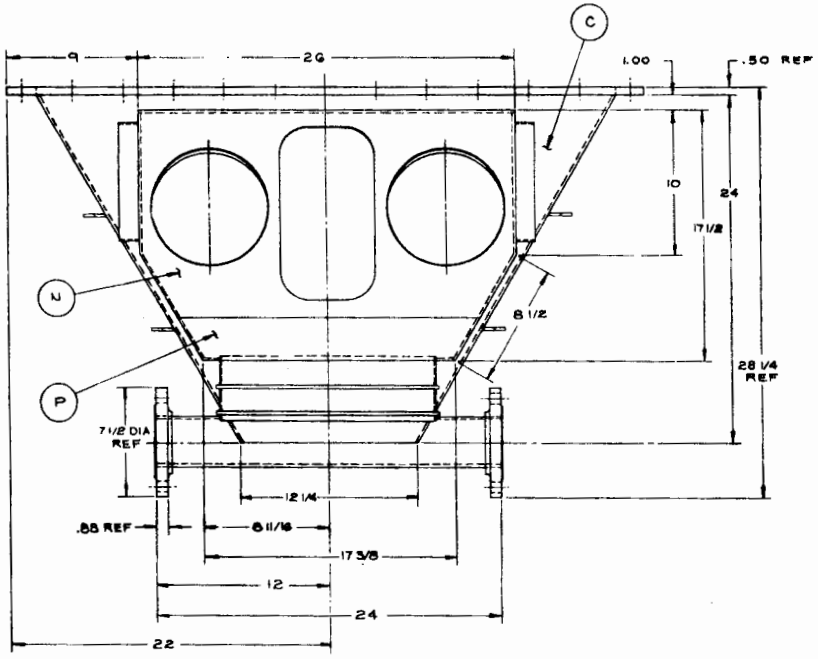

VIEW B-B (FRONT)
FROM SHT D

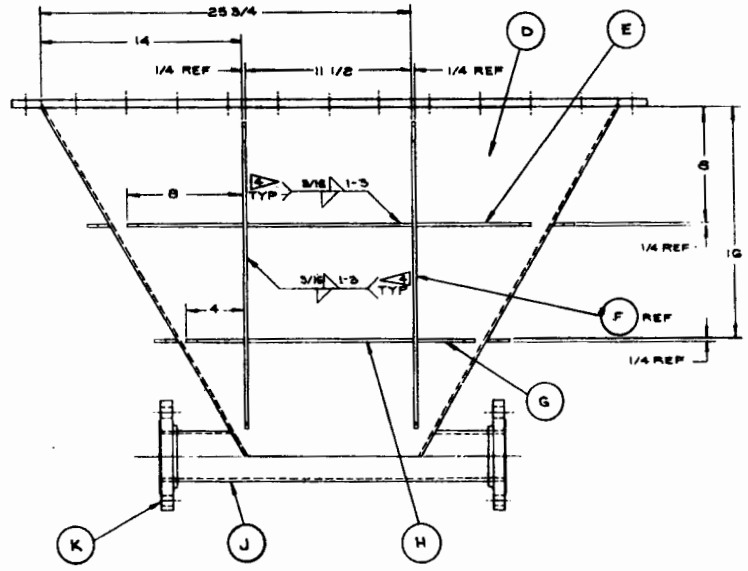

VIEW A-A (BACK)
FROM SHT D
(ROTATED CCW 90°)

–		ORIGINAL ISSUE		–	–	–	–
REVISION		REVISIONS		DATE	CHECKED BY	PROJECT ENG BY	DESIGN BY

Los Alamos
Scientific Laboratory
of the University of California
LOS ALAMOS, NEW MEXICO

CLASSIFICATION OF DRAWING: UNCL.
PART: UNCL. TITLE BLOCK: UNCL.

TITLE
TREATMENT DEVELOPMENT FACILITY

GRAVITY ASH REMOVAL SYSTEM

	DESIGNER	DATE	DESIGN
DESIGNED	Montoya	6-26	MT
DRAWN	J. Lopez	6-26	WVE-4
CHECKED	Valencia	6-26	EE
PROJ. ENGR.	Kaczor	6-26	MT
APPROVED	Gilmore	6/6/71	MT
APPROVED	Wilson	7-8-71	MT

TOLERANCES - UNLESS OTHERWISE NOTED
X = ± 1/16 0.XX = ± ____ ANGULAR = ± ____
0.X = ± ____ 0.XXX = ± ____ FRACT. = ____

SCALE 1/4 | SHEET NUMBER 3 | DRAWING NO. 1051-223064 D 2 | REVISION

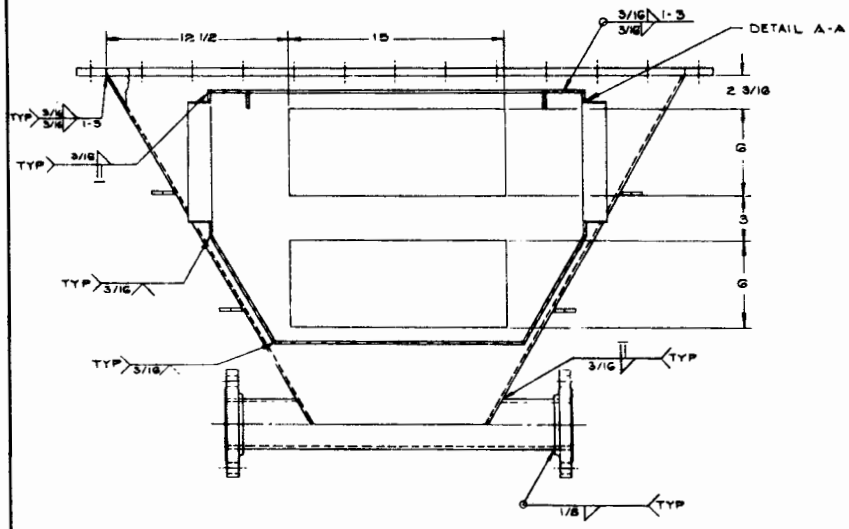

SECTION C-C
FROM SHT D

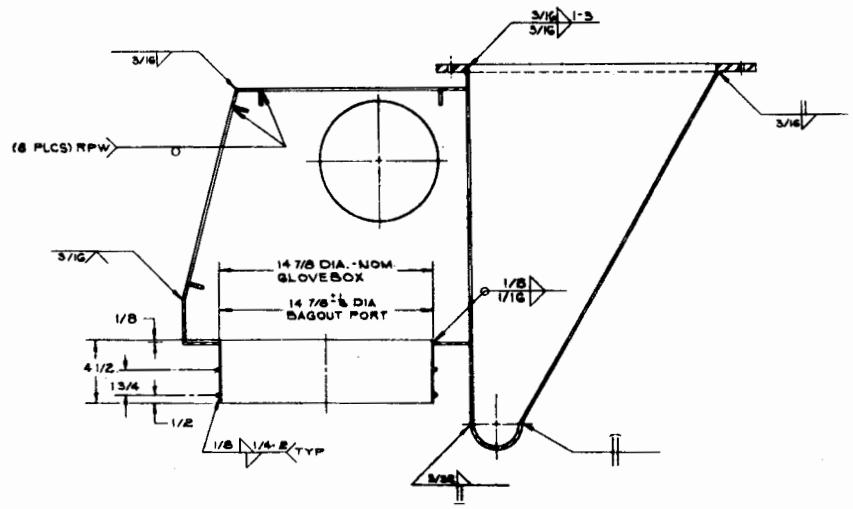

SECTION D-D
FROM SHT D
(ROTATED CW 90°

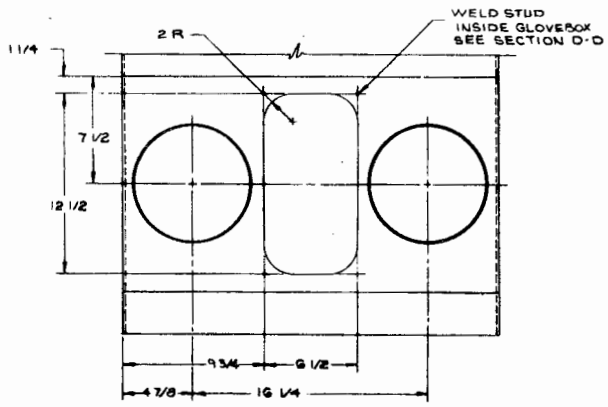

VIEW E-E
FROM SHT D
(ROTATED CCW 90°

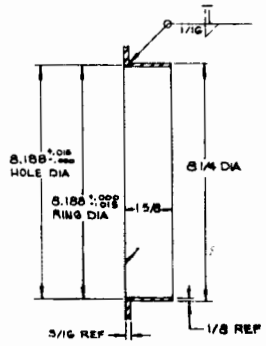

DETAIL A-A
GLOVEPORT RING
SCALE - 1/2

ORIGINAL ISSUE			

Los Alamos

TITLE
TREATMENT DEVELOPMENT FACILITY

GRAVITY ASH REMOVAL SYSTEM

SCALE 1/4 | SHEET 3 | 1031-223064 | D 3

PURCHASED PARTS		
ITEM	QTY	DESCRIPTION
15	80	5/8" SS NUT
16	80	5/8" SS SPLIT LOCK WASHER
17	80	5/8" x 1 1/2" SS BOLT
18	80	5/8" SS SPLIT LOCK WASHER
19	128	5/8" SS NUT
20	2	3/4" SS NUT
21	2	3/4" SS SPLIT LOCK WASHER
22	8	3/4" x 1 1/2" SS BOLT
23	16	3/4" x 2 1/2" SS BOLT
24	1	VIBRATOR - 1/2" - 450
25	2	AIR MOTOR - GREER BV-40

PARTS LIST			
PART NUMBER	ITEM NUMBER	QTY. PER UNIT	DESCRIPTION
103Y-223040	1	1	GADOS - ASH DOOR LINKAGE
103Y-223041	2	1	GADOS - DELUMPER
103Y-223042	3	1	GADOS - ASH DOOR HOUSING
103Y-223043	4	1	GADOS - GRATE ASSEMBLY
103Y-223044	5	1	GADOS - LOWER HOPPER
103Y-223045	6	1	GADOS - ASH DOOR HOUSING BAROUT COVER
103Y-223046	7	1	GADOS - ADAPTOR PLATE
103Y-223047	8	2	GADOS - DELUMPER CLEANOUT DOOR
103Y-223048	9	1	GADOS - ACTUATOR BRACKET - RT
103Y-223049	10	1	GADOS - UPPER GASKET
103Y-223050	11	1	GADOS - LOWER GASKET
103Y-223051	12	1	GADOS - BAROUT COVER GASKET
103Y-223052	13	2	GADOS - ASH DOOR GUIDE ROD
103Y-223053	14	1	GADOS - ACTUATOR BRACKET - LEFT

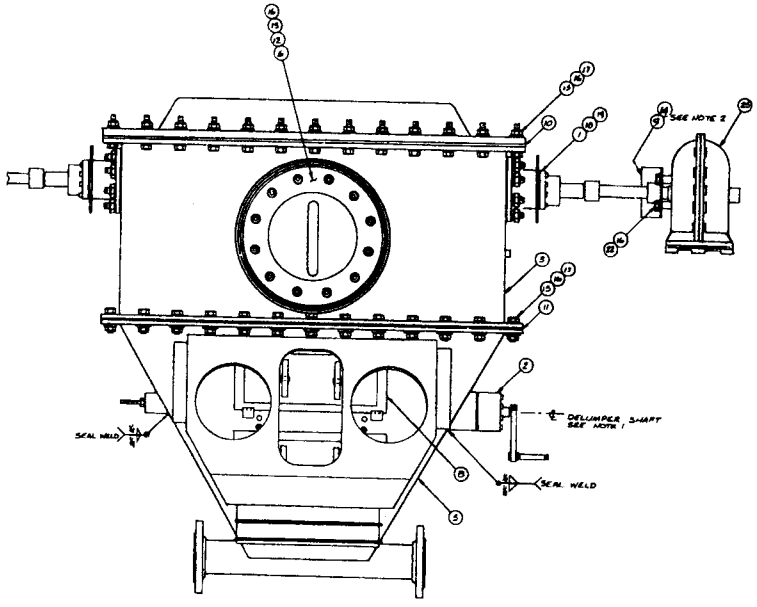

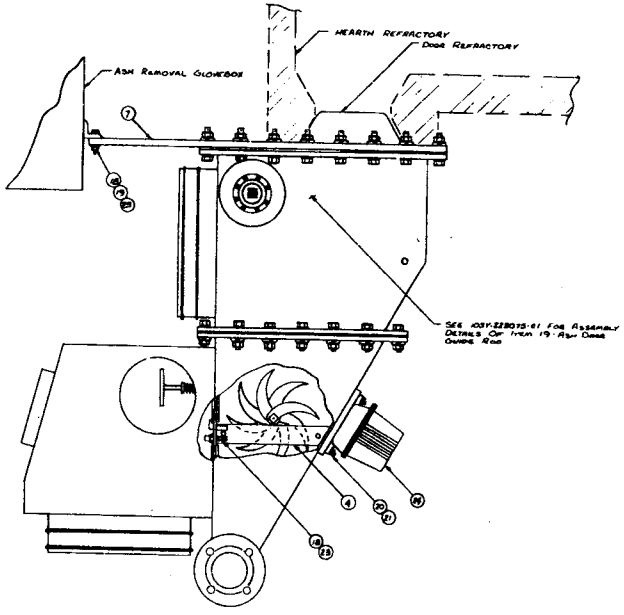

NOTES:
1. EMERGENCY ACTUATOR HANDLES (103Y-223077-D1) SLIPS ONTO ITEMS 25.
2. ACTUATOR BRACKETS (ITEMS 9 & 14) WELD TO INCINERATOR SUPPORT ASSEMBLY.
3. INSTALL DELUMPER (ITEM 2) AS FOLLOWS: LOCATE ℄ OF SHAFT .75" ABOVE INSTALLED GRATE ASSEMBLY AND CENTRED ON LOWER HOPPER SIDES. CUT HOLES AS REQD IN SIDES AND WELD AS SPECIFIED.

ORIGINAL ISSUE			
REVISIONS			

UNIVERSITY OF SASKATCHEWAN
DEPARTMENT OF MECHANICAL ENGINEERING
ROOM 3B, 57 CAMPUS DRIVE, SASKATOON, SASK. S7N 5A9

DRAWN	Gauvin	1.23.92	N1
CHECKED	Pierson	1.30.92	PP
MFG.			
APPROVED			
APPROVED			
APPROVED			
APPROVED			

PROJECT: UWC
TITLE: UWC

TITLE: GRAVITY ASH DROPOUT SYSTEM (GADOS) FINAL ASSEMBLY

TOLERANCES UNLESS OTHERWISE NOTED:
.XX ±.010 ANGLES ±0.30°
.XXX ±.005 FRACTIONS ±1/16

SCALE	SHEET	DRAWING NO.
1/4	1	103Y-223060D1

PURCHASED PARTS		
ITEM	QTY	DESCRIPTION
4	4	1/2-13 SS NUT
5	4	1/2" SS FLAT WASHER
6	2	SPRING

PART NUMBER			PARTS LIST
PREFIX NUMBER			DESCRIPTION
103X-223069-03	1	2	DOOR HANDLE
103X-223069-02	2	1	DOOR WELDMENT
103X-223069-01	3	2	LATCH

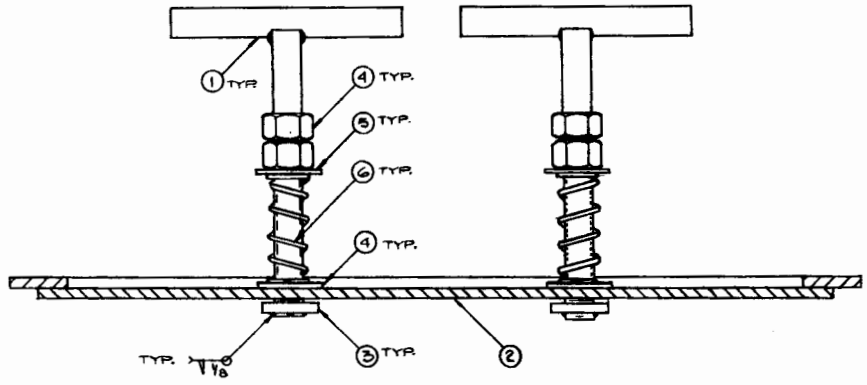

ORIGINAL ISSUE			
REVISIONS	DATE	DRAWN BY	CHECKED BY

CLASSIFICATION OF DRAWING: UNC

PART: UNC TITLE BLOCK: UNC

TITLE

GRAVITY ASH DROPOUT SYSTEM (GADOS)

DELUMPER CLEANOUT DOOR

	SIGNATURE	DATE	GRADE
DESIGNED	KOENIG	6/12/78	H7
DRAWN	VIGIL	5/24/80	E2
CHECKED	PRESTON	5-80	E2
PROJ. ENGR.	Wilcox	1/6/81	H7
APPROVED	Wilcox	1/6/81	H7
ENG. MANAGER	Wilcox	1-7-81	H7

TOLERANCE - UNLESS OTHERWISE NOTED

X = ± — 0.XX = ± .00 ANGULAR = ± —

0.XX = ± — 0.XXX = ± .005 FINISH = 125

SCALE FULL | SHEET 3 | DRAWING NO. 103X-223069 | SIZE D | REV. 1

GENERAL NOTES: UNLESS OTHERWISE NOTED

1. ALL DIMENSIONS IN INCHES.
2. BREAK ALL SHARP EDGES.
3. USE 1/8" AL TIPPED WORK TO MAKE SCRIBING.
4. USE 1/8" x .005 SHIM AS REQUIRED FOR FIT.
5. DIMENSIONS & TOLERANCES TAKEN FROM AS PLANNED.
6. WELDING SYMBOLS PER AWS WELD-2000.
7. WELDING SYMBOLS PER AWS WELD-2000.

REVISIONS		
	—	
	A	
	B	
	C	
	D	
	E	
	F	
	G	
	H	
	J	
	K	
	L	
	M	
	N	
	P	
	R	
	S	
	T	
	U	
	V	
	W	
	X	
	Y	
	Z	

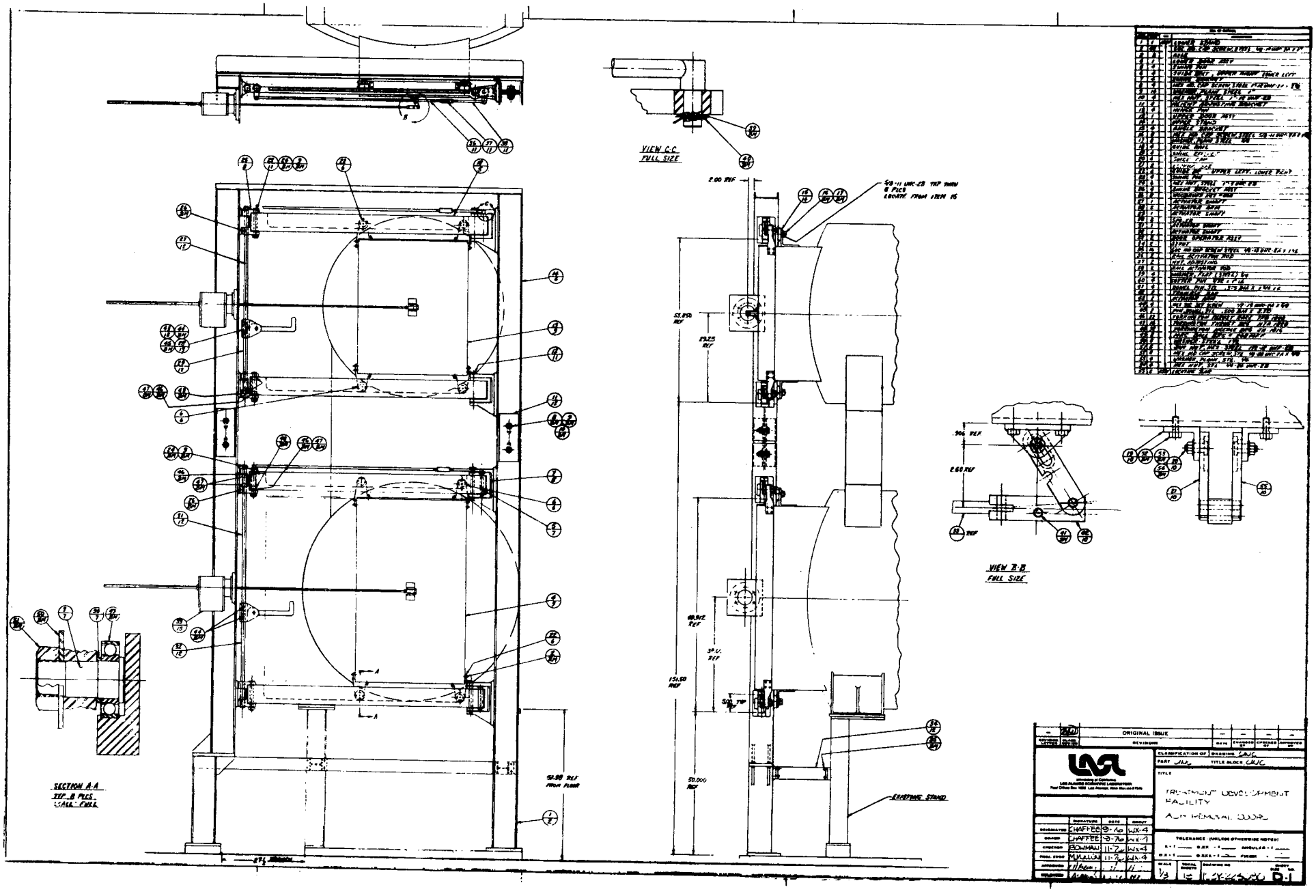
VIEW C-C
FULL SIZE
VIEW B-B
FULL SIZE
SECTION A-A
TYP 8 PLCS.
SCALE: FULL
EXISTING STAND
ORIGINAL ISSUE
REVISIONS
TITLE
TREATMENT DEVELOPMENT FACILITY
AIR REMOVAL DOOR
TOLERANCE (UNLESS OTHERWISE NOTED)
D-1

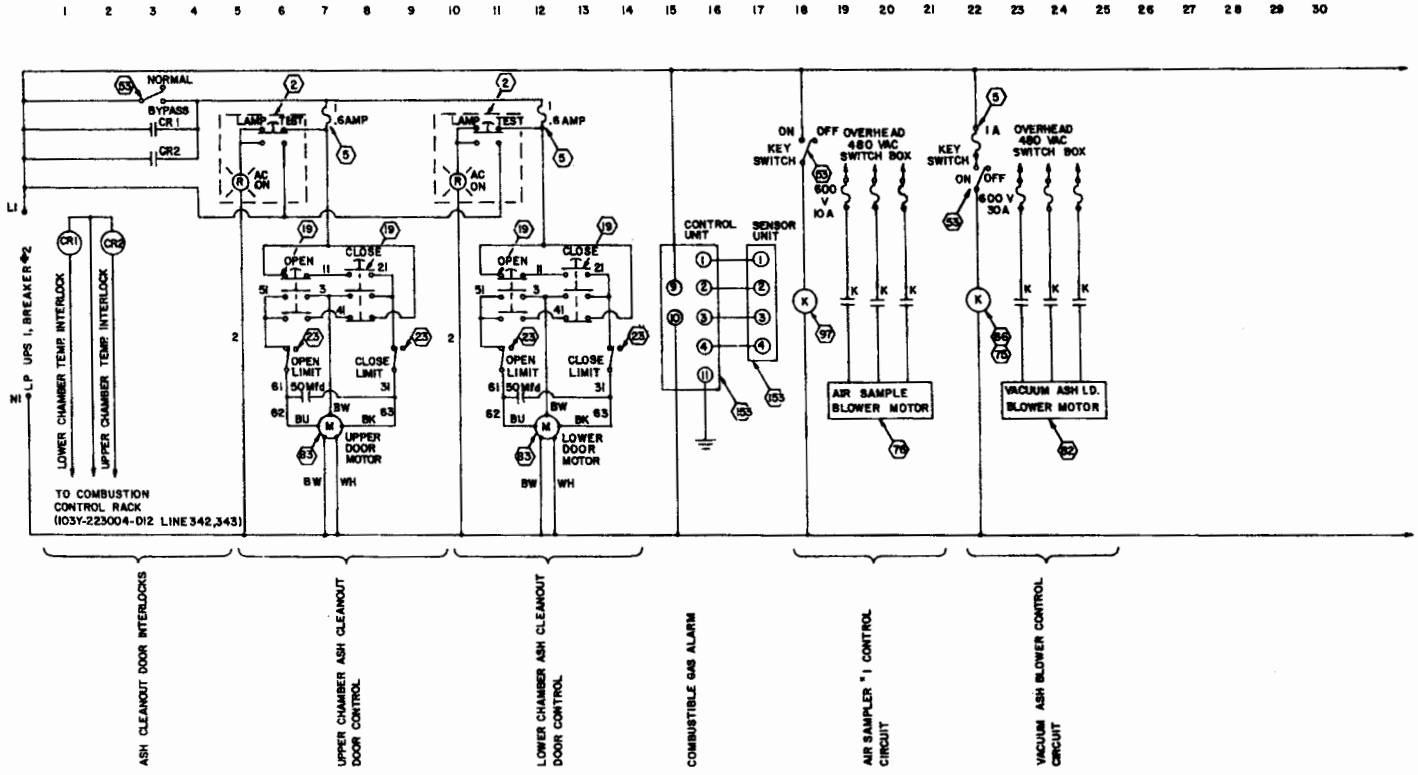

PART NUMBER			PARTS LIST
PREFIX NUMBER	FIRST NUMBER	SUFFIX NUMBER	DESCRIPTION

REVISIONS					
—	—	ORIGINAL ISSUE	—	—	—

University of California
LOS ALAMOS SCIENTIFIC LABORATORY
Post Office Box 1663, Los Alamos, New Mexico 87544

CLASSIFICATION OF DRAWING: UNC
PART: UNC TITLE BLOCK: UNC

TITLE
Process Equipment Wiring Diagram— External

	SIGNATURE	DATE	GROUP
DRAFTSMAN	KOENIG	8-2-76	H7
DESIGN	Whartes	8-2-80	E2
CHECKED	RIDLON	10-1-80	H7
PROJ. MGR.	KOENIG	8-2-76	H7
APPROVED	[illegible]	2/9/81	H7
RELEASED	[illegible]	3-1-81	H7

TOLERANCE - (UNLESS OTHERWISE NOTED)
X = ± — 0.XX = ± — ANGULAR = ± —
0.X = ± — 0.XXX = ± — FINISH — —

SCALE: NONE | TOTAL SHEETS: 5 | DRAWING NO.: 103Y-223089 D1 | SHEET

PDPW: 1700-002-012

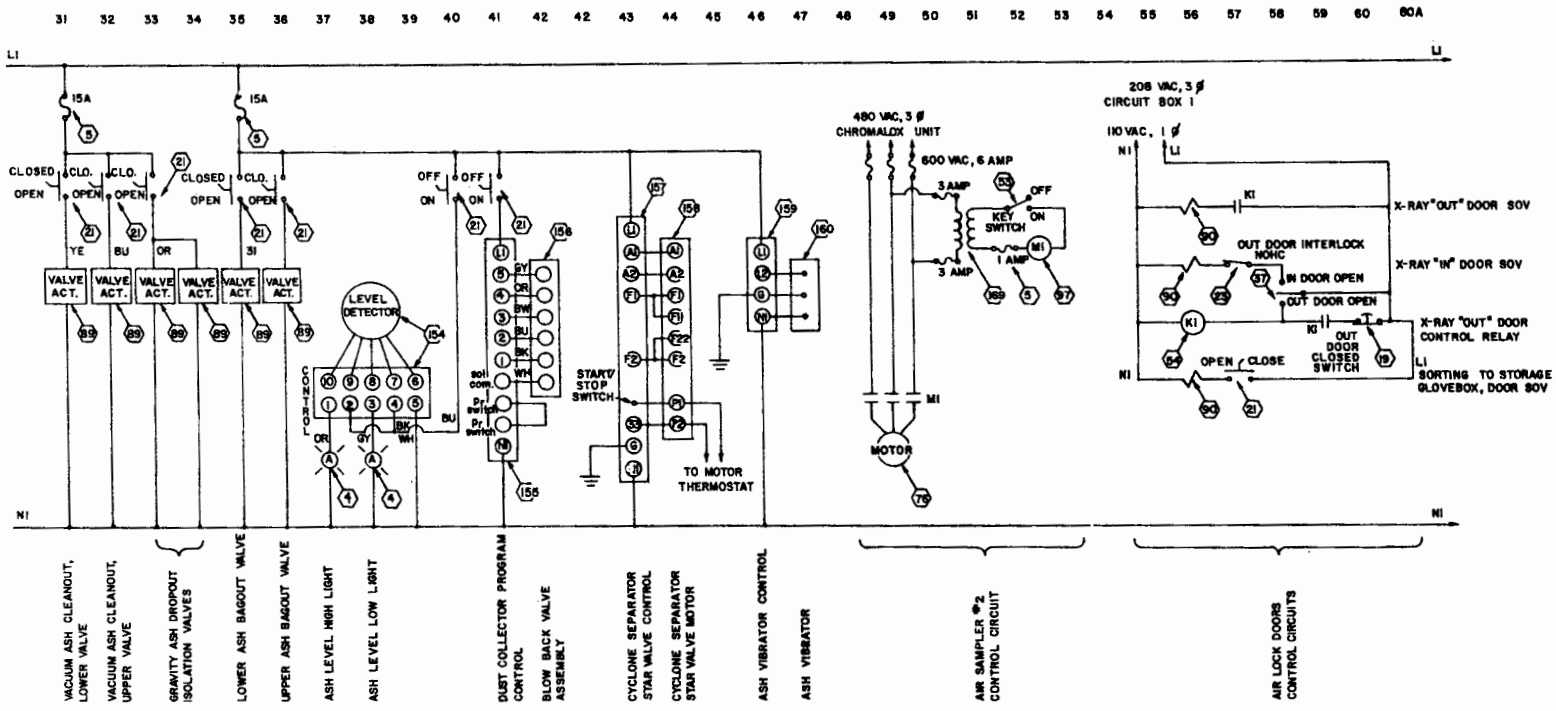

PART NUMBER			PARTS LIST
PREFIX NUMBER	ITEM NUMBER	REQUIRED QUAN	DESCRIPTION

REVISION LETTER	REVISION NUMBER	REVISIONS	DATE	DRAWN BY	CHECKED BY	APPROVED BY
—		ORIGINAL ISSUE	—	—	—	—

University of California
LOS ALAMOS SCIENTIFIC LABORATORY
Post Office Box 1663 Los Alamos, New Mexico 87544

CLASSIFICATION OF DRAWING: UNC
PART: UNC TITLE BLOCK: UNC

TITLE
Process Equipment Wiring Diagram - External

	SIGNATURE	DATE	GROUP
DRAFTSMAN	KOENIG	6-2-76	H7
DESIGNER	Wharton	9-9-80	E2
ENGINEER	RIOLON	10-1-80	H7
PROJ. ENGR.	KOENIG	6-2-76	H7
APPROVED	[illegible]	2/9/82	H1
RELEASED	[illegible]	3-3-81	H7

TOLERANCE - (UNLESS OTHERWISE NOTED)
X = ± ___ ∠ ; .XX = ± ___ ∠ ; ANGULAR = ± ___ ∠
.XX = ± ___ ∠ ; .XXX = ± ___ ∠ ; FINISH = ___

SCALE	TOTAL SHEETS	DRAWING NO.	SHEET
NONE	5	103Y-223089 D2	

PART NUMBER		PARTS LIST	
PARTS NUMBER	ITEM NUMBER	QUANTITY	DESCRIPTION

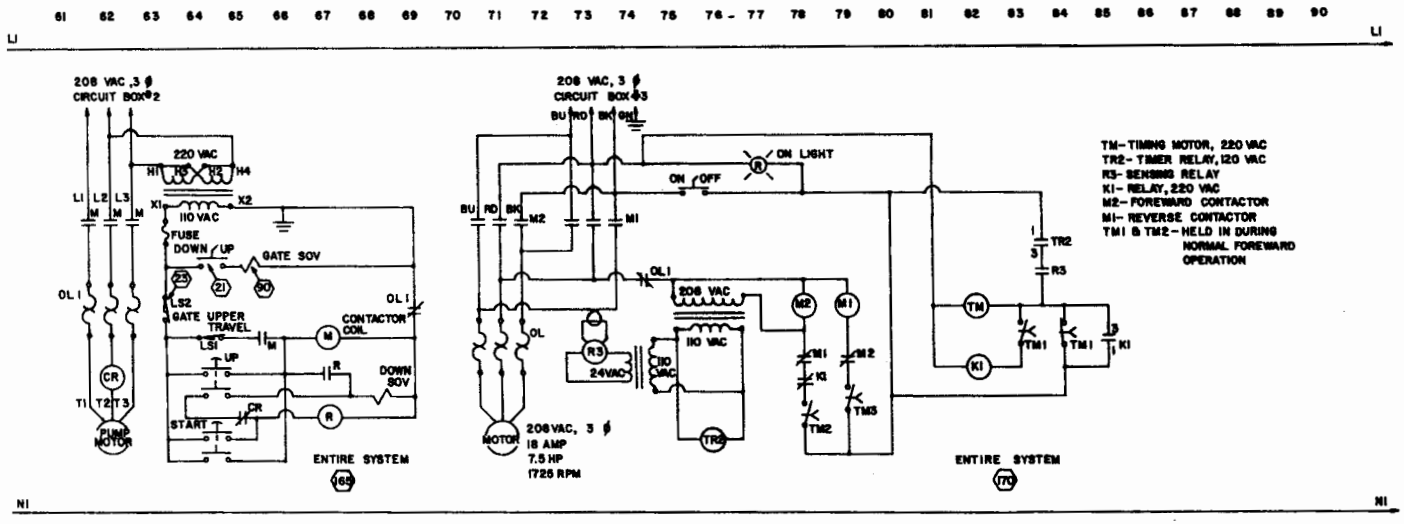

BUCKET CRUSHER CONTROLS

MUNSON SHREDDER CONTROL CIRCUITRY

REVISION NOTICE	REVISION	DATE	DRAWN BY	CHECKED BY	APPROVED BY
—	ORIGINAL ISSUE	—	—	—	—

University of California
LOS ALAMOS SCIENTIFIC LABORATORY
Post Office Box 1663 Los Alamos, New Mexico 87544

CLASSIFICATION BY DRAWING: UNC
PART: UNC TITLE BLOCK: UNC

TITLE
Process Equipment Wiring Diagram- External

	SIGNATURE	DATE	GROUP
DESIGNED	ROENNIG	6-5-78	H7
DRAWN	Wherlee	9-9-80	E2
CHECKED	RUDLON	10-1-80	H7
FINAL APPR.	ROENNIG	6-5-78	H7
APPROVED		7/4/81	
RELEASED		3-5-81	H7

TOLERANCE - (UNLESS OTHERWISE NOTED)
X ± 1 — 0.XX ± 1 — ANGULAR ± 1 —
0.X ± 1 — 0.XXX ± 1 — FRACTIONS ± —

SCALE NONE | SHEET SIZE S | DRAWING NO. 105Y-223089 03

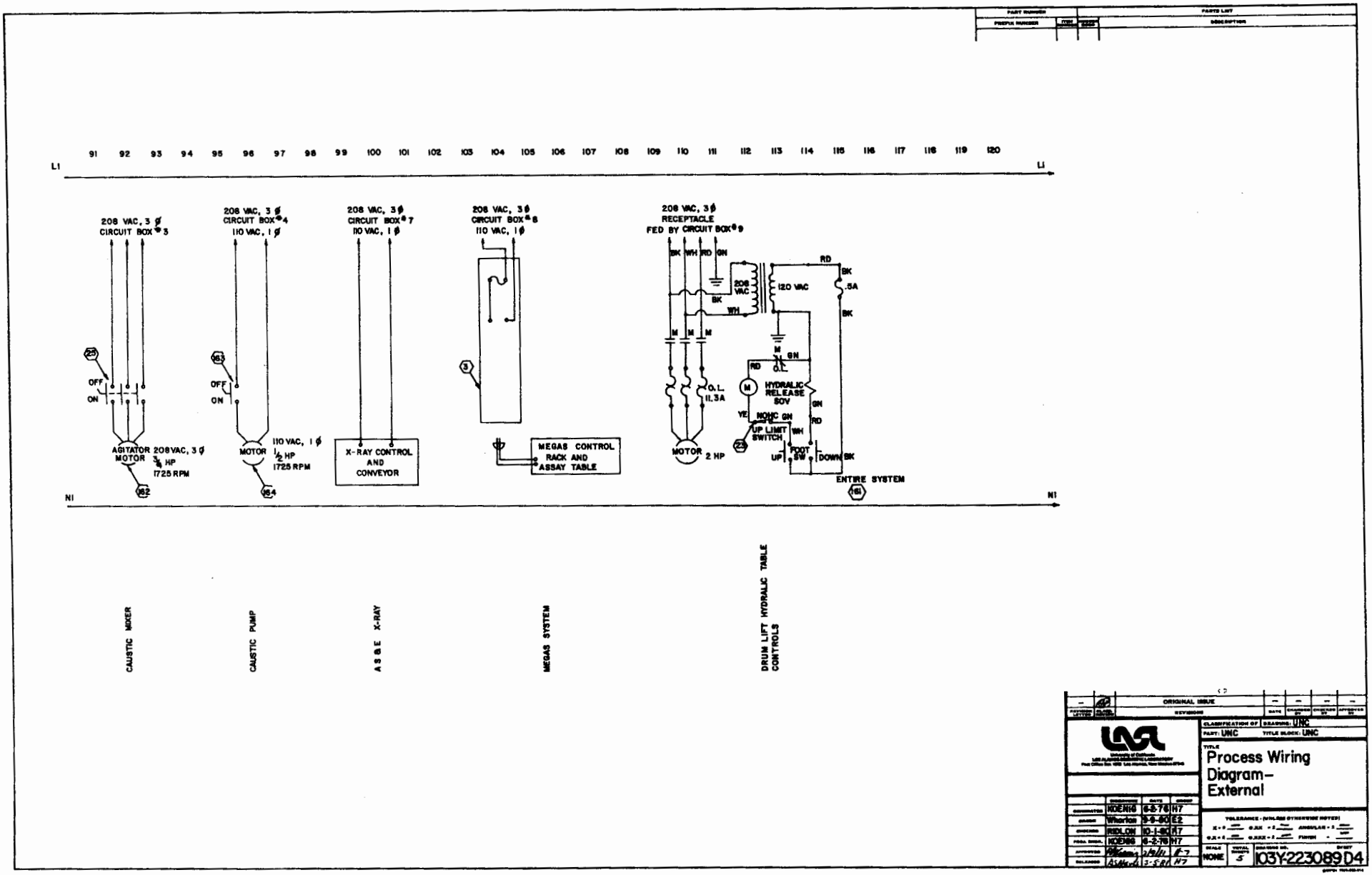
PART NUMBER
PREFIX NUMBER
PARTS LIST
DESCRIPTION
91 92 93 94 95 96 97 98 99 100 101 102 103 104 105 106 107 108 109 110 111 112 113 114 115 116 117 118 119 120
L1
N1
208 VAC, 3 ϕ
CIRCUIT BOX #3
OFF
ON
AGITATOR MOTOR
208 VAC, 3 ϕ
3/4 HP
1725 RPM
62
208 VAC, 3 ϕ
CIRCUIT BOX #4
110 VAC, 1 ϕ
63
OFF
ON
MOTOR
110 VAC, 1 ϕ
1/2 HP
1725 RPM
64
208 VAC, 3 ϕ
CIRCUIT BOX #7
110 VAC, 1 ϕ
X-RAY CONTROL AND CONVEYOR
208 VAC, 3 ϕ
CIRCUIT BOX #8
110 VAC, 1 ϕ
5
7
MEGAS CONTROL RACK AND ASSAY TABLE
208 VAC, 3 ϕ
RECEPTACLE
FED BY CIRCUIT BOX #9
BK WH RD GN
208 VAC
120 VAC
RD
BK
.5A
BK
BK
WH
M M M
M GN
RD O.L.
O.L.
11.3A
M
HYDRALIC RELEASE SOV
GN
RD
YE NONC GN
UP LIMIT SWITCH
WH
23
MOTOR 2 HP
FOOT SW
UP
DOWN BK
ENTIRE SYSTEM
161
CAUSTIC MIXER
CAUSTIC PUMP
A S & E X-RAY
MEGAS SYSTEM
DRUM LIFT HYDRALIC TABLE CONTROLS
ORIGINAL ISSUE
REVISIONS
DATE
CLASSIFICATION OF DRAWING: UNC
PART: UNC
TITLE BLOCK: UNC
TITLE
Process Wiring Diagram– External
DESIGNED HOENIG 6-8-78 H7
DRAWN Wharton 9-9-80 E2
CHECKED RIDLON 10-1-80 K7
FOREM. DRAFT. HOENIG 6-2-78 H7
APPROVED 2/9/81 K7
RELEASED 3-5-81 H7
SCALE NONE
TOTAL SHEETS 5
DRAWING NO. 103Y-223089D4
SHEET

PART NUMBER		PARTS LIST	
PREFIX NUMBER	ITEM NUMBER	QUANTITY REQUIRED	DESCRIPTION

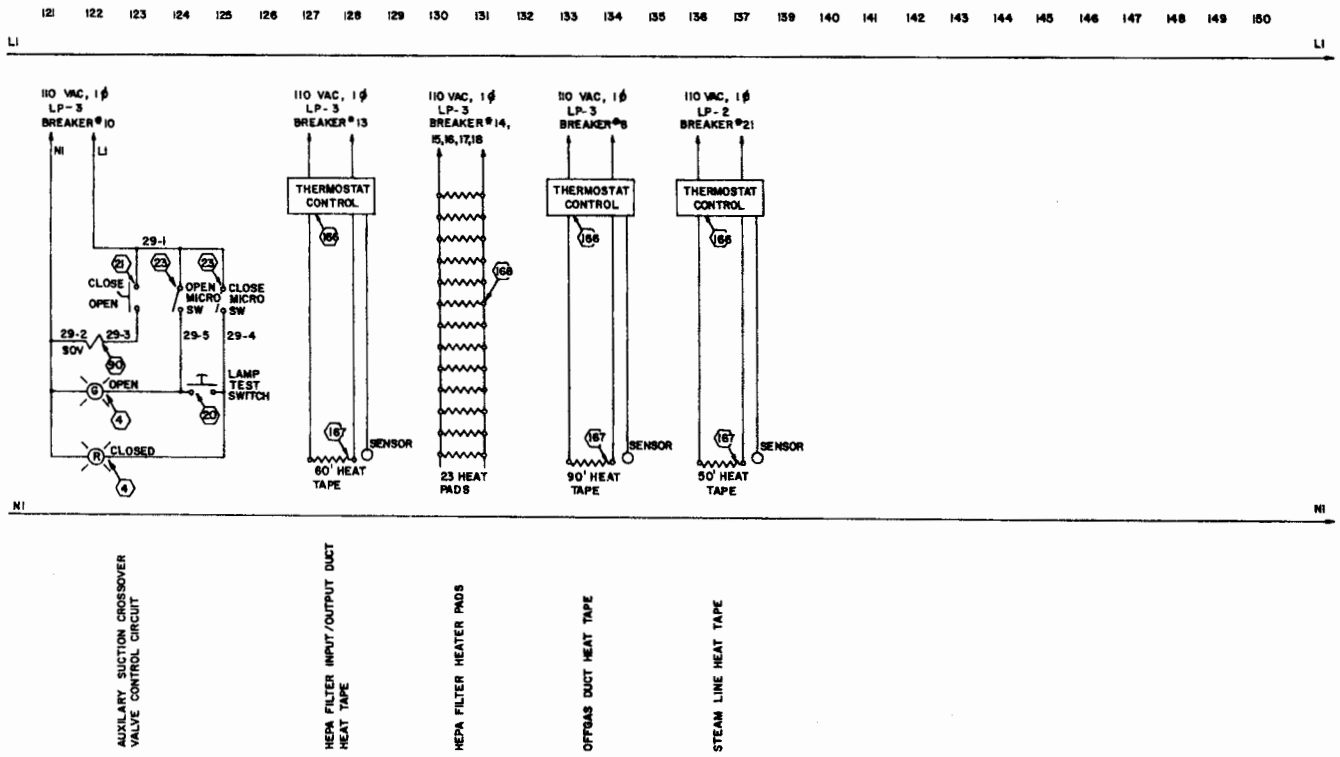

—		ORIGINAL ISSUE	—	—	—	—
REVISION LETTER	REVISION NUMBER	REVISIONS	DATE	DRAWN BY	CHECKED BY	APPROVED BY

University of California
LOS ALAMOS SCIENTIFIC LABORATORY
Post Office Box 1663 Los Alamos, New Mexico 87544

CLASSIFICATION OF DRAWING: UNC
PART: UNC TITLE BLOCK: UNC

TITLE
Process Equipment Wiring Diagram-External

	SIGNATURE	DATE	GROUP
DESIGNED BY	KOENIG	6-2-78	H7
DRAWN	Wharton	9-9-80	E2
CHECKED	BELLON	10-1-80	H7
PROJ. ENGR.	KOENIG	8-8-78	H7
APPROVED	Williams	2/6/81	H7
DIS. CHECK	Williams	2-5-81	H7

TOLERANCES - (UNLESS OTHERWISE NOTED)
X = ± ; 0.XX = ± ; ANGULAR = ± ;
0.X = ± ; 0.XXX = ± ; FINISH = ;

SCALE	TOTAL SHEETS	DRAWING NO.	SHEET
NONE	5	103Y-223089D5	

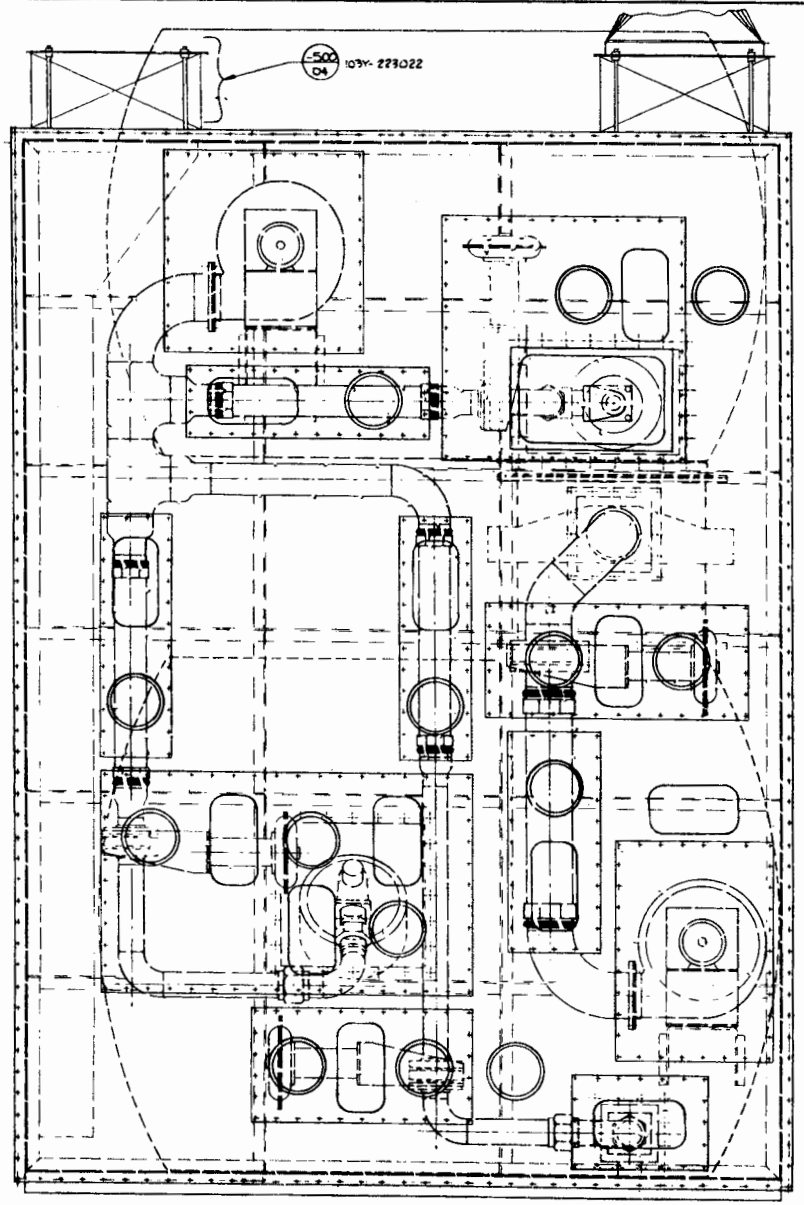

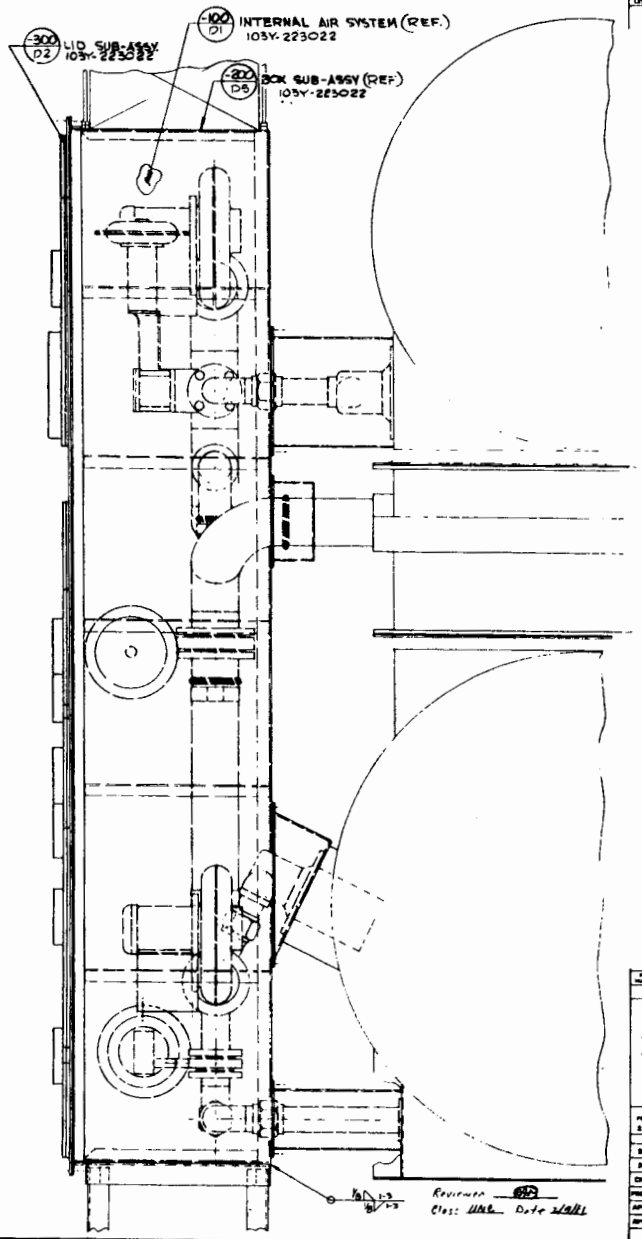

REV LETTER	ENGINEERING CHANGE ORDER	DATE	CHECKED BY	ENGINEER BY	APPROVED BY

PART NUMBER	DESCRIPTION
	BILL OF MATERIAL

los alamos scientific laboratory

UNIVERSITY OF CALIFORNIA — LOS ALAMOS, NEW MEXICO

TOLERANCES: UNLESS OTHERWISE NOTED FRACTIONAL ± ; DECIMAL ± ; ANGULAR ±

	SIGNATURE	DATE	GROUP
DESIGN	S. Dilatti	5/3/76	WX-4
DR NOW	S. Dilatti	5/3/76	WX-4
CHECKED	WAHN	5/6/76	WX-4
PROJ. ENGR.	[illegible]	5/10/76	H-7
APPROVED	R. Rodenberg	5/10/76	H-7
APPROVED	D. Sisk	5/10/76	H-7

TITLE
TREATMENT DEVELOPMENT FACILITY
COMBUSTION AIR SYSTEM

PART NO.

D.E. NO. | L.A. NO.

SCALE	TOTAL SHEETS	DRAWING NO.	SHEET NO.	REV
1/8	2	103Y-223101	D 1	

Revision [illegible]
Class: UNCL Date 2/10/81

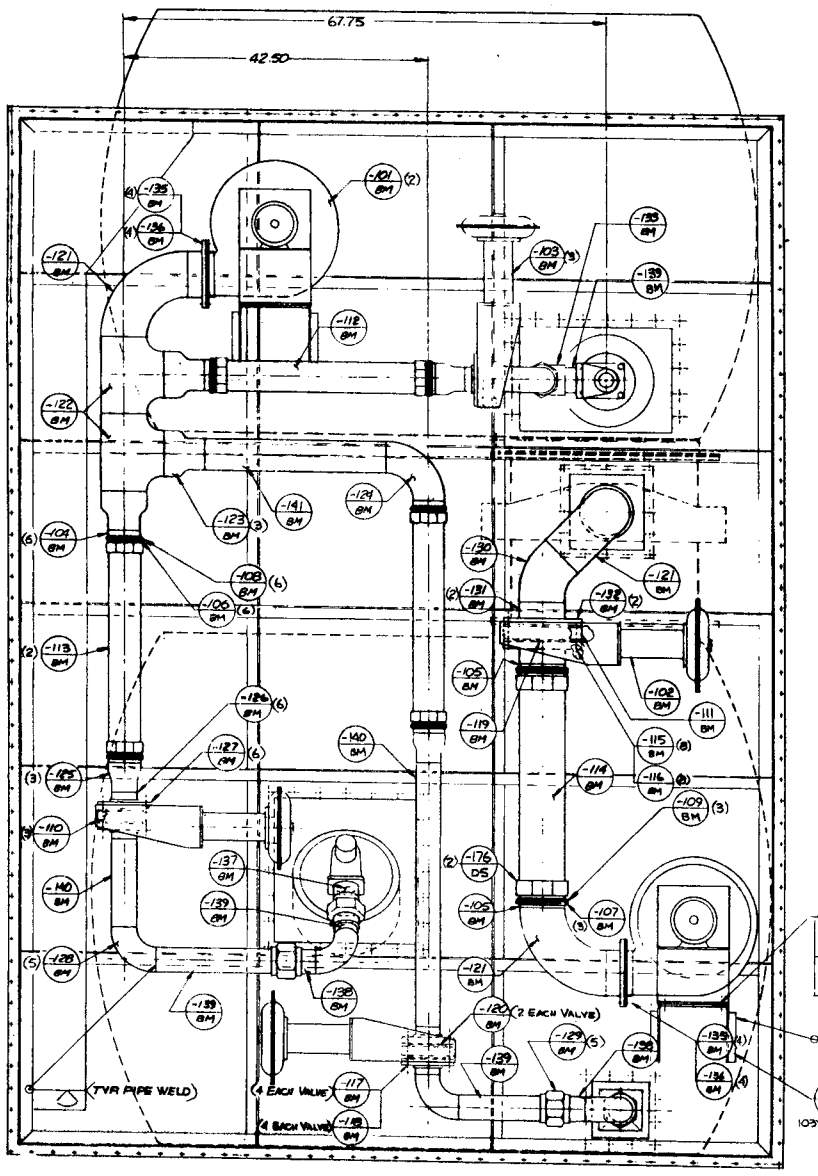

(-100 D1) SUB-ASSY 1031-223022

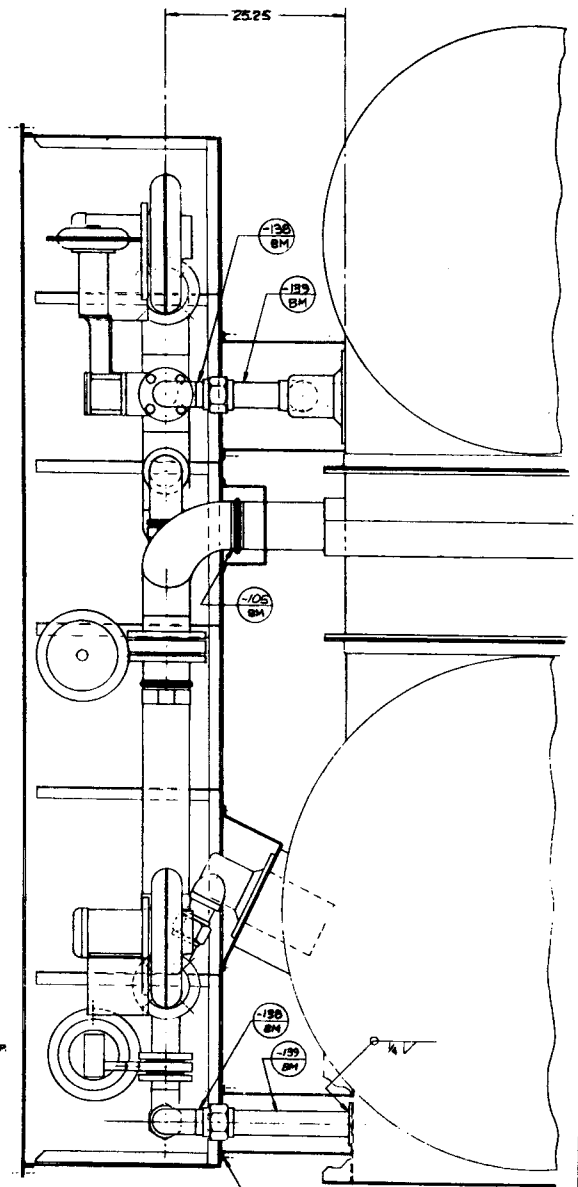

-147	8		3/8 WASHER-LOCK -STL
-146	8		3/8-16 HEX. HD. NUT -STL
-145	8		3/8-16 x 1" LG. HEX. HD. CAP SCREW -STL
-144	76		1/4 WASHER, FLAT -STL
-143	76		1/4-20 UNC HEX. HD. NUT -STL
-142	76		1/4-20 UNC x 3/4 LG. HEX. HD. CAP SCREW -STL.
-141	1		4" PIPE x LENGTH REQ'D., NO THDS. -STL.
-140	2		3" PIPE x LENGTH REQ'D., NO THDS. -STL.
-139	6		3" PIPE x LENGTH REQ'D., THD. ONE END -STL.
-138	4		3" PIPE x 2 1/2" LONG, THD. ONE END -STL.
-137	1		3" NIPPLE, CLOSE -PIPE -STL.
-136	8		3/4-16 UNC HX. HD. NUT -STL.
-135	8		3/4-16 UNC x 1 3/4" LG. HX. HD. BOLT -STL.
-134	1		1" 150# HALF COUPLING -SCREWED -STL. -SEE DWG 'A' SHT. D.8
-133	1		3" 3000# SOCKET WELDING ELBOW -STL
-132	2		6" 150# ASA LAP JOINT FLANGE -STL.
-131	2		6" SCH. 40 LAP JOINT STUB END -ASTM LG. -WELD TYPE -STL.
-130	1		6" SCH. 40 45° LG. RADIUS ELBOW -WELD TYPE -STL.
-129	5		3" 150# UNION -SCREWED TYPE -STL.
-128	5		3" SCH. 40 90° LG. RADIUS ELBOW -WELD TYPE -STL.
-127	6		3" 150# ASA LAP JOINT FLANGE -STL.
-126	6		3" SCH. 40 LAP JOINT STUB END ASTM LENGTH -STL.
-125	3		4" x 3" SCH. 40 CONCENTRIC REDUCER -WELD TYPE -STL
-124	1		4" SCH. 40 90° LG. RADIUS ELBOW -WELD TYPE -STL.
-123	3		6" x 4" SCH. 40 CONCENTRIC REDUCER -WELD TYPE -STL.
-122	2		6" SCH. 40 TEE -WELD TYPE -STL.
-121	3		6" SCH. 40 90° LG. RADIUS ELBOW -WELD TYPE -STL
-120	6		3" NOM. DIA. FLAT RING GASKET -ASBESTOS
-119	2		6" NOM. DIA. FLAT RING GASKET -ASBESTOS
-118	12		5/8"-11 UNC. HX. HD. NUT -STL
-117	12		5/8"-11 UNC x 5" LG. HX. HD. BOLT -STL.
-116	8		3/4"-10 UNC HX. HD. NUT -STL.
-115	8		3/4"-10 UNC. x 3 1/2" LG. HX. HD. BOLT -STL.
-114	1		6" FLOW TRANSDUCER - DATAMETRICS SERIES 1000-6C - VERTICAL MOUNTING
-113	2		4" FLOW TRANSDUCER - DATAMETRICS SERIES 1000-4C - VERTICAL MOUNTING
-112	1		4" FLOW TRANSDUCER - DATAMETRICS SERIES 1000-4C HORIZONTAL MOUNTING
-111	1		6" BUTTERFLY VALVE 125-150 LB. ANSI, FISHER CONTROL TYPE 7800 MED. PATTERN
-110	3		3" BUTTERFLY VALVE 125-150 LB. ANSI, FISHER CONTROL TYPE 7800 MED. PATTERN
-109	3		7.31 NOM. DIA. V-RETAINER COUPLING, AEROQUIP; MARMAN INDUSTRIAL PROD.# MV84682 KJ 731 V.
-108	6		5.18 NOM. DIA. V-RETAINER COUPLING, AEROQUIP; MARMAN INDUSTRIAL PROD.# MV84682 KJ 518 V
-107	3		6 3/4" NOM. I.D. O-RING 6.234 I.D. x .139 WALL, NEOPRENE, 70 DUROMETER HARDNESS PARKER No. 239
-106	6		4 3/4" NOM. I.D. O-RING 4.234 I.D. x .139 WALL, NEOPRENE, 70 DUROMETER HARDNESS PARKER No. 244
-105	3		6" WELDING FLANGE, O-RING TYPE, AEROQUIP; MARMAN INDUSTRIAL PROD.# MFM 5701 C 600
-104	6		4" WELDING FLANGE, O-RING TYPE, AEROQUIP; MARMAN INDUSTRIAL PROD.# MFM 5701 C 400
-103	3		POWER ACTUATOR, PNEUMATIC, FISHER CONTROLS, TYPE 656, ACT. SIZE 30, BRACKET MNTD., 3/8" SHAFT
-102	1		POWER ACTUATOR, PNEUMATIC, FISHER CONTROLS, TYPE 656, ACT. SIZE 30, BRACKET MNTD., 1/2" SHAFT
-101	2	-100	BLOWER, AMERICAN FAN MOD. AF-12 (EXISTING)

BILL OF MATERIAL

los alamos scientific laboratory
UNIVERSITY OF CALIFORNIA — LOS ALAMOS, NEW MEXICO

DESIGN	R. Schwartz	1/29/76	WX-4
DR. APPR	R. Schwartz	1/29/76	WX-4
CHECKED	J. Mann	5/18/76	WX-4
PROJ. ENGR.	R. Dennis	5/20/76	H-7
APPROVED	R. Dennis	5/20/76	H-7
APPROVED	J. S. Nelson	2-5-81	H-7

TOLERANCES: UNLESS OTHERWISE NOTED ±.005

TITLE: TREATMENT DEVELOPMENT FACILITY COMBUSTION AIR SYSTEM CONTAINMENT BOX

PART NO.

B.A. NO. L.A. NO.

SCALE 1/8 | SHEET 2 | DRAWING NO. 1031-223101 | SHEET NO. D 2 | REV

Revision — Chg.: UNR Date 2/18/81

PART NUMBER			PARTS LIST
PREFIX NUMBER	SUFFIX NUMBER	REVISION CODE	DESCRIPTION

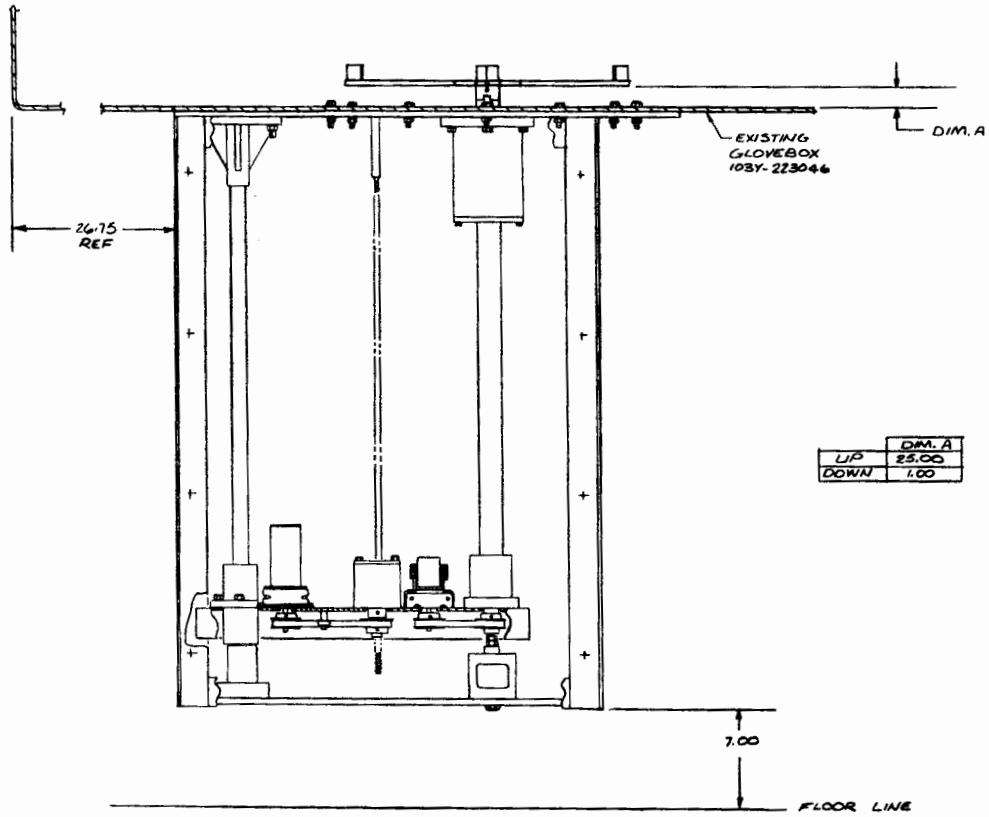

	DIM. A
UP	25.00
DOWN	1.00

REVISION LETTER	REVISION NUMBER	REVISIONS	DATE	DR. CHECKED BY	DR. ENGINEER BY	DR. APPROVED BY
–		ORIGINAL ISSUE		–	–	–

University of California
LOS ALAMOS SCIENTIFIC LABORATORY
Post Office Box 1663 Los Alamos, New Mexico 87545

CLASSIFICATION OF DRAWING: UNC
PART: UNC TITLE BLOCK: UNC

TITLE
TDF-MEGAS
ROTATING-
TRANSLATING
TABLE

	SIGNATURE	DATE	GROUP
DRAWN BY	DRAPER R.	5-75	H7
DESIGNED	M. BRATTON	1-81	E2
CHECKED	M. BRATTON	1-81	E2
FIELD ENGR.	DRAPER R.	5-75	H7
APPROVED BY	[illegible]	2-2-81	H7
ENGINEERING	[illegible]	10-5-81	H7

TOLERANCE - [UNLESS OTHERWISE NOTED]
X = ± ___ 0.XX = ± ___ ANGULAR = ± ___
0.X = ± ___ 0.XXX = ± ___ FINISH = ___

SCALE	TOTAL SHEETS	DRAWING NO.	SHEET	REV.
1/4	14	103Y-223102	D 1	

(DPO) 1000-HEL-014

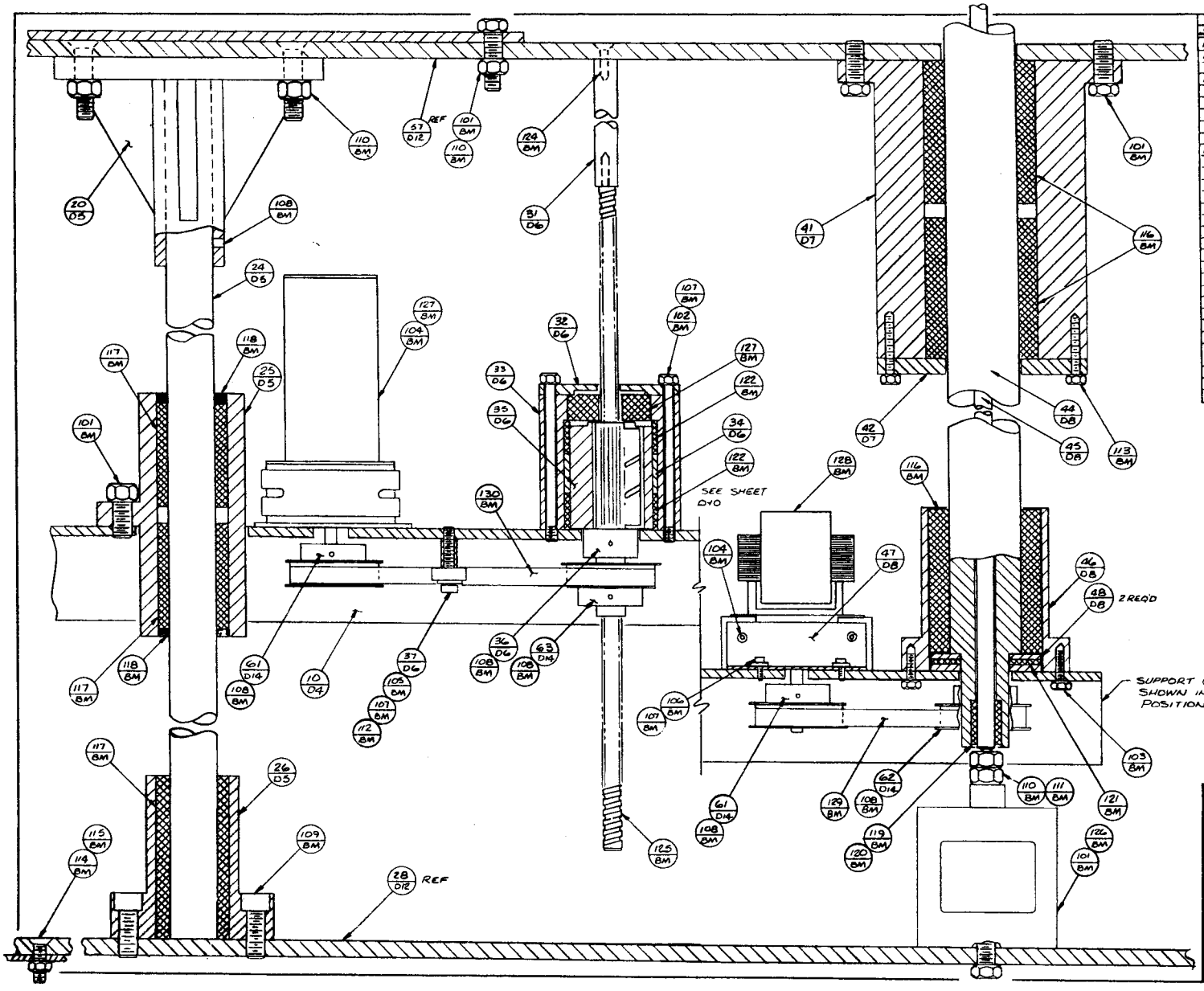

ITEM NUMBER	REQUIRED FROM	PARTS LIST DESCRIPTION
101	22	3/8-16 x 1" LONG HEX HEAD BOLT
102	4	1/4-20 x 3 1/2" LONG HEX HEAD BOLT
103	4	1/4-20 x 3/4" LONG HEX HEAD BOLT
104	5	#6-32 x 1/2" LONG SOCKET HEAD CAP SCREW
105	1	1/4-20 x 1 1/4" LONG SOCKET HEAD CAP SCREW
106	2	1/4-20 x 1/2" LONG SOCKET HEAD CAP SCREW
107	7	1/4" FLAT WASHER
108	12	#6-32 x 3/8" LONG SET SCREW
109	4	3/8-16 x 1" LONG SOCKET HEAD CAP SCREW
110	18	3/8-16 NUT
111	1	3/8" DIA HARD STEEL BALL
112	1	1/4 ID x 3/8 OD BALL BEARING
113	4	#6-32 x 1" LONG HEX HEAD SCREW
114	10	1/4-20 x 1" LONG FLAT HEAD SCREW
115	10	1/4-20 NUT
116	3	2.375 OD x 1.50 ID x LONG BALL BUSHING
117	3	1.562 OD x 1.00 ID x LONG BALL BUSHING
118	2	1.562 OD x 1.00 ID GREASE SEAL
119	2	.625 OD x .375 ID x LONG BALL BUSHING
120	2	.625 OD CLIP
121	1	2.375 OD x 1.00 ID x .125 THK THRUST BEARING
122	2	2.000 OD x 1.812 ID x .75 LONG BALL BUSHING
123	1	1.750 OD x .500 ID x .50 THK BALL BEARING
124	1	1/4-20 x 3/4" LONG FLAT HEAD SCREW
125	1	3/8" BALL SCREW ASSY - WARNER # R-0308
126	1	0-50 LB LOAD CELL
127	1	MOTOR - MOTORMATIC # E550M6HP30 WITH SPEED CONTROL # E550M
128	1	MOTOR - 15 RPM, 450 IN OZ TORQUE
129	1	BELT -
130	1	BELT -

REVISIONS				
—	—	ORIGINAL ISSUE	—	—

University of California
LOS ALAMOS SCIENTIFIC LABORATORY
Post Office Box 1663, Los Alamos, New Mexico 87545

CLASSIFICATION OF DRAWING: UNC
PART: UNC TITLE BLOCK: UNC

TITLE
TDF - MEGAS
ROTATING - TRANSLATING
TABLE

	SIGNATURE	DATE	GROUP
ORIGINATOR	DRAPER	5-7-75	H7
DRAWN	WHORTON	1-81	E2
CHECKED	WHORTON	1-81	E2
FINAL CHECK	DRAPER	5-7-75	H7
APPROVED	[illegible]	2/9/81	H7
RELEASED	ASMUSSEN	3-5-81	H7

TOLERANCE - (UNLESS OTHERWISE NOTED)
X = ± — 0.XX = ± — ANGULAR = ± —
0.X = ± — 0.XXX = ± — FINISH —

SCALE	TOTAL SHEETS	DRAWING NO.	REVISION
FULL	14	103Y-223102	D 2

☆ U.S. GOVERNMENT PRINTING OFFICE:1985—576-034 / 20052