LANL rec'd 198
11/14/89

New Mexico Health and Environment Department

CERTIFIED MAIL
RETURN RECEIPT REQUESTED

GARREY CARRUTHERS
Governor

DENNIS BOYD
Secretary

MICHAEL J. BURKHART
Deputy Secretary

RICHARD MITZELFELT
Director

November 8, 1989

Mr. James R. Anderson
Acting Area Manager
DOE Area Office
Los Alamos, NM 87544

RE: NM 0890010515
RCRA Operating Permit

Dear Mr. Anderson:

Enclosed is the RCRA operating permit for Los Alamos National Laboratory. The Environmental Improvement Division received numerous comments and suggestions from the public, EPA, DOE and LANL during the review and comment period on the draft permit. For your information a summary of changes made to the draft and a copy of the EID response to comments are enclosed.

You have the right to appeal this decision to the Environmental Improvement Board in accordance with the New Mexico Hazardous Waste Management Regulations (HWMR-5), as amended 1989, section 902.G. Otherwise, the permit will become effective in accordance with HWMR-5, Part IX, sections 902.F. and 902.G. Briefly, the effective date will be 30 days from your receipt of this permit unless the decision is appealed to the Environmental Improvement Board.

If you have any questions on the technical content of the permit, please contact Dr. A. Elizabeth Gordon on the Hazardous Waste Program staff at 827-2934. Questions of a legal nature may be addressed to Ms. Gini Nelson of the Health and Environment Department's Office of General Counsel at 827-2854.

Sincerely,

Richard Mitzelfelt
Director

Copy of permit in magazine file

Encls.

cc: Ms. Lynn Prince, EPA 6H-HS, w/encls.
Mr. Michael Brown, EID District II, w/out encls.

— ENVIRONMENTAL IMPROVEMENT DIVISION
Harold Runnels Building
1190 St. Francis Dr.
Santa Fe, New Mexico 87503

8662

Hazardous Waste Facility Permit

PERMITTEE: U.S. Department of Energy
University of California Regents
LOCATION: Los Alamos National Laboratory,
Los Alamos, NM 87545

ID NUMBER: NM0890010515

PERMIT NUMBER:
NM 0890010515-1

Pursuant to the Solid Waste Disposal Act, as amended by the Resource Conservation and Recovery Act (RCRA), as amended (42 U.S.C. 6901, *et seq.*), and the New Mexico Hazardous Waste Act (§§ 74-4-1 *et seq.* NMSA 1978], a permit is issued to the U.S. Department of Energy's Los Alamos Area Office and the University of California Regents, doing business as Los Alamos National Laboratory, (hereafter called the Permittee) to operate a hazardous waste incinerator, container storage and tank treatment and storage facility at the location stated above.

The Permittee must comply with all the terms and conditions of this permit. This permit consists of the conditions contained herein including the attachments. Applicable provisions of regulations cited are those which are in effect on the effective date of this permit, New Mexico Hazardous Waste Management Regulations (HWMR-5, as amended 1989). This permit shall become effective in accordance with HWMR-5, Part IX, sections 902.F. and 902.G. and shall run for a period of ten years.

This permit is based on the provisions of HWMR-5. This permit is also based on the assumption that all information contained in the permit application is accurate and that the facility will be operated as specified in the application. The permit application consists of information submitted on March 27, 1986; revised on November 13, 1986 and November 25, 1987; and supplemented on November 8, 1988 and through numerous technical discussions.

Any inaccuracies found in the information may be grounds for the termination or modification of this permit and potential enforcement action.

Signed this 8th day of November, 1989

by _____
Richard Mitzelfelt, Director, N.M.E.I.D.

New Mexico
Health and Environment Department
Environmental Improvement Division

CONTENTS

Module I Standard Conditions	PAGE
A. Effect of Permit	12
B. Permit Actions	12
C. Severability	12
D. Duties and Requirements	13
1. Duty to Comply	13
2. Duty to Reapply	13
3. Permit Extension	13
4. Need to Halt or Reduce Activity not a Defense	13
5. Duty to Mitigate	13
6. Proper Operation and Maintenance	13
7. Duty to Provide Information	14
8. Inspection and Entry	14
9. Monitoring	14
10. Notice of Planned Physical Facility Changes	15
11. Certification of Construction or Modification	15
12. Anticipated Noncompliance	16
13. Transfer of Permit	16
14. Compliance Schedules	16
15. Other Information	16
E. Signatory Requirements	16
F. Confidential Information	16
G. Documents to be Maintained at Facility	16
H. Permit Construction	17
1. Citing	17
2. Gender	17
3. Definitions	17

Module II General Facility Conditions PAGE

A. Design and Operation of the Facility 19

B. Required Notice 19

1. Foreign Wastes 19

2. Off-site Wastes 19

C. Waste Analysis 19

1. Waste Analysis Plan 19

2. Quality Assurance 19

3. Waste Segregation 19

4. Annual Verification 20

D. Security 20

E. Inspection Requirements 20

1. Inspection Plan 20

2. Facility Release Inspection 20

F. Personnel Training 20

G. Requirements for Ignitable, Reactive or Incompatible Wastes 21

H. Preparedness and Prevention 21

1. Required Equipment 21

2. Testing and Maintenance of Equipment 21

3. Access to Communications or Alarm System 21

4. Required Aisle Space 21

I. Contingency Plan 21

1. Implementation of the Plan 21

2. Amendment of the Plan 21

3. Copies of the Plan 21

4. Emergency Coordinator 21

J. Manifest System 21

K. Recordkeeping and Reporting 22

1. Facility Operating Record 22

2. Reports 23

L. Closure 24

1. Performance Standard 25

2. Amendment of Closure Plans 25

3. Notification of Closure 25

4. Time Allowed for Closure 25

5. Disposal or Decontamination of Equipment 25

6. Certification of Closure 25

M. Movement Restriction 25

N. Spills 25

Module III Storage in Containers PAGE

A. Designated Storage Units 26

1. Technical Area-54, Area L 26

2. Technical Area-50 26

B. Authorized Wastes 27

1. Identification 27

2. Quantities 27

3. Land Ban 27

C. Containers 27

1. Capacity 27

2. Type 28

3. Quantity 28

4. Condition 28

5. Compatibility of Waste with Containers 29

6. Management 29

D. Containment 29

E. Ignitable or Reactive Wastes 29

F. Incompatible Wastes 29

G. Closure 29

H. Inspection 29

1. Inspection Plan 29

2. Spill Kits 29

3. Warning Signs 30

Module IV Treatment in Tanks PAGE

A. Designated Treatment Units 31

1. Batch Waste Treatment Unit 31

2. Technical Area-54, Area L 31

B. Authorized Wastes 31

1. Identification 31

2. Quantities 31

3. Additions to the List of Treated Wastes 31

4. Special Limitation 31

5. Land Ban 31

C. Design of Tanks 32

1. Batch Waste Treatment Unit 32

2. Technical Area-54, Area L 32

D. Operating Requirements 32

1. Batch Waste Treatment Unit 32

2. Technical Area-54, Area L 32

E. Inspections 33

1. Batch Waste Treatment Unit 33

2. Technical Area-54, Area L 33

3. Warning Signs 34

F. Response to Leaks or Spills 34

G. Certification of Repairs 34

H. Closure 34

1. Batch Waste Treatment Unit 34

2. Technical Area-54, Area L 34

Module V Controlled Air Incinerator Operation PAGE

A. General Conditions 36

1. Authorized Unit 36

2. Destruction and Removal Efficiency 36

3. Regulatory Compliance 36

B Waste Identification 36

1. Authorized Wastes 36

2. Prohibited Wastes 36

3. Physical Form 37

C. Waste Analyses 37

1. Waste Analysis Plan 37

2. Analysis of Waste Blends 37

3. Exclusion of Radionuclides 37

4. Exclusion of Metals 37

D. Principle Organic Hazardous Constituents 37

1. Routine Operation 37

2. Bulk-feed Operations 38

E. Monitoring 38

F. Operation 38

1. Total Chloride Content 38

2. Waste Feed Rates 38

3. Venturi Scrubber 39

4. High Efficiency Particulate Air Filters 39

5. Operating Temperatures 39

6. Effluent Control System Solution 39

7. Combustion Air 39

8. Total Hydrocarbon 40
9. Radioactivity 40
10. Automatic Shutdown 40
11. Waste Handling Practices 40
G. Effluent Control 41
1. Ash Control 41
2. Effluent Control System 41
H. Inspection 41
1. Spill Kits 41
2. Instrumentation 41
3. Warning Signs 42
4. Automatic Cutoff 42
I. Recordkeeping 42
1. Waste History 42
2. Waste Analysis 42
3. Inspections 42
4. Automatic Waste Feed Cutoff 42
5. Effluent Analysis 42
J. Closure 43
1. Incinerator Components 43
2. Effluent Control System 43
3. Waste Storage Tanks 43
4. Closure Residues 43

Module VI Storage in Tanks PAGE

A. Designated Storage Units 44
B. Authorized Wastes 44
1. Identification 44
2. Quantities 44
C. Tank Description 44
1. Capacity 44
2. Type 44
3. Quantity 44
4. Conditiion 44
5. Compatibility of Waste with Tanks 44
D. Containment 44
E. Ignitable or Reactive Wastes 44
F. Incompatible Wastes 45
G. Closure 45
H.. Inspection 45
1. Inspection Plan 45
2. Spill Kits 45
3. Accumulated Liquids 45
4. Repairs to Secondary Containment Structures 45
5. Warning Signs 45
6. Freeboard 45
I. Response to Leaks or Spills 46
J. Certification of Repairs 46

Module VII Industrial Incinerator Operation PAGE

A. General Conditions 47

1. Authorized Unit 47

2. Destruction and Removal Efficiency 47

B. Waste Identification 47

1. Authorized Wastes 47

2. Prohibited Wastes 47

C. Waste Analysis 47

1. Waste Analysis Plan 47

2. Batch Analysis 47

3. Initial Analysis 47

D. Waste Storage 48

E. Record Keeping 48

1. Waste History 48

2. Waste Analysis 48

3. Closure 48

F. Closure 48

FIGURES

1 Vicinity Map
2 Technical Areas Map
3 Technical Area 50-1
4 Technical Area 50-37
5 Technical Area 16 Incinerator
6. Technical Area 54, Area L
7. Technical Area 54 Area L Treatment Tanks Plan
8. Incinerator Process Diagram
9. Surface and Groundwater Sampling Locations
10. Facility Release Inspection Report

TABLES

I-1 Technical Area Zero Generation sites

II-1 Environmental Monitoring Locations

II-2 Sampling Parameters and Methods

PERMIT ATTACHMENTS

A. Waste Analysis Plan & Waste Segregation Procedures

B. Inspection Plan

C. Personnel Training

D. Contingency Plan

E. Closure Plans

F. Container Management

G. Authorized Wastes

H. Batch Waste Treatment Unit Operation

I. Additional Data Submittal Schedule

J. Incinerator Operational Safety

K. Hazardous Waste Management Regulations

MODULE I STANDARD CONDITIONS

*I.*A. EFFECT OF PERMIT

The Permittee is allowed to incinerate, treat and store on site hazardous waste in accordance with the conditions of this permit. Any incineration, treatment or storage of hazardous waste not authorized in this permit or conducted under interim status, as defined by the Resource Conservation and Recovery Act (RCRA), is prohibited. Compliance with this permit constitutes compliance, for purposes of enforcement, with the New Mexico Hazardous Waste Act (Section 74-4-1 *et seq.* NMSA 1978) and the New Mexico Hazardous Waste Management Regulations (HWMR-5, as amended 1989), Parts V, VII and IX only for those management practices specifically authorized by this permit. The Permittee is also required to comply with HWMR-5, Parts I, II, III and IV to the extent the requirements of those Parts are applicable. The Permittee must also comply with all applicable self-implementing provisions imposed by the Resource Conservation and Recovery Act statute and/or the HWMR-5, Part VIII. A complete RCRA permit consists of this permit and a US EPA permit issued under the provisions of the Hazardous and Solid Waste Amendments of 1984 (HSWA) which addresses the portion of the RCRA program for which the State is not authorized. Issuance of this permit does not convey property rights of any sort or any exclusive privilege; nor does it authorize any injury to persons or property, any invasion of other private rights, or any infringement of State or local law or regulations. Compliance with the terms of this permit does not constitute a defense to any action brought under Sections 3008(a), 3008(h), 3013 or 7003 of RCRA; Sections 106(a), 104 or 107 of the Comprehensive Environmental Response, Compensation, and Liability Act of 1980 (42 U.S.C. 9601 *et seq.*, commonly known as CERCLA); Sections 74-4-1 *et seq.* NMSA 1978, or any other law governing protection of public health or the environment.

*I.*B. PERMIT ACTIONS

This permit may be modified, revoked and reissued, or terminated for cause as specified in HWMR-5, as amended 1989, Part IX, Subpart D, included herein by reference. The filing of a request for a permit modification, revocation and reissuance, or termination, or the notification of planned changes or anticipated noncompliance on the part of the permittee, does not stay the applicability or enforceability of any permit condition. Review of any application for a permit renewal shall consider improvements in the state of control and measurement technology as well as changes in applicable regulations and laws.

*I.*C. SEVERABILITY

The provisions of this permit are severable. If any provision of this permit, or the application of any provision of this permit to any circumstance, is held invalid,

the application of such provision to other circumstances and the remainder of this permit shall not be affected thereby.

I.D. DUTIES AND REQUIREMENTS

1. Duty to Comply. The Permittee shall comply, in accordance with HWMR-5, as amended 1989, Part IX, 40 CFR section 270.30(a), with all conditions of this permit, except to the extent and for the duration such noncompliance is authorized by an emergency permit issued in accordance with HWMR-5, as amended 1989, Part IX, 40 CFR section 270.61. Any permit noncompliance by any Permittee employee or contractor, other than noncompliance authorized by an emergency permit, constitutes a violation of the New Mexico Hazardous Waste Act and is grounds for enforcement action, permit termination, revocation and reissuance, modification, or denial of a permit renewal application.

2. Duty to Reapply. In accordance with HWMR-5, as amended 1989, Part IX, 40 CFR section 270.30(b), if the Permittee wishes to continue an activity allowed by this permit after the expiration date of this permit, the Permittee shall submit an administratively complete application for a new permit at least 180 calendar days before this permit expires. [HWMR-5, as amended 1989, Part V, 40 CFR section 270.10(h)]

3. Permit Expiration. Pursuant to HWMR-5 Part IX, 40 CFR 270.50, this permit shall be effective for the fixed term of ten years. As long as the state is the permit-issuing authority, this permit and all conditions herein will remain in effect beyond the permit's expiration date, if the Permittee has submitted a timely, complete application (see HWMR-5, Part IX, 40 CFR 270.10, 270.13 through 270.29) and, through no fault of the Permittee, the Director has not issued a new permit, as set forth in HWMR-5, Part IX, 40 CFR 270.51.

4. Need to Halt or Reduce Activity Not a Defense. In accordance with HWMR-5, as amended 1989, Part IX, 40 CFR section 270.30(c), it shall not be a defense for the Permittee, in an enforcement action, that it would have been necessary to halt or reduce the permitted activity in order to maintain compliance with the conditions of this permit.

5. Duty to Mitigate. In accordance with HWMR-5, as amended 1989, Part IX, 40 CFR section 270.30(d), the Permittee shall take all reasonable steps to minimize or correct any adverse impact on human health or the environment resulting from noncompliance with this permit.

6. Proper Operation and Maintenance. In accordance with HWMR-5, as amended 1989, Part IX, 40 CFR section 270.30(e), the Permittee shall at all times properly operate and maintain all facilities and systems of treatment and control and related appurtenances which are installed or used by the Permittee to achieve compliance with the conditions of this permit. Proper operation and maintenance include effective performance, adequate funding, adequate operator staffing and training, and adequate laboratory and process controls, including appropriate quality assurance procedures. This provision requires the operation of back-up or auxiliary facility or similar systems only when necessary to achieve compliance with the conditions of this permit.

7. Duty to Provide Information. In accordance with HWMR-5, as amended 1989, Part IX, 40 CFR section 270.30(h), the Permittee shall furnish to the Director, within a reasonable time, any relevant information which he may request to determine whether cause exists for modifying, revoking and reissuing, or terminating this permit, or to determine compliance with this permit. The Permittee shall also furnish to the Director, upon request, copies of records required to be kept by this permit. [HWMR-5, as amended 1989, Part V, 40 CFR section 264.74(a)]

8. Inspection and Entry. In accordance with HWMR-5, as amended 1989, Part IX, 40 CFR section 270.30(i), the Permittee shall allow the Director or any authorized representative, upon the presentation of credentials and other documents as may be required by law, to:

   a. Enter at reasonable times upon the Permittee's premises where a regulated activity is located or conducted, or where records must be kept under the conditions of this permit;

   b. Have access to and copy, at reasonable times, any unclassified records that must be kept under the conditions of this permit;

   c. Inspect at reasonable times any facility, equipment (including monitoring and control equipment), practices, or operations regulated or required under this permit; and,

   d. Sample or monitor, at reasonable times, for the purpose of assuring permit compliance or as otherwise authorized by the New Mexico Hazardous Waste Act, any substances or parameters at any location.

   e. The Director recognizes that the Permittee operates in some cases under security restrictions imposed by the Atomic Energy Act (42 USC 2011 *et seq.*) and the regulations promulgated thereunder, and by other federal laws and regulations. Should conflict arise under this permit section, the Director and the Permittee shall cooperate in working with the appropriate Federal agency to obtain access approval. Nothing in this permit section shall be construed to deny access authorized by the Resource Conservation and Recovery Act.

9. Monitoring.

   a. Samples and measurements taken for the purpose of monitoring shall be representative of the monitored activity. The method used to obtain a representative sample of the waste to be analyzed must be an accepted and appropriate method such as described in Test Methods for Evaluating Solid Waste: Physical/Chemical Methods SW-846, 1986, as revised, or an equivalent method. Laboratory analytical methods must be those specified in SW-846, 1986 as revised; Standard Methods for the Examination of Water and Wastewater, Fifteenth Edition, 1980 and 1981 Supplement, or current edition; or an equivalent method, as specified in the Waste Analysis Plan, Permit Attachment A.

   b. The Permittee shall retain records of all monitoring information, including all calibration and maintenance records and all original strip chart recordings for continuous monitoring instrumentation, copies of all

reports and records required by this permit, the certification required by HWMR-5, as amended 1989, Part V, 40 CFR 264.73(b)(9), and records of all data used to complete the application for this permit for a period of at least 3 years from the date of the sample, measurement, report, record, certification, or application. These periods may be extended by request of the Director at any time and are automatically extended during the course of any unresolved enforcement action regarding this facility. The Permittee shall maintain records from all ground-water monitoring wells and associated ground-water surface elevations for the active life of the fgacility. [HWMR-5, as amended 1989, Part V, 40 CFR 264.74(b) and 270.30(j)(2)]

c. Pursuant to HWMR-5, Part IX, 40 CFR 270.30(j)(3), records of monitoring information shall specify:

   i. The dates, exact place, and times of sampling or measurements;

   ii. The individuals who performed the sampling or measurments;

   iii. The dates analyses were performed;

   iv. The individuals who performed the analyses;

   v. The analytical techniques or methods used; and

   vi. The results of such analyses.

10. Notice of Planned Physical Facility Changes. The Permittee shall give notice to the Director, as soon as possible, of any planned physical alterations or additions to the permitted facility which may impact any procedure or system of treatment, storage or control, or any related appurtenances, installed or used by the Permittee to achieve compliance with this permit. Physical alterations or additions shall include all hazardous waste activities and associated underground tanks. Construction of new units may not begin until a permit or permit modification has been issued.

11. Certification of Construction or Modification. The Permittee may not commence incineration, treatment or storage of waste at the modified unit until:

   a. The Permittee has submitted to the Director, by certified mail or hand delivery, a letter signed by the Permittee and a registered professional engineer, stating that the unit has been constructed or modified in compliance with the permit; and

   b. (i) The Director or his designee has inspected the modified or newly constructed unit and finds it is in compliance with the conditions of the permit; or

      (ii) The Director, or his designee, has either waived the inspection or has not, within 15 calendar days, notified the Permittee of his intent to inspect.

12. Anticipated Noncompliance. The Permittee shall give advance notice to the Director of any planned changes in the permitted facility or activity which may result in noncompliance with permit requirements.

13. Transfer of Permit. This permit may be transferred to a new owner or operator pursuant to HWMR-5, as amended 1989, Part IX, 40 CFR section 270.40. Before transferring ownership or operation of the facility during its operating life, the Permittee shall notify the new owner or operator in writing of the requirements of HWMR-5, as amended 1989, Parts III, V and IX; and HSWA.

14. Compliance Schedules. Reports of compliance or noncompliance with, or any progress reports on, interim and final requirements contained in any compliance schedule of this permit shall be submitted no later than 14 calendar days following each schedule date.

15. Other Information. Whenever the Permittee becomes aware that he failed to submit any relevant facts in the permit application, or submitted incorrect information in a permit application or in any report to the Director, the Permittee shall verbally notify the Director of such fact on the next work day and submit, within thirty calendar days, written correction of such facts or information. The term "Permit Application" includes any information submitted on solid waste management units.

I.E. SIGNATORY REQUIREMENTS

All reports or other information requested by the Director shall be signed and certified as required by HWMR-5, as amended 1989, Part IX, 40 CFR section 270.11.

I.F. CONFIDENTIAL INFORMATION

The Permittee may claim confidential, in accordance with HWMR-5, as amended 1989, Part IX, 40 CFR section 270.12 any information, required to be submitted by this permit.

I.G. DOCUMENTS TO BE MAINTAINED AT FACILITY

The Permittee shall maintain at the facility, until closure is completed and certified by an independent registered professional engineer, the following documents and amendments, revisions and modifications to these documents:

1. This permit and its attachments;

2. Waste Analysis Plan, as required by HWMR-5, as amended 1989, Part V, 40 CFR section 264.13(b) and this permit;

3. Personnel training documents and records required by HWMR-5, as amended 1989, Part V, 40 CFR section 264.16(a) and this permit;

4. Contingency Plan, as required by HWMR-5, as amended 1989, Part V, 40 CFR section 264.53(a) and this permit;

5. Closure Plans required by HWMR-5, as amended 1989, Part V, 40 CFR section 264.112(a) and this permit;

6. Operating record required by HWMR-5, as amended 1989, Part V, 40 CFR section 264.73 and this permit; and

7. Inspection schedules required by HWMR-5, as amended 1989, Part V, 40 CFR section 264.15 and this permit.

I.H. PERMIT CONSTRUCTION

1. Citing. Whenever paragraphs of this permit or of the Hazardous Waste Management Regulations are cited, such cite includes all subordinate 40 CFR sections of the cited paragraph. When subordinate 40 CFR sections are cited, such cite includes all 40 CFR subsections of the cited subparagraph. All such cites shall be considered an inclusion by reference in accordance with HWMR-5, as amended 1989, Part IX, 40 CFR section 270.30.

2. Gender. Whenever the pronoun "he" is used in reference to the Director of the Environmental Improvement Division or the Permittee, it is to be read as "she" in any instance where the object of the reference is female.

3. Definitions. For purposes of this Permit, terms used herin shall have the same meaning as those in HWMR-5, Parts I, V, VIII, and IX, unless this permit specifically provides otherwise; where terms are not defined in the regulations or the permit, the meaning associated with such terms shall be defined by a standard dictionary reference or the generally accepted scientific or industrial meaning of the term. "Regional Administrator" means the Regional Administrator of EPA Region VI, or his designee or authorized representative. "Director" means the Director of the New Mexico Environmental Improvement Division, or this designee or authorized representative.

a. References to "Wastes" in this permit mean "Hazardous Wastes" as regulated under RCRA unless specifically designated otherwise at the time of use.

b. The term "Knowledge of Process" means a written description of the waste, certified as true and correct by an individual familiar with the process that generated the waste. Such description shall specify the waste constituents and estimate their concentration or quantity.

c. The term "On-site" as used in permit paragraph II.B.2. means facilities under the operational control of the Permittee and located within the external perimeter of the Permittee's property. This includes Technical Areas 0, 2, 3, 6, 8, 9, 11, 14, 15, 16, 18, 21, 22, 26, 33, 35, 36, 37, 39, 40, 41, 43, 46, 48, 49, 50, 51, 52, 53, 54, 55, 58, and 59. See permit Figure I-1 and Table I-1.

d. Technical Area Zero (TA-0), includes only the detached sites listed in Table I-1.

e. The term "Analysis" includes physical analysis, chemical analysis and knowledge of process determinations.

f. The term "Permittee" as used in this permit applies jointly and severably to the Owner, U. S. Department of Energy, and to the Operator, the University of California Regents, doing business as the Los Alamos National Laboratory.

MODULE II GENERAL FACILITY CONDITIONS

II.A. DESIGN AND OPERATION OF THE FACILITY

The Permittee shall maintain and operate the facility to minimize the possibility of a fire, explosion, or any unplanned sudden or non-sudden release to air, soil, or surface water of hazardous waste constituents which could threaten human health or the environment.

II.B. REQUIRED NOTICE

1. Foreign Wastes. This permit does not allow the Permittee to accept wastes from a foreign source. If the Permittee is to receive hazardous waste from a foreign source, he shall apply for and receive a permit modification in accordance with HWMR-5, as amended 1989, Part IX, 40 CFR section 270.41 or 270.42, if appropriate, prior to accepting such waste.

2. Off-Site Wastes. This permit does not allow the Permittee to accept wastes from an off-site source. "Offsite source" refers to wastes generated by sources other than the Permittee or its contractor(s) operating onsite. For the purposes of this permit, wastes generated by the Permittee at Technical Area 57, the Fenton Hill site, may be accepted for storage or treatment if all such waste is properly manifested in accordance with permit paragraph II.J. below. If the Permittee is to receive hazardous waste from an off-site source, he shall apply for and receive a permit modification in accordance with HWMR-5, as amended 1989, Part IX, 40 CFR section 270.41 or 270.42, if appropriate, prior to accepting such waste.

II.C. WASTE ANALYSIS

1. Waste Analysis Plan. The Permittee shall follow the procedures described in Permit Attachment A.

2. Quality Assurance. The Permittee shall verify its waste analysis as part of a written quality assurance program. The quality assurance program shall be in accordance with current accepted practices such as specified in Test Methods for Evaluating Solid Waste: Physical/Chemical Methods SW-846, 1986, as revised, or equivalent methods approved by the Director; and at a minimum ensure that the Permittee maintains proper functional instruments, uses approved sampling and analytical methods, verifies the validity of sampling and analytical procedures, and performs correct calculations. The Permittee will notify any contract laboratory of the requirements of this section and permit.

3. Waste Segregation. The Permittee shall keep available at each place where waste storage for more than ninety days occurs, a copy of EPA-600/2-80-076, *A Method of Determining the Compatability of Hazardous Waste.*

4. Annual Verification. The Permittee shall annually, by the anniversary date of each quarterly report, verify the accuracy and currency of the waste stream determination made in Permit Attachment I.

*II.*D. SECURITY

The Permittee shall comply with the security provisions of HWMR-5, as amended 1989, Part V, 40 CFR section 264.14.

*II.*E. INSPECTION REQUIREMENTS

1. Inspection Plan. The Permittee shall follow Permit Attachment B. and the inspection requirements in Modules III through VII. The Permittee shall remedy any deterioration or malfunction of equipment or structure discovered by an inspection as required by HWMR-5, as amended 1989, Part V, 40 CFR section 264.15(c). Inspection logsheets may be revised by the Permittee and submitted to the Director for inclusion in this permit by permit modification in accordance with HWMR-5, as amended 1989, Part IX, 40 CFR section 270.42 .

2. Facility Release Inspection.

   a. The Permittee shall take surface water samples and analyze for metals, volatile and both acid- and base-neutral semivolatile organic hazardous waste constituents in accordance with Table II-2 annually at the sample locations in Table II-1. See Figure 9.

   b. The sampling and analysis shall be done using EPA-approved procedures as published in the latest issue of SW-846.

   c. Analysis of Variance (ANOVA) statistical procedures as promulgated in 53 FR 39720 (October 11, 1988) shall be used to compare data between up-gradient and down-gradient stations.

   d. Records of this inspection shall be kept in accordance with permit paragraph II.K.1.a. below. All analytical results will be recorded and reported. Reports shall be on the form provided in Figure 10.

   e. Reports of releases detected by this inspection shall be made in accordance with permit paragraph II.K.2.c. below.

   f. In the event water samples cannot be obtained at one or more sites, the attempt to obtain samples will be documented in the facility record and the Director notified in writing within 30 days of each unsuccessful attempt.

*II.*F. PERSONNEL TRAINING

The Permittee shall conduct personnel training as required by HWMR-5, as amended 1989, Part V, 40 CFR section 264.16. This training program shall follow Permit Attachment C. Permit Attachment C. shall be updated by the Permittee whenever necessary so as to remain current and accurate. A dated copy of the revised training program will be submitted to the Director for the permit files and permit modification in accordance with HWMR-5, as amended 1989, Part IX, 40 CFR section 270.42 prior to its implementation. The Permittee shall maintain

training documents and records, as required by HWMR-5, as amended 1989, Part V, 40 CFR section 264.16(d) and (e).

*II.*G. REQUIREMENTS FOR IGNITABLE, REACTIVE, OR INCOMPATIBLE WASTE

The Permittee shall comply with the requirements of HWMR-5, as amended 1989, Part V, 40 CFR section 264.17.

*II.*H. PREPAREDNESS AND PREVENTION

1. Required Equipment. At a minimum, the Permittee shall equip the facility with the equipment set forth in Permit Attachments B. and D.

2. Testing and Maintenance of Equipment. The Permittee shall test and maintain the equipment specified in permit paragraph II.H.1. above annually or more often if necessary to assure its proper operation in time of emergency.

3. Access to Communications or Alarm System. The Permittee shall maintain access to the communications or alarm system(s) as required by HWMR-5, as amended 1989, Part V, 40 CFR section 264.34.

4. Required Aisle Space. The Permittee shall maintain aisle space as required by HWMR-5, as amended 1989, Part V, 40 CFR section 264.35. The minimum aisle shall be twenty four inches. All containers in storage shall be accessible for inspection.

*II.*I. CONTINGENCY PLAN

1. Implementation of Plan. The Permittee shall immediately carry out the provisions of Permit Attachment D. whenever there is an unplanned fire, explosion, or unpermitted release of hazardous waste or hazardous constituents which threatens or could threaten human health or the environment.

2. Amendment of the Plan. The Permittee shall review, as required by HWMR-5, as amended 1989, Part V, 40 CFR section 264.54., and immediately amend if necessary, the Contingency Plan.

3. Copies of the Plan. The Permittee shall comply with the requirements of HWMR-5, as amended 1989, Part V, 40 CFR section 264.53. A dated copy of any amended Contingency Plan will be submitted to the Director for the permit files and permit modification in accordance with HWMR-5, as amended 1989, Part IX, 40 CFR section 270.42 prior to its implementation.

4. Emergency Coordinator. The Permittee shall comply with the requirements of HWMR-5, as amended 1989, Part V, 40 CFR section 264.55 concerning the emergency coordinator.

*II.*J. MANIFEST SYSTEM

The Permittee shall comply with the manifest requirements of HWMR-5, as amended 1989, Part V, 40 CFR sections 264.71 and 264.72 for any hazardous

wastes received from or shipped off-site by the Permittee for treatment, storage or disposal.

II.K. RECORDKEEPING AND REPORTING

1. Facility Operating Record. The Facility Operating Record maintained pursuant to HWMR-5, as amended 1989, Part V, 40 CFR section 264.73 shall be maintained in such manner that any information required to be in the record shall be readily available to an inspector. Readily available means that, upon request by an inspector, the Permittee can provide the requested information within 24 hours or before the end of the inspection, whichever is less; or upon a schedule designated by the inspector.

   a. In accordance with HWMR-5, as amended 1989, Part IX, 40 CFR section 270.30(j), the Permittee shall maintain at the facility until the end of the last closure period, a written record of waste, effluent, water and decontamination wash-water analyses. The following information shall be recorded:

      (i) The dates, exact place, and times of sampling or measurements;

      (ii) The individual who performed the sampling or measurements;

      (iii) The dates analyses were performed;

      (iv) The individuals or off-site laboratory who performed the analyses;

      (v) The analytical techniques or methods used; and

      (vi) The results of such analyses. The results shall include range, mean, standard deviation and detection limits as applicable to facilitate data analysis.

   b. The Permittee shall maintain pursuant to HWMR-5, as amended 1989, Part V, 40 CFR section 264.73(b) at the facility until the end of the last closure period, a written record of waste disposal activities. Current EPA approved nomenclature and codes shall be used where appropriate. The following information shall be recorded:

      (i) Waste Source

      (ii) Waste Description

      (iii) Waste Quantity

      (iv) Current Storage Location

      (v) Disposal. Properly completed hazardous waste manifests will suffice for wastes shipped off-site.

   c. The Permittee shall maintain at the facility a written record of Contingency Plan implementation reports. The record shall contain at least the information required in permit paragraph II K.2.b. below. These records shall be kept until the end of the last closure period.

d. The Permittee shall keep at the facility a written record of all inspections conducted in accordance with Permit Attachment B. and permit paragraph II.E. above. These records shall be maintained for a minimum period of three years from the date of the inspection. Records of inspections leading to corrective action shall be retained for three years after the corrective action taken as a result of the inspection.

e. The Permittee shall keep at the facility training documents and records as required by HWMR-5, as amended 1989, Part V, 40 CFR sections 264.16(d) and 264.16(e), and Permit Attachment C. Records of training shall be kept on all current employees and for three years after an employee leaves the facility owner's or operator's employ.

f. The Permittee shall maintain at the facility a copy of all biennial reports submitted in accordance with permit paragraph II.K.2. below. These copies shall be kept until the end of the last closure period.

g. The Permittee shall keep sufficient monitoring records and documentation to demonstrate compliance with this permit. Records unique to one activity may be kept in the vicinity of that activity, subject to the availability requirement in permit paragraph II.K.1. above.

h. In accordance with HWMR-5, as amended 1989, part V, 40 CFR section 264.74(b), the retention period for all records required by this permit is extended automatically during the course of any unresolved enforcement action regarding the facility, or as directed by the Director.

2. Reports.

a. The Permittee shall comply with the Biennial Report requirements of HWMR-5, as amended 1989, Part V, 40 CFR section 264.75.

b. In accordance with HWMR-5, as amended 1989, Part IX, 40 CFR section 270.30(l)(6), the Permittee shall report to the Director any noncompliance with the permit which may endanger human health or the environment. Any such information shall be reported orally within 24 hours from the time the Permittee becomes aware of the circumstances. This report shall include the following:

(i). Information concerning the release of any hazardous waste which may endanger public or private drinking water supplies.

(ii) Information concerning the release or discharge of any hazardous waste, or of a fire or explosion at the facility, which could threaten the environment or human health. The description of the occurrence and its cause shall include:

(a) Name, address, and telephone number of the owner or operator;

(b) Name, address, and telephone number of the facility;

(c) Date, time, and type of incident;

(d) Name and quantity of materials involved;

(e) The extent of injuries, if any;

(f) An assessment of actual or potential hazard to the environment and human health outside the facility, where this is applicable; and

(g) Estimated quantity and disposition of recovered material that resulted from the incident.

The 24-hour report shall be made by calling (505) 827-2929 during normal duty hours or (505) 827-9329, the 24-hour emergency line.

c. The Permittee shall provide to the Director within five (5) working days of the time the Permittee becomes aware of the circumstances, a written report on the event(s) reported orally in permit paragraph II.K.2.b. above. The written submission shall contain a description of the noncompliance and its cause; the periods of noncompliance, including exact dates and times; whether the noncompliance has been corrected; and if not, the anticipated time it is expected to continue; and steps taken or planned to reduce, eliminate, and prevent recurrence of the noncompliance. The Permittee need not comply with the five-day written notice requirement if the Director waives the requirement and the Permittee submits a written report within fifteen (15) calendar days of the time the Permittee becomes aware of the circumstances. The written report shall be submitted by certified mail to:

EID Director
1190 St. Francis Drive
Harold Runnels Building
Santa Fe, NM 87503

d. In accordance with HWMR-5, as amended 1989, Part IX, 40 CFR section 270.30(l)(10), the Permittee shall report all other instances of noncompliance, not otherwise required to be reported above, in the annual Environmental Surveillance Report. The reports shall contain the information listed in permit paragraph II.K.2.b. above.

II.L. CLOSURE

The provisions of this permit section apply to individual units for partial closure of the facility, as well as total closure of the entire facility. Closure of one unit may or may not affect the remaining units. The impact of such sequential or partial closure may depend on the sequence and circumstances in existence at the time of closure. The Director may direct or the Permittee may request appropriate revisions to the closure plan at that time.

1. Performance Standard. The Permittee shall close the facility as required by HWMR-5, as amended 1989, Part V, 40 CFR section 264.111 and in accordance with each closure plan, Permit Attachment E.

2. Amendment of Closure Plans. The Permittee shall amend each closure plan in accordance with HWMR-5, as amended 1989, Part V, 40 CFR section 264.112(c) whenever necessary.

3. Notification of Closure. The Permittee shall notify the Director at least 60 days prior to the date he expects to begin closure under any Permit Attachment E. closure plan.

4. Time Allowed For Closure. After receiving the final volume of hazardous waste, the Permittee shall treat or remove from site all hazardous waste in accordance with the schedule specified in the closure plan . After receiving the final volume of hazardous waste, the Permittee shall complete closure activities in accordance with the schedule specified in the closure plan.

5. Disposal or Decontamination of Equipment. The Permittee shall properly dispose of or decontaminate all facility equipment, structures, and soils, as required by the closure plan.

6. Certification of Closure. The Permitee shall certify that the facility has been closed in accordance with the specifications in the closure plan.

II.M. MOVEMENT RESTRICTION

Hazardous wastes in quantities per vehicle in excess of 110 gallons shall not be transported by the Permittee to, from, or within the facility over public roads between the hours of 7:00 AM to 8:30 AM, 11:30 AM to 1:30 PM or 4:00 PM to 5:45 PM on normal duty days. Off-site transportation under U. S. Department of Transportation regulations by EPA-registered transporters is not subject to this restriction. On-site transportation of wastes generated as a result of an emergency cleanup in accordance with Permit Attachment D are not subject to this restriction.

II.N. SPILLS

The Permittee shall take corrective action, as required by Section 74-4-4.2B NMSA 1978, (as amended 1989), for all releases of hazardous wastes or constituents from any solid waste management unit at his facility. Corrective action may include, but shall not be limited to, the following: decontamination and / or removal of all releases, spills and leaks; immmediate cleanup of release or spillage of hazardous wastes, or constituent residue or listed chemicals which become wastes; prevention of surface-water or ground-water contamination which could result from a release or spill; and, cleanup of any surface-water or ground-water contamination which results from a release or spill.

III.A. DESIGNATED STORAGE UNITS

1. Technical Area 54, Area L. The Permittee may store for more than ninety days hazardous wastes in containers only in the following designated storage areas:

   a. Containers containing free liquids may be stored on the concrete containment structure, Facility Number 54-32.

   b. Containers containing free liquids may be stored in the packaging building, Facility Number 54-31.

   c. Containers not containing free liquids may be stored, on pallets or otherwise elevated four inches, in a single layer in cleared areas within the fenced portion of Area L, subject to the limitations of HWMR-5, as amended 1989, Part V, 40 CFR sections 264.175(c) and 264.175(d). Such containers shall not be stored within five feet of the perimeter fence, nor five feet of any structure, nor five feet of the paved or unpaved roadway. Disposal unit covers designed to serve as storage areas are not subject to this exclusion. See Figure 6.

   d. Gas cylinders will be stored in cylinder racks in cleared areas within the fenced portion of Area L or fastened to the perimeter fence, within the restrictions of permit paragraph II.G. above, so that the fence acts as the cylinder support and restraint.

   e. The fenceline around Area L as shown in permit Figure 6 shall not be altered without prior notice to the Director and permit modification in accordance with HWMR-5, as amended 1989, Part IX, 40 CFR section 270.41 or 270.42 as appropriate.

   f. Containers containing free liquids may be stored in the modular storage buildings, Model 22, Facility Numbers 54-68 and 54-69, located as shown in Figure 6.

2. Technical Area 50. The Permittee may store for more than ninety days hazardous wastes in containers only in the following designated storage areas:

   a. Containers may be stored within the curbed bay of the Batch Waste Treatment Unit in Building 50-1.

   b. Containers containing free liquids may be stored on the concrete containment structures, Facility Numbers 50-139 and 50-140, located as shown in Figure 4.

   c. Building 50-37. Containers may be stored within storage room 117 of the Controlled Air Incinerator as shown in Figure 4.

d. Containers containing free liquids may be stored in the modular storage buildings, Model 22, Facility Numbers 50-114, 50-137 and 50-138, located as shown in Figure III-2.

*III.*B. AUTHORIZED WASTES

1. Identification. Only hazardous wastes identified in Permit Attachment G. with the process code "S01" in column D.1. "Processes" shall be stored.

2. Quantities. The cumulative quantity of individual hazardous wastes in storage at any one time at the facility shall not exceed the quantity indicated in Permit Attachment G. Column B. "Estimated Annual Quantity of Waste".

3. Land Ban. The Permittee must also comply with the following regarding storage of its wastes in containers which are prohibited from land disposal. These restrictions are imposed on any waste as it becomes prohibited from land disposal. (HWMR-5, as amended 1989, Part VIII, 40 CFR section 268.50)

   a. A storage period of one year is permitted. A storage period beyond one year is permitted provided there is proof that such storage is solely for the purpose of accumulation of such quantities as are necessary to facilitate proper recovery, treatment or disposal.

   b. Each container must be clearly marked as to its contents and the date each period of accumlation begins.

   c. Hazardous wastes meeting the treatment standards in HWMR-5, Part VIII, 40 CFR sections 268.41, 268.42, 268.43 are not subject to the storage prohibitation. Hazardous wastes meeting the treatment standards specified under the variance in HWMR-5, Part VIII, 40 CFR section 268.44 are not subject to the storage prohibitation.

*III.*C. CONTAINERS

1. Capacity.

   a. Labpacked wastes shall be stored in containers not to exceed 55-gallon nominal capacity.

   b. Bulk liquids may be stored in drums of a nominal capacity of 55-gallons or less.

   c. Solidified hazardous wastes not containing free liquids may be stored in containers meeting U.S. Department of Transportation (DOT) requirements for transportation.

   d. Compressed gases may be stored in any sized cylinder. Small cylinders may be packed in drums or crates complying with DOT shipping regulations.

   e. Polyethylene containers of 220-gallon or 330-gallon capacity may be used in place of 55-gallon drums as long as secondary containment capacity criteria of HWMR-5, as amended 1989, Part V, 40 CFR section 264.175(b)(3) are not exceeded.

2. Type. Containers must be of a type specified in the DOT hazardous materials regulations, 49 CFR 171 to 179, if those regulations specify a particular container for the waste. As applicable, the containers shall be either: (1) previously unused or certified reconditioned DOT shipping containers; (2) the original shipping containers in which the material was first marketed; or (3) any other suitable container which satisfies the requirements of permit paragraph III. C. If the hazardous wastes are to be received and stored in their original shipping containers, the Permittee must insure that the requirements of permit paragraph III.C. are satisfied. Polyethylene bulk containers shall meet or exceed DOT specification number E9052. Compressed gas cylinders not meeting DOT requirements shall be segregated in a safe area.

3. Quantity. The following quantities include all stored liquid materials, whether regulated or not. Solid materials which do not displace containment capacity may be collocated without affecting these volumes. Solid materials which displace containment volume shall be included in calculating the stored volume as if they were liquids. The Permittee shall keep current accurate records of the quantity of waste in storage at each location below to ensure that these capacities are not exceeded.

   a. No more than 220 gallons of liquid shall be stored at Technical Area 50, Building 50-1, BWTU curbed bay.

   b. No more than 440 gallons of liquid shall be stored at Technical Area 54, Area L, Building Number 54-31.

   c. No more than seventeen 2,220 gallons of liquid shall be stored at each concrete containment structure: Facility Numbers 54-32, 50-139 or 50-140.

   d. No more than 3600 containers of 55-gallon capacity or less, or the equivalent volume of 26,470 cubic feet, 980 cubic yards or 749 cubic meters, shall be used to store solidified wastes at Technical Area 54, Area L.

   e. No more than 3,630 gallons of liquid shall be stored in Building 50-37, Room 117.

   f. No more than 1,650 fifty gallons of waste shall be stored in each modular storage unit.

4. Condition.

   a. If a container holding hazardous waste is not in good condition (e.g. severe rusting, structural defects) or if it begins to leak, the Permittee shall transfer the hazardous waste from such container to a container that is in good condition or otherwise manage the waste in compliance with the conditions of this permit.

   b. The Permittee may use overpack containers of more than 55-gallon capacity to manage defective waste storage containers. Each overpacked container shall be recorded in the facility record.

5. Compatibility of Waste with Containers.

   a. The Permittee shall assure, as required by HWMR-5, as amended 1989, Part V, 40 CFR section 264.172, that the ability of the container to contain the waste is not impaired. When necessary, this shall include procedures for determining whether the hazardous waste is no longer compatible with the shipping container if it is to be stored in its original container (*e.g.* determination of container adequacy for chemicals that have a finite shelf life or may change in composition upon aging).

   b. The Permittee shall not place into the polyethylene containers described in permit paragraph III.C.1.e. above, any material for which the manufacturer does not rate the container suitability as "Good" or "Excellent" in the current compatibility technical bulletin issued by the manufacturer. A copy of the current bulletin shall be available at any location where the polyethelene container(s) is (are) filled or stored with contained wastes for more than thirty days.

6. Management. The Permittee shall manage containers as required by HWMR-5, as amended 1989, Part V, 40 CFR section 264.173 and Permit Attachment F.

*III.*D. CONTAINMENT

The Permittee shall construct and maintain the containment systems for each storage unit in permit paragraphs III.A.1. and III.A.2. above in accordance with the requirements of HWMR-5, as amended 1989, Part V, 40 CFR section 264.175.

*III.*E. IGNITABLE OR REACTIVE WASTES

The Permittee shall not locate containers holding ignitable or reactive waste within 15 meters (50 feet) of the facility property line.

*III.*F. INCOMPATIBLE WASTES

The Permittee shall manage incompatible wastes or incompatible wastes and materials in accordance with the requirements of HWMR-5, as amended 1989, Part V, 40 CFR section 264.177.

*III.*G. CLOSURE

The Permittee shall comply with the Closure Plan, Permit Attachment E. and permit paragraph II.L. above, for closure of any permitted storage area.

*III.*H. INSPECTION

1. Inspection Plan. The Permittee shall inspect the storage areas in accordance with Permit Attachment B.

2. Spill Kits. The type, presence, location and quantity of spill kits shall be verified and annotated monthly. If spill kits are locked up, the location of access keys shall be verified.

3. Warning Signs. The legibility and condition of warning signs shall be included in the weekly inspection. Missing or illegible signs shall be promptly replaced within 24 hours of discovery.

   a. Signs shall be at the entrances to the hazardous waste units. Collocated units may be included within one signed area.

   b. Signs shall say "Danger, Unauthorized Personnel Keep Out" and "Hazardous Waste Storage Area".

   c. Signs shall be in both English and Spanish.

   d. Signs on approachable perimeter fences shall be spaced no more than 50 feet apart.

MODULE IV TREATMENT IN TANKS

IV.A. DESIGNATED TREATMENT UNITS

The Permittee may treat hazardous wastes only in the tanks described in this module. No other treatment of hazardous wastes, EPA code T01, is permitted anywhere on the facility. Treatment of wastes subject to the exclusions of HWMR-5, as amended 1989, Part V, 40 CFR section 264.1(g) shall be documented in accordance with Permit Attachment I. A record or listing of all facility treatment units shall be kept by the Permittee. Their regulatory status and the reasons for claiming an exclusion under HWMR-5, as amended 1989, Part V, 40 CFR section 264.1(g) shall be recorded. Laboratory staff neutralizing characteristic wastes in quantities of less than one liter need not be recorded if the resultant discharge is to a wastewater system subject to other regulation.

1. Batch Waste Treatment Unit. Wastes may be treated in the Batch Waste Treatment Unit (BWTU) located in the basement of Building 50-1 in Technical Area 50.

2. Technical Area 54, Area L. Wastes may be treated in the four open-top steel tanks located in Area L.

IV.B. AUTHORIZED WASTES

1. Identification. Only wastes identified in Permit Attachment G. with the process code "T01" in Column D.1. "Processes" shall be treated, subject to the limitations in permit paragraph IV.B.4. below.

2. Quantities. The quantity of waste awaiting treatment shall not exceed the quantity indicated in Permit Attachment G. Column B. "Estimated Annual Quantity of Waste".

3. Additions to the List of Treated Wastes. The Permittee shall apply for a permit modification in accordance with HWMR-5, as amended 1989, Part IX, 40 CFR sections 270.41 or 270.42 before treating wastes not identified in this permit module.

4. Special Limitation. The limitations in Permit Attachment G, Column D.2. shall apply to choice of treatment unit.

5. Land Ban. The Permittee must also comply with the following regarding storage of its wastes in tanks which are prohibited from land disposal. These restrictions are imposed on any waste as it becomes prohibited from land disposal. (HWMR-5, as amended 1989, Part VIII, 40 CFR section 268.50)

   a. A storage period of one year is permitted. A storage period beyond one year is permitted provided there is proof that such storage is solely for the purpose of accumulation of such quantites as are necessary to facilitate proper recovery, treatment or disposal.

   b. Each container must be clearly marked as to its contents and the date each period of accumulation begins.

c. Hazardous wastes meeting the treatment standards in HWMR-5, as amended 1989, Part VIII, 40 CFR sections 268.41 268.42, 268.43 are not subject to the storage prohibition. Hazardous wastes meeting the treatment standards specified under the variance in HWMR-5, Part VIII, 40 CFR section 268.44 are not subject tothe storage prohibitation.

IV.C. DESIGN OF TANKS

1. Batch Waste Treatment Unit. The tank shall be a totally enclosed vented 500 gallon Kynar (c) lined pressure vessel. The tank shall be over a curbed containment slab with eight inch curbs and constructed crack-free of concrete with epoxy coating.

2. Technical Area 54, Area L Treatment Tanks. The tanks shall be nine feet in diameter and three feet six inches high. They shall be constructed of ten gauge carbon steel and shall be coated inside and out with Carboline Phenoline (@) film or equivalent. The tanks shall be on a containment slab constructed with six inch retaining curbs as in Figure 7.

IV.D. OPERATING REQUIREMENTS

1. Batch Waste Treatment Unit. The Batch Waste Treatment Unit shall be operated in accordance with Permit Attachment H and the requirements of this module.

   a. The process monitoring instrumentation will be checked for proper operation before treatment begins. No treatment will be started if monitoring instruments are not functioning properly.

   b. Wastes will be sampled before and after treatment and analyzed in accordance with Permit Attachment A.

   c. No more than 400 gallons of waste plus reagents shall be treated at one time. The wastes shall be limited to the appropriate quantity based on the results of the analyses and the estimated quantity of reagent required to treat the waste.

   d. Residues from treatment of wastes listed in HWMR-5, as amended 1989, Part II, 40 CFR section 261, Subpart D, shall be properly disposed of as a hazardous waste in accordance with applicable regulations. Waste treatment residues determined in accordance with Permit Attachment A to qualify for exclusion may be discharged to the industrial wastewater system.

   e. The process tank and associated plumbing will be cleaned before and after treatment operations. Operations consisting of several treatment batches of compatible wastes do not require cleaning between batches. The tank and plumbing will be cleaned at the end of the operation, or if the treatment unit is to be left unmanned, such as the end of a shift with no following manned shift.

2. Technical Area 54, Area L.

a. The tanks shall maintain a minimum of six inches of freeboard at all times. The tanks shall not be left unattended when filling or addition of any material is in process.

b. Wastes in the tanks will be sampled before and after treatment and analyzed in accordance with Permit Attachment A.

c. Tanks containing hazardous wastes will be covered whenever significant precipitation is imminent or falling. Significant precipitation is one-half inch water equivalent.

d. Incompatible wastes shall not be treated in the tanks.

IV.E. INSPECTIONS

The Permittee shall inspect the treatment tanks in accordance with Permit Attachment B. and the requirements below.

1. Batch Waste Treatment Unit.

   a. All gauges and instruments associated with the BWTU shall be inspected monthly for calibration dates. No instrument or gauge shall be used if it has not been calibrated in accordance with its manufacturer's recommendations.

   b. The type, presence, location and quantity of spill kits shall be verified and annotated monthly. If spill kits are locked up, the location of access keys shall also be verified.

   c. Appropriate safety verifications shall be made prior to personnel entry into the tank for inspection.

   d. In accordance with HWMR-5, as amended 1989, Part V, 40 CFR section 264.193(c)(4), accumulated liquids discovered in secondary containment structures shall be removed within 24 hours of discovery.

   e. Cracks and/or gaps in secondary containment structures discovered during an inspection will be repaired within seven calendar days of discovery. Cracks determined to be minor and not adversely affecting containment integrity shall be logged and delay of repairs justified. Repair of minor cracks may be deferred until regularly scheduled maintenance.

2. Technical Area 54, Area L.

   a. The type, presence, location and quantity of spill kits shall be verified and annotated monthly. If spill kits are locked up, the location of access keys shall also be verified.

   b. In accordance with HWMR-5, as amended 1989, Part V, 40 CFR section 264.193(c)(4), accumulated liquids discovered in secondary containment structures shall be removed within 24 hours of discovery. In the event inclement weather prevents such removal, the circumstances shall be documented in the facility record and the removal effected not later than the next duty day after the weather allows.

c. Cracks and/or gaps in secondary containment structures discovered during an inspection will be repaired within seven calendar days of discovery. Cracks determined to be minor and not adversely affecting containment integrity, shall be logged and delay of repairs justified. Repair of minor cracks may be deferred until regularly scheduled maintenance.

3. Warning Signs. The legibility and condition of warning signs shall be included in the weekly inspection. Missing or illegible signs shall be promptly replaced within 24 hours of discovery.

   a. Signs shall be at all entrances to the hazardous waste units. Collocated units may be included within one signed area.

   b. Signs on approachable perimeter fences shall be spaced no more than 50 feet apart.

   c. Signs shall say "Danger, Unauthorized Personnel Keep Out" and "Hazardous Waste Storage Area".

   d. Signs shall be in English and Spanish.

IV.F. RESPONSE TO LEAKS OR SPILLS

The Permittee shall follow the requirements of HWMR-5, as amended 1989, Part V, 40 CFR section 264.196 in response to a leak or spill.

IV.G. CERTIFICATION OF REPAIRS

All major repairs to any tank or associated plumbing shall be certified in accordance with HWMR-5, as amended 1989, Part V, 40 CFR section 264.196(f) prior to being placed back in service.

IV.H. CLOSURE

The Permittee shall close the tanks in accordance with Permit Attachment E, permit paragraph II. L. above and this permit module.

1. Batch Waste Treatment Unit.

   a. At closure, all hazardous waste residues shall be removed from the tank, associated plumbing and the containment structure in accordance with HWMR-5, as amended 1989, Part V, 40 CFR section 264.197(a).

   b. Any component not decontaminated shall be disposed of as hazardous waste in accordance with HWMR-5, as amended 1989, Part V, 40 CFR section 264.197(b).

2. Technical Area 54, Area L.

   a. At closure, all hazardous waste residues shall be removed from the tanks and the containment structure in accordance with HWMR-5, as amended 1989, Part V, 40 CFR section 264.197(a).

b. Any component not decontaminated shall be disposed of as hazardous waste in accordance with HWMR-5, as amended 1989, Part V, 40 CFR section 264.197(b).

MODULE V CONTROLLED AIR INCINERATOR OPERATION

V.A. GENERAL CONDITIONS

1. Authorized Unit. The unit is the modified Environmental Control Products model ECP 500-T Controlled Air Incinerator (CAI) located in Technical Area 50, Building 37 and configured as shown in Figure 8.

2. Destruction and Removal Efficiency. The incinerator and associated effluent control system shall be operated to achieve a minimum destruction and removal efficiency (DRE) of 99.99% calculated in accordance with HWMR-5, as amended 1989, Part V, 40 CFR section 264.343(a). A minimum DRE of 99.9999% shall be achieved whenever waste F027 is incinerated.

3. Regulatory Compliance. In accordance with HWMR-5, as amended 1989, Part V, 40 CFR section 264.343(d), compliance with the operating conditions of this permit will be regarded as compliance with HWMR-5, as amended 1989, Part V, 40 CFR section 264.343. Evidence that compliance with these conditions is insufficient to ensure compliance with the performance standards of HWMR-5, as amended 1989, Part V, 40 CFR section 264.343, shall be information justifying permit modification in accordance with HWMR-5, as amended 1989, Part IX, 40 CFR section 270.41 or 270.42 or permit revocation in accordance with HWMR-5, as amended 1989, Part IX, 40 CFR section 270.43.

V.B. WASTE IDENTIFICATION

1. Authorized Wastes.

   a. Only wastes identified in Permit Attachment G. with the process code "T03" in column D.1. "Processes" shall be incinerated at the CAI.

   b. Only wastes generated at the Permittee's facility shall be incinerated. See permit paragraph II.B.2. above.

2. Prohibited Wastes.

   a. The following listed hazardous wastes shall not be incinerated unless chemical analysis shows them to not exceed one hundred micrograms per gram concentration in the waste:

      (i) U121 Trichloromonofluoromethane (Freon 11)

      (ii) U225 Tribromomethane

      (iii) U075 Dichlorodifluoromethane (Freon 12)

   b. Any future listed hazardous waste with a heat of combustion less than 0.24 kilocalories per gram shall not be incinerated unless chemical analysis shows it to not exceed one hundred micrograms per gram concentration in the waste.

c. Wastes generated off-site shall not be incinerated. See permit paragraph II.B.2.above.

3. Physical Form. Wastes in gaseous, liquid, solid, or semi-solid sludge forms may be incinerated.

V.C. WASTE ANALYSIS

1. Waste Analysis Plan. The Permittee shall follow Permit Attachment A. Each knowledge of process determination shall be documented and justified. Each batch of waste shall be analyzed in accordance with Permit Attachment A.4.1.2.

2. Analysis of Waste Blends. Waste blends of previously analyzed materials shall not require reanalysis unless:

   a. Physical properties are expected to vary more than five percent (5%) from those of the original feedstock, and

   b. Those physical properties cannot be calculated based on previous analytical knowledge of the individual components or blends forming the new mixture.

   c. Five percent (5%) of the waste blends not analyzed on an annual basis shall be subject to analysis as a quality control check of the calculated values. Aggreement between analytical data and calculated values of ten percent (10%), based on the analytical data, shall be acceptable. Disagreement shall be investigated for cause and documented in the record, along with appropriate corrective actions. The next waste blend created after a disagreement shall be analyzed to confirm corrective action.

   d. Waste blends may not be incinerated prior to receipt of analytical data.

3. Determination of Radionuclides Content. Each batch of waste treated under this permit shall be surveyed to determine its radionuclide content. Knowledge of Process shall not be used for this survey.

4. Metals Standards. Each batch of liquid waste treated under this permit shall be analyzed to determine its metal content. For each metal, the waste feed rate, in grams/sec, should not exceed that dictated by the emissions screening limits for noncarcinogenic and carcinogenic metals for facilities in complex terrain determined by using the terrain adjusted effective stack height according to the EPA "Guidance on Metals and Hydrogen Chloride Controls for Hazardous Waste Incinerators, Vol. IV, March, 1989," or the succeeding guidance documents. Knowledge of Process analyses may be used on no more than 80% by volume of the wastes treated.

V.D. PRINCIPAL ORGANIC HAZARDOUS CONSTITUENTS

1. Routine Operations. For all hazardous waste burns the following constituents are designated as POHCs unless chemical or physical analysis shows they comprise less than 100 micrograms per gram of the waste:

a. U044 Chloroform

b. U228 Trichloroethylene

c. U226 1,1,1-trichloroethane

d. U211 Tetrachloromethane

2. Bulk-Feed Operations. Whenever the hazardous waste feed contains ten percent by weight or more of any listed hazardous waste, each such constituent is designated a POHC.

V.E. MONITORING

For each hazardous waste burn, the continuous monitoring and/or recording devices below shall be observed hourly by an operator during waste feed operation and the observation recorded in the operating record. For purposes of this requirement, permanent charts which are made a part of the record may be initialed to document such observation. A log identifying the full name associated with the initials shall be included with the record.

1. Flue gas scrubber solution pH, "Process Sump pH Out";

2. Primary Combustion Chamber Temperature, "Lower Chamber Temperature";

3. Secondary Combustion Chamber Temperature, "Upper Chamber Temperature";

4. Waste Feed Rate;

5. Flue gas carbon monoxide content;

6. Secondary combustion chamber oxygen content, "Upper Chamber Oxygen";

7. Combustion air flow rate, "Final Flow Totalizer";

8. Scrubber water recycle flow rate, "Absorber Liquid Flow" and "Quench Liquid Flow".

9. Total hydrocarbon reading from the exhaust stack.

10. Radioactivity from the exhaust stack.

V.F. OPERATION

During hazardous waste feed operations the following operational limits shall be observed:

1. Total Chloride Content. The aggregate chlorine content of the waste plus fuel shall not exceed 99.4 pounds per hour input to the CAI. Each batch of waste shall meet this standard.

2. Waste Feed Rates.

a. Liquid hazardous wastes shall be introduced at a rate not to exceed 1.5 million Btu per hour total thermal input. Total thermal input shall include contributions from auxiliary fuel, hazardous and nonhazardous wastes.

b. Solid hazardous wastes shall be introduced at a rate not to exceed 1.5 million Btu per hour total thermal input. Total thermal input shall include contributions from auxiliary fuel, hazardous and nonhazardous wastes. Of this feed rate, solid hazardous waste mixtures shall not exceed 125 pounds per hour.

3. Venturi Scrubber. The pressure drop across the venturi scrubber shall be a minimum of forty inches W.C.

4. High Efficiency Particulate Air Filters. The pressure drop across both on-line incinerator exhaust gas HEPA filter banks shall be a minimum of one-tenth inch W.C. or alternative equivalent manufacturer's performance specification.

5. Operating Temperatures.

a. The incinerator shall be brought to operating temperature in both the primary and secondary combustion chambers before hazardous wastes are introduced.

b. Primary chamber operating temperature shall be a minimum of 1400 degrees Fahrenheit, measured at the hot duct between the primary and secondary chambers.

c. Secondary chamber operating temperature shall be a minimum of 2000 degrees Fahrenheit, measured at the chamber exit to the high temperature duct.

d. Temperatures shall be maintained above these minimums as long as hazardous wastes remain in the incinerator, except that during an emergency shutdown these temperatures need not be maintained after waste feed is terminated.

6. Effluent Control System Solution.

a. The effluent control system (ECS) scrubber solution shall be recycled to the packed column absorber at a minimum flow rate of 10 gallons per minute.

b. The ECS scrubber solution shall be controlled with either sodium hydroxide or potassium hydroxide to a pH range above 1.0 $\pm$ 3%.

7. Combustion Air.

a. Exhaust gas flow shall not exceed :

(i) 3654 pounds per hour during solid or semisolid waste incineration, or

(ii) 3933 pounds per hour during liquid waste incineration.

b. Carbon monoxide concentration, as measured by the continuous recording carbon monoxide analyzer, shall not exceed 100 parts per million by volume, except that for a period not to exceed five minutes, the system may continue to burn waste if the carbon monoxide concentration does not exceed 500 parts per million.

c. Oxygen concentration in the secondary combustion chamber shall be a minimum of seven and one-half percent (7.5%) for solids and six percent (6%) for liquids. Measurement accuracy shall be $\pm$ 3%.

8. Total Hydrocarbon.

a. Total hydrocarbon reading in the exhaust gas shall not exceed 20 parts per million corrected to dry stack gas for more than one hour rolling average where the stack gas is sampled at least 4 times per minute.

b. Total hydrocarbon reading in the exhaust gas shall not exceed 100 parts per million for more than one minute.

c. Total hydrocarbon reading in the exhaust gas shall not exceed 500 parts per million for any reading

9. Radioactivity.

a. The exhaust gas radioactivity measured during operation under this permit shall not exceed the background by ten percent (10%) for more than one minute.

b. The exhaust gas radioactivity measured during operation under this permit shall not exceed the background by fifty percent (50%).

c. Background is defined as that level of radiation read when the incinerator is operating at the parameters required for hazardous waste treatment but no waste feed occuring measured prior to hazardous waste treatment.

10. Automatic Shutdown.

a. The Permittee shall install and properly maintain a system of monitors and automatic waste feed cutoff so that hazardous waste feed is shutdown whenever the operating conditions in permit paragraphs V.F.3. through V.F.9. above are not met.

b. Hazardous wastes shall not be reintroduced to the incinerator until the cause of any automatic shutdown is determined and appropriate corrective action is taken.

11. Waste Handling Practices.

a. Wastes to be incinerated shall be stored only at storage areas authorized in permit paragraph III.A. above.

b. Liquid and solid feed preparation operations which take place at the CAI shall be performed in accordance with the provisions of:

(1) Los Alamos National Laboratory Manual, Chapter 1, Health and Safety, Current edition. A copy shall be readily available to the operator.

(2) Permit Attachment J, "Incinerator Operational Safety". A copy shall be readily available to the operator.

(3) The operating manual for the Controlled Air Incinerator. A copy shall be readily available to the operator.

(4) The applicable Operating Instruction(s), Safe Operating Procedures, and/or Special Work Permit(s) required for the particular operation being conducted. A copy of the applicable document(s) shall be readily available to the operator.

c. Sampling of wastes for analysis in accordance with Permit Attachment A. shall be done at the place of storage or at the incinerator waste feed tanks. Periodic quality control spot sampling may be done elsewhere in the incinerator area at the discretion of the inspector and with the approval of the incinerator supervisor.

V.G. EFFLUENT CONTROL

The incinerator effluent controls shall be operational at all times the incinerator is burning hazardous wastes.

1. Ash Control. Ash resulting from a listed waste burn shall be cemented and disposed of off site as a hazardous waste. Ash resulting from incineration of characteristic wastes or wastes listed solely due to characteristic shall be disposed of as a hazardous waste or analyzed for alternate disposition. If such analysis demonstrates the waste is no longer characteristic as defined in HWMR-5, as amended 1989, Part II, 40 CFR section 261, subpart C, it may be disposed of in accordance with other applicable regulations.

2. Effluent Control System. Effluent control system wastewater and filters shall be disposed of as a hazardous waste in accordance with applicable regulations. "Filters" as used herein applies to both the HEPA filters and the carbon absorber materials. The carbon absorber unit materials shall be replaced at intervals no longer than 2000 operating hours.

V.H. INSPECTION

The Permittee shall inspect the incinerator in accordance with Permit Attachment B. and the requirements below.

1. Spill Kits. The type, presence, location and quantity of spill kits shall be verified and annotated monthly. If spill kits are locked up, the location of access keys shall be verified.

2. Instrumentation. All gauges and instruments shall be inspected for calibration dates prior to incineration of wastes. No instrument or gauge shall be used if it has not been calibrated in accordance with its manufacturers' recommendations.

3. Warning Signs. The legibility and condition of warning signs shall be included in the quarterly inspection. Missing or illegible signs shall be promptly replaced within 24 hours of discovery.

   a. Signs shall be at the entrances to the hazardous waste units. Collocated units may be included within one signed area.

   b. Signs shall say "Danger, Unauthorized Personnel Keep Out" and "Hazardous Waste Storage Area".

   c. Signs shall be in English and Spanish.

   d. Signs on approachable fences shall be spaced no more than 50 feet apart.

4. Automatic Cutoff. The automatic cutoff system shall be tested every 2000 operating hours to demonstrate proper operation.

V.I. RECORDKEEPING

1. Waste History. The incinerator operating record shall include the source, date of receipt, description, quantity and date of incineration for each batch of hazardous waste incinerated.

2. Waste Analysis. Records of waste analysis shall be kept in accordance with permit paragraph II.K.1.a. above.

3. Inspections. Records of inspection shall be kept for three years from the date of the last action taken as a result of the inspection.

4. Automatic Waste Feed Cutoff. Whenever the automatic waste feed cutoff system required by permit paragraph V.F.8. above operates, the cause, time and remedy or repair shall be entered in the operating record. This record shall include the testing or demonstration operations required by permit paragraph V.H.4. above.

5. Effluent Analysis.

   a. Whenever sampling and analysis of the incinerator combustion exhaust or effluent control system scrubber solution are done, the sampling date, individual(s), methods and analytical results shall be entered in the operating record.

   b. The destruction and removal efficiency (DRE) shall be reverified after incinerator modifications affecting the DRE, upon accumulation of eight thousand hours of hazardous waste incineration time or five years after the effective date of this permit, whichever occurs first or if EID determines that new information requires further testing of the incinerator. Subsequent to a modification subject to this paragraph the time calculation shall be restarted.

   c. Results of calculations of the DRE associated with effluent analysis shall be entered in the operating record.

V.J. CLOSURE

The incinerator shall be closed in accordance with HWMR-5, as amended 1989, Part V, Subpart G and Part V, 40 CFR section 264.351, permit paragraphs II.L. and V.J. and Permit Attachment E.

1. Incinerator Components. The waste feed components and combustion chambers, along with interconnecting plumbing, may be steam cleaned with a detergent solution. The spent cleaning solution shall be collected and analyzed for hazardous constituents. If no hazardous constituents are detected, those components may be considered closed. If hazardous constituents are detected, the steam cleaning may be repeated until no detectable hazardous constituents are found.

2. Effluent Control System. The ECS may be drained and flushed with a detergent solution. The spent cleaning solution shall be collected and analyzed for hazardous constituents. If no hazardous constituents are detected, those components may be considered closed. If hazardous constituents are detected, the cleaning may be repeated until no detectable hazardous constituents are found.

3. Waste Storage Tanks. The waste storage tanks may be drained and washed with a detergent solution or steam cleaned. The spent cleaning solution shall be collected and analyzed for hazardous constituents. If no hazardous constituents are detected, those components may be considered closed. If hazardous constituents are detected, the cleaning may be repeated until no detectable hazardous constituents are found.

4. Closure Residues.

   a. All final cleaning solutions used for closure shall be tested for POHCs designated in permit paragraph V.D. above. Solutions showing detectible POHC(s) or hazardous waste characteristics shall be disposed of as hazardous wastes.

   b. Any component not decontaminated in accordance with permit paragraph V.J. above shall be disposed of as hazardous waste.

MODULE VI STORAGE IN TANKS

*VI.*A. DESIGNATED STORAGE UNITS

The Permittee may store for more than ninety days hazardous wastes in tanks only in Technical Area 54, Area L.

*VI.*B. AUTHORIZED WASTES

1. Identification. Only hazardous wastes identified in Permit Attachment G. with the process code "S02" in column D.1. "Processes" shall be stored.

2. Quantities. No more than 5,720 gallons of liquid waste shall be stored at any one time.

*VI.*C. TANK DESCRIPTION

1. Capacity. The tanks shall be nine feet in diameter and three feet six inches high, holding approximately 1660 gallons.

2. Type. They shall be constructed of ten-gauge carbon steel and shall be coated inside and out with Carboline Phenoline (@) film or equivalent.

3. Quantity. No more than four tanks shall be used for storage.

4. Condition. If a tank holding hazardous waste is not in good condition (e.g. severe rusting, structural defects) or if it begins to leak, the Permittee shall transfer the hazardous waste from such tank to a tank or container that is in good condition or otherwise manage the waste in compliance with the conditions of this permit.

5. Compatibility of Waste with Tanks. The Permittee shall assure, as required by HWMR-5, as amended 1989, Part V, 40 CFR section 264.199, that the ability of the tank to contain the waste is not impaired.

*VI.*D. CONTAINMENT

The Permittee shall construct and maintain the secondary containment systems for the tank storage unit in accordance with the requirements of HWMR-5, as amended 1989, Part V,40 CFR section 264.193.

*VI.*E. IGNITABLE OR REACTIVE WASTE

The Permittee shall not locate tanks holding ignitable or reactive waste within 15 meters (50 feet) of the facility property line. The provisions of HWMR-5, as amended 1989, Part V, 40 CFR section 264.198 will be followed.

VI.F. INCOMPATIBLE WASTES

The Permittee shall manage incompatible wastes or incompatible wastes and materials in accordance with the requirements of HWMR-5, as amended 1989, Part V, 40 CFR section 264.199.

VI.G. CLOSURE

The Permittee shall comply with the Closure Plan, Permit Attachment E. and permit paragraph II.L. above, for closure of permitted storage tanks.

VI.H. INSPECTION

1. Inspection Plan. The Permittee shall inspect the tank storage areas in accordance with Permit Attachment B.

2. Spill Kits. The type, presence, location and quantity of spill kits shall be verified and annotated monthly. If spill kits are locked up, the location of access keys shall be verified.

3. Accumulated Liquids. In accordance with HWMR-5, as amended 1989, Part V, 40 CFR section 264.193(c)(4), accumulated liquids discovered in secondary containment structures shall be removed within 24 hours of discovery. In the event inclement weather prevents such removal, the circumstances shall be documented in the facility record and the removal effected not later than the next duty day after the weather allows.

4. Repairs to Secondary Containment Structure. Cracks and/or gaps in secondary containment structures discovered during an inspection will be repaired within seven calendar days of discovery. Cracks determined to be minor and not adversely affecting containment integrity, shall be logged and delay of repairs justified. Repair of minor cracks may be deferred until regularly scheduled maintenance.

5. Warning Signs. The legibility and condition of warning signs shall be included in the quarterly inspection. Missing or illegible signs shall be promptly replaced within 24 hours of discovery.

   a. Signs shall be at the entrances to the hazardous waste units. Collocated units may be included within one signed area.

   b. Signs on approachable perimeter fences shall be spaced no more than 50 feet apart.

   c. Signs shall say "Danger, Unauthorized Personnel Keep Out" and "Hazardous Waste Storage Area".

   d. Signs shall be in English and Spanish.

6. Freeboard. The tanks shall maintain a minimum of six inches of freeboard at all times.

*VI.*I. RESPONSE TO LEAKS OR SPILLS

The Permittee shall follow the requirements of HWMR-5, as amended 1989, Part V, 40 CFR section 264.196 in response to a leak or spill.

*VI.*J. CERTIFICATION OF REPAIRS

All major repairs to any tank or associated plumbing shall be certified in accordance with HWMR-5, as amended 1989, Part V, 40 CFR section 264.196(f) prior to being placed back in service.

*VII.*A. GENERAL CONDITIONS

1. Authorized Unit. The unit is the Spronz Incinerator Corporation, model RL-80-P incinerator located in Technical Area 16 and listed as structure 16-1150.

2. Destruction and Removal Efficiency. Emissions from the incinerator shall meet all Federal and State air standards and regulations.

*VII.*B. WASTE IDENTIFICATION

1. Authorized wastes.

   a. Wastes listed as hazardous waste solely because they are ignitable, corrosive or both (F003).

   b. Wastes listed as hazardous waste solely because they are reactive.

   c. Wastes listed as hazardous wastes solely because they exhibit the characteristic (s) of ignitabilty, corrosivity, or both.

   d. Wastes listed as hazardous wastes solely because they exhibit the characteristic of reactivity.

2. Prohibited wastes.

   a. No hazardous wastes other than those identified in permit paragraph VII.B.1. above shall be incinerated in this unit.

   b. No off-site wastes shall be incinerated.

*VII.*C. WASTE ANALYSIS

1. Waste Analysis Plan. The Permittee shall follow Permit Attachment A. where applicable.

2. Batch analysis. Each batch to be incinerated shall be inspected by a knowledgeable individual for the presence of ignitable, corrosive or reactive wastes and the absence of prohibited wastes. A signed record of each inspection shall be retained in the facility records.

3. Initial Analysis. Each new mixture of wastes not previously analyzed shall be analyzed prior to incineration for:

   a. Heating value,

   b. Viscosity or physical form,

   c. Identification of any hazardous constituent,

d. An approximate quantification of any hazardous constituent, and

e. The absence of any HWMR-5, as amended 1989, Part II, Appendix VIII constituent in a concentration in excess of one hundred micrograms per gram of waste.

*VII.*D. WASTE STORAGE

Wastes to be incinerated shall be stored in Technical Area 16, Building 290. Building 290 shall not accumulate hazardous wastes for greater than ninety days. All the requirements of HWMR-5, as amended 1989, Part III, 40 CFR section 262.34 shall be met.

*VII.*E. RECORD KEEPING

1. Waste History. The incinerator operating record shall include the source, date of receipt, description, quantity and date of incineration for each batch of hazardous waste incinerated.

2. Waste Analysis. Where applicable, the sampling date, individual(s), method and analytical results for each batch sampled at the incinerator shall be entered in the operating record.

3. Closure. The final disposition of the closure residues shall be recorded.

*VII.*F. CLOSURE

The incinerator shall be closed in accordance with the requirements of HWMR-5, as amended 1989, Part V, 40 CFR section 264.351 and Permit Attachment E.

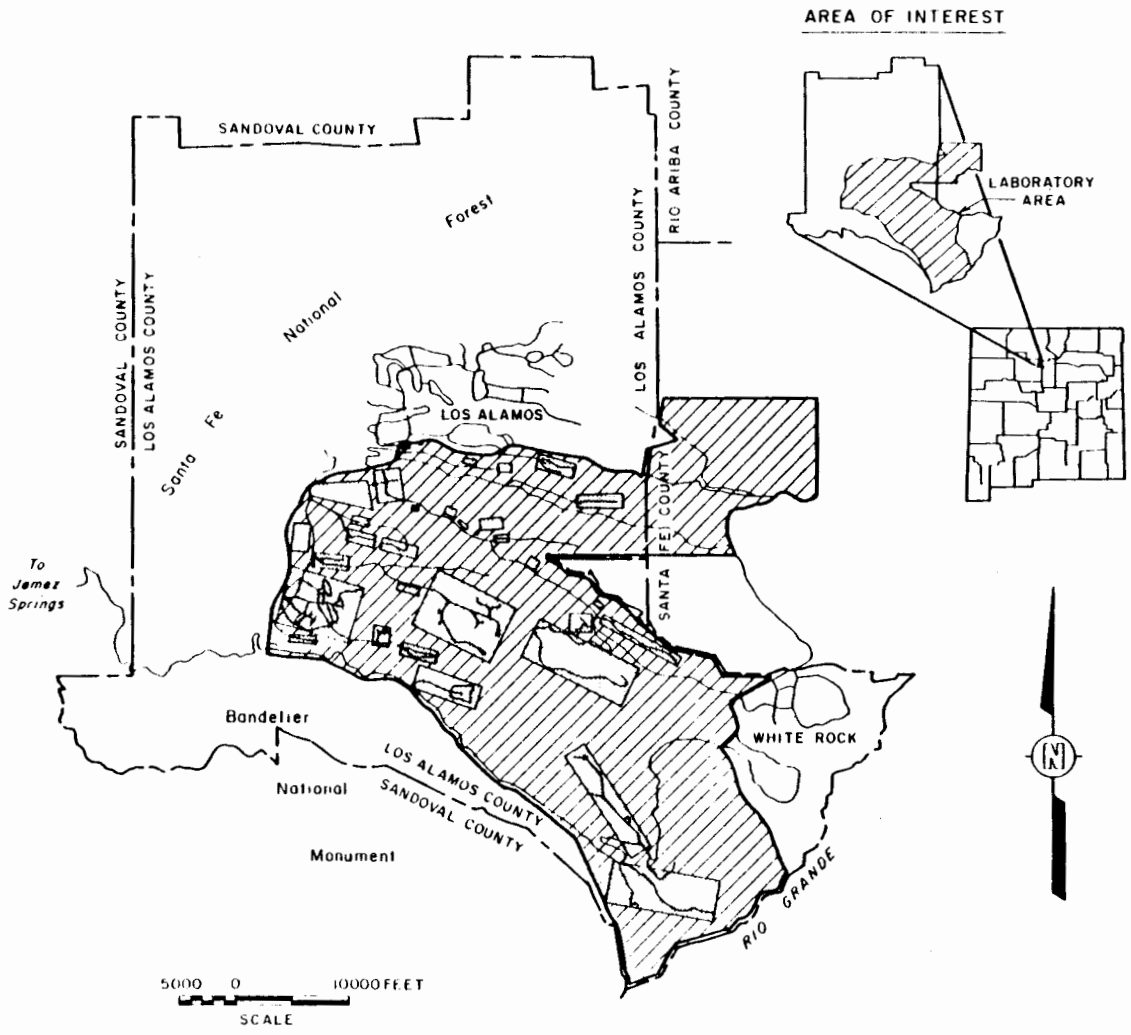

FIGURE 1

LOCATION MAP

PREPARED FOR

LOS ALAMOS NATIONAL LABORATORY

LOS ALAMOS, NEW MEXICO

IT CORPORATION

DRAWN BY	CHECKED BY	APPROVED BY	DRAWING NUMBER
N. 11/16/87			301017-02 B25

18 1253 HERCULENE A&B SMITH CO PGH PA

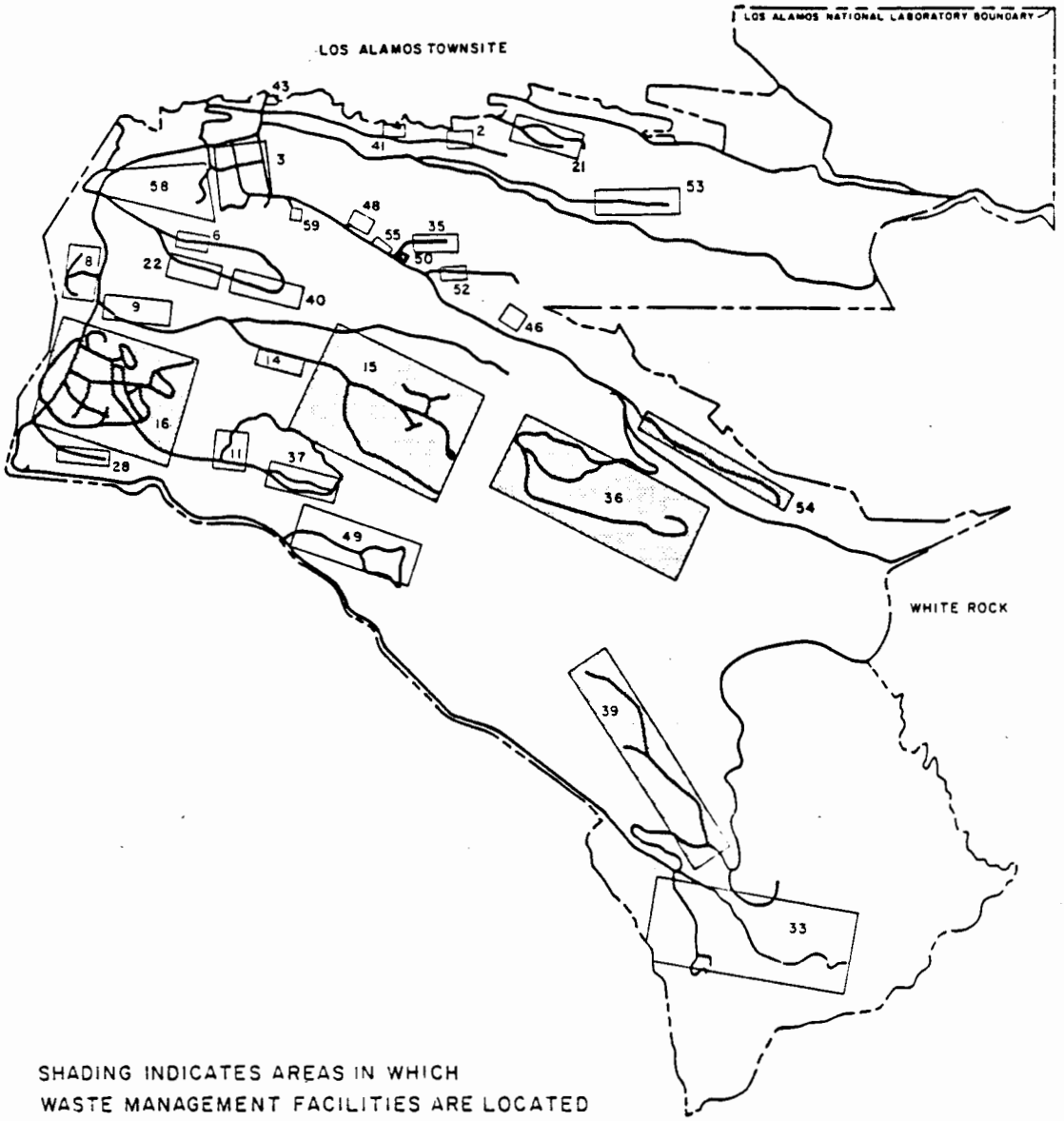

SHADING INDICATES AREAS IN WHICH WASTE MANAGEMENT FACILITIES ARE LOCATED

4000 0 4000

SCALE

FIGURE 2

LOS ALAMOS TECHNICAL AREAS

PREPARED FOR

LOS ALAMOS NATIONAL LABORATORY

LOS ALAMOS, NEW MEXICO

IT CORPORATION

WN	MJG	CHECKED BY		DRAWING NUMBER 30101/-02 A102
JY	11/16/87	APPROVED BY		

32803

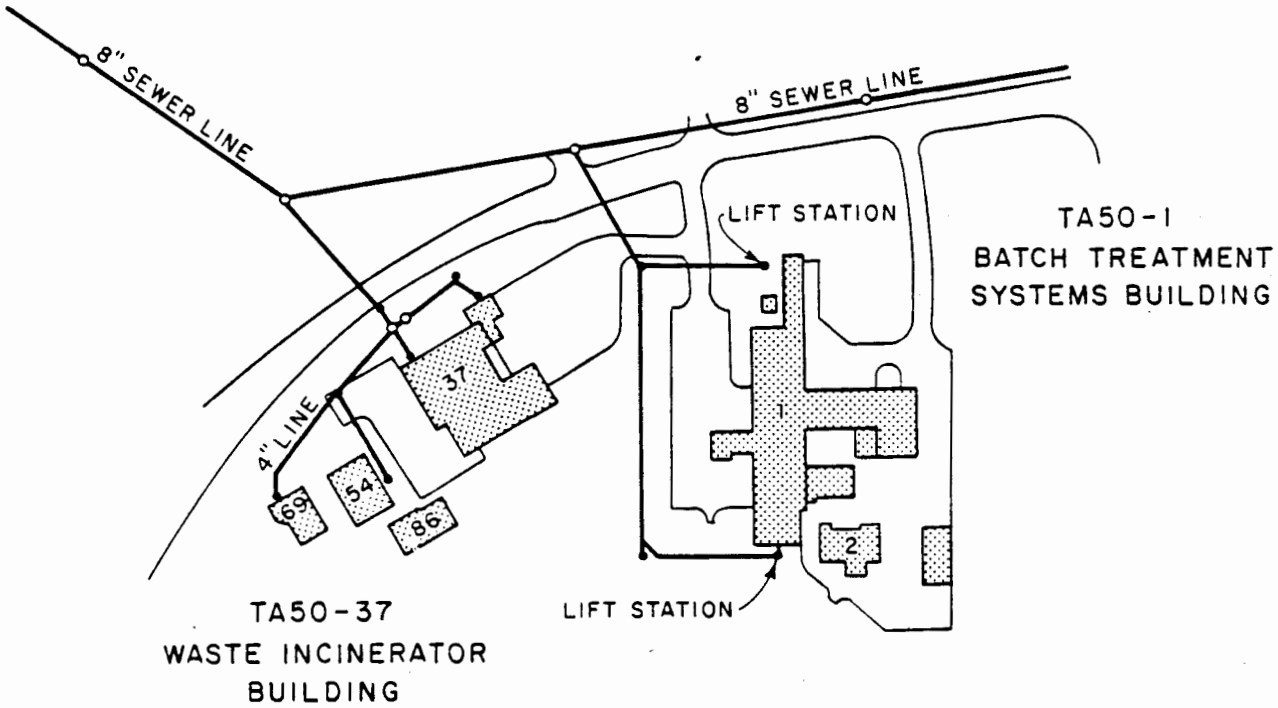

FIGURE 3

TA-50

PREPARED FOR

LOS ALAMOS NATIONAL LABORATORY

LOS ALAMOS, NEW MEXICO

© 1984 IT CORPORATION
ALL COPYRIGHTS RESERVED

Do Not Scale This Drawing

... Creating a Safer Tomorrow

DRAWN	LLF	CHECKED BY		DRAWING NUMBER
BY	11/16/87	APPROVED BY		36-17-02 A110

65360

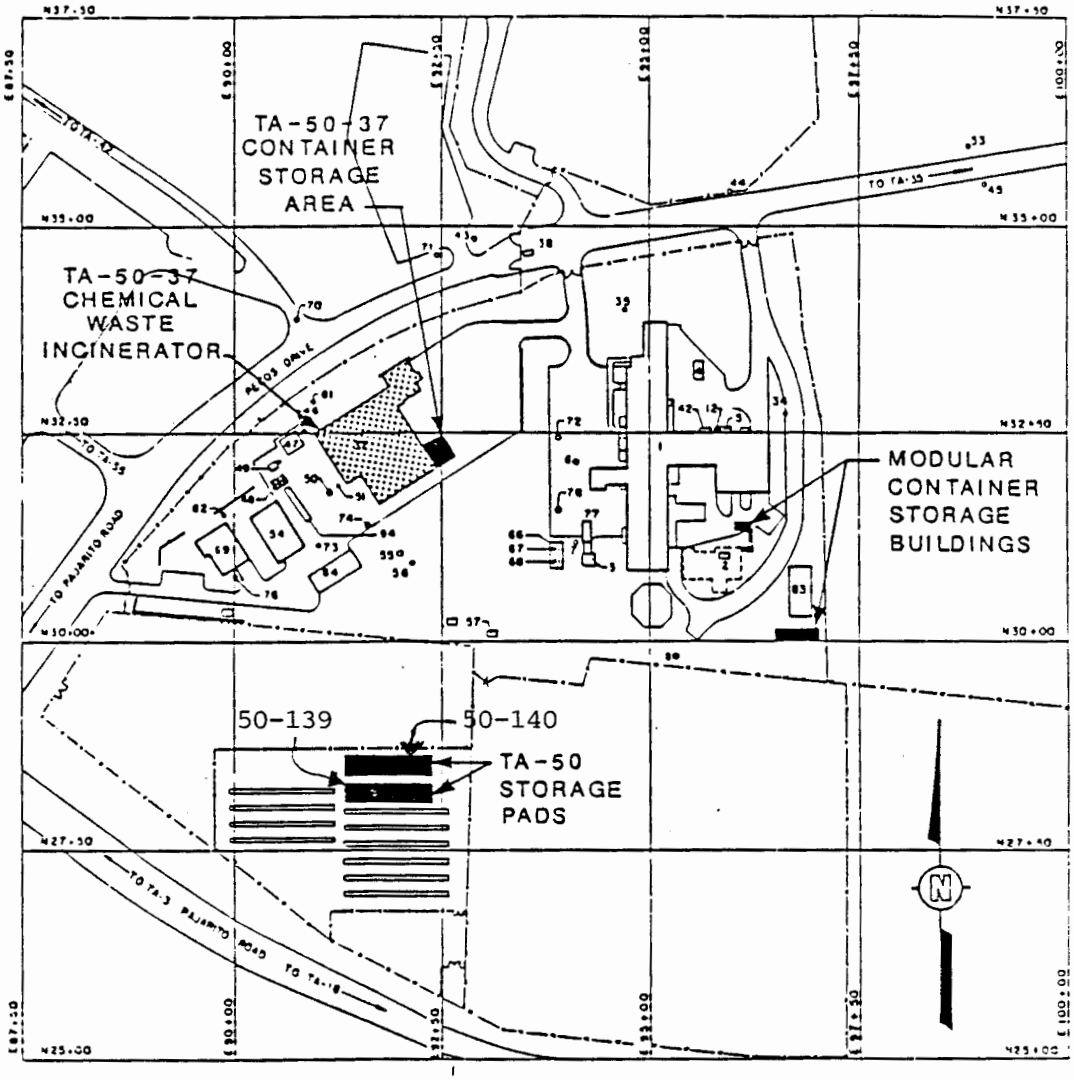

FIGURE 4

LOCATIONS OF TA-50
CHEMICAL WASTE INCINERATOR
AND CONTAINER STORAGE
UNITS

PREPARED FOR

LOS ALAMOS
NATIONAL LABORATORY
LOS ALAMOS, NEW MEXICO

INTERNATIONAL
TECHNOLOGY
CORPORATION

© 1984 IT CORPORATION
ALL COPYRIGHTS RESERVED

Do Not Scale This Drawing

DF	KCT	CHECKED BY		DRAWING NUMBER 3012
	10/11/88	APPROVED BY		

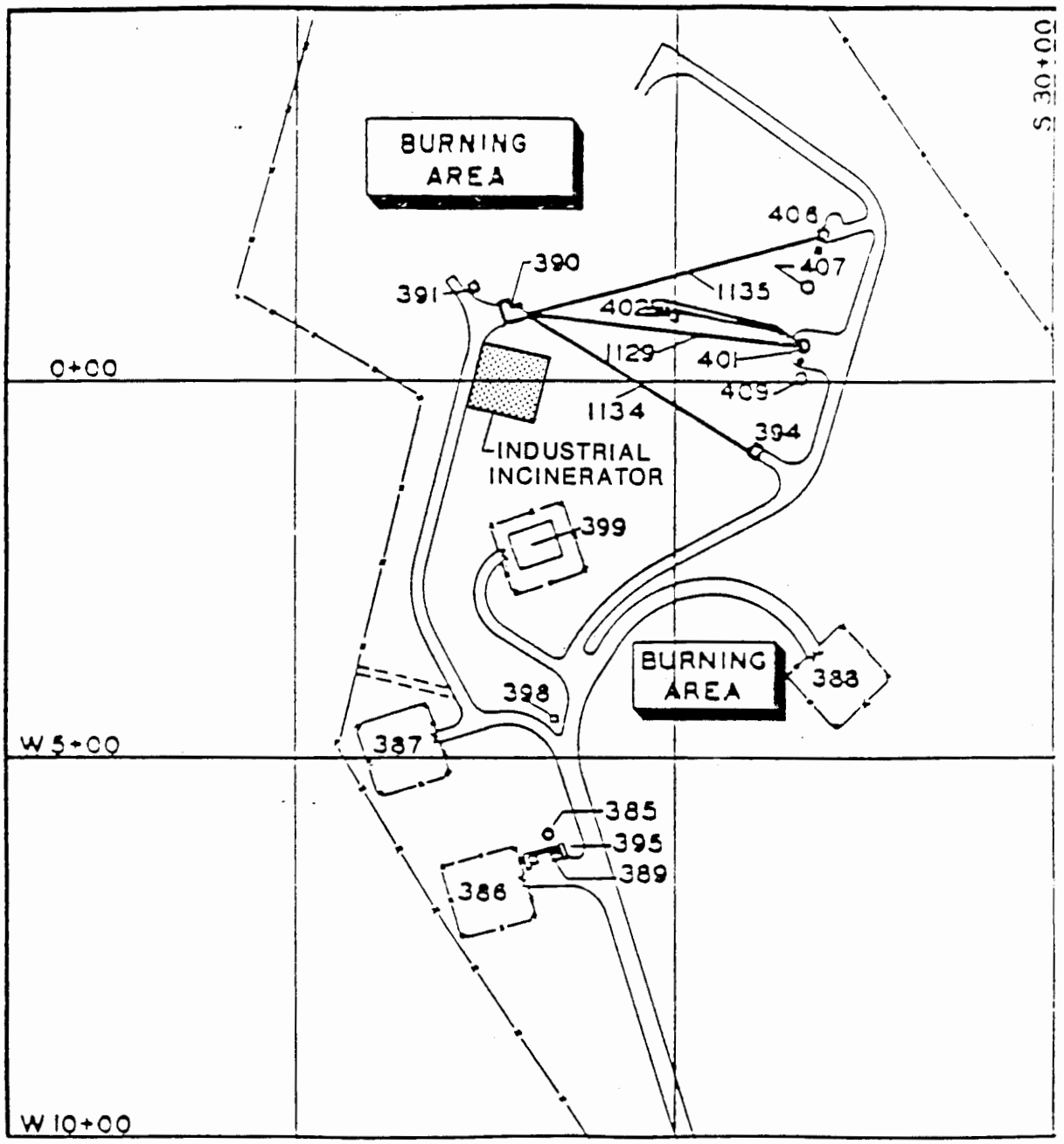

FIGURE 5

TA-16 INDUSTRIAL INCINERATOR

PREPARED FOR

LOS ALAMOS NATIONAL LABORATORY
LOS ALAMOS, NEW MEXICO

© 1984 IT CORPORATION
ALL COPYRIGHTS RESERVED

... Creating a Safer Tomorrow

Do Not Scale This Drawing

65360

NN	LLF	CHECKED BY		DRAWING NUMBER	301017-A117
BY	11/10/87	APPROVED BY			

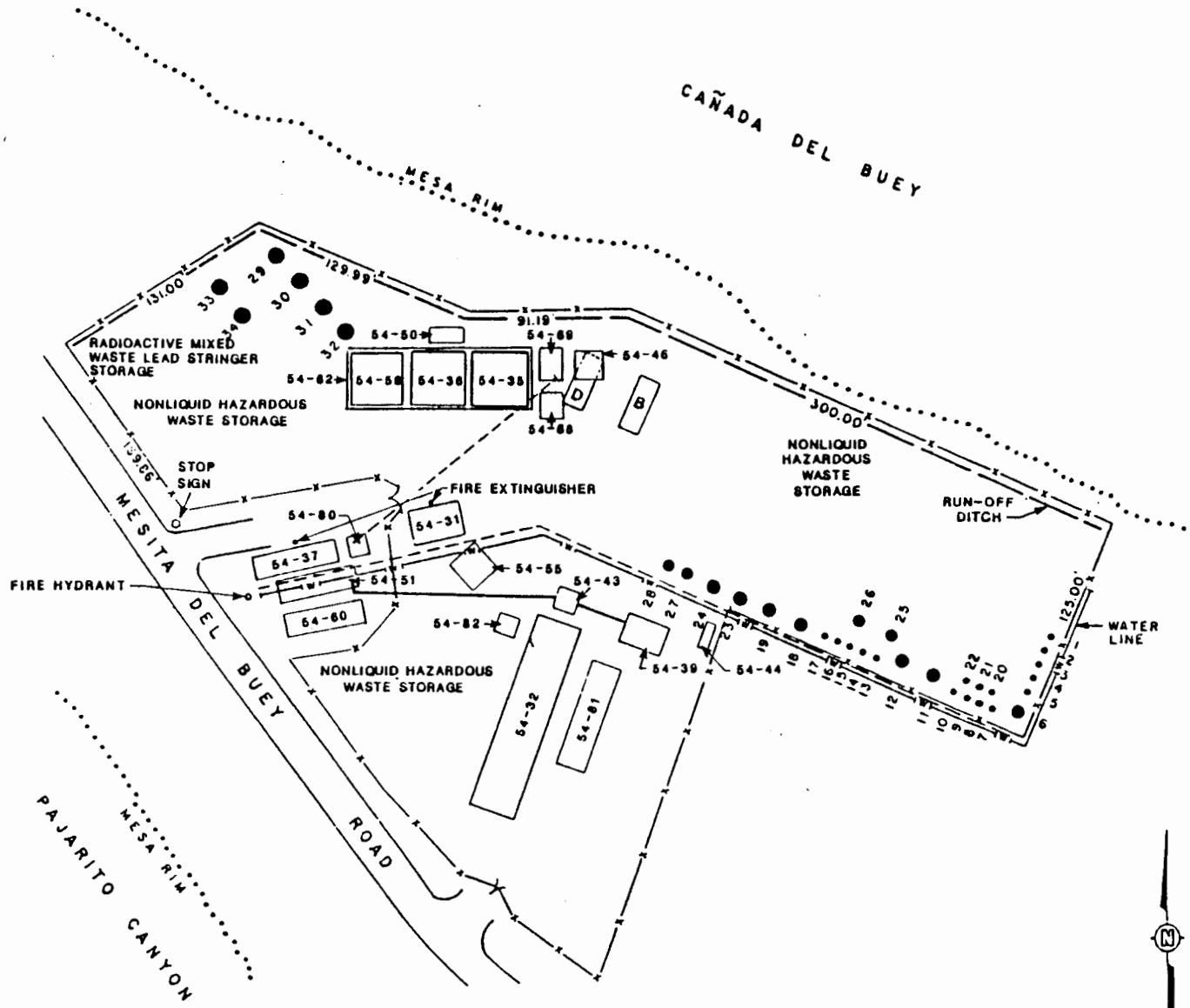

LEGEND

MATERIAL DISPOSAL UNITS:

54-31 PACKAGING BUILDING
54-32 ROOFED WASTE STORAGE PAD
54-35 TREATMENT PAD
54-36 SAMPLING PAD
54-37 OFFICE TRAILER
54-39 PCB BUILDING
54-43 SEPTIC HOLDING TANK
54-44 PROPANE TANK
54-46 EQUIPMENT STORAGE BUILDING
54-50 EQUIPMENT STORAGE BUILDING
54-51 OFFICE TRAILER
54-55 SAMPLE PREP LAB BUILDING
54-58 TRANSPORT PAD
54-60 OFFICE TRAILER
54-62 CANOPY OVER MD-35,MD-36,MD-58
54-68 MODULAR STORAGE BUILDING
54-69 MODULAR STORAGE BUILDING
54-80 SEPTIC HOLDING TANK
54-81 PCB OIL TANK STORAGE
54-82 DRUM CRUSHER
B SURFACE IMPOUNDMENT
D SURFACE IMPOUNDMENT

● LOCATION OF AREA L INACTIVE SHAFTS

FIGURE 6

TA-54 AREA L
WASTE MANAGEMENT UNITS

PREPARED FOR

LOS ALAMOS
NATIONAL LABORATORY
LOS ALAMOS, NEW MEXICO

IT ... Creating a Safer Tomorrow

DRAWING NUMBER 5612161 01 B1
CHECKED BY
APPROVED BY
KCT 10/20/88
DRAWN BY

© 1984 IT CORPORATION
ALL COPYRIGHTS RESERVED
Do Not Scale This Drawing

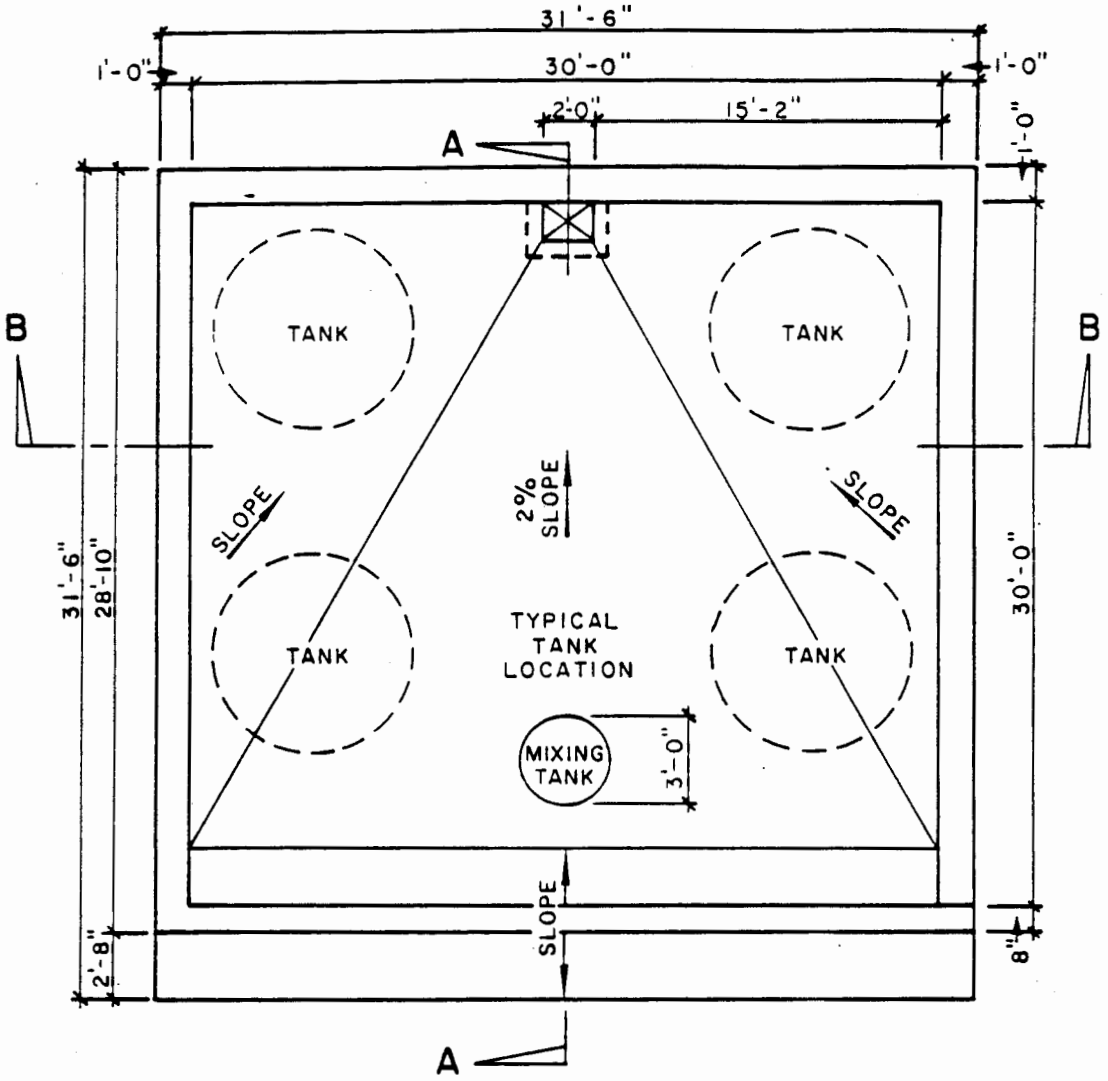

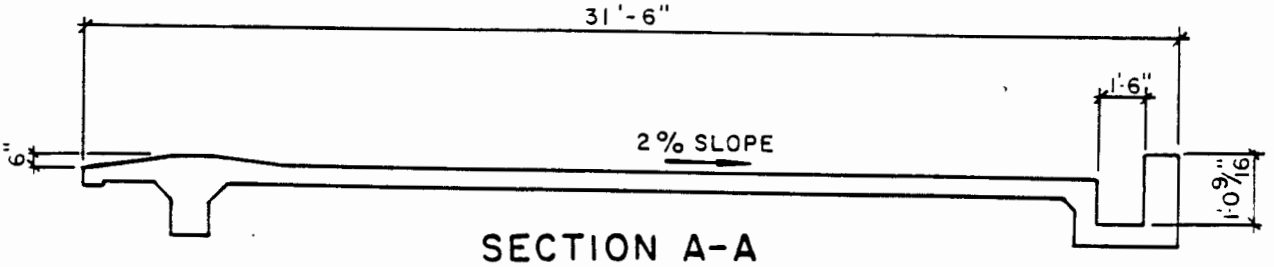

SECTION A-A
NOT TO SCALE

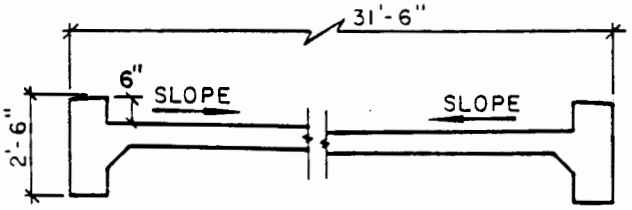

SECTION B-B
NOT TO SCALE

FIGURE 7

TA 54, AREA L
TREATMENT TANKS
PLAN

PREPARED FOR

LOS ALAMOS NATIONAL LABORATORY
LOS ALAMOS, NEW MEXICO

© 1984 IT CORPORATION
ALL COPYRIGHTS RESERVED

Do Not Scale This Drawing

IT ... Creating a Safer Tomorrow

65360

VN	LLF 11/16/87	CHECKED BY / APPROVED BY	DRAWING NUMBER

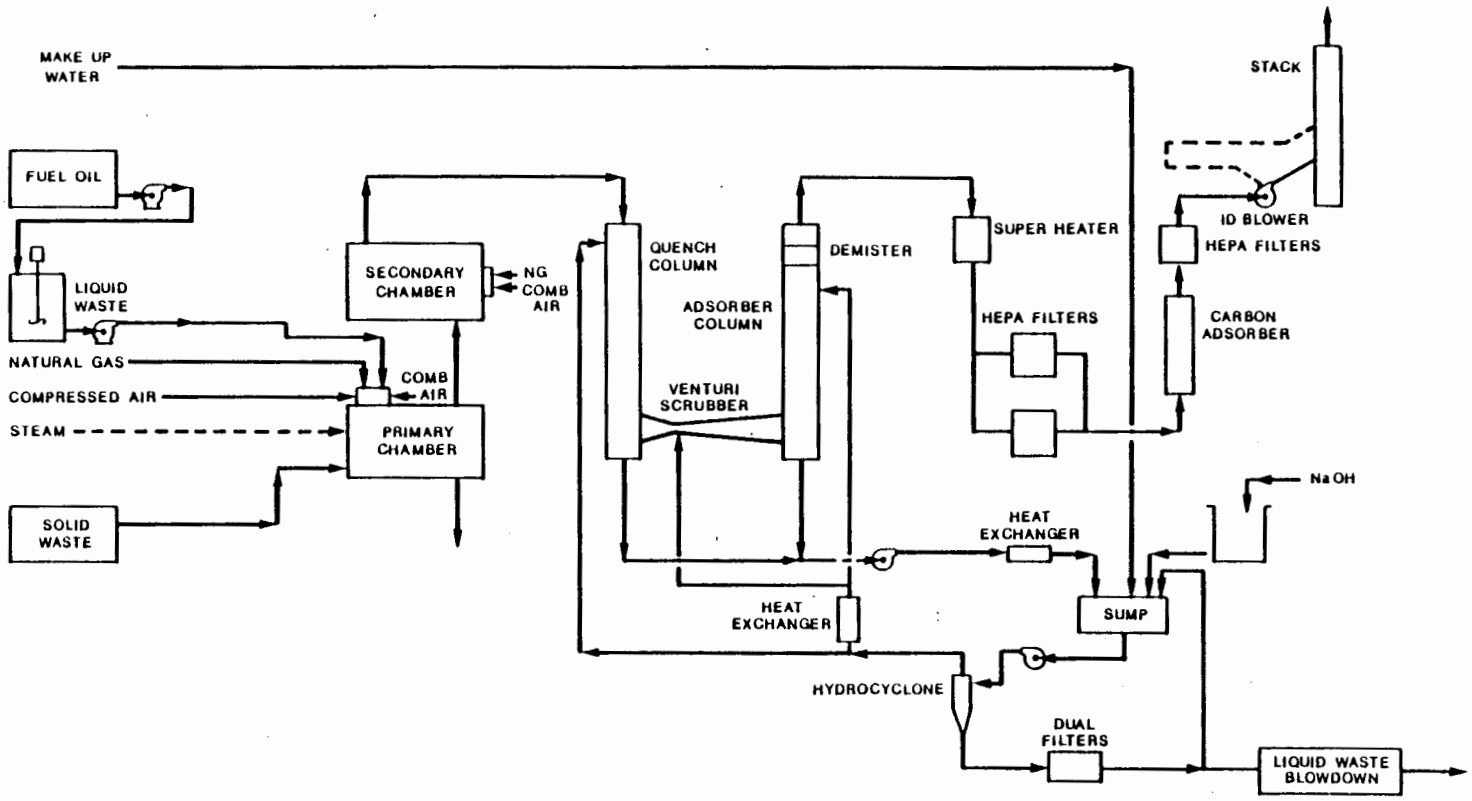

FIGURE 8

INCINERATOR PROCESS DIAGRAM

PREPARED FOR

LOS ALAMOS NATIONAL LABORATORY
LOS ALAMOS, NEW MEXICO

DRAWING NUMBER 301017-02B10

DRAWN BY LLP 11/18/87 CHECKED BY APPROVED BY

1984 IT CORPORATION
ALL COPYRIGHTS RESERVED
Do Not Scale This Drawing

IT ... Creating a Safer Tomorrow

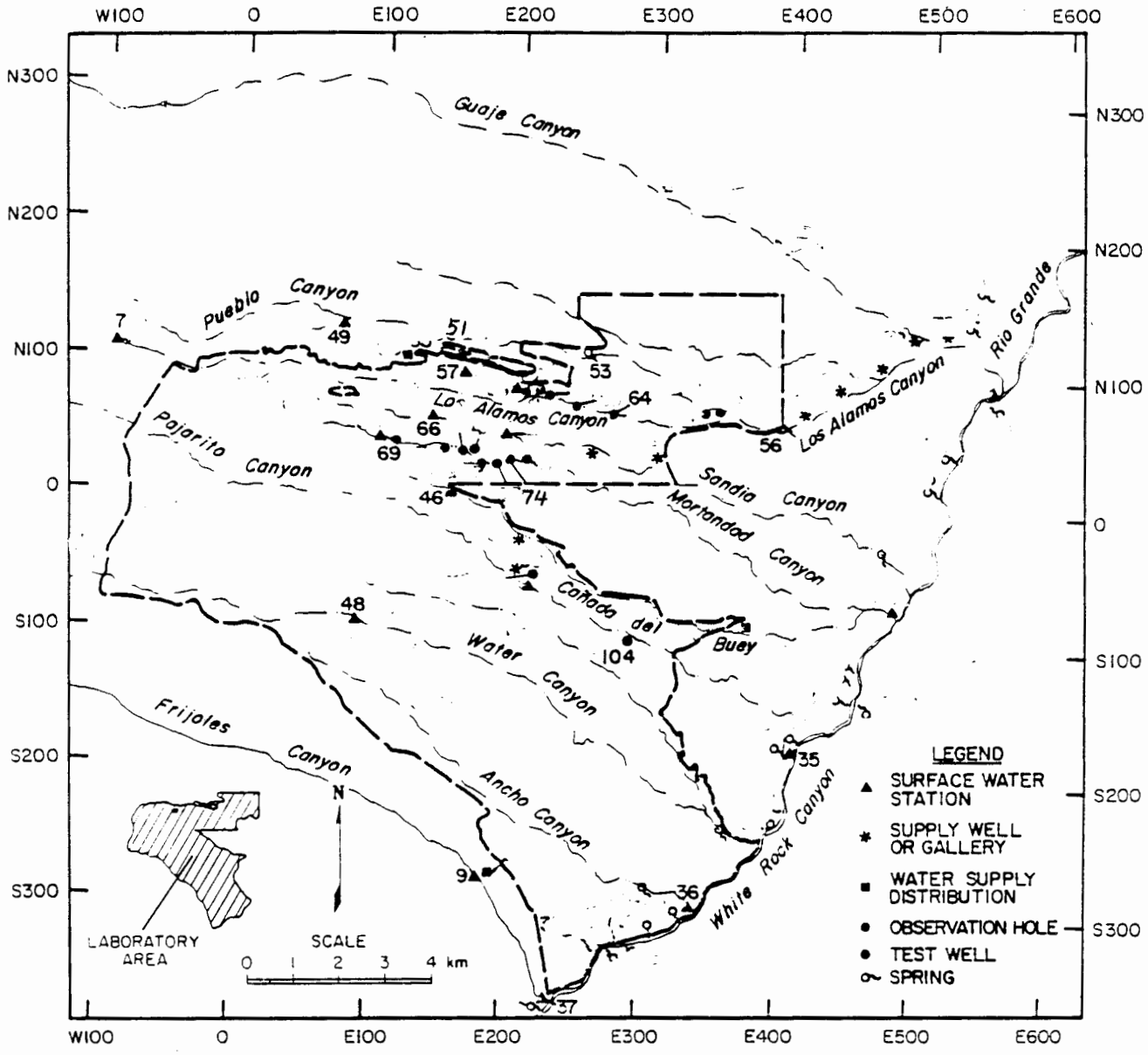

Fig. 9 Surface and ground water sampling locations on and near the Laboratory site.

FIGURE 10

FACILITY RELEASE INSPECTION REPORT

Submit to:

Director, E.I.D.
Attn: HWB / SWB
1190 St. Francis Drive
Santa Fe, NM 87503

SAMPLE LOCATION _____
SAMPLE DATE _____
SAMPLE NUMBER _____
SAMPLE COLLECTOR _____

METALS (Totals)

TRT.*		CODE	UNITS	QUANTITY	DATE ANLYZD
___	Arsenic,	01002	ug/l	_____	_____
___	Barium	01007	ug/l	_____	_____
___	Cadmium	01027	ug/l	_____	_____
___	Chromium	01034	ug/l	_____	_____
___	Lead	01051	ug/l	_____	_____
___	Mercury	71900	ug/l	_____	_____
___	Selenium	01147	ug/l	_____	_____
___	Silver	01077	ug/l	_____	_____
___	Copper	01042	ug/l	_____	_____
___	Iron	01045	ug/l	_____	_____
___	Berylium	01012	ug/l	_____	_____
___	Nickel	01067	ug/l	_____	_____
___	Zinc	01092	ug/l	_____	_____

* Annotate field treatment as follows: **NF** = no filtration and/or **A** = 5 ml HNO3

ORGANICS

SUBSTANCE	CODE	UNITS	QUANTITY	DATE ANALYZED
_____	_____	_____	_____	_____
_____	_____	_____	_____	_____
_____	_____	_____	_____	_____
_____	_____	_____	_____	_____
_____	_____	_____	_____	_____
_____	_____	_____	_____	_____
_____	_____	_____	_____	_____
_____	_____	_____	_____	_____

(Continue on a separate sheet if required)

TABLE I-1

TECHNICAL AREA ZERO GENERATION SITES

DESIGNATION	DESCRIPTION	ANTICIPATED WASTES
0-480	Pajarito School Engineering offices	D001, D002
0-1197	Mesa School Training offices/classrooms	Any training materials
0-1237	Pueblo Complex Environmental laboratory	Any sample or analysis reagents

NOTE:

No other sites are included in the on-site definition in permit paragraph I.H.3.c.

TABLE II-1

ENVIRONMENTAL MONITORING LOCATIONS

STATION	N-S Coordinate (LANL Grid)	E-W Coordinate (LANL Grid)	Map No.
Los Alamos Reservoir	N105	W090	7
Frijoles	S280	E180	9
Canada del Buey	N010	E150	46
Water Canyon at Beta	S090	E090	48
Acid Weir	N125	E070	49
Pueblo - 2	N120	E155	51
Pueblo - 3	N085	E315	53
DPS - 1	N090	E160	57
SCS - 2	N060	E140	66
Pajarito Stream	S180	E410	35
Ancho Stream	S295	E340	36
Frijoles Stream	S365	E235	37
Pajarito Canyon (PCO-3)	S098	E293	104
LAO-4.5	N065	E270	64
MCO-3	N040	E110	69
MCO-8	N030	E190	74
Basalt Spring	N065	E395	56

TABLE II-2 SAMPLING PARAMETERS

TOTAL METALS	ORGANICS
Arsenic	Halogenated volatile organics
Barium	Nonhalogenated volatile organics
Cadmium	Acid-extractable semivolatile organics
Chromium	Base-neutral extractable semivolatile organics
Lead	Phenols
Mercury	
Selenium	
Silver	
Nickel	
Berylium	
Copper	
Zinc	
Iron	

OTHER

Cyanide
pH

All methods are as published in US EPA SW-846, 3rd Edition or later.

If any metal's total concentration exceeds that metal's standard for Extraction Procedure Toxicity, a determination of the Extraction Procedure Toxicity concentration for that metal will be performed. Both data will be recorded and reported.

WASTE ANALYSIS PLAN

AND

WASTE SEGREGATION PROCEDURES

PERMIT ATTACHMENT A

NM0890010515-1

ATTACHMENT A
WASTE ANALYSIS PLAN

A.1 Hazardous waste generated by Laboratory activities can be considered as three general types: (1) wastes from processing operations, (2) wastes from research and development (R&D) activities, and (3) high explosive (HE) waste. Each of these general types has unique characteristics. Processing wastes typically are significant volumes of material that contain a very limited number of contaminants. R & D wastes, however, are typically lesser volumes of a variety of laboratory reagents, chemicals, solvents and other general laboratory waste. The composition and concentration of contaminants in a given process waste is generally uniform unless modifications to the process are made. Conversely, the waste species from R & D activities continually vary depending on the activities of the rapidly changing R & D efforts at the Laboratory. HE wastes consist of a narrow assemblage of chemicals, the concentrations of which may vary. The chemical assemblage, however, remains fairly constant.

LANL has developed procedures for the identification and segregation of hazardous wastes. When a waste is identified as hazardous, it is diverted to the appropriate method of storage, treatment or disposal based on its characteristics as determined by the Waste Analysis Plan.

A.2 Types of Waste Generated at Los Alamos

Presented below is a description of the types of wastes generated, treated, and stored at the Laboratory and those disposed of at off-site permitted facilities. The wastes are divided according to process or facility activities which generate the wastes.

A.2.1 Wastes from Basic and Applied Chemistry R & D Programs

Primary Laboratory sites for basic and applied chemistry R & D include the Chemistry and Metallurgy Research Building (TA-3-29), Radiochemistry Laboratory (TA-48), Sigma Building (TA-3-66), and the Health Research Laboratory (TA-43). Typical nonradioactive chemical wastes consist of large quantities of partly empty small containers of laboratory reagents, solvents, test samples, and other laboratory wastes. Up to several hundred waste types consisting of relatively small quantities of different acids, bases, organics, inorganics, reactive metals and other chemicals require disposal. These R & D wastes represent nearly all of the waste species included in Permit Attachment G.

A.2.2 Surface Finishing Process Wastes

The Electrochemistry Section of the MST-7 Materials Technology: Polymers and Coatings Group, located at TA-3-66, generates plating solutions containing heavy metals. Some of the wastes also contain cyanides. These are coded as toxic and reactive wastes D007, D008, D011, F007, and F009. The Print Circuit Board Shop of the MEC-10 Electronic Manufacturing and Technician Resources Group, located at TA-3-40, generates primarily acid/base wastes heavily contaminated with copper. They also generate plating solutions contaminated with lead and mercury. These wastes are coded as D002, D008, and D009, respectively. The Fabrication Section of the M-7 Detonation Systems Group, located at TA-22-91, generates a copper contaminated ferric chloride etching waste that is corrosive. It is coded D002.

A.2.3 Isotope Separation Wastes

The Isotope and Structural Chemistry Group, INC-4, generates 7N nitric and 14N sulfuric acid wastes that are hazardous because of their corrosive characteristics (D002). Based on knowledge of the waste generating processes, it has been determined that these wastes do not contain heavy metals.

A.2.4 Shops Department Wastes

The Main Shops Department, Building TA-3-39, houses most of the machine shop capabilities at the Laboratory. Waste materials from machining operations are segregated by metal when generated. (For example, there are containers for aluminum chips and turnings.) Some machining operations generate waste lithium metal and lithium hydride, both of which are hazardous because of their reactivity (D003). These materials, when generated, are known and are not commingled with other metal wastes. The Main Shops Department also generates waste nonhalogenated solvents (F003) and halogenated degreasers (F001) and solvents (F002).

A.2.5 Explosives Wastes

High explosives (HE) waste is generated by the Dynamics Testing (M) and Design Engineering (WX) Divisions in the course of processing and testing various HE materials. Processing includes pressing, machining, and casting HE. Waste occurs as discrete pieces of HE, as well as chips, machine cuttings, and powder. Solid HE may include off-specification or old explosives, as well as scrap pieces of HE from processing operations. The chips, cuttings, and powder are usually in the form of waterborne suspensions, collected in specially designed accumulating/settling sump tanks. Spent carbon (K045) from the TA-16 wastewater treatment unit is generated approximately twice a year. Wastes also consist of materials contaminated with HE; these may include paper, oil, solvents, wood, machine tools, fixtures, etc. HE-contaminated equipment, tools, and other large items are considered reactive, D003. HE-contaminated oil may also contain listed solvents, F001, F002, F003, and/or F005, as well as exhibit the characteristic of EP-toxicity for barium, D005. Chemically, the predominant wastes consist of HMX (high melting explosives), RDX (cyclonite), TNT (2,4,6 trinitrotoluene), PETN (pentaerythriotol tetranitrate), ammonium nitrate, barium nitrate, TATB (triaminotrinitrobenzene), nitrocellulose, tetryl, nitroguanidine and various plastic binders. Nearly all the HE waste substances are ignitable (D001) or reactive (D003) and barium nitrate is EP toxic (D005). Residues from HE waste are generated by flashing or burning HE waste at TA-16. These residues are typically present in the uppermost layer of sand that covers the burn pad. The sand from the two pads used to burn pieces of explosives is considered hazardous because of its barium content (D005).

A.2.6 Maintenance Activity Wastes

The Laboratory's Engineering Division and support maintenance contractor, Pan Am, generate a variety of wastes in the course of performing maintenance work. Hazardous wastes range from residual pesticides and herbicides (D001 and D016) to paints/thinners (D001, D008, and F003). Classification of these wastes can generally be performed by process knowledge and the use of Material Safety Data Sheets (MSDS's).

A.2.7 Chemically Contaminated Equipment

In addition to the wastes noted above, various laboratory items that contain chemical residues or are otherwise chemically contaminated may be considered hazardous waste. Empty process tanks are typical contaminated items. Empty drums and containers meet the requirements of HWMR-6 Part 2, Section 261.7 and are therefore not considered hazardous waste. Generation of this type of hazardous waste occurs throughout the Laboratory facilities and produces a wide variety of waste types.

A.2.8 Waste Treatment Residues

Treatment operations at the Laboratory generate solid hazardous waste. These residues include the barium contaminated sand from the explosives burning operation, ash from the incinerator, and sludge from the chemical treatment operations. The classification and volume of this waste varies with the waste that was treated.

A.3 Waste Analysis and Handling Procedures for Storage

This section specifies the procedures for the identification and handling of hazardous waste for storage at the Laboratory. The decision process is summarized in Table A-1.

A.3.1 Waste Identification

When chemical substances are declared to be in excess, the originating group completes a Chemical Waste Disposal Request (Form 10-3A Part A, Figure A-1) and sends the form to the Waste Management Group (HSE-7). The request lists the chemical waste the generating group needs to dispose of, the quantity and physical form of the wastes, and other pertinent information such as the condition of the containers. Material Safety Data Sheets (MSDS's) and existing analytical data may also be available and attached.

Using Part B of the Request Form (Form 10-3A Part B, Figure A-1), HSE-7 staff can assign a Reactivity Group Number (RGN) to each container or bottle. The RGN is found from Figure A-2 (excerpted from EPA-600/2-80-076). The referenced EPA document, "A Method for Determining the Compatibility of Hazardous waste," serves as the basis for the Laboratory procedure. For additional information, the user is referred to the EPA document cited. Additional information assigned during this review includes EPA codes and transportation information. The completed request form, container label, and MSDS/analytical data serve as the waste analysis record for the waste to be stored per the following segregation schemes.

A.3.2 Waste Segregation

To prevent adverse interactions of incompatible chemical wastes and to facilitate recycling or treatment of wastes, chemical wastes will be segregated into the following general categories:

- Organics, including solvent wastes such as acetone, benzene, and toluene,
- Corrosive acidic wastes, including organic and mineral acids,
- Corrosive caustic wastes,
- Oxidizers, such as perchloric or chromic acid, and nonacidic oxidizers, such as permanganates and chlorates,
- Reactive metals and compounds, such as sodium, lithium hydride, and phosphorous trichloride,
- Nonreactive metals, salts, and neutral compounds, such as lead and barium salts, and cyanide or sulfide compounds (in <5 gal. quantities only).

Utilizing the RGN assigned to the container and Table A-2, an area for storage of the waste is assigned. The organics and oxidizers have subcategories of segregation that will be followed for packaging/compositing of wastes to ensure that potential incompatibles are not combined together.

A.4 Waste Analysis and Handling Procedures for Treatment and Disposal

The analysis and handling procedures for waste requiring treatment and/or disposal follows. The decision process is summarized in Table A-1.

Several terms used throughout this section require further explanation.

- LDR is land disposal restricted. When used in this section it refers to all waste currently regulated under 40 CFR 268.

- EP Toxic metals means those eight metals regulated under the EP Toxic characteristic.

- KOP refers to knowledge of process. In the case of original containers of materials, the information from the Chemical Disposal Request Form, as described earlier, is the KOP documentation. All other waste is documented by previous analyses or information provided by the generator.

- Labpack waste refers to original containers of hazardous materials no greater than 5 gallons in size.

- Coliwasa sampler also includes the use of coliwasa type sampling apparatus.

A.4.1 Organic Waste

Organic waste is split into four processing categories: uncomposited labpack waste, drummed material, composited labpack waste, and composited drummed waste. The following discussions treat each as a unique analysis entity.

A.4.1.1 Uncomposited labpack waste

These wastes are those, that due to their toxicity or their physical (solid) state, will not be composited but will be packaged in overpack containers with absorbent. The entire container is then incinerated. The Laboratory's incinerator cannot generally receive such a package, therefore, most of this waste is and will be shipped offsite. The packing list of bottles and cans in the overpack container serves as the analytical record. This listing is sufficient to allow the identification of any and all LDR waste.

A.4.1.2 Drummed waste

There are very few ongoing operations at the Laboratory that generate an organic process waste. As a result, each drum of this waste is virtually a unique entity. The exception would be those cases where we know more than one drum of waste came from the same place, e.g. 400 gallons of oil drained from the same machine reservoir. The drums are all sampled using a coliwasa sampler if liquid or a core sampler if solid. Since this waste is destined for incineration, the following parameters are tested for: pH, ash content, viscosity, heat value, EP toxic metals, total organic halogen, total organic chlorine, sulfur,and chemical composition. This latter will identify approximately ninety-five percent of the substances that are present in the waste. Availability of documented KOP will determine if the organic trace analyses need to be performed. Documentation or analyses will identify the presence/absence of organic LDR compounds, trichlorofluoromethane, bromoform, dichlorodifluoromethane and ethylene dibromide. These latter four compounds are only necessary if the waste is to be incinerated onsite. The test methods are listed in Table A-3.

Throughout the year, containers of organic waste mixtures, smaller than a 55-gallon drum, are generated in the many laboratories at LANL. The generator maintains a list of the substances placed in these containers. This allows HSE-7 personnel to confirm compatibility of these wastes before they are composited into 55-gallon or larger containers. When the composite receptacle is full, the waste is analyzed as described above for any large container of organic waste.

Solid organic waste is sampled using a core sampler or a grab sampler if the material can not be penetrated by a core sampler. Analytical parameters, frequencies, and test methods would be the same as those outlined above for any large container of waste. Debris that is organically contaminated is analyzed per Section A.4.8.

A.4.1.3 Composited labpack waste

Composited labpack wastes are those bottles and cans of liquid waste that have been combined for the purpose of incineration. Compatability is ensured by following the procedures in Section A.3.1 and A.3.2. Since all the chemicals in a composite drum are known entities, the list of chemicals and their quantity serves as the primary analysis record. This listing is sufficient to allow the identification of any and all LDR waste. When the drum is full, it is sampled with a coliwasa sampler. Since chemical composition is known, only the physical parameters need to be calculated or analyzed for. If any physical characteristics can not be calculated due to the variety of substances placed in the drum, the sample is analyzed for that parameter. Therefore, analysis or calculation would provide pH, flashpoint, ash content, viscosity, heat value, total organic halogens, and total organic chlorine. The methods used for these analyses are specified in Table A-3. This will be done for each container of composited waste since each container is unique. Calculated parameters for waste to be incinerated onsite will be verified according to the schedule in Permit Module V, C.2.

A.4.1.4 Composited drummed waste

Composited drummed waste are those drums of waste for which the analytical data described in Section A.4.1.3 already exists and are combined in either the TA-54, Area L storage tanks or the liquid feed tanks at the incinerator for the purposes of offsite shipment or onsite incineration. Compatability is ensured by following the procedures in Sections A.3.1 and A.3.2. Chemical and physical parameters can be calculated from the existing data. If at any time calculations of physical parameters, such as heat value, is inadequate, those identified analyses will be redone. The calculations will be performed on each unique tank of waste. Calculated parameters for waste to be incinerated onsite will be verified according to the schedule in Permit Module V, C.2.

A.4.2 Corrosive acid waste

Corrosive acid waste is handled in two primary processing categories: labpack and process waste. The following discussions treat each as a unique analysis entity.

A.4.2.1 Labpack waste

This wastestream consists of original containers of acid waste. The labels on the containers continue to serve as the primary analytical record. Those acids that can be reused by another component of the Laboratory are redistributed for use as a raw material. Those that can not be reused are treated by elementary neutralization. This occurs primarily at the TA-50 Liquid Waste Treatment Plant but could occur throughout LANL in individual laboratories.

A.4.2.2 Process waste

There are three categories of process waste: nonroutine nonmetallic waste, nonroutine metallic waste, and routine waste. Each is discussed separately. Documented KOP will negate the concern for the presence of LDR organic compounds. Therefore, references to LDR in this section refers only to inorganic constituents.

Nonroutine nonmetallic waste is periodically generated throughout the Laboratory. This waste will be analyzed for pH, the EP toxic metals, nickel and thallium. This allows confirmation of the presence/absence of LDR material. The test methods employed are listed in Table A-3. Sampling is performed using a coliwasa sampler. Because this is defined as a nonroutine wastestream, every unique drum or batch will be sampled.

Nonroutine metallic waste is generated primarily by the Laboratory's electroplating operations. At the time of generation, these wastes are identified by the generator as containing heavy metals. The

generator may also provide the approximate metal concentration, if the information is available. This waste will be analyzed for pH, EP toxic metals, nickel and thallium. This allows confirmation of the presence of LDR material and establishes the parameters that are analyzed for at the completion of treatment. The test methods employed are listed in Table A-3. Sampling is performed using a coliwasa sampler. Because this is defined as a nonroutine wastestream, every unique drum or batch will be sampled.

There are five routinely generated acidic wastestreams at Los Alamos: nonmetallic nitric acid, nonmetallic sulfuric acid, nonmetallic acid stream, metallic ferric chloride, and metallic ammonium persulfate. Each of these streams has a confirmed basis for RCRA regulation which establishes the parameters of concern for treatment. All three of the nonmetallic acid streams are routinely analyzed for pH. The metallic ferric chloride is analyzed for pH, chromium, silver, lead, and copper. The metallic ammonium persulfate is analyzed for pH, lead, and mercury. Annually, all of these streams are all reevaluated for pH, all EP toxic metals, nickel, and thallium. This allows confirmation that the waste has not changed in composition and what LDR components are present. Sampling is conducted with a coliwasa sampler. All test methods are listed in Table A-3.

If a nonroutine wastestream becomes a routine waste or a new wastestream is identified, it will follow the pattern established in the above paragraph. Routine testing parameters will be established and reverified on an annual basis.

A.4.3 Corrosive base waste

Corrosive basic waste is split into two processing categories: labpack waste and process waste. The following discussions treat each as a unique analysis entity.

A.4.3.1 Labpack waste

This wastestream consists of original containers of basic waste. The labels on the containers serve as the primary analytical record. Those bases that can be reused by another component of the Laboratory are redistributed for use as a raw material. Those that can not be reused are generally treated by elementary neutralization. This occurs primarily at the TA-50 Liquid Waste Treatment Plant but could occur throughout LANL in individual laboratories.

A.4.3.2 Process waste

There are three categories of process waste: nonroutine nonmetallic waste, nonroutine metallic waste, and routine waste. Each is discussed separately. Documented KOP will negate the concern for organic LDR compounds. Therefore, references to LDR in this section refers only to inorganic constituents.

Nonroutine nonmetallic waste is periodically generated throughout the Laboratory. This waste will be analyzed for pH, the EP toxic metals, nickel and thallium. This allows confirmation of the presence of LDR material. The test methods employed are listed in Table A-3. Sampling is performed using a coliwasa sampler. Because this is defined as a nonroutine wastestream, every unique drum or batch will be sampled.

Nonroutine metallic waste is generated primarily by the Laboratory's electroplating operations. At the time of generation, these wastes are identified by the generator as containing heavy metals. This waste will be analyzed for pH, EP toxic metals, nickel, thallium, and cyanide. This procedure allows confirmation of the presence of LDR material and establishes the parameters that are analyzed for at the completion of treatment. The test methods employed are listed in Table A-3. Sampling is performed using a coliwasa sampler. Because this is defined as a nonroutine wastestream, every unique drum or batch will be sampled.

There are three routinely generated corrosive base process wastestreams at Los Alamos: ammonium etchant, "Replenisher" solution, and "Cuposit". The Replenisher and Cuposit are tradenames. The ammonium etchant is analyzed for pH, copper, and lead. The Replenisher is analyzed for pH and lead. The Cuposit is analyzed for pH and mercury. Annually, these wastestreams are all reevaluated for pH, all EP toxic metals, nickel, and thallium. This allows confirmation of the presence of LDR substances and that the waste has not changed in composition. Sampling is performed with a coliwasa sampler. Test methods used are listed in Table A-3.

If a nonroutine wastestream becomes a routine waste or a new wastestream is identified, it will follow the pattern established in the above paragraphs. Routine testing parameters will be established and reverified on an annual basis.

A.4.4 Oxidizer waste

Oxidizer waste is split into two processing categories: acid waste and uncomposited labpack waste. Acid oxidizer waste is handled per Section A.4.2.

Oxidizer labpack waste is not composited due to the high fire risk of doing so. They are packaged in overpack containers with absorbent. The entire container is then incinerated. The Laboratory's incinerator cannot generally receive such a package; therefore, most of this waste is and will be shipped offsite. The packing list of bottles and cans in the overpack container serves as the analytical record. This listing is sufficient to allow the identification of any and all LDR waste.

A.4.5 Reactive wastes

Reactive waste has only two processing categories: uncomposited labpack waste and routine process waste. (Explosives waste is treated as a separate category of waste and is discussed in Section A.4.7.) The following discussions treat each as a unique analysis entity.

A.4.5.1 Uncomposited labpack waste

Reactive labpack wastes are not composited due to the high fire and explosion risk of doing so. They are packaged in overpack containers with absorbent. The entire container is then incinerated. The Laboratory's incinerator cannot generally receive such a package; therefore, most of this waste is and will be shipped offsite. The packing list of bottles and cans in the overpack container serves as the analytical record. This listing is sufficient to allow the identification of any and all LDR waste.

A.4.5.2 Process waste

The only ongoing operation at the Laboratory that generates a reactive process waste is the machining operations. Periodically, the machinists are required to work with lithium hydride and to a lesser degree lithium metal. This results in drums of lithium hydride dust and lithium chips, respectively. Process knowledge and the isolation of these operations when they do occur serves as the analytical record for this wastestream.

If large quantities of reactive waste should be produced elsewhere in the Laboratory, documented process knowledge would also be used as the analytical record.

A.4.6 Inorganic wastes

Inorganic waste is split into two processing categories: uncomposited labpack waste and process waste. The following discussions treat each as a unique analysis entity.

A.4.6.1 Uncomposited labpack waste

These wastes are generally solid material and therefore do not lend themselves to compositing. They will be packaged in overpack containers with absorbent. The entire container is then usually destined for offsite land disposal. The packing list of bottles and cans in the overpack container serves as the analytical record. This listing is sufficient to allow the identification of any and all LDR waste.

A.4.6.2 Process waste

Four categories of inorganic process waste exist: liquid waste, primary metal waste, nonroutine solid waste, and routine solid waste. Inorganic liquid waste is generally acidic or basic and is thus treated under the scenarios described in Sections A.4.2 and A.4.3.

Process knowledge is considered adequate for the further treatment/disposal/recycle of wastestreams such as lead and mercury. In both cases the metal is available as a hazardous waste but that knowledge alone suffices to allow for proper storage, treatment, and disposal.

Nonroutine solid waste is periodically generated throughout the Laboratory. This waste will be analyzed for EP toxic metals, nickel, and thallium. This allows confirmation of the presence of inorganic LDR material. The absence of organic LDR will be established by either documented KOP or analyses. The test methods employed are listed in Table A-3. Sampling is performed using a core sampler if possible or a grab sampler if it is not possible to penetrate the waste with a core sampler. Because this is defined as a nonroutine wastestream, every unique drum or batch will be sampled.

There is one routinely generated inorganic solid waste at the Laboratory. It is the barium contaminated sand from the explosives burning operation. Barium is the only established parameter of concern for treatment and therefore is the only parameter routinely analyzed for. Annually, a sample will be analyzed for the other listed metals. Sampling is conducted with a core sampler. Test methods are listed in Table A-3.

If a nonroutine wastestream becomes a routine waste or a new wastestream is identified, it will follow the pattern established in the above paragraph. Routine testing parameters will be established and reverified on an annual basis.

A.4.7 Explosives Waste

Due to the limited number of areas producing explosives waste and the safety problems associated with analyzing explosives waste, process knowledge of the waste sent for treatment by open burning or open detonation is the waste analysis record. Table A-4 lists the various explosives used at the Laboratory. Open burning/open detonation is conducted under interim status per HWMR-5 Part VI, Section 265.382.

A.4.8 Contaminated Solid Waste

The waste covered by this category is generally classified as debris. Contaminated soil would be addressed under the respective chemical category as outlined in the above sections. The contaminant of concern is known for all waste in this category but the substrate can not be readily analyzed. Therefore, until the item in question is cleaned it is treated as a hazardous waste. The types of waste covered by this provision would be tanks and rags.

A.4.9 Waste Treatment Residuals

Waste treatment residuals are the liquid and solid wastestreams resulting from the treatment of a hazardous waste. There are currently four types of residual streams: the treated liquid and precipitate

from chemical treatment operations at either TA-50 or -54 and the scrubber water and ash from the incinerator. Barium contaminated sand is also a treatment residue but because it receives further chemical treatment it is discussed in Section A.4.6.2.

The liquid from chemical treatment operations is tested to insure that (a) treatment is complete and (b) remaining chemical concentrations are within the discharge guidelines established under the NPDES permit for the TA-50 radioactive treatment system. Sections A.4.2 and A.4.3 discussed the procedure used to establish those parameters that would be tested for at the conclusion of treatment. If documented KOP can not exclude the presence of F-listed solvents, then each batch of treatment supernate will be tested for the compounds listed in 261.3.(a).2.iv.A and B. Samples from the Batch Waste Treatment Unit are taken from a sampling loop. Samples from the treatment tanks at TA-54 will be taken by either coliwasa or grab sample. Test methods used are provided in Table A-3. The scrubber water from the incinerator will always be within the discharge guidelines established under the NPDES permit for the TA-50 radioactive treatment system thereby negating chemical analysis. The scrubber will be analyzed annually to verify this.

Solids from the chemical treatment operations and the ash from the incinerator are tested for the EP toxic metals that were established before treatment to be present. As necessary, these wastes are then cemented or otherwise solidified. The solidified matrix may again be sampled by removing a sample from the mixture before curing. After curing, it is tested for the same EP toxic metals. Assuming there are no listed materials present, this would allow a determination to be made as to whether the waste remained a hazardous waste or not. This procedure would be followed for each batch of solids requiring processing.

A.4.10 Unknown Material

Occasionally, chemicals of an unknown nature require disposal. These wastes are handled on a case-by-case basis. The individual waste may be tentatively characterized by knowledge of the operations and activities that were performed in the specific area in which the waste was generated. This information is used to restrict the choices of initial waste analysis to a small population of chemicals.

For purposes of managing unknown wastes a small volume is defined at LANL as less than one liquid gallon (or approximately four liters). The rationale for the small volume designation is that this is the minimum quantity of sample which is needed to test if the waste is hazardous. At and below this limit the sample is actually consumed in the analytical procedure. Small volumes of unknown wastes are analyzed for pH, flashpoint, and reactivity. This allows the material to be categorized for further handling.

Volumes greater than one gallon or four liters of a single unknown waste require a more detailed analytical scheme. These wastes are tested for reactivity, corrosivity, ignitability, EP toxic metals, and any other analyses indicated by the initial data gathered on the material. Sufficient detail must be reported to allow the assignment of the proper EPA Hazardous Waste Number to the waste. All test methods used are outlined in Table A-3.

Los Alamos
Los Alamos National Laboratory
Los Alamos, New Mexico 87545

CHEMICAL WASTE DISPOSAL REQUEST
RETURN FORM TO WASTE MANAGEMENT, MS J593
Telephone Number 667-7579

Requested By *(Name A)*	Telephone Number	Group		Date Sent		Data Tracking Number
Waste Generator *(Name B)*	Telephone Number	Tech Area	Building	Area/Wing	Room	Date Picked Up/Initials

Line Number	Number of Containers	Volume of Each Container	CHEMICAL NAME[1]	HAZARD[2]
1				
2				
3				
4				
5				
6				
7				
8				
9				
10				
11				
12				
13				
14				

I hereby certify that the information supplied above is correct.

Generator Signature	Date

[1]CHEMICAL NAME - Name of single compound, names of all compounds in mixture, trade-name and/or number of commercial product. For trade-name products, attach the manufacturer's MSDS.
[2]For HAZARD insert the appropriate letter: C - corrosive, I - ignitable, R - radioactive, T - toxic, X - reactive, S - solid, L - liquid, G - gas.

HS Form Number 10-3A Part A (4/89)

Figure A-1-Chemical Waste Disposal Request Form

REACTIVITY GROUP NO	REACTIVITY GROUP NAME	1	2	3	4	5	6	7	8	9	10	11	12	13
1	Acids, Mineral, Nonoxidizing	1												
2	Acids, Mineral, Oxidizing		2											
3	Acids, Organic		C H	3										
4	Alcohols and Glycols	H	H P	H P	4									
5	Aldehydes	H P	H P	H P		5								
6	Amides	H	H CT				6							
7	Amines, Aliphatic and Aromatic	H	H CT	H		H		7						
8	Azo Compounds, Diazo Compounds and Hydrazines	H C	H CT	H C	H C	H			8					
9	Carbamates	H C	H CT						C H	9				
10	Caustics	H	H	H		H				H C	10			
11	Cyanides	CT CG	CT CG	CT CG					C			11		
12	Dithiocarbamates	H CG P	H CG P	H CG CT		CG CT		6	H C				12	
13	Esters	H	H P						H C		H			13
14	Ethers	H	H P											
15	Fluorides, Inorganic	CT	CT	CT										
16	Hydrazines, Anhydrous		H P											
17	Halogenated Organics	H CT	H P CT					H CT	H C		H CG	H		
18	Isocyanates	H C	H P CT	H C	H P			H P	H C		H P C	H C		
19	Ketones	H	H P						H C		H	H		
20	Mercaptans and Other Organic Sulfides	CT CG	H P CT						H C					
21	Metals, Alkali and Alkaline Earth, Elemental	CG H P	CG H P	CG H P	CG H P	CG H P	CG H	CG H	CG H	CG H	CG H	CG H	CG H CT	CG H
22	Metals, Other Elemental & Alloys in Powder, Vapor, or Sponge	CG H	CG H P	CG					H P CT	C	CG H			
23	Metals, Other Elemental & Alloys in Sheets, Rods, Drops, Moldings, etc	CG H P	CG H P						H P C					
24	Metals and Metal Compounds, Toxic	S	S	S			S	S			S			
25	Nitrides	CG CT	H P E	H CG	CG H E	CG H			C	H C	C	CG H	CG H	CG H
26	Nitrites	H CT CG	H P CT	H							C			
27	Nitro Compounds, Organic		H P CT			H					H E			
28	Hydrocarbons, Aliphatic, Unsaturated	H	H P			H								
29	Hydrocarbons, Aliphatic, Saturated		H P											
30	Peroxides and Hydroperoxides, Organic	H C	H E		H P	H C		H CT	H P E	H P CT		H P CT	H P CT	
31	Phenols and Cresols	H	H P						H C					
32	Organophosphates, Phosphorothioates, Phosphorodithioates	H CT	H CT						C		H E			
33	Sulfides, Inorganic	CT CG	H CG CT	CT		H			E					
34	Epoxides	H P	H P	H P	H P	H		H P	H P		H P	H P	C	
101	Combustible and Flammable Materials, Miscellaneous	H C	H P CT											
102	Explosives	H E	H E	H E					H E		H E			H E
103	Polymerizable Compounds	P H	P H	P H					P H		P H	P H	C	
104	Oxidizing Agents, Strong	H CT		H CT	H P	H P	H P CT	H P CT	H P E	H P CT		H P CT	H P CT	H P
105	Reducing Agents, Strong	H CG	H P CT	H CG	H CG P	CG H P	CG H	H CG	H C				H CT	H P
106	Water and Mixtures Containing Water	H	H						C					
107	Water Reactive Substances	← EXTREMELY REACTIVE												

Figure A-2 Hazardous Waste Compatability Chart

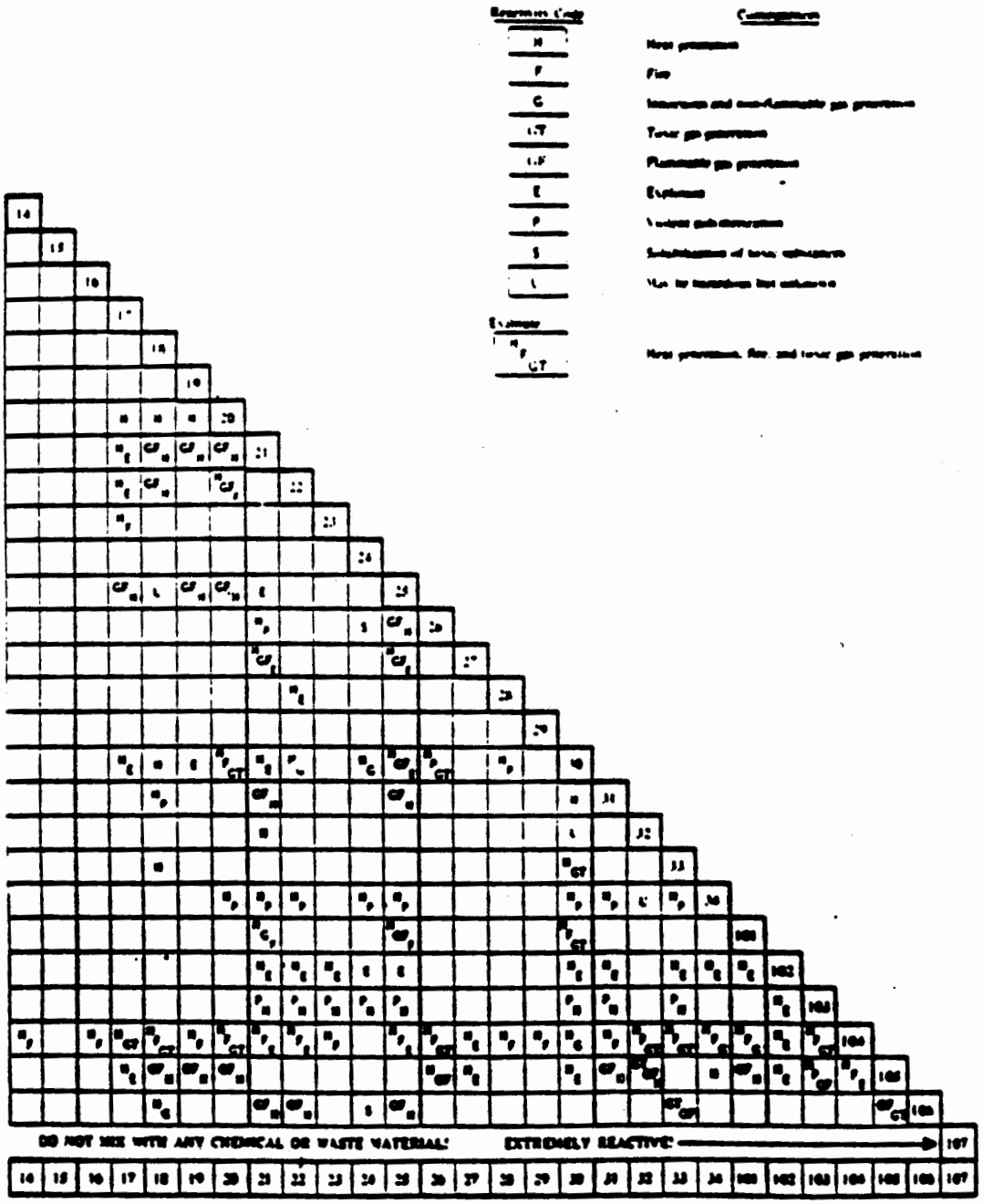

Figure A-2 (cont.)

TABLE A-1
WASTESTREAMS, ANALYTICAL PARAMETERS, AND RATIONALE

Wastestream	Analytical Parameters	Rationale Reference
Organic Waste		
-Uncomposited labpack	Packing list	A.4.1.1
-Drummed	pH, EP toxic metals, TOX, TOC, ash content,viscosity, heat value, sulfur, chemical composition	A.4.1.2
-Composited labpacks and drums	List of chemicals, pH, flashpoint, ash content, viscosity, heat value, TOX, TOC	A.4.1.3, A.4.1.4
Corrosive Acid		
-Labpack	pH, as necessary	A.4.2.1
-Nonroutine, nonmetallic process waste	pH, EP toxic metals, nickel, thallium	A.4.2.2
-Nonroutine metallic process waste	pH, EP toxic metals, nickel, thallium	A.4.2.2
-Routine nonmetallic process waste	pH	A.4.2.2
-Ferric chloride	pH, chromium, silver, lead, copper	A.4.2.2
-Ammonium Persulfate	pH, lead, mercury	A.4.2.2
Corrosive Base		
-Labpack	pH, as necessary	A.4.3.1
-Nonroutine nonmetallic process waste	pH, EP toxic metals, nickel, thallium	A.4.3.2

TABLE A-1 (CONT)
WASTESTREAMS, ANALYTICAL PARAMETERS, AND RATIONALE

Wastestream	Analytical Parameters	Rationale Reference
-Nonroutine metallic process waste	pH, EP toxic metals, nickel, thallium	A.4.3.2
-Ammonium etchant	pH, copper, lead	A.4.3.2
-"Replenisher"	pH, lead	A.4.3.2
-"Cuposit"	pH, mercury	A.4.3.2
Oxidizer		
-Labpacks	Packing list	A.4.4
Reactive		
-Labpacks	Packing list	A.4.5.1
-Process Waste	Knowledge of process	A.4.5.2
Inorganic		
-Labpack	Packing list	A.4.6.1
-Primary Metals	Knowledge of process	A.4.6.2
-Nonroutine Solid	EP toxic metals, nickel, thallium	A.4.6.2
-Barium Sand	Barium	A.4.6.2
Explosives	Knowledge of process	A.4.7
Contaminated Debris	Knowledge of process	A.4.8
Waste Treatment Residues		
-Chemical Treatment Liquids/Solids	Previously established parameters	A.4.9

TABLE A-1 (CONT)
WASTESTREAMS, ANALYTICAL PARAMETERS, AND RATIONALE

Wastestream	Analytical Parameters	Rationale Reference
-Incinerator Ash	Previously established parameters	A.4.9
-Incinerator Scrubber Water	Knowledge of process	A.4.9
Unknowns		
-Small Volume (<1 gal.)	pH, flashpoint, reactivity	A.4.10
-Large Volume	All parameters necessary to identify waste completely	A.4.10

TABLE A-2

Packaging Segregation Scheme

STORAGE CATEGORY	PACKAGING CATEGORY	RGN
Organics (1)	A	4, 5, 9, 13, 14, 16, 17, 19, 26, 29, 31, 32, 101
	B	6, 7, 8, 27, 28
	C	12, 20
	D	34, 18
Oxidizers (2)	A	2
	B	104
	C	30
Acids (3)	N/A	1, 3
Bases (4)	N/A	10, 11, 33, 105
Reactives (5)	N/A	21, 22, 25, 102, 107 - ALL STORED INDIVIDUALLY - NO COMBINING ALLOWED
Nonreactive Metals (6)	N/A	11, 15, 23, 24, 33 - 11 and 33 would only be allowed in labpack, solid quantities -
Others		The following must be evaluated on a case-by-case basis to determine which of the above categories is appropriate: 25, 102, 103.

TABLE A-3
WASTE ANALYSIS PARAMETERS AND TEST METHODS

Parameter	Test Method	Reference[1]
Ignitability	Pensky-Martens Closed-Cup Method	(L) SW1010 (L) ASTM D93-80
Reactivity	Numerous methods and tests[2]	(L,S) SW Section 2.1.3
pH	Electrometric	(L) SW9040
EP Toxicity	EP Toxicity Extraction[3] and Graphite Furnace AA Spectroscopy	(L,S) SW1310
Arsenic		(L) SW7060
Barium		(L) SW7081, SW7080
Cadmium		(L) SW7131, SW7130
Chromium		(L) SW7191, SW7190
Lead		(L) SW7421, SW7420
Selenium		(L) SW7740
Silver		(L) SW7761, SW7760
Mercury	EP Toxicity Extraction[3] and Manual Cold Vapor Technique	(L,S) SW1310
Organochlorine Pesticides	EP Toxicity Extraction[3] and Gas Chromatography	(L) SW8080
Chlorinated Herbicides		(L) SW8150
Toxicity Characteristic Leachng Procedure (TCLP)		(L,S) 40 CFR Part 268, Appendix I
Chemical Composition	95% organic composition by GC/FID	(L) SW 8100
Trace Organic Analysis	Any of the following:	

TABLE A-3 (CONT)
WASTE ANALYSIS PARAMETERS AND TEST METHODS

Parameter	Test Method	Reference[1]
	Volatile organic compounds-GC/MS	(L) SW8240
	Semivolatile organic compounds-GC/MS	
	-Packed column	(L) SW8250
	-Capillary column	(L) SW8270
Heat Value	Bomb calorimeter	(L) A006, ASTM D240
Organic Chlorine	Halide titration of combustion residue	(L,S) A004, ASTM D2361
Ash Content	Residue after combustion in muffle furnace	(L) A001, ASTM D482 (S) A001, ASTM D3174
Cyanide-Free and Total	Distillation and colorimetric (UV)	(L) SW9012
Chrome	Colorimetric method for hexavalent chromium	(L) SW7196
Sulfide	Colorimetric titration	(L) SW9030
Total Metals	Digestion and inductively coupled plasma method	SW3020
Arsenic		(L) SW6010
Barium		(L) SW6010
Beryllium		(L) SW6010
Cadmium		(L) SW6010
Chromium		(L) SW6010
Lead		(L) SW6010
Nickel		(L) SW6010
Selenium		(L) SW6010
Silver		(L) SW6010
Thallium		(L) SW6010
Zinc		(L) SW6010

TABLE A-3 (CONT)
WASTE ANALYSIS PARAMETERS AND TEST METHODS

Parameter	Test Method	Reference (1)
Mercury	Manual Cold Vapor Technique (S) SW7471	(L) SW7470
Free Liquids	Paint Filter Liquids Test	(S) SW9095

(1) "A" refers to Sampling and Analysis Methods for Hazardous Waste Combustion, EPA-600/8-84-002, February 1984.
"ASTM" refers to American Society for Testing Material Standards.
"SW" refers to Test Methods for Evaluating Solid Waste, Physical/Chemical Methods, 3rd Edition, EPA, November 1986.
"L" refers to liquid waste.
"S" refers to solid waste.

(2) Methods for cyanide and sulfide gas generation are pending. SW-846 methods will be used when they become available. Methds recommended by the EPA will be used in the interim.

(3) If EP Toxicity and other analyses do not permit identification of an unknown chemical waste, digested metal samples (per SW3020) will be analyzed for the metals noted.

TABLE A-4

ESTABLISHED EXPLOSIVES AT TA-16
NOMINAL COMPOSITIONS

NAME OR CODE	COMPOSITION
A1 ANFO[a]	Ammonium nitrate/fuel oil/aluminum power
AN	Ammonium nitrate
ANFO	Ammonium nitrate/fuel oil
Baratol	76 wt% Barium nitrate/24 wt% TNT
BDNPA	Bis(dinitropropyl) acetal
BDNPF	Bis(dinitropropyl) formal
Black powder	74 wt% Potassium nitrate/15.6 wt% charcoal/10.4 wt% sulfur
Boracitol	60 wt% Boric acid/40 wt% TNT
BTX	5,7-Dinitro-1-picrylbenzotriazole
Composition A-3	91 wt% RDX/9 wt% beeswax
Composition A-4	97 wt% RDX/3 wt% beeswax
Composition A-5	98.5 wt% RDX/1.5 wt% beeswax
Composition B and B-3	60 wt% RDX/40 wt% TNT
Composition C-3	88 wt% RDX/12 wt% wax
Composition C-4	91 wt% RDX/2.1 wt% polyisobutylene/1.6 wt% motor oil/5.3 wt% de(2-ethylhexyl) sebacate
Cyclotol, 75/25	75 wt% RDX/25 wt% TNT
Cyclotol, 70/30	70 wt% RDX/30 wt% TNT
DATB	Diaminotrinitrobenzene
DBA-1[a]	AN/$NaNO_3$/TNT/H_2O/thickener
Detasheet C	63 wt% PETN/8 wt% NC/29 wt% elastomeric binder
Detasheet D	75 wt% PETN/25 wt% elastomeric binder
	NOTE: Although this material may be red in color, it is an explosive and not an inert material.
DINGU	Dinitroglycoluril
DNPA	2,2-Dinitropropyl acrylate polymer
DNT	Dinitrotoluene
EDC-8[b]	76 wt% PETN/24 wt% Silicone rubber, MS 2420
EDC-28[c]	94 wt% RDX/6 wt% FPC 461
EDC-32[d]	85 wt% HMX/15 wt% Viton A
EDC-37[e]	91 wt% HMX/1 wt% nitrocellulose/8 wt% K-10 liquid
*EDC-38[f]	94.5 wt% HMX/3.5 wt% K-10 Liquid/2 wt% Polyurethane
HBX-1	40 wt% RDX/38 wt% TNT/17 wt% Al/5 wt% Wax/0.5 wt% $CaCl_2$

TABLE A-4

ESTABLISHED EXPLOSIVES AT TA-16
NOMINAL COMPOSITIONS
(CONTINUED)

NAME OR CODE	COMPOSITION
High Energy Propellants[g]	Solid propellants generally used in missile systems
HMX	Cyclotetramethylenetetranitramine
HNS	Hexanitrostilbene
K-10[h]	65.3 wt% dinitroethylbenzene/34.7 wt% trinitroethylbenzene
LX-04	85 wt% HMX/15 wt% Viton A
LX-07	90 wt% HMX/10 wt% Viton A
LX-14	95.5 wt% HMX/4.5 wt% Estane 5702 F-1
Methane/oxygen[h]	Explosive mixtures of methane and oxygen gases
NC	Nitrocellulose, cellulose nitrate
Nitromethane	Nitromethane
NQ	Nitroguanidine
NTO	1,2,4-nitro-triazole-5-one
Octol	75 wt% HMX/25 wt% TNT
PBX-9001	90 wt% RDX/8.5 wt% polystyrene/1.5 wt% dioctyl phthalate
PBX-9007	90 wt% RDX/9.1 wt% polystyrene/0.5 wt% dioctyl phthalate/0.4 wt% resin
PBX-9010	90 wt% RDX/10 wt% Kel-F 3700 elastomer
PBX-9011	90 wt% HMX/10 wt% Estane 5703 F-1
PBX-9205	92 wt% RDX/6 wt% polystyrene/2 wt% dioctyl phthalate
PBX-9206	92 wt% HMX/8 wt% Kel-F 3700 elastomer
PBX-9401	94.2 wt% RDX/3.6 wt% polystyrene/2.2 wt% trioctyl phosphate
PBX-9404	94 wt% HMX/3 wt% nitrocellulose/3 wt% chloroethyl phosphate
PBX-9405	94 wt% RDX/3 wt% nitrocellulose/3 wt% chloroethyl phosphate
PBX-9407	94 wt% RDX/6 wt% Exon 461
PBX-9501	95 wt% HMX/2.5 wt% Estane/2.5 wt% BDNPA/F
PBX-9502	95 wt% TATB/5 wt% Kel-F 800
PBX-9503	80 wt% TATB Class 2)/15 wt% HMX (Class 2)/5 wt% Kel-F 800
PBXW-113	88 wt% HMX/12 wt% rubber/plasticizer binder
Pentolite	50 wt% PETN/50 wt% TNT

TABLE A-4

ESTABLISHED EXPLOSIVES AT TA-16
NOMINAL COMPOSITIONS
(CONTINUED)

NAME OR CODE	COMPOSITION
PETN	Pentaerythritol tetranitrate
Picric Acid	Du Pont 85 wt% pure
PYX	2,6-Bis(picrylamino)-3,5-dinitropyridine
RDX	Cyclonite, cyclotrimethylenetrinitramine
Smokeless Powder (Single Base)	Standard military grades. Single or multi-perforated grains of colloided nitrocellulose. Stabilizers, plasticizers, inorganic nitrates, and other modifying agents may also be present.
Smokeless Powder (Double Base)	Standard military grades. Single or multi-perforated grains of colloided nitrocellulose containing nitroglycerine or nitroglycol. Stabilizers, plasticizers, inorganic nitrates, and other modifying agents may also be present.
STRATABLAST C[a]	Slurry blasting explosive
TAGN[h]	Triaminoguanidine nitrate
TAL-1005E[a]	Slurry blasting explosive
TATB	Triaminotrinitrobenzene
Tetryl	2,4,6-Trinitrophenylmethylnitramine
TNS	Trinitrostilbene
TNT	Trinitrotoluene
TNT/NC	80 wt% TNT/20 wt% NC
Tritonal	80 wt% TNT/20 wt% aluminum powder
XTX-8003	80 wt% Recrystallized PETN/20 wt% Sylgard 182
XTX-8004	80 wt% RDX/20 wt% Sylgard 182

[a]For transportation only to and from M- and WX-Division Groups and storage by group WX-3.
[b]EDC-8 is the United Kingdom's version of XTX-8003.
[c]EDC-28 is the United Kingdom's version of PBX-9407.
[d]EDC-32 is the United Kingdom's version of LX-04.
[e]For shipping, storage, and experimental evaluation of quantities less than 5 g and for assembly of finished charges into test devices only.
[f]For shipping, storage, and analytical evaluation of molding powder and assembly of finished pieces into test devices.
[g]After approval by the Explosives Development Committee.
[h]For shipping, storage, and experimental evaluations on less than 5-g quantities.

A.5. Verification Analyses

A.5.1. Knowledge of Process

One in each one hundred Knowledge of Process (KOP) determinations based on a list compiled by the generator as wastes are accumulated in a compositing container will be verified by quantitative chemical analysis. Factory sealed containers and original containers redistributed for use within the facility will not be included in this analysis. Detection of hazardous constituents above one percent by volume, not recorded in the KOP documentation, or variations in concentration greater than

twenty five percent from the estimate $\frac{C_{meas} - C_{est}}{C_{est}} 100 \geq 25$

shall be cause for rejection of the KOP and shall require an investigation into the cause. A written record of the investigation shall be retained with the facility record. Any individual who twice fails to properly document KOP constituents shall be permanently prohibited from KOP certification. An entry to this effect shall be made in the facility record.

Lab packed chemicals in original containers which have been accpted by an off site disposal or treatment facility need not be verified unless rejected by the off site treatment facility.

A.5.2. Annual Verification

All routinely generated waste streams will be annually analyzed to verify they have not changed. Any information which indicates a change in the process which generates the waste and may affect the waste, shall cause the waste to be analyzed not later than the next time the waste is generated. All such analyses shall be recorded in the facility record.

A.5.3. Discharges to the Industrial Wastewater System

In those instances when knowledge of process cannot be used to document the absence of listed hazardous waste solvents in the effluent from the Batch Waste Treatment Unit (BWTU), the Permittee may use the exclusion described in HWMR-5, Part II, Section 261.3(a)(2)(iv). A weekly composite sample will be analyzed from the headworks of the radioactive liquid waste treatment plant at TA-50-1 for the constituents cited in HWMR-5, Part II, Section 261.3(a)(2)(iv)(A) and HWMR-5, Part II, Section 261.3(a)(1)(iv)(B). The average concentration of each category ((A) and (B)) will then be computed from the analytical results and the volume of flow at the headworks will be calculated. In an effort to ensure conservency, the lowest weekly volume and the highest weekly concentration of the composite samples from the most recent 3 week period will be used to compare with each batch's concentration from the BWTU.

A sample from the BWTU effluent will also be taken and analyzed for the same constituents referenced in HWMR-5, Part II, Section 261.3(a)(2)(iv). This sample will be taken from the known volume of effluent present in the BWTU prior to discharge. Effluent will then be temporarily stored in Tuff Tanks(@) while awaiting analytical results. The combination of the TA-50-1 average and the weekly average of the BWTU effluent samples will be evaluated to determine if the cited exclusion can be achieved.

In order to obtain the final concentration of solvents entering the headworks, the weight of solvents in each respective category ((HWMR-5, Part II, Section 261.3(a)(2)(iv)(A) and HWMR-5, Part II, Section 261.3(a)(2)(iv)(B)) for both the BWTU and the TA-50-1 plant will be totaled. The cumulative solvent weight will then be divided by the lowest weekly volume of liquid to be entered into the TA-50-1 plant. This value would then represent the resultant mixture's maximum concentration as it enters TA-50-1 (see equation below). No effluent from the BWTU will be discharged to the TA-50-1 plant if the conditions necessary for the exclusion cannot be satisfied.

The waste generator will document pursuant to Permit Attachment A that process knowledge of the individual waste streams indicates either the absence or presence of spent solvents. If process knowledge confirms the absence of such compounds, the wastes will be discharged without composite weekly samples being collected from the BWTU.

V = Volume (l)
C = concentration (mg/l)

$$C_{final} = \frac{[V_{BWTU} \times C_{BWTU} + C_{TA\text{-}50} \times V_{TA\text{-}50}]}{V_{BWTU} + V_{TA\text{-}50}}$$

INSPECTION PLAN

PERMIT ATTACHMENT B

NM0890010515-1

INSPECTION PLAN
PERMIT ATTACHMENT B
NM 0890010515-1

B.1. TA-50 Batch Waste Treatment Unit and Modular Container Storage Buildings Potential Problems

The batch waste treatment unit and modular container storage area are routinely inspected for potential problems with safety and emergency equipment, security devices, containers, and container storage facilities. Potential problems are listed on an inspection checklist. Potential problems include containment failure, fire, explosion, exposure, deterioration of the batch waste treatment unit or construction materials, and system leakage.

B.1.1. Frequency and Content of Inspection

The batch waste treatment unit is inspected according to the schedule in Table B-1. The modular container storage units are inspected weekly by visually inspecting containers for waste leakage and for corrosion. The batch system is inspected before each use and monitored during operation by the operator. This procedure is intended to detect any cracks, leaks, corrosion, erosion, or wall thinning. In addition, the batch treatment tank shell and liner will be inspected every three years to ensure that the tank walls and liner have not experienced damage due to corrosion or erosion. For the triennial inspection, the tank KYNAR (@) lining will be tested for pinholes, cracks, or other failures using a Holiday Detector (@) spark test or equivalent. The Holiday Detector (@) works by sweeping an electrically charged brush over the liner surface. If a pinhole or crack is present, the liner no longer insulates the metal tank shell from the current, and a spark is produced, thus identifying the failed surface. The tank shell and liner wall thickness will also be acoustically analyzed every three years, to determine the extent of deterioration (ASME NDT Section IX). The acoustic analytic analysis utilizes the travel time or changes of wall thickness. Should the liner wall exhibit considerable (unexpected) thinning, the between inspection frequency will be increased to once each year. The results of the triennial inspection will be maintained in the permanent operating record.

Prior to the interior inspection, the batch treatment tank is emptied by discharging in the normal manner. After it is empty, the tank must be thoroughly cleaned and checked to be sure it is free of flammable, toxic, and corrosive vapors and materials before entry. If this requires steaming, the tank must be cooled after cleaning and the rinse water checked to be sure it is essentially neutral. Any nearby operations considered hazardous to tank entry are shut down. The atmosphere in the tank must be tested for the presence of combustible or toxic vapors and for oxygen content, and the tank must be insulated by disconnecting or blanking off all lines before entry. Agitators must be fixed, so they cannot be started, by locking out, disconnecting wires, etc. Either a blower that provides a minimum of 12 air changes/hour, an air mask, or air pack must be used. A ladder is provided, and a harness and lifeline and means of removing an unconscious person are required. A sufficient number of standby men must be present to give aid in case of trouble.

Low voltage lighting or approved flashlights are used. Protective clothing or equipment may be required in some instances.

B.1.2. Remedial Action

If any defects, deterioration, damage or hazards are discovered during inspection, appropriate remedial actions including repairs, maintenance and replacement will be completed as soon as practical to preclude further damage and reduce the need for emergency repairs. If a hazard is found imminent or if a hazardous situation already exists, remedial action will be initiated immediately and the unit not reused until corrective action is complete. Any remedial action taken due to an inspection will be noted on the inspection log and operating record.

The extent of damage from containment failure is assessed first by the supervisor's observation of the affected area. Upon this visual observation, he will indicate appropriate emergency response procedures, including the call-out list, evacuation, and cleanup. If necessary, the supervisor will also use Laboratory records to determine the chemicals involved. If observations indicate that human health and the environment may be adversely affected, the Contingency Plan will be implemented immediately. If the supervisor decides not to activate the contingency plan, he will notify HSE-8 the next duty day of the circumstances and his decision. This notification and the individual notified will be logged.

Sampling locations are chosen by observation of the released material, if possible. If the release is not observable, sampling locations will be chosen randomly. Guidance in identifying hazardous chemicals is provided by the Safety Group (HSE-3), the Industrial Hygiene Group (HSE-5), the Waste Management Group (HSE-7), and the Environmental Surveillance Group (HSE-8).

If containment failure occurs, wastes will collect in the bermed areas. In the case of a small spill, vermiculite or other compatible absorbent is poured over the spilled liquid. Once the liquid is absorbed, the waste is swept or shoveled and put back into a drum. For a larger spill, the liquid is pumped back into the drums. In either case, once free liquids are removed, the surface is cleaned using cleaners appropriate to the chemicals. All expended cleaning material will be considered hazardous waste and handled accordingly.

Leaks from the batch waste treatment unit will collect in the eight-inch curb which surrounds the system. The liquid will be collected and handled as though it were the system contents. Cleanup measures will be initiated appropriate for the type and extent of the leak.

Leaks from containers in the modular storage buildings will collect in the 500-gallon sump within the unit. In the case of small spills, vermiculite or other compatible absorbent is poured over the spill area and once the liquid is absorbed, it is swept or shoveled into drums or other appropriate containers. For spills involving larger liquid volumes, free liquids are pumped into drums and absorbent is used as above to remove the remaining liquid. Once liquids are removed, the sump is cleaned using appropriate cleaning agents. All expended cleaning material will be considered hazardous waste and handled accordingly.

In the case of exposure, remedial actions include treating the exposed personnel at the HSE-2 Medical Facility and determining the cause of exposure by observation, Laboratory records, and/or sampling.

Similar to hazardous waste releases, the extent of damage from fire and explosion is assessed by visual observations, Laboratory records, and if necessary, sampling. Equipment damaged or contaminated by fire, explosion, or spills is identified by visual inspections and sampling, if necessary.

Daily and weekly inspections of the batch waste treatment unit by batch operators will detect malfunctions and deteriorations of the system. Depending upon the potential for release of hazardous wastes, the system can be shut down. The extent of the problem is assessed by visual observation by the system operator, who determines whether process shutdown should be initiated. At any time there is an evacuation , a leak of hazardous waste from the batch waste treatment unit, a fire or explosion, the addition of hazardous waste or chemicals to the batch tank will be stopped. If the batch is being heated, the steam or hot water to the jacket will be shut off; however, if the batch is being cooled, the cooling water will shut off only if there is danger of contamination of the cooling water. The mixer will also not be shut off unless continued operation poses a unique hazard.

B.1.3. Inspection Logs

Inspections of the TA-50 batch waste treatment system and modular container storage buildings area are conducted by the operating group according to the attached checklists. Results of the inspection, the inspector's name and title, date and time of inspection, and any remedial action taken are recorded on the inspection log sheet, Figures B-1 and B-2. A copy is sent for records to HSE-8 and kept for at least three years from the completion of the inspection or corrective action, which ever is longer. An inspection log is kept near the system at all times. In addition, an operating log will be completed by the process operator. This log is a record of operating conditions and provides evidence that the operator has checked and is aware of the operating status of the system. The time at which entries are made and the actual instrument reading for each variable will be entered into the log. When shutdown occurs, the log will state the nature of the shutdown, the time it occurred, and the suspected cause. Once each shift, the shift supervisor will inspect the facility for malfunctions, deterioration, operator error, and discharges.

B.2. TA-50 Waste Incinerator and Room 117 Storage Area Potential Problems

The waste incinerator system building and Room 117 storage area are routinely inspected for potential problems with safety and emergency equipment, security devices, containers, container storage facilities, and loading and unloading facilities. Inspections of specific equipment and systems are conducted with a frequency appropriate to current operations, as well as appropriate to the equipment and systems. Potential problems include containment failure, fire, explosion, exposure, equipment deterioration or malfunction, and leaks from the incinerator.

B.2.1 Frequency and Content of Inspection

The waste incinerator, storage area, building and emergency equipment are inspected according to the schedule in Table B-1. Standard operating procedures require that process operators "walk through" their operating areas each hour to visually observe, monitor, and record and leaks, spills, malfunctions or other unusual conditions. The walkthrough and remedial actions will be annotated in the operating log.

B.2.2. Remedial Action

If any defects, deterioration, damage or hazards are discovered during inspection, appropriate remedial actions including repairs, maintenance and replacement will be completed as soon as practical to preclude further damage and reduce the need for emergency repairs. If a hazard is found imminent or if a hazardous situation already exists, remedial action will be initiated immediately and the unit not reused until corrective action is complete. Any remedial action taken due to an inspection will be noted on the operating log.

Remedial actions in the case of containment failure, fire, explosion, or exposure are identical to the measures at the TA-50 batch waste treatment unit and modular container storage area. See Section B.1.2 above. Should any of these problems occur, the waste incinerator can be shut down at the discretion of the operator. Failure of the HEPA filtration system or wet scrubbers, equipment deterioration or malfunction, or leaks from the waste incinerator will be remedied during and following process shutdown. The process operator will assess the situation and decide upon which shutdown method will be most expeditious and efficient. He will supervise the operating area during the shutdown process.

B.2.3. Inspection Logs

General inspections are conducted by the operating group according to checklists associated with the operating log. Results of the inspection (Figures B-5 and B-6), the inspector's name and title, and date and time of inspection are recorded on the inspection log sheet. A copy is sent for records to HSE-8 and kept for at least three years after all remedial action is complete. In addition, process operators will fill out process data sheets associated with the operations and every four hours when not feeding wastes. These sheets are record of operating conditions and provide evidence that the operator has checked and is aware of the operating status of the system. The time at which entries are made and the actual instrument reading for each variable will be entered into each checklist. When shutdown occurs, the log will state the nature of the shutdown, the time it occurred, and the suspected cause. Once each shift, the shift supervisor will inspect the facility for malfunctions, deterioration, operator error, and discharges. The time, individual, and results of this inspection will be entered in the log. Prestarting inspection procedures, general inspection checklists and the operating log will be kept with the incinerator system during operations. The waste storage room will be inspected using Figures B-5 and B-6.

B.3. TA-54, Area L Waste Transfer, Packaging and Container Storage Facilities and Treatment Tanks

B.3.1. Potential Problems

Area L is routinely inspected for potential problems with safety and emergency equipment, security devices, containers, container storage facilities, treatment tanks, and loading and unloading facilities. Potential problems are listed on the weekly inspection checklist. The container storage areas will be inspected weekly. The treatment tanks will be inspected weekly and after storms to detect any leakage, free board, damage, overflow, or cracks. In addition, the interior of each treatment tank will be inspected yearly for thin spots or excessive corrosion. Prior to the interior inspection, the treatment tank will be emptied by pumping into drums following standard procedures. After it is empty, any liner is removed and the tank

must be thoroughly cleaned and checked to be sure it is free of flammable, toxic and corrosive vapors and materials before entry. If this requires steaming, the tank must be cooled after cleaning and the rinse water checked to be sure it is essentially neutral. Any nearby operations considered hazardous to tank entry are shut down. The atmosphere in the tank must be tested for the presence of combustible or toxic vapors and for oxygen content. A sufficient number of standby personnel must be present to give aid in case of trouble. Protective clothing or equipment may be required in some instances. Potential problems at Area L include containment failure, fire, explosion, and exposure.

B.3.2. Frequency and Content of Inspection

Area L is inspected according to the schedule in Table B-1. In addition, the treatment tank's shell and liner will be inspected annually to ensure that the tanks walls and liner have not experienced damage due to corrosion or erosion. The annual inspection precedure is the same as the triennial inspection outlined for the TA-50 Batch Waste Treatment Unit Tanks in Section B.1.1. above.

B.3.3. Remedial Action

If any defects, deterioration, damage or hazards are discovered during inspection, appropriate remedial actions including repairs, maintenance and replacement will be completed as soon as practical to preclude further damage and reduce the need for emergency repairs. If a hazard is found imminent or if a hazardous situation already exists, remedial action will be initiated immediately and the unit will be taken out of service until corrective action is complete. Any remedial action taken due to an inspection will be noted on the operating log.

In the case of failure of run-on or run-off control measures, the HSE-7 Group Leader or his qualified designee will assess the damage by visual observations and sampling and monitoring to determine the type and extent of contamination. Mitigation procedures and repairs, such as sandbagging and building berms, will be instituted immediately. All such action will be entered in the site log.

Remedial action in the case of drum or container failure, fire, explosion, or exposure is handled as described for the TA-50 batch waste treatment unit. In addition, soil and water samples will be taken down gradient from the release. At the transfer, packaging and storage facilities in Area L. releases from drum or container failure collect in sumps as well as berms.

If leakage, corrosion, overflow or any other damage is detected in the treatment tanks, the contents will be pumped into a drum or another treatment tank. At least 33 empty drums are always available to hold the maximum amount of liquid in a treatment tank in the unlikely event that the tank is completely full and the contents cannot be pumped into another treatment tank. The portable pumps used for emptying the tank are the same pumps used to draw down the tanks and have adequate capacity to fill 55-gallon drums. The pumps and hose used are compatible with the hazardous wastes they handle and are decontaminated after use by flushing with water. The wash water is handled as hazardous waste. The pumps are located at TA-54, Area L.

B.3.4. Inspection Logs

Each inspection is conducted by the operating groups according to the checklist in the inspection log (Figures B-7 and B-8). Results of the inspection, the inspector's name and title, and date and time of inspection are recorded on the inspection log sheet. A copy is sent to HSE-8 for records and kept for at least three years after the completion of all remedial action.

B.4. TA-50 Concrete Containment Structure

B.4.1. Potential Problems

The TA-50 concrete containment structures are routinely inspected for potential problems with safety and emergency equipment, security devices, containers, container storage facilities, and loading/unloading facilities. Potential problems are listed on a weekly checklist and include containment failure, fire, explosion, exposure, equipment deterioration or malfunction and leaks.

B.4.2. Frequency and Content of Inspection

The TA-50 Storage and associated equipment are inspected in accordance with the schedule in Table B-1. The weekly inspection looks for leaking containers and for deterioration of containers and the containment system caused by corrosion or other factors. Inspectors will use the checklists in Figures B-3 and B-4. Loading/unloading areas will be inspected daily, when used.

B.4.3. Remedial action

If any defects, deterioration, damage, spills or hazards are discovered during inspections, appropriate remedial actions including cleanup, repairs, maintenance and replacement will be completed as soon as practical to preclude further damage and reduce the need for emergency repairs. If an imminent hazard is found or if a hazardous situation already exists, remedial action will be initiated immediately. Any remedial action taken due to an inspection will be noted in the operating log.

In the case of failure of run-on and run-off control measures, the HSE-7 Group Leader or his qualified designee will assess the damage by visual observations and sampling and monitoring to determine the type and extent of contamination. Mitigation procedures and repairs, such as sandbagging and building berms, will be instituted immediately. All such action will be entered in the site log.

Leaks from containers will collect in the individual sump within the unit. In the case of small spills, vermiculite or other compatible absorbent is poured over the spill area and once the liquid is absorbed, it is swept or shoveled into drums or other appropriate containers. For spills involving larger liquid volumes, free liquids are pumped into drums and absorbent is used as above to remove the remaining liquid. Once liquids are removed, the sump is cleaned using appropriate cleaning agents.

In the case of exposure, remedial actions include treating the exposed personnel at the HSE-2 Medical Facility and determining the cause of exposure by observation, Laboratory records, and/or sampling.

Similar to hazardous waste releases, the extent of damage from fire and explosion is assessed by visual observations, Laboratory records, and if necessary, sampling.

Equipment damaged or contaminated by fire, explosion, or spills is identified by visual inspections and sampling, if necessary.

B.4.4. Inspection Logs

Each inspection is conducted by the operating group according to the checklist in Figures B-3 and B-4. Results of the inspection, the inspector's name and title, and date and time of inspection are recorded on the inspection log sheet. A copy is sent for records to HSE-8 and kept for at least three years.

B.5 Preparedness and Prevention Requirements

B.5.1. Equipment Requirements

Internal Communication/Alarm Equipment
The following internal communication/alarm equipment is available at LANL to provide emergency instruction for rapid evacuation and to initiate emergency response:

- Centrex telephone system
- Medium range radio nets (30-60 miles)
- Limited range radio nets (3-10- miles)
- Telephone/radio paging
- Two-way hand held radios
- Emergency central alarm system
- Mechanical central alarm system

Since this equipment is laboratory-wide, it allows all personnel to get in contact with emergency coordinators in all areas of the laboratory. All hazardous waste handling personnel have immediate access to internal alarms or emergency communication devices.

The TA-50 batch waste treatment unit is equipped with telephones, one pull alarm, one automatic thermal alarm, and one automatic smoke alarm. There is an intercom system at each telephone. In the case of an emergency, the nearest source of communication for personnel handling wastes is the intercom/paging systems on each telephone.

The TA-50 waste incinerator and storage area is equipped with telephones throughout the facility. A radio with microphones at remote locations is available. Other communication/alarm equipment available at this facility includes:

- One portable radio
- One radio-equipped vehicle
- telephone paging system
- Internal telephone communication line
- Two-channel work station intercoms for direct communication from process area to offices and labs
- Eleven pull alarms

- Two automatic thermal alarms

The trailer at Area L is equipped with a telephone. A radio-equipped vehicle is available for use at Area L. In addition, Area L is equipped with an alarm system and intercom to area G for evacuation. These are the nearest communication sources for use in the case of an emergency. Because of the proximity of the TA-50 Storage Pads and modular storage units to other TA-50 facilities and because only contained waste is handled at these facilities, individual emergency equipment is not required.

B.5.2. External Communication/Alarm Equipment

The Laboratory has established external communication capabilities with the Los Alamos Police Department and the Los Alamos County Hospital. The following external communication/alarm equipment is available at LANL:

Centrex telephone system

Private telephone lines (if Centrex fails)

Medium range radio nets (30-60 miles)

Limited range radio nets (3-10 miles)

Two national Warning System Stations (NAWAS)

Direct lines from Emergency Operations Centers to KRSN (local radio station)

B.5.3. Emergency Equipment

A list of emergency equipment available at LANL, including types of equipment, locations, and contact phone numbers is shown in Permit Attachment D.

Emergency vehicles are inspected quarterly, according to the schedule in Table B-1. Medical supplies include self-contained breathing apparatuses, wheel chairs, manual resuscitation, portable oxygen units. blankets, blood supplies, and medical kits.

B.5.4. Water for Fire Control

The Department of Energy (DOE) is responsible for overall water production, transmission, and storage for the Laboratory and Los Alamos County. Storage capacity is adequate to provide water for fire fighting purposes.

Hydrant flow tests and block valve inspections are performed annually. Pressure regulating valves are inspected and adjusted every 60 days. Flow rates for hydrants are specified by ENG-8, an experienced fire protection engineering staff, and are dependent upon site needs, including size of building and presence of sprinkler systems.

B.6. Aisle Space Requirements

Aisle space between waste containers at all container storage areas is inspected weekly to insure it is adequate to provide access for inspection purposes, and movement of personnel, containers, and equipment.

There are no ramps provided for fork lifts or drum handling equipment at the TA-50 batch treatment and modular container storage areas. Drums are placed in the container storage using drum slings or hydraulically powered drum tongs on a forklift.

Aisles between rows of drums at the Area L transfer, packaging and storage facilities and at the TA-50 storage pads are maintained at a minimum width of two feet to permit access for inspection and handling. Much of the bermed or curbed areas are ramped to facilitate access of forklifts and drum handling equipment.

TABLE B-1

INSPECTION SCHEDULE

BATCH WASTE TREATMENT UNIT (TA-50-1)	
Once per shift when treating hazardous waste	Log entry
Daily when in use treating hazardous waste	Figure B-1
Weekly	Figure B-2
Triennially	Special Report
MODULAR STORAGE UNITS	
Daily when loading or unloading	Figures B-1, B-7
Weekly	Figures B-2, B-8
CONCRETE CONTAINMENT STRUCTURES	
Daily when loading or unloading	Figures B-3, B-7
Weekly	Figures B-4, B-8
CONTROLLED AIR INCINERATOR	
Hourly when burning hazardous waste	Log entry
Daily when burning hazardous waste	Figure B-5
Weekly	Figure B-6
C.A.I. STORAGE AREA	
Daily when loading or unloading	Figure B-5
Weekly	Figure B-6
WASTE TRANSFER/STORAGE UNIT	
Daily when loading or unloading	Figure B-7
Weekly	Figure B-8
SOLID WASTE STORAGE AREA	
Daily when loading or unloading	Figure B-7
Weekly	Figure B-8
TA-54 AREA L WASTE TREATMENT/STORAGE TANKS	
Daily when in use with hazardous waste	Figure B-7
Weekly	Figure B-8
Annually	Special Report
After Storms	Special Report
EMERGENCY VEHICLES	
Quarterly	Special Report
FIRE CONTROL SYSTEM	
Annually	Special Report

APPENDIX A

RESPIRATORY PROTECTION EQUIPMENT PRACTICES FOR THE CHEMICAL BATCH TREATMENT PLANT

1. INTRODUCTION

The use of respiratory equipment is necessary for the safety and well-being of Group HSE-7 employees engaged in certain waste treatment operations. Respiratory protection equipment is required where effective engineering controls are not yet feasible or where equipment failures or malfunctions could cause hazardous work environments. The Group HSE-7 Plant Operations Section Respiratory Practices Program is in accordance with ANSI Standard Z88.2-1969, Practices for Respiratory Protection and the respirator training program of Group HSE-5.

2. SCOPE

These respiratory protection procedures shall pertain to all Group HSE-7 liquid waste facilities, equipment and operations which may generate potentially hazardous atmospheres involving toxic materials or oxygen deficiencies.

3. RESPONSIBILITIES

The Section Leader for Liquid Waste Operations or the Alternate is responsible for assuring that respiratory protection practices are performed in accordance with the respiratory protection practices outlined in this SOP and any incidents involving the use of respiratory equipment must be reported immediately to Group HSE-5.

HSE-7 personnel shall inspect the self-contained breathing apparatus (SCBA's) periodically; the interval between inspections can be as individually desired, but must not exceed one month. Each inspection must be signed and dated with the breathing air cylinder PSI marked on the inspection sticker. A SCBA inspection form must be completed and sent to HSE-5 - MS486. An inspection and donning procedure is available in each SCBA carrying case. SCBA's shall also be inspected after each use. Group HSE-5 shall be notified immediately of any respirator defects, and the SCBA unit shall be replaced. HSE-5 shall also be notified when the SCBA has been used so that the breathing air tank is immediately replaced.

The HSE-1 HPT shall insure that each respirator user has a current respirator authorization card for the type of respirator that is worn. The HSE-1 HPT shall examine the photo on the respirator authorization card to determine if additional facial hair is present. Additional facial hair voids the respirator authorization card. If this situation occurs, the employee shall not be allowed to wear the respirator or enter any hazardous environment and Group HSE-5 shall be notified immediately to pick up the respirator authorization card.

Each employee shall comply with all health and safety regulations (verbal or written) and shall report any incident involving the improper utilization of respiratory protective equipment immediately to the supervisor.

4. **MATERIAL, OPERATION AND EQUIPMENT CONTROLS**

Full facepiece air-purifying respirators with high efficiency filter are are not approved for emergency situations or in environments containing toxic gases/vapors or in oxygen deficient environments (< 19.5% oxygen by volume). The respirator and canister shall be suited to the contaminant. If there are any questions, contact Group HSE-5.

SCBA's are approved for use in oxygen deficient environments and hazardous concentrations of toxic materials. If the environment contains materials which may be readily absorbed through the skin, an impervious suit is also required. Possible emergencies would include:

- chemical leaks or spills
- smoke
- emergency entry into a confined space

The MSA Model 401 utilizes a high pressure portable air tank which provides a high air flow rate to meet breathing demands during extreme exertion. Generally these units supply breathing air for up to 30 minutes of activity and are equipped with an audible alarm to indicate when the breathing supply is low. The air used for SCBA's must meet the strict purity requirements of the Compressed Gas Association Specification G7.1 for Type I, Class D Breathing Air. Group HSE-5 has facilities available for filling these air tanks with air that meets these purity requirements.

5. PERSONNEL CONTROLS

Each respirator user shall have completed the comprehensive respirator training program (including quantitative fitting for air-purifying respirators) conducted by Group HSE-5 and have in his/her possession a current respirator authorization card for the type of respiratory equipment that is worn.

To prevent accumulation of dirt on the respirator, it should be cleaned after each use with the packets provided at the respirator fitting office. Always inspect air purifying respirators before and after use. Any deterioration shall be reported to the supervisor, and the respirator shall be replaced.

Respirators shall be returned to the TA-50 respirator laundry periodically for professional inspection, cleaning and testing. Frequent users shall return the respirator on a monthly basis, infrequent users shall return respirators on a semi-quarterly basis, and emergency equipment shall be inspected monthly and returned periodically.

Specific indications for canister replacement include:

- high breathing resistance
- leakage, indicated by smell, taste, eye, nose or throat irritation
- canister shelf life has been exceeded

Replacement canisters shall be obtained from Group HSE-5. Spent canister shall be returned to Group HSE-5 for disposal to prevent accidental re-use.

Any sign of nausea or dizziness while wearing a respirator requires an immediate return to uncontaminated air.

The air-purifying respirators shall be stored in a plastic bag with the lens or canister side down to prevent distortion of the sealing surface. Respirators shall be stored away from other equipment, sunlight and excessive heat or cold.

6. EMERGENCY

Dial 9-911 for emergency assistance. The buddy system shall be used with SCBA's, i.e., at least two individuals shall be suited-up and voice and/or visual communication shall be maintained.

7. REFERENCES

- Los Alamos Health and Safety Manual, AR12-1.
- Health and Safety Newsletter No. 75-4.
- Practices for Respiratory Protection, ANSI Z88.2-1969
- Occupational Safety and Health Standards, 29 CFR 1910, 1976

WEEKLY To be completed on the first working day of the week.

INSPECTOR: _____ DATE: _____ TIME: _____

PART IV - Enter condition of item inspected (OK or AR*) in "condition" column. Describe action and date taken in "Action/Date" column.

ITEM	INSPECTED FOR	CONDITION (OK or AR*)	ACTION AND DATE ACTION TAKEN
STRUCTURAL INTEGRITY OF CONTAINERS/TANKS	DETERIORATION AND LEAKS, TANKS INCLUDES ALL VALVES, PIPES, FLANGES		
COVER/LID OF CONTAINERS	CLOSED AND SECURED		
WARNING SIGNS	POSTED & READABLE (BILINGUAL)		
LABELS	"HAZARDOUS WASTE" PRESENT ON ALL CONTAINERS/TANKS		
ACCUMULATION DATE (<90 DAY STORAGE)	PRESENT ON ALL CONTAINERS/TANKS NONE EXCEED 90 DAYS FROM START		
SECURITY	CONDITION OF GATES/LOCKS		
EMERGENCY EQUIPMENT	FIRE EXTINGUISHERS, EYE WASH, SHOWERS, RESPIRATORS		
SPILL CONTROL EQUIPMENT	PRESENT, GOOD WORKING ORDER		
SITE LIGHTING	FUNCTIONS PROPERLY		
HOOD	FUNCTIONIING		

REMARKS:

* Action required

** Includes all associated storage facilities.

For waste removal call HSE-7 at 667-6095 at least 10 working days prior to reaching 90 day storage limit of any container or tank. Request all hazardous waste stored on site be removed at this time.

For questions concerning inspections or regulations contact Tony Grieggs, 5-0451 or Jim white, 5-0677.

cc: Tony Grieggs, HSE-8, MS K490 (Copies only, maintain your original for a minimum of three (3) years.

Last Revision: April 18, 1989

Figure B-2

FACILITY: 50-Batch Plant (Includes structures 114, 137, 138 and portaberm)

FACILITY TYPE: T,S 19__ WEEK OF _____ (MONTH/DAY) THRU _____ (MONTH/DAY)

DAILY PARTS I, II, III - To be completed every day of operation.

PART I. - Enter data in column for day inspected.

DAY	S	M	T	W	TH	F	S
DATE							
TIME							
INSPECTOR							

PART II - Enter condition of item inspected (OK or AR*) in column for day inspected.

ITEM	INSPECTED FOR	S	M	T	W	TH	F	S
**(UN)LOADING AREA TANKS/CONTAINERS	SPILLS AND DETERIORATION							
**CONTAINER STORAGE	SEGREGATED ACCORDING TO COMPATIBILITY							
**CONTAINERS AND TANKS	CLOSED, LABELED AND DATED.							
COMMUNICATION EQUIPMENT	PROPERLY FUNCTIONING							
TANK MONITORING EQUIPMENT	DISCHARGE CONTROLS, TEMP/PRESSURE GAUGES LEVEL (% FULL) (OK?)							
**AREA AROUND TANKS/ CONTAINERS SECONDARY CONTAINMENT	SPILLS, DAMAGE STANDING WATER							
ABOVE GROUND PARTS OF TANK SYSTEM	INTEGRITY, LEAKS CORROSION							

PART III - For any action required noted in PART II, describe below: action required, action taken, date.

Figure B-1

WEEKLY To be completed on the first working day of the week.

INSPECTOR: _____ DATE: _____ TIME: _____

PART IV - Enter condition of item inspected (OK or AR*) in "condition" column. Describe action and date taken in "Action/Date" column.

ITEM	INSPECTED FOR	CONDITION (OK or AR*)	ACTION AND DATE ACTION TAKEN
STRUCTURAL INTEGRITY OF CONTAINERS	DETERIORATION AND LEAKS		
COVER/LID OF CONTAINERS	CLOSED AND SECURED		
WARNING SIGNS	POSTED & READABLE (BILINGUAL)		
LABELS	"HAZARDOUS WASTE" PRESENT ON ALL CONTAINERS/TANKS		
SECURITY	CONDITION OF FENCE/GATES/LOCKS		
SITE LIGHTING	FUNCTIONS PROPERLY		
CONTAINMENT STRUCTURES	INTEGRITY, STANDING WATER EROSION		
CONTAINER STORAGE	SEGREGATED ACCORDING TO COMPATIBILITY, AISLE SPACE		
FIRE EXTINGUISHERS	PRESENT, IN GOOD WORKING		
SPILL CONTROL GEAR	ORDER		
HOSE BIB	LEAKS, FUNCTIONING		
ROAD/WORK SURFACES	CRACKS		
WIND SOCK	DAMAGE, FUNCTIONING		
PALLETS	INTEGRITY, DAMAGE		

REMARKS:

* Action required

For waste removal call HSE-7 at 667-6095 at least 10 working days prior to reaching 90 day storage limit of any container or tank. Request all hazardous waste stored on site be removed at this time.

For questions concerning inspections or regulations contact Tony Grieggs, 5-0451 or Jim white, 5-0677.

cc: Tony Grieggs, HSE-8, MS K490 (Copies only, maintain your original for a minimum of three (3) years.

Last Revision: April 18, 1989

Figure B-4

FACILITY: 50-139, 140

FACILITY TYPE: S 19__ WEEK OF _____ (MONTH/DAY) THRU _____ (MONTH/DAY)

DAILY PARTS I, II, III - To be completed every day of operation.

PART I. - Enter data in column for day inspected.

DAY	S	M	T	W	TH	F	S
DATE							
TIME							
INSPECTOR							

PART II - Enter condition of item inspected (OK or AR*) in column for day inspected.

ITEM	INSPECTED FOR	S	M	T	W	TH	F	S
(UN)LOADING AREA CONTAINERS	SPILLS AND DETERIORATION							
COMMUNICATION EQUIPMENT	PROPERLY FUNCTIONING							
EYE WASH SAFETY SHOWERS	LEAKS FUNCTIONING							

PART III - For any action required noted in PART II, describe below: action required, action taken, date.

Figure B-3

FACILITY. 50-37 (incinerator) includes room 117

FACILITY TYPE: T,S 19__ WEEK OF _____ (MONTH/DAY) THRU _____ (MONTH/DAY)

DAILY PARTS I, II, III - To be completed every day of operation.

PART I. - Enter data in column for day inspected.

DAY	S	M	T	W	TH	F	S
DATE							
TIME							
INSPECTOR							

PART II - Enter condition of item inspected (OK or AR*) in column for day inspected.

ITEM	INSPECTED FOR	S	M	T	W	TH	F	S
(UN) LOADING AREA	SPILLS AND DETERIORATION							
TANK BY-PASS	LEAKS, DETERIORATION							
COMMUNICATION EQUIPMENT	PROPERLY FUNCTIONING							
PUMPS, VALVES PIPES	CONDITION LEAKS							
INCINERATOR EQUIP.	DETERIORATION MALFUNCTION							
TANK DISCHARGE CONTROLS, WASTE FEED CUTOFF (TANK)	ALL OVERFILL & SPILL CONTROL EQUIP. IN GOOD WORKING ORDER							
TANK MONITORING EQUIPMENT	OPERATING PROPERLY							
CONTAINMENT STRUCTURES	INTEGRITY, STANDING WATER CORROSION							

PART III - For any action required noted in PART II, describe below: action required, action taken, date.

Figure B-5

WEEKLY To be completed on the first working day of the week.

INSPECTOR: _____ DATE: _____ TIME: _____

PART IV - Enter condition of item inspected (OK or AR*) in "condition" column. Describe action and date taken in "Action/Date" column.

ITEM	INSPECTED FOR	CONDITION (OK or AR*)	ACTION AND DATE ACTION TAKEN
STRUCTURAL INTEGRITY OF CONTAINERS/TANKS	DETERIORATION AND LEAKS, TANKS INCLUDES ALL VALVES, PIPES, FLANGES		
TANKS AND CONTAINERS	CLOSED AND SECURED		
AISLE SPACE BETWEEN CONTAINERS	AT LEAST ONE (1) FOOT BETWEEN CONTAINERS		
WARNING SIGNS	POSTED & READABLE (BILINGUAL)		
LABELS	"HAZARDOUS WASTE" PRESENT ON ALL CONTAINERS/TANKS		
SECURITY	CONDITION OF GATES/LOCKS		
EMERGENCY EQUIPMENT	FIRE EXTINGUISHERS, EYE WASH, SHOWERS, RESPIRATORS		
SITE LIGHTING	FUNCTIONS PROPERLY		
TANK LEVEL ALARM	FUNCTIONING		
PROCESS GLOVES	TEARS, DETERIORATION		
VENTILATION SYSTEM	FUNCTIONING PROPERLY		
SCBA GEAR	DETERIORATION, FUNCTIONING		
PROCESS FLOOR	CRACKS, SPALLING, COATING		
AISLE SPACE	CLEAR		

REMARKS:

* Action required

For waste removal call HSE-7 at 667-6095 at least 10 working days prior to reaching 90 day storage limit of any container or tank. Request all hazardous waste stored on site be removed at this time.

For questions concerning inspections or regulations contact Tony Grieggs, 5-0451 or Jim white, 5-0677.

cc: Tony Grieggs, HSE-8, MS K490 (Copies only, maintain your original for a minimum of three (3) years.

Last Revision: April 18, 1989

Figure B-6

FACILITY: 54-AREA-L

FACILITY TYPE: T,S,D 19__ WEEK OF _____ (MONTH/DAY) THRU _____ (MONTH/DAY)

DAILY PARTS I, II, III - To be completed every day of operation.

PART I. - Enter data in column for day inspected.

DAY	S	M	T	W	TH	F	S
DATE							
TIME							
INSPECTOR							

PART II - Enter condition of item inspected (OK or AR*) in column for day inspected.

ITEM	INSPECTED FOR	S	M	T	W	TH	F	S
(UN)LOADING AREA	SPILLS AND							
TANKS/CONTAINERS	DETERIORATION							
COMMUNICATION	PROPERLY							
EQUIPMENT	FUNCTIONING							
TANKS (ALL	DISCHARGE CONTROLS							
ABOVE GROUND	CONDITION, LEAKS							
PORTIONS)	LEVEL (6" FREEBOARD)							
SURFACE IMPOUNDMENTS	FREEBOARD (2 ft)							
AND CONTAINMENT	SUDDEN DROPS IN LEVEL							
PORTA BERM	LEAKS CONDITION							
RUN ON/OFF CONTROL	INTEGRITY, EROSION							
	PONDING							
EYE WASH	LEAKS FUNCTIONING							
SAFETY SHOWERS								

PART III - For any action required noted in PART II, describe below: action required, action taken, date.

RECEIVED
APR 27 1989
HAZARDOUS WASTE SECTION

Figure B-7

Enclosure 3

WEEKL. To be completed on the first working day of the week.

INSPECTOR: _____ DATE: _____ TIME: _____

PART IV - Enter condition of item inspected (OK or AR*) in "condition" column. Describe action and date taken in "Action/Date" column.

ITEM	INSPECTED FOR	CONDITION (OK or AR*)	ACTION AND DATE ACTION TAKEN
STRUCTURAL INTEGRITY OF CONTAINERS/TANKS	DETERIORATION AND LEAKS, TANKS INCLUDES ALL VALVES, PIPES, FLANGES		
COVER/LID OF CONTAINERS	CLOSED AND SECURED		
WARNING SIGNS	POSTED & READABLE (BILINGUAL)		
LABELS	"HAZARDOUS WASTE" PRESENT ON ALL CONTAINERS/TANKS		
ACCUMULATION DATE (<90 DAY STORAGE)	PRESENT ON ALL CONTAINERS/TANKS NONE EXCEED 90 DAYS FROM START		
RUN ON CONTROL (AREA L,H LANDFILL)	INTEGRITY, EROSION PONDING		
COVER INTEGRITY (AREA L,H LANDFILL)	EROSION, SUBSIDENCE WATER INTRUSION		
SECURITY	CONDITION OF FENCE/GATES/LOCKS		
SITE LIGHTING	FUNCTIONS PROPERLY		
CONTAINMENT STRUCTURES	INTEGRITY, STANDING WATER VEGETATION, EROSION		
CONTAINER STORAGE	SEGREGATED ACCORDING TO COMPATIBILITY, AISLE SPACE		
HOSE BIB	LEAKS, FUNCTIONING		
STORAGE SHED	FLOOR DAMAGE, LIQUID		
ROAD/WORK SURFACES	CRACKS		
WIND SOCK	DAMAGE, FUNCTIONING		
SHAFT COVER AND RAIL	DAMAGE		
PALLETS	INTEGRITY, DAMAGE		
TREATMENT TANKS	LEAKS, DAMAGE		
REFRIGERATOR	DAMAGED CONTAINERS		
SPILL CONTROL	PRESENT, IN GOOD		
FIRE EQUIPMENT	WORKING ORDER		

REMARKS:

* Action required

For waste removal call HSE-7 at 667-6095 at least 10 working days prior to reaching 90 day storage limit of any container or tank. Request all hazardous waste stored on site be removed at this time.

For questions concerning inspections or regulations contact Tony Grieggs, 5-0451 or Jim white, 5-0677.

cc: Tony Grieggs, HSE-8, MS K490 (Copies only, maintain your original for a minimum of three (3) years.

Last Revision: April 19, 1989

Figure B-8

PERSONNEL TRAINING

PERMIT ATTACHMENT C

NM0890010515-1

PERSONNEL TRAINING
PERMIT ATTACHMENT C
NM0890010515-1

This attachment describes the personnel training program for Los Alamos National Laboratory in accordance with the regulatory requirements of HWMR-6, Part V,, Section 264.16. The information presented outlines the personnel training programs at the Laboratory. The primary objective of the program is to prepare persons to safely operate and maintain those areas containing hazardous wastes. This training program applies to all employees of Department of Energy (DOE), University of California (UC), Pan American Worldwide Services (PAWS), and their contractors who regularly work at the facility. The degree of training varies with the duties but all personnel receive as an introduction to the RCRA requirements of this permit a minimum of Sections I and II of the training outline, Figure C-1.

C.1. Outline of Training Program

Responsibilities

Figure C-2 presents the organization of Health, Safety, and Environment (HSE) Division. HSE Division handles all waste management activities except for high explosives treatment, which is handled by the WX and M Divisions. Individuals who are directly involved with waste management are in Health, Safety, and Environment Group 7 (HSE-7). PAWS provides trained personnel to assist HSE-7 in waste handling activities. The Environmental Surveillance Group is responsible for RCRA compliance. Personnel in the Occupational Medicine (HSE-2), Safety Group (HSE-3), Industrial Hygiene Group (HSE-5), and Environmental Surveillance Group (HSE-8) are trained in their specialties to provide emergency response support.

C.2. Training Content, Frequency, and Techniques

The training program instituted at the Laboratory includes a combination of internal training courses, on-the-job training, and courses taught by outside contactors.

Records of each waste handling individual's formal training are maintained in the HSE Division office. Training records of current employees are kept until closure of the facility. Records of former employees are kept for at least three years from the date the employee last worked at the facility.

The training outline (Figure C-1) is on file in the HSE Division Office and is available for review by all hazardous waste management and handling personnel, emergency response personnel, and all regulatory agencies. Courses will be reviewed annually and updated as required to maintain currency with RCRA.

The training coordinator will work with the group leaders of HSE-2, 3, 5, 7, and 8, WX and M Divisions, and PAWS to ensure that all employees receive the proper level of training. All new LANL and PAWS employees will receive training within six months of their date of hire or transfer. Personnel will not work in unsupervised positions until they successfully complete the training course.

C.2.1. Internal Training

The personnel training courses emphasize the safe handling of hazardous wastes. Program instructors are trained in hazardous waste management procedures and RCRA provisions. The training program is designed to provide training commensurate with the employee's responsibilities. All employees will receive section I and II training, regardless of their duty assignment.

C.2.2. On-the-Job Training

All waste handler personnel will participate in on-the-job training programs. These programs are designed to give field demonstrations of Laboratory procedures for hazardous waste handling, inspections, and hazardous waste transportation requirements. Personnel responsible for directing on-the-job training participate in the RCRA provisions course so that they are familiar with hazardous waste management procedures as they related to RCRA.

C.2.3. External Training

In addition to internal training, selected personnel will participate in contractor-taught courses. Those personnel who will participate in the external training program training program are listed herein. These contractor-taught courses will serve to supplement the internal training program.

C.2.4. Training Coordinator

The personnel training program is directed by Dr. Thomas C. Gunderson. As Associate Division Leader for the HSE Division, Dr. Gunderson is knowledgeable about hazardous waste management facilities and practices and emergency procedures. Dr. Gunderson is responsible for coordinating the internal and external training courses and for assuring that all personnel receive the required training. The training program provides employees with training relevant to their positions within the organization. Supervisors and staff receive training appropriate to their degree of handling hazardous waste (e.g., reporting and other procedures required for compliance). For example, management responsibilities for compliance with RCRA are assigned to the HSE-7 Group Leader, who receives training in RCRA provisions. Material handlers are trained to maintain proper and safe operating procedures and to respond effectively to spills and other emergencies. Duties for each job description are matched to a LANL training course.

C.3. Emergency Response Training

The outside professionals (PAWS and the Protective Force) assist the Hazardous Waste Emergency Coordinator (HWEC) as soon as they arrive on the scene of the emergency. These people are trained in their specialties (i.e., heavy equipment operation, traffic control). PAWS personnel are also trained in personal safety. At all times during an emergency, these contractors are under the direct supervision of the HWEC and other trained Laboratory personnel. All actions taken by contractors do not perform activities other than those for which they are trained (heavy equipment operations, constructing dikes).

In order to ensure maximum protection of life and property and to mitigate the consequences of an emergency situation, it is imperative that all HSE personnel, WX

and M Division personnel, and PAWS personnel involved in waste handling and emergency response be knowledgeable about appropriate building and operating area emergency procedures. These groups will participate in the Laboratory's formal training program.

In addition to the Laboratory's formal program, division and group leaders and immediate supervisors are responsible for providing education and training in emergency response procedures. Periodic unannounced emergency drills and exercises are used to familiarize employees with emergency procedures. Training is also provided through prominent instruction displays and through presentations and discussions in safety meetings.

Each new or transferred employee is indoctrinated by his immediate supervisor regarding the RCRA requirements which apply, the general emergency procedures and those specific procedures related to his work area. Each employee is advised of changes to any emergency procedures and is given an annual review of procedures affecting his work area. The review may be given separately in writing or included in an overall indoctrination. A record of training will be kept in the employee's personnel file.

Specialized training is given to those employees assigned special functions or specific emergency duties. Emergency response personnel (HSE-2, 5, and 8, the DOE fire Department, Laboratory Emergency Response Coordinators, and Chemical Waste Management Coordinators) participate in the formal Laboratory training program and are required to attend courses on spill response, the RCRA contingency plan and RCRA provisions. All waste handling personnel (HSE-7, WX and M Divisions, and PAWS) also participate in the formal training program in which they are instructed in emergency procedures pertinent to their work area. The emergency procedures instruction in which hazardous waste management and handling personnel and emergency response personnel are required to participate will ensure a coordinated response to hazardous waste emergencies.

C.4. Implementation of Training Program

The introductory training program is offered at six month intervals, when needed, to ensure that all employees receive training within six months of their date of hire or transfer. Employees will not work in unsupervised positions until they have been trained. Employees transferring within divisions of the facility will receive training as if they were new employees.

All hazardous waste management and handling personnel must attend annual refresher courses. These courses are intended to update personnel on Laboratory procedures and provide them with an overview of their introductory training.

In addition, a complete Respirator or self contained breathing apparatus (SCBA) training course is taught annually, where appropriate, and must be successfully completed by hazardous waste handling personnel.

Group leaders, along with the training coordinator, will ensure that all their personnel participate in the introductory and annual training programs.

APR. 21 1989

RCRA JOB DESCRIPTION

TITLE: Group Leader, Waste Management (HSE-7) — #001

A. Required Skills:

- Familiarity with State and Federal Regulations regarding hazardous materials and waste.
- Good technical knowledge of problems associated with hazardous chemical handling and use.
- Ability to communicate with a wide variety of personnel, internal and external to the Laboratory.
- Ability to supervise personnel in proper chemical waste management.

B. Required Education/Training:

- Minimum of a bachelor's degree in chemistry/chemical engineering or an equivalent combination of experience and education.
- RCRA Provisions
- Spill Response
- RCRA Contingency Plan
- Hazardous Waste Handling and Operations

C. Duties:

- Oversee all chemical waste activities.
- Maintain security of waste management facilities.
- Evaluate performance of Section Leaders.

APR. 21 1989

RCRA JOB DESCRIPTION

TITLE: Deputy Group Leader, Waste Management (HSE-7) — #002

A. Required Skills:

- Familiarity with State and Federal Regulations regarding hazardous materials and waste.
- Good technical knowledge of problems associated with hazardous chemical handling and use.
- Ability to communicate with a wide variety of personnel, internal and external to the Laboratory.
- Ability to supervise personnel in proper chemical waste management.

B Required Education/Training:

- Minimum of a bachelor's degree in chemistry/chemical engineering or an equivalent combination of experience and education.
- RCRA Provisions
- Spill Response
- RCRA Contingency Plan
- Hazardous Waste Handling and Operations

C. Duties:

- Fulfill duties of group leader as necessary.

- Interact with waste generators on waste problem solutions (such as identification of unknown waste).
- Write and update all chemical waste procedures.
- Maintain operational records for Area L and batch waste treatment system.
- Assist in on-the-job training for chemical waste handlers.
- Provide input to spill responses for hazardous material/waste as necessary.
- Evaluate overall performance of technicians and staff annually.
- Maintain awareness of changes in RCRA regulations and identify necessary improvements.
- Review and approve hazardous waste generators SOPs and relevant parameters in facility designs.
- Review training records and inspection records for completeness and identify any needs.

APR. 21 1989

RCRA JOB DESCRIPTION

TITLE: Section Leader, Liquid Waste Operations, (HSE-7) — #005

A. Required Skills:

- Familiarity with State and Federal Regulations regarding hazardous material and waste.
- Good technical knowledge of problems associated with hazardous materials and waste.
- Ability to communicate with a wide variety of personnel, internal and external to the Laboratory.
- Ability to supervise personnel in proper chemical waste management.

B. Required Education/Training

- Minimum of a bachelor's degree in chemistry/chemical engineering or an equivalent combination of experience and education.
- RCRA Provisions
- Spill Response
- RCRA Contingency Plan
- Emergency Procedures

C. Duties:

- Coordinate Section capabilities to properly receive, store and treat RCRA hazardous waste.

APR. 21 1989

RCRA JOB DESCRIPTION

TITLE: Lead Engineer, Technical Support Section (HSE-7) — #007

A. Required Skills:

- Familiarity with State and Federal Regulations regarding RCRA-listed hazardous materials.
- Thorough understanding of waste incinerator design and operation.
- Ability to ensure proper collection and archiving of operating data required by incinerator operating permit.

B. Required Education/Training:

- Minimum of bachelor's degree in chemistry/chemical engineering or an equivalent combination of experience and education.
- RCRA Provisions
- Personal Safety
- Hazardous Waste Handling and Operations

  a. Incineration
  b. Acids/Bases
  c. Organics - General
  d. Inorganics - General

- Spill Response
- RCRA Contingency Plan
- Recordkeeping/Inspections
- On-Site Transportation

C. Duties:

- Lead engineer for design, construction, and maintenance of hazardous waste incinerator.
- Train Section staff and technicians on handling of hazardous waste, incinerator operation, and data collection.
- Serve as shift supervisor during incinerator operations.
- Maintain records of required run data in an auditable form.

APR. 21 1989

RCRA JOB DESCRIPTION

TITLE: Staff Member, Technical Support Section (HSE-7) — #008

A. Required Skills:

- Familiarity with State and Federal Regulations regarding RCRA-listed hazardous materials.
- Good technical knowledge of proper handling of hazardous waste forms.
- Good technical knowledge of waste incinerator design and operation.

B. Required Education/Training:

- Minimum of bachelors's degree in chemistry/chemical engineering or an equivalent combination of experience and education.
- RCRA Provisions
- Personal Safety
- Respirator or SCBA
- Hazardous Waste Handling and Operations

  a. Incineration
  b. Acids/Bases
  c. Organics - General
  d. Inorganics - General

- Spill Response
- RCRA Contingency Plan
- Recordkeeping/Inspections

C. Duties:

- Provide engineering support for design, construction, and maintenance of hazardous waste incinerator.
- Assist in handling of hazardous waste as required by operations.
- Assist in collection of required run data.

- Interact with waste generators on waste problem solutions (such as the identification of unknown waste).
- Write and update all chemical waste procedures.
- Maintain operational records for Area L and batch waste treatment system.
- Assist in on-the-job training for chemical waste handlers.
- Provide input to spill responses for hazardous materials/waste as necessary.
- Maintain awareness of changes in RCRA regulations and identify necessary improvements.
- Review and approve hazardous waste generators SOPs and relevant parameters in facility designs.
- Review training records and inspections records for completeness and identify any needs.

- Interact with waste generators on waste problem solutions (such as the identification of unknown waste).
- Write and update all chemical waste procedures.
- Maintain operational records for batch waste treatment system.
- Assist in on-the-job training for chemical waste handlers.
- Provide input to spill responses for hazardous materials/waste as necessary.
- Maintain awareness of changes in RCRA regulations and identify necessary improvements.
- Review training records and inspections records for completeness and identify any needs.

- Assist in on-the-job training for chemical waste handlers.
- Provide input to spill responses for hazardous materials/waste as necessary.
- Maintain awareness of changes in RCRA regulations and identify necessary improvements.
- Review and approve hazardous waste generator's SOPs and relevant parameters in facility designs.
- Design and construct new treatment processes as needed.

APR. 21 1989

RCRA JOB DESCRIPTION

TITLE: Chemical Technician II, III (HSE-7) — #012

A. Required Skills

- Familiarity with State and Federal Regulations regarding hazardous materials and waste.
- Good technical knowledge of problems associated with hazardous materials handling and use.
- Oral communication skills for interfacing with waste generators.

B. Required Education/Training:

- Formal chemistry classes or experience in chemical handling operations
- RCRA Provisions
- Personal Safety
- Respirator or SCBA
- Spill Response
- RCRA Contingency Plan
- Recordkeeping/Inspections
- On-Site Transportation
- Hazardous Waste Handling and Operations

  a. Acids/Bases
  b. Organics - General
  c. Inorganics - General

C. Duties:

- Collect chemical waste from technical areas in Laboratory.
- Segregate and/or package waste for storage/treatment/disposal.
- Transport waste to the storage/treatment area.

APR. 21 1989

RCRA JOB DESCRIPTION

TITLE: Technician Liaison Specialist IV, Technical Support Section (HSE-7) — #013

A. Required Skills:

- Familiarity with State and Federal Regulations regarding RCRA-listed hazardous materials.
- Technical competence in area of proper handling of hazardous materials.
- Good technical knowledge of waste incinerator design and operation.

B. Required Education/Training:

- RCRA Provisions
- Personal Safety
- Respirator or SCBA
- Hazardous Waste Handling and Operations

  a. Incineration
  b. Acids/Bases
  c. Organics - General
  d. Inorganics - General

- Spill Response
- RCRA Contingency Plan
- Recordkeeping/Inspections

C. Duties:

- Provide specialized technical support for proper handling of hazardous wastes.
- Assist in operation of incinerator.
- Assist in collection of required run data.

APR. 21 1989

RCRA JOB DESCRIPTION

TITLE: Electronic Technician III, Technical Support Section (HSE-7) — #015

A. Required Skills:

- Familiarity with State and Federal Regulations regarding RCRA-listed hazardous materials.
- Technical competence in area of mechanical equipment design and fabrication.
- Good technical knowledge of proper handling of hazardous waste forms.
- Good technical knowledge of waste incinerator design and operation.

B. Required Education/Training:

- RCRA Provisions
- Personal Safety
- Respirator or SCBA
- Hazardous Waste Handling and Operations

  a. Incineration
  b. Acids/Bases
  c. Organics - General
  d. Inorganics - General

- Spill Response
- RCRA Contingency Plan
- Recordkeeping/Inspections

C. Duties:

- Provide specialized technical support for design, construction, and maintenance of hazardous waste incinerator.
- Assist in handling of hazardous waste.
- Assist in operation of incinerator.
- Assist in collection of required run data.

APR. 21 1989

RCRA JOB DESCRIPTION

TITLE: Experimental Equipment/Facilities Operator II/III (Area G, HSE-7) — #017

A. Required Skills:

- Familiarity with State and Federal Regulations regarding hazardous materials and waste.
- Good technical knowledge of problems associated with hazardous materials handling and use.
- Oral communication skills for interfacing with waste generators.

B. Required Education/Training:

- RCRA Provisions
- Personal Safety
- Respirator or SCBA
- RCRA Contingency Plan
- Spill Response

C. Duties:

- Assist with chemical waste operations as needed.

- Assist in spill response treatment, cleanup, and disposal operations as required.
- Provide input to updating operational procedures.

- Assist in spill response treatment, cleanup, and disposal operations as required.
- Provide input to updating operational procedures.

APR. 21 1989

RCRA JOB DESCRIPTION

TITLE: Section Leader, Decontamination & Decommissioning — #020

A. Required Skills:

- Familiarity with State and Federal Regulations regarding hazardous materials and waste.
- Good technical knowledge of problems associated with hazardous materials handling and use.
- Ability to communicate with a wide variety of personnel, internal and external to the Laboratory.
- Ability to supervise personnel in proper chemical waste management.

B. Required Education/Training:

- Minimum of a bachelor's degree in chemistry/chemical engineering or an equivalent combination of experience and education.
- RCRA Provisions
- Spill Response
- RCRA Contingency Plan.
- Emergency Procedures

C. Duties:

- Coordinate Section capabilities to properly receive, store, and treat mercury waste.

APR. 21 1989

RCRA JOB DESCRIPTION

TITLE: Team Leader, Staff Members, Waste Generator Interface (HSE-7) — #022

A. Required Skills:

- Knowledge of State and Federal Regulations regarding hazardous materials and waste.
- Technical knowledge of problems associated with hazardous materials handling and use.
- Ability to communicate with a wide variety of personnel, internal and external to the Laboratory.
- Ability to supervise personnel in proper chemical waste management.

B. Required Education/Training

- Minimum of a bachelor's degree in chemistry/chemical engineering or an equivalent combination of experience and education.
- RCRA Provisions
- Personal Safety
- Respirator or SCBA
- Hazardous Waste Handling and Operations

  a. Explosives/Reactives
  b. Acids/Bases
  c. Organics - General
  d. Inorganics - General

- Spill Response
- RCRA Contingency Plan
- Recordkeeping/Inspections
- On-Site/Off Site Transportation

C. Duties:

- Work in the field with waste generators on waste segregation, storage, minimization and transportation issues.

APR. 21 1989

RCRA JOB DESCRIPTION

TITLE: Testing Technician III (M-1) — #024

A. Required Skills:

- Familiarity with State and Federal Regulations regarding hazardous materials and waste.
- Good technical knowledge of problems associated with high explosives (HE) handling and use.

B. Required Education/Training:

- RCRA Provisions
- Personal Safety
- Hazardous Waste Handling and Operations
  - a. Detonation/Burning HE waste
- M-1 Contingency Plan
- Recordkeeping/Inspections
- On-Site Transportation

C. Duties:

- Removes waste from storage for disposal at Q-Site firing area.
- Responsible for small-scale sensitivity evaluation of explosives.
- Responsible for small-scale performance tests.
- Directs conventional firing at Q-Site.

APR. 21 1989

RCRA JOB DESCRIPTION

TITLE: Technical Administrative Specialist (M-1) — #025

A. Required Skills:

- Familiarity with State and Federal Regulations regarding hazardous materials and waste.
- Good technical knowledge of problems associated with high explosives (HE) handling and use.

B. Required Education/Training:

- RCRA Provisions
- Personal Safety
- Hazardous Waste Handling and Operations
  - a. Handling/Detonation/Burning HE waste
- M-1 Emergency Procedures
- Recordkeeping/Inspections
- On-Site Transportation

C. Duties:

- Responsible for site maintenance at TA-9 and TA-14.
- Supervise TA-9 explosives area.
- Develop processing on new materials.
- Coordinate production, assembly and delivery of HE.
- Supervise new equipment installation.
- Supervise HE shop scheduling.

APR. 21 1989

RCRA JOB DESCRIPTION

TITLE: Mechanical Technician II (M-6) — #027

A. Required Skills:

- Familiarity with State and Federal Regulations regarding hazardous materials and waste.
- Good technical knowledge of problems associated with high explosives (HE) handling and use.

B. Required Education/Training:

- RCRA Provisions
- Personal Safety
- Hazardous Waste Handling and Operations
  - a. Handling/Detonation HE waste
- M-6 Emergency Procedures
- Recordkeeping/Inspections
- On-Site Transportation

C. Duties

- Assemble and fire explosive shots.
- Assist firing point crew during shots.

APR. 21 1989

RCRA JOB DESCRIPTION

TITLE: Technical Supervisor III (M-7) — #029

A. Required Skills:

- Familiarity with State and Federal Regulations regarding hazardous materials and waste.
- Good technical knowledge of problems associated with high explosives (HE) handling and use along with M-7 HE fabrication operations.
- Familiarity with DOE and Laboratory Safety Regulations and M-7 Sops.

B. Required Education/Training:

- RCRA Provisions
- Personal Safety
- Hazardous Waste Handling and Operations
  - a. Handling of HE waste
- M-7 Emergency Procedures
- Recordkeeping/Inspections
- On-Site Transportation

C. Duties:

- Supervise HE fabrication technicians.
- Provide on-the-job training for explosives technicians.
- Responsible for maintenance of operational records.

APR. 21 1989

RCRA JOB DESCRIPTION

TITLE: Safety Officer (M-8) — #031

A. Required Skills:

- Familiarity with State and Federal Regulations regarding hazardous materials and waste.
- Knowledge of problems associated with high explosives (HE) handling and use.

B. Required Education/Training:

- RCRA Provisions
- Personal Safety
- Hazardous Waste Handling and Operations
  - a. Handling of HE waste
- M-8 Emergency Procedures
- Recordkeeping/Inspections
- Respirator or SCBA

C. Duties:

- Participate in writing SOPs for group operations.
- Maintains files of SOPs.
- Arranges Health and Safety Training for group personnel.
- Conducts necessary inspections of M-8 facilities.
- Assures group operations on compliance with Laboratory Health and Safety Manual.
- Assures group operations in accordance with approved SOPs.

APR. 21 1999

RCRA JOB DESCRIPTION

TITLE: Disposal Operations Materials Technician (WX-3) — #033

A. Required Skills:

- Familiarity with State and Federal Regulations regarding hazardous materials and waste.
- Good technical knowledge of problems associated with high explosives (HE) handling and disposal.
- Knowledge of specific group SOPs and procedures for disposal operations.
- Competence in disposal operations.

B. Required Education/Training:

Personnel assigned to the Disposal Crew are trained on the job. Most come to the job from other technical positions in WX-3 and are well grounded in explosives safety. They have knowledge of relevant SOPs, and their competence in the disposal operations is recorded by the Supervisor. They attend monthly meetings and participate in safety training.

- RCRA Provisions
- Personal Safety
- Hazardous Waste Handling and Operations
  - a. Detonation/Burning HE waste
- WX-3 Contingency Plan
- Recordkeeping/Inspections
- On-Site Transportation

C. Duties:

- Participates in the operations of a truck-mounted vacuum tank for the removal of sump waste.
- Prepares HE Waste for burning. Uses squibs and firing circuitry to start the burning operations.
- Responsible for preparing HE waste for burning.

APR. 21 1989

RCRA JOB DESCRIPTION

TITLE: Disposal Operations Supervisor (WX-3) — #034

A. Required Skills:

- Familiarity with State and Federal Regulations regarding hazardous materials and waste.
- Good technical knowledge of problems associated with high explosives (HE) handling and disposal.
- Thorough knowledge and understanding of specific group SOPs, safety manuals, and procedures for disposal operations.
- Directs activities of two technicians in the pickup, transportation, and disposal of HE contaminated flammable waste from all areas involving WX-3 operations and other Laboratory Groups.
- Responsible for the safety of all personnel engaged in disposal activities.
- Responsible for the training of personnel in the handling, transportation, and destroying of wastes, with emphasis on the precautions necessary for individual and crew protection.
- Schedules the activities to have all explosive or contaminated waste removed from facilities for disposal at the Burning Ground.
- Oversees sump cleaning activities to assure a safe, effective operation and inspects all sumps regularly.
- Understands and enforces security regulations concerning classified scrap.
- Responsible for the cleanliness and maintenance of all facilities and equipment involved in disposal activities.

B Required Education/Training:

The Disposal Supervisor must have a thorough understanding of the SOPs based on the procedures developed over decades of experience in handling, transporting, and using explosives at TA-16. He must also have a through understanding of the regulations stated in both the U.S. Army's Materials Development and Readiness Command Manual 385-100 and the DOE Safety Manual. The Supervisor is an individual promoted to this position based on his demonstrated experience and knowledge of disposal activities, explosives in general, and safety practices in explosive operations.

- RCRA Provisions
- Personal Safety
- Hazardous Waste Handling and Operations

  a. Detonation/Burning HE waste

APR. 21 1989

RCRA JOB DESCRIPTION

TITLE: Plant Engineering Specialist TEC IV (WX-12) — #035

A. Required Skills:

- Demonstrated technical and administrative proficiency in plant operation in maintenance.
- Good technical knowledge of problems associated with high explosives (HE) handling and disposal.

B. Required Education/Training:

- RCRA Provisions
- Spill Response/Contingency Plan
- Personal Safety
- Detonation/Burning HE
- Emergency Procedures
- Recordkeeping/Inspections
- On-Site Transportation

C. Duties:

- Investigate all proposed actions involving the physical plant and equipment to assure that the results will be compatible with the operational requirements and plant of the operating division.
- Track, monitor, and expedite operations involving contractor and off-site personnel that affect the area, buildings, facilities, and equipment.
- Serve as construction coordinator and maintenance inspector.
- Ensure that operations of contractor and off-site personnel are safe, compatible with existing facilities and operations, and minimize impact on the work of division personnel.
- Function as certifying agent, which involves inspection and testing for explosives contamination of items leaving the explosives area and many items to be transferred within the explosives area.

APR. 21 1989

RCRA JOB DESCRIPTION

TITLE: Certifying Agent (WX-12) — #036

A. Required Skills:

- Familiarity with State and Federal Regulations regarding hazardous materials and waste.
- Good technical knowledge of problems associated with high explosives (HE) handling and disposal.
- Knowledgeable of specific group SOPs and procedures for disposal operations.
- Competence in verification by visual inspection or application of appropriate tests that equipment or materials leaving TA-16 are free of explosives.
- Certifies equipment or materials for general use with no qualifications.

B. Required Education/Training:

The Certifier is trained on the job by senior personnel. Qualified Certifiers are senior technicians knowledgeable in explosives safety and explosives used in specific facilities.

Required Courses:

- RCRA Provisions
- Personal Safety
- Hazardous Waste Handling and Operations
  - a. Detonation/Burning HE Waste
- WX-12 Contingency Plan
- Recordkeeping/Inspections
- On-Site Transportation

C. Duties:

- Completely remove high explosives from contaminated equipment and materials. Certify the equipment and materials for general use with no qualifications.
- Responsible to supervisor for problems concerning efficiency, safety, and maintenance of the operation.

APR. 21 1989

RCRA JOB DESCRIPTION

TITLE: Emergency Responder — #038

A. Required Skills:

- Familiarity with State and Federal Regulations regarding hazardous materials and waste.
- Good technical knowledge of problems associated with hazardous chemical handling and use.
- Ability to communicate with wide variety of personnel, internal and external to Laboratory.
- Ability to supervise personnel in chemical waste emergency situation.

B. Required Education/Training:

- RCRA Provisions
- Spill Response
- Contingency Plan

C. Duties:

- To act as an emergency response coordinator in the event of a RCRA emergency situation.
- Maintain awareness of RCRA regulations with respect to local operations.

APR. 21 1989

RCRA JOB DESCRIPTION

TITLE: Chemical Waste Management Coordinator — #039

A. Required Skills:

- Knowledge of State and Federal Regulations regarding hazardous materials and waste.
- Knowledge of Laboratory requirements for hazardous material and waste management.
- Ability to instruct personnel in proper chemical waste management.

B. Required Education/Training:

- RCRA Provisions
- Spill Response
- Contingency Plan

C. Duties:

- Oversee local waste activities.
- Instruct fellow personnel in Laboratory waste disposal requirements.
- Provide input to spill responses for hazardous materials/waste as necessary.
- Maintain awareness of RCRA regulations with respect to local operations.

APR. 21 1989

RCRA JOB DESCRIPTION

TITLE: Staff Member, Technical Support Section (HSE-7) — #040

A. Required Skills:

- Familiarity with State and Federal Regulations regarding RCRA-listed hazardous materials.
- Good understanding of waste incinerator design and operation.
- Ability to train and supervise other Section members as required by operations.

B. Required Education/Training:

- Minimum of bachelor's degree in chemistry/chemical engineering or an equivalent combination of experience and engineering.
- RCRA Provisons
- Personal Safety
- Respirator or SCBA
- Hazardous Waste Handling and Operations

  a. Incineration
  b. Acids/Bases
  c. Organics - General
  d. Inorganics - General

- Spill Response
- RCRA Contingency Plan
- Recordkeeping/Inspections

C. Duties:

- Assist in training of Section staff and technicians in handling of hazardous wastes, incinerator operations, and data collection.
- Supervise handling of hazardous wastes as required by operations.
- Serve as shift supervisor during incinerator operations.
- Collect records of required run data.

APR. 21 1989

RCRA JOB DESCRIPTION

TITLE: High Explosive Technician (M-1) — #041

A. Required Skills:

- Familiarity with State and Federal Regulations regarding hazardous materials and waste.
- Good technical knowledge of problems associated with high explosives handling and use.

B. Required Education/Training:

- RCRA Provisons
- Personal Safety
- Detonation/burning HE
- Emergency procedures
- Record keepimg/inspection
- On-site transportation of explosives

C. Duties:

- Remove waste from satellite storage for disposal at TA-14 detonation/burning site.
- Small-scale sensitivity testing of explosives.
- Small-scale evaluation of explosives performance.

APR. 21 1989

RCRA JOB DESCRIPTION TABLE

NAME	NUMBER	TITLE	GROUP
	001	Group Leader, Waste Management	HSE-7
A. Drypolcher	002	Deputy Group Leader, Waste Management	HSE-7
A. Montoya	003	Section Leader, Chemical Waste Operations	HSE-7
J. Harper	004	Section Leader, Low Level Waste Operations	HSE-7
J. R. Buchholz	005	Section Leader, Liquid Waste Operations	HSE-7
L. C. Borduin	006	Section Leader, Technical Support Section	HSE-7
J. Vavruska	007	Lead Engineer, Technical Support Section	HSE-7
C. Warner	040	Staff Member, Technical Support Section	HSE-7
D. A. Hutchins	008	Staff Member, Technical Support Section	HSE-7
Vacancy	008	Staff Member, Technical Support Section	HSE-7
C. Fritz	009	Staff Member, Chemical Waste Operations	HSE-7
Vacancy	009	Staff Member, Chemical Waste Operations	HSE-7
Vacancy	009	Staff Member, Chemical Waste Operations	HSE-7
B. Myers	010	Staff Member, Liquid Waste Operations	HSE-7
S. Zygmunt	011	Staff Member, Technical Support	HSE-7
J. A. Mascarenas	012	Chemical Technician	HSE-7
T. S. Montoya, Supervisor	012	Chemical Technician	HSE-7
W. R. Velasquez	012	Chemical Technician	HSE-7
E. Velasquez	012	Chemical Technician	HSE-7
B. Romero	012	Chemical Technician	HSE-7
J. Gonzales	012	Chemical Technician	HSE-7
C. L. Gilley	013	Technician Liaison Specialist IV, Technical Support	HSE-7
D. Melton	014	Mechanical Technician, Technical Support	HSE-7
J. F. Rutten	014	Mechanical Technician, Technical Support	HSE-7
J. Mendez	015	Electronic Technician III, Technical Support	HSE-7

RCRA JOB DESCRIPTION TABLE CONTINUED

NAME	NUMBER	TITLE	GROUP
Vacancy	015	Electronic Technician III, Technical Support	HSE-7
L. Esquibel	016	Mechanical Technician II	HSE-7
L. Hupke	016	Mechanical Technician III	HSE-7
K. Carter	017	Experimental Equipment/Facilities Operator II/III (Area G)	HSE-7
A. Catanach	017	Experimental Equipment/Facilities Operator II/III (Area G)	HSE-7
C. Villareal	017	Experimental Equipment/Facilities Operator II/III (Area G)	HSE-7
Vacancy	017	Experimental Equipment/Facilities Operator II/III (Area G)	HSE-7
Vacancy	017	Experimental Equipment/Facilities Operator II/III (Area G)	HSE-7
D. Salazar	018	Experimental Equipment/Facilities Operator II/III (TA-50)	HSE-7
R. Reynolds	018	Experimental Equipment/Facilities Operator II/III (TA-50)	HSE-7
[illegible]. Royer	018	Experimental Equipment/Facilities Operator II/III (TA-50)	HSE-7
R. Harris	018	Experimental Equipment/Facilities Operator II/III (TA-50)	HSE-7
R. Ward	018	Experimental Equipment/Facilities Operator II/III (TA-50)	HSE-7
N. Garcia	019	Chemical Technician III/Laborer	PAWS
E. Montoya	019	Chemical Technician III/Laborer	PAWS
R. Garde	020	Section Leader, Decontamination & Decommissioning	HSE-7
M. Romero, Supervisor	021	Health Protection Technician II/III	HSE-7
M. Sanchez	021	Health Protection Technician II/III	HSE-7
K. Balo	022	Team Leader, Waste Generator Interface	HSE-7
P. Josey	022	Staff Member, Waste Generator Interface	HSE-7
Vacancy	022	Staff Member, Waste Generator Interface	HSE-7
F. M. Jackson	023	Technical Coordinator for Operations	M-DO
C. C. Bieri	041	High Explosive Technician	M-1
S. Hildner	024	Testing Technician III	M-1
C. C. Maxwell	025	Technical Administrative Specialist	M-1

RCRA JOB DESCRIPTION TABLE CONTINUED

NAME	NUMBER	TITLE	GROUP
A. D. Bonner	026	Remote Site Supervisor	M-6
D. T. Torres	027	Mechanical Technician II	M-6
W. Patterson	028	Technical Supervisor IV	M-7
S. Trujillo	029	Technical Supervisor III	M-7
L. W. Creamer	030	Group Safety Committee Chairman	M-7
C. M. Montoya	031	Safety Officer	M-8
C. M. Montoya	032	Firing Operations Supervisor	M-8
J. Maestas	033	Disposal Operations Material Technician	WX-3
S. Ortiz	033	Disposal Operations Material Technician	WX-3
J. Gallegos	033	Disposal Operations Material Technician	WX-3
K. Garcia	033	Disposal Operations Material Technician	WX-3
A. Montaño	033	Disposal Operations Material Technician	WX-3
P. Velarde	034	Disposal Operations Supervisor	WX-3
B. McCormick	035	Plant Engineering Specialist Technician IV	WX-12
B. McCormick	036	Certifying Agent	WX-12
J. Martinez	036	Certifying Agent	WX-12
D. Sharpless	037	Plant Engineering Specialist Technician IV	WX-12
J. Bacastow	038	Emergency Responder	HSE-3
W. C. Courtright	038	Emergency Responder	HSE-3
R. Goldie	038	Emergency Responder	HSE-3
P. Mahoney	038	Emergency Responder	HSE-3
C. Oliver	038	Emergency Responder	HSE-3
P. Schmidt	038	Emergency Responder	HSE-3
W. Atencio	038	Emergency Responder	HSE-5

RCRA JOB DESCRIPTION TABLE CONTINUED

NAME	NUMBER	TITLE	GROUP
F. Bolton	038	Emergency Responder	HSE-5
P. Girault	038	Emergency Responder	HSE-5
A. Hack	038	Emergency Responder	HSE-5
D. Macdonell	038	Emergency Responder	HSE-5
T. Moore	038	Emergency Responder	HSE-5
J. Robertson	038	Emergency Responder	HSE-5
G. Talley	038	Emergency Responder	HSE-5
D. Trujillo	038	Emergency Responder	HSE-5
E. Vigil	038	Emergency Responder	HSE-5
S. Vigil	038	Emergency Responder	HSE-5
[illegible] F. Weeks	038	Emergency Responder	HSE-5
L. Wheat	038	Emergency Responder	HSE-5
L. Woodrow	038	Emergency Responder	HSE-5
K. Balo	038	Emergency Responder	HSE-7
J. Buchholz	038	Emergency Responder	HSE-7
K. Carter	038	Emergency Responder	HSE-7
A. Catanach	038	Emergency Responder	HSE-7
A. Drypolcher	038	Emergency Responder	HSE-7
L. Esquibel	038	Emergency Responder	HSE-7
J. Gonzales	038	Emergency Responder	HSE-7
R. Harris	038	Emergency Responder	HSE-7
L. Hupke	038	Emergency Responder	HSE-7
[illegible]	038	Emergency Responder	HSE-7
J. Mascarenas	038	Emergency Responder	HSE-7

RCRA JOB DESCRIPTION TABLE CONTINUED

NAME	NUMBER	TITLE	GROUP
A. Montoya	038	Emergency Responder	HSE-7
T. S. Montoya	038	Emergency Responder	HSE-7
W. D. Moss	038	Emergency Responder	HSE-7
B. Myers	038	Emergency Responder	HSE-7
R. Reynolds	038	Emergency Responder	HSE-7
B. Romero	038	Emergency Responder	HSE-7
G. Royer	038	Emergency Responder	HSE-7
D. F. Salazar	038	Emergency Responder	HSE-7
W. M. Sanders	038	Emergency Responder	HSE-7
D. Vance	038	Emergency Responder	HSE-7
L. Velasquez	038	Emergency Responder	HSE-7
W. R. Velasquez	038	Emergency Responder	HSE-7
D. L. Volz	038	Emergency Responder	HSE-7
R. Ward	038	Emergency Responder	HSE-7
L. D. Williams	038	Emergency Responder	HSE-7
T. Buhl	038	Emergency Responder	HSE-8
B. Purtymun	038	Emergency Responder	HSE-8
L. Soholt	038	Emergency Responder	HSE-8
D. Van Etten	038	Emergency Responder	HSE-8
B. McCormick	038	Emergency Responder	WX-12
J. F. Griffin	038	Emergency Responder	EM
J. S. Griffiths	038	Emergency Responder	EM
Z. E. Macbain	038	Emergency Responder	EM
D. K. Winston	038	Emergency Responder	EM

RCRA JOB DESCRIPTION TABLE CONTINUED

NAME	NUMBER	TITLE	GROUP
M. Alexander	038	Emergency Responder	PAWS
M. Archuleta	038	Emergency Responder	PAWS
R. Atencio	038	Emergency Responder	PAWS
M. Bailey	038	Emergency Responder	PAWS
C. Barnett	038	Supervisor/Emergency Responder	PAWS
C. Chavez	038	Emergency Responder	PAWS
W. Chroninger	038	Emergency Responder	ENG-6
J. Cordova	038	Emergency Responder	PAWS
R. Danforth	038	Emergency Responder	PAWS
R. Defilipo	038	Emergency Responder	PAWS
r. J. Fitzgibbon	038	Supervisor/Emergency Responder	PAWS
N. Garcia	038	Emergency Responder	PAWS
S. Garcia	038	Emergency Responder	PAWS
D. Gonzales	038	Emergency Responder	PAWS
J. Graham	038	Emergency Responder	PAWS
G. Hillman	038	Emergency Responder	PAWS
T. Holm-Hansen	038	Supervisor/Emergency Responder	PAWS
A. Jackson	038	Emergency Responder	PAWS
J. Lopez	038	Emergency Responder	PAWS
B. Manzanares	038	Emergency Responder	PAWS
R. Martinez	038	Emergency Responder	PAWS
S. G. Martinez	038	Emergency Responder	PAWS
W. Meloy	038	Emergency Responder	PAWS
J. Merhege	038	Supervisor/Emergency Responder	PAWS

RCRA JOB DESCRIPTION TABLE CONTINUED

NAME	NUMBER	TITLE	GROUP
E. Montoya	038	Emergency Responder	PAWS
T. Montoya	038	Emergency Responder	PAWS
R. Ramsey	038	Emergency Responder	PAWS
A. Rodriquez	038	Emergency Responder	PAWS
M. Strosinski	038	Emergency Responder	PAWS
M. Talley	038	Emergency Responder	PAWS
S. Trujillo	038	Emergency Responder	PAWS
S. Alarid	038	Emergency Responder	DOE-FD
D. S. Archuleta	038	Emergency Responder	DOE-FD
H. V. Archuleta	038	Emergency Responder	DOE-FD
J. W. Boyet	038	Emergency Responder	DOE-FD
S. Branch	038	Emergency Responder	DOE-FD
J. Casaus	038	Emergency Responder	DOE-FD
A. C de Baca	038	Emergency Responder	DOE-FD
C. P. Chacon	038	Emergency Responder	DOE-FD
J. Chacon	038	Emergency Responder	DOE-FD
R. L. Chavez	038	Emergency Responder	DOE-FD
S. M. Coburn	038	Emergency Responder	DOE-FD
D. Davis	038	Emergency Responder	DOE-FD
J. S. Esparza	038	Emergency Responder	DOE-FD
D. E. Espinosa	038	Emergency Responder	DOE-FD
L. Espinosa	038	Emergency Responder	DOE-FD
D Esquibel	038	Emergency Responder	DOE-FD
R. Farris	038	Emergency Responder	DOE-FD

RCRA JOB DESCRIPTION TABLE CONTINUED

NAME	NUMBER	TITLE	GROUP
J. Fernandez	038	Emergency Responder	DOE-FD
B. R. Fresques	038	Emergency Responder	DOE-FD
C. Fresquez	038	Emergency Responder	DOE-FD
C. A. Gallegos	038	Emergency Responder	DOE-FD
M. Gallegos	038	Emergency Responder	DOE-FD
G. Garcia	038	Emergency Responder	DOE-FD
J. I. Garcia	038	Emergency Responder	DOE-FD
P. Garcia	038	Emergency Responder	DOE-FD
P. C. Garrison	038	Emergency Responder	DOE-FD
A. E. Giron	038	Emergency Responder	DOE-FD
... Goombi	038	Emergency Responder	DOE-FD
A. Gutierrez	038	Emergency Responder	DOE-FD
A. Harrand	038	Emergency Responder	DOE-FD
T. Heineman	038	Emergency Responder	DOE-FD
C. Hernandez	038	Emergency Responder	DOE-FD
L. D. Herrera	038	Emergency Responder	DOE-FD
P. R. Herrera	038	Emergency Responder	DOE-FD
M. V. Holley	038	Emergency Responder	DOE-FD
E. Kain	038	Emergency Responder	DOE-FD
J. C. Leal	038	Emergency Responder	DOE-FD
L. B. Lopez	038	Emergency Responder	DOE-FD
M. Lopez	038	Emergency Responder	DOE-FD
P. M. Lopez	038	Emergency Responder	DOE-FD
A. E. Lucero	038	Emergency Responder	DOE-FD

RCRA JOB DESCRIPTION TABLE CONTINUED

NAME	NUMBER	TITLE	GROUP
J. P. Lujan	038	Emergency Responder	DOE-FD
M. R. Lujan	038	Emergency Responder	DOE-FD
P. D. Lujan	038	Emergency Responder	DOE-FD
C. A. Lury	038	Emergency Responder	DOE-FD
J. H. Maestas	038	Emergency Responder	DOE-FD
J. O. Marquez	038	Emergency Responder	DOE-FD
A. B. Martinez	038	Emergency Responder	DOE-FD
A. J. Martinez	038	Emergency Responder	DOE-FD
E. Martinez	038	Emergency Responder	DOE-FD
E. W. Martinez	038	Emergency Responder	DOE-FD
. . J. Martinez	038	Emergency Responder	DOE-FD
R. A. Martinez	038	Emergency Responder	DOE-FD
R. L. Martinez	038	Emergency Responder	DOE-FD
R. R. Martinez	038	Emergency Responder	DOE-FD
R. C. Medina	038	Emergency Responder	DOE-FD
H. Mendez	038	Emergency Responder	DOE-FD
M. P. Montalvo	038	Emergency Responder	DOE-FD
T. N. D. Montoya	038	Emergency Responder	DOE-FD
P. Muller	038	Emergency Responder	DOE-FD
G. Naranjo	038	Emergency Responder	DOE-FD
J. P. Naranjo	038	Emergency Responder	DOE-FD
P. Neff	038	Emergency Responder	DOE-FD
D. T. Norris	038	Emergency Responder	DOE-FD
L. L. Norris	038	Emergency Responder	DOE-FD

RCRA JOB DESCRIPTION TABLE CONTINUED

NAME	NUMBER	TITLE	GROUP
S. Pollock	038	Emergency Responder	DOE-FD
M. L. Pullium	038	Emergency Responder	DOE-FD
J. L. Quintana	038	Emergency Responder	DOE-FD
R. Quintana	038	Emergency Responder	DOE-FD
J. Risley	038	Emergency Responder	DOE-FD
J. Rodarte	038	Emergency Responder	DOE-FD
Ed Rodriguez	038	Emergency Responder	DOE-FD
Ed Romero	038	Emergency Responder	DOE-FD
H. P. Romero	038	Emergency Responder	DOE-FD
P. A. Romero	038	Emergency Responder	DOE-FD
D. E. Roybal	038	Emergency Responder	DOE-FD
D. F. Roybal	038	Emergency Responder	DOE-FD
R. J. Roybal	038	Emergency Responder	DOE-FD
P. A. Sanchez	038	Emergency Responder	DOE-FD
G. Sandoval	038	Emergency Responder	DOE-FD
M. L. Serrano	038	Emergency Responder	DOE-FD
M. J. Sylvester	038	Emergency Responder	DOE-FD
J. Tapia	038	Emergency Responder	DOE-FD
P. J. Tapia	038	Emergency Responder	DOE-FD
B. F. Trujillo	038	Emergency Responder	DOE-FD
R. S. Velasquez	038	Emergency Responder	DOE-FD
D. E. Vigil	038	Emergency Responder	DOE-FD
J. Vigil	038	Emergency Responder	DOE-FD
M. Vigil (Capt.)	038	Emergency Responder	DOE-FD

RCRA JOB DESCRIPTION TABLE CONTINUED

NAME	NUMBER	TITLE	GROUP
M. Vigil	038	Emergency Responder	DOE-FD
N E. Vigil	038	Emergency Responder	DOE-FD
N. K. Vigil	038	Emergency Responder	DOE-FD
F. Jackson	039	Chemical Waste Coordinator	M-DO
M. Vigil	039	Chemical Waste Coordinator	M-1
C. Maxwell	039	Chemical Waste Coordinator	M-1
D. Griechen	039	Chemical Waste Coordinator	M-4
B. Olinger	039	Chemical Waste Coordinator	M-6
B. Powell	039	Chemical Waste Coordinator	M-7
Montoya	039	Chemical Waste Coordinator	M-8
R. Rabie	039	Chemical Waste Coordinator	M-9
M. Hollen	039	Chemical Waste Coordinator	MP-DO
D. Cochran	039	Chemical Waste Coordinator	MP-DO
J. Kleczka	039	Chemical Waste Coordinator	C-1
C. Blackwell	039	Chemical Waste Coordinator	CLS-DO
J. Dahlby	039	Chemical Waste Coordinator	CLS-1
M. Hoffbauer	039	Chemical Waste Coordinator	CLS-2
C. Sonntag	039	Chemical Waste Coordinator	CLS-3
W. Beattie	039	Chemical Waste Coordinator	CLS-4
K. Hosack	039	Chemical Waste Coordinator	CLS-5
D. Little	039	Chemical Waste Coordinator	CLS-6
J. Umphres	039	Chemical Waste Coordinator	CLS-7
Cutler	039	Chemical Waste Coordinator	CLS-8
J. Hansen	039	Chemical Waste Coordinator	N-DO

RCRA JOB DESCRIPTION TABLE CONTINUED

NAME	NUMBER	TITLE	GROUP
M. Mariner (Alt)	039	Chemical Waste Coordinator	N-DO
J. Martinez	039	Chemical Waste Coordinator	N-2
G. Weber	039	Chemical Waste Coordinator	IS-DOT
J. Halladay	039	Chemical Waste Coordinator	IS-9
L. Lucero	039	Chemical Waste Coordinator	IS-9
E. Salazar	039	Chemical Waste Coordinator	IS-9
O. Juveland	039	Chemical Waste Coordinator	IS-12
A. Dyson (Alt)	039	Chemical Waste Coordinator	IS-12
F. Brady	039	Chemical Waste Coordinator	MAT-14
P. Valerio (Alt)	039	Chemical Waste Coordinator	MAT-14
C. King	039	Chemical Waste Coordinator	P-DO
K. Joy	039	Chemical Waste Coordinator	ESS-DO
S. Helmick	039	Chemical Waste Coordinator	INC-DO
J. FitzPatrick	039	Chemical Waste Coordinator	INC-4
S. Kinkead	039	Chemical Waste Coordinator	INC-4
C. Longmire	039	Chemical Waste Coordinator	INC-11
M. Roybal (Alt)	039	Chemical Waste Coordinator	INC-11
F. Bolton	039	Chemical Waste Coordinator	MEC-DO
M. Lujan	039	Chemical Waste Coordinator	MEC-10
D. Heimbach	039	Chemical Waste Coordinator	IT-DO
C. Holman	039	Chemical Waste Coordinator	IT-6
R. Meade	039	Chemical Waste Coordinator	IT-7
N. Bowler	039	Chemical Waste Coordinator	IT-7
J. Martinez	039	Chemical Waste Coordinator	IT-7

APR. 21 1989

RCRA JOB DESCRIPTION TABLE CONTINUED

NAME	NUMBER	TITLE	GROUP
D. Green	039	Chemical Waste Coordinator	HSE-1
D. Volz	039	Chemical Waste Coordinator	HSE-7
M. Phillips	039	Chemical Waste Coordinator	HSE-9
D. Engstrom	039	Chemical Waste Coordinator	J-6
W. Bradley	039	Chemical Waste Coordinator	WX-DO
	039	Chemical Waste Coordinator	WX-3
W. May	039	Chemical Waste Coordinator	WX-3
M. Barr	039	Chemical Waste Coordinator	WX-3
R. Larson	039	Chemical Waste Coordinator	WX-5
C. Radosevich	039	Chemical Waste Coordinator	MST-3
W. Gibson	039	Chemical Waste Coordinator	MST-5
A. Herrera	039	Chemical Waste Coordinator	MST-5
J. Mitchell	039	Chemical Waste Coordinator	MST-4 / 6
J. Clements	039	Chemical Waste Coordinator	MST-7
R. Hermes	039	Chemical Waste Coordinator	MST-7
A. Hoyt	039	Chemical Waste Coordinator	MST-7
C. Foxx	039	Chemical Waste Coordinator	MST-12
D. Shapland	039	Chemical Waste Coordinator	MST-14
D. Shapland	039	Chemical Waste Coordinator	MST-DO
J. Valerio	039	Chemical Waste Coordinator	MEE-11
C. King	039	Chemical Waste Coordinator	LANCE/P
T. Holm-Hansen	039	Chemical Waste Coordinator	PAWS
D. Randolph	039	Chemical Waste Coordinator	CRMO

OUTLINE OF LOS ALAMOS NATIONAL LABORATORY'S TRAINING PROGRAM

IC - internal classroom instruction

EC - external classroom instruction

OJT - on-the-job training

I. RCRA PROVISIONS

A. Legislation (Federal/State) - (IC, EC) introductory with annual update.

Brief overview of legislative mandates.

B. Regulations (Federal/State) - introductory with annual update.
1. Overview of 40 CFR 260-265 (N.M. Hazardous Waste Regs. Parts I & II)
2. Overview of DOT shipping regulations
3. Familiarization with Los Alamos National Laboratory emergency response, record keeping.

II. PERSONNEL HEALTH AND SAFETY

A. Familiarization with Standard Operating Safety Guidelines (IC)

B. Safe Handling of Chemicals (EC)
1. Explosive/fire hazards, chemical burns, chemical compatibility
2. Eye/skin hazards and protection
3. Respiratory hazards and protection

C. First Aid (IC) introductory, triennial recertification

D. CPR (IC) introductory, annual recertification

E. Use of H&S equipment
1. Safety showers, eyewashers
2. Fire extinguishers
3. Alarm system
4. Communication system

III. RESPIRATOR

A. Air-Purifying Devices (IC) introductory, annual
1. Use
   a) Operation of device
   b) Changing filters
   c) Donning and taking off equipment
   d) Safety features
2. Care and cleaning

Figure C-1

3. Inspection
4. Fitting

B. Self-Contained Breathing Apparatus (IC) introductory, annual
1. Use:
   a) Operation of device
   b) Changing compressed air bottles
   c) Donning and taking off equipment
   d) Safety features
2. Care and cleaning
3. Inspection
4. Fitting

IV. HAZARDOUS WASTE HANDLING AND OPERATIONS

A. Batch Waste Treatment (OJT) introductory with annual update
1. Familiarization of SOP
2. Familiarizaton of Operating Manual
3. Supervised Operation of Facility
4. Emergency Shutdown Procedures
5. Evacuation Procedures
6. Accidental Release Procedure
7. Familiarization with Emergency Equipment Use, Inspection, Repair, etc.
8. Use of Communication/Alarm System

B. Controlled Air Incineration (OJT) introductory with annual update
1. Familiarization of SOP
2. Familiarization of Operating Manual
3. Supervised Operation of Facility
4. Emergency Shutdown Procedures
5. Evacuation Procedures
6. Accidental Release Procedure
7. Familiarization with Emergency Equipment Use, Inspection, Repair, etc.
8. Use of Communication/Alarm System

C. Detonation/Burning HE (OJT) introductory with annual update
1. Familiarization of SOP
2. Supervised Operation of Facility
3. Emergency/Evacuation Procedures
4. Accidental Release Procedures
5. Familiarization with Emergency Equipment Use, Inspection, Repair, etc.
6. Use of Communication/Alarm System

D. Non-HE Reactives, Corrosives, Ignitables, Toxics
   1. Chemical Hazards and Reactions (EC)
   2. Emergency Procedures (OJT)
   3. Accidental Release Procedures (OJT)
   4. Emergency Equipment
   5. Communication/Alarm System

V. RECORD KEEPING/INSPECTIONS (IC,EC,OJT) introductory

A. Use of Manifest System (on-site)

B. Operating Records

C. Reporting

D. Inspections
   1. Facility
   2. Operating Equipment
   3. Safety/Emergency Equipment
   4. Security System

VI. TRANSPORTATION (OJT) introductory

A. On-Site
   1. Packaging
   2. Placarding/labeling
   3. Manifesting/recordkeeping
   4. Internal Procedures
   5. Waste Segregation

B. Off-Site
   1. Packaging
   2. Placarding/labeling
   3. Manifesting/recordkeeping
   4. Internal Procedures
   5. Waste Segregation

Supervisors and staff receive training appropriate to their degree of handling hazardous waste (e.g., reporting and other procedures required for compliance). Material handlers are trained in the hands-on aspects such as maintenance of operating records, plant operation, and response to spills or other emergencies.

Figure C-1

CONTINGENCY PLAN

PERMIT ATTACHMENT D

NM0890010515-1

ATTACHMENT D
HAZARDOUS WASTE FACILITY CONTINGENCY PLAN

D.1 INTRODUCTION

The Los Alamos National Laboratory and the resident communities of Los Alamos and White Rock are located in north central New Mexico on the Pajarito Plateau, situated west of the Rio Grande on the eastern slopes of the Jemez Mountains. The Laboratory site covers about 111 km^2 (27,500 acres) in and adjacent to Los Alamos County and includes 32 active Technical Areas (TAs) (Figure D-1).

The principal mission of the Laboratory is the design and development of weapons for the nation's nuclear arsenal; however, considerable research and development (R&D) is directed toward the development of advanced technology. In executing its research mission, the Laboratory produces hazardous wastes in small quantities, the nature of which varies with changes in the research projects conducted. The potential exists for hazardous waste generation to occur at virtually all of the technical areas.

Overall responsibility for Hazardous Waste Management is with the HSE-7 Waste Management Group in the Health, Safety and Environment (HSE) Division (Figure D-2). Generators of hazardous wastes are responsible for proper identification, segregation, and documentation of their wastes. Except for HE wastes, packaging, transportation, and final disposition of hazardous wastes are the responsibility of HSE-7 Chemical Waste Operations.

HE wastes are handled by Dynamic Testing (M) and Design Engineering (WX) Division groups whose central purpose is the design and testing of explosives. Activities within HSE-7 include liquid waste treatment, hazardous chemical waste packaging, transport, treatment, and disposal.

The Laboratory maintains its own response forces to handle emergencies. Emergency resources available to the Laboratory include the Fire Department, the contracted services of the Mason-Hanger Protective Force (security), Pan Am World Services (PAWS) (maintenance), Los Alamos Medical Center, internal laboratory services including medical facilities, and minor external assistance from the Los Alamos County Police.

D.1.1 HAZARDOUS WASTES

The hazardous wastes generated by the Laboratory activities can be considered as three general types:

Wastes from research and development,
Wastes from process operations, and
High explosive wastes (HE).

In addition to the wastes noted above, various laboratory items that contain chemical residues or are otherwise chemically contaminated are considered hazardous waste.

D.1.2 HAZARDOUS WASTE UNITS

The safe handling, treatment, and/or storage of hazardous wastes is the responsibility of HSE-7. Daily operations involving hazardous wastes are performed by Solid Waste Operations. HE wastes are an exception, their treatment being the responsibility of M and WX Divisions. HSE-7 is only responsible for residuals from HE treatment when these residuals are determined to be hazardous wastes.

Hazardous Waste Units currently in operation are summarized in Table D-1. The locations of the units are shown as the shaded areas on Figure D-1. The flow plan for hazardous wastes within the Laboratory is shown in Figure D-3.

D.2 HAZARDOUS WASTE EMERGENCY RESPONSE RESOURCES

The Laboratory maintains its own response resources to handle emergencies. Interaction with outside agencies is limited for security reasons and because it is impractical to train these agencies to cope with the technical diversity of the Laboratory's operations such that they could safely contribute in an emergency. Response resources include personnel, emergency equipment, and communication systems.

D.2.1 Response Groups

The emergency response groups available to the Laboratory include the Fire Department, the contracted services of the Mason Hanger Protective Force (security), Pan Am World Services (PAWS) (maintenance), Los Alamos Medical Center, Internal Laboratory services including medical facilities, and minor external assistance from the Los Alamos County Police. The services offered by these response groups are itemized on Table D-2 and discussed briefly in the following. Each of the emergency response groups retains a current copy of the HWF Contingency Plan.

D.2.1.1 Medical Facilities

The Laboratory maintains its own medical facility, HSE-2 Occupational Medicine, to handle job-related injuries and to monitor employee health. Medical facilities include a staff of six physicians, two physician assistants, ten nurses, six x-ray technicians, and two laboratory technicians.

HSE-2 is supported by HSE-5, Industrial Hygiene. HSE-5 can provide exposure and treatment information via telephone access to Chemtrec and the National Library of Medicine, and via computer access to TOXLINE, CHEMLINE, and the Toxicity Data Bank.

Those cases which cannot be handled at HSE-2 would be forwarded to the Los Alamos County Hospital, where the Laboratory maintains a fully equipped decontamination room. The HSE-2 staff meets with the hospital's emergency staff monthly to go over procedures. In the event that a case is sent to the hospital, staff from HSE-2 provide assistance at the hospital.

D.2.1.2 HSE-3 Safety

HSE-3 reviews and approves fire protection procedures. They may assist in process shutdown and evacuation.

D.2.1.3 HSE-5 Industrial Hygiene

In addition to medical support, HSE-5 provides site field testing to determine the nature (nonradiological) and extent of contamination, provide information on correct handling of chemicals, and specify protective clothing and equipment.

D.2.1.4 HSE-7 Waste Management

Provides cleanup operations and proper treatment and disposal of hazardous materials and supervises emergency response operations. Since HSE-7 normally handles hazardous waste, the group is highly trained and equipped. This group represents the nucleus of the hazardous waste emergency response.

D.2.1.5 HSE-8 Environmental Surveillance

Provides field surveys of soils, water, air and biota to determine environmental effects of exposure. The group includes expertise in geohydrology and meteorology.

D.2.1.6 Fire Department

The Fire Department provides fire protection for the Laboratory as well as the communities of Los Alamos and White Rock. The department includes 98 personnel.

In the case of an emergency within the Laboratory, the Fire Department puts itself under the direction of the Laboratory response team.

The Fire Department personnel make regular tours of the Laboratory facilities to detect and discuss hazards associated with individual facilities and are instructed in hazardous material handling and emergency procedures. They are aware of the hazardous waste practices at the Laboratory, and are well equipped to handle any credible emergency situation.

D.2.1.7 Mason & Hanger Protective Force (Pro-Force)
The Pro-Force consists of more than 300 personnel who are responsible for Laboratory security. The security force is provided by Mason & Hanger, Silas Mason, under contract to the Laboratory.

During an emergency, the Pro-Force activities include maintenance of security, direction of traffic within the Laboratory, and control of access to the emergency site. The Pro-Force maintains the necessary equipment to perform these functions such as crowd control equipment, patrol cars, etc.

D.2.1.8 PAWS
PAWS provides a maintenance support force on contract to the Laboratory. This support force is under the Laboratory's direction in an emergency. PAWS conducts inspections of Laboratory equipment, maintains equipment, and participates in emergency cleanup.

D.2.1.9 Los Alamos County Police
In keeping with the principle of handling emergencies internally, the Los Alamos County Police have only a minimal interaction with the Laboratory in an emergency. That interaction is limited to traffic control on DOE roads with public access. The limits of interaction are included in a signed agreement, a copy of which is included as an attachment to this document. There are no agreements with other agencies.

D.2.1.10 WX and M Division Personnel
Personnel in WX and M Divisions are trained to safely handle and dispose of highly reactive materials (High Explosives). Any spill or uncontrolled release of material at the burning grounds (TA-14 and -16) or the detonation pads (TAs 14, 15, 36, and 39) will be cleaned up by personnel from these divisions. The Fire Department may be called to respond if a burn or detonation results in an uncontrolled fire.

D.2.1.11 Operational Management Group I (Emergency Management)

This group provides a 24-hour duty officer, called the Laboratory Emergency Duty Officer (LEDO), to respond to all credible emergencies, including hazardous materials releases. The LEDO is the On-Scene Commander (OSC) for all emergencies, including releases of hazardous materials when an On-Scene Control Group (OSCG) is formed. Emergency Management maintains the Emergency Operations Center (EOC) in operational ready status should the center be required.

D.2.2 Emergency Equipment

A list of emergency equipment for use at the Laboratory and the location of this equipment can be found in Table D-3. The equipment immediately available for use is located at TA-54, Area L, the TA-50 batch treatment system and modular container storage buildings, the TA-50 waste incinerator and Room 117 storage, the TA-16 incinerator, and the TA-50 storage pads.

In addition, PAWS, the Fire Department, and HSE-2 maintain emergency equipment. Major emergency facilities are shown in Figure D-4.

D.2.3 Communications

Effective emergency response at Los Alamos National Laboratory requires an efficient communication system which will integrate all personnel into the emergency response procedure.

There are two central alarm systems (CAS) at the Laboratory; an emergency CAS and a mechanical CAS. The emergency CAS is activated by:

Telephone communication (9-911)

Automatic fire alarms

Manual pull alarms

Computer interface (to warn of critical events or loss of confinement at selected facilities)

Break-in security

Radio communications

The emergency CAS is located in the central control room in Building 440 at TA-3. The control room is manned 24 hours a day and is equipped with telephones, medium and short range radios, direct line telephones, a National Warning System (NAWAS) station, and an emergency power system. The fire alarm board at the control room gives the location of automatic and pull fire alarms.

The maintenance CAS board, located in Building 223 at TA-3, is manned by PAWS personnel 24 hours a day. The maintenance CAS board interfaces with computers which monitor critical equipment throughout the Laboratory. Activation of an alarm triggers a call-out procedure to provide maintenance personnel and management supervision to correct the malfunction. The maintenance CAS does not directly trigger an emergency response.

Internal communication systems at the Laboratory include:

Centrex telephone system
Medium range radio nets (30-60 miles)
Limited range radio nets (3-10 miles)
Telephone/radio paging
Two-way hand held radios

Off-site communications with Federal, state, county and other agencies are maintained by the following:

Centrex telephone system
Private telephone lines (if Centrex fails)
Medium range radio nets (30-60 miles)
Limited range radio nets (3-10 miles)
Two National Warning System Stations (NAWAS)
Direct line to KRSN (local radio station)
Microwave telephone to Santa Fe Switchboard

All alarm systems and internal and external communication systems are available for use by all employees.

Activation of the emergency CAS automatically alerts the Fire Department, the Mason Hanger Pro-Force, and the CAS dispatcher. For hazardous waste emergencies, the CAS dispatcher notifies the ~~Emergency Preparedness Office Deputy Officer~~ (~~L~~ E/DO) who notifies upper management of the problem.
Laboratory Emergency Duty Officer
HSE-7 has access to all communications systems including a short wave radio base station located at TA-50-~~1~~. During normal working hours, communications to support response groups can be handled by HSE-7. During off hours, the ~~L~~ EDO uses the CAS Dispatcher to contact support groups.

D.3 NONSUDDEN RELEASES

Nonsudden releases include those incidences which, if uncontrolled, impact the environment over a long period of time. Such incidences include minor leaks of containers, loss of integrity of secondary containment, incomplete treatment, and leachate migration from disposal areas.

D.3.1 Responsibility

Correction of nonsudden release shall be the responsibility of the operating group and can be handled with normal maintenance and management procedures. Correction methods for nonsudden releases that have resulted in environmental contamination shall be coordinated with the New Mexico Environmental Improvement Division (NMEID).

D.3.2 Credible Nonsudden Releases

Not all failures can be predicted. In general, the response to nonsudden release will (1) contain the release, (2) correct the cause of the release, and (3) clean up any release to a level that protects health and the environment.

D.3.3 Nonsudden Release Surveillance

In addition to routine inspection and site-specific sampling and testing, the Laboratory maintains an area-wide environmental monitoring network maintained by HSE-8. Routine monitoring for radiation, radioactive materials, and chemical substances on the Laboratory site helps to fulfill the Laboratory's policy to protect the general public, employees, and the environment.

Monitoring and sampling locations for various types of measurements are organized into three main groups. Regional monitoring stations are located within the five counties surrounding Los Alamos County. They are placed up to 80 kilometers (50 miles) from the Laboratory, and serve to determine background conditions. Perimeter stations are located within approximately four kilometers (2.5 miles) of the Laboratory boundary, and document conditions in residential areas surrounding the Laboratory. On-site stations are within the Laboratory boundary, and most are accessible only to employees during work hours.

The types of routine surveillance conducted at these stations includes radiation measurements and collection of air particulates, waters, soils, sediments, and foodstuffs for subsequent analysis.

Additional samples are collected to gain information about particular events such as major runoff events and nonroutine releases. Data are used for comparison with standards, background radiation levels, and dose calculations.

D.4 SUDDEN RELEASES

This section deals with incidents involving sudden release such as spills, fires, or explosions which pose a significant threat to human health or the environment and includes the release of hazardous materials and hazardous wastes. Hazardous materials are chemical substances that become a regulated waste as the result of the incident and can include hazardous raw materials that are spilled, products of combustion, and products of uncontrolled reactions.

D.4.1 Hazardous Waste Emergency Coordination

LEDO The ~~EPODO~~ is responsible for coordinating all emergency response measures involving sudden releases of hazardous wastes with the exception of the open burning and open detonation units at TA-14, 15, 16, 36, and 39. HE waste handling is the responsibility of M and WX divisions, who have developed Standard Operating Procedures (SOPs) based on safe handling practices designed to eliminate the risk of fire and explosions. Unplanned detonation or combustion of HE renders the HE waste nontoxic. In some cases, residuals contain barium. Cleanup of barium contaminated areas due to unplanned detonations shall be coordinated with the LEDO.

The DO can be reached during working hours by contacting the Emergency Management office (7-6211) or the CAS Dispatcher during off hours (Table D-4).

The DO shall respond to all incidents involving the release of hazardous wastes including spills, fires, or explosions; assess the possible hazards to human health or the environment; and use whatever response group or emergency equipment needed to control and contain the wastes.

D.4.2 HWF Emergency Contingency Plan

This section defines the guideline used to initiate the HWF Emergency Contingency Plan and the resulting actions taken.

D.4.2.1 Guidelines for Implementation

The decision to implement the HWF Emergency Contingency Plan depends upon whether or not an imminent or actual incident could threaten human health or the environment. The following guidelines shall be used by the ~~EPODO~~ LEDO in making the decision whether or not to institute the HWF Emergency Contingency Plan.

The HWF Emergency Contingency Plan could be implemented in the following situations involving hazardous wastes or hazardous materials:

Spills

A hazardous waste or hazardous material spill cannot be contained with secondary containment or application of absorbents,

Precipitation threatens to move spilled material off site,

A hazardous waste or hazardous material spill causes the release of flammable material, creating a fire or explosion hazard,

A hazardous waste or hazardous material spill results in toxic fumes which threaten human health, or

An earthquake or other natural disaster threatens containment integrity.

A hazardous waste or hazardous mat. spill which threatens the security of a restricted area.

Explosions

An unplanned explosion involving hazardous wastes occurred (except at TA-14, 15, 16, 36, and 39), or

An imminent danger exists that an explosion involving hazardous wastes or hazardous material could occur.

Fires

Any fire involving hazardous wastes or hazardous material (except planned burning of HE waste), or

Any building, grass, forest, nonhazardous waste fire that threatens to ignite hazardous wastes.

D.4.2.2 Emergency Notification

Immediately upon discovery of an imminent or actual incident involving hazardous wastes or hazardous materials, the ~~EPODO~~ LEDO will be notified first. In the case of fire involving hazardous wastes or hazardous materials, this is superseded by the Laboratory fire alarm system. A fire is reported by dialing 9-911, activation of automatic alarms, or activation of a fire pull box. All fire alarms simultaneously alert the CAS Dispatcher, the Fire Department, and the Mason and Hanger Pro-Force. For fire involving hazardous wastes, hazardous materials, or hazardous waste units, the CAS Dispatcher shall contact the EPODO (Figure D-5). Orange 1 signs on buildings which contain HE are a warning to fire fighters not to approach or enter the building without obtaining information from WX or M Division personnel about the nature and location of HE materials in the building.

During off hours, all incidents involving hazardous wastes or hazardous materials shall be reported to the CAS Dispatcher, who will contact the on-call ~~EPODO~~ LEDO.

The ~~EPODO~~ LEDO shall proceed to the incident and assess the nature of the problem. On an as-needed basis, the ~~EPODO~~ LEDO shall contact response groups directly or instruct the CAS Dispatcher to contact them or contact the HSE-Duty Officer (HSE-DO) who will notify the appropriate HSE groups. Table D-2 shows the assistance available from each emergency response group. The ~~EPODO~~ LEDO will use this list as criteria to determine which groups to contact in an emergency.

Each response group maintains an on-call person and/or a call-down procedure to answer emergencies.

Because the initial observer may not be able to recognize the involvement of hazardous materials, the EPODO shall be notified of any incident as described in Section D.4.1. The EPODO shall use whatever means available including the assistance of other response groups, computer data searches, and sampling to determine if a hazardous waste is generated. HSE-5 and HSE-8 have the expertise to determine the nature and extent of contamination, the chemicals involved in the incident, and the characteristics of the hazardous waste.

D.4.2.3 EPODO Actions

Upon notification of an incident, the ~~EPODO~~ LEDO shall:

1. Proceed directly to the site;

2. Assess the nature of the incident, and quantities and types of hazardous wastes or hazardous materials involved; and

3. Based on the guidelines in Section D.4.2.1 of the Contingency Plan, determine if implementation of the HWF Emergency Contingency Plan is warranted.

Upon the decision to implement the HWF Emergency Contingency Plan, the ~~EPODO~~ LEDO shall perform, in this order, the following actions:

1. Assess the hazards to human health and the environment including both direct and indirect effects such as generation of toxic, irritating, or asphyxiating gases, hazards of runoff of fire water or treatment chemicals. The ~~EPODO~~ LEDO will use the guidelines in Section D.4.2.1 to assess the hazards to human health and the environment. If any of the criteria under Section D.4.2.1 are met, evacuation of the immediate area will be initiated.

2. Determine if evacuation of the local area is advisable, and if so, immediately notify appropriate response groups and/or the Los Alamos County Police.

3. Notify required response personnel and DOE ~~LACO~~ LAAO by phone, radio, or through the CAS Dispatcher in the case of a spill or incident other than fire. In the case of fire, since the fire fighters have already responded, he shall confirm that the Fire Department Officer-in-Charge is aware of the hazardous waste or hazardous materials involvement and the special hazards associated with the wastes.

4. Warn the remaining personnel of imminent or actual hazards using the radio and/or the PA system.

5. DOE ~~LACO~~ LAAO through the Emergency Management office will notify the New Mexico Environmental Improvement Division (505) 827-9329, and the National Response Center (800) 424-8802, reporting:

   - Name and telephone number of the reporter
   - Name and address of the facility
   - Time and type of incident
   - Name and quantity of materials involved, to the extent known
   - The extent of injuries, if any
   - The possible hazards to human health or the environment outside the facility

6. Advise the response groups as needed to minimize personnel exposure and expedite control; and

7. For the Batch Treatment Plant and Controlled Air Incinerator, where the emergency stops operations, HSE-7 personnel must monitor for leaks, pressure buildup, gas generation or equipment ruptures. The instruments that are monitored during shutdown and what they are monitored for are shown on Table D-5 for the Batch Treatment Plant and Table D-6 for the Incinerator.

Once control of the emergency is established, the ~~EPODO~~ LEDO shall:

1. Arrange for site cleanup

2. Provide for treating, storing, or disposing of recovered wastes, contaminated soil or contaminated surface waters

3. Provide for decontamination of equipment as needed

4. Replace and/or repair equipment as needed

5. Conduct testing as needed to verify successful cleanup

6. Within 15 days of the incident, submit to the Regional Administrator and Environmental Improvement Division the report described in Section D.10.

D.5 SPECIFIC EMERGENCY RESPONSE PROCEDURES FOR HAZARDOUS WASTE UNITS

The following section summarizes the guidelines for handling emergencies.

D.5.1 Chemical Spills

Hazardous wastes are handled and stored in small containers, lab packs, 55-gal. drums, and dumpster tanks. The individual volumes handled are small. Handling of hazardous materials may involve truckload quantities of material such as solvents, fuels, acids, and bases.

The general steps in handling hazardous wastes are:

Containment including spreading of absorbents or forming of temporary dikes,

Waste pickup and packaging in sound containers, and

Decontamination followed by testing to assure adequate clean-up.

The emergency preparedness procedures related to flammable organic solvent spills call for stabilization of the spilled material with the organic solvent spill kit. Other chemical spills are to be stabilized using the acid and caustic spill kits or by the addition of absorbents such as vermiculite. Personnel protective equipment will be worn during spill control and cleanup. The stabilized material will be treated as hazardous waste. Runoff which might occur from spills outside containment areas during precipitation must be contained and handled as a hazardous waste unless analyzed and found to be nonhazardous. Temporary dikes can be constructed to contain runoff.

D.5.1.1 Spill Control Procedures

Vermiculite or Pell-O-Cell will be used to control all chemical spills except hydrofluoric acid spills. Vermiculite and Pell-O-Cell are compatible with all chemicals except fluorine and hydrofluoric acid. Hydrofluoric acid is generally only handled in very small volumes, in small containers, so that a spill would be limited to a very small volume (less than 1 gallon). A hydrofluoric acid spill will be neutralized by carefully adding calcium hydroxide or other caustic to the spill. After an excess of caustic has been added and the reaction has ceased, the resulting solution will be cleaned up using vermiculite. Vermiculite and caustic are stored at all the TSD units at the Laboratory.

DOT approved drums will be used to collect all spilled material and contaminated absorbent. There are many drums of this type, located at all treatment and storage facilities at the laboratory. For corrosives, the drums will be lined with polyethylene drum liners. The list of emergency equipment (Table D-3) shows the equipment available at each area to be used to control a spill. The ultimate disposition of any contaminated absorbent or waste material will be decided by HSE-7 according to permit conditions and RCRA standards. The material will be temporarily stored at TA-54, Area L.

Decontamination will be accomplished at the spill site. After the spilled material has been absorbed by vermiculite or Pell-O-Cell, the material will be drummed. If the spill occurs on a cemented area, water or an appropriate solvent will be used to clean the area and this liquid will be adsorbed onto vermiculite or Pell-O-Cell and drummed.

A composite sample will be taken of the material used to adsorb the final waste water. No contamination should be present in this sample. If contamination is present, the procedure will be repeated (i.e., clean the area and collect and analyze a composite sample). The composite sample will be taken from a drum using a thief or trier as specified in SW-846.

If the spill occurs on soil, any free liquid present will be adsorbed onto vermiculite and the resulting material will be drummed. The contaminated soil will be dug up and drummed. For a spill of less than one gallon, the visibly contaminated dirt plus a sufficient amount of dirt around the spill site will be dug up. For a spill of more than one gallon, the contaminated dirt plus the perimeter dirt will be drummed and a sample taken of the perimeter dirt using the same method as discussed for the vermiculite sample.

There will be no sampling for a spill in a sealed storage area. Once all visible signs of contamination have been removed, it will be simple to verify any remaining contamination because the floors are sealed with epoxy. In addition, sealed storage areas have secondary containment structures that will control potential spills. At closure, if there is any residual contamination, it will be removed.

If a spill is from a known source, the waste will be analyzed for materials present in that container. Analytical procedures specified in Table D-7 will be used. If the spill is from an unknown source, the chemical composition will be determined by using the parameters and test methods specified in Table D-7.

D.5.2 Fire

Depending on the size of the fire and fuel source, portable ABC fire extinguishers may be used to put out fires. However, the Laboratory is discouraging the use of portable fire extinguishers by employees and encouraging the immediate evacuation and notification of the Fire Department. The person fighting the fire must wear appropriate protective equipment. If the fire spreads or increases in intensity, all personnel should evacuate to an upwind point at least 100 yards away from the fire. For any fire involving hazardous waste, the ~~EPODO~~ LEDO must be contacted immediately, and he will alert all necessary emergency management personnel. The Fire Department is automatically alerted when the CAS is activated. The ~~EPODO~~ LEDO should remain near the site, but at a safe distance, so he can advise the personnel responding to the fire of the known hazards. The ~~EPODO~~ LEDO is familiar with RCRA provisions, spill response, and emergency actions and therefore, is qualified to advise fire-fighting personnel of the potential hazards involved. Upon arrival at a fire, the Fire Department Officer-in-Charge will be in command of fire fighting. He will accept and evaluate the advice of Los Alamos personnel and emergency management organization members, but he will retain the responsibility to select the fire fighting methods and tactics. The ~~EPODO~~ will be in overall control of the Laboratory's emergency response efforts until the emergency is terminated. LEDO

D.5.3 Explosion

In the case of explosions, all personnel will immediately evacuate the area. LEDO Any injured personnel will be immediately transported to the Medical Department for treatment. The ~~EPODO~~ must be contacted immediately upon activation of the CAS, and then he must alert all necessary emergency response personnel. The Fire Department is notified automatically upon CAS activation. The ~~EPODO~~ LEDO will remain near the site, but at a safe distance, so he can advise the personnel responding to the explosion of the known hazards.

Upon arrival at the site, the Fire Department Officer-in-Charge will be in command of fire fighting. He will accept and evaluate the advice of Los Alamos personnel and emergency management organization members, but he retains the responsibility to select the fire fighting methods and tactics. The ~~EPODO~~ LEDO will be in overall control of the Laboratory's emergency response efforts until the emergency is terminated.

D.5.4 Exposure

Chemical material in the eye or on the skin will be washed either with the entire contents of the portable eye wash station or for at least 15 minutes. The eyelids will be held open during washing. The injured person will then be quickly transported to the Medical Department for evaluation. If possible, the chemical material involved in the injury will be ascertained and the information given to the Medical Department.

Other potential chemical exposures will necessitate evacuation if anyone notices any of the following conditions:

- Irritation of the eyes, breathing passages or skin,
- Difficulty in breathing, or
- Nausea, light-headedness, vertigo, or blurred vision.

The affected person will be transferred to the Medical Department and the HSE-5 Group representative will attempt to ascertain what, if any, chemical exposure occurred and what corrective measure is appropriate.

D.5.5 Flood

The U.S. Army Corps of Engineers has documented that Los Alamos National Laboratory's waste management facilities are not located within the 100-year floodplain. This documentation has been included as an attachment to this document.

D.6 EVACUATION

A facility will be evacuated upon the voice command of "evacuate the area," or upon the sounding of the evacuation alarm, or upon the fire alarm.

D.6.1 Evacuation Plan

Emergency situations may warrant the shutdown and evacuation of an area(s) or building(s) in order to protect personnel and property, to anticipate the emergency condition, or to enhance the appropriate response. Table D-8 shows the criteria for evacuation, persons responsible for initiating evacuations, and reentry conditions.

To initiate building evacuation, the evacuation alarm is sounded and/or the public address system is used. The evacuation alarm, which is more suitable for evacuation of the whole facility, is a steady, continuous, audible signal. This alarm cannot be silenced and reset by site personnel. The Fire Alarm Maintenance Section at 667-4027 and the Fire Department Platoon Chief at 667-7026 can silence and reset the alarm.

To evacuate a portion of the building, the public address system is more appropriate. The PA system will notify the occupants of the area to be evacuated, and additionally, will advise personnel in the rest of the facility of the existence of a problem in that specific area.

Upon initiation of an evacuation, either via the PA or evacuation alarm, all personnel are to leave the specified area and go to the muster area, turning off all equipment that could contribute to the hazard if left unattended.

In the event of an evacuation of only a portion of the building, one of the out buildings, or outlying work areas, the Group Leader will designate a control point at the closest and/or the most convenient location. This area will be outside the affected area and will serve as a muster point and provide control of the affected area to prevent further spread of the hazard.

Sweep Team personnel will remain in the area for a visual inspection of all the affected work areas, laboratories, and offices. At least two persons will do the sweep to insure that if an injured person is found or if a single person is fighting a small fire, turning off equipment or activating fire suppression systems, one sweep team member can give assistance while the other reports to the muster area or control point to obtain additional aid.

If the building is evacuated during normal working hours, the secretary will remove the personnel attendance roster that is posted near the secretary's desk, take it to the muster area, call roll, and report the personnel accounting to the Group Leader. During second or third shift operations, the lead engineer will be responsible for evacuation and roll call. The evacuation procedure follows:

- Group Leader determines cause and probable extent of hazard.

- Group Leader will sound the evacuation alarm or make an announcement on the PA system.

- Group Leader will designate an assembly area if other than muster area.

- Group Leader will notify the on-call ~~EPODO~~ LEDO.

- Personnel will shut down equipment that might contribute to the hazard.

- Personnel will activate fire suppression systems.

- Personnel will not remain in affected area except to assist injured personnel.

- Personnel will report to the muster area or designated control point.

- Roll call (general evacuation) or personnel accounting (partial evacuation).

- Building or Area sweep by assigned personnel.

For a small scale evacuation, the Group Leader takes control. For a large-scale evacuation, the CAS will be activated, the ~~EPODO~~ LEDO will be notified and will be responsible for the evacuation.

D.6.2 Process Shutdown

Personnel are instructed to shut down equipment prior to evacuating a building unless an immediate building evacuation is announced. To ensure efficient shutdown, training and exercises in process shutdown are required. In the case of an immediate evacuation, a selected team may shutdown designated equipment in an evacuated area. The team will be equipped with the proper equipment, clothing and breathing apparatus. If present, HSE-1, HSE-3, and HSE-5 will provide advice and assistance. Process shutdown procedures only apply to the TA-50 batch treatment system and waste incinerator and the TA-16 Industrial Incinerator. Process shutdown procedures are as follows.

D.6.2.1 TA-50 Batch Treatment System

The Batch Treatment System will be operated in accordance with current Standard Operating Procedures. If a fire or evacuation alarm sounds during the operation of the Batch Treatment System, the operating crew will initiate a process shutdown. Because the process is a batch treatment, cessation of treatment is adequate to bring the process to a safe condition. In general, the process shutdown should include the following:

- Shutdown of treatment chemical feeds,

- Shutdown of the waste pump discontinuing waste transfer or circulation,

- Shutdown of steam/hot water to the reactor jacket, if any,

- Shutdown cooling water only if there is a risk of contamination of the water with waste (continued cooling removes residual heat from the system), and

Allow the reactor mixer to operate unless its operation poses a unique hazard (operation helps remove heat and prevents stratification).

D.6.2.2 TA-50 Waste Incinerator

If a fire or evacuation alarm sounds during the operation of the controlled air incineration process, the operating crew will initiate a process shutdown in accordance with the current operating instructions. Three logic sequences are provided to shut down the process in a safe and orderly manner.

Controlled Shutdown - initiated when there is potential for significant damage to minor process components. This is also the normal shutdown mode at the completion of a run. When controlled shutdown is initiated, feeding of waste to the incinerator is stopped and a programmable set-point generator is activated that directs remote set-point inputs to the temperature controllers, causing a gradual decrease in chamber temperatures. Switches internal to the set-point generator cause an orderly-timed shutdown of process components.

Fast Shutdown - initiated for conditions that could likely result in loss of containment or damage to major process components. Waste feeding is stopped. Following a two-minute timed interval following the last feeding of solid waste (immediate, if feeding liquid waste), the upper and lower chamber burners are shut down and the system valves and dampers are positioned so as to maintain a negative pressure in the system while minimizing flow through the system. Snuffing steam is introduced into the lower chamber. The two-minute delay when feeding solid waste allows for the ignition of pyrolitic gases formed immediately after feeding.

Scram Shutdown - initiated at the discretion of an operator. The chain of events are identical to the fast shutdown except that the sequence is not delayed when feeding solid waste. Scram buttons are located at the incinerator and in the control room.

The last two shutdown modes are potentially destructive to the incinerator refractory and are initiated only when the consequences of not shutting down are greater than the consequences to the incinerator during a scram or fast shutdown. It is the responsibility of the operating personnel and the process lead engineer to assess any situation and initiate the proper process shutdown sequence.

D.6.2.3 TA-16 Industrial Incinerator

If a fire or evacuation alarm sounds during the operation of the TA-16 Industrial Incinerator, the operating crew will initiate a process shutdown. The TA-16 incinerator is equipped with automatic and manual controls for shutdown of burners. Burners may be shut down manually by tripping a single switch. Automatic shutdown of the burners will occur on occurrence of a power failure, limit failure, or flame failure.

D.7 SALVAGE AND CLEANUP

The affected area will be surveyed by appropriate representatives from HSE Groups before salvage, cleanup and return to normal operations. Visual inspections of the affected area will be supplemented by sampling to determine whether cleanup is complete. After determination of any existing hazards from toxic or hazardous gases or fumes, electrical hazards, or other unsafe conditions, personnel or selected teams, equipped with proper breathing apparatus and protective clothing, will reenter the area to perform designated tasks to affect decontamination, repairs, and salvage to allow the return to normal operations. After an emergency, the EPODO will:

Provide for treating, storing, or disposing of recovered waste, contaminated soil or surface water, or any other material that results from a release, fire, or explosion. Contaminated material will be treated as a hazardous waste and temporarily stored at one of the permitted hazardous waste storage areas at the laboratory. HSE-7 will be responsible for determining the final disposition of the waste. This determination will be made in compliance with the permit and RCRA standards.

Remain at the site to ensure that no waste that may be incompatible with the released material is treated, stored, or disposed of until cleanup procedures are completed.

Ensure that emergency equipment is cleaned and fit for its intended use before operations are resumed. Equipment will be visually inspected and sampled to determine the type and degree of contamination and appropriate cleanup measures will be used.

Prior to resuming operations, appropriate local authorities will be notified that cleanup procedures are completed and emergency equipment is cleaned and fit for its intended use.

Damage assessment and recovery shall be performed within the reporting and investigative requirements of DOE Order 5484.1. The ~~EPODO~~ LEDO has general responsibility for coordinating post-emergency actions, particularly during the time period immediately after the emergency. Such actions include cleanup operations, repair of vital equipment, or interim hazard-removing operations (such as demolition of unstable walls). The services of the affected operational organizations, HSE Division, the PAWS, and other on-site talent will also be utilized to estimate cleanup costs and operational impact. The ~~EPODO~~ LEDO declares the end of the emergency; an Incident Report is filled out, and the Group Leader and his staff review emergency actions.

D.8 POST-EMERGENCY ASSESSMENT

When the emergency is over, the causes of the emergency and the effectiveness of the response are investigated, in order that future emergencies may either be prevented, or that the response to them may be more effective. Following each event requiring the implementation of the HWF Contingency Plan, the ~~EPODO~~ LEDO shall meet with representatives of all response functions to determine the adequacy of the response.

D.9 EMERGENCY RECORDS

The details of any incident that requires implementation of the HWF Emergency Contingency Plan must be noted in that unit's log book. This record must include the time, date, and full description of the incident.

D.7 SALVAGE AND CLEANUP

The affected area will be surveyed by appropriate representatives from HSE Groups before salvage, cleanup and return to normal operations. Visual inspections of the affected area will be supplemented by sampling to determine whether cleanup is complete. After determination of any existing hazards from toxic or hazardous gases or fumes, electrical hazards, or other unsafe conditions, personnel or selected teams, equipped with proper breathing apparatus and protective clothing, will reenter the area to perform designated tasks to affect decontamination, repairs, and salvage to allow the return to normal operations. After an emergency, the ~~EPODO~~ LEDO will:

Provide for treating, storing, or disposing of recovered waste, contaminated soil or surface water, or any other material that results from a release, fire, or explosion. Contaminated material will be treated as a hazardous waste and temporarily stored at one of the permitted hazardous waste storage areas at the laboratory. HSE-7 will be responsible for determining the final disposition of the waste. This determination will be made in compliance with the permit and RCRA standards.

Remain at the site to ensure that no waste that may be incompatible with the released material is treated, stored, or disposed of until cleanup procedures are completed.

Ensure that emergency equipment is cleaned and fit for its intended use before operations are resumed. Equipment will be visually inspected and sampled to determine the type and degree of contamination and appropriate cleanup measures will be used.

Prior to resuming operations, appropriate local authorities will be notified that cleanup procedures are completed and emergency equipment is cleaned and fit for its intended use.

Damage assessment and recovery shall be performed within the reporting and investigative requirements of DOE Order 5484.1. The ~~EPODO~~ LEDO has general responsibility for coordinating post-emergency actions, particularly during the time period immediately after the emergency. Such actions include cleanup operations, repair of vital equipment, or interim hazard-removing operations (such as demolition of unstable walls). The services of the affected operational organizations, HSE Division, the PAWS, and other on-site talent will also be utilized to estimate cleanup costs and operational impact. The ~~EPODO~~ LEDO declares the end of the emergency; an Incident Report is filled out, and the Group Leader and his staff review emergency actions.

D.8 POST-EMERGENCY ASSESSMENT

When the emergency is over, the causes of the emergency and the effectiveness of the response are investigated, in order that future emergencies may either be prevented, or that the response to them may be more effective. Following each event requiring the implementation of the HWF Contingency Plan, the ~~EPODO~~ LEDO shall meet with representatives of all response functions to determine the adequacy of the response.

D.9 EMERGENCY RECORDS

The details of any incident that requires implementation of the HWF Emergency Contingency Plan must be noted in that unit's log book. This record must include the time, date, and full description of the incident.

D.10 EMERGENCY REPORTS

Any emergency that requires implementation of the HWF Emergency Contingency Plan will be reported in writing within 15 days to the EPA Regional Administrator and to the New Mexico Environmental Improvement Division (EID).

The report shall include the following data:

Name, address, and phone number of owner or operator

Name, address and phone number of the facility

Date, time, and type of incident (e.g. fire, explosion, spill)

Name of material involved

Quantity of material involved

Extent of injuries (if any)

Assessment of actual or potential hazards to human health or the environment

Estimated quantity and disposition of material recovered from the incident

D.11 CONTINGENCY PLAN AMENDMENT

The Contingency Plan shall be reviewed by ~~EPODO~~ LEDO, HSE-7, and HSE-8 and immediately amended if determined to be inadequate to handle nonsudden and sudden releases, and whenever:

The HWF permit is revised

There is significant change in the design or operation of the HWF (i.e., waste quantities handled, handling techniques, or final disposition)

The list of emergency coordinators changes

The list of emergency equipment significantly changes

Operating experience, drills, or technical review demonstrates the plan is inappropriate

Actual implementation of the plan demonstrates inadequacies

The Contingency Plan shall have a cover sheet noting the date of the last amendment. Amendments shall be issued to all HWF Contingency Plan holders and shall include a cover letter that describes the plan changes and rationale for those changes.

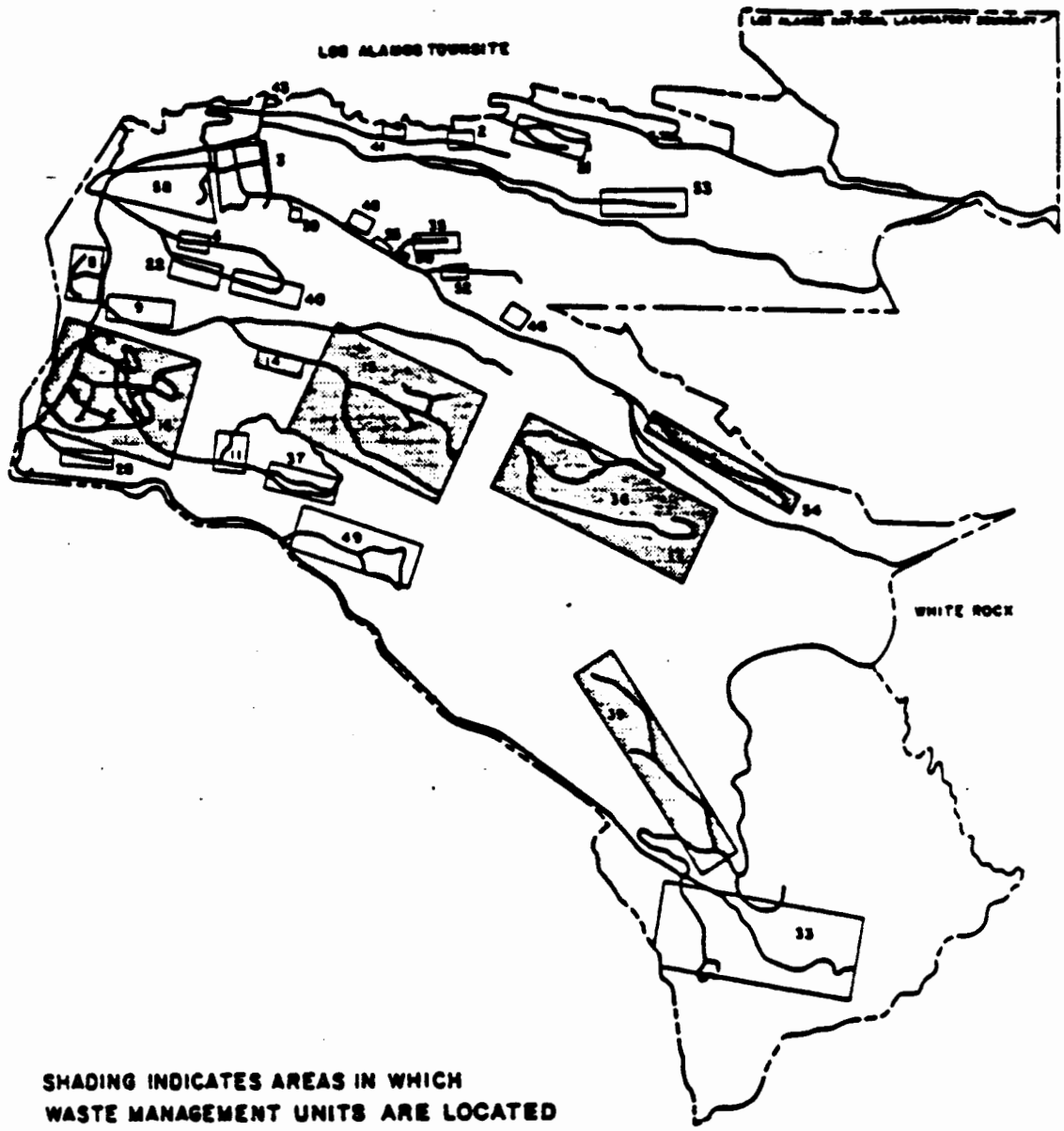

SHADING INDICATES AREAS IN WHICH WASTE MANAGEMENT UNITS ARE LOCATED

4000 0 4000

SCALE

Figure D-1

LOS ALAMOS TECHNICAL AREAS

PREPARED FOR

LOS ALAMOS NATIONAL LABORATORY LOS ALAMOS, NEW MEXICO

INTERNATIONAL TECHNOLOGY CORPORATION

DRAWN BY	KCT 10/11/88	CHECKED BY		DRAWING NUMBER 301215 02 00 A0
		APPROVED BY		

© 1984 IT CORPORATION
ALL COPYRIGHTS RESERVED

Do Not Scale This Drawing

NM0890010515-1

NM0890010515-1

HEALTH, SAFETY, AND ENVIRONMENT DIVISION
LOS ALAMOS NATIONAL LABORATORY

March 21, 1989

Total Staff: 472.80
SM: 186.52
Support: 286.28

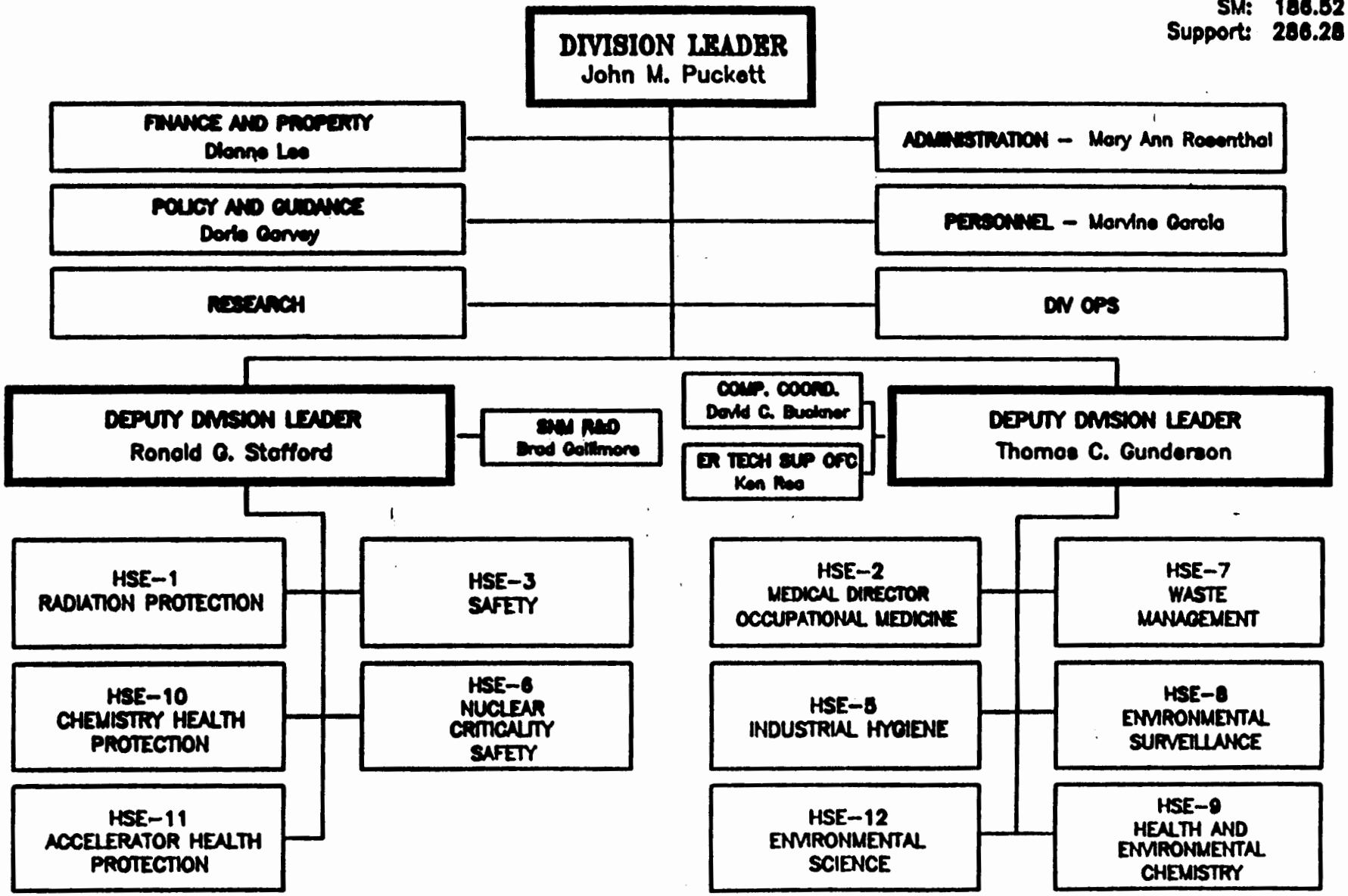

Figure D-2 Health, Safety, and Environment Division Organization Chart

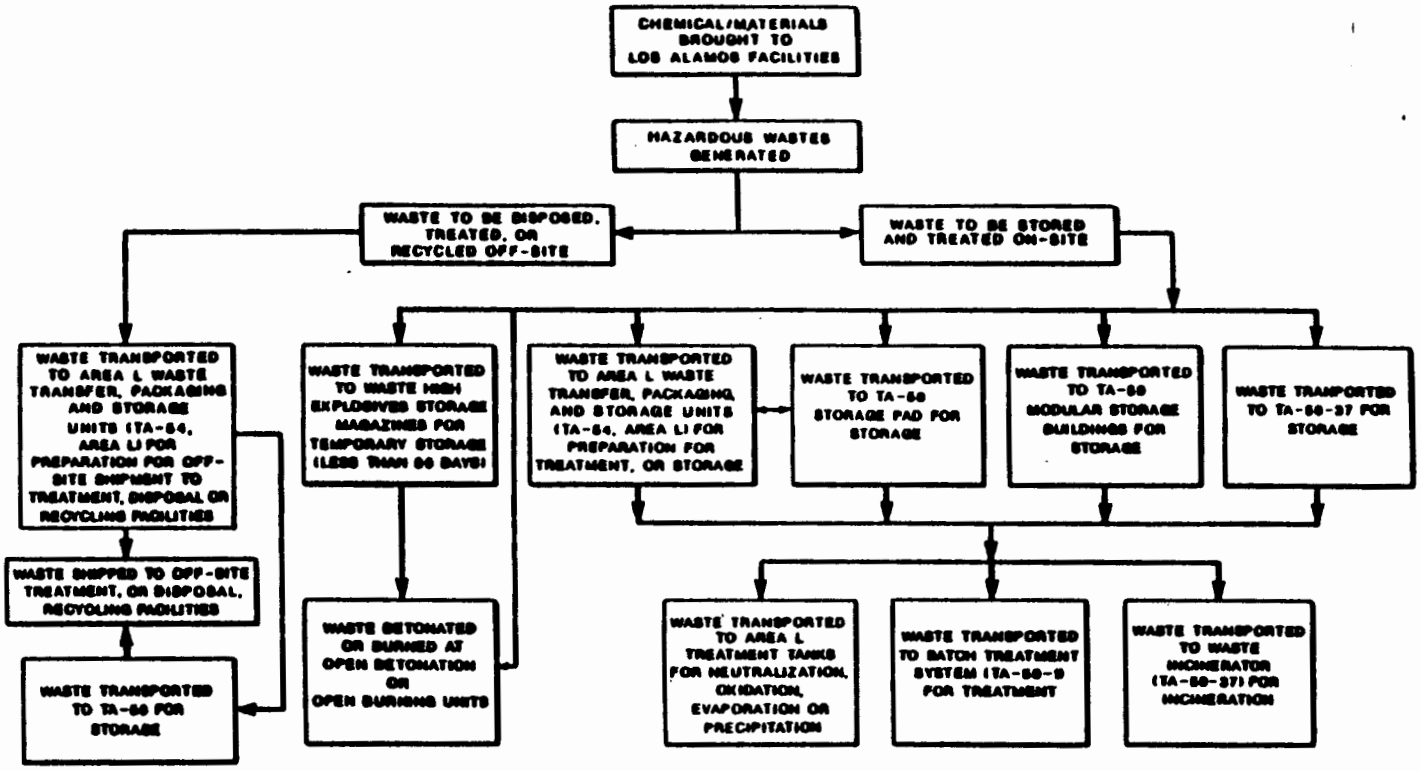

Figure D-3

SCHEMATIC DIAGRAM OF LOS ALAMOS HAZARDOUS WASTE MANAGEMENT ACTIVITIES

PREPARED FOR

LOS ALAMOS NATIONAL LABORATORY

LOS ALAMOS, NEW MEXICO

© 1984 IT CORPORATION
ALL COPYRIGHTS RESERVED
Do Not Scale This Drawing

IT ... Creating a Safer Tomorrow

NM0890010515-1

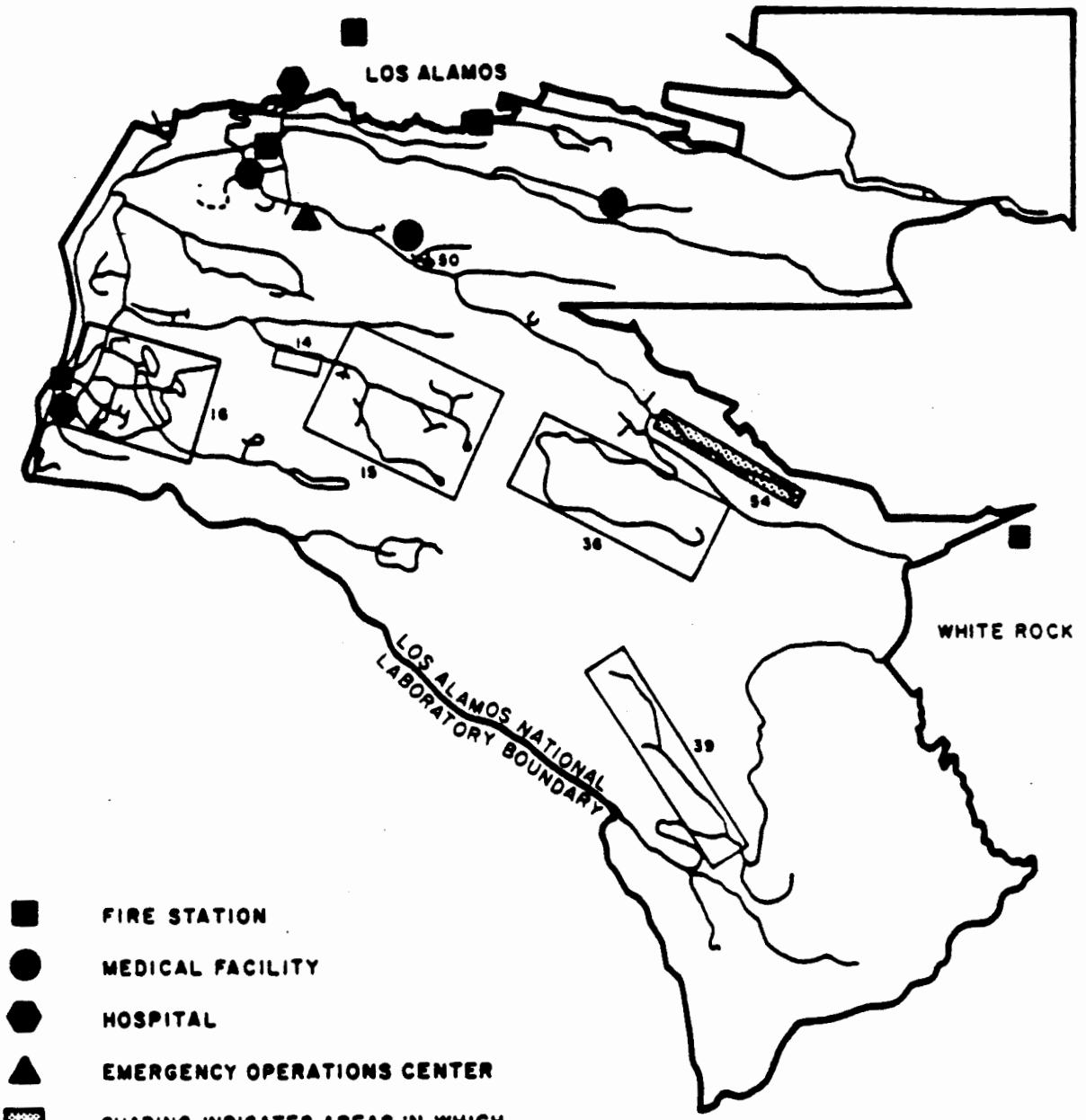

Figure D-4

EMERGENCY FACILITIES

PREPARED FOR

LOS ALAMOS NATIONAL LABORATORY
LOS ALAMOS, NEW MEXICO

IT CORPORATION

WN BY	LLF 11/10/87	CHECKED BY		11/4/87	DRAWING NUMBER 301017-02 A105
		APPROVED BY			

10 1333 HERCULENE. ADD SMITH CO., PGH., PA L71530-1079

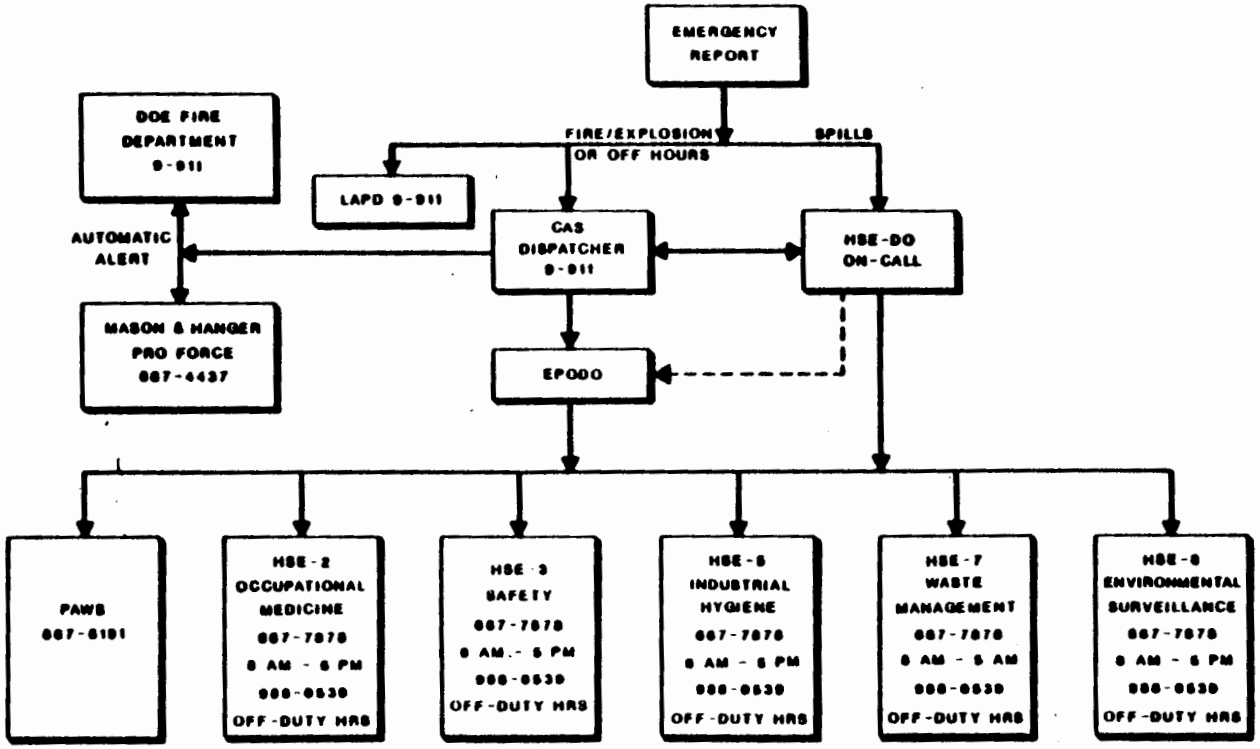

Figure D-5
HAZARDOUS WASTE
EMERGENCY
NOTIFICATION STRUCTURE
PREPARED FOR

LOS ALAMOS NATIONAL LABORATORY
LOS ALAMOS, NEW MEXICO

NM0890010515-1

Table D-1

SUMMARY OF HAZARDOUS WASTE UNITS
LOS ALAMOS NATIONAL LABORATORY

Technical Area and Building or Area Designation	Wastes Handled	Activity Description
TA-14, 15, 16, 36, and 39	High explosives (HE)	Open burning/open detonation units used to react waste HE and HE-contaminated material
TA-50-01	Electrochemistry wastes Isotope separation wastes	Chemical batch treatment by neutralization, metal precipitation, and cyanide destruction
TA-50 Modular Storage Units	Shops department wastes Wastes from Basic and Applied Chemistry R&D programs Electrochemistry wastes Isotope separation wastes	Storage of wastes prior to treatment, incineration
TA-50-37	Combustible liquids and solids, including chlorinated and fluorinated hydrocarbons, and carcinogenic materials	Waste incineration with flue gas treatment
TA-50-37 Room 117 Storage Area	Combustible liquids and solids, including chlorinated and fluorinated hydrocarbons, and carcinogenic materials	Storage/Staging area for incinerator
TA-50 Storage Pads	Shops department wastes Wastes from Basic and Applied Chemistry R&D programs	Waste storage prior to treatment, incineration, or shipment off-site
TA-54 Area L	Shops department wastes Wastes from Basic and Applied Chemistry R&D programs	Wastes are segregated and stored prior to treatment, incineration, recycling, or shipment off-site

TABLE D-2
HAZARDOUS WASTE EMERGENCY RESPONSE GROUPS

Laboratory Controlled Response Group	Emergency Telephone	Assistance Available
HSE-2 Occupational Medicine	667-7878 (8 am - 5 pm) 988-0539 off-duty hours	Emergency medical treatment
HSE-3 Safety		Reviews and approves fire protection procedures. May assist in process shutdown and evacuation
HSE-5 Industrial Hygiene		Site evaluation - field testing to determine the nature and extent of contamination (nonradiological)
		Specify protective clothing and equipment
		Information services regarding hazards of wastes and treatment for exposur
HSE-7 Waste Management		Hazardous waste cleanup, handling, treatment, and disposal
HSE-8 Environmental Surveillance		Field surveys to determin spread of contamination and adequacy of clean up
		Meterological information
		Geohydrologic support
HSE-9 Health and Environmental Chemistry		Chemical analytical services
Fire Department	9-911	Firefighting personnel an equipment
		Ambulance and paramedic service
Mason & Hanger Protective Force (Pro Force)	667-4437	Traffic Control
		Security
Emergency Management Group	667-6211 (8am - 5pm) 667-7080 (off-Duty Offices)	24-hour Duty Officer (LEDC On-scene Command and Control, Required Reporting Procedures and Operation Critiqu

TABLE D-2
(Continued)

Laboratory Controlled Response Group	Emergency Telephone	Assistance Available
Pan Am World Services	667-6196	Maintenance personnel and equipment
Non-Laboratory Controlled		
Los Alamos County Police	662-4176	Traffic control on DOE roads with public access
Los Alamos Medical Center*	662-4201	Medical Services

*Medical services related to hazardous wastes injuries provided under the direction of HSE-2.

TABLE D-3
(Continued)

EMERGENCY EQUIPMENT AT THE BURNING GROUND AND
THE OPEN DETONATION PADS, TAs 14, 15, 16, 36, AND 39

Fire Control Equipment

Fire Extinguisher in each vehicle used to transport HE material
Fire Extinguisher in each control bunker

Description of General Capabilities

These are portable units of approximately 9 to 15 pounds capacity used in wet chemical laboratory applications. May be used by any employee in case of a fire. Fire extinguishers are never used to put out controlled fires at the burning grounds.

Communication Equipment

Telephones
Two-way radios

Description of General Capabilities

Telephones for internal communication at teh Laboratory and off-site communication with federal, state, county, and other agencies are available. A Centrex telephone system and a private telephone line (if Centrex fails) are available for use by all employees.

Located in each control bunker, in the control building at the burning ground, and at the waste wataer treatment facility at the burning ground. Radios allow communication between each vehicle.

TABLE D-3

EMERGENCY EQUIPMENT

EMERGENCY EQUIPMENT AT THE TA-50 BATCH WASTE TREATMENT UNIT (BWTR)

Fire Control Equipment:

2 fire extinguishers (B,C)

Description of General Capabilities:
These are portable units of approximately 9 to 15 pounds capacity used in wet chemical laboratory applications. May be used by any employee in the event of fire.

East wall of Batch Waste Treatment Room (BWTR)
West wall of adjoining room (Rm. 24) to west of BWTR

Fire alarm pull box

Description of General Capabilities:
Manually operated fire alarm which may be activated by any employee in the event of fire to notify Central Alarm Station.

Located on east wall immediately outside BWTR
1 automatic thermal alarm

Sprinkler system

Description of General Capabilities:
The sprinkler system is an automatic system which delivers a maximum of 200 psi of water spray through shower heads placed at locations which maximize fire suppression range capability. In the event of fire, this system should function automatically, requiring no manual assistance.

2 sprinkler heads in ceiling of BWTR, set off at 212°F

Communication Equipment:

Telephones

Description of General Capabilities:
Telephones for internal communication at the Laboratory and off-site communication with Federal, State, County and other agencies are available. A Centrex telephone system and a private telephone line (if Centrex fails) are available for use by all employees.

Located in Room 24 and at the BWTR
Telephones equipped with building-wide paging system

Evacuation alarm, single tone horn

Description of General Capabilities:
The evacuation alarm activates the central alarm system, which automatically activates the emergency response procedures.

TABLE D-3
(Continued)

Spill Control Equipment:

Eight-inch curb around reactor and receiving tanks
Absorbent kept onsite

Description of General Capabilities:
The curbing and enclosed containment volume has been designed to satisfy containment requirements specified in 40 CFR 261.

Decontamination Equipment

Safety shower located next to reactor tank outside curbed area
Eye wash located on south wall next to hood

Description of General Capabilities:
Safety showers and eye washes are used by personnel who receive a chemical splash to skin or eyes. Specific material safety data sheets for the chemical should be obtained prior to working with the chemical to determine if the application of water is indicated for decontamination.

TABLE D-3
(Continued)

EMERGENCY EQUIPMENT AT THE TA-50 CHEMICAL WASTE INCINERATOR AND ROOM 117 STORAGE AREA

Fire Control Equipment:

13 fire extinguishers (9C-CO; 4 A-water)

Description of General Capabilities:
These are portable units of approximately 9 to 15 pounds capacity used in wet chemical laboratory applications. May be used by any employee in the event of fire.

Manually operated fire alarm may be activated by any employee in the event of fire to notify Central Alarm Station.

The sprinkler system is an automatic system which delivers a maximum of 200 psi of water spray through shower heads placed at locations which maximize fire suppression range capability. In the event of fire, this system should function automatically, requiring no manual assistance.

Halon Extinguishing Systems are indicated to supplement automatic sprinkler systems which protect high value equipment, or suppress special hazardous operations or occupancies.

Location:
1 Mechanical Equipment Room 111
2 High Bay Room 112
2 High Bay Room 114
1 South of Library and Conference Room
1 Chemistry Laboratory Room 107
1 Process Engineering Laboratory Room 209
1 Office Area Room 202
1 Room 21
1 Room 117

11 Fire Alarm Pull Boxes connected to the CAS
Location:
1 Mechanical Equipment Room 111
1 High Bay Room 112
2 South of Library and Conference Room
2 High Bay Room 114
1 East of women's changing room
1 Process Engineering Laboratory
1 Office Area Room 202
2 Room 21

Automatic thermal alarm on inlet and exhaust of ventilation system
Automatic thermal sprinkler system throughout offices

4 Fire Hydrants
Location:
1 Northwest corner of Building 84
1 West of Building 69
1 Northeast of Building 37

Halon Extinguishing System, manual and ultraviolet in Room 115

TABLE D-3
(Continued)

Communication Equipment:

Telephones throughout building with building-wide paging system

Description of General Capabilities:
Telephones for internal communication at the Laboratory and off-site communication with Federal, State, County and other agencies are available. A Centrex telephone system and a private telephone line (if Centrex fails) are available for use by all employees.

Radio located in Room 202

Spill Control Equipment:

Absorbent kept onsite
PCB room is bermed to handle all liquids stored
Have Spill Prevention and Containment Plan

Description of General Capabilities:
Containment is designed to handle all liquids stored. Absorbent is used in the event of a small spill.

Decontamination Equipment:

Showers
Emergency eyewash

Description of General Capabilities:
Safety showers and eye washes are used by personnel who receive a chemical splash to skin or eyes. Specific material safety data sheets for the chemical should be obtained prior to working with the chemical to determine if the application of water is indicated for decontamination.

TABLE D-3

(Continued)

EMERGENCY EQUIPMENT - HSE-7 CONTROLLED

Spill Control Equipment: Located at TA-54, Area G

Heavy equipment available for emergencies may include
- 2 scrapers
- 1 bulldozer
- 1 tractor (front end loader)

Shovels
Absorbents (vermiculite) in combustibles storage shed

Description of General Capabilities:
The following pieces of heavy equipment will be used in the event of large spills. Small spills will be absorbed with absorbent.

Decontamination Equipment:

Small decontamination pit for heavy equipment
Showers (MD-11)

Other:

Change room with protective clothing (MD-11)
2-3 dozen respirators (particulates) (MD-11)
2 self-contained, portable air masks (MD-11)
2 emergency generators, portable
3 vehicles are available for evacuation of personnel:
- 2 sanfu
- 1 Jeep (with emergency equipment, e.g., coveralls, booties, tape, rope)

TABLE D-3
(Continued)

EMERGENCY EQUIPMENT AT TA-54, AREA L

Fire Control Equipment:

1 fire hydrant located 30 feet south of site entrance to site
1 CO fire extinguisher located inside trailer at west end of site (B,C)
1 CO fire extinguisher located inside storage shed (B,C)
1 freeze-proof faucet located immediately east of shed

Description of General Capabilities:
These are portable units of approximately 9 to 15 pounds capacity used in wet chemical laboratory applications. May be used by any employee in the event of fire.

Spill Control Equipment:

Shovels
Oversized drums
Absorbent inside storage shed
Heavy equipment from Area G available for any emergencies at Area L
Bermed storage area

Description of General Capabilities:
The following pieces of heavy equipment will be used in the event of large spills. Small spills will be absorbed with absorbent.

Communications Equipment:

2-way radios are available to all personnel when in area
2-way radios are in all vehicles used for moving hazardous waste
Telephone located inside trailer

Description of General Capabilities:
External and internal Laboratory communications which may be used in emergency situations are listed.

Decontamination Equipment:

1 emergency shower and eye wash located immediately east of shed

Description of General Capabilities:
Safety showers and eye washes are used by personnel who receive a chemical splash to skin or eyes. Specific material safety data sheets for the chemical should be obtained prior to working with the chemical to determine if the application of water is indicated for decontamination.

Other:

2 self-contained, portable air masks located inside trailer

TABLE D-3
(Continued)

SUPPLEMENTARY EMERGENCY EQUIPMENT

PAN AM WORLD SERVICES (667-6196)

Equipment	Number
A. Transportation	
1. Pickups, 1/2 through 3/4 ton	183
2. Trucks 1 through 3 ton	25
3. Powerwagon (E-20781 with welder (PN-30256) mounted on vehicle, CC-135	1
4. Buses (11-passenger)	2
5. Stationwagens	11
6. Vans, panels, and carryalls	24
B. Special Equipment	
1. Road grader, Champion, self-propelled blade, with radio	1
2. Grader, John Deere, self-propelled, with radio	1
3. Loaders, bucket, Melroe, Bobcat, 1/3 cubic yards	3
4. Loader, bucket, Michigan, 2-3/4 cubic yards	1
5. Loader, Fiat-Ellis, 3 cubic yards	1
6. Loader, bucket, Michigan, 2-1/2 cubic yards	1
7. Loader, bucket, Michigan, 3-1/4 cubic yards	1
8. Loader, bucket, Yale, 3 cubic yards, with radio	1
9. Loader, bucket, backhoe, International, 1-1/2 cubic yards	1
10. Loaders, bucket, backhoe, Case, 7/8 cubic yards	2
11. Loader, backhoe, Ford, 1 cubic yard	1
12. Snowplows, Bombardier, with blade	2
13. Bulldozer, D-8, Crawler	1
14. Bulldozers, TD-25, International	2
15. Scraper, Terex, self-propelled	1
16. Scraper, Fiat-Ellis, self-propelled	1
17. Bulldozer, 280, rubber-tired, with radio	1
18. Semitrailers	5
19. Lights, camp (electrical, plant, portable, 1000 to 5000 watts)	4
20. Power saws	14 (approx)
21. Flusher, street, 3000-gallon Truck, tanker, 500-gallon, International	1
22. Mobile transceivers (2-way, KOB-753)	64

TABLE D-3
(Continued)

PAN AM WORLD SERVICES (667-6196)

Equipment	Number
B. Special Equipment (cont)	
23. Mobile transceivers (2-way, fire network)	7
24. Handsets (2-way)	8
25. Pageboys (1-way)	235
26. Welders, mounted on trailers and trucks	32
27. Fire tools (hand)	150 (approx)
C. Supplies	
1. Food	
Box lunches	150
D. Other Supplies	
1. Bedding	
Blankets	60
Bedrolls (disposable)	50
(from U.S. Forest Service in Santa Fe)	
2. Butane gas (25-gallon tanks)	4
3. Fuel and lubricants	
4. Miscellaneous supplies	
Manpower	
A. Fire Bosses	
1. Crew bosses	3
2. Straw bosses	12
B. Service Bosses	
1. Transportation boss	1
C. Specialists	
1. Cat bosses	2
2. Bulldozer operators	14
3. Clerks	10
4. Dispatchers	3
5. Mechanics	17
6. Power saw operators	8
7. Radio and telephone operators	10
8. Truck drivers	13
9. Tool sharpener	4

TABLE D-3
(Continued)

PAN AM WORLD SERVICES (667-6196)

Manpower (cont)	Number
7. Radio and telephone operators	10
8. Truck drivers	13
9. Tool sharpener	4
D. Firefighters	
1. Organized crews (approximately 8 men per crew)	14 crews

TABLE D-3
(Continued)

EMERGENCY EQUIPMENT AT THE FIRE DEPARTMENT
(9-911)

8 1000-gallons-per-minute pumper trucks
5 Minipumper trucks
5 1500-gallon tank trucks
4 Modular ambulances
1 Rescue vehicle
69 Self-contained breathing apparati
Various firefighting equipment
Emergency Medical Technician (EMT) medical equipment
98 Personnel with 81 hours MTA training
1 75-foot elevated platform

TABLE D-3
(Continued)

EMERGENCY RESOURCES AT THE MEDICAL FACILITY (HSE-2)
(667-7878) 8 am - 5 pm
(988-0539) off-duty hours

Manpower

6 (2 casual) physicians
2 physician's assistants
10 (1 part-time) nurses
3 (2 casuals) x-ray technicians
2 laboratory technicians

Special Equipment - Portable

1 Radio base station (HSE-Div. net, being installed)
3 Walkie talkies (HSE-Div. net)
1 Portable cardiac monitor and defibrillator
1 Crash cart - emergency equipment
1 Portable physicians bag - drugs
1 Portable suction unit
5 Portable stretchers
1 Ambulance stretcher with straps
6 Wheel chairs
1 Manual resuscitator
6 Portable oxygen units
Several intravenous holders and solutions
6 Otoscope/opthalmoscope sets
1 Portable sphygmomanometer
10 Stethoscopes
Many contamination apparel
1 Eye irrigation system
Many inflatable limb traction splints
3 Industrial first aid kits
Many extrication and cervical collars
Many crutches and canes
Many suture sets

Supplies

Bedding and pillows
Rescue blankets
Burn blankets
Thermal/icing pouches
Multitrauma dressing and bandages

TABLE D-3
(Continued)

EMERGENCY RESOURCES AT THE MEDICAL FACILITY (HSE-2)
(667-7878) 8 am - 5 pm
(988-0539) off-duty hours

Special Facilities - Nonportable

Completely equipped medical clinic with emergency lighting system, x-ray machine, and ambulance entrance. Contamination showers, protective clothing, and wound counters. Suction unit, electrocardiograph (12 lead), pulse rate monitor/recorder, primary response trauma kits are included.

Transportation

1970 Plymouth Sedan

TABLE D-4
HAZARDOUS WASTE EMERGENCY COORDINATORS

(To be notified in succession)

Primary Coordinators	Laboratory Telephone	Home Telephone	Home Address
1. Donald Winston, Emergency Management	7-6211	662-2453	450 Navajo Road, Los Alamos, NM
2. James F. Griffin, Emergency Management Coordinator	7-6211	662-5436	1057 Cedro Court, Los Alamos, NM
3. Z. Edward MacBain, Emergency Management Coordinator	7-6211	662-6211	1856 Cooper Place, Los Alamos, NM
4. James S. Griffiths, Emergency Management Coordinator	7-6211	662-9155	190 Manhattan Loop, Los Alamos, NM

TABLE D-5

ITEMS MONITORED AT THE BATCH TREATMENT PLANT DURING EMERGENCY SHUTDOWN

Item	Monitored For
Piping/Valves	Leaks, damage, poor seals
Gauges	Acceptable range

TABLE D-6

ITEMS MONITORED AT THE WASTE INCINERATOR DURING EMERGENCY SHUTDOWN

Item	Monitored For
Incinerator/Equipment	Functioning
Pumps, valves, pipes	Leaks
Tank by-pass	Leaks
Emergency waste feed cutoff system	Functioning
HEPA Filtration System	Functioning
Radiation	Levels

TABLE D-7
WASTE ANALYSIS PARAMETERS AND TEST METHODS

Parameter	Test Method	Reference
Ignitability	Pensky-Martens Closed-Cup Method	(L) SW1010 (L) ASTM D93-80
Reactivity	Numerous methods and tests	(L,S) SW Section 2.1.3
pH	Electrometric	(L) SW9040
EP Toxicity	EP Toxicity Extraction and Graphite Furnace AA Spectroscopy	(L,S) SW1310
Arsenic		(L) SW7060
Barium		(L) SW7081, SW7080
Cadmium		(L) SW7131, SW7130
Chromium		(L) SW7191, SW7190
Lead		(L) SW7421, SW7420
Selenium		(L) SW7740
Silver		(L) SW7761, SW7760
Mercury	EP Toxicity Extraction and Manual Cold Vapor Technique	(L,S) SW1310
Organochlorine Pesticides	EP Toxicity Extraction and Gas Chromatography	(L) SW8080
Chlorinated Herbicides		(L) SW8150
Toxicity Characteristic Leachng Procedure (TCLP)		(L,S) 40 CFR Part 268, Appendix I
Chemical Composition	95% organic composition by GC/FID	(L) SW 8100
Trace Organic Analysis	Any of the following:	

TABLE D-7 (CONT)
WASTE ANALYSIS PARAMETERS AND TEST METHODS

Parameter	Test Method	Reference
	Volatile organic compounds-GC/MS	(L) SW8240
	Semivolatile organic compounds-GC/MS	
	-Packed column	(L) SW8250
	-Capillary column	(L) SW8270
Heat Value	Bomb calorimeter	(L) A006, ASTM D240
Organic Chlorine	Halide titration of combustion residue	(L,S) A004, ASTM D2361
Ash Content	Residue after combustion in muffle furnace	(L) A001, ASTM D482 (S) A001, ASTM D3174
Cyanide-Free and Total	Distillation and colorimetric (UV)	(L) SW9012
Chrome	Colorimetric method for hexavalent chromium	(L) SW7196
Sulfide	Colorimetric titration	(L) SW9030
Total Metals	Digestion and inductively coupled plasma method	SW3020
Arsenic		(L) SW6010
Barium		(L) SW6010
Beryllium		(L) SW6010
Cadmium		(L) SW6010
Chromium		(L) SW6010
Lead		(L) SW6010
Nickel		(L) SW6010
Selenium		(L) SW6010
Silver		(L) SW6010
Thallium		(L) SW6010
Zinc		(L) SW6010

TABLE D-7 (CONT)
WASTE ANALYSIS PARAMETERS AND TEST METHODS

Parameter	Test Method	Reference
Mercury	Manual Cold Vapor Technique (S) SW7471	(L) SW7470
Free Liquids	Paint Filter Liquids Test	(S) SW9095

(1) "A" refers to Sampling and Analysis Methods for Hazardous Waste Combustion, EPA-600/8-84-002, February 1984.
"ASTM" refers to American Society for Testing Material Standards.
"SW" refers to Test Methods for Evaluating Solid Waste, Physical/Chemical Methods, 3rd Edition, EPA, November 1986.
"L" refers to liquid waste.
"S" refers to solid waste.

(2) Methods for cyanide and sulfide gas generation are pending. SW-846 methods will be used when they become available. Methds recommended by the EPA will be used in the interim.

(3) If EP Toxicity and other analyses do not permit identification of an unknown chemical waste, digested metal samples (per SW3020) will be analyzed for the metals noted.

TABLE D-8
EVACUATION DETERMINATION AND REENTRY

Reason for Evacuation	Determination Made By	Reentry Conditions
Fire	Fire or Evacuation Alarm; Group Leader; Alternate; Lead Engineer, Senior Staff Member present, or HWEC	Following survey by the Chief Fire Officer, HSE-1 and/or HSE-5, and R&D Supervision
Explosion	Same as above	Same as above plus HSE-3
Loss of Ventilation	Group Leader, Alternate, Senior Staff Member, Lead Engineer, or Senior Technician	Following survey by HSE-1 and, or HSE-5, and R&D Supervision
Loss of Electric Power	Same as above	Same as above
Extensive Contamination	Same as above or HSE-1 Representative	Same as above
Airborne Contamination	Same as above or Rad Monitor	Same as above
Escape or Release of Toxic or Hazardous Gas or Fumes	Group Leader, Alternate, Senior Staff Member, Lead Engineer, Senior Technician, or HWEC	Same as above plus HSE-5
Bomb Threat	HSE-3 or Protective Force Representative, R&D Section Leader, Alternative, Senior Staff Member or Lead Engineer, LEDO	Following determination by HSE- or Protective Force Representative and R&D Supervision Following determination of the Hazardous Device Team and LEDO only.

CLOSURE PLANS

PERMIT ATTACHMENT E

NM0890010515-1

CLOSURE PLAN
PERMIT ATTACHMENT E.1
NM 0890010515-1

E.1. Technical Area 16 Industrial Incinerator

The industrial incinerator is located outdoors in the northeastern part of TA-16 (Figure E.1.1) and is equipped for combustion of potentially high explosive (HE) contaminated trash and machine oils. The incinerator consists of a primary combustion chamber, a secondary combustion chamber, and a settling chamber. Both primary and secondary chambers are equipped with gas/oil-fired burners supplied by small volumes of waste oil and propane. The outer shell is fabricated from hot-rolled carbon steel and is mounted on a four inch thick concrete pad.

E.1.1. Estimate of Maximum Waste in Treatment of Storage

Potentially HE contaminated wastes are not stored at this site, but are held in short-term storage (less than 90 days) at the generation point and moved to the site just before a scheduled incineration. The maximum waste in treatment at one time is 810 pounds.

E.1.2. Description of Waste Handled

The industrial incinerator will be used to burn trash from TA-16 which is potentially HE contaminated. This trash consists of a mixture of highly combustible waste such as paper, cardboard cartons, wood boxes and combustible floor sweepings from industrial activities. The mixture may contain up to ten percent by weight of plastic bags, coated paper, laminated paper, treated corrugated cardboard, oily rags, and plastic or rubber scraps. The incinerator is also equipped to burn potentially HE contaminated hydraulic oil, tramp oil, and ignitable solvents from machining operations at TA-16.

E.1.3. Closure Procedure and Decontamination

E.1.3.1. Partial Closure

No partial closure of this unit is expected to occur. Any requirement for decontamination to perform maintenance, without total removal of the unit, is not considered closure.

E.1.3.2. Final Closure

Personnel involved in sampling and decontamination will wear rubber gloves, safety glasses, and coveralls. Personnel involved in dust generating activities, such as digging and filling drums, will wear dust masks to prevent inhalation of contaminated dust. The Laboratory's Industrial Hygiene Group, HSE-5, will review the site survey analytical data and recommend additional protective clothing if necessary.

All remaining wastes will be incinerated before shutting down the industrial incinerator. If for some reason it is not possible to incinerate all the waste on the site, the waste will be sent off site to a permitted facility. When all the waste

inventory has been properly treated or disposed of, the site will be decontaminated as follows: First the entire incineration system, including the two combustion chambers and the settling chamber will be scraped and brushed clean to remove any solid residue. All residue will be placed in 55-gallon drums and transferred to TA-54, Area L for sampling, analysis and appropriate disposal. The incinerator will be wrapped in plastic and sealed with tape, then transported to the HE decontamination slab at TA-16-400. Decontamination of the incinerator at TA-16-400 will follow the procedures below.

Small equipment used to pick up soil, ash, or other residues will be scraped and brushed clean, and the accumulated dust will be placed in drums for sampling, analysis and transport to Area L. The equipment will be wrapped in sheet plastic and sealed with tape, then transported to the HE decontamination slab at TA-16-400.

The decontamination pad at TA-16-400 is used to wash down equipment used in handling HE. The cleaning water is collected in a sump and then hauled to the TA-16 burn pad area with a vacuum truck. At the burn pads, the water is filtered in two sand filters, the filtered residual is burned, and the filtered water discharged under a NPDES permit. Residues from the filter have been tested and are regulated under RCRA. The equipment will be decontaminated by disassembling and scrubbing with detergent and water wash. Testing for decontamination of equipment will be conducted for the regulated constituents potentially present. Washing with detergent is adequate for safe handling as the primary hazard is due to the HE.

The concrete pad underlying the incinerator will be scraped, swept, or brushed clean, and the resulting residue placed in 55-gallon drums. The drums will be transferred to TA-54, Area L for appropriate sampling, analysis and off site disposal. A small trench will be dug around the concrete pad, with a sump at the lowest point. The trench and sump will be lined with sheet plastic. The pad will then be scrubbed with a warm Liquinox(@) or Alconox(@) solution in water. The run-off from the pad, collected in the sump, will be bailed into drums, sampled and transported to TA-54, Area L where the solution will be stored, sampled, analyzed and shipped off site for disposal. Section E.1.6. describes sampling procedures for this water. The washing will be repeated until decontamination is demonstrated. The clean pads will be treated as a nonregulated waste and left in place, or if removed, the resulting rubble used as landfill.

Successful decontamination is defined as:

1. No detectable hazardous constituents in the final sample, or
2. Detectable hazardous constituents in the final sample are equal to or less than, at the 0.01 confidence interval, to their concentration in the unused washwater or background sample.

An alternative demonstration of decontamination may be proposed and justified at the time of closure as circumstances indicate. The Director will evaluate the proposed alternative in accordance with the standards and guidance then in effect and, if approved, incorporate by permit modificaton the alternative into the closure plan.

E.1.4. Closure Schedule

The year of closure is 2100. Closure will observe the schedule provided in Table E.1.1. The contract for equipment disassembly is expected to exceed $100,000. Because laboratory policy requires that work be put out to bid, 90 days are required

to solicit and process the bids. The selection of a contractor will be made before closure begins. Closure is estimated to take 210 days.

E.1.5. Closure Certification

An independent, registered professional engineer and the Permittee shall witness the closure and ensure that the closure follows this plan. Upon completion of closure, the engineer and the DOE shall prepare a letter certifying that the facility has been closed in accordance with this plan. The letter shall be dated and signed by each party, stamped by the registered engineer, and the original copy submitted by the DOE to the Director of the NMEID. One copy shall be maintained at the DOE office and one copy maintained by the HSE-8 Regulatory Compliance Section.

E.1.6. Sampling and Analytical Procedure

The following section defines procedures and methods for sampling, analysis and documentation applicable to closure plans. While the procedures and method are specific, any applicable procedure or method given in SW-846 or other EPA-approved procedure may be used if conditions or experience shows the alternate method to be more appropriate. Disposable samplers may be used.

Sample containers appropriate for the requested analyses will be used for all samples. Sampling will be conducted in accordance with procedures given in *Samplers and Sampling Procedures for Hazardous Waste Streams*, EPA 600/2-80-018 and/or SW-846. Samples will be taken, placed in bottles, sealed, tagged, and immediately packed in vermiculite, sawdust, or, if refrigeration is required, an insulated container with ice. One sample for every ten samples will be either duplicated or split. The duplicated or split sample will be identified by a code so that its source is not available to the analytical laboratory, but analytical results can be compared to its twin.

E.1.6.1. Soil and Solid Residues Sampling

The sampling procedures outlined below are used to determine the amount of hazardous material deposited on a particular area of land, or to determine the leaching rate of the material, or determine the residue level on the soil. Adequate preparation ensures that proper sampling is accomplished.

Surface soil samples will be collected with a trowel or scoop. To sample below 3 in. (8 cm), samples will be collected with a Veihmeyer soil sampler. Drums of solid residues will be sampled with a core sampler or Veihmeyer soil sampler. Drums not capable of being sampled will be assumed to be reactive hazardous waste.

E.1.6.1.1. Cleaning of Sampler

It is important to clean the samplers after each site is sampled. An unused disposable sampler may be presumed clean if still in a factory sealed wrapper. Unsealed samplers will be cleaned prior to use. The samplers will be washed with a warm Liquinox(@) or Alconox(@) solution, rinsed several times with tap water, rinsed with distilled water, drained of excess water, and air-dried or wiped dry. Prevention of cross contamination is of particular importance in these samples.

E.1.6.1.2. Sampling Procedures

Trowel or Scoop

- Take small, equal portions of sample from the surface or near the surface of the material to be sampled.
- Combine the samples in a glass container.
- Cap the container, attach a label and seal, record in field log book, and complete the sample analysis request sheet and chain-of-custody record.

Veihmeyer Sampler

- Assemble the sampler by screwing in the tip and drive head on the sampling tube.
- Insert the tapered handle (drive guide) of the drive hammer through the drive head.
- Place the sampler in a perpendicular position on the material to be sampled.
- With the left hand holding the tube, drive the sampler into the ground/material to the desired sampling depth by pounding the drive head with the drive hammer. Do not drive the tube further than the tip of the hammer's drive guide.
- Record the length of the tube that penetrated the material.
- Move the drive hammer onto the drive head. In this position, the hammer serves as a handle for the sampler.
- Rotate the sampler at least two revolutions to shear off the sample at the bottom.
- Lower the sampler handle (hammer) until it just clears the two ear-like protrusions on the drive head and rotate about 90 degrees.
- Withdraw the sampler from the material by pulling the handle (hammer) upwards. When the sampler cannot be withdrawn by hand, as in deep soil sampling, use a pullerjack and grip.
- Dislodge the hammer from the sampler, turn the sampler tube upside down, tap the head gently against the hammer, and carefully recover the sample from the tube. The sample should slip out easily.
- Store the core sample in a 1,000 or 2,000 ml (1 qt or l/2 gal) sample container.
- Label the sample, affix the seals, record in the field log book, complete the sample analysis request sheet and chain-of-custody record, and deliver the samples to the laboratory for analysis.

E.1.6.2. Liquid Sampling

A Coliwasa sampler or similar device will be used to sample water solutions in order to determine background parameters before washing the area; it will also be used to sample the dirty wash water used in cleaning equipment. The recommended model of the Coliwasa is shown in Figure E.1.2., the main parts consisting of the sampling tube, the closure-locking mechanism, and the closure system. As an alternative to the Coliwasa, glass tubes may be used to sample liquids. The primary advantage in using a glass tube is that the tube will be disposed of as hazardous waste after each sample is collected, thus eliminating the potential for cross contamination.

E.1.6.2.1. Cleaning of Sampler

The sampler must be clean before use. An unused disposable sampler may be presumed clean if still in a factory sealed wrapper. Unsealed samplers will be cleaned prior to use. The used sampler must be washed with a warm detergent solution (Liquinox(@) or Alconox(@)), rinsed several times with tap water, rinsed with distilled water, drained of excess water, and air-dried or wiped dry. A necessary piece of equipment for cleaning the tube of the Coliwasa is a bottle brush that fits tightly inside the diameter of the tube. The brush is connected to a rod of sufficient length to reach the entire length of the sampler tube. Using this ramrod and fiber reinforced paper towels, the Coliwasa tube may be quickly cleaned. Improper cleaning of sample equipment will cause cross contamination of samples. Prevention of contamination is of particular importance in these samples. Clean samplers should be stored in polyethylene plastic tubes or bags in a clean and protected area.

E.1.6.2.2. Sampling Procedures

- Assemble the Coliwasa sampler.
- Make sure that the Coliwasa sampler is clean.
- Check to make sure the sampler is functioning properly. Adjust the locking mechanism, if necessary, to make sure the neoprene rubber stopper provides a tight closure.
- Wear necessary protective clothing and gear and observe required sampling precautions.
- Put the sampler in the open position by placing the stopper rod handle in the T-position and pushing the rod down until the handle sits against the sampler's locking block.
- Slowly lower the Coliwasa sampler into the liquid at a rate that permits the levels of the Liquid inside and outside the sampler tube to be about the same. If the level of the liquid in the sampler tube is lower than that outside the sampler, the sampling rate is too fast and will result in a nonrepresentative sample.
- When the sampler stopper hits the bottom of the liquid container, push the sampler tube downward against the stopper to close the sampler. Lock the

sampler in the closed position by turning the T-handle until it is upright and one end rests tightly on the locking block.

- Slowly withdraw the sampler from the container with one hand while wiping the sampler tube with a disposable cloth with the other hand.

- Carefully discharge the sample into a glass container by slowly opening the sampler. This is done by slowly pulling the lower end of the T-handle away from the locking block while the lower end of the sampler is positioned in the glass container.

- Cap the glass container, attach a label and seal, record in the field log book, and complete the sample analysis request sheet and chain-of-custody record.

- Unscrew the T-handle of the sampler and disengage the locking block. Clean the sampler on site or store the contaminated parts of the sampler in a plastic storage tube or bag for subsequent cleaning. Store used rags in plastic bags for subsequent disposal.

E.1.6.3. Sample Handling and Documentation

Soil and liquid samples will be analyzed either at LANL or at a commercial laboratory. In either case, each sample will be labeled, sealed, and accompanied by a chain-of-custody and a sample analysis request form.

The sample container must be sealed with a gummed paper seal attached to the container in such a way that the seal must be broken in order to open the container. The seal and sample tag must be completed with a waterproof pen. An example of a sample seal is shown in Figure E.1.3.

The sample label is necessary to prevent misidentification of samples and shall include, if applicable, the grid number referenced to positions staked on the site perimeter. The "field information" in the case of soil sampling, shall include observations such as the soil texture and surface appearance, ambient temperature and cloud cover at time of sampling, and precipitation conditions 24 hours before sampling. An example of a sample label is shown in Figure E.1.4.

The chain-of-custody form is necessary to trace sample possession from the time of collection and must accompany every sample. This record becomes especially important when the sample is to be introduced as evidence in litigation. This is a two page record with the original accompanying shipment and the copy retained by the Laboratory. An example of this form is shown in Figure E.1.5.

A separate closure sampling field log book will be kept and will contain all information pertinent to field surveys and sampling. The log book shall have bound and consecutively numbered pages in 8-l/1 by 11-inch format. Minimum entries include:

a. Purpose of sample (routine sampling, special sampling),

b. Location of sampling (coordinates referenced to staked field points, if soil sample),

c. Name and business address of person making log entry,

d. Type of process producing waste,

e. Number and volume of samples,

f. Description of each sampling location, sampling methodology, equipment used, etc.,

g. Date and time of sample collection,

h. Sample destination and transporter's name (name of laboratory, UPS, etc.),

i. Map or photograph of the sampling site, if any,

j. Field observations (ambient temperature, sky conditions, past 24-hour precipitation, etc.),

k. Field measurements, if any (pH, flammability, conductivity, explosivity, etc.),

l. Collector's sample identification number(s), and

m. Signature of person responsible for the log entry.

Sampling situations vary widely. No general rule can be given as to the extent of information that must be entered in the log book. A good rule, however, is to record sufficient information so that someone can reconstruct the sampling situation without relying on the collector's memory.

The sample shipment and chain-of-custody record is accompanied by a sample analysis request sheet. The request sheet has two parts: field and laboratory. The field portion of this form must be completely by the person collecting the sample and include most of the pertinent information noted in the log book. The laboratory portion is intended to be completed by the laboratory personnel when the sample is received.

E.1.7. Quality Assurance/Quality Control

The Permittee shall designate a qualified individual or individuals to independently oversee the closure activities and report directly to senior management on the quality of the performance of this closure. This individual will personally observe a portion of the key activities, assure that sample blanks are used and analyzed and review the analysis reports for accuracy and adequacy. A written QA/QC plan prepared in accordance with SW-846 guidance shall be prepared and followed, with variations from the plan documented and explained. The designated individual shall prepare a written statement for the final report commenting on the adequacy of the analysis showing decontamination.

E.1.8. Final Closure Report

Upon completion of the closure activities, the Permittee shall submit a Final Closure Report to the Director. The report shall document the final closure and contain, at a minimum, the following:

A. The certification described in paragraph E.1.5.

B. Any variance from the approved activities and the reason for the variance.

C. A tabular summary of all sampling results, showing:

1. Sample identification
2. Sampling location
3. The datum reported,
4. Detection limit for each datum,
5. A measure of analytical precision (e.g. uncertainty, range, variance),
6. Identification of analytical procedure, and
7. Identification of analytical laboratory.

D. A QA/QC statement on the adequacy of the analyses and the decontamination demonstration.

E. The location of the file of supporting documentation:

1. Field log books,
2. Laboratory sample analysis reports,
3. The QA/QC documentation, and
4. Chain of custody records.

F. Disposal location of all regulated and non-regulated residues.

G. A certification of accuracy of the report.

TABLE E.1.1.

CLOSURE SCHEDULE

ACTIVITY	MAXIMUM TIME REQUIRED
Notify EID of the closure	-90 days
Let contract request for proposals	-90 days
Receive proposals	-30 days
Select and award contract	-10 days
Begin closure activities	Day 0
Treatment of final wastes	Day 30
Residue removal from incinerator	Day 40
Internal/external washdown	Day 50
Incinerator disassembly	Day 75
Incinerator component decontamination	Day 125
Residue removal from concrete pad	Day 135
Concrete pad wash down	Day 140
Final clean up	Day 160
Decontamination verification	Day 180
Final closure report submitted to EID	Day 210

NOTE: The calendar days given above are completion dates for each activity. In some cases more than one activity may occur simultaneously.

TABLE E.1.2.

ANALYTICAL PARAMETERS

METALS	ORGANICS
	Halogenated volatile organics
Barium	Nonhalogenated volatile organics
Cadmium	Acid-extractable semivolatile organics
Selenium	Base-neutral extractable semivolatile organics
Lead	Phenols
Mercury	
Berylium	

OTHER

Ignitability
Reactivity
pH

NOTE:

Analytical methods are taken from *Test Methods for Evaluating Solid Waste*, EPA SW-846, and may be superseded by more current methods from SW-846 or alternate EPA-approved methods.

Metals may be analyzed for total content. Any metal whose total concentration exceeds the standard for Extraction Procedure Toxicity shall be analyzed by Extraction Procedure Toxicity procedures. Both data shall be reported in the final report.

TABLE E.1.3

SAMPLING SUMMARY

MATERIAL SAMPLED	METALS	ORGANICS	OTHER
Solid residues from combustion and settling chambers.*	X	X	X
Solid residues from the concrete pad*	X	X	X
Small equipment decontamination residues. *	X	X	
Decontamination washwater before use.		X	
Decontamination washwater after use.		X	

NOTE:

Sampling parameters as given in Table E.1.2.

* These residues may be composited before sampling.

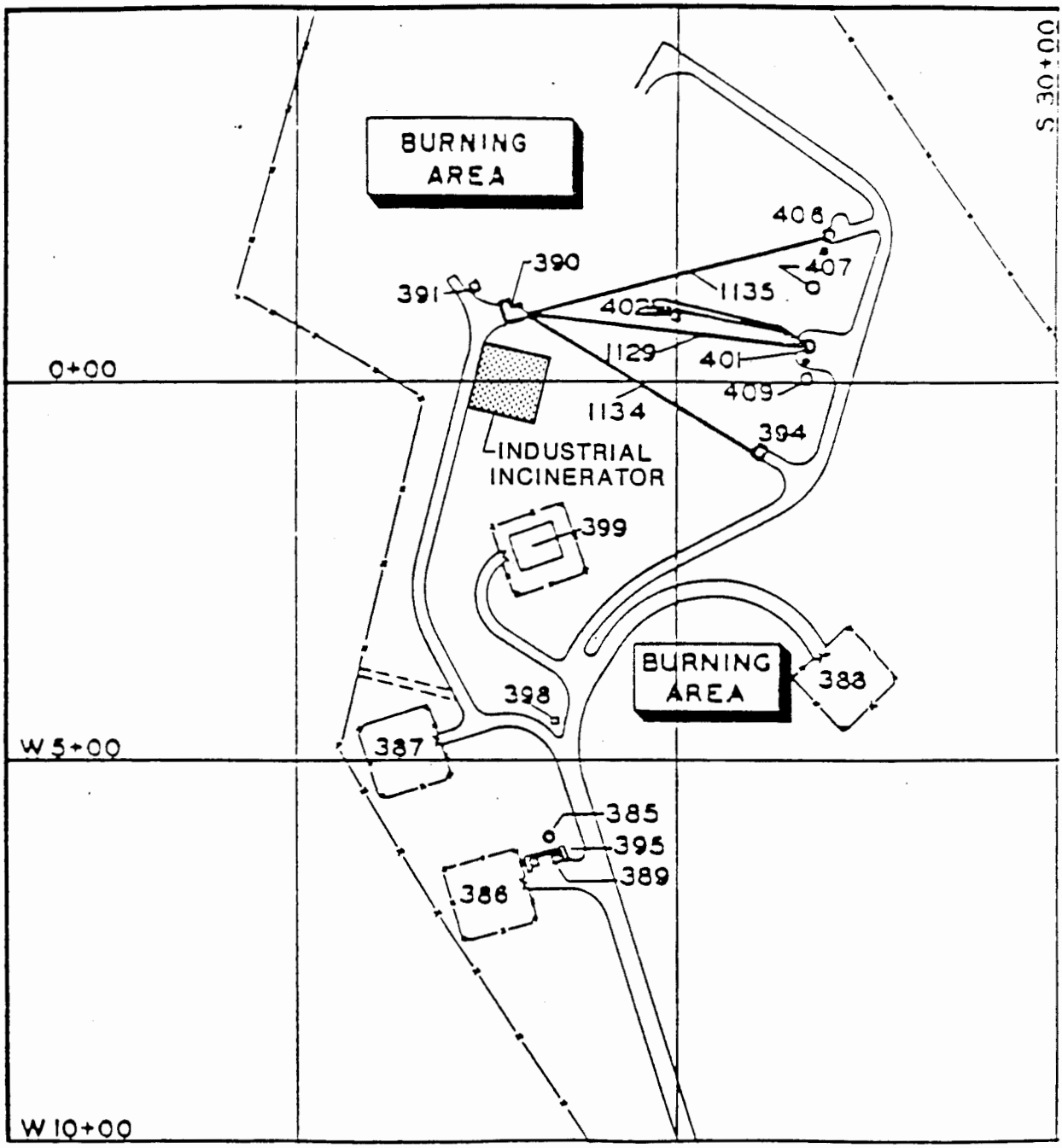

FIGURE E.1.1

TA-16 INDUSTRIAL INCINERATOR

PREPARED FOR

LOS ALAMOS NATIONAL LABORATORY
LOS ALAMOS, NEW MEXICO

© 1984 IT CORPORATION
ALL COPYRIGHTS RESERVED

IT ... Creating a Safer Tomorrow

Do Not Scale This Drawing

65360

DRAWN BY	LLF 11/10/87	CHECKED BY		DRAWING NUMBER 301017-A117
		APPROVED BY		

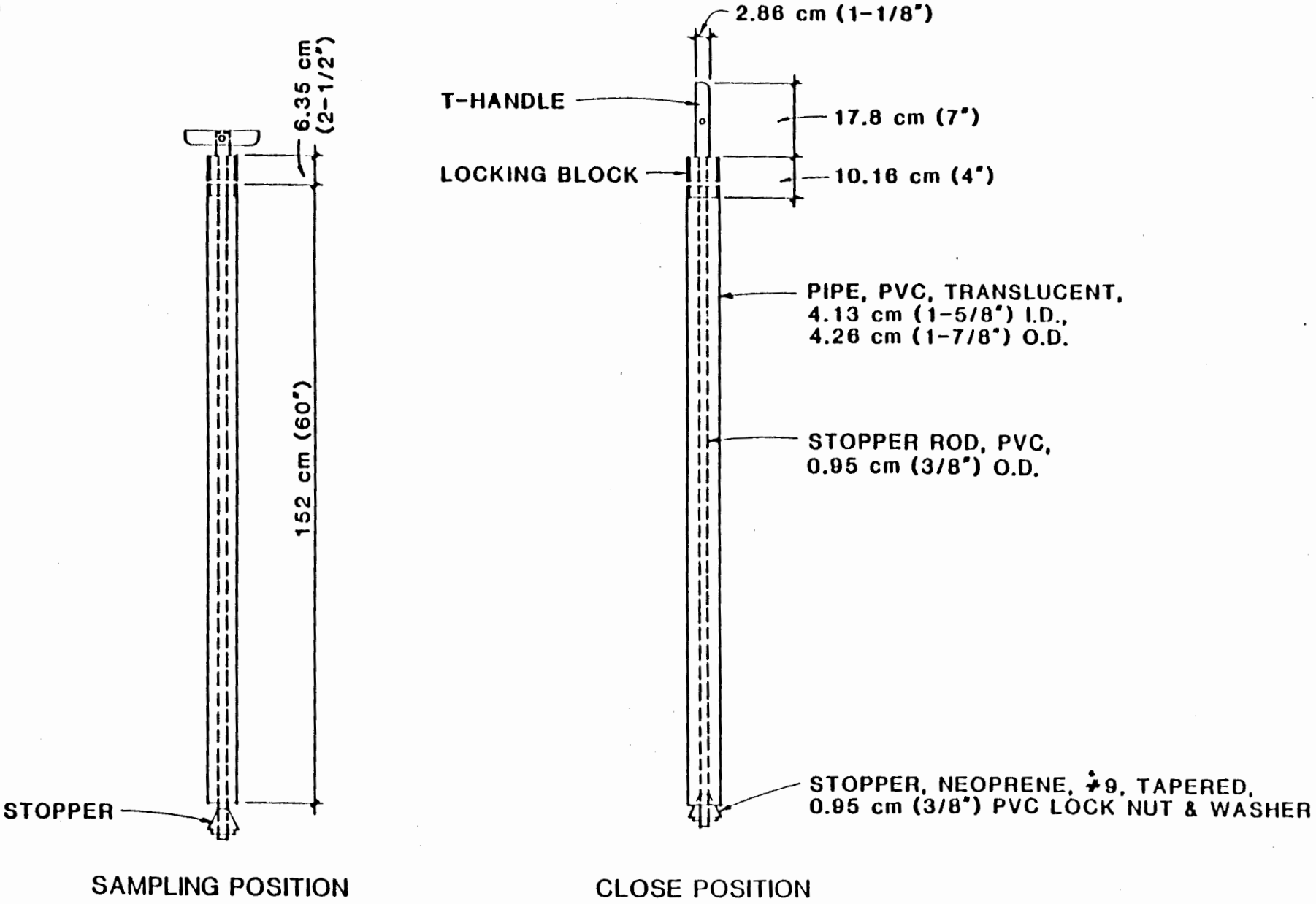

FIGURE E-1.2 COMPOSITE LIQUID WASTE SAMPLER (COLIWASA)

FIGURE E-1.3

EXAMPLE OF SAMPLE SEAL

OFFICIAL SAMPLE SEAL

Collected by _____ Collector's Sample No._____
(Signature)

Date Collected_____ Time Collected_____

Place Collected_____

_____

_____

FIGURE E-1.4

EXAMPLE OF SAMPLE LABEL

OFFICIAL SAMPLE LABEL

Collector_____ Collector's Sample No._____

Place. of Collection_____

_____

Date Sampled_____ Time Sampled_____

Field Information_____

_____

_____

FIGURE E-1.5
CHAIN OF CUSTODY RECORD

Hazardous Materials
Collector's Sample No.___

Location of Sampling: __Producer __Hauler
__Disposal Site
__Other:_____

_____

Company's Name _____Telephone (___)_____

Address_____
number street city state zip

Collector's Name_____Telephone (___)_____
signature

Date Sampled_____Time Sampled_____hours

Type of Process Producing Waste_____

Waste Type Code_____Other_____

Field Information_____

_____

_____

Sample Allocation:

1. _____
name of organization

2. _____
name of organization

3. _____
name of organization

Chain of Possession:

1. _____ _____ _____
signature title inclusive dates

2. _____ _____ _____
signature title inclusive dates

3. _____ _____ _____
signature title inclusive dates

E.2. Batch Waste Treatment Unit and Container Storage Area

The Batch Waste Treatment Unit is located in Building 1 at Technical Area 50 (Figure E.2.1). The system consists of a totally enclosed, vented, 500-gallon pressure vessel equipped with a filtering system, condenser, and vacuum transfer lines. Total system washdown between batches allows for the treatment of incompatible wastes in the unit. Wastes treated in the Batch Waste Treatment Unit include cyanide, chromate plating solutions, and solutions of acids, bases and heavy metals. The batch treatment equipment is mounted on a crack-free concrete floor that is curbed to contain the contents of the process equipment should a leak occur.

A waste transfer and packaging area is also housed in the room in which the Batch Waste Treatment Unit is located. This area consists of a small space that is covered with a ventilation hood. Small quantities of waste are repacked within this area, when necessary.

E.2.1. Estimate of Maximum Waste in Storage

The maximum inventory of hazardous wastes in storage or treatment at the Batch Waste Treatment Unit, including drum storage and pipe and vessel inventory, is estimated at 5 cubic meters (1,300 gallons).

E.2.2. Description of Waste Handled

Three waste streams compose the bulk of the waste treated in the Batch Waste Treatment Unit, although the system is flexible enough to allow treatment of other wastes that may be generated through new Laboratory projects. These streams are an acid/base waste that contains copper, chromate plating waste, and waste cyanide plating solutions. Treatment includes neutralization of acids and bases, decomposition of cyanides and precipitation of metals.

Upon completion of treatment, the resulting solution is filtered and the filtered liquid discharged to either the effluent tank/headworks at the industrial wastewater treatment plant or containers for disposal as hazardous waste. The effluent from the industrial wastewater treatment plant is discharged under a NPDES permit. Metal sludges recovered in the filters are taken to TA-54, Area L for storage, sampling, analysis and off site disposal at a permitted facility.

E.2.3. Closure Procedures and Decontamination

E.2.3.1. Partial Closure

No partial closure of this unit is expected to occur. Any decontamination necessary to perform maintenance, with no intention to remove the unit, is not considered partial closure.

E.2.3.2. Final Closure

Wastes in storage at the initiation of closure will be either shipped off site for disposal or treated using the standard operating procedure (SOP) for the waste, and no more waste will be received. Following the treatment of the last waste, the system will be washed down using the facility's washdown system, and the resulting liquid will be discharged to the industrial wastewater sewer in accordance with standard operating procedures. Following washdown , the system filter cartridges will be replaced with new cartridges. The used cartridges will be placed in drums and transferred to TA-54, Area L for storage and sampling, analysis and off site disposal at a permitted facility. The equipment will then be charged with a Liquinox(@) or Alconox(@) solution in water and circulated and flushed for two hours. Following circulation, the solution will be sampled and analyzed for hazardous constituents to verify decontamination, then pumped into drums and transported to TA-54, Area L for shipment off site. If analysis of the solution indicates contamination, a new filter will be installed and additional washings will be conducted until decontamination is verified. Following successful internal decontamination, the filter cartridges will be removed, placed in drums and transported to TA-54, Area L, for sampling, analysis and off site disposal at a permitted facility.

When internal decontamination is complete, the outside of the equipment will be scrubbed and rinsed with a warm solution of Liquinox(@) or Alconox(@) in water. The cleaning solutions will accumulate in the curbed area and will pumped into drums with a small manually operated drum pump. Samples of this solution will be taken from the drum to verify decontamination. Washdown will be repeated until decontamination is verified. The contained liquid will be transported to TA-54, Area L for sampling, analysis and shipment off site for treatment and/or disposal.

Upon successful external decontamination, the equipment will be disassembled and internally inspected. Any residual matter found will be scraped or brushed off the area where the residue occurred, then washed and rinsed. Dry residues will be placed in approved DOT containers for transport to TA-54, Area L for sampling, analysis and off site disposal at a permitted facility. Liquids from washing and rinsing will be placed in drums and transported to TA-54, Area L for sampling, analysis and off site disposal. Cleaned equipment will be removed from the building and handled as a nonregulated waste.

Following removal of the batch treatment equipment, the floor within the curbed area and the waste handling hood will be washed and rinsed with a warm Liquinox(@) or Alconox(@) solution in water. The wash water will be picked up and put in drums using a drum pump, rags and/or mops, wringing the excess water into a drum. This water will be sampled to demonstrate decontamination. Regulated wastes or residues will be shipped off site for treatment or disposal.

Personnel involved in disassembly and handling of equipment will wear protective equipment, including: acid resistant coveralls, head protection, neoprene-coated gloves, and boots. Wrists and ankles are to be taped to protect against upward and inward splash. As a minimum protection, face shields will be worn. Full face respirators will be used if specified by the Laboratory's Industrial Hygiene Group, HSE-5, following a field inspection.

Spills occurring during equipment disassembly will be contained in the curbed area and will be picked up with mops. No decontamination of container handling

equipment is anticipated during closure because the wastes are inside containers and no contact is expected between wastes and handling equipment. If a container is breached, the handling equipment involved will be decontaminated by washing as above. If the spill occurs outside the curbed area, the spilled materials will be absorbed and cleaned as above. The spill area will be included in the final decontamination verification washdown. All spill residues will be handled in accordance with applicable hazardous waste regulations.

Protective clothing, coveralls, face shields, and boots worn during the wash down will be rinsed in clean water while the items are within the curbed area. The rinse water will be handled with the dirty water from the external wash down. Following internal and external decontamination, the equipment will be considered free from regulated wastes. Protective clothing will be worn by personnel disassembling the equipment. The protective clothing and tools used during disassembling will be washed with detergent and water. The wash water will be collected and analyzed. If the wash water is nonhazardous, the water will be discharged to the industrial waste water sewer. If the wash water contains hazardous constituents, it will be treated on site or transported off site to a permitted disposal facility. Mops and rags used for cleanup will be placed in drums for transport to TA-54, Area L, for sampling, analysis and off site disposal at a permitted facility.

E.2.4. Decontamination Verification

Before the first wash down two samples will be taken of the clean Liquinox(@) or Alconox(@) solution in water and analyzed for the constituents listed in Table E.2.2.

One additional clean solution sample will be taken for each additional washdown event. These analytical results provide background data for decontamination verification.

Dirty washdown solutions will also be analyzed for the constituents listed in Table E.2.2. Analytical procedures will conform to methods found in SW-846. Equipment will be considered to be contaminated if the used wash solutions show a significant increase in the listed constituents over the clean wash solution.

The constituents listed in Table E.2.2. include regulated constituents normally stored and treated in the plant, and additional metals that may have been inadvertently included in treated solutions. A scan for volatile and semivolatile organics is performed to ensure that solvents commonly used within the Laboratory have not contaminated the equipment

Successful decontamination is defined as:

1. No detectable hazardous constituents in the final sample, or
2. Detectable hazardous constituents in the final sample are equal to or less than, at the 0.01 confidence level, their concentration in the unused washwater or background sample.

An alternative demonstration of decontamination may be proposed and justified at the time of closure as circumstances indicate. The Director will evaluate the proposed alternative in accordance with the standards and guidance then in effect and, if approved, incorporate by permit modification the alternative into the closure plan.

E.2.5. Closure Schedule

The year of closure for the TA-50-1 Batch Waste Treatment Unit is 2100. Closure will observe the schedule given in Table E.2.1. The contract for equipment disassembly is expected to exceed $100,000. Because Laboratory policy requires that the work be put out for bid, 90 days are required to solicit and process the bids. The selection of a contractor will be made before closure begins. Closure is estimated to take 210 days.

E.2.6. Closure Certification

An independent registered professional engineer and the Permittee shall witness the closure and ensure that the closure follows this plan. Upon completion of closure, the engineer and the DOE shall prepare a letter certifying that the facility has been closed in accordance with this plan. The letter shall be dated and signed by each party, stamped by the registered engineer, and the original copy submitted by the DOE to the Director of NMEID. One copy shall be maintained at the DOE office and one copy maintained by the HSE-8 Regulatory Compliance Section.

E.2.7. Sampling and Analytical Procedure

The following section defines procedures and methods for sampling, analysis and documentation applicable to closure plans. While the procedures and method are specific, any applicable procedure or method given in SW-846 may be used if conditions or experience shows the alternate method to be more appropriate. All analytical procedures actually used will be annotated in the final closure report. Disposable samplers may be used.

Samples will be taken, placed in bottles, sealed, tagged, and immediately packed in vermiculite, sawdust, or, if refrigeration is required, an insulated container with ice. One sample for every ten samples will be either duplicated or split. The duplicated or split sample will be identified by a code so that its source is not available to the analytical laboratory, but analytical results can be compared to its twin.

Sample containers appropriate for the requested analyses will be used for all samples. Sampling will be conducted in accordance with procedures given in *Samplers and Sampling Procedures for Hazardous Waste Streams*, EPA 600/2-80-018 and/or SW-846.

E.2.7.1. Solid Residues Sampling

The sampling procedures outlined below are used to determine the amount of hazardous material in a container or to determine the leaching rate of the material. Adequate preparation ensures that proper sampling is accomplished. Residues left on the concrete surface will be sampled and analyzed. Drums of solid residues will be sampled with a core sampler or a Veihmeyer soil sampler. Drums not capable of being sampled will be assumed to be hazardous waste.

E.2.7.1.1 . Cleaning of Sampler

It is important to clean the samplers after each site is sampled. An unused disposable sampler may be presumed clean if still in a factory sealed wrapper. Unsealed samplers will be cleaned prior to use. The samplers will be washed with a warm Liquinox(@) or Alconox(@) solution, rinsed several times with tap water,

rinsed with distilled water, drained of excess water, and air-dried or wiped dry. Prevention of cross contamination is of particular importance in these samples.

E.2.7.1.2. Sampling Procedures

Trowel or Scoop

- Take small, equal portions of sample from the surface or near the surface of the material to be sampled.
- Combine the samples in a glass container.
- Cap the container, attach a label and seal, record in field log book, and complete the sample analysis request sheet and chain-of-custody record.

Veihmeyer Sampler

- Assemble the sampler by screwing in the tip and drive head on the sampling tube.
- Insert the tapered handle (drive guide) of the drive hammer through the drive head.
- Place the sampler in a perpendicular position on the material to be sampled.
- With the left hand holding the tube, drive the sampler into the ground/material to the desired sampling depth by pounding the drive head with the drive hammer. Do not drive the tube further than the tip of the hammer's drive guide.
- Record the length of the tube that penetrated the material.
- Move the drive hammer onto the drive head. In this position, the hammer serves as a handle for the sampler.
- Rotate the sampler at least two revolutions to shear off the sample at the bottom.
- Lower the sampler handle (hammer) until it just clears the two ear-like protrusions on the drive head and rotate about 90 degrees.
- Withdraw the sampler from the material by pulling the handle (hammer) upwards. When the sampler cannot be withdrawn by hand, as in deep soil sampling, use a pullerjack and grip.
- Dislodge the hammer from the sampler, turn the sampler tube upside down, tap the head gently against the hammer, and carefully recover the sample from the tube. The sample should slip out easily.
- Store the core sample in a 1,000 or 2,000 ml (1 qt or l/2 gal) sample container.
- Label the sample, affix the seals, record in the field log book, complete the sample analysis request sheet and chain-of-custody record, and deliver the samples to the laboratory for analysis.

E.2.7.2. Liquid Sampling

A Coliwasa sampler or similar device will be used to sample water solutions in order to determine background parameters before washing the area; it will also be used to sample the dirty wash water used in cleaning equipment. The recommended model of the Coliwasa is shown in Figure E.2.2, the main parts consisting of the sampling tube, the closure-locking mechanism, and the closure system. As an alternative to the Coliwasa, glass tubes may be used to sample liquids. The primary advantage in using a glass tube is that the tube will be disposed of as hazardous waste after each sample is collected, thus eliminating the potential for cross contamination.

E.2.7.2.1. Cleaning of Sampler

The sampler must be clean before use. An unused disposable sampler may be presumed clean if still in a factory sealed wrapper. Unsealed samplers will be cleaned prior to use. The used sampler must be washed with a warm detergent solution (Liquinox(@) or Alconox(@)), rinsed several times with tap water, rinsed with distilled water, drained of excess water, and air-dried or wiped dry. A necessary piece of equipment for cleaning the tube of the Coliwasa is a bottle brush that fits tightly inside the diameter of the tube. The brush is connected to a rod of sufficient length to reach the entire length of the sampler tube. Using the ramrod and fiber reinforced paper towels, the Coliwasa tube may be quickly cleaned. Improper cleaning of sample equipment will cause cross contamination of samples. Prevention of contamination is of particular importance in these samples. Clean samplers should be stored in polyethylene plastic tubes or bags in a clean an protected area.

E.2.7.2.2. Sampling Procedures

- Assemble the Coliwasa sampler.
- Make sure that the Coliwasa sampler is clean.
- Check to make sure the sampler is functioning properly. Adjust the locking mechanism, if necessary, to make sure the neoprene rubber stopper provides a tight closure.
- Wear necessary protective clothing and gear and observe required sampling precautions.
- Put the sampler in the open position by placing the stopper rod handle in the T-position and pushing the rod down until the handle sits against the sampler's locking block.
- Slowly lower the Coliwasa sampler into the liquid at a rate that permits the levels of the Liquid inside and outside the sampler tube to be about the same. If the level of the liquid in the sampler tube is lower than that outside the sampler, the sampling rate is too fast and will result in a nonrepresentive sample.
- When the sampler stopper hits the bottom of the liquid container, push the sampler tube downward against the stopper to close the sampler. Lock the

sampler in the closed position by turning the T-handle until it is upright and one end rests tightly on the locking block.

- Slowly withdraw the sampler from the container with one hand while wiping the sampler tube with a disposable cloth with the other hand.

- Carefully discharge the sample into a glass container by slowly opening the sampler. This is done by slowly pulling the lower end of the T-handle away from the locking block while the lower end of the sampler is positioned in the glass container.

- Cap the glass container, attach a label and seal, record in the field log book, and complete the sample analysis request sheet and chain-of-custody record.

- Unscrew the T-handle of the sampler and disengage the locking block. Clean the sampler on site or store the contaminated parts of the sampler in a plastic storage tube or bag for subsequent cleaning. Store used rags in plastic bags for subsequent disposal.

E.2.7.3. Sample Handling and Documentation

Soil and liquid samples will be analyzed either at LANL or at a commercial laboratory. In either case, each sample will be labeled, sealed, and accompanied by a chain-of-custody and a sample analysis request form.

The sample container must be sealed with a gummed paper seal attached to the container in such a way that the seal must be broken in order to open the container. The seal and sample tag must be completed with a waterproof pen. An example of a sample seal is shown in Figure E.2.3.

The sample label is necessary to prevent misidentification of samples and shall include, if applicable, the grid number referenced to positions staked on the site perimeter. The "field information" in the case of soil sampling, shall include observations such as the soil texture and surface appearance, ambient temperature and cloud cover at time of sampling, and precipitation conditions 24 hours before sampling. An example of a sample label is shown in Figure E.2.4.

The chain-of-custody form is necessary to trace sample possession from the time of collection and must accompany every sample. This record becomes especially important when the sample is to be introduced as evidence in litigation. This is a two-page record with the original accompanying shipment and the "copy" retained by the Laboratory. An example of this form is shown in Figure E.2.5.

A separate closure sampling field log book will be kept and will contain all information pertinent to field surveys and sampling. The log book shall have bound and consecutively numbered pages in 8-l/1 by 11-inch format. Minimum entries include:

a. Purpose of sample (routine sampling, special sampling),

b. Location of sampling (coordinates referenced to staked field points, if soil sample),

c. Name and address of person making log entry,

d. Type of process producing waste,

e. Number and volume of sample,

f. Description of each sampling location, sampling methodology, equipment used, etc.,

g. Date and time of sample collection,

h. Sample destination and transporter's name (name of laboratory, UPS, etc),

i. Map or photograph of the sampling site, if any,

j. Field observations (ambient temperature, sky conditions, past 24-hour precipitation, etc),

k. Field measurements, if any (pH, flammability, conductivity, explosivity, etc),

l. Collector's sample identification number(s), and

m. Signature of person responsible for the log entry.

Sampling situations vary widely. No general rule can be given as to the extent of information that must be entered in the log book. A good rule, however, is to record sufficient information so that someone can reconstruct the sampling situation without relying on the collector's memory.

The sample shipment and chain-of-custody record is accompanied by a sample analysis request sheet. The request sheet has two parts: field and laboratory. The field portion of this form must be completely by the person collecting the sample and include most of the pertinent information noted in the log book. The laboratory portion is intended to be completed by the laboratory personnel when the sample is received.

E.2.8. Quality Assurance/Quality Control

The Permittee shall designate a qualified individual or individuals to independently oversee the closure activities and report directly to senior management on the quality of the performance of this closure. This individual will personally observe a portion of the key activities, assure that sample blanks are used and analyzed and review the analysis reports for accuracy and adequacy. A written QA/QC plan in accordance with SW-846 guidance shall be prepared and followed, with variations from the plan documented and explained. The designated individual shall prepare a written statement for the final report commenting on the adequacy of the analysis showing decontamination.

E.2.9. Final Closure Report

Upon completion of the closure activities, the Permittee shall submit a Final Closure Report to the Director. The report shall document the final closure and contain, at a minimum, the following:

A. The certification described in paragraph E.2.6.

B. Any variance from the approved activities and the reason for the variance.

C. A tabular summary of all sampling results, showing:

   1. Sample identification,

   2. Sampling location

   3. The datum reported,

   4. Detection limit for each datum,

   5. A measure of analytical precision (e.g. uncertainty, range, variance),

   6. Identification of analytical procedure, and

   7. Identification of analytical laboratory.

D. A QA/QC statement on the adequacy of the analyses and decontamination demonstration.

E. The location of the file of supporting documentation:

   1. Field log books,

   2. Laboratory sample analysis reports,

   3. The QA/QC documentation, and

   4. Chain of custody records.

F. Disposal location of all regulated and nonregulated residues.

G. A certification of accuracy of the report.

TABLE E.2.1.

CLOSURE SCHEDULE

ACTIVITY	MAXIMUM TIME REQUIRED
Notify EID of the closure	-90 Days
Let contract request for proposals	-90 Days
Receive proposals	-30 Days
Select and award Contract	-10 Days
Begin closure activities	Day 0
Treatment of final wastes	Day 30
Internal wash down	Day 40
External wash down	Day 60
Equipment disassembly	Day 130
Floor wash down	Day 140
Final clean up	Day 160
Decontamination verification	Day 180
Submittal of final report to EID	Day 210

NOTE:

The calendar days given above are completion dates for each activity. In some cases more than one activity may occur simultaneously.

TABLE E.2.2.

ANALYTICAL PARAMETERS

METALS	ORGANICS
Arsenic	Halogenated volatile organics
Barium	Nonhalogenated volatile organics
Cadmium	Acid-extractable semivolatile organics
Chromium	Base-neutral extractable semivolatile organics
Lead	
Mercury	
Selenium	
Silver	
Nickel	
Berylium	

OTHER

Cyanides
pH

Analytical methods are taken from *Test Methods for Evaluating Solid Waste*, EPA SW-846, and may be superseded by more current or alternate methods from SW-846 or alternate EPA-approved methods.

Metals may be analyzed for total content. Any metal whose total concentration exceeds the standard for Extraction Procedure Toxicity shall be analyzed by Extraction Procedure Toxicity procedures. Both data shall be reported in the final report.

TABLE E.2.3.

SAMPLING SUMMARY

MATERIAL SAMPLED	METALS	ORGANICS	OTHER
Internal tank washwater (after)	X	X	X
External tank washwater (before)	X	X	X
External tank washwater, (after)	X	X	X
Floor washwater before		X	
Floor washwater (after)		X	
Solid wastes & residues	X	X	X

NOTE:

Analytical parameters are given in Table E.2.2.

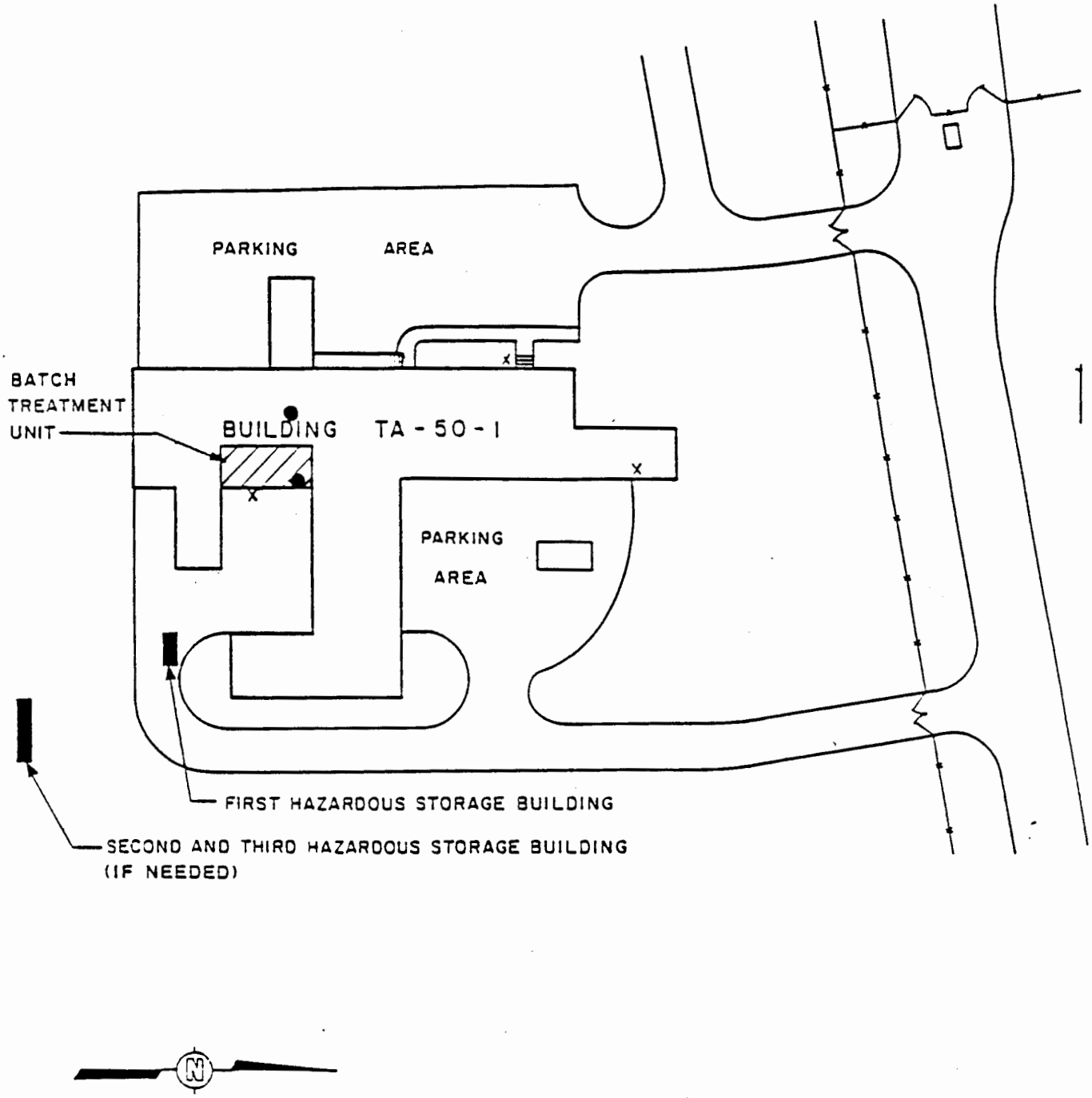

FIGURE 2.1 BATCH TREATMENT UNIT BLDG. TA-50-1

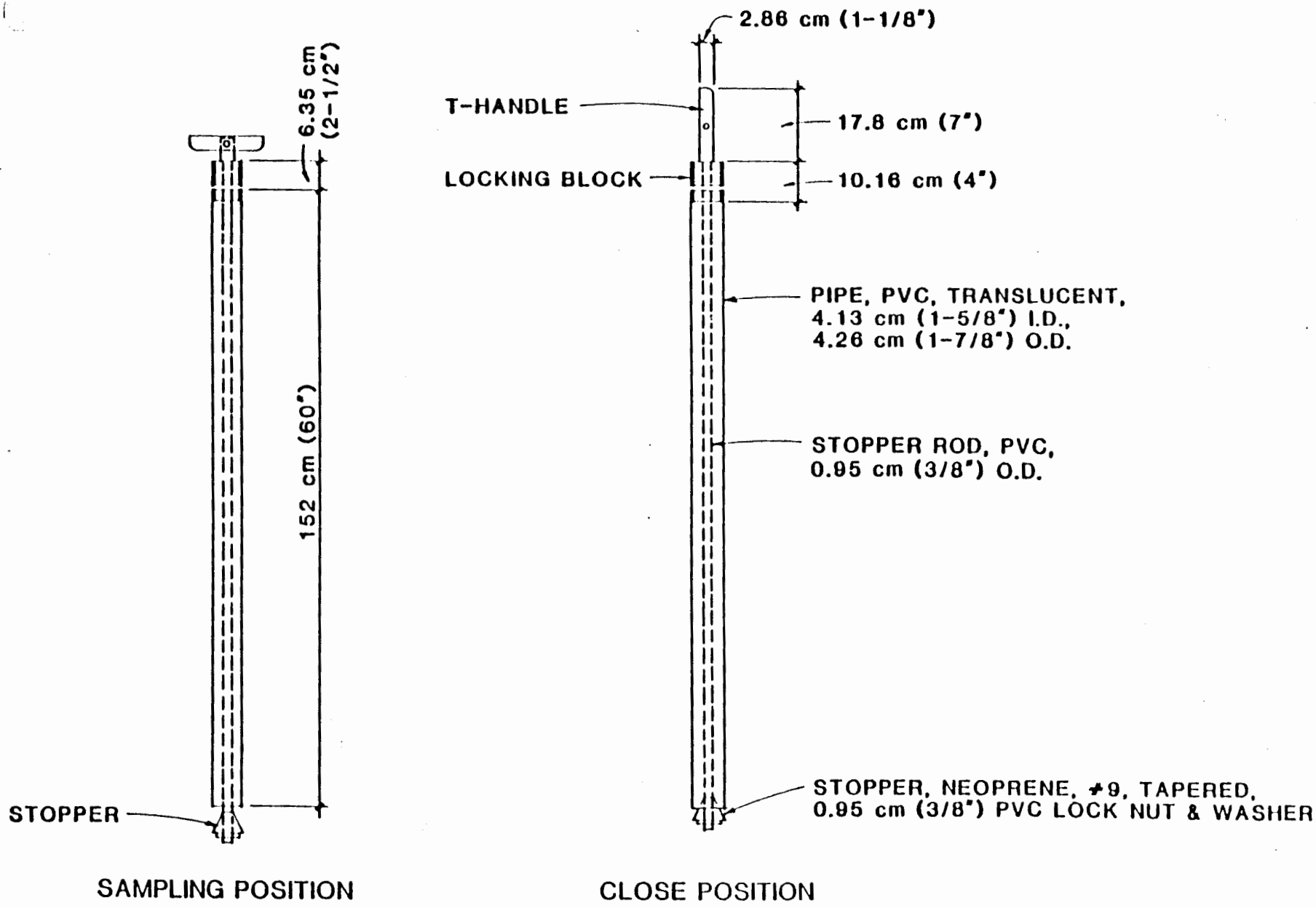

FIGURE E-2.2 COMPOSITE LIQUID WASTE SAMPLER (COLIWASA)

FIGURE E-2.3
EXAMPLE OF SAMPLE SEAL

OFFICIAL SAMPLE SEAL

Collected by _____ Collector's Sample No._____
(Signature)

Date Collected_____ Time Collected_____

Place Collected_____

_____

_____

FIGURE E-2.4
EXAMPLE OF SAMPLE LABEL

OFFICIAL SAMPLE LABEL

Collector_____ Collector's Sample No._____

Place. of Collection_____

_____

Date Sampled_____ Time Sampled_____

Field Information_____

_____

_____

FIGURE E-2.5
CHAIN OF CUSTODY RECORD

Hazardous Materials
Collector's Sample No.___

Location of Sampling: __Producer __Hauler
__Disposal Site
__Other:_____

_____

Company's Name _____Telephone (___)_____

Address_____
number street city state zip

Collector's Name_____Telephone (___)_____
signature

Date Sampled_____Time Sampled_____hours

Type of Process Producing Waste_____

Waste Type Code_____Other_____

Field Information_____

_____

_____

Sample Allocation:

1. _____
name of organization

2. _____
name of organization

3. _____
name of organization

Chain of Possession:

1. _____ _____ _____
signature title inclusive dates

2. _____ _____ _____
signature title inclusive dates

3. _____ _____ _____
signature title inclusive dates

CLOSURE PLAN
PERMIT ATTACHMENT E.3
NM 0890010515-1

E.3. Modular Storage Units

Some containerized wastes are stored in prefabricated modular storage buildings at various locations in TA-50 and TA-54, Area L. See Figures E.3.1 and E.3.2. These storage units are self-contained and are equipped with chemical resistant walls to provide separation of incompatible wastes, a corrosion resistant fiberglass floor grating, and a polypropylene building sump liner.

E.3.1. Estimate of Maximum Waste in Storage

Each storage unit can store a maximum of thirty 55 gallons drums or a total of 1650 gallons of liquid wastes.

E.3.2. Description of Waste Handled

Three waste streams compose the bulk of the waste stored in the modular units at TA-50, although the system is flexible enough to allow storage of other wastes that may be generated through new Laboratory projects. These streams are an acid/base waste that contains copper, chromate plating waste, and waste cyanide plating solutions. These structures may also be used to store any regulated waste while awaiting lab-packing.

The modular units at TA-54, Area L will be used primarily for the storage of lab-packed waste. Since six separate cells are available for storage, there may be up to six different categories of waste stored there while waiting treatment or disposal.

E.3.3. Closure Procedures and Decontamination

E.3.3.1. Partial Closure

Partial closure would consist of closure of one unit or more, while leaving other units in service. In such an event, the following procedures would apply to the unit(s) to be closed.

E.3.3.2. Unit Closure

Personnel involved in disassembly and handling of equipment will wear protective equipment, including: acid/solvent-resistant coveralls, head protection, neoprene coated gloves and boots. Wrists and ankles are to be taped to protect against upward and inward splash. As a minimum protection, face shields will be worn. Full face respirators will be used if specified by the Laboratory's Industrial Hygiene Group, HSE-5, following a field inspection.

The inside of the unit will be scrubbed and rinsed with a warm solution of Liquinox(@) or Alconox(@) in water. The cleaning solutions will accumulate in the internal sumps and will be pumped into drums with a small manually operated drum pump. Samples of this solution will be taken from the drum to verify decontamination. Washdown will be repeated until decontamination is verified.

The drummed liquid will be transported to TA-54, Area L for sampling, analysis and off site treatment and/or disposal.

The unit will be disassembled by removing all removable walls, grates etc. and then visually inspected. Any residual matter found will be scraped or brushed off the area where the residue occurred, then washed and rinsed. Dry residues will be placed in drums for transport to TA-54, Area L, for storage, sampling and analysis prior to off site disposal at a permitted facility. Liquids from washing and rinsing will be placed in approved Department of Transportation (DOT) containers and transported to TA-54, Area L for sampling, analysis and off site disposal. Cleaned pieces will be removed from the unit and handled as a unregulated waste or reassembled into the unit after decontamination is verified.

Spills occurring during disassembly will be contained in the unit and will picked up with mops. No decontamination of container handling equipment is anticipated during closure because the wastes are inside containers and no contact is expected between wastes and handling equipment. If breeching of any container of hazardous waste or hazardous material occurs, all contaminated equipment will be decontaminated by washing with appropriate cleaning solutions. Spills occurring outside the unit will be picked up with absorbent material such as vermiculite or commercial absorbent. The absorbed material will be swept up, placed in a DOT approved container and disposed of as hazardous waste. The area will be mopped or flushed with Liquinox(@) or Alconox(@) solution, the wash water picked up with absorbent material as above and placed in a container for disposal as a hazardous waste. Each container may be sampled and analyzed for hazardous constituents as listed in HWMR-5, Part II, Appendix VIII. Containers not containing hazardous constituents may be handled as unregulated waste.

Units emplaced over impervious surfaces, concrete or asphalt, need not have the surface sampled for spill residues from past handling practices. Units emplaced over absorbent surfaces will have a minimum of three soil samples to a depth of six inches taken in the area of each asccess door. The samples will be separately analyzed for the parameters in Table E.3.2. If contamination is discovered, a three foot grid centered on the locus of contaminated points will be sited and samples taken and analyzed to determine the extent of contamination. Analyses for this investigation can be made for the constituent(s) found in the initial survey. All contaminated soil to a depth of six inches will be removed and disposed of at a permitted facility.

Protective clothing, coveralls, face shields, and boots worn during the wash down will be rinsed in clean water while the items are within the unit. The rinse water will be handled with the dirty water from the external wash down. Following internal and external decontamination, the unit will be considered free from regulated wastes if the washwaters do not show any contamination from the constituents listed in Table E.3.2. Protective clothing will be worn by personnel disassembling the unit. The protective clothing and tools used during disassembly will be washed with detergent and water. The wash waster will be collected and analyzed. If the wash water is nonhazardous, the water will be discharged to the industrial waste water sewer. If the wash water contains hazardous constituents, it will be transported off site to a permitted disposal facility. Mops and rags used for clean-up will be placed in drums for transport to Area L, for ultimate off site disposal at a permitted facility. Nondisposable tools, equipment, etc. which come in contact with the dirty wash water will be decontaminated.

E.3.4. Decontamination Verification

Before the first wash down, two samples will be taken of the clean Liquinox(@) or Alconox(@) solution in water and analyzed for the constituents listed in table E.3.2.

One additional clean solution sample will be taken for each additional washdown event. These analytical results provide background data for decontamination verification.

Dirty washdown solutions will also be analyzed for the constituents listed in Table E.3.2. Analytical procedures will conform to methods found in SW-846. Equipment will be considered to contaminated if the used wash solutions show a significant increase in the listed constituents over the clean wash solution.

The constituents listed in Table E.3.2. include regulated constituents normally stored in the units. A scan for volatile and semivolatile organics is performed to ensure that solvents commonly used within the Laboratory have not contaminated the unit.

Successful decontamination is defined as:

1. No detectable hazardous constituents in the final sample, or
2. Detectable hazardous constituents in the final sample are equal to or less than, at the 0.01 confidence level, their concentration in the unused washwater or background sample.

An alternative demonstration of decontamination may be proposed and justified at the time of closure as circumstances indicate. The Director will evaluate the proposed alternative in accordance with the standards and guidance then in effect and, if approved, incorporate by permit modification the alternative into the closure plan.

E.3.5. Closure Schedule

The year of closure for the modular storage units is 2100. Closure will observe the schedule given in Table E.3.1.

The contract for closure activities is expected to exceed $100,000. Because Laboratory policy requires that the work be put out for bid, 90 days are required to solicit and process the bids. The selection of a contractor will be made before closure begins. Closure is estimated to take 180 days.

E.3.6. Closure Certification

An independent registered professional engineer and the Permittee shall witness the closure and ensure that the closure follows this plan. Upon completion of closure, the engineer and the DOE shall prepare a letter certifying that the facility has been closed in accordance with this plan. The letter shall be dated and signed by each party, stamped by the registered engineer, and the original copy submitted by the DOE to the Director of NMEID. One copy shall be maintained at the DOE office and one copy maintained by the HSE-8 Regulatory Compliance Section.

E.3.7. Sampling and Analytical Procedure

The following section defines procedures and methods for sampling, analysis and documentation applicable to closure plans. While the procedures and method are specific, any applicable procedure or method given in SW-846 may be used if

conditions or experience shows the alternate method to be more appropriate. All analytical procedures actually used will be annotated in the final closure report. Disposable samplers may be used.

Samples will be taken, placed in bottles, sealed, tagged, and immediately packed in vermiculite, sawdust, or, if refrigeration is required, an insulated container with ice. One sample for every ten samples will be either duplicated or split. The duplicated or split sample will be identified by a code so that its source is not available to the analytical laboratory, but analytical results can be compared to its twin.

Sample containers appropriate for the requested analyses will be used for all samples. Sampling will be conducted in accordance with procedures given in *Samplers and Sampling Procedures for Hazardous Waste Streams*, EPA 600/2-80-018 and/or SW-846.

E.3.7.1. Soil and Solid Residues Sampling

Under normal circumstances the following soil sampling information will be inapplicable. Should however, spills occur outside the modular unit, sampling of the area will be required to verify that no hazardous constituents remain upon closure. The sampling procedures outlined below are used to determine the amount of hazardous material deposited on a particular area of land, or to determine the leaching rate of the material, or determine the residue level on the soil. Adequate preparation ensures that proper sampling is accomplished.

Surface soil samples will be collected with a trowel or scoop. To sample below 3 in. (8 cm), samples will be collected with a Veihmeyer soil sampler. Drums of solid residues will be sampled with a core sampler or Veihmeyer soil sampler. Drums not capable of being sampled will be assumed to be hazardous waste.

E.3.7.1.1. Cleaning of Sampler

It is important to clean the samplers after each site is sampled. An unused disposable sampler may be presumed clean if still in a factory sealed wrapper. Unsealed samplers will be cleaned prior to use. The samplers will be washed with a warm Liquinox(@) or Alconox(@) solution, rinsed several times with tap water, rinsed with distilled water, drained of excess water, and air-dried or wiped dry. Prevention of cross contamination is of particular importance in these samples.

E.3.7.1.2. Sampling Procedures

Trowel or Scoop

- Take small, equal portions of sample from the surface or near the surface of the material to be sampled.
- Combine the samples in a glass container.
- Cap the container, attach a label and seal, record in field log book, and complete the sample analysis request sheet and chain-of-custody record.

Veihmeyer Sampler

- Assemble the sampler by screwing in the tip and drive head on the sampling tube.
- Insert the tapered handle (drive guide) of the drive hammer through the drive head.
- Place the sampler in a perpendicular position on the material to be sampled.
- With the left hand holding the tube, drive the sampler into the material to the desired sampling depth by pounding the drive head with the drive hammer. Do not drive the tube further than the tip of the hammer's drive guide.
- Record the length of the tube that penetrated the material.
- Move the drive hammer onto the drive head. In this position, the hammer serves as a handle for the sampler.
- Rotate the sampler at least two revolutions to shear off the sample at the bottom.
- Lower the sampler handle (hammer) until it just clears the two ear-like protrusions on the drive head and rotate about 90 degrees.
- Withdraw the sampler from the material by pulling the handle (hammer) upwards. When the sampler cannot be withdrawn by hand, as in deep soil sampling, use a pullerjack and grip.
- Dislodge the hammer from the sampler, turn the sampler tube upside down, tap the head gently against the hammer, and carefully recover the sample from the tube. The sample should slip out easily.
- Store the core sample in a 1,000 or 2,000 ml (1 qt or l/2 gal) sample container.
- Label the sample, affix the seals, record in the field log book, complete the sample analysis request sheet and chain-of-custody record, and deliver the samples to the laboratory for analysis.

E.3.7.2. Liquid Sampling

A Coliwasa sampler or similar device will be used to sample water solutions in order to determine background parameters before washing the area; it will also be used to sample the dirty wash water used in cleaning equipment. The recommended model of the Coliwasa is shown in Figure E.3.3, the main parts consisting of the sampling tube, the closure-locking mechanism, and the closure system. As an alternative to the Coliwasa, glass tubes may be used to sample liquids. The primary advantage in using a glass tube is that the tube will be disposed of as hazardous waste after each sample is collected, thus eliminating the potential for cross contamination.

E.3.7.2.1. Cleaning of Sampler

The sampler must be clean before use. An unused disposable sampler may be presumed clean if still in a factory sealed wrapper. Unsealed samplers will be

cleaned prior to use. The used sampler must be washed with a warm detergent solution (Liquinox(@) or Alconox(@)), rinsed several times with tap water, rinsed with distilled water, drained of excess water, and air-dried or wiped dry. A necessary piece of equipment for cleaning the tube of the Coliwasa is a bottle brush that fits tightly inside the diameter of the tube. The brush is connected to a rod of sufficient length to reach the entire length of the sampler tube. Using the ramrod and fiber reinforced paper towels, the Coliwasa tube may be quickly cleaned. Improper cleaning of sample equipment will cause cross contamination of samples. Prevention of contamination is of particular importance in these samples. Clean samplers should be stored in polyethylene plastic tubes or bags in a clean an protected area.

E.3.7.2.2. Sampling Procedures

- Assemble the Coliwasa sampler.
- Make sure that the Coliwasa sampler is clean.
- Check to make sure the sampler is functioning properly. Adjust the locking mechanism, if necessary, to make sure the neoprene rubber stopper provides a tight closure.
- Wear necessary protective clothing and gear and observe required sampling precautions.
- Put the sampler in the open position by placing the stopper rod handle in the T-position and pushing the rod down until the handle sits against the sampler's locking block.
- Slowly lower the Coliwasa sampler into the liquid at a rate that permits the levels of the Liquid inside and outside the sampler tube to be about the same. If the level of the liquid in the sampler tube is lower than that outside the sampler, the sampling rate is too fast and will result in a nonrepresentive sample.
- When the sampler stopper hits the bottom of the liquid container, push the sampler tube downward against the stopper to close the sampler. Lock the sampler in the closed position by turning the T-handle until it is upright and one end rests tightly on the locking block.
- Slowly withdraw the sampler from the container with one hand while wiping the sampler tube with a disposable cloth with the other hand.
- Carefully discharge the sample into a glass container by slowly opening the sampler. This is done by slowly pulling the lower end of the T-handle away from the locking block while the lower end of the sampler is positioned in the glass container.
- Cap the glass container, attach a label and seal, record in the field log book, and complete the sample analysis request sheet and chain-of-custody record.
- Unscrew the T-handle of the sampler and disengage the locking block. Clean the sampler on site or store the contaminated parts of the sampler in a plastic

storage tube or bag for subsequent cleaning. Store used rags in plastic bags for subsequent disposal.

E.3.7.3 Sample Handling and Documentation

Soil and liquid samples will be analyzed either at LANL or at a commercial laboratory. In either case, each sample will be labeled, sealed, and accompanied by a chain-of-custody and a sample analysis request form.

The sample container must be sealed with a gummed paper seal attached to the container in such a way that the seal must be broken in order to open the container. The seal and sample tag must be completed with a waterproof pen. An example of a sample seal is shown in Figure E.3.4.

The sample label is necessary to prevent misidentification of samples and shall include, if applicable, the grid number referenced to positions staked on the site perimeter. The "field information" in the case of soil sampling, shall include observations such as the soil texture and surface appearance, ambient temperature and cloud cover at time of sampling, and precipitation conditions 24 hours before sampling. An example of a sample label is shown in Figure E.3.5.

The chain-of-custody form is necessary to trace sample possession from the time of collection and must accompany every sample. This record becomes especially important when the sample is to be introduced as evidence in litigation. This is a two-page record with the original accompanying shipment and the "copy" retained by the Laboratory. An example of this form is shown in Figure E.3.6.

A separate closure sampling field log book will be kept and will contain all information pertinent to field surveys and sampling. The log book shall have bound and consecutively numbered pages in 8-l/1 by 11-inch format. Minimum entries include:

a. Purpose of sample (routine sampling, special sampling),

b. Location of sampling (coordinates referenced to staked field points, if soil sample),

c. Name and address of person making log entry,

d. Type of process producing waste,

e. Number and volume of sample,

f. Description of each sampling location, sampling methodology, equipment used, etc.,

g. Date and time of sample collection,

h. Sample destination and transporter's name (name of laboratory, UPS, etc),

i. Map or photograph of the sampling site, if any,

j. Field observations (ambient temperature, sky conditions, past 24-hour precipitation, etc),

k. Field measurements, if any (pH, flammability, conductivity, explosivity, etc),

l. Collector's sample identification number(s), and

m. Signature of person responsible for the log entry.

Sampling situations vary widely. No general rule can be given as to the extent of information that must be entered in the log book. A good rule, however, is to record sufficient information so that someone can reconstruct the sampling situation without relying on the collector's memory.

The sample shipment and chain-of-custody record is accompanied by a sample analysis request sheet. The request sheet has two parts: field and laboratory. The field portion of this form must be completely by the person collecting the sample and include most of the pertinent information noted in the log book. The laboratory portion is intended to be completed by the laboratory personnel when the sample is received.

E.3.8. Quality Assurance/Quality Control

The Permittee shall designate a qualified individual or individuals to independently oversee the closure activities and report directly to senior management on the quality of the performance of this closure. This individual will personally observe a portion of the key activities, assure that sample blanks are used and analyzed and review the analysis reports for accuracy and adequacy. A written QA/QC plan in accordance with SW-846 guidance shall be prepared and followed, with variations from the plan documented and explained. The designated individual shall prepare a written statement for the final report commenting on the adequacy of the analysis showing decontamination.

E.3.9. Final Closure Report

Upon completion of the closure activities, the Permittee shall submit a Final Closure Report to the Director. The report shall document the final closure and contain, at a minimum, the following:

A. The certification described in paragraph E.3.6.

B. Any variance from the approved activities and the reason for the variance.

C. A tabular summary of all sampling results, showing:

1. Sample identification

2. Sampling location

3. The datum reported,

4. Detection limit for each datum,

5. A measure of analytical precision (e.g. uncertainty, range, variance),

6. Identification of analytical procedure, and

7. Identification of analytical laboratory.

D. A QA/QC statement on the adequacy of the analyses and the decontamination determination.

E. The location of the file of supporting documentation:

1. Field log books,

2. Laboratory sample analysis reports,

3. The QA/QC documentation, and

4. Chain of custody records.

F. Disposal location of all regulated and nonregulated residues.

G. A certification of accuracy of the report.

TABLE E.3.1.

CLOSURE SCHEDULE

ACTIVITY	MAXIMUM TIME REQUIRED
Notify EID of closure	-90 Days
Advertise for proposals	-90 Days
Receive proposals	-30 Days
Select contractor and award contract	-10 Days
Begin closure activities	Day 0
Internal wash down complete	Day 30
External wash down complete	Day 50
Unit disassemblyas required	Day 80
Floor wash down	Day 100
Final clean up	Day 120
Decontamination verification	Day 150
Submit final report to EID	Day 180

NOTES:

The calendar days given above are completion dates for each activity. In some cases more than one activity may occur simultaneously.

This schedule is applicable to either partial or final closure.

TABLE E.3.2.

ANALYTICAL PARAMETERS

METALS	ORGANICS
Arsenic	Halogenated volatile organics
Barium	Nonhalogenated volatile organics
Cadmium	Acid-extractable semivolatile organics
Selenium	Base-neutral extractable semivolatile organics
Lead	Phenols
Mercury	Organochlorine pesticides
Nickel	Chloronated herbicides
Berylium	
Chromium	
Silver	

OTHER

Cyanides
Ignitability
Reactivity
pH

NOTES:

Analytical methods are taken from *Test Methods for Evaluating Solid Waste*, EPA SW-846, and may be superseded by more current methods from SW-846 or alternate EPA-approved methods.

Metals may be analyzed for total content. Any metal whose total concentration exceeds the standard for Extraction Procedure Toxicity shall be analyzed by Extraction Procedure Toxicity procedures. Both data shall be reported in the final report.

TABLE E.3.3.

SAMPLING SUMMARY

MATERIAL SAMPLED	METALS	ORGANICS	OTHER
Soil sampling *	X	X	X
Solid wastes & residues	X	X	X
Washwater before use	X	X	X
Washwater after use	X	X	X
Protective clothing washwater		X	

NOTES:

Analytical parameters are given in Table E.3.2.

* For units placed over permeable surfaces.

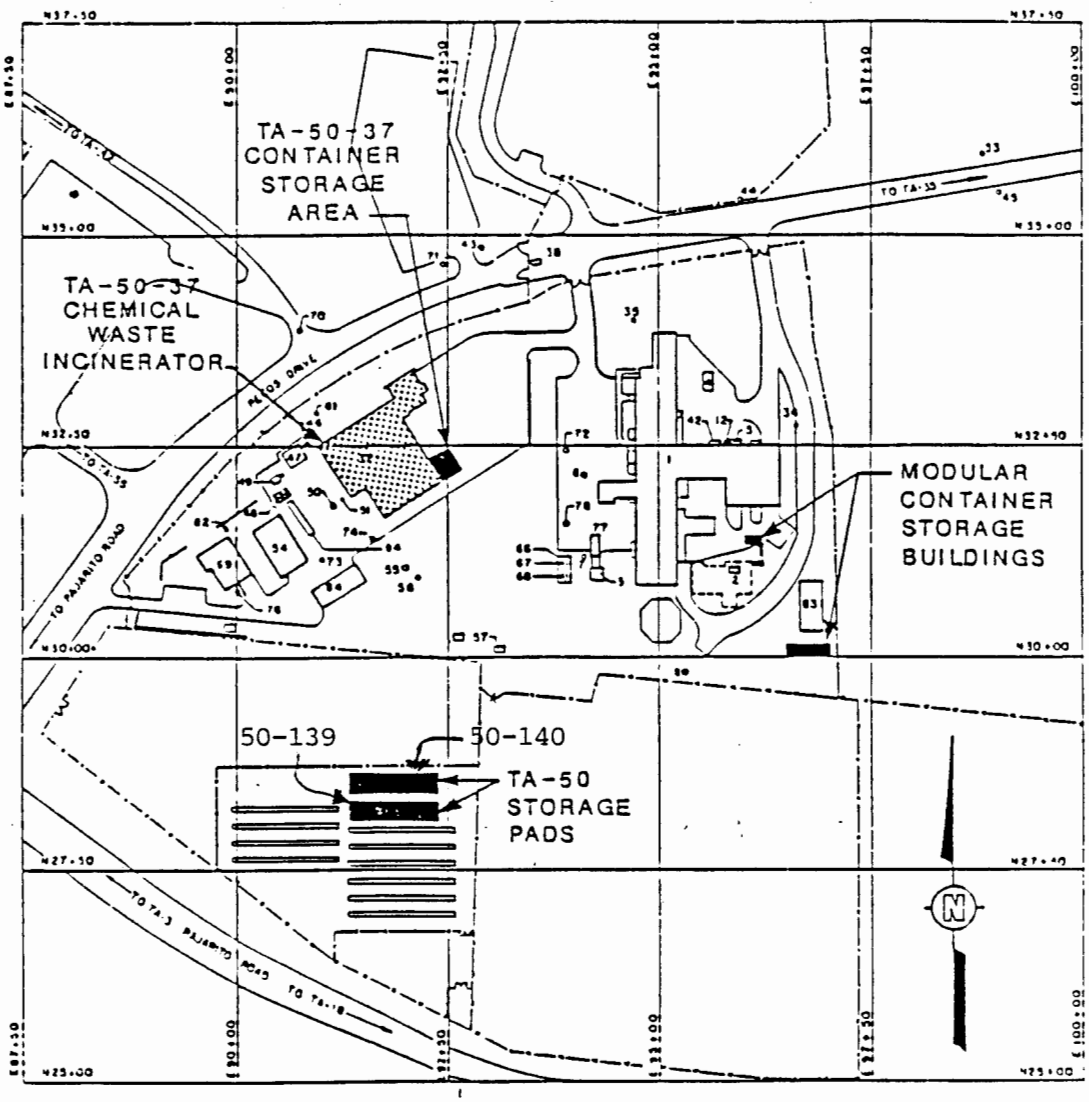

FIGURE E.3.1

LOCATIONS OF TA-50
CHEMICAL WASTE INCINERATOR
AND CONTAINER STORAGE
UNITS

PREPARED FOR

LOS ALAMOS
NATIONAL LABORATORY
LOS ALAMOS, NEW MEXICO

INTERNATIONAL
TECHNOLOGY
CORPORATION

© 1984 IT CORPORATION
ALL COPYRIGHTS RESERVED

Do Not Scale This Drawing

KCT 10/11/88 | CHECKED BY | APPROVED BY | DRAWING NUMBER 3

DIETZGEN

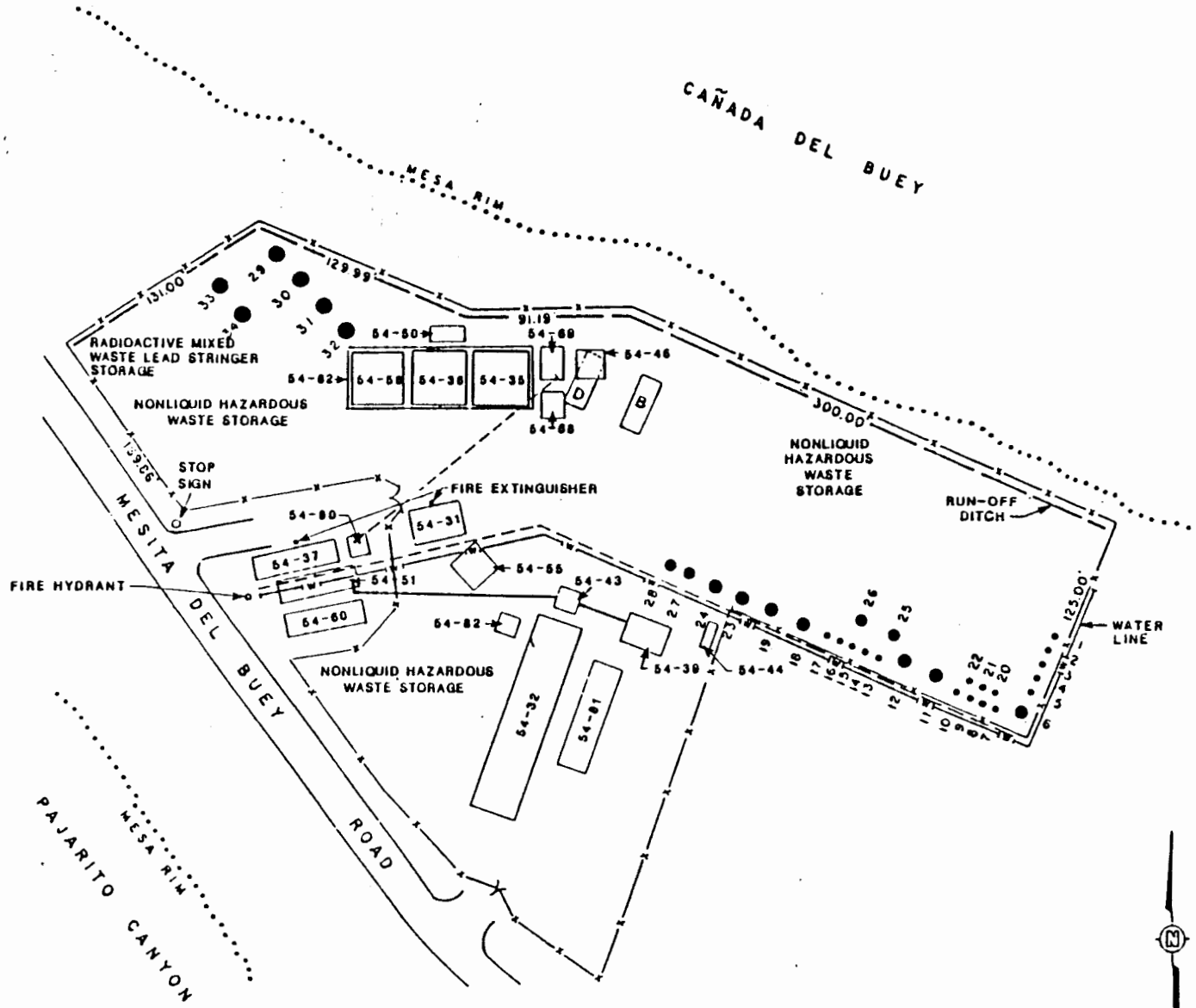

LEGEND

MATERIAL DISPOSAL UNITS:

54-31 PACKAGING BUILDING
54-32 ROOFED WASTE STORAGE PAD
54-35 TREATMENT PAD
54-36 SAMPLING PAD
54-37 OFFICE TRAILER
54-39 PCB BUILDING
54-43 SEPTIC HOLDING TANK
54-44 PROPANE TANK
54-46 EQUIPMENT STORAGE BUILDING
54-50 EQUIPMENT STORAGE BUILDING
54-51 OFFICE TRAILER
54-55 SAMPLE PREP LAB BUILDING
54-58 TRANSPORT PAD
54-60 OFFICE TRAILER
54-62 CANOPY OVER MD-35,MD-36,MD-58
54-68 MODULAR STORAGE BUILDING
54-69 MODULAR STORAGE BUILDING
54-80 SEPTIC HOLDING TANK
54-81 PCB OIL TANK STORAGE
54-82 DRUM CRUSHER
B SURFACE IMPOUNDMENT
D SURFACE IMPOUNDMENT

● LOCATION OF AREA L INACTIVE SHAFTS

50 25 0 50 FEET
SCALE

FIGURE E.3.2

TA-54 AREA L
WASTE MANAGEMENT UNITS

PREPARED FOR

LOS ALAMOS
NATIONAL LABORATORY
LOS ALAMOS, NEW MEXICO

IT ... Creating a Safer Tomorrow

DRAWING NUMBER 5612161 01 B1

DRAWN BY | CHECKED BY | APPROVED BY | 10/20/88

© 1984 IT CORPORATION
ALL COPYRIGHTS RESERVED
Do Not Scale This Drawing

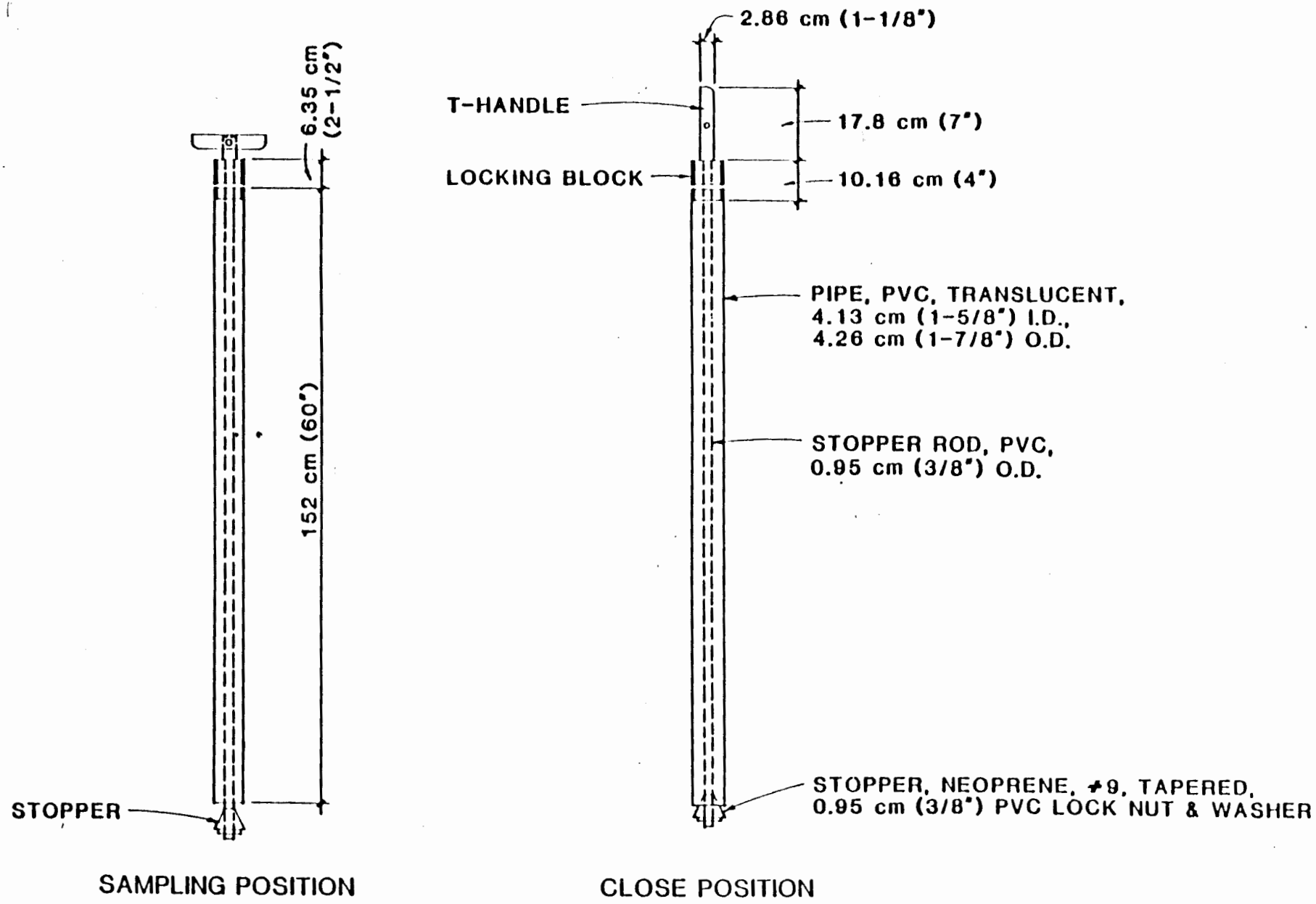

FIGURE E-3.3 COMPOSITE LIQUID WASTE SAMPLER (COLIWASA)

FIGURE E-3.4

EXAMPLE OF SAMPLE SEAL

OFFICIAL SAMPLE SEAL

Collected by _____ Collector's Sample No. _____
(Signature)

Date Collected _____ Time Collected _____

Place Collected _____

_____

_____

FIGURE E-3.5

EXAMPLE OF SAMPLE LABEL

OFFICIAL SAMPLE LABEL

Collector _____ Collector's Sample No. _____

Place. of Collection _____

_____

Date Sampled _____ Time Sampled _____

Field Information _____

_____

_____

FIGURE E-3.6
CHAIN OF CUSTODY RECORD

Hazardous Materials
Collector's Sample No.___

Location of Sampling: __Producer __Hauler
__Disposal Site
__Other:_____

_____

Company's Name _____Telephone (___)_____

Address_____
number street city state zip

Collector's Name_____Telephone (___)_____
signature

Date Sampled_____Time Sampled_____hours

Type of Process Producing Waste_____

Waste Type Code_____Other_____

Field Information_____

_____

_____

Sample Allocation:

1. _____
name of organization

2. _____
name of organization

3. _____
name of organization

Chain of Possession:

1. _____ _____ _____
signature title inclusive dates

2. _____ _____ _____
signature title inclusive dates

3. _____ _____ _____
signature title inclusive dates

E.4. Chemical Waste Incinerator

The waste incinerator is located in Building 37 at Technical Area 50 (Figure E.5.1.). The controlled-air incinerator is rated at a nominal 45 kilograms per hour waste feed throughput. The incineraor is currently permitted to burn PCB-contaminated liquid materials and radioactive wastes. Modifications to the incinerator include additions of liquid waste tanks and solid waste feed preparation lines, a gravity ash removal system, a high-efficiency off-gas cleanup system, and backup utility systems. Standard combustion equipment has been modified to permit effective incineration of waste in solid, liquid, slurry, or gaseous form. Particular attention has been given to engineering for proper waste containment with an emphasis on radioactivity.

E.4.1. Estimate of Maximum Waste in Storage and Treatment

The maximum inventory of hazardous wastes stored and treated atany one time in the TA-50 waste incinerator is estimated at 8 cubic meters (2200 gallons).

E.4.2. Description of Waste Handled

The incinerator and the flue gas treatment systems are capable of combusting a variety of hazardous wastes, including chemical waste, mixed waste, low-level radioactive wastes and transuranic wastes. The Laboratory wastes are a mixture of liquid and solid hazardous wastes composed of various organic solvents and liquids, as well as chemically contaminated paper, wood, and plastics. The liquids can contain either characteristic or listed wastes containing HWMR-5, Part II, Appendix VIII constituents. The incinerator burns all HWMR-5, Part II, Appendix VIII constituents with an incinerability ranking equal to or better than carbon tetra-chloride.

E.4.3. Closure Procedure

E.4.3.1. Partial Closure

No partial closure of this unit is expected to occur. Any requirement for decontamination to perform maintenance, without total removal of the unit, is not considered closure. Components removed and replaced will be decontaminated or disposed of as regulated waste.

E.4.3.2. Final Closure

All remaining wastes will be incinerated before shutting down the incinerator. If for some reason it is not possible to incinerate all the waste on the site, the waste will be sent to a permitted off-site treatment or disposal facility.

Upon the decision to close the facility, the equipment and building will be surveyed to determine the nature and levels of both radioactive and hazardous chemical contamination. Using the Laboratory guidelines and procedures, a

decommissioning document will be prepared describing in detail the methods and procedures for decontamination, demolition, packaging, and disposal. All materials generated from decontamination and demolition will be treated as readioactive or mixed waste and disposed of in accordance with appropriate regulations. A copy of the final decommissioning document will be provided to the EID upon publishing.

When all the waste inventory has been properly disposed of, the unit will be decontaminated as follows: First, the entire incineration system (incinerator, all relevant lines and pumps, and the air pollution control system) will be dissassembled and inspected. Those components amenable to decontamination will be cleaned by washing with Liquinox(@) or Alconox(@) solution in water, followed by a thorough steam cleaning. The spent cleaning solution willbe collected and analyzed for hazardous constituents. If no constituents are detected, these components will be deemed decontaminated and released for reuse or disposal. If constituents are detected , further cleaning will be repeated until decontamination is verified.Those components not amenable to decontamination, the two incinerator chambers, including all attached refractory and residual solid residue, will be sealed and sent to a designated radioactive mixed waste disposal facility. The manner of disposal will depend on any residual radionuclide contamination as well as any residual hazardous waste contamination. All radioactive components will be decontaminated to the extent practicable and disposed of according to appropriate Department of Energy orders.

Personnel involved in decontaminating the incinerator will wear protective equipment, including, acid/solvent-resistant coveralls, head protection, neoprene-coated gloves, and boots, Wrists and ankles are to be taped to protect against upward and inward splash. As a minimum protection, face shields will be worn. Full face respirators will be used if specified by the Laboratory's Industrial Hygiene Group, HSE-5, following a field inspection.

The protective clothing and tools used during the wash down will be cleaned with detergent and water. The wash waster will be collected and analyzed. If the wash water is non-hazardous, the water will be discharged to the industrial waste water sewer. If the wash water contains hazardous constituents, it will be treated on-site or transported off-site to a permitted facility. Mops and rags used for clean-up will be placed in drums for transport to Area L, with ultimate off-site disposal at a permitted facility.

E.4.4. Decontamination Verification

Before the first wash down, two samples will be taken of the clean Liquinox(@) or Alconox(@) solution in water and analyzed for the constituents listed in Table E.4.2.

One additional clean wash solution sample will be taken for each additional washdown event. These analytical results provide background data for decontamination verficiation.

Dirty wash-down solutions will be analyzed for the constituents listed in Table E.4.2. Analytical procedures will conform to methods found in SW 846. Equipment will be considered to be contaminated if the dirty wash solutions show a significant increase in the listed constituents over the clean wash solution.

The constituents listed in Table E.4.2. include regulated constituents normally treated in the unit. A scan for volatile and semivolatile organics is performed to

ensure that solvents commonly used within the Laboratory have not contaminated the unit.

Successful decontamination is defined as:

1. No detectable hazardous constituents in the final sample, or
2. Detectable hazardous constituents in the final sample are equal to or less than, at the 0.01 confidence level, their concentration in the unused washwater or background sample.

An alternative demonstration of decontamination may be proposed and justified at the time of closure as circumstances indicate. The Director will evaluate the proposed alternative in accordance with the standards and guidance then in effect and, if approved, incorporate by permit modification the alternative into the closure plan.

E.4.5. Closure Schedule

Characterization of the final delivery of hazardous waste may require up to 30 days. An estimated 60 days will be required to schedule and process the final wastes on hand. Once the chemical decontamination is completed the incinerator will be surveyed for radioactive contamination in preparation for decommissioning.

The survey of the incinerator facilities to determine the nature and level of radioactive contamination and to prepare the decommissioning document is estimated to take one year. Decommissioning and final disposal are estimated to take up to one year.

The year of closure for the TA-50-37 incinerator is 2100. Closure will observe the schedule given in Table E.4.1.

E.4.6. Closure Certification

An independent registered professional engineer and the Permittee shall witness the closure and ensure that the closure follows this plan. Upon completion of closure, the engineer and the DOE shall prepare a letter certifying that the facility has been closed in accordance with this plan. The letter shall be dated and signed by each party, stamped by the registered engineer, and the original copy submitted by the DOE to the Director of NMEID. One copy shall be maintained at the DOE office and one copy maintained by the HSE-8 Regulatory Compliance Section.

E.4.7. Sampling and Analytical Procedure

The following section defines procedures and methods for sampling, analysis and documentation applicable to closure plans. While the procedures and method are specific, any applicable procedure or method given in SW-846 may be used if conditions or experience shows the alternate method to be more appropriate. All analytical procedures actually used will be annotated in the final closure report. Disposable samplers may be used.

Samples will be taken, placed in bottles, sealed, tagged, and immediately packed in vermiculite, sawdust, or, if refrigeration is required, an insulated container with ice. One sample for every ten samples will be either duplicated or split. The duplicated or split sample will be identified by a code so that its source is not available to the analytical laboratory, but analytical results can be compared to its twin.

Sample containers appropriate for the requested analyses will be used for all samples. Sampling will be conducted in accordance with procedures given in *Samplers and Sampling Procedures for Hazardous Waste Streams*, EPA 600/2-80-018 and/or SW 846.

E.4.7.1. Solid Residues Sampling

Under normal circumstances the following soil sampling information is inapplicable. Should, however, spills occur outside the building, sampling of the area will be required to verify that no hazardous constituents remain upon closure. The sampling procedures outlined below are used to determine the amount of hazardous material deposited on a particular area of land, or to determine the leaching rate of the material, or determine the residue level on the soil. Adequate preparation ensures that proper sampling is accomplished.

Surface soil samples will be collected with a trowel or scoop. To sample below 3 in. (8 cm), samples will be collected with a Veihmeyer soil sampler. Drums of solid residues will be sampled with a core sampler or Veihmeyer sampler. Drums unable to be sampled will be assumed to be hazardous waste.

E.4.7.1.1. Cleaning of Sampler

It is imporant to clean the samplers after each site is sampled. An unused disposable sampler may be presumed clean if still in a factory sealed wrapper. Unsealed samplers will be cleaned prior to use. The samplers will be washed with a warm Liquinox(@) or Alconox(@) solution, rinsed several times with tap water, rinsed with distilled water, drained of excess water, and air-dried or wiped

E.4.7.1.2. Sampling Procedures

Trowel or Scoop

- Take small, equal portions of sample from the surface or near the surface of the material to be sampled.
- Combine the samples in a glass container.
- Cap the container, attach a label and seal, record in field log book, and complete the sample analysis request sheet and chain-of-custody record.

Veihmeyer Sampler

- Assemble the sampler by screwing in the tip and drive head on the sampling tube.
- Insert the tapered handle (drive guide) of the drive hammer through the drive head.
- Place the sampler in a perpendicular postion on the material to be sampled.
- With the left hand holding the tube, drive the sampler into the material to the desired sampling depth by pounding the drive head with the drive hammer. Do not drive the tube further than the tip of the hammer's drive guide.

- Record the length of the tube that penetrated the material.
- Move the drive hammer onto the drive head. In this position, the hammer serves as a handle for the sampler.
- Rotate the sampler at least two revolutions to shear off the sample at the bottom.
- Lower the sampler handle (hammer) until it just clears the two ear-like protrusions on the drive head and rotate about 90 degrees.
- Withdraw the sampler from the material by pulling the handle (hammer) upwards. When the sampler cannot be withdrawn by hand, as in deep soil sampling, use a pullerjack and grip.
- Dislodge the hammer from the sampler, turn the sampler tube upside down, tap the head gently against the hammer, and carefully recover the sample from the tube. The sample should slip out easily.
- Store the core sample in a 1,000 or 2,000 ml (1 qt or l/2 gal) sample container.
- Label the sample, affix the seals, record in the field log book, complete the sample analysis request sheet and chain-of-custody record, and deliver the samples to the laboratory for analysis.

E.4.8.2. Liquid Sampling

A Coliwasa sampler or similar device will be used to sample water solutions in order to determine background paramters before washing the area; it will also be used to sample the dirty wash water used in cleaning equipment. The recommended model of the Coliwasa is shown in Figure E.4.2, the main parts consisting of the sampling tube, the closure-locking mechanism, and the closure system. As an alternative to the Coliwasa, glass tubes may be used to sample liquids. The primary advantage in using a glass tube is that the tube will be disposed of as hazardous waste after each sample is collected, thus eliminating the potential for cross-contamination.

E.4.8.2.1. Cleaning of Sampler

The sampler must be clean before use. An unused disposable sampler may be presumed clean if still in a factory sealed wrapper. Unsealed samplers will be cleaned prior to use. The used sampler must be washed with a warm detergent solution (Liquinox(@) or Alconox(@)), rinsed several times with tap water, rinsed with distilled water, drained of excess water, and air-dried or wiped dry. A necessary piece of equipment for cleaning the tube of the Coliwasa is a bottle brush that fits tightly inside the diameter of the tube. The brush is connected to a rod of sufficient length to reach the entire length of the sampler tube. Using ths ramrod and fiber-reinforced paper towels, the Coliwasa tube may be quickly cleaned. Improper cleaning of sample equipment will cause cross-contamination of samples. Prevention of contamination is of particular importance in these samples. Clean samples should be stored in polyethylene plastic tubes or bags in a clean an prtoected area.

E.4.8.2.2. Sampling Procedures

- Assemble the Coliwasa sampler.
- Make sure that the Coliwasa sampler is clean.
- Check to make sure the sampler is functioning properly. Adjust the locking mechanism, if necessary, to make sure the neoprene rubber stopper provides a tight closure.
- Wear necessary protective clothing and gear and observe required sampling precautions.
- Put the sampler in the open postion by placing the stopper rod handle in the T-position and pushing the rod down until the handle sits against the sampler's locking block.
- Slowly lower the Coliwasa sampler into the liquid at a rate that permits the levels of the Liquid inside and outside the sampler tube to be about the same. If the level of the liquid in the sampler tube is lower than that outside the sampler, the sampling rate is too fast and will result in a non-representative sample.
- When the sampler stopper hits the bottom of the liquid container, push the sampler tube downward against the stopper to close the sampler. Lock the sampler in the closed position by turning the T-handle until it is upright and one end rests tightly on the locking block.
- Slowly withdraw the sampler from the container with one hand while wiping the sampler tube with a disposable cloth with the other hand.
- Carefully discharge the sample into a glass container by slowly opening the sampler. This is done by slowly pulling the lower end of the T-handle away from the locking block while the lower end of the sampler is positioned in the glass container.
- Cap the glass container, attach a label and seal, record in the field log book, and complete the sample analysis request sheet and chain-of-custody record.
- Unscrew the T-handle of the sampler and disengage the locking block. Clean the sampler on-site or store the contaminated parts of the sampler in a plastic storage tube or bag for subsequent cleaning. Store used rags in plastic bags for subsequent disposal.

E.4.8.3. Sample Handling and Documentation

Soil and liquid samples will be anlayzed either at LANL or at a commerical laboratory. In either case, each sample will be labeled, sealed, and accompanied by a chain-of-custody and a sample analysis request form.

The sample container must be sealed with a gummed paper seal attached to the container in such a way that the seal must be broken in order to open the container. The seal and sample tag must be completed with a waterproof pen. An example of a sample seal is shown in Figure E.4.3.

The sample label is necessary to prevent misidentification of samples and shall include, if applicable, the grid number referenced to positions staked on the site perimeter. The field information in the case of soil sampling, shall include observations such as the soil texture and surface appearance, ambient temperature and cloud cover at time of sampling, and precipitation conditions 24 hours before sampling. An example of a sample label is shown in Figure E.4.4.

The chain-of-custody form is necessary to trace sample possession from the time of collection and must accompany every sample. This record becomes especially important when the sample is to be introduced as evidence in litigation. This is a two-page record with the original accompaning shipment and the copy retained by the Laboratory. An example of this form is shown in Figure E.4.5.

A separate closure sampling field log book will be kept and will contain all information pertinent to field surveys and sampling. The log book shall have bound and consecutively numbered pages in 8-l/1 by 11-inch format. Minimum entries include:

a. Purpose of sample (routine sampling, special sampling)

b. Location of sampling (coordinates referenced to staked field points, if soil sample)

c. Name and address of person making log entry

d. Type of process producing waste

e. Number and volume of sample

f. Description of each sampling location, sampling methodology, equipment used, etc.

g. Date and time of sample collection

h. Sample destination and transporter's name (name of laboratory, UPS, etc)

i. Map or phograph of the sampling site, if any

j. Field observations (ambient temperature, sky conditions, past 24-hour precipitation, etc)

k. Field measurements, if any (pH, flammability, conductivity, explosivity, etc).

l. Collector's sample identification number(s)

m. Signature of person responsible for the log entry.

Sampling situations vary widely. No general rule can be given as to the extent of information that must be entered in the log book. A good rule, however, is to record sufficient information so that someone can reconstruct the sampling situation without relying on the collector's memory.

The sample shipment and chain-of-custody record is accompanied by a sample analysis request sheet. The request sheet has two parts: field and laboratory. The field portion of this form must be completely by the person collecting the sample and include most of the pertinent information noted in the log book. The laboratory portion is intended to be completed by the laboratory personnel when the sample is received.

E.4.9. Quality Assurance/Quality Control

The Permittee shall designate a qualified individual or individuals to independently oversee the closure activities and report directly to senior management on the quality of the performance of this closure. This individual will personally observe a portion of the key activities, assure that sample blanks are used and analyzed and review the analysis reports for accuracy and adequacy. A written QA/QC plan in accordance with SW-846 guidance shall be prepared and followed, with variations from the plan documented and explained. The designated individual shall prepare a written statement for the final report commenting on the adequacy of the analysis showing decontamination.

E.4.10. Final Closure Report

Upon completion of the closure activities, the Permittee shall submit a Final Closure Report to the Director. The report shall document the final closure and contain, at a minimum, the following:

A. The certification described in paragraph E.3.6.
B. Any variance from the approved activities and the reason for the variance.
C. A tabular summary of all sampling results, showing:
    1. Sample identification
    2. Sampling location
    3. The datum reported,
    4. Detection limit for each datum,
    5. A measure of analytical precision (e.g. uncertainty, range, variance),
    6. Identification of analytical procedure, and
    7. Identification of analytical laboratory.
D. A QA/QC statement on the adequacy of the analyses and the decontamination determination.
E. The location of the file of supporting documentation:
    1. Field log books,
    2. Laboratory sample analysis reports,
    3. The QA/QC documentation, and
    4. Chain of custody records.
F. Disposal location of all regulated and nonregulated residues.
G. A certification of accuracy of the report.

TABLE E.4.1.

CLOSURE SCHEDULE

ACTIVITY	MAXIMUM TIME REQUIRED
PRECLOSURE	
Make decision to close	-380 Days
Characterize waste on hand	-360
Notify the EID	-360
Complete final incineration	-330
Survey the building for radioactivity	-320
Prepare preliminary decommissioning document	-150
Prepare final decommissioning document	-100
Let contract request for proposals	-90
Receive proposals	-30
Select contractor and award contract	-10
CLOSURE	
Begin closure activities	Day 0
Unit disassembly as required	Day 180
Internal washdown complete	Day 210
External washdown complete	Day 220
Floor washdown	Day 230
Final cleanup	Day 260
Decontamination verification	Day 310
Submit final report to EID	Day 360

NOTE: The calendar days given above are completion dates for each activity. In some cases more than one activity may occur simultaneously.

TABLE E.4.2.

ANALYTICAL PARAMETERS AND METHODS

METALS	ORGANICS
Arsenic	Halogenated volatile organics
Barium	Nonhalogenated volatile organics
Cadmium	Acid-extractable semivolatile organics
Selenium	Base-neutral extractable semivolatile organics
Lead	Phenols
Mercury	Organochlorine pesticides
Berylium	Chlorinated herbicides
Chromium	
Silver	
Nickel	

OTHER

Cyanides
Ignitability
Reactivity
pH

NOTES:

Analytical methods are taken from *Test Methods for Evaluating Solid Waste*, EPA SW 846, and may be superseded by more current methods from SW 846 or alternate EPA-approved methods.

Metals may be analyzed for total content. Any metal whose total concentration exceeds the standard for Extraction Procedure Toxicity shall be analyzed by Extraction Procedure Toxicity procedures. Both data shall be reported in the final report.

TABLE E.4.3.

SAMPLING SUMMARY

MATERIAL SAMPLED	METALS	ORGANICS	OTHER
Washwater before use	X	X	X
Washwater after use	X	X	X
Solid wastes & residues	X	X	X
Protective clothing washwater		X	

NOTE:

Analytical parameters are given in Table E.4.2.

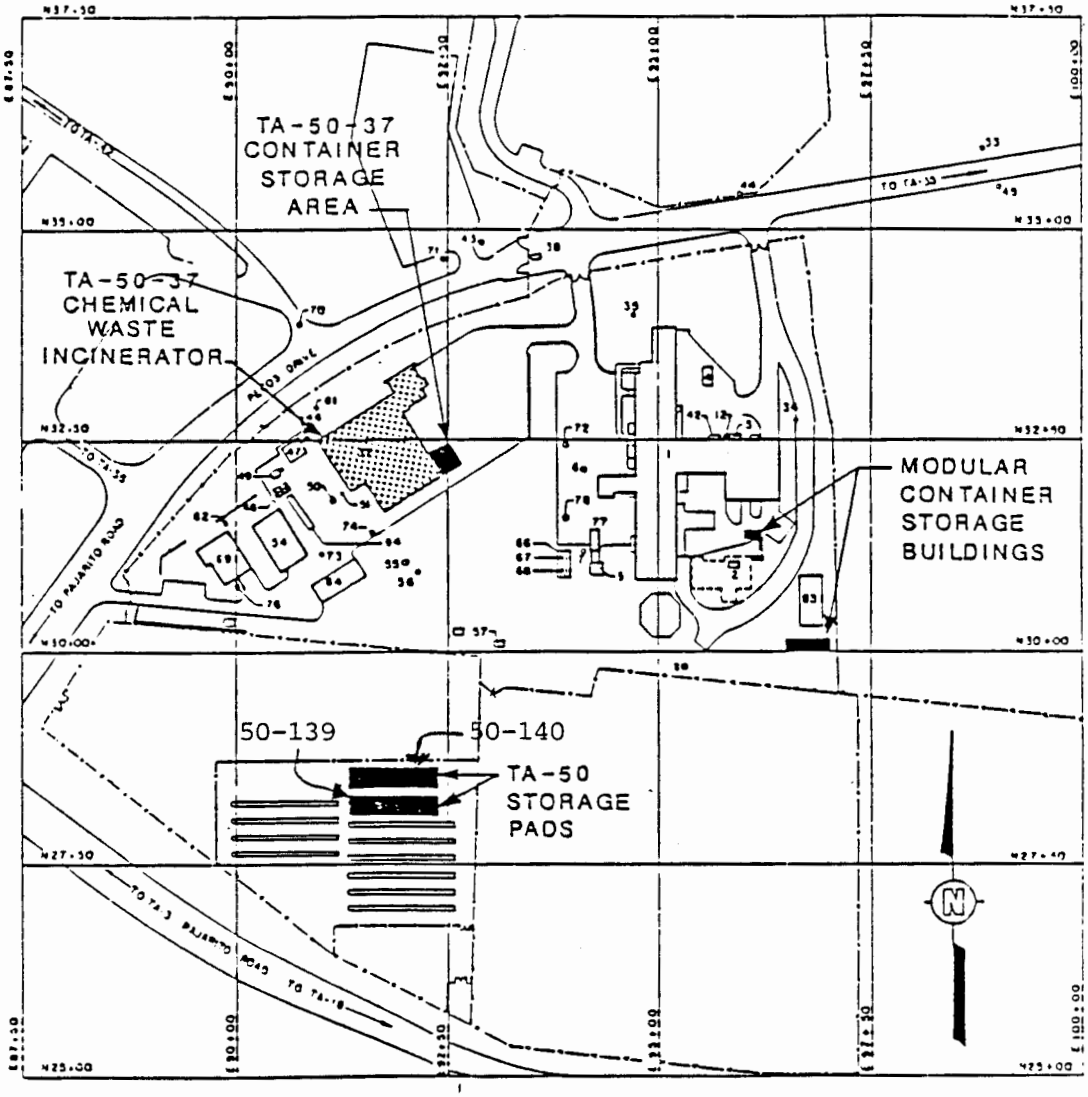

FIGURE E.4.1

LOCATIONS OF TA-50
CHEMICAL WASTE INCINERATOR
AND CONTAINER STORAGE
UNITS

PREPARED FOR

LOS ALAMOS
NATIONAL LABORATORY
LOS ALAMOS, NEW MEXICO

INTERNATIONAL
TECHNOLOGY
CORPORATION

© 1984 IT CORPORATION
ALL COPYRIGHTS RESERVED

Do Not Scale This Drawing

KCT 10/11/88 | CHECKED BY | APPROVED BY | DRAWING NUMBER 3

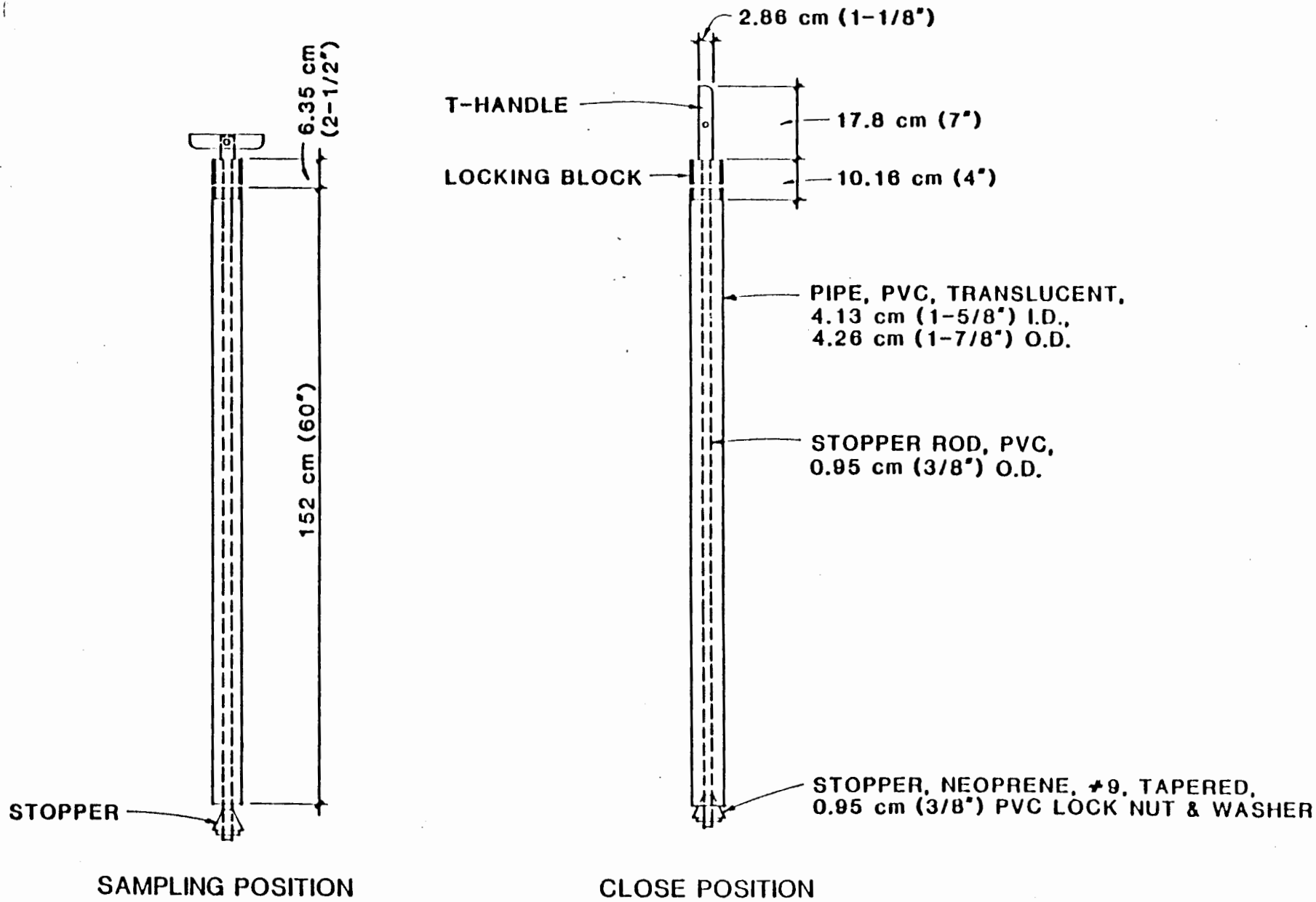

FIGURE E-42 COMPOSITE LIQUID WASTE SAMPLER (COLIWASA)

FIGURE E-4.3
EXAMPLE OF SAMPLE SEAL

OFFICIAL SAMPLE SEAL

Collected by _____ Collector's Sample No._____
(Signature)

Date Collected_____ Time Collected_____

Place Collected_____

_____

_____

FIGURE E-4.4
EXAMPLE OF SAMPLE LABEL

OFFICIAL SAMPLE LABEL

Collector_____ Collector's Sample No._____

Place. of Collection_____

_____

Date Sampled_____ Time Sampled_____

Field Information_____

_____

_____

FIGURE E-4.5
CHAIN OF CUSTODY RECORD

Hazardous Materials
Collector's Sample No.___

Location of Sampling: __Producer __Hauler
__Disposal Site
__Other:_____

_____

Company's Name _____Telephone (___)_____

Address_____
number street city state zip

Collector's Name_____Telephone (___)_____
signature

Date Sampled_____Time Sampled_____hours

Type of Process Producing Waste_____

Waste Type Code_____Other_____

Field Information_____

_____

_____

Sample Allocation:

1. _____
name of organization

2. _____
name of organization

3. _____
name of organization

Chain of Possession:

1. _____ _____ _____
signature title inclusive dates

2. _____ _____ _____
signature title inclusive dates

3. _____ _____ _____
signature title inclusive dates

CLOSURE PLAN
PERMIT ATTACHMENT E.5
NM 0980010515-1

E.5. Chemical Waste Incinerator Container Storage Area

Contained wastes to be incinerated are stored in Room 117 of Building 37, TA-50 (Figure E.5.1). The storage area has a concrete floor with a grated false floor sixteen inches above the concrete. The concrete is coated with Semstone (@). Liquid and solid contained compatible wastes are stored in the area. The waste containers are predominately 55-gallon drums and 330-gallon polyethylene containers, all meeting Department of Transportation (DOT) specifications. Solid wastes may be stored in boxes.

E.5.2. Estimate of Maximum Waste in Storage and Treatment

The maximum inventory of hazardous wastes stored at the TA-50 waste incinerator is estimated at 13 cubic meters (solid wastes plus 3630 gallons of liquids).

E.5.3. Description of Waste Handled

The Laboratory wastes are a mixture of liquid and solid hazardous wastes composed of various organic solvents and liquids as well as chemically contaminated paper, wood, and plastics. The liquids can contain either ignitable or listed wastes containing HWMR-5, Part II, Appendix VIII constituents. The incinerator is fed all HWMR-5, Part II, Appendix VIII constituents with an incinerability ranking equal to or better than carbon tetrachloride.

E.5.4. Closure Procedure

E.5.4.1. Partial Closure

Partial closure of this unit is not expected to occur.

E.5.4.2. Final Closure

Personnel involved in decontaminating the storage area will wear protective equipment, including, acid/solvent resistant coveralls, head protection, neoprene coated gloves, and boots, Wrists and ankles are to be taped to protect against upward and inward splash. As a minimum protection, face shields will be worn. Full face respirators or other protective equipment will be used if specified by the Laboratory's Industrial Hygiene Group, HSE-5, following a field inspection.

All remaining wastes will be incinerated before closing the storage area. If for some reason it is not possible to incinerate all the waste on the site, the waste will be sent to a designated off site treatment or disposal facility.

Following removal of all stored waste, the floor and grate of Room 117 will be washed and rinsed with a warm Liquinox(@) and Alconox(@) solution in water. The wash water will be picked up and put into approved DOT containers using a drum

pump, rags and/or mops, wringing the excess water into an approved DOT container. This water will be sampled to demonstrate decontamination and transferred to TA-54, Area L for sampling, analysis and off site disposal at a permitted facility.

The protective clothing and tools used during the wash down will be cleaned with detergent and water. The wash water will be collected and analyzed. If the wash water is not hazardous, the water will be discharged to the industrial waste water sewer. If the wash water contains hazardous constituents, it will be treated on site or transported off site to a permitted facility. Mops and rags used for clean up will be placed in approved DOT containers for transport to TA-54, Area L, for sampling, analysis, storage and off site disposal at a permitted facility.

E.5.5. Decontamination Verification

Before the first wash down, two samples will be taken of the clean Liquinox(@) or Alconox(@) solution in water and analyzed for the constituents listed in Table E.5.2. One additional clean solution sample will be taken for each additional wash down event. These analytical results provide background data for decontamination verification.

Dirty wash down solutions will also be analyzed for the constituents listed in Table E.5.2. Analytical procedures will conform to methods found in SW 846. Equipment will be considered to be contaminated if the used wash solutions show a significant increase in the listed constituents over the clean wash solution.

Successful decontamination is defined as:

1. No detectable hazardous constituents in the final sample, or
2. Detectable hazardous constituents in the final sample are equal to or less than, at the 0.01 confidence level, their concentration in the unused wash water or background sample.

An alternative demonstration of decontamination may be proposed and justified at the time of closure as circumstances indicate. The Director will evaluate the proposed alternative in accordance with the standards and guidance then in effect and, if approved, incorporate by permit modification the alternative into the closure plan.

E.5.6. Closure Schedule

Characterization of the final delivery of hazardous waste may require up to 30 days. An estimated 60 days will be required to schedule and process the final wastes received. The year of closure for the TA-50-37 container storage area is 2100. Closure will observe the schedule given in Table E.5.1.

E.5.7. Closure Certification

An independent registered professional engineer and the Permittee shall witness the closure and ensure that the closure follows this plan. Upon completion of closure, the engineer and the DOE shall prepare a letter certifying that the facility has been closed in accordance with this plan. The letter shall be dated and signed by each party, stamped by the registered engineer, and the original copy submitted by the DOE to the Director of NMEID. One copy shall be maintained at the DOE office and one copy maintained by the HSE-8 Regulatory Compliance Section.

E.5.8. Sampling and Analytical Procedure

The following section defines procedures and methods for sampling, analysis and documentation applicable to closure plans. While the procedures and method are specific, any applicable procedure or method given in SW-846 may be used if conditions or experience shows the alternate method to be more appropriate. Disposable samplers may be used.

Sample containers appropriate for the requested analyses will be used for all samples. Sampling will be conducted in accordance with procedures given in Samplers and Sampling Procedures for Hazardous Waste Streams, EPA 600/2-80-018 and/or SW-846.

Samples will be taken, placed in bottles, sealed, tagged, and immediately packed in vermiculite, sawdust, or, if refrigeration is required, an insulated container with ice. One sample for every ten samples will be either duplicated or split. The duplicated or split sample will be identified by a code so that its source is not available to the analytical laboratory, but analytical results can be compared to its twin.

E.5.8.1. Soil and solid residue Sampling

Under normal circumstances soil sampling will be inapplicable. If, however, a spill should occur outside the building, sufficient sampling and analysis will be required to ensure that hazardous constituents do not remain after closure. The sampling procedures outlined below are used to determine the amount of hazardous material deposited on a particular area of land, or to determine the leaching rate of the material, or determine the residue level on the soil. Adequate preparation ensures that proper sampling is accomplished.

Units emplaced over impervious surfaces, concrete or asphalt, need not be sampled for spill residues from past handling practices. Units emplaced over absorbent surfaces such as soil will have a minimum of three soil samples to a depth of six inches taken in the area of each access door. The samples will be separately analyzed for the parameters in Table E.3.2. If contamination is discovered, a three foot grid centered on the locus of contaminated points will be sited and samples taken and analyzed to determine the extent of contamination. Analyses for this investigation can be made for the constituent(s) found in the initial survey. All contaminated soils shall be removed.

Surface soil samples will be collected with a trowel or scoop. To sample below 3 in. (8 cm), samples will be collected with a Veihmeyer soil sampler. Solid residues in drums will also be sampled with a core sampler or Veihmeyer sampler. Drums not able to be sampled will be assumed to be hazardous waste.

E.5.8.1.1. Cleaning of Sampler

It is important to clean the samplers after each site is sampled. An unused disposable sampler may be presumed clean if still in a factory sealed wrapper. Unsealed samplers will be cleaned prior to use. The samplers will be washed with a warm Liquinox(@) or Alconox(@) solution, rinsed several times with tap water, rinsed with distilled water, drained of excess water, and air-dried or wiped dry. Prevention of cross contamination is of particular importance in these samples.

E.5.8.1.2. Sampling Procedures

Trowel or Scoop

- Take small, equal portions of sample from the surface or near the surface of the material to be sampled.
- Combine the samples in a glass container.
- Cap the container, attach a label and seal, record in field log book, and complete the sample analysis request sheet and chain-of-custody record.

Veihmeyer Sampler

- Assemble the sampler by screwing in the tip and drive head on the sampling tube.
- Insert the tapered handle (drive guide) of the drive hammer through the drive head.
- Place the sampler in a perpendicular position on the material to be sampled.
- With the left hand holding the tube, drive the sampler into the material to the desired sampling depth by pounding the drive head with the drive hammer. Do not drive the tube further than the tip of the hammer's drive guide.
- Record the length of the tube that penetrated the material.
- Move the drive hammer onto the drive head. In this position, the hammer serves as a handle for the sampler.
- Rotate the sampler at least two revolutions to shear off the sample at the bottom.
- Lower the sampler handle (hammer) until it just clears the two ear-like protrusions on the drive head and rotate about 90 degrees.
- Withdraw the sampler from the material by pulling the handle (hammer) upwards. When the sampler cannot be withdrawn by hand, as in deep soil sampling, use a pullerjack and grip.
- Dislodge the hammer from the sampler, turn the sampler tube upside down, tap the head gently against the hammer, and carefully recover the sample from the tube. The sample should slip out easily.
- Store the core sample in a 1,000 or 2,000 ml (1 qt or l/2 gal) sample container.
- Label the sample, affix the seals, record in the field log book, complete the sample analysis request sheet and chain-of-custody record, and deliver the samples to the laboratory for analysis.

E.5.8.2. Liquid Sampling

A Coliwasa sampler or similar device will be used to sample water solutions in order to determine background parameters before washing the area; it will also be used to sample the dirty wash water used in cleaning equipment. The recommended model of the Coliwasa is shown in Figure E.5.2, the main parts consisting of the sampling tube, the closure-locking mechanism, and the closure system. As an alternative to the Coliwasa, glass tubes may be used to sample liquids. The primary advantage in using a glass tube is that the tube will be disposed of as hazardous waste after each sample is collected, thus eliminating the potential for cross contamination.

E.8.8.2.1. Cleaning of Sampler

The sampler must be clean before use. An unused disposable sampler may be presumed clean if still in a factory sealed wrapper. Unsealed samplers will be cleaned prior to use. The used sampler must be washed with a warm detergent solution (Liquinox(@) or Alconox(@)), rinsed several times with tap water, rinsed with distilled water, drained of excess water, and air-dried or wiped dry. A necessary piece of equipment for cleaning the tube of the Coliwasa is a bottle brush that fits tightly inside the diameter of the tube. The brush is connected to a rod of sufficient length to reach the entire length of the sampler tube. Using the ramrod and fiber reinforced paper towels, the Coliwasa tube may be quickly cleaned. Improper cleaning of sample equipment will cause cross contamination of samples. Prevention of contamination is of particular importance in these samples. Clean samplers should be stored in polyethylene plastic tubes or bags in a clean an protected area.

E.5.8.2.2. Sampling Procedures

- Assemble the Coliwasa sampler.
- Make sure that the Coliwasa sampler is clean.
- Check to make sure the sampler is functioning properly. Adjust the locking mechanism, if necessary, to make sure the neoprene rubber stopper provides a tight closure.
- Wear necessary protective clothing and gear and observe required sampling precautions.
- Put the sampler in the open position by placing the stopper rod handle in the T-position and pushing the rod down until the handle sits against the sampler's locking block.
- Slowly lower the Coliwasa sampler into the liquid at a rate that permits the levels of the Liquid inside and outside the sampler tube to be about the same. If the level of the liquid in the sampler tube is lower than that outside the sampler, the sampling rate is too fast and will result in a non-representative sample.
- When the sampler stopper hits the bottom of the liquid container, push the sampler tube downward against the stopper to close the sampler. Lock the sampler in the closed position by turning the T-handle until it is upright and one end rests tightly on the locking block.

- Slowly withdraw the sampler from the container with one hand while wiping the sampler tube with a disposable cloth with the other hand.

- Carefully discharge the sample into a glass container by slowly opening the sampler. This is done by slowly pulling the lower end of the T-handle away from the locking block while the lower end of the sampler is positioned in the glass container.

- Cap the glass container, attach a label and seal, record in the field log book, and complete the sample analysis request sheet and chain-of-custody record.

- Unscrew the T-handle of the sampler and disengage the locking block. Clean the sampler on site or store the contaminated parts of the sampler in a plastic storage tube or bag for subsequent cleaning. Store used rags in plastic bags for subsequent disposal.

E.5.8.3 Sample Handling and Documentation

Soil and liquid samples will be analyzed either at LANL or at a commercial laboratory. In either case, each sample will be labeled, sealed, and accompanied by a chain-of-custody and a sample analysis request form.

The sample container must be sealed with a gummed paper seal attached to the container in such a way that the seal must be broken in order to open the container. The seal and sample tag must be completed with a waterproof pen. An example of a sample seal is shown in Figure E.5.3.

The sample label is necessary to prevent misidentification of samples and shall include, if applicable, the grid number referenced to positions staked on the site perimeter. The "field information" in the case of soil sampling, shall include observations such as the soil texture and surface appearance, ambient temperature and cloud cover at time of sampling, and precipitation conditions 24 hours before sampling. An example of a sample label is shown in Figure E.5.4.

The chain-of-custody form is necessary to trace sample possession from the time of collection and must accompany every sample. This record becomes especially important when the sample is to be introduced as evidence in litigation. This is a two page record with the original accompanying shipment and the "copy" retained by the Laboratory. An example of this form is shown in Figure E.5.5.

A separate closure sampling field log book will be kept and will contain all information pertinent to field surveys and sampling. The log book shall have bound and consecutively numbered pages in 8-l/1 by 11-inch format. Minimum entries include:

a. Purpose of sample (routine sampling, special sampling),

b. Location of sampling (coordinates referenced to staked field points, if soil sample),

c. Name and address of person making log entry,

d. Type of process producing waste,

e. Number and volume of sample,

f. Description of each sampling location, sampling methodology, equipment used, etc,

g. Date and time of sample collection,

h. Sample destination and transporter's name (name of laboratory, UPS, etc),

i. Map or photograph of the sampling site, if any,

j. Field observations (ambient temperature, sky conditions, past 24-hour precipitation, etc),

k. Field measurements, if any (pH, flammability, conductivity, explosivity, etc),

l. Collector's sample identification number(s), and

m. Signature of person responsible for the log entry.

Sampling situations vary widely. No general rule can be given as to the extent of information that must be entered in the log book. A good rule, however, is to record sufficient information so that someone can reconstruct the sampling situation without relying on the collector's memory.

The sample shipment and chain-of-custody record is accompanied by a sample analysis request sheet. The request sheet has two parts: field and laboratory. The field portion of this form must be completely by the person collecting the sample and include most of the pertinent information noted in the log book. The laboratory portion is intended to be completed by the laboratory personnel when the sample is received.

E.5.9. Quality Assurance/Quality Control

The Permittee shall designate a qualified individual or individuals to independently oversee the closure activities and report directly to senior management on the quality of the performance of this closure. This individual will personally observe a portion of the key activities, assure that sample blanks are used and analyzed and review the analysis reports for accuracy and adequacy. A written QA/QC plan shall be prepared and followed, with variations from the plan documented and explained. The designated individual shall prepare a written statement for the final report commenting on the adequacy of the analysis showing decontamination.

E.5.10. Final Closure Report

Upon completion of the closure activities, the Permittee shall submit a Final Closure Report to the Director. The report shall document the final closure and contain, at a minimum, the following:

A. The certification described in paragraph E.5.7.

B. Any variance from the approved activities and the reason for the variance.

C. A tabular summary of all sampling results, showing:

1. Sample identification
2. Sampling location
3. The datum reported,
4. Detection limit for each datum,
5. A measure of analytical precision (e.g. uncertainty, range, variance),
6. Identification of analytical procedure, and
7. Identification of analytical laboratory.

D. A QA/QC statement on the adequacy of the analyses and decontamination demonstration.

E. The location of the file of supporting documentation:

1. Field log books,
2. Laboratory sample analysis reports,
3. The QA/QC documentation, and
4. Chain of custody records.

F. Disposal location of all regulated and unregulated residues.

G. A certification of accuracy of the report.

TABLE E.5.1.

CLOSURE SCHEDULE

ACTIVITY	MAXIMUM TIME REQUIRED
Notify EID of closure	-90 Days
Advertise for proposals	-90 Days
Receive proposals	-30 Days
Select contractor and award contract	-10 Days
Begin closure activities	Day 0
Characterize remaining wastes	Day 30
Complete incineration of wastes	Day 60
Removal of wastes	Day 60
Floor wash down	Day 75
Analyze samples	Day 120
Final clean up	Day 130
Decontamination verification	Day 150
Submit final report to EID	Day 180

NOTE:

The schedule above indicates calendar days from the beginning by which activities will be completed. Some activities may be conducted simultaneously.

TABLE E.5.2.

ANALYTICAL PARAMETERS

METALS	ORGANICS
Arsenic	Halogenated volatile organics
Barium	Nonhalogenated volatile organics
Cadmium	Acid-extractable semivolatile organics
Selenium	Base-neutral extractable semivolatile organics
Lead	Phenols
Mercury	Organochlorine pesticides
Berylium	Chloronated herbicides
Chromium	
Silver	
Nickel	

OTHER

Cyanides
Ignitability
Reactivity
pH

NOTES

Analytical methods are taken from *Test Methods for Evaluating Solid Waste*, EPA SW-846, and may be superseded by more current methods from SW-846 or alternate EPA-approved methods.

Metals may be analyzed for total content. Any metal whose total concentration exceeds the standard for Extraction Procedure Toxicity shall be analyzed by Extraction Procedure Toxicity procedures. Both data shall be reported in the final report.

TABLE E.5.3
SAMPLING SUMMARY

MATERIAL SAMPLED	METALS	ORGANICS	OTHER
Washwater before use	X	X	X
Washwater after use	X	X	X
Protective clothing washwater		X	
Soil samples *	X	X	X

NOTE:

Analytical parameters are given in Table E.5.2.

* As required. See paragraph E.5.8.1.

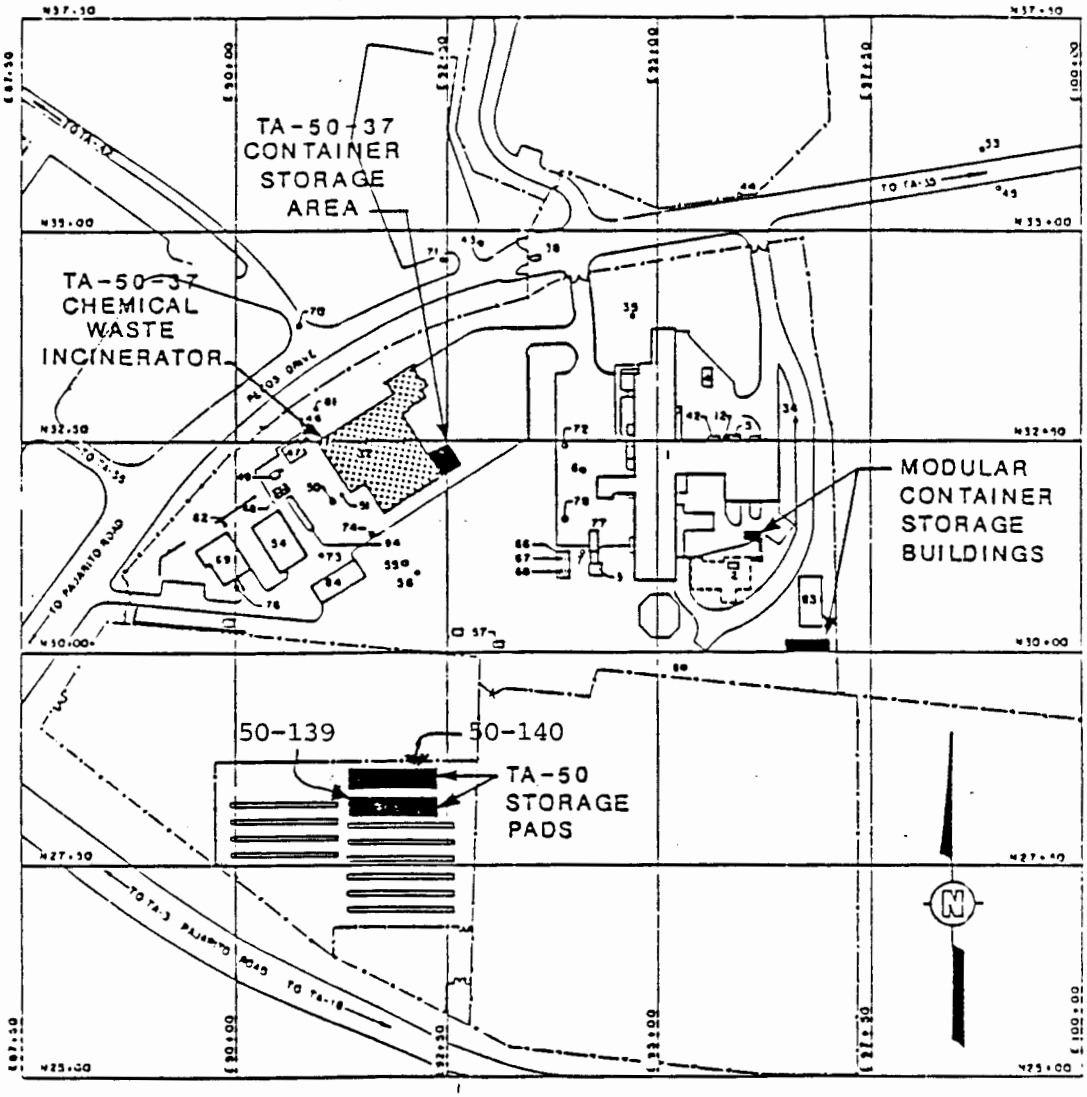

FIGURE E.5.1

LOCATIONS OF TA-50
CHEMICAL WASTE INCINERATOR
AND CONTAINER STORAGE
UNITS

PREPARED FOR

LOS ALAMOS
NATIONAL LABORATORY
LOS ALAMOS, NEW MEXICO

INTERNATIONAL
TECHNOLOGY
CORPORATION

© 1984 IT CORPORATION
ALL COPYRIGHTS RESERVED

Do Not Scale This Drawing

DF	KCT 10/11/88	CHECKED BY / APPROVED BY	12/19/88 10/24/88	DRAWING NUMBER 3	02 09 A6

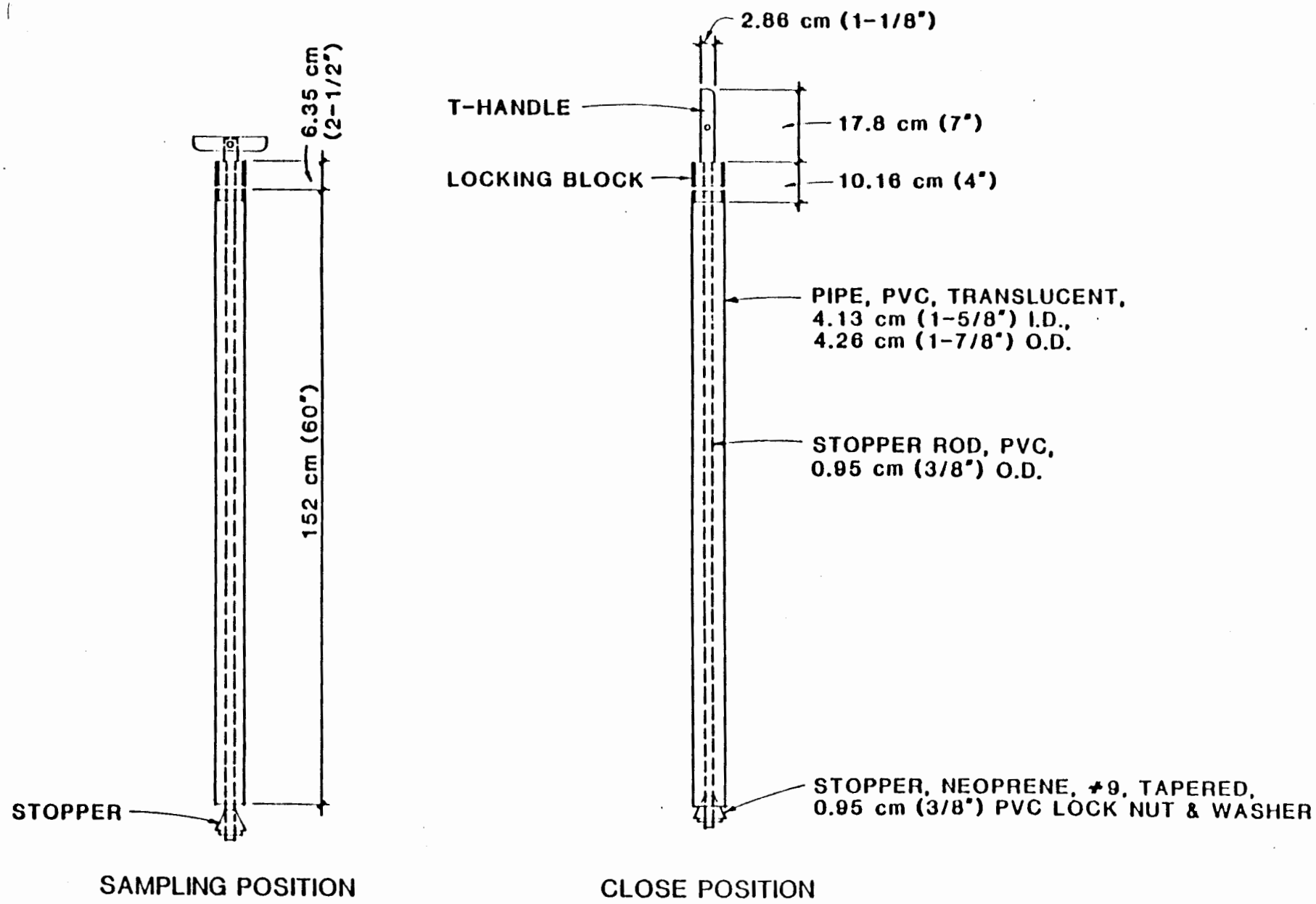

FIGURE E-52 COMPOSITE LIQUID WASTE SAMPLER (COLIWASA)

FIGURE E-5.3
EXAMPLE OF SAMPLE SEAL

OFFICIAL SAMPLE SEAL

Collected by _____ Collector's Sample No._____
(Signature)

Date Collected_____ Time Collected_____

Place Collected_____

_____

_____

FIGURE E-5.4
EXAMPLE OF SAMPLE LABEL

OFFICIAL SAMPLE LABEL

Collector_____ Collector's Sample No._____

Place. of Collection_____

_____

Date Sampled_____ Time Sampled_____

Field Information_____

_____

_____

FIGURE E-5
CHAIN OF CUSTODY RECORD

Hazardous Materials
Collector's Sample No.___

Location of Sampling: __Producer __Hauler
__Disposal Site
__Other:_____

_____

Company's Name _____Telephone (___)_____

Address_____
number street city state zip

Collector's Name_____Telephone (___)_____
signature

Date Sampled_____Time Sampled_____hours

Type of Process Producing Waste_____

Waste Type Code_____Other_____

Field Information_____

_____

_____

Sample Allocation:

1. _____
name of organization

2. _____
name of organization

3. _____
name of organization

Chain of Possession:

1. _____ _____ _____
signature title inclusive dates

2. _____ _____ _____
signature title inclusive dates

3. _____ _____ _____
signature title inclusive dates

CLOSURE PLAN
PERMIT ATTACHMENT E.6
NM 0890010515-1

E.6. Closure for TA-54 Area L Hazardous Waste Transfer/Storage Unit

E.6.1. TA-54 Area L Description

The storage unit consists of a single-story transfer / storage building, Facility Number 54-31, encompassing 196 square feet. Liquid wastes are segregated into compatible types and placed upon one of the three fiberglass grates inside the building. This closure plan applies to the transfer / storage unit only.

The remainder of TA-54 Area L consists of liquid waste storage and treatment tanks, a roofed concrete containment structure, two modular storage units and specified areas within the fenced portions of Area L for storage of solid containerized waste. These areas are used for the accumulation, packaging, and storage of waste containers, which are generated throughout the laboratory and delivered to Area L routinely. Wastes in small containers are stored in the modular units before being put into lab-packs. Wastes suitable for recycling are consolidated into drums, and any damaged or leaking drums are repackaged into larger drums in this area. Solid containerized wastes are stored in cleared areas within the fenced portions of Area L. Four treatment/storage tanks are also located at Area L. They are used to neutralize, oxidize, and evaporate waste. The tanks are located on a bermed concrete pad. Each of these units has a separate closure plan.

E.6.2. Estimate of Maximum Waste in Storage and Treatment

The maximum amount of waste stored in the transfer/storage building at Area L is 440 gallons. Small quantities in excess of this amount may be temporarily present on any one day while actively being handled.

E.6.3. Description of Waste Handled

A wide variety of wastes generated throughout the Laboratory are brought to Area L, including wastes from basic and applied chemistry R & D programs (small quantities of different acids, bases, organics, inorganics and reactive transfer/storages), processing wastes (sludge resulting from treatment either at Area L or at TA 50-1 Batch Treatment Plant), and chemically contaminated equipment, to be stored, recycled, treated or packed for off site disposal at a permitted facility. Any characteristic or listed waste used at the laboratory could have been handled at one time in the transfer/storage unit.

E.6.4. Partial Closure

No partial closure of the transfer / storage unit is anticipated.

E.6.5. Closure Procedure

Before decontamination, all wastes in storage will either be treated on site or disposed of off site. Given the diversity of wastes handled, it is not possible to estimate the exact wastes on hand at the initiation of closure and, therefore, the

final dispostion of the wastes. In general, recyclable wastes will be reused internally or recycled to users off site. Permitted wastes will be burned at the permitted incinerator at TA-50-37. Any wastes comptaible with permitted treatment at the TA-50-1 Batch Waste Treatment Unit or the TA-54, Area L treatment tanks will be so treated. The remaining wastes will be transported off site to a permitted disposal facility. If on site treatment is not possible due to prior closure of the permitted units, off site disposal will occur.

Following removal of the wastes, the transfer/storage building will be decontaminated by washing with Liquinox(@) or Alconox(@) in water. The resulting used wash solution will be placed in approved DOT containers, sampled, analyzed and transported off site to a permitted treatment or disposal facility.

E.6.5.1. Waste Removal

The waste on site at the start of closure includes wastes in all size containers, from vials and ampules to 55 gallon drums. Contained wastes will be handled with hand trucks or forklifts as necessary. Trucks of adequate size will be used to move packed wastes to off site treatment or disposal facilities, and a forklift is suitable for loading the trucks or to move wastes to the treatment tanks at Area L. All wastes shipped off site will be in approved Department of Transportation (DOT) containers and manifested in accordance with the facility permit. All waste transporters will have an EPA identification number in accordance with HWMR-5, Part IV, Section 263.11.

E.6.5.2. Decontamination

All floor and wall surfaces, as well as any equipment present, will be washed down using a solution of Liquinox(@) or Alconox(@) in warm water. Areas will be scraped or brushed clean as necessary to remove any residues. The floor is sloped to sumps, and wash water will flow into them. The water in each sump will be tested using the sampling and analytical procedures described in section E.6.9. Afterwards, the water will be removed from each sump with a vacuum truck or pumped into drums with a hand pump, sampled, analyzed and transported off site for treatment or disposal. This washing procedure will be repeated until decontamination of the cells is demonstrated by testing of the wash water. Following decontamination, the building and equipment will be handled as nonregulated waste. The inside of the vacuum truck, if used, will be rinsed when its service is complete and the rinse water will be placed in approved DOT containers for off site treatment or disposal. Every effort will be made to minimize the volume of wash and rinse water generated by decontamination.

E.6.5.3. Soil Decontamination

Soil sampling will be conducted to determine if hazardous wastes have been tracked outside of contaminated areas, as described in section E.6.9. After the building is decontaminated, it will be removed and three soil samples, one under each sump, will be collected. Three soil samples will be taken at each edge of the asphalt apron around the transfer/storage building. Each will be made up of cores six inches deep taken six inches off the asphalt edge and equally spaced to cover each edge.

If contamination is found in any of these samples, the limits of the sampling area will be expanded by establishing a three foot sampling grid around a single contamination point, or centered on the area defined by the locus of multiple

contamination points, to determine the outside perimeter of the contamination. Sampling will be continued until the extent of contamination is determined. Background samples will be taken in the same manner as the initial closure soil survey.

Once the limits of the contaminated area are determined, the contaminated soil will then be removed to a depth of 6 inches and handled as a regulated waste. The adequacy of decontamination is determined by additional sampling. Sampling, analysis, and documentation procedures are detailed in section E.6.9. In order to demonstrate final decontamination, soil samples will be analyzed for all HWMR-5, Part V, Section 264, Appendix IX constituents. Analysis and quality assurance/quality control will follow methods defined in SW-846.

E.6.5.5. Personnel Protection

Personnel who are washing equipment will wear rubber gloves, neoprene acid/solvent resistant coveralls, rubber boots, and a face shied. The Laboratory's Industrial Hygiene Group (HSE-5) will review the site survey analytical data and may recommend addtional protective clothing.

E.6.5.6. Equipment Decontamination

Shovels, drum trucks and other equipment used for decontamination will be scraped and brushed to remove residue, and the residue collected will be placed in drums for disposal off site at a permitted facility. The equipment will be placed on a 30 mil plastic sheet that is bermed to contain liquids and pressure washed with water and detergent. Large equipment such as backhoes and forklifts will also be washed. Testing will be performed on this water to determine if decontamination is adequate. Washing is considered adequate to decontaminate the equipment. The wash water will be placed in the treatment tanks to evaporate and the plastic lining and residue will be packed in DOT approved containers for off site disposal at a permitted facility. If evaporation is not an available treatment, the wastes will be packed and shipped off site for treatment and disposal.

E.6.6. Decontamination Verification

A minimum of two samples of the clean Liquinox(@) or Alconox(@) solution will be sampled as background for wash water and, along with the wash water samples, analyzed for the constituents listed in HWMR-5, Part V, Section 264, Appendix IX. Successful decontamination is defined as:

1. No detectable hazardous constituents in the final sample, or

2. Detectable hazardous constituents in the final sample are equal to or less than, at the 0.01 confidence level, their concentration in the unused washwater or background sample. Hazardous constituents detected in the background sample will invalidate that sample as true background unless adequate explanation of their source is provided.

An alternative demonstration of decontamination may be proposed and justified at the time of closure as circumstances indicate. The Director will evaluate the proposed alternative in accordance with the standards and guidance then in effect and, if approved, incorporate by permit modification the alternative into the closure plan.

E.6.7. Closure Schedule

The year of closure is 2100. Contracting and closure activities will observe the schedule given in Table E.6.1. Closure is estimated to take 340 days. Soil sampling and the decontamination contractor selection may be completed before closure begins. Several of the closure steps may occur simultaneously.

Contracts for analytical work and, if necessary, soil removal are expected to exceed $100,000. The Laboratory is required by policy to put the work out for bid, and ninety days are required to solicit and process the bids. The location of the site is prone to snow cover in the winter months. The closure may be delayed until the site is free of snow and the ground is thawed adequately to allow the soil sampling and other closure operations. The schedule includes a weather factor to allow for this delay.

E.6.8. Closure Certification

An independent, registered professional engineer and the Permittee shall witness the closure and ensure that the closure follows this plan. Upon completion of closure, the engineer and the DOE shall prepare a letter certifying that the facility has been closed in accordance with this plan. The letter shall be dated and signed by each party, stamped by the registered engineer, and the original copy submitted by the DOE to the Director of the NMEID. One copy shall be maintained at the DOE office and one copy maintained by the HSE-8 Regulatory Compliance Section.

E.6.9. Sampling and Analytical Procedure

The following section defines procedures and methods for sampling, analysis and documentation applicable to closure plans. While the procedures and method are specific, any applicable procedure or method given in SW-846 or other EPA-approved procedure may be used if conditions or experience shows the alternate method to be more appropriate. Disposable samplers may be used.

Sample containers appropriate for the requested analyses will be used for all samples. Sampling will be conducted in accordance with procedures given in Samplers and Sampling Procedures for Hazardous Waste Streams, EPA 600/2-80-018 and/or SW-846.

Samples will be taken, placed in bottles, sealed, tagged, and immediately packed in vermiculite, sawdust, or, if refrigeration is required, an insulated container with ice. One sample for every ten samples will be either duplicated or split. The duplicated or split sample will be identified by a code so that its source is not available to the analytical laboratory, but analytical results can be compared to its twin.

E.6.9.1. Soil and Solid Residues Sampling

The sampling procedures outlined below are used to determine the amount of hazardous material deposited on a particular area of land, or to determine the leaching rate of the material, or determine the residue level on the soil. Adequate preparation ensures that proper sampling is accomplished.

Surface soil samples will be collected with a trowel or scoop. To sample below 3 in. (8 cm), samples will be collected with a Veihmeyer soil sampler. Drums of solid

residues will be sampled with a core sampler or Veihmeyer soil sampler. Drums not capable of being sampled will be assumed to be reactive hazardous waste.

E.6.9.1.1. Cleaning of Sampler

It is important to clean the samplers after each site is sampled. An unused disposable sampler may be presumed clean if still in a factory sealed wrapper. Unsealed samplers will be cleaned prior to use. The samplers will be washed with a warm Liquinox(@) or Alconox(@) solution, rinsed several times with tap water, rinsed with distilled water, drained of excess water, and air-dried or wiped dry. Prevention of cross contamination is of particular importance in these samples.

E.6.9.1.2. Sampling Procedures

Trowel or Scoop

- Take small, equal portions of sample from the surface or near the surface of the material to be sampled.
- Combine the samples in a glass container.
- Cap the container, attach a label and seal, record in field log book, and complete the sample analysis request sheet and chain-of-custody record.

Veihmeyer Sampler

- Assemble the sampler by screwing in the tip and drive head on the sampling tube.
- Insert the tapered handle (drive guide) of the drive hammer through the drive head.
- Place the sampler in a perpendicular position on the material to be sampled.
- With the left hand holding the tube, drive the sampler into the material to the desired sampling depth by pounding the drive head with the drive hammer. Do not drive the tube further than the tip of the hammer's drive guide.
- Record the length of the tube that penetrated the material.
- Move the drive hammer onto the drive head. In this position, the hammer serves as a handle for the sampler.
- Rotate the sampler at least two revolutions to shear off the sample at the bottom.
- Lower the sampler handle (hammer) until it just clears the two ear-like protrusions on the drive head and rotate about 90 degrees.
- Withdraw the sampler from the material by pulling the handle (hammer) upwards. When the sampler cannot be withdrawn by hand, as in deep soil sampling, use a pullerjack and grip.

- Dislodge the hammer from the sampler, turn the sampler tube upside down, tap the head gently against the hammer, and carefully recover the sample from the tube. The sample should slip out easily.

- Store the core sample in a 1,000 or 2,000 ml (1 qt or l/2 gal) sample container.

- Label the sample, affix the seals, record in the field log book, complete the sample analysis request sheet and chain-of-custody record, and deliver the samples to the laboratory for analysis.

E.6.9.2. Liquid Sampling

A Coliwasa sampler or similar device will be used to sample water solutions in order to determine background parameters before washing the area; it will also be used to sample the dirty wash water used in cleaning equipment. The recommended model of the Coliwasa is shown in Figure E.6.2., the main parts consisting of the sampling tube, the closure-locking mechanism, and the closure system. As an alternative to the Coliwasa, glass tubes may be used to sample liquids. The primary advantage in using a glass tube is that the tube will be disposed of as hazardous waste after each sample is collected, thus eliminating the potential for cross contamination.

E.6.9.2.1. Cleaning of Sampler

The sampler must be clean before use. An unused disposable sampler may be presumed clean if still in a factory sealed wrapper. Unsealed samplers will be cleaned prior to use. The used sampler must be washed with a warm detergent solution (Liquinox(@) or Alconox(@)), rinsed several times with tap water, rinsed with distilled water, drained of excess water, and air-dried or wiped dry. A necessary piece of equipment for cleaning the tube of the Coliwasa is a bottle brush that fits tightly inside the diameter of the tube. The brush is connected to a rod of sufficient length to reach the entire length of the sampler tube. Using this ramrod and fiber reinforced paper towels, the Coliwasa tube may be quickly cleaned. Improper cleaning of sample equipment will cause cross contamination of samples. Prevention of contamination is of particular importance in these samples. Clean samplers should be stored in polyethylene plastic tubes or bags in a clean and protected area.

E.6.9.2.2. Sampling Procedures

- Assemble the Coliwasa sampler.

- Make sure that the Coliwasa sampler is clean.

- Check to make sure the sampler is functioning properly. Adjust the locking mechanism, if necessary, to make sure the neoprene rubber stopper provides a tight closure.

- Wear necessary protective clothing and gear and observe required sampling precautions.

- Put the sampler in the open position by placing the stopper rod handle in the T-position and pushing the rod down until the handle sits against the sampler's locking block.

- Slowly lower the Coliwasa sampler into the liquid at a rate that permits the levels of the Liquid inside and outside the sampler tube to be about the same. If the level of the liquid in the sampler tube is lower than that outside the sampler, the sampling rate is too fast and will result in a nonrepresentative sample.

- When the sampler stopper hits the bottom of the liquid container, push the sampler tube downward against the stopper to close the sampler. Lock the sampler in the closed position by turning the T-handle until it is upright and one end rests tightly on the locking block.

- Slowly withdraw the sampler from the container with one hand while wiping the sampler tube with a disposable cloth with the other hand.

- Carefully discharge the sample into a glass container by slowly opening the sampler. This is done by slowly pulling the lower end of the T-handle away from the locking block while the lower end of the sampler is positioned in the glass container.

- Cap the glass container, attach a label and seal, record in the field log book, and complete the sample analysis request sheet and chain-of-custody record.

- Unscrew the T-handle of the sampler and disengage the locking block. Clean the sampler on site or store the contaminated parts of the sampler in a plastic storage tube or bag for subsequent cleaning. Store used rags in plastic bags for subsequent disposal.

E.6.9.3. Sample Handling and Documentation

Soil and liquid samples will be analyzed either at LANL or at a commercial laboratory. In either case, each sample will be labeled, sealed, and accompanied by a chain-of-custody and a sample analysis request form.

The sample container must be sealed with a gummed paper seal attached to the container in such a way that the seal must be broken in order to open the container. The seal and sample tag must be completed with a waterproof pen. An example of a sample seal is shown in Figure E.6.3.

The sample label is necessary to prevent misidentification of samples and shall include, if applicable, the grid number referenced to positions staked on the site perimeter. The "field information" in the case of soil sampling, shall include observations such as the soil texture and surface appearance, ambient temperature and cloud cover at time of sampling, and precipitation conditions 24 hours before sampling. An example of a sample label is shown in Figure E.6.4.

The chain-of-custody form is necessary to trace sample possession from the time of collection and must accompany every sample. This record becomes especially important when the sample is to be introduced as evidence in litigation. This is a two page record with the original accompanying shipment and the "copy" retained by the Laboratory. An example of this form is shown in Figure E.6.5.

A separate closure sampling field log book will be kept and will contain all information pertinent to field surveys and sampling. The log book shall have bound

and consecutively numbered pages in 8-l/1 by 11-inch format. Minimum entries include:

a. Purpose of sample (routine sampling, special sampling),

b. Location of sampling (coordinates referenced to staked field points, if soil sample),

c. Name and business address of person making log entry,

d. Type of process producing waste,

e. Number and volume of sample,

f. Description of each sampling location, sampling methodology, equipment used, etc.,

g. Date and time of sample collection,

h. Sample destination and transporter's name (name of laboratory, UPS, etc.),

i. Map or photograph of the sampling site, if any,

j. Field observations (ambient temperature, sky conditions, past 24-hour precipitation, etc.),

k. Field measurements, if any (pH, flammability, conductivity, explosivity, etc.),

l. Collector's sample identification number(s), and

m. Signature of person responsible for the log entry.

Sampling situations vary widely. No general rule can be given as to the extent of information that must be entered in the log book. A good rule, however, is to record sufficient information so that someone can reconstruct the sampling situation without relying on the collector's memory.

The sample shipment and chain-of-custody record is accompanied by a sample analysis request sheet (Figure E.8.8). The request sheet has two parts: field and laboratory. The field portion of this form must be completely by the person collecting the sample and include most of the pertinent information noted in the log book. The laboratory portion is intended to be completed by the laboratory personnel when the sample is received.

E.6.10. Quality Assurance/Quality Control

The Permittee shall designate a qualified individual or individuals to independently oversee the closure activities and report directly to senior management on the quality of the performance of this closure. This individual will personally observe a portion of the key activities, assure that sample blanks are used and analyzed and review the analysis reports for accuracy and adequacy. A written QA/QC plan prepared in accordance with SW-846 guidance shall be prepared and followed, with variations from the plan documented and explained. The designated individual shall prepare a written statement for the final report commenting on the adequacy of the analysis showing decontamination.

E.6.11. Final Closure Report

Upon completion of the closure activities, the Permittee shall submit a Final Closure Report to the Director. The report shall document the final closure and contain, at a minimum, the following:

A. The certification described in paragraph E.6.8.

B. Any variance from the approved activities and the reason for the variance.

C. A tabular summary of all sampling results, showing:

1. Sample identification
2. Sampling location
3. The datum reported,
4. Detection limit for each datum,
5. A measure of analytical precision (e.g. uncertainty, range, variance),
6. Identification of analytical procedure, and
7. Identification of analytical laboratory.

D. A QA/QC statement on the adequacy of the analyses and the decontamination demonstration.

E. The location of the file of supporting documentation:

1. Field log books,
2. Laboratory sample analysis reports,
3. The QA/QC documentation, and
4. Chain of custody records.

F. Disposal location of all regulated and non-regulated residues.

G. A certification of accuracy of the report.

TABLE E.6.1.

CLOSURE SCHEDULE

ACTIVITY	MAXIMUM TIME REQUIRED
Notify EID of the closure	-90 days
Let contract request for proposals	-90 days
Receive proposals	-30 days
Select and award contract	-10 days
Begin closure activities	Day 0
Disposal of final wastes	Day 60
Internal/external washdown	Day 70
Equipment disassembly	Day 95
Individual component decontamination	Day 105
Residue removal from concrete pad/floor	Day 125
Floor decontamination	Day 140
Final building clean up and removal	Day 160
Initial soil sampling and analysis	Day 190
Expanded sampling and analysis (contingency)	Day 210
Contaminated soil removal	Day 250
Resample and analysis	Day 285
Decontamination verification	Day 310
Final closure report submitted to EID	Day 340

NOTE: The calendar days given above are completion dates for each activity. In some cases more than one activity may occur simultaneously.

TABLE E.6.2.

ANALYTICAL PARAMETERS

METALS	ORGANICS
Arsenic	Halogenated volatile organics
Barium	Nonhalogenated volatile organics
Cadmium	Acid-extractable semivolatile organics
Chromium	Base-neutral extractable semivolatile organics
Lead	Organochlorine pesticides
Mercury	Chloronated herbicides
Selenium	Phenols
Silver	
Nickel	
Berylium	

OTHER

Cyanides
pH

NOTES:

Analytical methods are taken from *Test Methods for Evaluating Solid Waste*, EPA SW-846, and may be superseded by more current or alternate methods from SW-846 or alternate EPA-approved methods.

Metals may be analyzed for total content. Any metal whose total concentration exceeds the standard for Extraction Procedure Toxicity shall be analyzed by Extraction Procedure Toxicity procedures. Both data shall be reported in the final report.

TABLE E.6.3.

SAMPLING SUMMARY

MATERIAL SAMPLED	METALS	ORGANICS	OTHER
Washdown solutions before use	X	X	X
Washdown solutions after use	X	X	X
Soils background	X	X	X
Soil samples	X	X	X
Final decontamination samples	*	*	*

NOTES:

Analytical parameters are given in Table E.6.2.

* Parameters given in HWMR-5, Part V, Section 264, Appendix IX

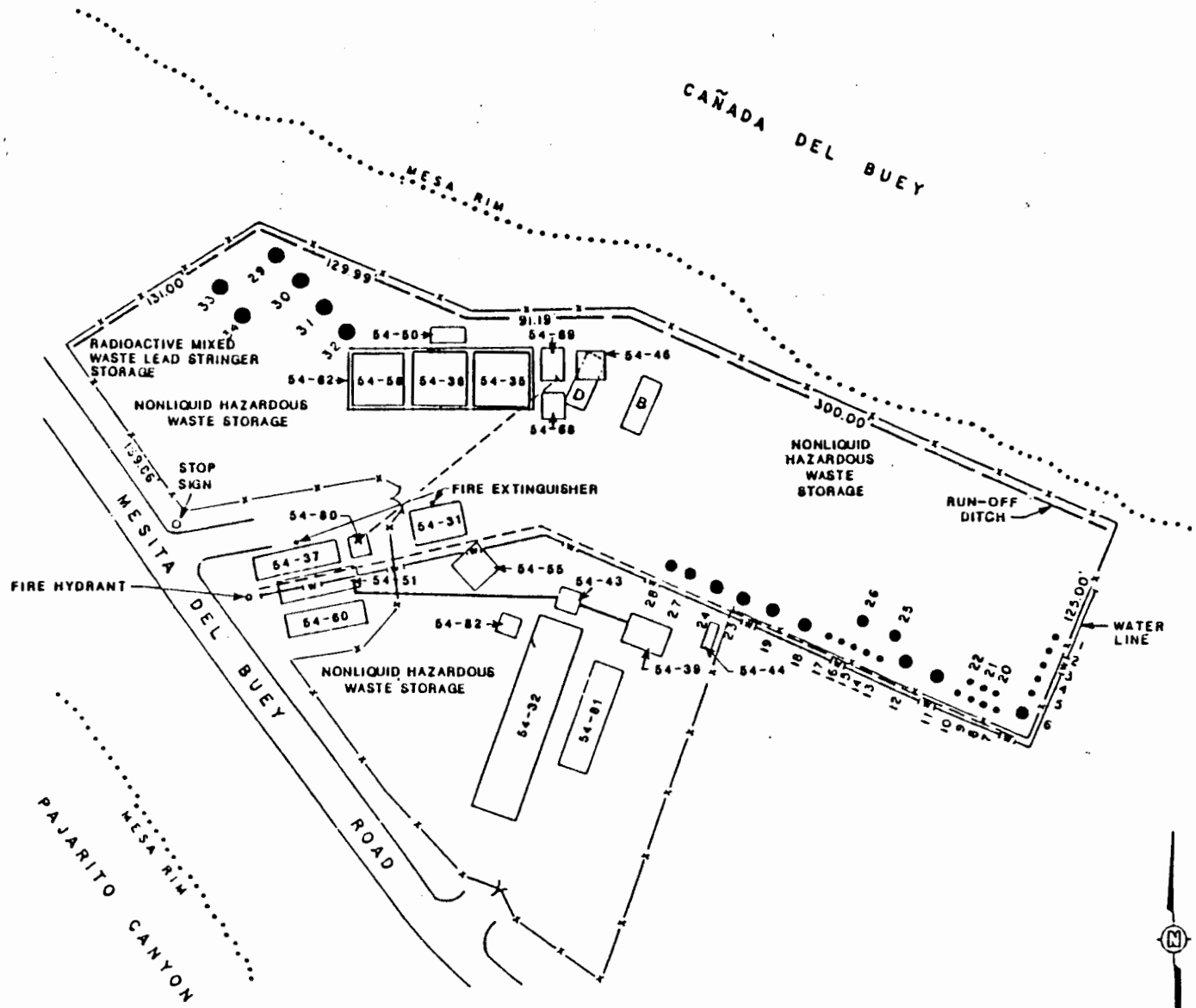

LEGEND

MATERIAL DISPOSAL UNITS:

54-31 PACKAGING BUILDING
54-32 ROOFED WASTE STORAGE PAD
54-35 TREATMENT PAD
54-36 SAMPLING PAD
54-37 OFFICE TRAILER
54-39 PCB BUILDING
54-43 SEPTIC HOLDING TANK
54-44 PROPANE TANK
54-46 EQUIPMENT STORAGE BUILDING
54-50 EQUIPMENT STORAGE BUILDING
54-51 OFFICE TRAILER
54-55 SAMPLE PREP LAB BUILDING
54-58 TRANSPORT PAD
54-60 OFFICE TRAILER
54-62 CANOPY OVER MD-35,MD-36,MD-58
54-68 MODULAR STORAGE BUILDING
54-69 MODULAR STORAGE BUILDING
54-80 SEPTIC HOLDING TANK
54-81 PCB OIL TANK STORAGE
54-82 DRUM CRUSHER
B SURFACE IMPOUNDMENT
D SURFACE IMPOUNDMENT

● LOCATION OF AREA L INACTIVE SHAFTS

FIGURE E.6.1.

TA-54 AREA L
WASTE MANAGEMENT UNITS

PREPARED FOR

LOS ALAMOS
NATIONAL LABORATORY
LOS ALAMOS, NEW MEXICO

IT ...Creating a Safer Tomorrow

DRAWING NUMBER 5612160 1 B1
DRAWN BY
CHECKED BY
APPROVED BY
10/20/88

© 1984 IT CORPORATION
ALL COPYRIGHTS RESERVED
Do Not Scale This Drawing

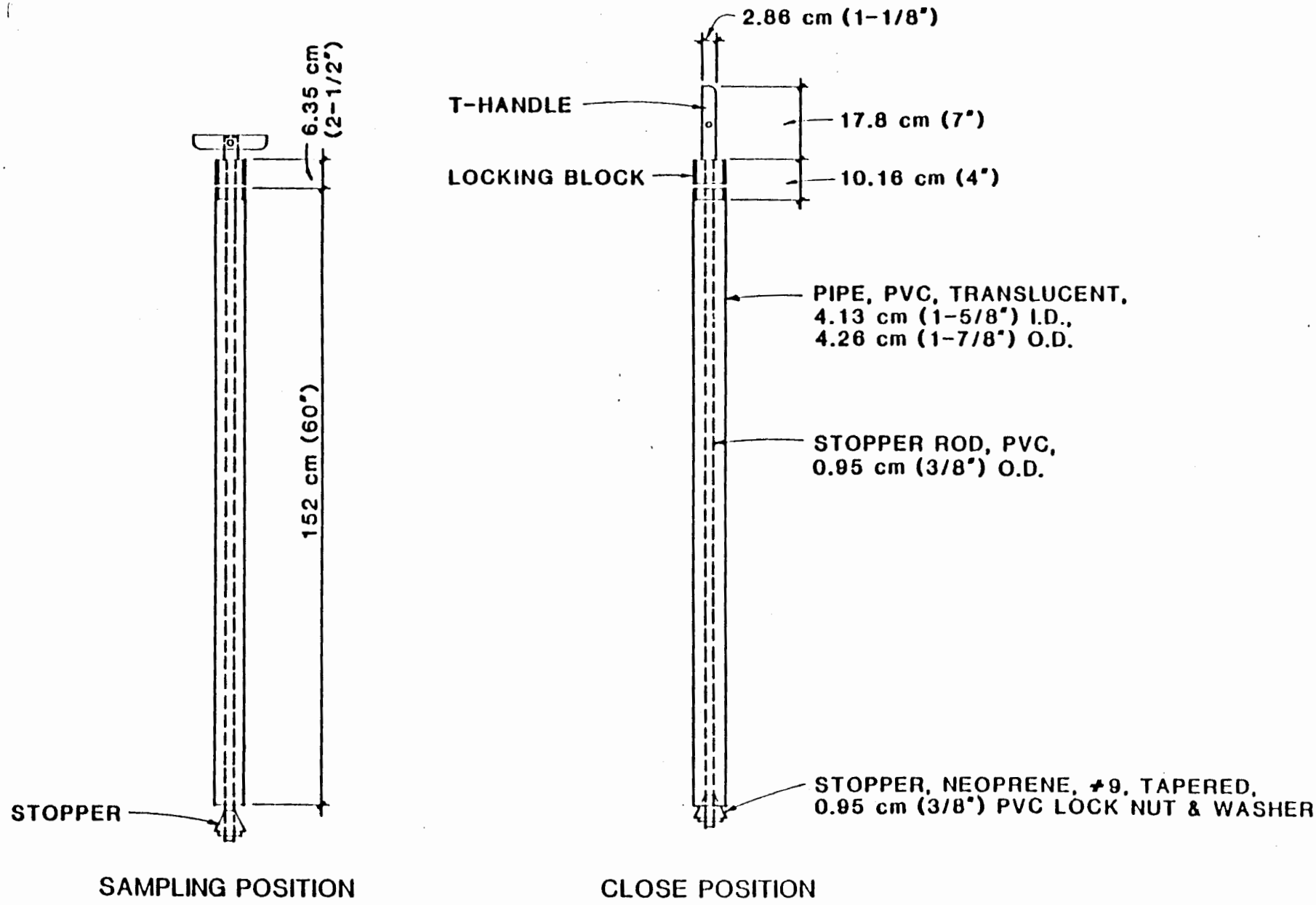

FIGURE E-6.2 COMPOSITE LIQUID WASTE SAMPLER (COLIWASA)

FIGURE E-6.3
EXAMPLE OF SAMPLE SEAL

OFFICIAL SAMPLE SEAL

Collected by _____ Collector's Sample No._____
(Signature)

Date Collected_____ Time Collected_____

Place Collected_____

_____

_____

FIGURE E-6.4
EXAMPLE OF SAMPLE LABEL

OFFICIAL SAMPLE LABEL

Collector_____ Collector's Sample No._____

Place. of Collection_____

_____

Date Sampled_____ Time Sampled_____

Field Information_____

_____

_____

FIGURE E-6.5
CHAIN OF CUSTODY RECORD

Hazardous Materials
Collector's Sample No.___

Location of Sampling: __Producer __Hauler
__Disposal Site
__Other:_____

_____

Company's Name _____Telephone (___)_____

Address_____
number street city state zip

Collector's Name_____Telephone (___)_____
signature

Date Sampled_____Time Sampled_____hours

Type of Process Producing Waste_____

Waste Type Code_____Other_____

Field Information_____

_____

_____

Sample Allocation:

1. _____
name of organization

2. _____
name of organization

3. _____
name of organization

Chain of Possession:

1. _____ _____ _____
signature title inclusive dates

2. _____ _____ _____
signature title inclusive dates

3. _____ _____ _____
signature title inclusive dates

CLOSURE PLAN
PERMIT ATTACHMENT E.7
NM 0890010515-1

E.7. Storage Concrete Containment Units

E.7.1. Description

There are two units used to store hazardous chemical waste labpacks in 55 gallon drums and other storage containers meeting DOT specifications, at TA-50 and one at TA-54, Area L. Each unit consists of a roofed concrete concrete containment structure encompassing 1,596 square feet. The wastes are segregated into compatible waste types upon arrival at the unit and placed within one of the six storage cells. Wastes are stored in 55 gallon drums, 220 gallon polyethylene containers or 330 gallon polyethlyene containers. All containers meet DOT specifications. Two units are located south of Building TA-50-37 (Figure E.7.1) and the other is at TA-54, Area L (Figure E.7.2).

E.7.2. Estimate of Maximum Waste in Storage

The maximum amount of waste in storage at any one unit is 65 cubic meters (17, 220 gallons).

E.7.3. Description of Waste Handled

A wide variety of wastes generated throughout the Laboratory are stored at the units, including wastes from basic and applied chemistry R & D programs (small quantities of different acids, bases, organics, inorganics, and reactive metals), processing waste (sludge resutling from treatment at TA-50-1 Batch Treatment Plant), and chemically contaminated equipment packed for off site disposal at a permitted facility. Any characteristic or listed waste used at the laboratory may be stored at any unit. The units at TA-50 normally store only characteristic waste code D002 and listed wastes F001 through F009, but may store any regulated waste generated by the Laboratory.

E.7.4. Closure

E.7.4.1. Partial Closure

Partial closure would consist of closure of one unit while leaving the other units in service. In such an event, the following procedures would apply to the unit to be closed.

E.7.4.2. Closure Procedure

Personnel involved in decontaminating the unit will wear protective equipment, including, acid/solvent-resistant coveralls, head protection, neoprene-coated gloves, and boots, Wrists and ankles are to be taped to protect against upward and inward splash. As a minimum protection, face shields will be worn. Full face respirators or other protective equipment will be used if specified by the Laboratory's Industrial Hygiene Group, HSE-5, following a field inspection.

Before decontamination, all wastes in storage will either be treated or shipped off site for disposal at a permitted facility. Given the diversity of wastes handled, it is not possible to estimate the exact wastes on hand at the initiation of closure and, therefore, the final disposition of the wastes. In general, recycable wastes will be reused internally or recycled to users off site. Organic wastes will be burned at the permitted Incinerator at TA-50-37. Any wastes compatible with permitted treatment at the TA-50-1 Batch Waste Treatment Unit or the TA-54, Area L treatment tanks will be so treated. The remaining wastes will be transported off site to a permitted facility.

Following removal or treatment of the wastes on site at the start of closure, the storage unit will be decontaminated by washing with Liquinox(@) or Alconox(@) in water. Wash water is expected to be contained within the curbed area and collect in the sump. If spills occur outside the curbed area, the spilled materials will be absorbed on suitable material, collected and placed in containers. The area affected by the spill will be included in the final cleanup determination. The resulting wash solutions will be placed in approved DOT containers and tken to TA-54, Area L for sampling, analysis and shipped off site for treatment or disposal at a permitted facility. The protective clothing and tools used during the wash down will be cleaned with detergent and water. The wash waster will be collected and analyzed. If the wash water is not hazardous, the water will be discharged to the industrial waste water sewer. If the wash water contains hazardous constituents, it will be treated on site or transported off site to a permitted facility. Spill residues, sludges, mops and rags used for clean-up will be placed in containers for transport to Area L, with ultimate off site disposal at a permitted facility.

E.7.4.3. Soil Decontamination

Soil sampling will be conducted to determine if hazardous wastes have been tracked outside of contaminated areas, as described in section E.7.8. After the building is decontaminated, three soil samples will be collected along each short edge of the asphalt apron around the building and ten along each long side. Each will be made up of cores six inches deep taken six inches off the asphalt edge and equally spaced to cover each edge.

If contamination is found in any of these samples, the limits of the sampling area will be expanded by establishing a three foot sampling grid around a single contamination point, or centered on the area defined by the locus of multiple contamination points, to determine the outside perimeter of the contamination. Sampling will be continued until the extent of contamination is determined. Background samples will be taken from an uncontaminated area upgradient from and unaffected by the waste managemnt activity, in the same manner as the initial closure soil survey.

Once the limits of the contaminated area are determined, the contaminated soil will then be removed to a depth of 6 inches and handled as a regulated waste. The adequacy of decontamination is determined by additional sampling. Sampling, analysis, and documentation procedures are detailed in section E.6.9. In order to demonstrate final decontamination, soil samples will be analyzed for all HWMR-5, Part V, Section 264, Appendix IX constituents. Analysis and quality assurance/quality control will follow methods defined in SW-846.

E.7.5 Decontamination Verification

Before the first wash down, two samples will be taken of the clean Liquinox(@) or Alconox(@) solution in water and analyzed for the constituents listed in Table E.7.2. The constituents listed in Table E.7.2 include regulated constituents normally stored at the unit.

One additional clean solution sample will be taken for each additional washdown event. These analytical results provide background data for decontamination verficiation.

Used washdown solutions will be analyzed for the constituents listed in Table E.7.2. Analytical procedures will conform to methods found in SW-846. The constituents listed in Table E.7.2. include regulated constituents normally stored in the units. A scan for volatile and semivolatile organics is performed to ensure that solvents commonly used within the Laboratory have not contaminated the unit.

Successful decontamination is defined as:

1. No detectable hazardous constituents in the final sample, or
2. Detectable hazardous constituents in the final sample are equal to or less than, at the 0.01 confidence level, their concentration in the unused washwater or background sample.

An alternative demonstration of decontamination may be proposed and justified at the time of closure as circumstances indicate. The Director will evaluate the proposed alternative in accordance with the standards and guidance then in effect and, if approved, incorporate by permit modification the alternative into the closure plan.

E.7.6. Closure Schedule

The year of closure for either unit is 2100. Closure will observe the schedule given in Table E.7.1. Closure is expected to take 270 days.

E.7.7. Closure Certification

An independent registered professional engineer and the Permittee shall witness the closure and ensure that the closure follows this plan. Upon completion of closure, the engineer and the DOE shall prepare a letter certifying that the facility has been closed in accordance with this plan. The letter shall be dated and signed by each party, stamped by the registered engineer, and the original copy submitted by the DOE to the Director of NMEID. One copy shall be maintained at the DOE office and one copy maintained by the HSE-8 Regulatory Compliance Section.

E.7.8. Sampling and Analytical Procedure

The following section defines procedures and methods for sampling, analysis and documentation applicable to closure plans. While the procedures and method are specific, any applicable procedure or method given in SW-846 may be used if conditions or experience shows the alternate method to be more appropriate. All analytical procedures actually used will be annotated in the final closure report. Disposable samplers may be used.

Samples will be taken, placed in bottles, sealed, tagged, and immediately packed in vermiculite, sawdust, or, if refrigeration is required, an insulated container with ice.

One sample for every ten samples will be either duplicated or split. The duplicated or split sample will be identified by a code so that its source is not available to the analytical laboratory, but analytical results can be compared to its twin.

Sample containers appropriate for the requested analyses will be used for all samples. Sampling will be conducted in accordance with procedures given in *Samplers and Sampling Procedures for Hazardous Waste Streams*, EPA 600/2-80-018 and/or SW-846.

E.7.8.1. Soil and Solid Residues Sampling

The sampling procedures outlined below are used to determine the amount of hazardous material deposited on a particular area of land, or to determine the leaching rate of the material, or determine the residue level on the soil. Adequate preparation ensures that proper sampling is accomplished.

Surface soil samples will be collected with a trowel or scoop. To sample below 3 in. (8 cm), samples will be collected with a Veihmeyer soil sampler. Drums of solid residues will be sampled with a core sampler or Veihmeyer soil sampler. Drums not capable of being sampled will be assumed to be hazardous waste.

E.7.8.1.1. Cleaning of Sampler

It is important to clean the samplers after each site is sampled. An unused disposable sampler may be presumed clean if still in a factory sealed wrapper. Unsealed samplers will be cleaned prior to use. The samplers will be washed with a warm Liquinox(@) or Alconox(@) solution, rinsed several times with tap water, rinsed with distilled water, drained of excess water, and air-dried or wiped dry. Prevention of cross contamination is of particular importance in these samples.

E.7.8.1.2. Sampling Procedures

Trowel or Scoop

- Take small, equal portions of sample from the surface or near the surface of the material to be sampled.
- Combine the samples in a glass container.
- Cap the container, attach a label and seal, record in field log book, and complete the sample analysis request sheet and chain-of-custody record.

Veihmeyer Sampler

- Assemble the sampler by screwing in the tip and drive head on the sampling tube.
- Insert the tapered handle (drive guide) of the drive hammer through the drive head.
- Place the sampler in a perpendicular position on the material to be sampled.
- With the left hand holding the tube, drive the sampler into the material to the desired sampling depth by pounding the drive head with the drive

hammer. Do not drive the tube further than the tip of the hammer's drive guide.

- Record the length of the tube that penetrated the material.
- Move the drive hammer onto the drive head. In this position, the hammer serves as a handle for the sampler.
- Rotate the sampler at least two revolutions to shear off the sample at the bottom.
- Lower the sampler handle (hammer) until it just clears the two ear-like protrusions on the drive head and rotate about 90 degrees.
- Withdraw the sampler from the material by pulling the handle (hammer) upwards. When the sampler cannot be withdrawn by hand, as in deep soil sampling, use a pullerjack and grip.
- Dislodge the hammer from the sampler, turn the sampler tube upside down, tap the head gently against the hammer, and carefully recover the sample from the tube. The sample should slip out easily.
- Store the core sample in a 1,000 or 2,000 ml (1 qt or l/2 gal) sample container.
- Label the sample, affix the seals, record in the field log book, complete the sample analysis request sheet and chain-of-custody record, and deliver the samples to the laboratory for analysis.

E.7.7.2. Liquid Sampling

A Coliwasa sampler or similar device will be used to sample water solutions in order to determine background parameters before washing the area; it will also be used to sample the dirty wash water used in cleaning equipment. The recommended model of the Coliwasa is shown in Figure E.7.3, the main parts consisting of the sampling tube, the closure-locking mechanism, and the closure system. As an alternative to the Coliwasa, glass tubes may be used to sample liquids. The primary advantage in using a glass tube is that the tube will be disposed of as hazardous waste after each sample is collected, thus eliminating the potential for cross contamination.

E.7.7.2.1. Cleaning of Sampler

The sampler must be clean before use. An unused disposable sampler may be presumed clean if still in a factory sealed wrapper. Unsealed samplers will be cleaned prior to use. The used sampler must be washed with a warm detergent solution (Liquinox(@) or Alconox(@)), rinsed several times with tap water, rinsed with distilled water, drained of excess water, and air-dried or wiped dry. A necessary piece of equipment for cleaning the tube of the Coliwasa is a bottle brush that fits tightly inside the diameter of the tube. The brush is connected to a rod of sufficient length to reach the entire length of the sampler tube. Using the ramrod and fiber reinforced paper towels, the Coliwasa tube may be quickly cleaned. Improper cleaning of sample equipment will cause cross contamination of samples. Prevention of contamination is of particular importance in these samples. Clean

samplers should be stored in polyethylene plastic tubes or bags in a clean an protected area.

E.7.8.2.2. Sampling Procedures

- Assemble the Coliwasa sampler.
- Make sure that the Coliwasa sampler is clean.
- Check to make sure the sampler is functioning properly. Adjust the locking mechanism, if necessary, to make sure the neoprene rubber stopper provides a tight closure.
- Wear necessary protective clothing and gear and observe required sampling precautions.
- Put the sampler in the open position by placing the stopper rod handle in the T-position and pushing the rod down until the handle sits against the sampler's locking block.
- Slowly lower the Coliwasa sampler into the liquid at a rate that permits the levels of the Liquid inside and outside the sampler tube to be about the same. If the level of the liquid in the sampler tube is lower than that outside the sampler, the sampling rate is too fast and will result in a nonrepresentive sample.
- When the sampler stopper hits the bottom of the liquid container, push the sampler tube downward against the stopper to close the sampler. Lock the sampler in the closed position by turning the T-handle until it is upright and one end rests tightly on the locking block.
- Slowly withdraw the sampler from the container with one hand while wiping the sampler tube with a disposable cloth with the other hand.
- Carefully discharge the sample into a glass container by slowly opening the sampler. This is done by slowly pulling the lower end of the T-handle away from the locking block while the lower end of the sampler is positioned in the glass container.
- Cap the glass container, attach a label and seal, record in the field log book, and complete the sample analysis request sheet and chain-of-custody record.
- Unscrew the T-handle of the sampler and disengage the locking block. Clean the sampler on site or store the contaminated parts of the sampler in a plastic storage tube or bag for subsequent cleaning. Store used rags in plastic bags for subsequent disposal.

E.7.8.3 Sample Handling and Documentation

Soil and liquid samples will be analyzed either at LANL or at a commercial laboratory. In either case, each sample will be labeled, sealed, and accompanied by a chain-of-custody and a sample analysis request form.

The sample container must be sealed with a gummed paper seal attached to the container in such a way that the seal must be broken in order to open the container. The seal and sample tag must be completed with a waterproof pen. An example of a sample seal is shown in Figure E.7.4.

The sample label is necessary to prevent misidentification of samples and shall include, if applicable, the grid number referenced to positions staked on the site perimeter. The "field information" in the case of soil sampling, shall include observations such as the soil texture and surface appearance, ambient temperature and cloud cover at time of sampling, and precipitation conditions 24 hours before sampling. An example of a sample label is shown in Figure E.7.5.

The chain-of-custody form is necessary to trace sample possession from the time of collection and must accompany every sample. This record becomes especially important when the sample is to be introduced as evidence in litigation. This is a two-page record with the original accompanying shipment and the "copy" retained by the Laboratory. An example of this form is shown in Figure E.7.6.

A separate closure sampling field log book will be kept and will contain all information pertinent to field surveys and sampling. The log book shall have bound and consecutively numbered pages in 8-l/1 by 11-inch format. Minimum entries include:

a. Purpose of sample (routine sampling, special sampling),

b. Location of sampling (coordinates referenced to staked field points, if soil sample),

c. Name and address of person making log entry,

d. Type of process producing waste,

e. Number and volume of sample,

f. Description of each sampling location, sampling methodology, equipment used, etc.,

g. Date and time of sample collection,

h. Sample destination and transporter's name (name of laboratory, UPS, etc),

i. Map or photograph of the sampling site, if any,

j. Field observations (ambient temperature, sky conditions, past 24-hour precipitation, etc),

k. Field measurements, if any (pH, flammability, conductivity, explosivity, etc),

l. Collector's sample identification number(s), and

m. Signature of person responsible for the log entry.

Sampling situations vary widely. No general rule can be given as to the extent of information that must be entered in the log book. A good rule, however, is to record sufficient information so that someone can reconstruct the sampling situation without relying on the collector's memory.

The sample shipment and chain-of-custody record is accompanied by a sample analysis request sheet. The request sheet has two parts: field and laboratory. The field portion of this form must be completely by the person collecting the sample and include most of the pertinent information noted in the log book. The laboratory portion is intended to be completed by the laboratory personnel when the sample is received.

E.7.9. Quality Assurance/Quality Control

The Permittee shall designate a qualified individual or individuals to independently oversee the closure activities and report directly to senior management on the quality of the performance of this closure. This individual will personally observe a portion of the key activities, assure that sample blanks are used and analyzed and review the analysis reports for accuracy and adequacy. A written QA/QC plan in accordance with SW-846 guidance shall be prepared and followed, with variations from the plan documented and explained. The designated individual shall prepare a written statement for the final report commenting on the adequacy of the analysis showing decontamination.

E.7.10. Final Closure Report

Upon completion of the closure activities, the Permittee shall submit a Final Closure Report to the Director. The report shall document the final closure and contain, at a minimum, the following:

A. The certification described in paragraph E.7.7.
B. Any variance from the approved activities and the reason for the variance.
C. A tabular summary of all sampling results, showing:
   1. Sample identification
   2. Sampling location
   3. The datum reported,
   4. Detection limit for each datum,
   5. A measure of analytical precision (e.g. uncertainty, range, variance),
   6. Identification of analytical procedure, and
   7. Identification of analytical laboratory.
D. A QA/QC statement on the adequacy of the analyses and the decontamination determination.
E. The location of the file of supporting documentation:
   1. Field log books,
   2. Laboratory sample analysis reports,
   3. The QA/QC documentation, and
   4. Chain of custody records.
F. Disposal location of all regulated and nonregulated residues.

G. A certification of accuracy of the report.

TABLE E.7.1.

CLOSURE SCHEDULE

ACTIVITY	MAXIMUM TIME REQUIRED
Notify the EID of closure	-90 Days
Advertise for proposals	-90 Days
Receive proposals	-30 Days
Select contractor and award contract	-10 Days
Begin closure activities	Day 0
Removal of wastes	Day 60
Wash down complete	Day 80
Sampling of washwater	Day 90
Soil sampling and analysis	Day 120
Soil removal	Day 160
Soil sampling and analysis	Day 190
Final clean up	Day 210
Decontamination verification	Day 240
Submit final report to EID	Day 270

NOTES:

The calendar days given above are completion dates for each activity. In some cases more than one activity may occur simultaneously.

This schedule applies equally to partial closure and final closure.

TABLE E.7.2.

ANALYTICAL PARAMETERS

TOTAL METALS	ORGANICS
Arsenic	Halogenated volatile organics
Barium	Nonhalogenated volatile organics
Cadmium	Acid-extractable semivolatile organics
Selenium	Base-neutral extractable semivolatile organics
Lead	Phenols
Mercury	Organochloride pesticides
Berylium	Chloronated herbicides
Chromium	
Silver	
Nickel	

OTHER

Cyanides
Ignitability
Reactivity
pH

NOTES:

Analytical methods are taken from *Test Methods for Evaluating Solid Waste*, EPA SW-846, and may be superseded by more current methods from SW-846 or alternate EPA-approved methods.

Metals may be analyzed for total content. Any metal whose total concentration exceeds the standard for Extraction Procedure Toxicity shall be analyzed by Extraction Procedure Toxicity procedures. Both data shall be reported in the final report.

TABLE E.7.3

SAMPLING SUMMARY

MATERIAL SAMPLED	METALS	ORGANICS	OTHER
Washdown solutions before use	X	X	X
Washdown solutions after use	X	X	X
Soils background	X	X	X
Soil samples	X	X	X
Final decontamination samples	*	*	*

NOTES:

Analytical parameters are given in Table E.7.2.

* Parameters given in HWMR-5, Part V, Section 264, Appendix IX

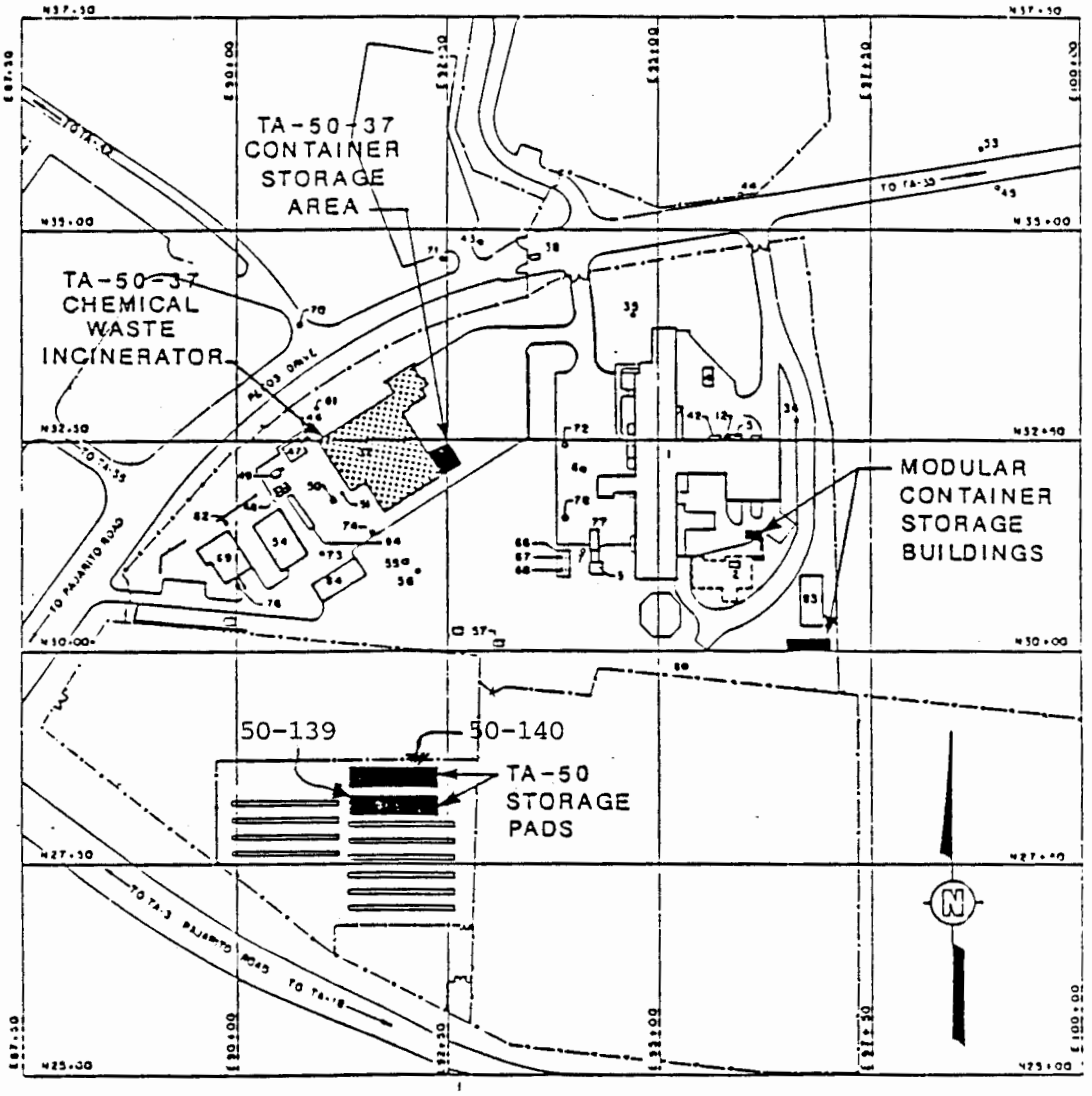

FIGURE E.7.1

LOCATIONS OF TA-50
CHEMICAL WASTE INCINERATOR
AND CONTAINER STORAGE
UNITS

PREPARED FOR

LOS ALAMOS
NATIONAL LABORATORY
LOS ALAMOS, NEW MEXICO

INTERNATIONAL
TECHNOLOGY
CORPORATION

© 1984 IT CORPORATION
ALL COPYRIGHTS RESERVED

KCT 10/11/88 | CHECKED BY | APPROVED BY | DRAWING NUMBER 3

DF

DIETZGEN

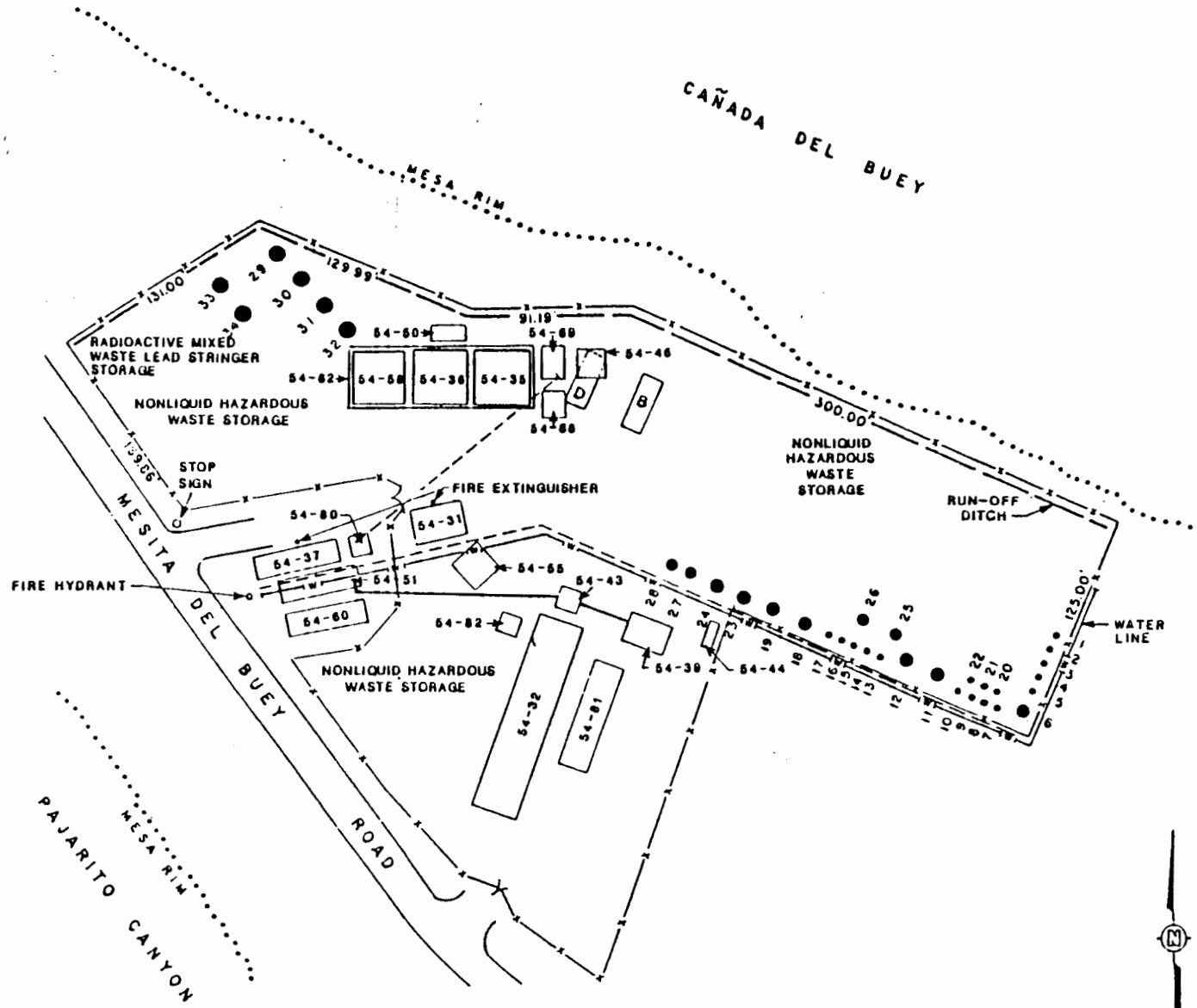

LEGEND

MATERIAL DISPOSAL UNITS:

- 54-31 PACKAGING BUILDING
- 54-32 ROOFED WASTE STORAGE PAD
- 54-35 TREATMENT PAD
- 54-36 SAMPLING PAD
- 54-37 OFFICE TRAILER
- 54-39 PCB BUILDING
- 54-43 SEPTIC HOLDING TANK
- 54-44 PROPANE TANK
- 54-46 EQUIPMENT STORAGE BUILDING
- 54-50 EQUIPMENT STORAGE BUILDING
- 54-51 OFFICE TRAILER
- 54-55 SAMPLE PREP LAB BUILDING
- 54-58 TRANSPORT PAD
- 54-60 OFFICE TRAILER
- 54-62 CANOPY OVER MD-35,MD-36,MD-58
- 54-68 MODULAR STORAGE BUILDING
- 54-69 MODULAR STORAGE BUILDING
- 54-80 SEPTIC HOLDING TANK
- 54-81 PCB OIL TANK STORAGE
- 54-82 DRUM CRUSHER
- B SURFACE IMPOUNDMENT
- D SURFACE IMPOUNDMENT
- ● LOCATION OF AREA L INACTIVE SHAFTS

FIGURE E.7.2.

TA-54 AREA L
WASTE MANAGEMENT UNITS

PREPARED FOR

LOS ALAMOS
NATIONAL LABORATORY
LOS ALAMOS, NEW MEXICO

IT ... Creating a Safer Tomorrow

© 1984 IT CORPORATION
ALL COPYRIGHTS RESERVED

Do Not Scale This Drawing

DRAWN BY K.A.T. 10/20/88 | CHECKED BY | APPROVED BY | DRAWING NUMBER 5012601 B1

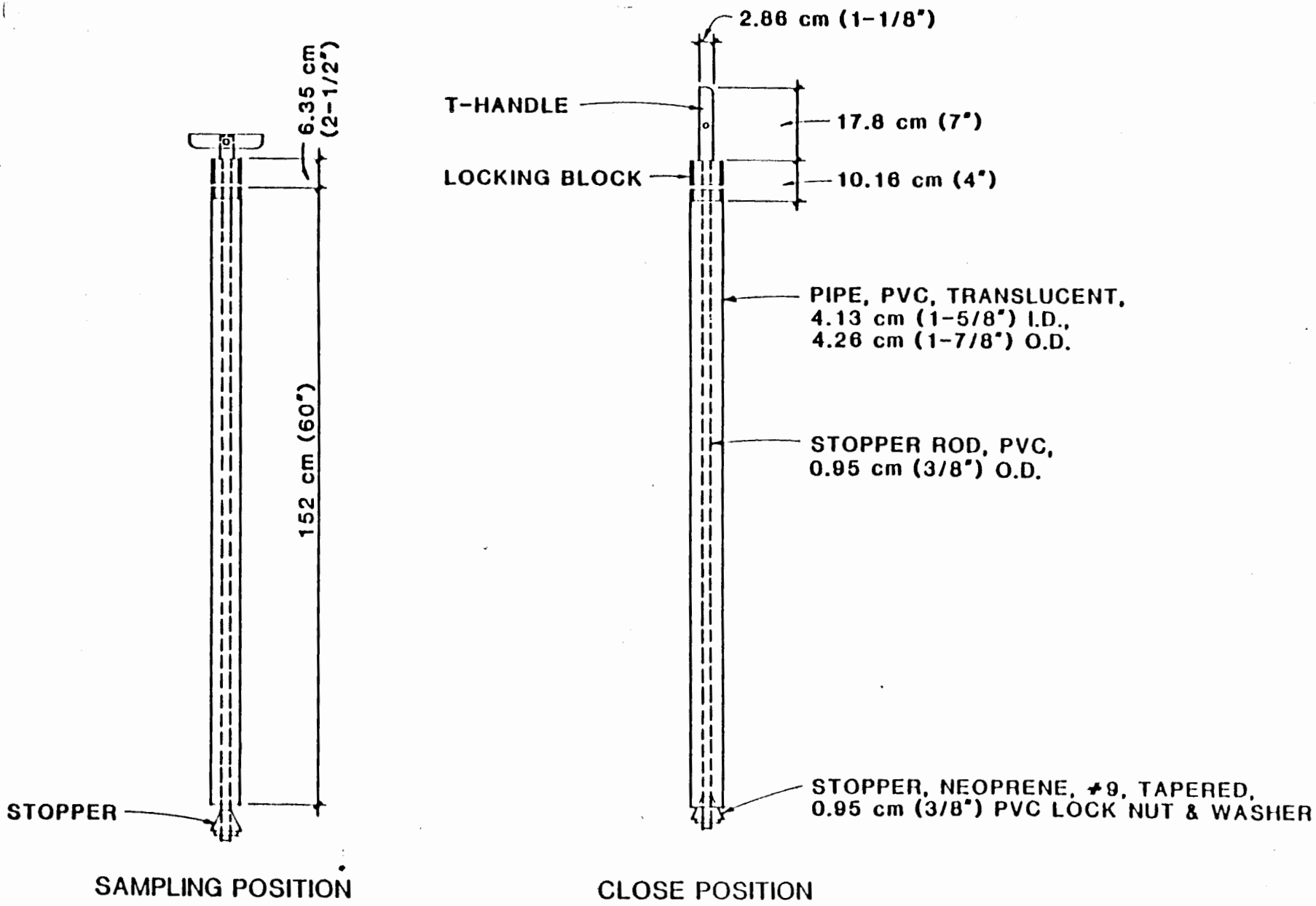

FIGURE E-7.3 COMPOSITE LIQUID WASTE SAMPLER (COLIWASA)

FIGURE E-7.4
EXAMPLE OF SAMPLE SEAL

OFFICIAL SAMPLE SEAL

Collected by _____ Collector's Sample No._____
(Signature)

Date Collected_____ Time Collected_____

Place Collected_____

_____

_____

FIGURE E-7.5
EXAMPLE OF SAMPLE LABEL

OFFICIAL SAMPLE LABEL

Collector_____ Collector's Sample No._____

Place. of Collection_____

_____

Date Sampled_____ Time Sampled_____

Field Information_____

_____

_____

FIGURE E-7.6
CHAIN OF CUSTODY RECORD

Hazardous Materials
Collector's Sample No.___

Location of Sampling: __Producer __Hauler
__Disposal Site
__Other:_____

_____

Company's Name _____Telephone (___)_____

Address_____
number street city state zip

Collector's Name_____Telephone (___)_____
signature

Date Sampled_____Time Sampled_____hours

Type of Process Producing Waste_____

Waste Type Code_____Other_____

Field Information_____

_____

_____

Sample Allocation:

1. _____
name of organization

2. _____
name of organization

3. _____
name of organization

Chain of Possession:

1. _____ _____ _____
signature title inclusive dates

2. _____ _____ _____
signature title inclusive dates

3. _____ _____ _____
signature title inclusive dates

CLOSURE PLAN
PERMIT ATTACHMENT E.8
NM 0890010515-1

E.8. Closure for TA-54 Area L Hazardous Waste Treatment/Storage Tanks

E.8.1. Unit description

Four 1,660-gallon, 10-gauge steel treatment/storage tanks are located at Area L. They are lined with plastic (except when treating reactive wastes) and used to neutralize, oxidize, and evaporate waste. The tanks are located on a bermed concrete pad. (Figure E.8.1) This closure plan addresses only these tanks.

The remainder of TA-54, Area L storage units consist of a single-story metal transfer/storage building, a roofed concrete storage pad, two transportable storage buildings and specified areas within the fenced portions of Area L for storage of solid containerized waste. These areas are used for the accumulation, packing, and storage of waste containers, which are generated throughout the laboratory and delivered to the facility routinely. Liquid wastes are segregated into compatible types and placed inside the transfer/storage building or within one of the storage cells of the roofed concrete pad. Wastes in small containers are put into one of the transportable storage buildings or the transfer/storage building for placing into lab packs. Wastes suitable for recycling are consolidated into drums, and any damaged or leaking drums are repacked into larger drums in this area. Solid containerized wastes are stored on pallets, or otherwise elevated four inches, in cleared areas within the fenced portions of Area L.

E.8.2. Estimate of Maximum Waste in Storage and Treatment

The maximum amount of waste that could be stored in the tanks is 6,640 gallons if the tanks were filled with no freeboard. The expected maximum volume of waste is 5,720 gallons.

E.8.3. Description of Waste Handled

The wastes treated or stored normally at the tanks are ammonium bifluoride and lithium hydride. Occasionally plating bath treatment residues from treating F003, F004, F005 and F006 wastes are also treated here. Potentially, any wastes or clean up wastes amenable to evaporation may be treated in the tanks. Therefore, any waste generated at the laboratory potentially has, or could be, treated or stored in the tanks.

E.8.4. Partial Closure

Should a single tank be closed, all portions of this plan addressing tank decontamination shall apply to the closing tank.

E.8.5. Closure Procedure

Cleanup and closure will be done in sequential order, culminating in the disposal of any residues or contaminated material by shipment off site to a permitted facility. Before decontamination, all wastes in storage will either be treated on site or

disposed of off site. Given the diversity of wastes handled, it is not possible to estimate the exact wastes on hand at the initiation of closure and, therefore, the final dispostion of the wastes. In general, recyclable wastes will be reused internally or recycled to users off site. Permitted wastes will be burned at the permitted incinerator at TA-50-37. Any wastes comptaible with permitted treatment at the TA-50-1 Batch Waste Treatment Unit will be so treated. The remaining wastes will be transported off site to a permitted disposal facility. If on site treatment is not possible due to prior closure of the permitted units, off site disposal will occur.

E.8.5.1. Waste Removal

The waste of concern at the start of closure consist of liquids and residues in the treatment tanks. Following removal of the tank liners and residual wastes, the tanks will be decontaminated. The wash water will be removed, placed in drums, sampled, analyzed and transported off site to a permitted facility for treatment or disposal. All wastes shipped off site will be manifested in accordance with the facility permit. All waste transporters will have an EPA identification number in accordance with HWMR-5, Part IV, Section 263.11.

E.8.5.2. Storage/Treatment Decontamination

Following removal of the tank liners and residual wastes, the tanks will be decontaminated by scraping and washing with Liquinox (@) or Alconox (@) in water. The wash water will be removed, placed in drums, sampled, analyzed and transported off site to a permitted facility for treatment or disposal. The tank will be then be scraped and brushed to remove residue and the residue will be collected and placed in drums. The tanks will be removed and the concrete pad on which the treatment tanks are placed will be washed with a Liquinox (@) or Alconox (@) solution in water. The wash water will be contained with the curbed concrete pad, collected, sampled, and analyzed. If the wash water is not hazardous or requires only neutralization, it will be removed with a vacuum truck and transported to an industrial sewer which drains to the facility industrial wastewater treatment plant at TA-50-1. If the water contains hazardous constituents, it will be removed, placed in drums and transported off site to a permitted facility for treatment or disposal. Wash-down of the tanks and pad will be repeated until decontamination is demonstrated.

E.8.5.3. Soil Decontamination

Soil sampling, as described in section E.8.9, will be conducted to determine if hazardous wastes have been tracked outside of contaminated areas. Eight soil samples will be collected around the edge of the bermed concrete pad beneath the treatment tanks as shown in Figure E.8.2. Each sample will be made up of six inch deep cores taken six inches off the edge and equally spaced to cover each edge. Soil and sediment samples will be analyzed for Table E.8.2 parameters. Analysis and quality assurance/quality control will follow methods defined in SW-846.

If the sample survey indicates that there are no contaminated soil areas, no further soil decontamination action will be taken at the site. If contamination is found in any of these samples, the limits of the sampling area will be expanded by establishing a three foot sampling grid around a single contamination point, or centered on the area defined by the locus of multiple contamination points, to determine the outside perimeter of the contamination. Sampling will be continued

until the extent of contamination is determined. Background samples will be taken in the same manner as the initial closure soil survey.

Once the limits of the contaminated area are determined, the contaminated soil will then be removed to a depth of 6 inches and handled as a regulated waste. Contaminated soil will be placed in drums or sealed in dump trucks for off site disposal at a permitted facility. The adequacy of decontamination is determined by additional sampling. Sampling, analysis, and documentation procedures are detailed in section E.8.9. In order to demonstrate final decontamination, soil samples will be analyzed for all Table E.8.2 parameters. Analysis and quality assurance/quality control will follow methods defined in SW-846.

E.8.5.4. Personnel Protection

Personnel who are washing equipment will wear rubber gloves, neoprene acid/solvent resistant coveralls, rubber boots, and a face shield. The Laboratory's Industrial Hygiene Group (HSE-5) will review the site survey analytical data and recommend additional protective clothing if necessary.

E.8.5.5. Equipment Decontamination

Shovels, drum trucks and other equipment used for decontamination will be scraped and brushed to remove residue, and the residue collected will be placed in drums for disposal off site at a permitted facility. The equipment will be placed on a 30 mil plastic sheet that is bermed to contain liquids and pressure washed with water and detergent. Large equipment such as backhoes and forklifts will also be washed. Testing will be performed on this water to determine if decontamination is adequate. Washing to considered adequate to decontaminate the equipment. The wash water will be allowed to evaporate and the plastic and residue will be packed in drums for off site disposal at a permitted facility.

E.8.6. Decontamination Verification

E.8.6.1. Wash water Decontamination Verification

A minimum of two samples of the clean Liquinox (@) or Alconox (@) solution will be sampled as background for wash water and, along with the wash water samples, analyzed for the constituents listed in Table E.8.2. Successful decontamination is defined as:

1. No detectable hazardous constituents in the final sample, or
2. Detectable hazardous constituents in the final sample are equal to or less than, at the 0.01 confidence level, their concentration in the unused washwater or background sample. Hazardous constituents detected in the background sample will invalidate that sample as true background unless adequate explanation of their source is provided.

An alternative demonstration of decontamination may be proposed and justified at the time of closure as circumstances indicate. The Director will evaluate the proposed alternative in accordance with the standards and guidance then in effect and, if approved, incorporate by permit modification the alternative into the closure plan.

E.8.6.2. Soil Decontamination

The Criteria for determining contaminated soil are the same as discussed in Section E.8.6.1. Regulated constituent concentrations will be compared to background concentrations. Soils containing levels of contamination above the background will be considered contaminated and removed as hazardous waste.

Decontamination of the site soil will be demonstrated by additional sampling. Because removal of contaminated soil will leave an exposed surface, the disturbed surface will be resampled in the same places used to define the contaminated area. Analysis and the determination of contamination is as previously discussed, and reanalysis will be conducted only for those constituents that caused the area to be determined contaminated.

E.8.7. Closure Schedule

The year of closure is 2100. Soil survey, contracting and closure activities will observe the schedule given in Table E.8.1. Some soil sampling and the decontamination contractor selection will be completed before closure begins. Because several of the closure steps will occur simultaneously, closure is estimated to take 360 days.

Contracts for analytical work and, if necessary, soil removal are expected to exceed $100,000. The Laboratory is required by policy to put the work out for bid, and ninety days are required to solicit and process the bids. The location of the site is prone to snow cover in the winter months. The closure may be delayed until the site is free of snow and the ground is thawed adequately to allow the soil sampling and other closure operations. The schedule includes a weather factor to allow for this delay.

E.8.8. Closure Certification

An independent, registered professional engineer and the Permittee shall witness the closure and ensure that the closure follows this plan. Upon completion of closure, the engineer and the DOE shall prepare a letter certifying that the facility has been closed in accordance with this plan. The letter shall be dated and signed by each party, stamped by the registered engineer, and the original copy submitted by the DOE to the Director of the NMEID. One copy shall be maintained at the DOE office and one copy maintained by the HSE-8 Regulatory Compliance Section.

E.8.9. Sampling and Analytical Procedure

The following section defines procedures and methods for sampling, analysis and documentation applicable to closure plans. While the procedures and method are specific, any applicable procedure or method given in SW-846 or other EPA-approved procedure may be used if conditions or experience shows the alternate method to be more appropriate. Disposable samplers may be used.

Sample containers appropriate for the requested analyses will be used for all samples. Sampling will be conducted in accordance with procedures given in *Samplers and Sampling Procedures for Hazardous Waste Streams*, EPA 600/2-80-018 and/or SW-846.

Samples will be taken, placed in bottles, sealed, tagged, and immediately packed in vermiculite, sawdust, or, if refrigeration is required, an insulated container with ice. One sample for every ten samples will be either duplicated or split. The duplicated

or split sample will be identified by a code so that its source is not available to the analytical laboratory, but analytical results can be compared to its twin.

E.8.9.1. Soil and Solid Residues Sampling

The sampling procedures outlined below are used to determine the amount of hazardous material deposited on a particular area of land, or to determine the leaching rate of the material, or determine the residue level on the soil. Adequate preparation ensures that proper sampling is accomplished.

Surface soil samples will be collected with a trowel or scoop. To sample below 3 in. (8 cm), samples will be collected with a Veihmeyer soil sampler. Drums of solid residues will be sampled with a core sampler or Veihmeyer soil sampler. Drums not capable of being sampled will be assumed to be reactive hazardous waste.

E.8.9.1.1. Cleaning of Sampler

It is important to clean the samplers after each site is sampled. An unused disposable sampler may be presumed clean if still in a factory sealed wrapper. Unsealed samplers will be cleaned prior to use. The samplers will be washed with a warm Liquinox (@) or Alconox (@) solution, rinsed several times with tap water, rinsed with distilled water, drained of excess water, and air-dried or wiped dry. Prevention of cross contamination is of particular importance in these samples.

E.8.9.1.2. Sampling Procedures

Trowel or Scoop

- Take small, equal portions of sample from the surface or near the surface of the material to be sampled.
- Combine the samples in a glass container.
- Cap the container, attach a label and seal, record in field log book, and complete the sample analysis request sheet and chain-of-custody record.

Veihmeyer Sampler

- Assemble the sampler by screwing in the tip and drive head on the sampling tube.
- Insert the tapered handle (drive guide) of the drive hammer through the drive head.
- Place the sampler in a perpendicular position on the material to be sampled.
- With the left hand holding the tube, drive the sampler into the material to the desired sampling depth by pounding the drive head with the drive hammer. Do not drive the tube further than the tip of the hammer's drive guide.
- Record the length of the tube that penetrated the material.
- Move the drive hammer onto the drive head. In this position, the hammer serves as a handle for the sampler.

- Rotate the sampler at least two revolutions to shear off the sample at the bottom.

- Lower the sampler handle (hammer) until it just clears the two ear-like protrusions on the drive head and rotate about 90 degrees.

- Withdraw the sampler from the material by pulling the handle (hammer) upwards. When the sampler cannot be withdrawn by hand, as in deep soil sampling, use a pullerjack and grip.

- Dislodge the hammer from the sampler, turn the sampler tube upside down, tap the head gently against the hammer, and carefully recover the sample from the tube. The sample should slip out easily.

- Store the core sample in a 1,000 or 2,000 ml (1 qt or l/2 gal) sample container.

- Label the sample, affix the seals, record in the field log book, complete the sample analysis request sheet and chain-of-custody record, and deliver the samples to the laboratory for analysis.

E.8.9.2. Liquid Sampling

A Coliwasa sampler or similar device will be used to sample water solutions in order to determine background parameters before washing the area; it will also be used to sample the dirty wash water used in cleaning equipment. The recommended model of the Coliwasa is shown in Figure E.8.3., the main parts consisting of the sampling tube, the closure-locking mechanism, and the closure system. As an alternative to the Coliwasa, glass tubes may be used to sample liquids. The primary advantage in using a glass tube is that the tube will be disposed of as hazardous waste after each sample is collected, thus eliminating the potential for cross contamination.

E.8.9.2.1. Cleaning of Sampler

The sampler must be clean before use. An unused disposable sampler may be presumed clean if still in a factory sealed wrapper. Unsealed samplers will be cleaned prior to use. The used sampler must be washed with a warm detergent solution (Liquinox (@) or Alconox (@)), rinsed several times with tap water, rinsed with distilled water, drained of excess water, and air-dried or wiped dry. A necessary piece of equipment for cleaning the tube of the Coliwasa is a bottle brush that fits tightly inside the diameter of the tube. The brush is connected to a rod of sufficient length to reach the entire length of the sampler tube. Using this ramrod and fiber reinforced paper towels, the Coliwasa tube may be quickly cleaned. Improper cleaning of sample equipment will cause cross contamination of samples. Prevention of contamination is of particular importance in these samples. Clean samplers should be stored in polyethylene plastic tubes or bags in a clean and protected area.

E.8.9.2.2. Sampling Procedures

- Assemble the Coliwasa sampler.

- Make sure that the Coliwasa sampler is clean.

- Check to make sure the sampler is functioning properly. Adjust the locking mechanism, if necessary, to make sure the neoprene rubber stopper provides a tight closure.

- Wear necessary protective clothing and gear and observe required sampling precautions.

- Put the sampler in the open position by placing the stopper rod handle in the T-position and pushing the rod down until the handle sits against the sampler's locking block.

- Slowly lower the Coliwasa sampler into the liquid at a rate that permits the levels of the Liquid inside and outside the sampler tube to be about the same. If the level of the liquid in the sampler tube is lower than that outside the sampler, the sampling rate is too fast and will result in a nonrepresentative sample.

- When the sampler stopper hits the bottom of the liquid container, push the sampler tube downward against the stopper to close the sampler. Lock the sampler in the closed position by turning the T-handle until it is upright and one end rests tightly on the locking block.

- Slowly withdraw the sampler from the container with one hand while wiping the sampler tube with a disposable cloth with the other hand.

- Carefully discharge the sample into a glass container by slowly opening the sampler. This is done by slowly pulling the lower end of the T-handle away from the locking block while the lower end of the sampler is positioned in the glass container.

- Cap the glass container, attach a label and seal, record in the field log book, and complete the sample analysis request sheet and chain-of-custody record.

- Unscrew the T-handle of the sampler and disengage the locking block. Clean the sampler on site or store the contaminated parts of the sampler in a plastic storage tube or bag for subsequent cleaning. Store used rags in plastic bags for subsequent disposal.

E.8.9.3. Sample Handling and Documentation

Soil and liquid samples will be analyzed either at LANL or at a commercial laboratory. In either case, each sample will be labeled, sealed, and accompanied by a chain-of-custody and a sample analysis request form.

The sample container must be sealed with a gummed paper seal attached to the container in such a way that the seal must be broken in order to open the container. The seal and sample tag must be completed with a waterproof pen. An example of a sample seal is shown in Figure E.8.4.

The sample label is necessary to prevent misidentification of samples and shall include, if applicable, the grid number referenced to positions staked on the site perimeter. The "field information" in the case of soil sampling, shall include observations such as the soil texture and surface appearance, ambient temperature

and cloud cover at time of sampling, and precipitation conditions 24 hours before sampling. An example of a sample label is shown in Figure E.8.5.

The chain-of-custody form is necessary to trace sample possession from the time of collection and must accompany every sample. This record becomes especially important when the sample is to be introduced as evidence in litigation. This is a two page record with the original accompanying shipment and the "copy" retained by the Laboratory. An example of this form is shown in Figure E.8.6.

A separate closure sampling field log book will be kept and will contain all information pertinent to field surveys and sampling. The log book shall have bound and consecutively numbered pages in 8-l/1 by 11-inch format. Minimum entries include:

a. Purpose of sample (routine sampling, special sampling),

b. Location of sampling (coordinates referenced to staked field points, if soil sample),

c. Name and business address of person making log entry,

d. Type of process producing waste,

e. Number and volume of sample,

f. Description of each sampling location, sampling methodology, equipment used, etc.,

g. Date and time of sample collection,

h. Sample destination and transporter's name (name of laboratory, UPS, etc.),

i. Map or photograph of the sampling site, if any,

j. Field observations (ambient temperature, sky conditions, past 24-hour precipitation, etc.),

k. Field measurements, if any (pH, flammability, conductivity, explosivity, etc.),

l. Collector's sample identification number(s), and

m. Signature of person responsible for the log entry.

Sampling situations vary widely. No general rule can be given as to the extent of information that must be entered in the log book. A good rule, however, is to record sufficient information so that someone can reconstruct the sampling situation without relying on the collector's memory.

The sample shipment and chain-of-custody record is accompanied by a sample analysis request sheet. The request sheet has two parts: field and laboratory. The field portion of this form must be completely by the person collecting the sample and include most of the pertinent information noted in the log book. The

laboratory portion is intended to be completed by the laboratory personnel when the sample is received.

E.8.10. Quality Assurance/Quality Control

The Permittee shall designate a qualified individual or individuals to independently oversee the closure activities and report directly to senior management on the quality of the performance of this closure. This individual will personally observe a portion of the key activities, assure that sample blanks are used and analyzed and review the analysis reports for accuracy and adequacy. A written QA/QC plan prepared in accordance with SW-846 guidance shall be prepared and followed, with variations from the plan documented and explained. The designated individual shall prepare a written statement for the final report commenting on the adequacy of the analysis showing decontamination.

E.8.11. Final Closure Report

Upon completion of the closure activities, the Permittee shall submit a Final Closure Report to the Director. The report shall document the final closure and contain, at a minimum, the following:

A. The certification described in paragraph E.8.8.
B. Any variance from the approved activities and the reason for the variance.
C. A tabular summary of all sampling results, showing:
   1. Sample identification
   2. Sampling location
   3. The datum reported,
   4. Detection limit for each datum,
   5. A measure of analytical precision (e.g. uncertainty, range, variance),
   6. Identification of analytical procedure, and
   7. Identification of analytical laboratory.
D. A QA/QC statement on the adequacy of the analyses and the decontamination demonstration.
E. The location of the file of supporting documentation:
   1. Field log books,
   2. Laboratory sample analysis reports,
   3. The QA/QC documentation, and
   4. Chain of custody records.
F. Disposal location of all regulated and non-regulated residues.
G. A certification of accuracy of the report.

TABLE E.8.1

CLOSURE SCHEDULE

PRECLOSURE ACTIVITIES

Notify the EID of closure	-240 days
Contract for sampling and/or analytical services	-240days
Conduct first soil sampling survey	-210 days
Analyze first soil samples	-180 days
Conduct second soil survey if needed	-150 days
Analyze second soil set of soil samples	-120 days
Advertise contract request for proposals	-90 days
Award contract	-30 days

CLOSURE ACTIVITIES

Begin Closure	Day 0
Analyze first soil samples	day 60
Conduct second soil samples survey, if needed	day 90
Treat or remove final wastes	day 90
Analyze second soil samples, if needed	day 120
Evaporate waste water from treatment tanks	day 180
Contract for soil decontamination	day 210
Dispose of tanks and residue	day 240
Remove soil	day 270
Weather delay contingency	day 300
Conduct verification samples	day 320
Analyze samples	day 350
Submit final report to EID	day 360

NOTES:

Many of the above steps may be taken concurrently, and the total closure period will not exceed 360 calendar days.

This schedule applies to both partial and final closure.

TABLE E.8.2.

ANALYTICAL PARAMETERS

METALS	ORGANICS
Arsenic	Halogenated volatile organics
Barium	Nonhalogenated volatile organics
Cadmium	Acid-extractable semivolatile organics
Chromium	Base-neutral extractable semivolatile organics
Lead	Organochlorine pesticides
Mercury	Chloronated herbicides
Selenium	Phenols
Silver	
Nickel	
Berylium	

OTHER

Cyanides
pH

NOTES:

Analytical methods are taken from *Test Methods for Evaluating Solid Waste*, EPA SW-846, and may be superseded by more current or alternate methods from SW-846 or alternate EPA-approved methods.

Metals may be analyzed for total content. Any metal whose total concentration exceeds the standard for Extraction Procedure Toxicity shall be analyzed by Extraction Procedure Toxicity procedures. Both data shall be reported in the final report.

TABLE E.8.3.

SAMPLING SUMMARY

MATERIAL SAMPLED	METALS	ORGANICS	OTHER
Washdown solutions before use	X	X	X
Washdown solutions after use	X	X	X
Soils background	X	X	X
Soil samples	X	X	X
Final decontamination samples	X	X	X

NOTES:

Analytical parameters are given in Table E.8.2.

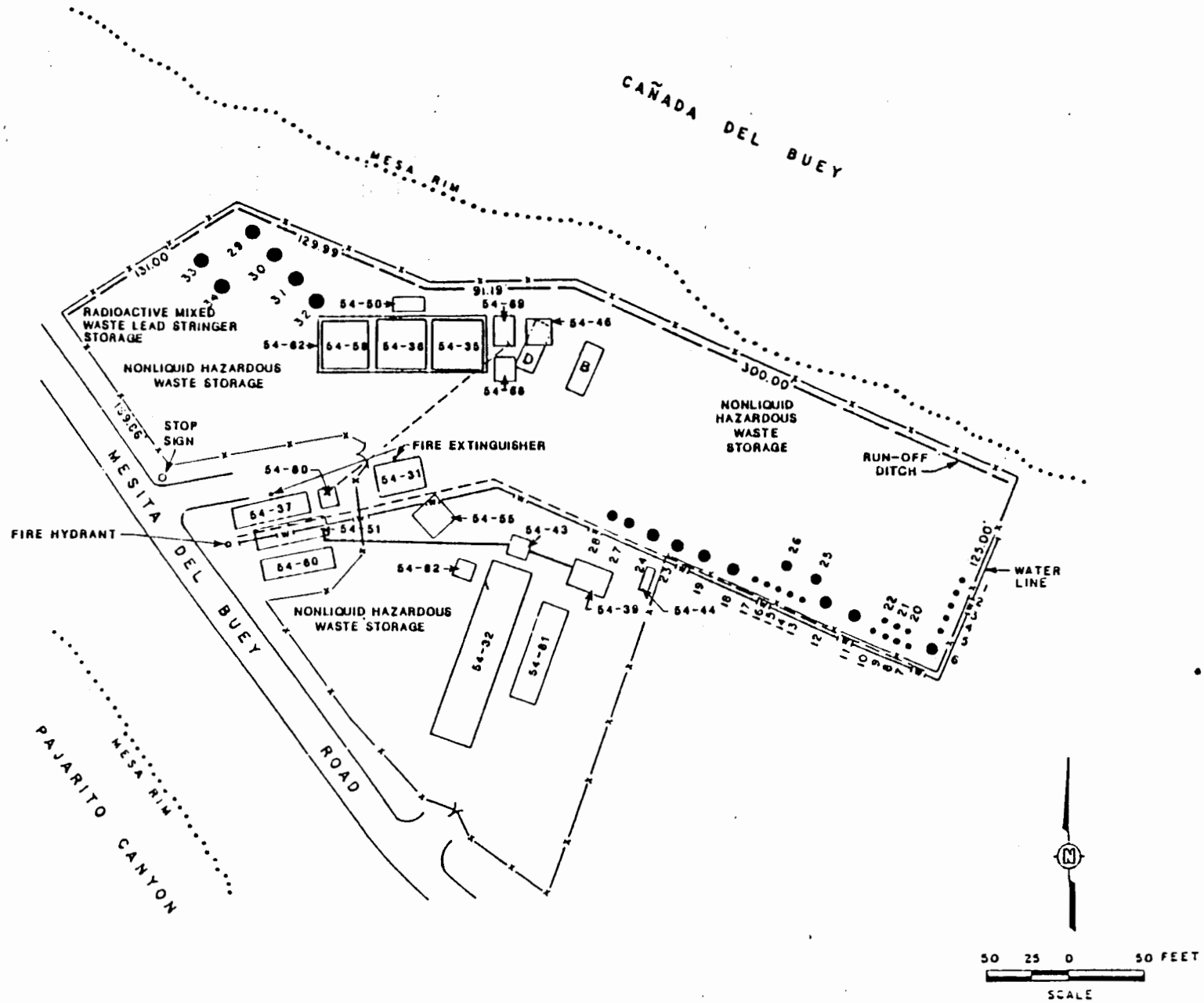

LEGEND

MATERIAL DISPOSAL UNITS:

54-31 PACKAGING BUILDING
54-32 ROOFED WASTE STORAGE PAD
54-35 TREATMENT PAD
54-36 SAMPLING PAD
54-37 OFFICE TRAILER
54-39 PCB BUILDING
54-43 SEPTIC HOLDING TANK
54-44 PROPANE TANK
54-46 EQUIPMENT STORAGE BUILDING
54-50 EQUIPMENT STORAGE BUILDING
54-51 OFFICE TRAILER
54-55 SAMPLE PREP LAB BUILDING
54-58 TRANSPORT PAD
54-60 OFFICE TRAILER
54-62 CANOPY OVER MD-35,MD-36,MD-58
54-68 MODULAR STORAGE BUILDING
54-69 MODULAR STORAGE BUILDING
54-80 SEPTIC HOLDING TANK
54-81 PCB OIL TANK STORAGE
54-82 DRUM CRUSHER
B SURFACE IMPOUNDMENT
D SURFACE IMPOUNDMENT

● LOCATION OF AREA L INACTIVE SHAFTS

FIGURE E.8.1.

TA-54 AREA L
WASTE MANAGEMENT UNITS

PREPARED FOR

LOS ALAMOS
NATIONAL LABORATORY
LOS ALAMOS, NEW MEXICO

IT ... Creating a Safer Tomorrow

© 1984 IT CORPORATION
ALL COPYRIGHTS RESERVED
Do Not Scale This Drawing

DRAWN BY | KCT 10/20/88 | CHECKED BY | APPROVED BY | DRAWING NUMBER 5012161 01 B1

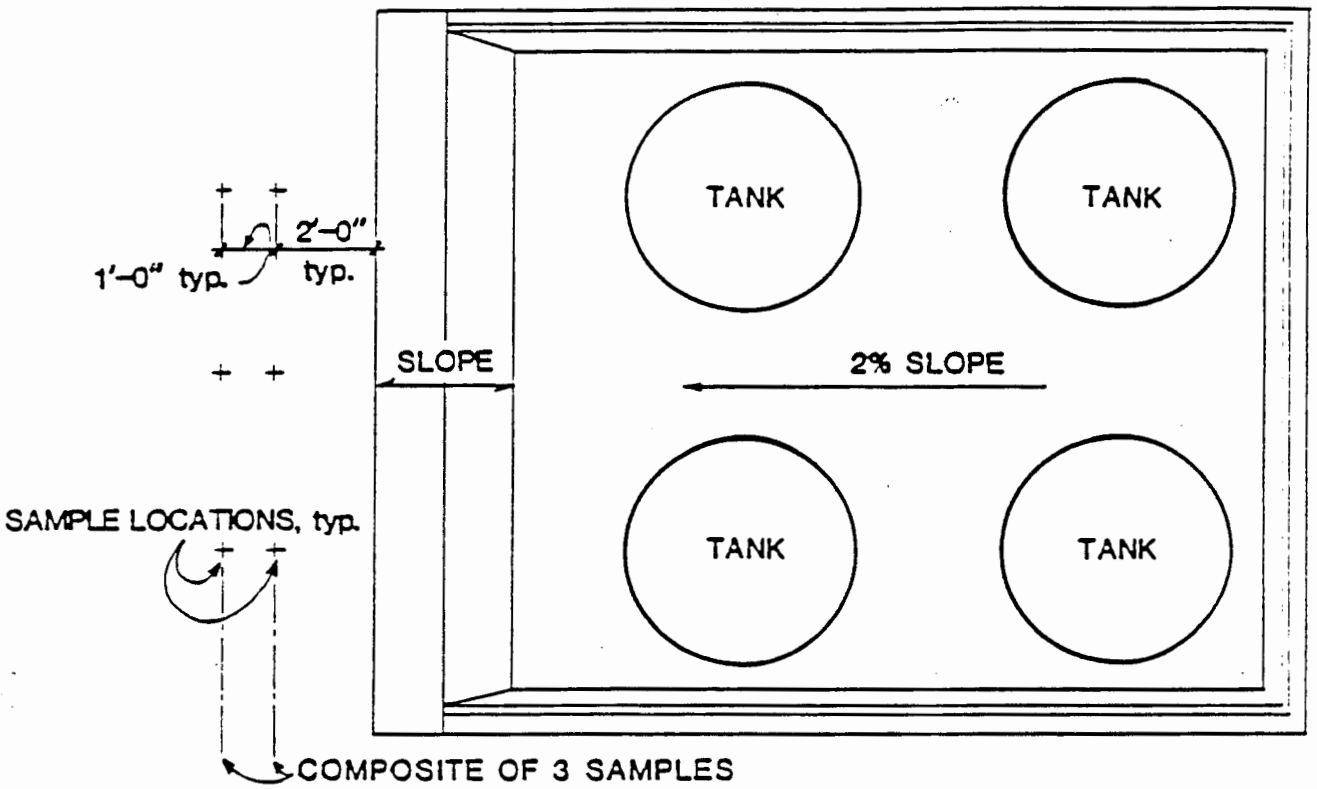

FIGURE E.8.2 TA-54 AREA L TREATMENT TANKS SAMPLE LOCATIONS

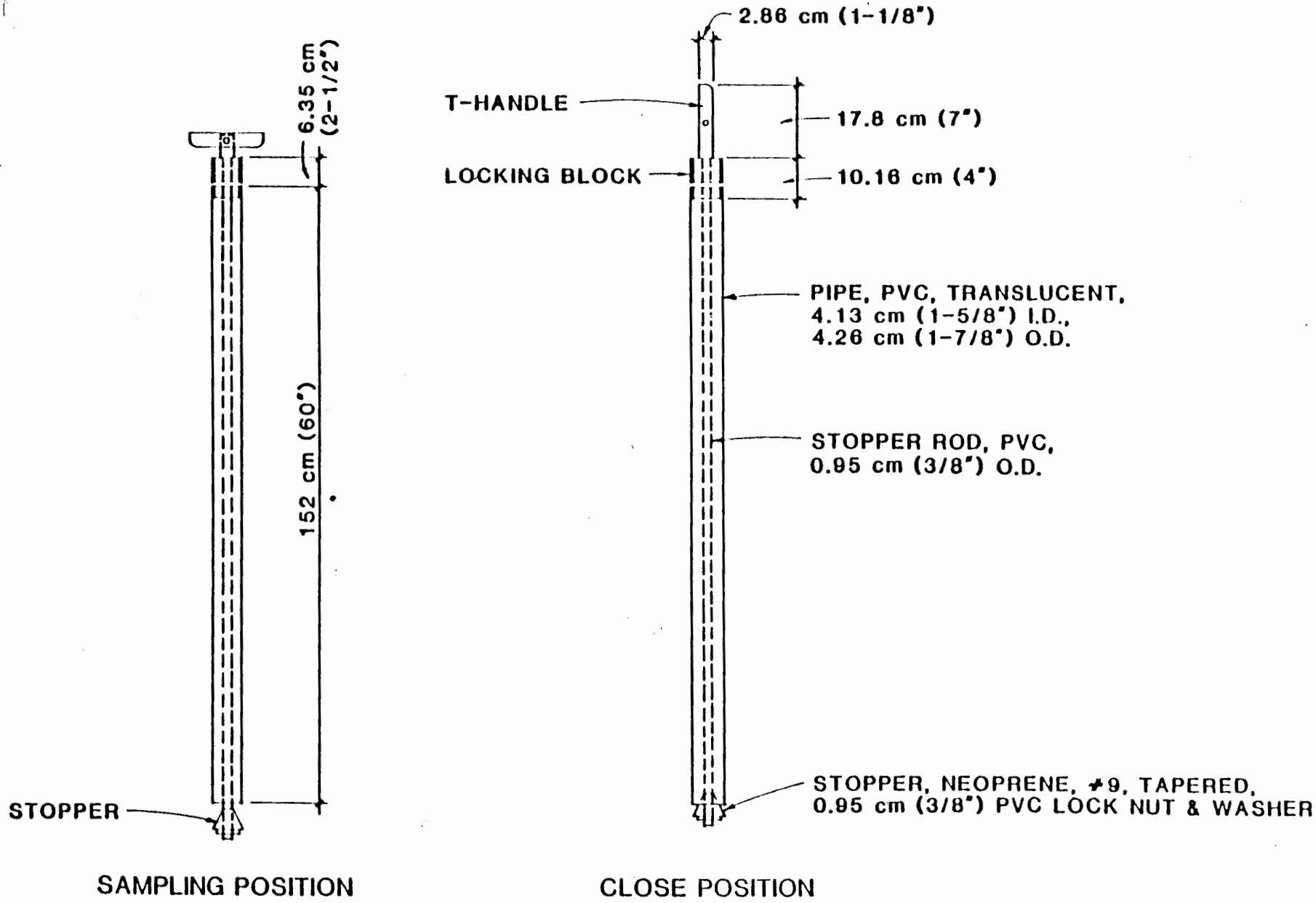

FIGURE E-8.3 COMPOSITE LIQUID WASTE SAMPLER (COLIWASA)

FIGURE E-8.4

EXAMPLE OF SAMPLE SEAL

OFFICIAL SAMPLE SEAL

Collected by _____ Collector's Sample No._____
(Signature)

Date Collected_____ Time Collected_____

Place Collected_____

_____

_____

FIGURE E-8.5

EXAMPLE OF SAMPLE LABEL

OFFICIAL SAMPLE LABEL

Collector_____ Collector's Sample No._____

Place. of Collection_____

_____

Date Sampled_____ Time Sampled_____

Field Information_____

_____

_____

FIGURE E-8.6
CHAIN OF CUSTODY RECORD

Hazardous Materials
Collector's Sample No.___

Location of Sampling: __Producer __Hauler
__Disposal Site
__Other:_____

_____

Company's Name _____Telephone (___)_____

Address_____
number street city state zip

Collector's Name_____Telephone (___)_____
signature

Date Sampled_____Time Sampled_____hours

Type of Process Producing Waste_____

Waste Type Code_____Other_____

Field Information_____

_____

_____

Sample Allocation:

1. _____
name of organization

2. _____
name of organization

3. _____
name of organization

Chain of Possession:

1. _____ _____ _____
signature title inclusive dates

2. _____ _____ _____
signature title inclusive dates

3. _____ _____ _____
signature title inclusive dates

CLOSURE PLAN
PERMIT ATTACHMENT E.9
NM 0890010515-1

E.9. Closure for TA-54 Area L Solidified Hazardous Waste Storage Unit

The storage unit is a specified area within the fenced portion of Technical Area 54, Area L, used for storage of solidified packaged waste. (Figure E.9.1) Approximately 60 percent of the area within the perimeter fence is designated for solidified waste storage. Solid contained wastes are stored on pallets, or otherwise elevated four inches, in cleared areas within the fenced portions of Area L. This closure plan applies only to this area.

Other storage units at Area L consist of a single story metal building, a roofed concrete containment structure, two transportable storage units and four treatment / storage tanks. These units are used for the accumulation, packaging, and storage of waste containers, which are generated throughout the laboratory and delivered to Area L routinely. Liquid wastes are segregated into compatible types and placed inside the transportable storage units , the metal building or within one of the six storage cells of the concrete containment structure. Wastes in small containers are put into lab-packs. Wastes suitable for recycling are consolidated into drums, and any damaged or leaking drums are repacked into larger drums in this area. Four tanks are located at Area L. They are used to neutralize, oxidize, and evaporate waste. The tanks are located on a bermed concrete pad.

E.9.1. Estimate of Maximum Waste in Storage and Treatment

No more than 3,600 55-gallon containers of solidified wastes will be stored within the fenced area at Area L.

E.9.2. Description of Waste Handled

A wide variety of wastes generated throughout the Laboratory are brought to Area L, including wastes from basic and applied chemistry R & D programs (small quantities of different acids, bases, organics, inorganics and reactive metals), processing wastes (sludge resulting from treatment either at Area L or at TA 50-1 Batch Waste Treatment Unit), and chemically contaminated equipment, to be stored, recycled, treated or packed for off site disposal at a permitted facility.

E.9.3. Closure Procedures

E.9.3.1. Partial Closure

Partial closure would be the change in use of a portion of the designated area from solidified storage to another use such as a new building. Should this occur, all portions of this plan shall apply to the closing area.

E.9.3.2. Closure Procedure

Cleanup and closure will be done in sequential order, culminating in the disposal of any residues or contaminated material by shipment off site to a permitted facility.

Before decontamination, all wastes in storage will either be treated on site or disposed of off site. Given the diversity of wastes handled, it is not possible to estimate the exact wastes on hand at the initiation of closure and, therefore, the final disposition of the wastes. In general, recyclable wastes will be reused internally or recycled to users off site. Permitted wastes will be burned at the permitted incinerator at TA-50-37. Any wastes compatible with permitted treatment at the TA-50-1 Batch Waste Treatment Unit or the TA-54, Area L treatment tanks will be so treated. The remaining wastes will be transported off site to a permitted disposal facility. If on site treatment is not possible due to prior closure of the permitted units, off site disposal will occur.

E.9.3.3. Waste Removal

The waste on site at the start of closure will be only packaged solidified wastes. Contained wastes will be handled with hand trucks or forklifts. Trucks of adequate size will be used to move contained wastes to off site treatment or disposal facilities. All wastes shipped off site will be manifested in accordance with the facility permit. All waste transporters will have an EPA identification number in accordance with HWMR-5, amended 1989,, Part IV, Section 263.11.

E.9.4. Soil Decontamination

Soil sampling, as described in section E.9.9, will be conducted to determine if hazardous wastes have been tracked outside of containment areas. A sampling survey of the entire contained solid waste storage area within the TA-54, Area L fence will be conducted using a grid with 10 foot centers to determine the area of possible contamination. The survey will be performed by collecting a sample from the surface to six inches below ground surface at each grid point. Additional samples will be collected from areas with visible contamination (i.e., soil discoloration). If the initial surface grid sample analysis indicates contamination, additional sampling at the same points at one foot depth will be performed to determine the depth of contamination. If contamination is determined on the surface, additional sampling will be conducted by reducing the grid distance by one-half and taking additional surface samples, dictating by terrain, until the contaminated area is defined. If contamination is found at the outside grid samples, the limits of the grid will be expanded to determine the outside perimeter of contamination, to include areas outside of the perimeter fence and at the discharge point of the run off ditch. The contaminated soil will then be removed and handled as a regulated waste. The adequacy of decontamination is determined by additional sampling. Sampling, analysis, and documentation procedures are detailed in section E.9.9.

Soil and sediment samples will be analyzed for all HWMR-5, amended 1989,, Part V, Appendix IX constituents. Analysis and quality assurance/quality control will follow methods defined in SW-846. The approach to soil decontamination depends on the extent of contamination determined by the sampling. If the sample survey indicates that there are no contaminated soil areas, no further soil decontamination action will be taken at the site. If the soil is contaminated, it will be placed in drums or sealed in dump trucks for off site disposal at a permitted facility.

E.9.5. Personnel Protection

Personnel who are washing equipment will wear rubber gloves, neoprene acid/solvent resistant coveralls, rubber boots, and a face shied. The Laboratory's Industrial Hygiene Group (HSE-5) will review the site survey analytical data and recommend additional protective clothing if necessary.

E.9.6. Equipment Decontamination

Shovels, drum trucks and other equipment used for decontamination will be scraped and brushed to remove residue, and the residue collected will be placed in drums for disposal off site at a permitted facility. The equipment will be placed on a plastic sheet that is bermed to contain liquids and washed with water and detergent. Large equipment such as backhoes and forklifts will also be washed. Testing will be performed on this water to determine if decontamination is adequate. Washing to considered adequate to decontaminate the equipment. The wash water will be allowed to evaporate in the permitted evaporation tanks and the plastic and residue will be packed in drums for off site disposal at a permitted facility.

E.9.6.1. Decontamination Verification

Samples of soil and decontamination wash water will be analyzed for the constituents in HWMR-5, amended 1989,, Part V, Section 264, Appendix IX. Soils containing levels of contamination above the background will be considered contaminated and removed as hazardous waste.

Decontamination of the site soil will be demonstrated by additional sampling. Because removal of contaminated soil will leave an exposed surface, the disturbed surface will be resampled in the same places used to define the contaminated area. Analysis and the determination of contamination is as previously discussed, and reanalysis will be conducted only for those constituents that caused the area to be determined contaminated.

A minimum of two samples of the clean Liquinox (@) or Alconox (@) solution will be sampled as background for wash water and, along with the wash water samples, analyzed for the constituents listed in HWMR-5, amended 1989,, Part V, Section 264, Appendix IX.

Successful decontamination is defined as:

1. No detectable hazardous constituents in the final sample, or
2. Detectable hazardous constituents in the final sample are equal to or less than, at the 0.01 confidence interval, to their concentration in the unused washwater or background sample.

An alternative demonstration of decontamination may be proposed and justified at the time of closure as circumstances indicate. The Director will evaluate the proposed alternative in accordance with the standards and guidance then in effect and, if approved, incorporate by permit modificaton the alternative into the closure plan.

E.9.7. Closure Schedule

The year of closure is 2100. Soil survey, contracting and closure activities will observe the schedule given in Table E.9.1.

Soil sampling and the decontamination contractor selection may be completed before closure begins. Closure is estimated to take 340 days.

Contracts for analytical work and, if necessary, soil removal are expected to exceed $100,000. The Laboratory is required by policy to put the work out for bid, and ninety days are required to solicit and process the bids. The location of the site is prone to snow cover in the winter months. The closure may be delayed until the site is free of snow and the ground is thawed adequately to allow the soil sampling and other closure operations. The schedule includes a weather factor to allow for this delay.

E.9.8. Closure Certification

An independent registered professional engineer and the owner/operator of the facility shall witness the closure and ensure that the closure follows this plan. Upon completion of closure, the engineer and the DOE shall prepare a letter certifying that the area has been closed accordingly. The letter shall be dated and signed by each party and stamped by the registered engineer, and the original copy shall be submitted by the DOE to the Director of the NMEID. One copy shall be maintained at the DOE offices and one copy maintained by the HSE-8 Regulatory Compliance Section.

E.9.9. Sampling and Analytical Procedure

The following section defines procedures and methods for sampling, analysis and documentation applicable to closure plans. While the procedures and method are specific, any applicable procedure or method given in SW-846 may be used if conditions or experience shows the alternate method to be more appropriate. Disposable samplers may be used.

Containers appropriate for the analyses requested will be used. Sampling will be conducted in accordance with procedures given in *Samplers and Sampling Procedures for Hazardous Waste Streams*, EPA 600/2-80-018, and/or SW 846.

Samples will be taken, placed in bottles, sealed, tagged, and immediately packed in vermiculite, sawdust, or, if refrigeration is required, an insulated container with ice. One sample for every ten samples will be either duplicated or split. The duplicated or split sample will be identified by a code so that its source is not available to the analytical laboratory, but analytical results can be compared to its twin.

E.9.9.1. Soil Sampling

The sampling procedures outlined below are used to determine the amount of hazardous material deposited on a particular area of land, or to determine the leaching rate of the material, or determine the residue level on the soil. Adequate preparation ensures that proper sampling is accomplished.

Surface soil samples will be collected with a trowel or scoop. To sample below 3 in. (8 cm), samples will be collected with a Veihmeyer soil sampler.

E.9.9.1.1. Cleaning of Sampler

It is important to clean the samplers after each site is sampled. An unused disposable sampler may be presumed clean if still in a factory sealed wrapper. Unsealed samplers will be cleaned prior to use. The samplers will be washed with a warm Liquinox (@) or Alconox (@) solution, rinsed several times with tap water,

rinsed with distilled water, drained of excess water, and air-dried or wiped dry. Prevention of cross-contamination is of particular importance in these samples.

E.9.9.1.2. Sampling Procedures

Trowel or Scoop

- Take small, equal portions of sample from the surface or near the surface of the material to be sampled.
- Combine the samples in a glass container.
- Cap the container, attach a label and seal, record in field log book, and complete the sample analysis request sheet and chain-of-custody record.

Veihmeyer Sampler

- Assemble the sampler by screwing in the tip and drive head on the sampling tube.
- Insert the tapered handle (drive guide) of the drive hammer through the drive head.
- Place the sampler in a perpendicular position on the material to be sampled.
- With the left hand holding the tube, drive the sampler into the material to the desired sampling depth by pounding the drive head with the drive hammer. Do not drive the tube further than the tip of the hammer's drive guide.
- Record the length of the tube that penetrated the material.
- Move the drive hammer onto the drive head. In this position, the hammer serves as a handle for the sampler.
- Rotate the sampler at least two revolutions to shear off the sample at the bottom.
- Lower the sampler handle (hammer) until it just clears the two ear-like protrusions on the drive head and rotate about 90 degrees.
- Withdraw the sampler from the ground by pulling the handle (hammer) upwards. When the sampler cannot be withdrawn by hand, as in deep soil sampling, use a pullerjack and grip.
- Dislodge the hammer from the sampler, turn the sampler tube upside down, tap the head gently against the hammer, and carefully recover the sample from the tube. The sample should slip out easily.
- Store the core sample in a 1,000 or 2,000 ml (1 qt or l/2 gal) sample container.
- Label the sample, affix the seals, record in the field log book, complete the sample analysis request sheet and chain-of-custody record, and deliver the samples to the laboratory for analysis.

E.9.9.2. Liquid Sampling

A Coliwasa sampler or similar device will be used to sample water solutions in order to determine background parameters before washing the area; it will also be used to sample the dirty wash water used in cleaning equipment. The recommended model of the Coliwasa is shown in Figure E.9.2, the main parts consisting of the sampling tube, the closure-locking mechanism, and the closure system. As an alternative to the Coliwasa, glass tubes may be used to sample liquids. The primary advantage in using a glass tube is that the tube will be disposed of as hazardous waste after each sample is collected, thus eliminating the potential for cross-contamination.

E.9.8.2.1. Cleaning of Sampler

The sampler must be clean before use. An unused disposable sampler may be presumed clean if still in a factory sealed wrapper. Unsealed samplers will be cleaned prior to use. The used sampler must be washed with a warm detergent solution (Liquinox (@) or Alconox (@)), rinsed several times with tap water, rinsed with distilled water, drained of excess water, and air-dried or wiped dry. A necessary piece of equipment for cleaning the tube of the Coliwasa is a bottle brush that fits tightly inside the diameter of the tube. The brush is connected to a rod of sufficient length to reach the entire length of the sampler tube. Using the ramrod and fiber reinforced paper towels, the Coliwasa tube may be quickly cleaned. Improper cleaning of sample equipment will cause cross-contamination of samples. Prevention of contamination is of particular importance in these samples. Clean samplers should be stored in polyethylene plastic tubes or bags in a clean an protected area.

E.9.9.2.2. Sampling Procedures

- Assemble the Coliwasa sampler.
- Make sure that the Coliwasa sampler is clean.
- Check to make sure the sampler is functioning properly. Adjust the locking mechanism, if necessary, to make sure the neoprene rubber stopper provides a tight closure.
- Wear necessary protective clothing and gear and observe required sampling precautions.
- Put the sampler in the open position by placing the stopper rod handle in the T-position and pushing the rod down until the handle sits against the sampler's locking block.
- Slowly lower the Coliwasa sampler into the liquid at a rate that permits the levels of the Liquid inside and outside the sampler tube to be about the same. If the level of the liquid in the sampler tube is lower than that outside the sampler, the sampling rate is too fast and will result in a non-representative sample.
- When the sampler stopper hits the bottom of the liquid container, push the sampler tube downward against the stopper to close the sampler. Lock the

sampler in the closed position by turning the T-handle until it is upright and one end rests tightly on the locking block.

- Slowly withdraw the sampler from the container with one hand while wiping the sampler tube with a disposable cloth with the other hand.

- Carefully discharge the sample into a glass container by slowly opening the sampler. This is done by slowly pulling the lower end of the T-handle away from the locking block while the lower end of the sampler is positioned in the glass container.

- Cap the glass container, attach a label and seal, record in the field log book, and complete the sample analysis request sheet and chain-of-custody record.

- Unscrew the T-handle of the sampler and disengage the locking block. Clean the sampler on site or store the contaminated parts of the sampler in a plastic storage tube or bag for subsequent cleaning. Store used rags in plastic bags for subsequent disposal.

E.9.9.3. Sample Handling and Documentation

Soil and liquid samples will be analyzed either at LANL or at a commercial laboratory. In either case, each sample will be labeled, sealed, and accompanied by a chain-of-custody and a sample analysis request form.

The sample container must be sealed with a gummed paper seal attached to the container in such a way that the seal must be broken in order to open the container. The seal and sample tag must be completed with a waterproof pen. An example of a sample seal is shown in Figure E.9.3.

The sample label is necessary to prevent misidentification of samples and shall include, if applicable, the grid number referenced to positions staked on the site perimeter. The "field information" in the case of soil sampling, shall include observations such as the soil texture and surface appearance, ambient temperature and cloud cover at time of sampling, and precipitation conditions 24 hours before sampling. An example of a sample label is shown in Figure E.9.4.

The chain-of-custody form is necessary to trace sample possession from the time of collection and must accompany every sample. This record becomes especially important when the sample is to be introduced as evidence in litigation. This is a two page record with the original accompanying shipment and the copy is retained by the Laboratory. An example of this form is shown in Figure E.9.5.

A separate closure sampling field log book will be kept and will contain all information pertinent to field surveys and sampling. The log book shall have bound and consecutively numbered pages in 8-l/1 by 11-inch format. Minimum entries include:

a. Purpose of sample (routine sampling, special sampling)

b. Location of sampling (coordinates referenced to staked field points, if soil sample)

c. Name and address of person making log entry

d. Type of process producing waste

e. Number and volume of sample

f. Description of each sampling location, sampling methodology, equipment used, etc.

g. Date and time of sample collection

h. Sample destination and transporter's name (name of laboratory, UPS, etc)

i. Map or photograph of the sampling site, if any

j. Field observations (ambient temperature, sky conditions, past 24-hour precipitation, etc)

k. Field measurements, if any (pH, flammability, conductivity, explosivity, etc).

l. Collector's sample identification number(s)

m. Signature of person responsible for the log entry.

Sampling situations vary widely. No general rule can be given as to the extent of information that must be entered in the log book. A good rule, however, is to record sufficient information so that someone can reconstruct the sampling situation without relying on the collector's memory.

The sample shipment and chain-of-custody record is accompanied by a sample analysis request sheet. The request sheet has two parts: field and laboratory. The field portion of this form must be completely by the person collecting the sample and include most of the pertinent information noted in the log book. The laboratory portion is intended to be completed by the laboratory personnel when the sample is received.

E.9.10. Quality Assurance/Quality Control

The Permittee shall designate a qualified individual or individuals to independently oversee the closure activities and report directly to senior management on the quality of the performance of this closure. This individual will personally observe a portion of the key activities, assure that sample blanks are used and analyzed and review the analysis reports for accuracy and adequacy. A written QA/QC plan shall be prepared and followed, with variations from the plan documented and explained. The designated individual shall prepare a written statement for the final report commenting on the adequacy of the analysis showing decontamination.

E.9.11. Final Closure Report

Upon completion of the closure activities, the Permittee shall submit a Final Closure Report to the Director. The report shall document the final closure and contain, at a minimum, the following:

A. The certification described in paragraph E.9.8.
B. Any variance from the approved activities and the reason for the variance.
C. A tabular summary of all sampling results, showing:
   1. Sample identification
   2. Sampling location
   3. The datum reported,
   4. Detection limit for each datum,
   5. A measure of analytical precision (e.g. uncertaintity, range, variance),
   6. Identification of analytical procedure, and
   7. Identification of analytical laboratory.
D. A QA/QC statement on the adequacy of the analyses and the decontamination demonstration.
E. The location of the file of supporting documentation:
   1. Field logbooks,
   2. Laboratory sample analysis reports,
   3. The QA/QC documentation, and
   4. Chain of custody records.
F. Disposal location of all regulated and nonregulated residues.
G. A certification of accuracy of the report.

TABLE E.9.1

CLOSURE SCHEDULE

PRECLOSURE ACTIVITIES	MAXIMUM TIME REQUIRED
Notify the EID of closure	-90 days
Advertise contract request for proposals	-90 days
Receive proposals	-20 days
Award contract	-10 days
CLOSURE ACTIVITIES	
Begin Closure	Day 0
Analyze first soil samples	Day 60
Conduct second soil samples survey, if needed	Day 90
Treat or remove final wastes	Day 90
Analyze second soil samples, if needed	Day 120
Contract for soil decontamination	Day 210
Remove soil	Day 240
Conduct verification samples	Day 270
Analyze samples	Day 310
Submit final report to EID	Day 340

NOTES:

The calendar days above are completion dates for each activity. In some cases more than one activity may be taken concurrently.

This schedule applies to both partial and final closure.

TABLE E.9.2.

ANALYTICAL PARAMETERS

METALS	ORGANICS
Arsenic	Halogenated volatile organics
Barium	Nonhalogenated volatile organics
Cadmium	Acid-extractable semivolatile organics
Chromium	Base-neutral extractable semivolatile organics
Lead	Organochlorine pesticides
Mercury	Chloronated herbicides
Selenium	Phenols
Silver	
Nickel	
Berylium	

OTHER

Cyanides
pH

NOTES:

Analytical methods are taken from *Test Methods for Evaluating Solid Waste*, EPA SW-846, and may be superseded by more current or alternate methods from SW-846 or alternate EPA-approved methods.

Metals may be analyzed for total content. Any metal whose total concentration exceeds the standard for Extraction Procedure Toxicity shall be analyzed by Extraction Procedure Toxicity procedures. Both data shall be reported in the final report.

TABLE E.9.3.

SAMPLING SUMMARY

MATERIAL SAMPLED	METALS	ORGANICS	OTHER
Washdown solutions before use	X	X	X
Washdown solutions after use	X	X	X
Soils background	X	X	X
Soil samples	X	X	X
Final decontamination samples	*	*	*

NOTES:

Analytical parameters are given in Table E.9.2.

* Parameters given in HWMR-5, Part V, Section 264, Appendix IX

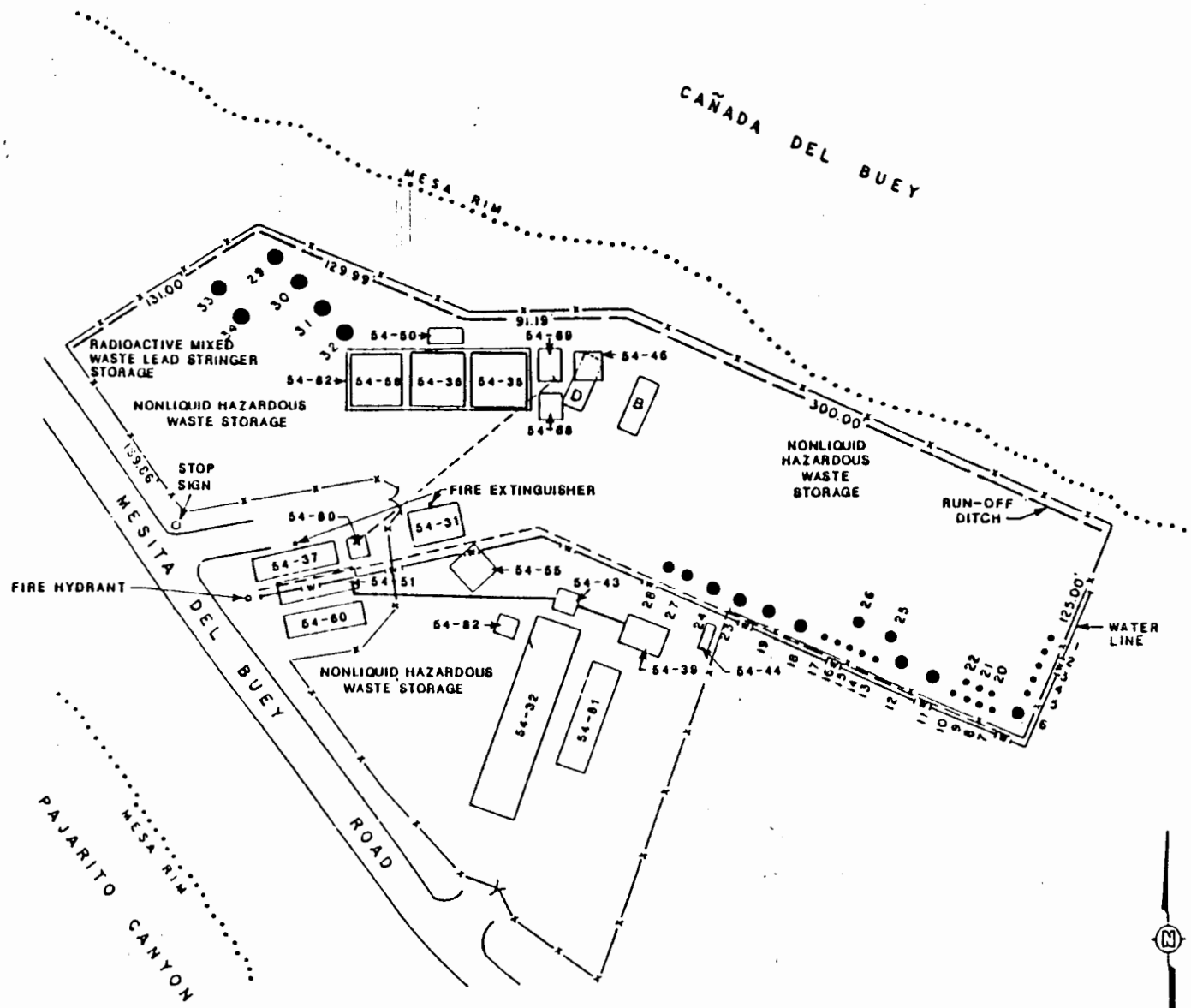

LEGEND

MATERIAL DISPOSAL UNITS:

54-31 PACKAGING BUILDING
54-32 ROOFED WASTE STORAGE PAD
54-35 TREATMENT PAD
54-36 SAMPLING PAD
54-37 OFFICE TRAILER
54-39 PCB BUILDING
54-43 SEPTIC HOLDING TANK
54-44 PROPANE TANK
54-46 EQUIPMENT STORAGE BUILDING
54-50 EQUIPMENT STORAGE BUILDING
54-51 OFFICE TRAILER
54-55 SAMPLE PREP LAB BUILDING
54-58 TRANSPORT PAD
54-60 OFFICE TRAILER
54-62 CANOPY OVER MD-35,MD-36,MD-58
54-68 MODULAR STORAGE BUILDING
54-69 MODULAR STORAGE BUILDING
54-80 SEPTIC HOLDING TANK
54-81 PCB OIL TANK STORAGE
54-82 DRUM CRUSHER
B SURFACE IMPOUNDMENT
D SURFACE IMPOUNDMENT

● LOCATION OF AREA L INACTIVE SHAFTS

FIGURE E.9.1.

TA-54 AREA L
WASTE MANAGEMENT UNITS

PREPARED FOR

LOS ALAMOS
NATIONAL LABORATORY
LOS ALAMOS, NEW MEXICO

IT ... Creating a Safer Tomorrow

DRAWN BY | KCS 10/20/88 | CHECKED BY | APPROVED BY | DRAWING NUMBER 5012161 01 B1

© 1984 IT CORPORATION
ALL COPYRIGHTS RESERVED
Do Not Scale This Drawing

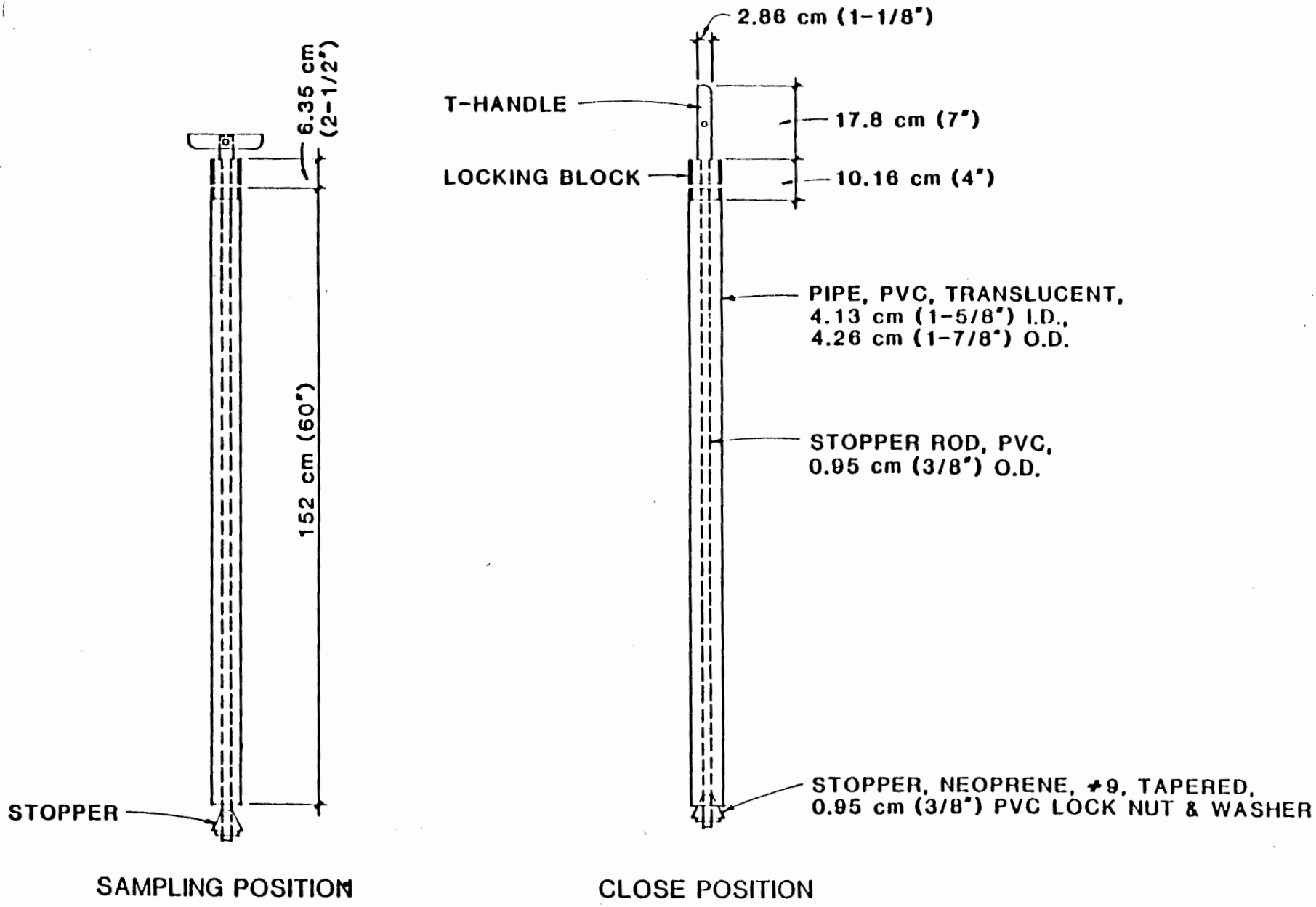

FIGURE E-9.2 COMPOSITE LIQUID WASTE SAMPLER (COLIWASA)

FIGURE E-9.3
EXAMPLE OF SAMPLE SEAL

OFFICIAL SAMPLE SEAL

Collected by _____ Collector's Sample No._____
(Signature)

Date Collected_____ Time Collected_____

Place Collected_____

_____

_____

FIGURE E-9.4
EXAMPLE OF SAMPLE LABEL

OFFICIAL SAMPLE LABEL

Collector_____ Collector's Sample No._____

Place. of Collection_____

_____

Date Sampled_____ Time Sampled_____

Field Information_____

_____

_____

FIGURE E-9.5
CHAIN OF CUSTODY RECORD

Hazardous Materials
Collector's Sample No.___

Location of Sampling: __Producer __Hauler
__Disposal Site
__Other:_____

_____

Company's Name _____Telephone (___)_____

Address_____
number street city state zip

Collector's Name_____Telephone (___)_____
signature

Date Sampled_____Time Sampled_____hours

Type of Process Producing Waste_____

Waste Type Code_____Other_____

Field Information_____

_____

_____

Sample Allocation:

1. _____
name of organization

2. _____
name of organization

3. _____
name of organization

Chain of Possession:

1. _____ _____ _____
signature title inclusive dates

2. _____ _____ _____
signature title inclusive dates

3. _____ _____ _____
signature title inclusive dates

CONTAINER MANAGEMENT

PERMIT ATTACHMENT F

NM0890010515-1

CONTAINER MANAGEMENT
ATTACHMENT F

F.1 Container Packaging, Sampling, and Labeling

F.1.1 Container Packaging and Transport

When chemical substances are declared to be in excess, the originating group completes a Chemical Waste Disposal Request (Form H-1) and sends the form to the Waste Management Group (HSE-7). The request lists the chemical waste the generating group needs to dispose of, the quantity and physical form of the wastes, and other pertinent information such as the condition of the containers. Material Safety Data Sheets (MSDS's) and existing analytical data may also be available. The containers described will range from two ounce bottles of unusable chemical to 330-gallon Tuff-Tanks of plating material.

The Chemical Waste Disposal Request form is reviewed for adequacy of information and assignation of segregation codes, DOT information, and EPA codes. It is then used by HSE-7 personnel as the shipping form when the waste is collected. HSE-7 personnel then visit the generating site to package the waste for transport to TA-54, Area L. All waste is transferred in accordance with the Laboratory's On-Site Transportation Manual.

Small containers of waste (<5 gallon size), will be overpacked in either a DOT approved cardboard box or plastic or metal drum with absorbent material (referred to as labpacks). Vermiculite will be the most commonly used absorbent; however, the organic waste is compatible with absorbents such as corncobs and sawdust. These absorbents may be used for this category of waste since in cases of contamination of the absorbent incinerators prefer to receive a more combustible material than vermiculite. Containers that will be composited at TA-54, Area L will be sorted and packaged separately from those that will remain in labpacks for storage.

Drums and Tuff-Tanks will be visually inspected for integrity before transport. If the drum is unacceptable it will be repackaged or overpacked prior to transport. The wastes are transported on either a three-ton or one-ton flat bed truck.

Upon arrival at TA-54, Area L, the wastes are unloaded from the transport vehicle. Labpack waste will be temporary placed at the packaging building for labeling or compositing. Drums and Tuff-Tanks will be placed on either the sampling pad or storage pad for sampling and labeling.

F.1.2 Drum labeling, recording, and sampling system

Each unique package of waste, meaning labpack or drum, is labeled with the following information.

- chemical group number
- unique record number
- date of generation (If this information is not already on the container, the date from the Chemical Waste Disposal Request Form is used.)
- either an EPA hazardous waste label or the words hazardous waste

This information and the Chemical Disposal Request Form is provided to the resident data analyst. This individual creates a second record as part of the Hazardous Waste Database. All records are then maintained by the data analyst in accordance with the requirements of this permit.

Sampling of the waste is then performed as outlined in Permit Attachment A. The sampling pad is restricted to one family of chemicals at a time, for example organics. The group allowed at the time will be posted on the pad. This ensures that incompatible chemicals do not react in the containment basin of the

pad. Before a new family of chemicals is placed on the pad, the containment area will be cleaned. For this reason, the main sampling pad will generally be used for organic waste and acid/base waste will be sampled on the appropriate storage cell.

After all packages are labeled and/or sampled, they are moved to one of the Laboratory's storage areas. The permitted areas are defined in Permit Module III.

F.2 Storage Area Practices

F.2.1 Specific storage areas

The Laboratory has five groups of storage areas: two modular storage units and the main storage pad at TA-54, Area L, the modular storage units and two storage pads at TA-50, and the storage room at the incinerator. The usage of each of these units is discussed below.

F.2.1.1 Modular Storage Units, TA-54, Area L (TA-54-68 and -69)

The primary usage of the modular units will be for the storage of labpack waste, particularly those in fiberboard containers. After labeling, the labpacks are placed directly in the appropriate storage cell. Each modular unit has three cells allowing a maximum of six chemical family groups to be stored at any one time. However, multiple cells may be used for the same chemical family, such as two cells contain organic waste. Each cell will be labeled as to the chemical family stored there. If at any time the cell designation changes, such as from organic to reactive, the cell will first be cleaned to ensure that no organic residues remain that would create an incompatibility problem during a spill.

F.2.1.2 Storage Pad at TA-54, Area L (TA-54-32)

Material stored on the storage pad at TA-54, Area L will generally be placed there after labeling and sampling. This may not be the case for acids and bases where the storage cell is also used as the sampling pad. The pad is divided into six cells allowing the storage of six families of chemicals. However, more than one cell may be used for the same chemical type. All cells will be labeled as to which chemical type is stored there. If at any time it is necessary to change the designation of a cell, it will first be cleaned to remove any residues that might produce an unfavorable reaction with the new chemical type.

F.2.1.3 Modular Storage Units at TA-50 (TA-50-114, -137, and -138)

The modular storage units at TA-50 will be used primarily to store acid and base wastes that will be treated at the Batch Waste Treatment Unit. Each cell will be labelled acid or base to indicate the type of waste stored there. If at any time the designation of a cell needs to be changed, the cell will first be cleaned to ensure that incompatibility residues have been removed. All waste stored here will have been labeled and sampled at TA-54, Area L.

F.2.1.4 Storage Pads at TA-50 (TA-50-139 and -140)

Two large storage pads will be located at TA-50. Each pad will have six divisions capable of storing six types of chemicals. Multiple cells may be used for the same chemical type. Each cell will be labeled to indicate the type of chemical stored there. If a cell designation needs to be changed, the cell will first be cleaned to remove any residues that might result in an incompatibility problem. All waste stored at this location will have been labeled and sampled at TA-54, Area L.

F.2.1.5 Storage Room at TA-50-37, Room 117

The storage room at TA-50-37 is divided into two areas, one for solids and one for liquids. The liquid side is further divided into two cells. Therefore, up to three chemical types may be stored at any one time. Cells will be labeled as to the chemical type stored there. If at any time the cell designation needs to be changed, the cell will be cleaned to remove any incompatible residues. Generally, only waste that is already approved for onsite incineration will be stored here. This means the waste has not only be sampled and labeled but also analyzed per Permit Attachment A. However, if the need should arise, the area will be used for compatible waste for which analytical results are pending. All labeling and sampling will have occurred at TA-54, Area L. The primary chemical type stored here will be organic waste. If small quantities of other waste types, such as oxidizers, are to be incinerated, it will generally be delivered the day of the burn to avoid storage in this room.

F.2.2 General Container Management Practices

All recycable materials are stored as hazardous waste until such time as they are recycled. They are placed in the same segregated storage areas as the other waste.

Any bulging drums are handled in accordance with accepted practice and Laboratory procedures. Generally this means that such practices as slowly venting the drum as it is being opened and personnel wearing protective clothing and splash guards will be followed.

Any spills resulting from the transfer/storage of waste will be cleaned up in accordance with Attachment D.

Inspections will be conducted in accordance with Attachment B.

Offsite shipments of waste will occur at either the given storage area directly or from the transport pad at TA-54, Area L. This will avoid unnecessary transport on Pajarito Road.

Repackaging of waste will generally occur adjacent to the storage area the waste was removed from. Repackaging can range from overpacking a leaking container to offsite contractors repackaging the labpack waste to meet incinerator specifications.

Permit Module III provides additional requirements such as required aisle space for all storage in container areas.

AUTHORIZED WASTES

PERMIT ATTACHMENT G

NM0890010515-1

Continued from page 2.
NOTE Photocopy this page before completing if you have more than 26 wastes to list.

Form Approved OMB No. 158-S3CC04

EPA I.D. NUMBER (enter from page 1)	FOR OFFICIAL USE ONLY
W N M D 0 8 9 0 0 1 0 5 1 5	W DUP 1 2 DUP

DESCRIPTION OF HAZARDOUS WASTES (continued)

LINE NO.	A. EPA HAZARD. WASTE NO. (enter code)	B. ESTIMATED ANNUAL QUANTITY OF WASTE	C. UNIT OF MEASURE (enter code)	D. PROCESSES 1. PROCESS CODES (enter)	2. PROCESS DESCRIPTION (if a code is not entered in D.1.)
1	D001	100,000	P	S01 T03	
2	D002	320,000	P	S01 T01	
3	D003	35,000	P	S01 T01 T04	Reacted at TA-16 (See III C.)
4	D003	5,000	P	S01 T01	Lithium Hydride only +
5	D004	2,000	P	S01 T01	
6	D005	60,000	P	S01 S02 T01	Sand from cleanout of explosive burn pads.
7	D006	1,000	P	S01 T01	
8	D007	1,500	P	S01 T01	
9	D008	50,000	P	S01 T01	May contain other metals (D004-D011
10	D009	15,000	P	S01 T01	
11	D010	7500	P	S01 T01	
	D011	7500	P	S01 T01	
13	D012	1000	P	S01 T03	
14	D016	1,000	P	S01 T03	
15		END OF D DESIGNATOR			
16					
17					
18					
19					
20					
21					
22					
23					
25					
26					

Continued from page 2.
NOTE Photocopy this page before completing if you have more than 26 wastes to list.

Form Approved OMB No. 158-S80C04

EPA I.D. NUMBER (enter from page 1)	FOR OFFICIAL USE ONLY
W N M D 0 8 9 0 0 1 0 5 1 5	W DUP 2 DUP

V DESCRIPTION OF HAZARDOUS WASTES (continued)

LINE NO.	A. EPA HAZARD. WASTE NO. (enter code)	B. ESTIMATED ANNUAL QUANTITY OF WASTE	C. UNIT OF MEASURE (enter code)	D. PROCESSES 1. PROCESS CODES (enter)	D. PROCESSES 2. PROCESS DESCRIPTION (if a code is not entered in D.1.)
1	F001	10,000	P	S01 S02 T03 T04	Solidified if treatment standards are met
2	F002	75,000	P	S01 S02 T03 T04	
3	F003	150,000	P	S01 S02 T03 T04	
4	F004	500#	P	S01 T03	
5	F005	15,000	P	S01 S02 T03 T04	
6	F006	500#	P	S01 T01	
7	F007	12,500	P	S01 T01	
8	F008	1,000	P	S01 T01	
9	F009	6,000	P	S01 T01	
10	F027	700	P	S01 T03	
11	F028	700	P	S01 T03	
12		END OF F DESIGNATOR			
13					
14					
15					
16					
17					
18					
19					
20					
21					
22					
23					
24					
25					
26					

Continued from page 2.
NOTE: Photocopy this page before completing if you have more than 26 wastes to list.

Form Approved OMB No. 158-S80004

EPA I.D. NUMBER (enter from page 1)	FOR OFFICIAL USE ONLY
W N M 0 8 9 0 0 1 0 5 1 5 — 1	W DUP — 2 DUP

IV. DESCRIPTION OF HAZARDOUS WASTES (continued)

LINE NO.	A. EPA HAZARD. WASTE NO. (enter code)	B. ESTIMATED ANNUAL QUANTITY OF WASTE	C. UNIT OF MEASURE (enter code)	D. PROCESSES 1. PROCESS CODES (enter)				2. PROCESS DESCRIPTION (If a code is not entered in D(1))
1	K044	20,000	P	S01	T04			
2	K047	500*	P	S01	T04			
3	K045	2,000	P	S01	T04			+
4		END. OF DESIGNATOR						
5								
6								
7								
8								
9								
10								
11								
12								
13								
14								
15								
16								
17								
18								
19								
20								
21								
22								
23								
24								
25								
26								

Continued from page 2.
NOTE: Photocopy this page before completing if you have more than 26 wastes to list.

Form Approved OMB No. 158-S8

EPA I.D. NUMBER (enter from page 1)	FOR OFFICIAL USE ONLY	
W N M 0 8 9 0 0 1 0 5 1 5	W DUP	DUP

19. DESCRIPTION OF HAZARDOUS WASTES (continued)

LINE NO.	A. EPA HAZARD. WASTE NO. (enter code)	B. ESTIMATED ANNUAL QUANTITY OF WASTE	C. UNIT OF MEASURE (enter code)	D. PROCESSES 1. PROCESS CODES (enter)	2. PROCESS DESCRIPTION (if a code is not entered in D.1.)
1	P001	1,000	P	S01 T03	
2	P002	1,000	P	S01 T03	
3	P003	1,000	P	S01 T03	
4	P004	1,000	P	S01 T03	
5	P005	1,000	P	S01 T03	
6	P006	1,000	P	S01 T04	
7	P007	1,000	P	S01 T03	
8	P008	1,000	P	S01 T03	
9	P009	1,000	P	S01 T04	
10	P010	1,000	P	S01	
11	P011	1,000	P	S01	
12	P012	1,000	P	S01	
13	P013	1,000	P	S01 T01	
14	P014	1,000	P	S01 T03	
15	P015	1,000	P	S01	
16	P016	1,000	P	S01 T03	
17	P017	1,000	P	S01 T03	
18	P018	1,000	P	S01 T03	
19	P020	1,000	P	S01 T03	
20	P021	1,000	P	S01 T01	
21	P022	1,000	P	S01 T04	
22	P023	1,000	P	S01 T03	
23	P024	1,000	P	S01 T03	
24	P026	1,000	P	S01 T03	
25	P027	1,000	P	S01 T03	
26	P028	1,000	P	S01 T03	

Continued from page 2.
NOTE. Photocopy this page before completing if you have more than 26 wastes to list.

Form Approved OMB No. 158-S80004

EPA I.D. NUMBER (enter from page 1)	FOR OFFICIAL USE ONLY
N M D 8 9 0 0 1 0 5 1 5 — 1	W — DUP — 2 — DUP

DESCRIPTION OF HAZARDOUS WASTES (continued)

LINE NO.	A. EPA HAZARD. WASTE NO. (enter code)	B. ESTIMATED ANNUAL QUANTITY OF WASTE	C. UNIT OF MEASURE (enter code)	D. PROCESSES 1. PROCESS CODES (enter)				D. PROCESSES 2. PROCESS DESCRIPTION (if a code is not entered in D.1.)
1	F 0 2 9	500#	P	S 0 1	T 0 1			
2	F 0 3 0	500#	P	S 0 1	T 0 1			
3	F 0 3 1	500#	P	S 0 1	T 0 4	T 0 3		
4	F 0 3 3	500#	P	S 0 1	T 0 4	T 0 3		
5	F 0 3 4	500#	P	S 0 1	T 0 3			
6	F 0 3 6	500#	P	S 0 1	T 0 3			
7	F 0 3 7	500#	P	S 0 1	T 0 3			
8	F 0 3 8	500#	P	S 0 1	T 0 3			
9	F 0 3 9	500#	P	S 0 1	T 0 3			
10	F 0 4 0	500#	P	S 0 1	T 0 3			
[illegible]	F 0 4 1	500#	P	S 0 1	T 0 3			
12	F 0 4 2	500#	P	S 0 1	T 0 3			
13	F 0 4 3	500#	P	S 0 1	T 0 3			
14	F 0 4 4	500#	P	S 0 1	T 0 3			
15	F 0 4 5	500#	P	S 0 1	T 0 3			
16	F 0 4 6	500#	P	S 0 1	T 0 3			
17	F 0 4 7	500#	P	S 0 1	T 0 3			
18	F 0 4 8	500#	P	S 0 1	T 0 3			
19	F 0 4 9	500#	P	S 0 1	T 0 3			
20	F 0 5 0	500#	P	S 0 1	T 0 3			
21	F 0 5 1	500#	P	S 0 1	T 0 3			
22	F 0 5 4	500#	P	S 0 1	T 0 1	T 0 4	T 0 3	
23	F 0 5 6	500#	P	S 0 1				
[illegible]	F 0 5 7	500#	P	S 0 1	T 0 3			
25	F 0 5 8	500#	P	S 0 1				
26	F 0 5 9	500#	P	S 0 1	T 0 3			

Continued from page 2.
NOTE: Photocopy this page before completing if you have more than 26 wastes to list.

Form Approved OMB No. 158-S80004

EPA I.D. NUMBER (enter from page 1)	FOR OFFICIAL USE ONLY
W N M 0 8 9 0 0 1 0 5 1 5	W DUP 2 DUP

DESCRIPTION OF HAZARDOUS WASTES (continued)

LINE NO.	A. EPA HAZARD. WASTE NO. (enter code)	B. ESTIMATED ANNUAL QUANTITY OF WASTE	C. UNIT OF MEASURE (enter code)	D. PROCESSES 1. PROCESS CODES (enter)	D. PROCESSES 2. PROCESS DESCRIPTION (if a code is not entered in D.1.)
1	P060	500#	P	S01 T03	
2	P062	500#	P	S01 T03	
3	P063	500#	P	S01 T03 T04	
4	P064	500#	P	S01 T03 T04	
5	P065	500#	P	S01 T04	
6	P066	500#	P	S01 T03	
7	P067	500#	P	S01 T03	
8	P068	500#	P	S01 T03	
9	P069	500#	P	S01 T03 T04	
10	P070	500#	P	S01 T03	
11	P071	500#	P	S01 T03 T04	
12	P072	500#	P	S01 T03	
13	P073	500#	P	S01 T01 T04	
14	P074	500#	P	S01 T01	
15	P075	500#	P	S01 T03	
16	P076	500#	P	S01 T01 T04	
17	P077	500#	P	S01 T03 T04	
18	P078	500#	P	S01 T01	
19	P081	500#	P	S01 T04	
20	P082	500#	P	S01 T03	
21	P084	500#	P	S01 T03	
22	P085	500#	P	S01 T03	
23	P087	500#	P	S01	
24	P088	500#	P	S01 T03	
25	P089	500#	P	S01 T03	
26	P092	500#	P	S01 T03	

Continued from page 2.
NOTE Photocopy this page before completing if you have more than 26 wastes to list.

Form Approved OMB No. 158-S80004

EPA I.D. NUMBER (enter from page 1)	FOR OFFICIAL USE ONLY	
NMD980105115	W DUP	2 DUP

DESCRIPTION OF HAZARDOUS WASTES (continued)

LINE NO.	A. EPA HAZARD. WASTE NO. (enter code)	B. ESTIMATED ANNUAL QUANTITY OF WASTE	C. UNIT OF MEASURE (enter code)	D. PROCESSES 1. PROCESS CODES (enter)				2. PROCESS DESCRIPTION (if a code is not entered in D.1.)
1	P093	500*	P	S01	T03			
2	P094	500*	P	S01	T03			
3	P095	500*	P	S01	T03			
4	P096	500*	P	S01	T03	T04		
5	P097	500*	P	S01	T03			
6	P098	500*	P	S01	T01			
7	P099	500*	P	S01	T01			
8	P101	500*	P	S01	T03			
9	P102	500*	P	S01	T03			
10	P103	500*	P	S01	T03			
11	P104	500*	P	S01	T01			
12	P105	500*	P	S01				
13	P106	500*	P	S01	T01			
14	P107	500*	P	S01	T04			
15	P108	500*	P	S01	T03			
16	P109	500*	P	S01	T03			
17	P110	500*	P	S01	T03			
18	P111	500*	P	S01	T03			
19	P112	500*	P	S01	T03	T04		
20	P113	500*	P	S01	T01			
21	P114	500*	P	S01	T01			
22	P115	500*	P	S01	T01			
23	P116	500*	P	S01	T03			
24	P118	500*	P	S01	T03			
25	P119	500*	P	S01				
26	P120	500*	P	S01				

EPA Form 3510-3 (6-80)

CONTINUE ON REVE

Continued from page 2.
NOTE: Photocopy this page before completing if you have more than 26 wastes to list.

Form Approved OMB No. 158-S80

EPA I.D. NUMBER (enter from page 1): W N M 0 8 9 0 0 1 0 5 1 5 — 1

FOR OFFICIAL USE ONLY: W — DUP — DUP

IV. DESCRIPTION OF HAZARDOUS WASTES (continued)

LINE NO.	A. EPA HAZARD. WASTE NO. (enter code)	B. ESTIMATED ANNUAL QUANTITY OF WASTE	C. UNIT OF MEASURE (enter code)	D. PROCESSES 1. PROCESS CODES (enter)				D. PROCESSES 2. PROCESS DESCRIPTION (if a code is not entered in D(1))
1	P121	1,000	P	S01	T01			
2	P122	1,000	P	S01	T04			
3	P123	1,000	P	S01	T03			
4		END OF P DESIGNATOR 1,000						
5								
6								
7								
8								
9								
10								
11								
12								
13								
14								
15								
16								
17								
18								
19								
20								
21								
22								
23								
24								
25								
26								

EPA Form 3510-3 (6-80)

CONTINUE ON

Continued from page 2.
NOTE Photocopy this page before completing if you have more than 26 wastes to list.

Form Approved OMB No. 158-S80004

EPA I.D. NUMBER (enter from page 1)	FOR OFFICIAL USE ONLY
W N M 0 8 9 0 0 1 0 5 1 5 1	W DUP 2 DUP

DESCRIPTION OF HAZARDOUS WASTES (continued)

LINE NO.	A. EPA HAZARD. WASTE NO. (enter code)	B. ESTIMATED ANNUAL QUANTITY OF WASTE	C. UNIT OF MEASURE (enter code)	D. PROCESSES 1. PROCESS CODES (enter)	D. PROCESSES 2. PROCESS DESCRIPTION (if a code is not entered in D.1.)
1	U001	500*	P	S01 T03	
2	U002	1000	P	S01 T03	
3	U003	500*	P	S01 T03	
4	U004	500*	P	S01 T03	
5	U005	500*	P	S01 T03	
6	U006	500*	P	S01 T04 T03	
7	U007	500*	P	S01 T03	
8	U008	500*	P	S01 T03 T04	
9	U009	500*	P	S01 T03	
10	U010	500*	P	S01 T03	
11	U011	500*	P	S01 T03	
12	U012	500*	P	S01 T03	
13	U014	500*	P	S01 T03	
14	U015	500*	P	S01 T03	
15	U016	500*	P	S01 T03	
16	U017	500*	P	S01 T03	
17	U018	500*	P	S01 T03	
18	U019	1000	P	S01 T03	
19	U020	500*	P	S01 T03 T04	
20	U021	500*	P	S01 T03	
21	U022	500*	P	S01 T03	
22	U023	500*	P	S01 T03 T04	
23	U024	500*	P	S01 T03	
24	U025	500*	P	S01 T03	
25	U026	500*	P	S01 T03	
26	U027	500*	P	S01 T03	

EPA Form 3510-3 (6-80)

CONTINUE ON R

(enter "A", "B", "C", etc. behind the "3" to identify photocopied pages)

Continued from page 2.
NOTE: Photocopy this page before completing if you have more than 26 wastes to list.

Form Approved OMB No. 158-S

EPA I.D. NUMBER (enter from page 1): W N M 0 8 9 0 0 1 0 5 1 5 1

FOR OFFICIAL USE ONLY: W DUP DUP

IV. DESCRIPTION OF HAZARDOUS WASTES (continued)

LINE NO.	A. EPA HAZARD. WASTE NO. (enter code)	B. ESTIMATED ANNUAL QUANTITY OF WASTE	C. UNIT OF MEASURE (enter code)	D. PROCESSES 1. PROCESS CODES (enter)				2. PROCESS DESCRIPTION (if a code is not entered in D.1)
1	U028	1,000	P	S01	T03			
2	U029	1,000	P	S01	T03			
3	U030	1,000	P	S01	T03			
4	U031	1,000	P	S01	T03			
5	U032	1,000	P	S01	T01			
6	U033	1,000	P	S01	T04			
7	U034	1,000	P	S01	T03			
8	U035	1,000	P	S01	T03			
9	U036	1,000	P	S01	T03			
10	U037	1,000	P	S01	T03			
11	U038	1,000	P	S01	T03			
12	U039	1,000	P	S01	T03			
13	U041	1,000	P	S01	T03			
14	U042	1,000	P	S01	T03	T04		
15	U043	1,000	P	S01	T03	T04		
16	U044	1000	P	S01	T03			
17	U045	1,000	P	S01	T03	T04		
18	U046	1,000	P	S01	T03			
19	U047	1,000	P	S01	T03			
20	U048	1,000	P	S01	T03			
21	U049	1,000	P	S01	T03			
22	U050	1,000	P	S01	T03			
23	U051	1,000	P	S01	T03			
24	U052	1,000	P	S01	T03			
25	U053	1,000	P	S01	T03			
26	U055	1,000	P	S01	T03			

Continued from page 2.
NOTE Photocopy this page before completing if you have more than 26 wastes to list.

Form Approved OMB No. 158-S80004

EPA I.D. NUMBER (enter from page 1)	FOR OFFICIAL USE ONLY
W N M D 8 9 0 0 1 0 5 1 5 1	W DUP 2 DUP

DESCRIPTION OF HAZARDOUS WASTES (continued)

LINE NO.	A. EPA HAZARD. WASTE NO. (enter code)	B. ESTIMATED ANNUAL QUANTITY OF WASTE	C. UNIT OF MEASURE (enter code)	D. PROCESSES 1. PROCESS CODES (enter)	2. PROCESS DESCRIPTION (if a code is not entered in D.1.)
1	U056	500#	P	S01 T03	
2	U057	500#	P	S01 T03	
3	U058	500#	P	S01 T03	
4	U059	500#	P	S01 T03	
5	U060	500#	P	S01 T03	
6	U061	500#	P	S01 T03	
7	U062	500#	P	S01 T03	
8	U063	500#	P	S01 T03	
9	U064	500#	P	S01 T03	
10	U066	500#	P	S01 T03	
11	U067	500#	P	S01 T03	
12	U068	500#	P	S01 T03	
13	U069	500#	P	S01 T03	
14	U070	500#	P	S01 T03	
15	U071	500#	P	S01 T03	
16	U072	500#	P	S01 T03	
17	U073	500#	P	S01 T03	
18	U074	500#	P	S01 T03	
19	U075	500#	P	S01	
20	U076	500#	P	S01 T03	
21	U077	500#	P	S01 T03	
22	U078	500#	P	S01 T03	
23	U079	500#	P	S01 T03	
	U080	1000	P	S01 T03	
25	U081	500#	P	S01 T03	
26	U082	500#	P	S01 T03	

EPA Form 3510-3 (6-80)

CONTINUE ON RE

Continued from page 2.
NOTE Photocopy this page before completing if you have more than 26 wastes to list.

Form Approved OMB No. 158-S80004

EPA I.D. NUMBER (enter from page 1)	FOR OFFICIAL USE ONLY
N M 0 8 9 0 0 1 0 5 1 5	W DUP DUP

DESCRIPTION OF HAZARDOUS WASTES (continued)

LINE NO.	A. EPA HAZARD. WASTE NO. (enter code)	B. ESTIMATED ANNUAL QUANTITY OF WASTE	C. UNIT OF MEASURE (enter code)	D. PROCESSES 1. PROCESS CODES (enter)		2. PROCESS DESCRIPTION (if a code is not entered in D.1.)
1	U 0 8 3	500*	P	S 0 1	T 0 3	
2	U 0 8 4	500*	P	S 0 1	T 0 3	
3	U 0 8 5	500*	P	S 0 1	T 0 3	
4	U 0 8 6	500*	P	S 0 1	T 0 3	
5	U 0 8 7	500*	P	S 0 1	T 0 3	
6	U 0 8 8	500*	P	S 0 1	T 0 3	
7	U 0 8 9	500*	P	S 0 1	T 0 3	
8	U 0 9 0	500*	P	S 0 1	T 0 3	
9	U 0 9 1	500*	P	S 0 1	T 0 3	
10	U 0 9 2	500*	P	S 0 1	T 0 4	T 0 3
11	U 0 9 3	500*	P	S 0 1	T 0 3	
12	U 0 9 4	500*	P	S 0 1	T 0 3	
13	U 0 9 5	500*	P	S 0 1	T 0 3	
14	U 0 9 6	500*	P	S 0 1	T 0 3	
15	U 0 9 7	500*	P	S 0 1	T 0 3	
16	U 0 9 8	500*	P	S 0 1	T 0 3	
17	U 0 9 9	500*	P	S 0 1	T 0 3	
18	U 1 0 1	500*	P	S 0 1	T 0 3	
19	U 1 0 2	500*	P	S 0 1	T 0 3	
20	U 1 0 3	500*	P	S 0 1	T 0 3	
21	U 1 0 5	500*	P	S 0 1	T 0 3	
22	U 1 0 6	500*	P	S 0 1	T 0 3	
23	U 1 0 7	500*	P	S 0 1	T 0 3	
24	U 1 0 8	500*	P	S 0 1	T 0 3	
25	U 1 0 9	500*	P	S 0 1	T 0 3	
26	U 1 1 0	500*	P	S 0 1	T 0 3	

Continued from page 2.
NOTE: Photocopy this page before completing if you have more than 26 wastes to list.

Form Approved OMB No. 158-S80004

EPA I.D. NUMBER (enter from page 1)	FOR OFFICIAL USE ONLY
W N M 0 8 9 0 0 1 0 5 1 5 — 1	W DUP — 2 DUP

IV. DESCRIPTION OF HAZARDOUS WASTES (continued)

LINE NO.	A. EPA HAZARD. WASTE NO. (enter code)	B. ESTIMATED ANNUAL QUANTITY OF WASTE	C. UNIT OF MEASURE (enter code)	D. PROCESSES 1. PROCESS CODES (enter)				D. PROCESSES 2. PROCESS DESCRIPTION (if a code is not entered in D(1))
1	U 1 1 1	500#	P	S 0 1	T 0 3			
2	U 1 1 2	500#	P	S 0 1	T 0 3	T 0 4		
3	U 1 1 3	500#	P	S 0 1	T 0 3	T 0 4		
4	U 1 1 4	500#	P	S 0 1	T 0 3			
5	U 1 1 5	500#	P	S 0 1	T 0 3	T 0 4		
6	U 1 1 6	500#	P	S 0 1	T 0 3			
7	U 1 1 7	500#	P	S 0 1	T 0 3	T 0 4		
8	U 1 1 8	500#	P	S 0 1	T 0 3	T 0 4		
9	U 1 1 9	500#	P	S 0 1	T 0 3			
10	U 1 2 0	500#	P	S 0 1	T 0 3			
11	U 1 2 1	500#	P	S 0 1				
12	U 1 2 2	1000	P	S 0 1	T 0 3			
13	U 1 2 3	500#	P	S 0 1	T 0 3			
14	U 1 2 4	500#	P	S 0 1	T 0 3			
15	U 1 2 5	500#	P	S 0 1	T 0 3			
16	U 1 2 6	500#	P	S 0 1	T 0 3			
17	U 1 2 7	500#	P	S 0 1	T 0 3			
18	U 1 2 8	500#	P	S 0 1	T 0 3			
19	U 1 2 9	500#	P	S 0 1	T 0 3			
20	U 1 3 0	500#	P	S 0 1	T 0 3			
21	U 1 3 1	500#	P	S 0 1	T 0 3			
22	U 1 3 2	500#	P	S 0 1	T 0 3			
23	U 1 3 3	500#	P	S 0 1	T 0 3	T 0 4		
24	U 1 3 4	10,000	P	S 0 1	T 0 1			
25	U 1 3 5	500#	P	S 0 1	T 0 4	T 0 3	T 0 1	
26	U 1 3 6	500#	P	S 0 1	T 0 3			

EPA Form 3510-3 (6-80)

CONTINUE ON REV

(enter "A", "B", "C", etc. behind the "3" to identify photocopied pages)

Continued from page 2.
NOTE: Photocopy this page before completing if you have more than 26 wastes to list.

Form Approved OMB No. 158-S80

EPA I.D. NUMBER (enter from page 1): W N M 0 8 9 0 0 1 0 5 1 5

FOR OFFICIAL USE ONLY: W DUP DUP

14. DESCRIPTION OF HAZARDOUS WASTES (continued)

LINE NO.	A. EPA HAZARD. WASTE NO. (enter code)	B. ESTIMATED ANNUAL QUANTITY OF WASTE	C. UNIT OF MEASURE (enter code)	D. PROCESSES 1. PROCESS CODES (enter)				2. PROCESS DESCRIPTION (if a code is not entered in D.1.)
1	U137	1,000	P	S01	T03			
2	U138	1,000	P	S01	T03			
3	U139	1,000	P	S01	T03			
4	U140	1,000	P	S01	T03			
5	U141	1,000	P	S01	T03			
6	U142	1,000	P	S01	T03			
7	U143	1,000	P	S01	T03			
8	U144	1,000	P	S01				
9	U145	1,000	P	S01				
10	U146	1,000	P	S01				
11	U147	1,000	P	S01	T03			
12	U148	1,000	P	S01	T03			
13	U149	1,000	P	S01	T03			
14	U150	1,000	P	S01	T03			
15	U151	1,000	P	S01				
16	U152	1,000	P	S01	T03			
17	U153	1,000	P	S01	T03			
18	U154	1,000	P	S01	T03			
19	U155	1,000	P	S01	T03			
20	U156	1,000	P	S01	T03			
21	U157	1000	P	S01	T03			
22	U158	1,000	P	S01	T03			
23	U159	1000	P	S01	T03			
24	U160	1,000	P	S01	T03	T04		
25	U161	1,000	P	S01	T03			
26	U162	1,000	P	S01	T03			

Continued from page 2.
NOTE Photocopy this page before completing if you have more than 26 wastes to list.

Form Approved OMB No. 158-S80004

EPA I.D. NUMBER (enter from page 1)	FOR OFFICIAL USE ONLY
W N M 0 8 9 0 0 1 0 5 1 5 1	W DUP 2 DUP

DESCRIPTION OF HAZARDOUS WASTES (continued)

LINE NO.	A. EPA HAZARD. WASTE NO. (enter code)	B. ESTIMATED ANNUAL QUANTITY OF WASTE	C. UNIT OF MEASURE (enter code)	D. PROCESSES 1. PROCESS CODES (enter)				2. PROCESS DESCRIPTION (if a code is not entered in D.1.)
1	U163	500*	P	S01	T03			
2	U164	500*	P	S01	T03			
3	U165	500*	P	S01	T03			
4	U166	500*	P	S01	T03			
5	U167	500*	P	S01	T03			
6	U168	500*	P	S01	T03			
7	U169	500*	P	S01	T03			
8	U170	500*	P	S01	T03			
9	U171	500*	P	S01	T03			
10	U172	500*	P	S01	T03			
11	U173	500*	P	S01	T03			
12	U174	500*	P	S01	T03			
13	U176	500*	P	S01	T03			
14	U177	500*	P	S01	T03			
15	U178	500*	P	S01	T03			
16	U179	500*	P	S01	T03			
17	U180	500*	P	S01	T03			
18	U181	500*	P	S01	T03			
19	U182	500*	P	S01	T03			
20	U183	500*	P	S01	T03			
21	U184	500*	P	S01	T03			
22	U185	500*	P	S01	T03			
23	U186	500*	P	S01	T03			
24	U187	500*	P	S01	T03			
25	U188	1000	P	S01	T03			
26	U189	500*	P	S01	T04	T03		

EPA Form 3510-3 (6-80)

CONTINUE ON RE

(enter "A" "B" "C" etc. behind the "3" to identify photocopied pages)

Continued from page 2.
NOTE Photocopy this page before completing if you have more than 26 wastes to list.

Form Approved OMB No. 158-S80004

EPA I.D. NUMBER (enter from page 1)	FOR OFFICIAL USE ONLY
W N M 0 8 9 0 0 1 0 5 1 5	W DUP 2 DUP

DESCRIPTION OF HAZARDOUS WASTES (continued)

LINE NO.	A. EPA HAZARD. WASTE NO. (enter code)	B. ESTIMATED ANNUAL QUANTITY OF WASTE	C. UNIT OF MEASURE (enter code)	D. PROCESSES 1. PROCESS CODES (enter)				2. PROCESS DESCRIPTION (if a code is not entered in D.1.)
1	U190	500#	P	S01	T03			
2	U191	500#	P	S01	T03			
3	U192	500#	P	S01	T03			
4	U193	500#	P	S01	T03			
5	U194	500#	P	S01	T03			
6	U196	500#	P	S01	T03			
7	U197	500#	P	S01	T03			
8	U200	500#	P	S01	T03			
9	U201	500#	P	S01	T03			
10	U202	500#	P	S01	T03			
11	U203	500#	P	S01	T03			
12	U204	500#	P	S01				
13	U205	500#	P	S01	T04			
14	U206	500#	P	S01	T03			
15	U207	500#	P	S01	T03			
16	U208	500#	P	S01	T03			
17	U209	500#	P	S01	T03			
18	U210	500#	P	S01	T03			
19	U211	1000	P	S01	T03			
20	U212	500#	P	S01	T03			
21	U213	500#	P	S01	T03	T04		
22	U214	500#	P	S01	T03			
23	U215	500#	P	S01				
24	U216	500#	P	S01				
25	U217	500#	P	S01	T04			
26	U218	500#	P	S01	T03			

Continued from page 2.
NOTE Photocopy this page before completing if you have more than 26 wastes to list.

Form Approved OMB No. 158-S80004

EPA I.D. NUMBER (enter from page 1)	FOR OFFICIAL USE ONLY
W N M 0 8 9 0 0 1 0 5 1 5	W DUP 2 DUP

V DESCRIPTION OF HAZARDOUS WASTES (continued)

LINE NO.	A. EPA HAZARD. WASTE NO. (enter code)	B. ESTIMATED ANNUAL QUANTITY OF WASTE	C. UNIT OF MEASURE (enter code)	D. PROCESSES 1. PROCESS CODES (enter)				D. PROCESSES 2. PROCESS DESCRIPTION (if a code is not entered in D.1.)
1	U219	500*	P	S01	T03			
2	U220	1000	P	S01	T03			
3	U221	500*	P	S01	T03			
4	U222	500*	P	S01	T03			
5	U223	1000	P	S01	T03			
6	U225	500*	P	S01				
7	U226	1500	P	S01	T03			
8	U227	500*	P	S01	T03			
9	U228	2000	P	S01	T03			
10	U230	500*	P	S01	T03			
11	U231	500*	P	S01	T03			
12	U232	500*	P	S01	T03			
13	U233	500*	P	S01	T03			
14	U234	500*	P	S01	T04	T03		
15	U235	500*	P	S01	T03			
16	U236	500*	P	S01	T03			
17	U237	500*	P	S01	T03			
18	U238	500*	P	S01	T03			
19	U239	1000	P	S01	T03			
20	U240	500*	P	S01	T03			
21	U242	500*	P	S01	T03			
22	U243	500*	P	S01	T03			
23	U244	500*	P	S01	T03			
24	U246	500*	P	S01				
25	U247	500*	P	S01	T03			
26	U248	500*	P	S01	T03			

Continued from page 2.
NOTE: Photocopy this page before completing if you have more than 26 wastes to list.

Form Approved OMB No. 158-S80004

EPA I.D. NUMBER (enter from page 1)	FOR OFFICIAL USE ONLY
W N M 0 8 9 0 0 1 0 5 1 5 — I/A: 1	W DUP — I/A: 2 DUP

IV. DESCRIPTION OF HAZARDOUS WASTES (continued)

LINE NO.	A. EPA HAZARD. WASTE NO. (enter code)	B. ESTIMATED ANNUAL QUANTITY OF WASTE	C. UNIT OF MEASURE (enter code)	D. PROCESSES 1. PROCESS CODES (enter)				D. PROCESSES 2. PROCESS DESCRIPTION (If a code is not entered in D(1))
1	U 2 4 9	500*	P	S 0 1				
2	U 3 2 6	500*	P	S 0 1	T 0 3			
3	U 3 5 3	500*	P	S 0 1	T 0 3			+
4	U 3 5 9	500*	P	S 0 1	T 0 3			
5								
6								
7								
8								
9								
10								
11								
12								
13								
14								
15								
16								
17								
18								
19								
20								
21								
22								
23								
24								
25								
26								

BATCH WASTE TREATMENT UNIT OPERATION

PERMIT ATTACHMENT H

NM0890010515-1

ATTACHMENT H

BATCH WASTE TREATMENT UNIT

OPERATIONS

INTRODUCTION

DESCRIPTION

HEALTH, SAFETY and ENVIRONMENTAL CONCERNS

PROCEDURES FOR SAFE OPERATIONS

- Cyanide Destruction
- Ammonia Destruction
- Chromate Reduction and Heavy Metal Removal
- General Safe Operating Procedures

RELATIONSHIPS BETWEEN OPERATIONS AND SUPPORT

TRAINING

EMERGENCY PROCEDURES

INTRODUCTION

The Batch Waste Treatment Unit (BWTU) is located at TA-50-1-24B (Figs 1 and 2). The process treats hazardous non-radioactive wastes and converts them to non-hazardous wastes. Two trained personnel are required to operate the BWTU.

DESCRIPTION

The waste is analyzed as received to determine the type of treatment required. The main component of the BWTU is a 500 gallon Kynar-lined, jacketed reactor. The reactor can be water heated or water cooled. Liquids and slurried solids may be charged from a feed tank or drum either directly into the bottom of the reactor or through a recycle loop. A cartridge/bag filter is used for removing suspended solids as part of the reactor system.

Gases from the reactor pass through a a double-pipe heat exchanger to condense any vapors present. The vapor line goes to the top of the building or to the hood in Room 24B which goes into exhaust system. The reactor is under a negative pressure when the vent line goes to the hood.

Four gas sensors monitor the BWTU area for the presence of H_2S, HCN, Cl_2 and NH_3 when appropriate.

HEALTH, SAFETY AND ENVIRONMENTAL CONCERNS

The Health, Safety and Environmental concerns are personnel exposure to hazardous chemicals and the potential release of toxic gases to the environment. The chemicals can be toxic, corrosive and/or reactive. No combustible chemicals are processed. Some of the primary treatment chemicals and their properties are listed here:

Calcium Hypochlorite: A powerful oxidant and a stable chlorine carrier.

Sodium Bisulfite: Irritating to skin and tissue. Reducing agent. TLV 5mg/M^3, IDLH 100 mg/M^3.

Sodium Hypochlorite: Strong oxidizing agent, strong irritant to tissue, disagreeable sweet odor. Toxic by ingestion.

Sodium Hydroxide: Corrosive to tissue. TLV 2 mg/M^3, IDLH 200 Mg/M^3 .

Sodium Bisulfide: Strong irritant to skin and tissue, liberates H_2S on contact with acids.

Nitric or Sulfuric Acid: Strong oxidizers. May react violently when in contact with organic chemicals. Very corrosive to skin and eyes.

PROCEDURES FOR SAFE OPERATION

Cyanide Destruction: Cyanide is destroyed by an oxidation process using calcium hypochlorite ($Ca(OCl)_2$), sodium hypochlorite (NaOCl) or similar oxidant. The cyanide contaminated material is charged to the reactor and the pH is adjusted as needed. As the oxidant is added both the pH and Oxidation-Reduction Potential(ORP) are monitored. Cyanide is oxidized to cyanate. Periodic addition of caustic is required during the processing to keep the pH above 8. Further oxidation converts the cyanate to carbon dioxide and nitrogen.

Ammonia Destruction: Ammonia wastes are destroyed by oxidation with hypochlorite or similar oxidant. Any solution which has been treated for cyanide will also have destroyed any ammonia present. Periodic addition of caustic is required during the processing to keep the pH above 8.

Chromate Reduction and Heavy Metal Removal: To remove chromate any Cr^{+6} present is first reduced to Cr^{+3} and the Cr^{+3} precipitated out of solution as chromic hydroxide [$Cr(OH)_3$]. If no other heavy metal ions are present the chromate is reduced with sodium bisulfite [$NaHSO_3$] and then precipitated with NaOH. If chromate is to be removed with other heavy metals, sodium bisulfide [NaHS] is added to the solution to first precipitate out all the heavy metals except chrome as their sulfide. More NaHS then reduces the chrome to +3. The chrome is then precipitated with NaOH.

General Safe Operating Procedures:

- Any time the reactor temperature exceeds 120°F, cooling water is turned on to the jacket until the temperature is less than 90°F.
- All instruments/gauges are checked and/or calibrated per Module IV sections D and E from the RCRA Part B draft permit.
- A safety shower, eye wash sink and a hose bib are located in the BWTU area.
- All valves, lines and connections are checked before and during operations for leaks.
- During operations the reactor is vented to the hood.
- The mixer is always turned on whenever chemicals are being added.
- Chemical charging lines are rinsed with water after each new chemical is added.
- The reactor and associated piping are rinsed with water after each batch.
- Two trained operators, at a minimum, are present during treatment.
- All personnel wear protective clothing and equipment whenever they are performing a chemical transfer. The gear consists of:

  A chemical resistant suit.
  Close-fitting safety goggles and face shield (with a optional hard hat)
  Chemical resistant gloves,
  Chemical resistant boots or chemical resistant coverings over shoes.

- Detailed operating instructions(OI's) are used for each specific operation.
- If another waste chemical not mentioned in this SOP is to be processed in the BWTU, a Special Work Permit (SWP) is prepared and approved for that chemical before processing.
- Waste is filtered after treatment to remove suspended solids. If more than twenty gallons of precipitate has been generated from the treatment of an individual batch, the entire treated solution will first be placed into drums. This allows the precipitate to settle. Filtering would then be performed on the supernate to preclude discharging any fine particulate that did not settle. The solids are solidified as necessary for disposal as either a hazardous or nonhazardous waste. The supernate will be collected or discharged to the TA-50 radioactive waste treatment system dependent upon the need for further analytical information as outlined in Permit Attachment A.

RELATIONSHIPS BETWEEN OPERATIONS AND SUPPORT

The BWTU is supported by the following groups: HSE-2 Occupational Medicine, HSE-3 Safety, HSE-5 Industrial Hygiene, HSE-7 Waste Management, HSE-8 Environmental Surveillance, and HSE-9 Analytical Chemistry. More detailed information of individual group responsibilities are located in Permit Attachments; A, B, C, D, E, and F.

TRAINING

All HSE-7 personnel involved with the BWTU will receive training consistent with those described in Permit Attachment C. Annual reviews of OI's, SOP's and procedures will be conducted.

EMERGENCY PROCEDURES

Emergency procedures for the BWTU are covered under Permit, Attachment D. In addition to this, site specific training will be given as specified in Attachment C of the RCRA Part B Permit.

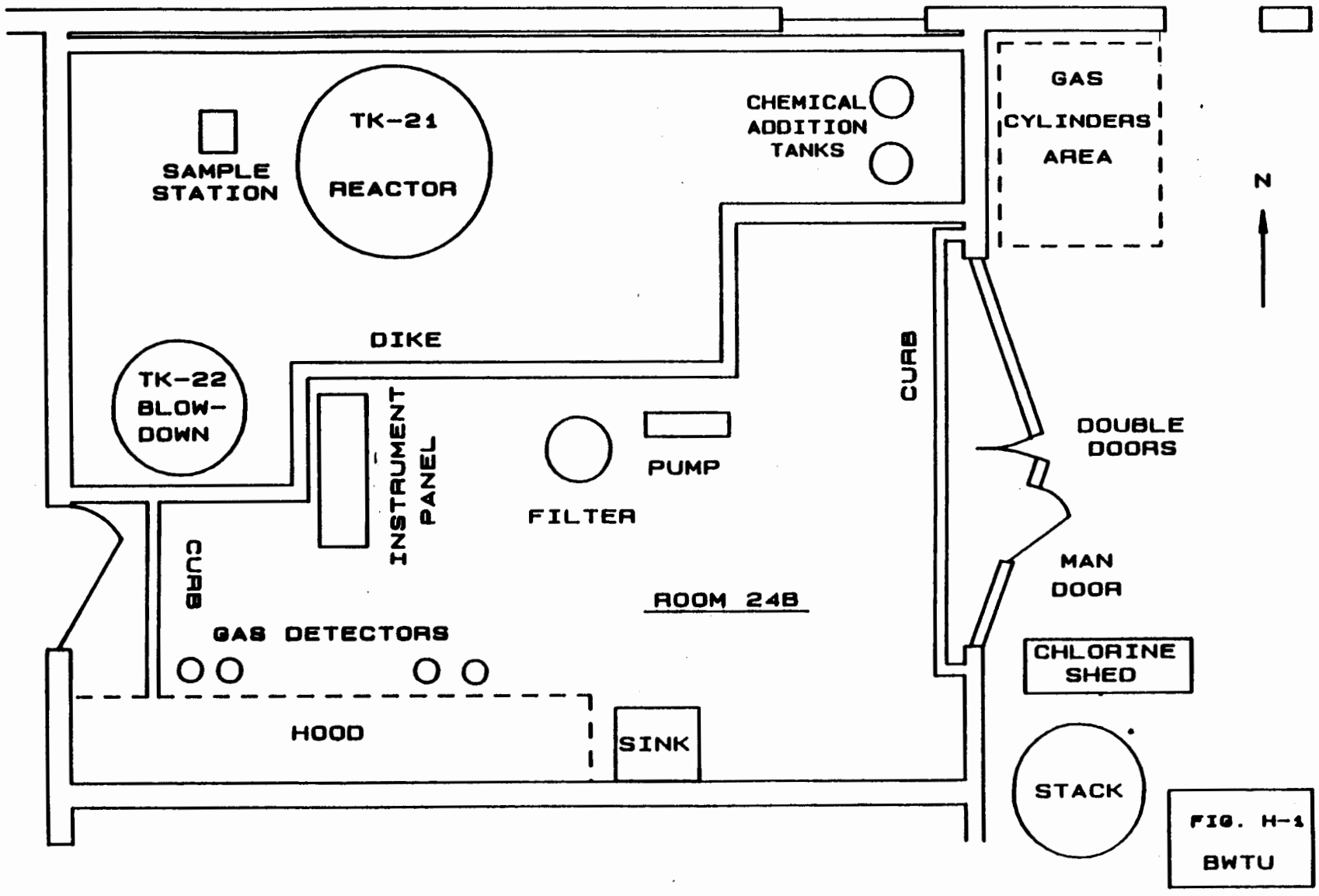
SAMPLE STATION
TK-21 REACTOR
CHEMICAL ADDITION TANKS
GAS CYLINDERS AREA
N
DIKE
TK-22 BLOW-DOWN
INSTRUMENT PANEL
FILTER
PUMP
CURB
DOUBLE DOORS
MAN DOOR
CURB
ROOM 24B
GAS DETECTORS
CHLORINE SHED
HOOD
SINK
STACK

FIG. H-1
BWTU

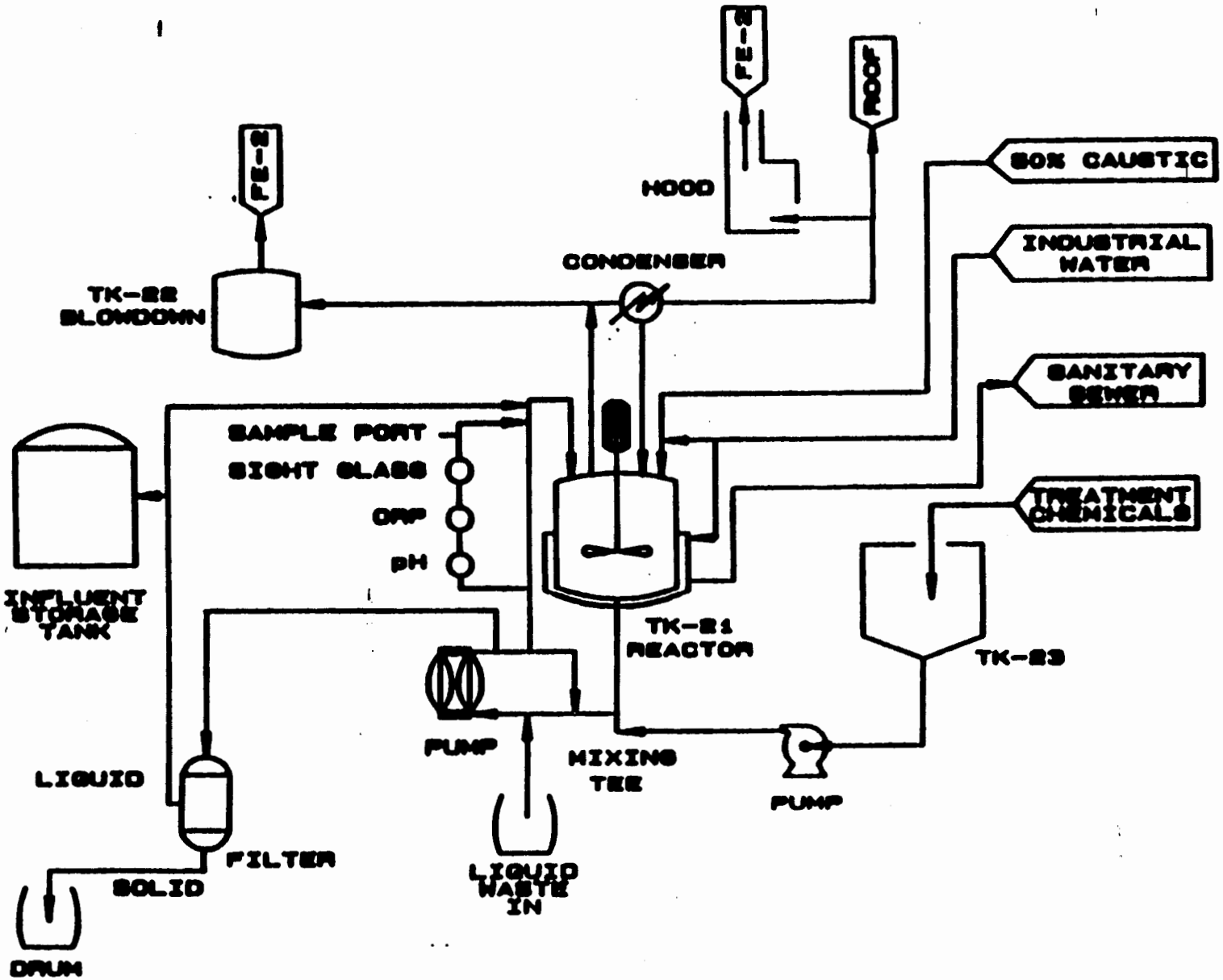

Figure H-2 BWTU Process Flow Sheet

ADDITIONAL DATA SUBMITTAL SCHEDULE
PERMIT ATTACHMENT I
NM0890010515-1

As used in this attachment, "investigate" means, within the restraints of personnel safety, to visually observe and trace from the point of origin or generation to the point of discharge, accumulation or treatment, a waste stream. Investigate further includes documentation of analyses accomplished to ascertain the chemical nature of the waste in accordance with HWMR-5, as amended 1989, Part III, 40 CFR section 262.11.

1. Within three months of the effective date of this permit, the Permittee shall :

   a. For each building and site in Technical Areas 0, 1, 2, and 4, investigate and compile a listing of every solid waste stream, as characterized in HWMR-5, Part II, 40 CFR section 261.2

   b. For each waste stream, determine, in accordance with HWMR-5, Part III, 40 CFR section 262.11, if each waste stream is a hazardous waste. Specific tests conducted in accordance with HWMR-5, Part III, 40 CFR section 262.11(c)(1), shall be identified and documented. All testing shall be by EPA-approved methods. Knowledge of process determinations made in accordance with HWMR-5, Part III, 40 CFR section 262.11(c)(2) shall be fully documented.

   c. The requested information shall be compiled by technical area and building or outside test site and submitted to the EID. Each source within the technical area shall be separately identified. Waste streams excluded in accordance with HWMR-5, Part III, 40 CFR section 262.11(a), shall be identified and fully documented as to the basis of the exclusion.

2. Within six months of the effective date of this permit, the Permittee shall :

   a. For each building and site in Technical Areas 5, 6, 7, and 8, investigate and compile a listing of every solid waste stream, as characterized in HWMR-5, Part II, 40 CFR section 261.2

   b. For each waste stream, determine, in accordance with HWMR-5, Part III, 40 CFR section 262.11, if each waste stream is a hazardous waste. Specific tests conducted in accordance with HWMR-5, Part III, 40 CFR section 262.11(c)(1), shall be identified and documented. All testing shall be by EPA-approved methods. Knowledge of process determinations made in accordance with HWMR-5, Part III, 40 CFR section 262.11(c)(2) shall be fully documented.

   c. The requested information shall be compiled by technical area and building or outside test site and submitted to the EID. Each source within the technical area shall be separately identified. Waste streams excluded in accordance with HWMR-5, Part III, 40 CFR section 262.11(a), shall be identified and fully documented as to the basis of the exclusion.

3. Within nine months of the effective date of this permit, the Permittee shall:

a. For each building and site in Technical Areas 3, 9, 10, and 11, investigate and compile a listing of every solid waste stream, as characterized in HWMR-5, Part II, 40 CFR section 261.2

b. For each waste stream, determine, in accordance with HWMR-5, Part III, 40 CFR section 262.11, if each waste stream is a hazardous waste. Specific tests conducted in accordance with HWMR-5, Part III, 40 CFR section 262.11(c)(1), shall be identified and documented. All testing shall be by EPA-approved methods. Knowledge of process determinations made in accordance with HWMR-5, Part III, 40 CFR section 262.11(c)(2) shall be fully documented.

c. The requested information shall be compiled by technical area and building or outside test site and submitted to the EID. Each source within the technical area shall be separately identified. Waste streams excluded in accordance with HWMR-5, Part III, 40 CFR section 262.11(a), shall be identified and fully documented as to the basis of the exclusion.

4. Within twelve months of the effective date of this permit, the Permittee shall :

a. For each building and site in Technical Areas 12, 13, 14, and 15, investigate and compile a listing of every solid waste stream, as characterized in HWMR-5, Part II, 40 CFR section 261.2

b. For each waste stream, determine, in accordance with HWMR-5, Part III, 40 CFR section 262.11, if each waste stream is a hazardous waste. Specific tests conducted in accordance with HWMR-5, Part III, 40 CFR section 262.11(c)(1), shall be identified and documented. All testing shall be by EPA-approved methods. Knowledge of process determinations made in accordance with HWMR-5, Part III, 40 CFR section 262.11(c)(2) shall be fully documented.

c. The requested information shall be compiled by technical area and building or outside test site and submitted to the EID. Each source within the technical area shall be separately identified. Waste streams excluded in accordance with HWMR-5, Part III, 40 CFR section 262.11(a), shall be identified and fully documented as to the basis of the exclusion.

5. Within fifteen months of the effective date of this permit, the Permittee shall:

a. For each building and site in Technical Areas 16, 18, 19, and 20, investigate and compile a listing of every solid waste stream, as characterized in HWMR-5, Part II, 40 CFR section 261.2

b. For each waste stream, determine, in accordance with HWMR-5, Part III, 40 CFR section 262.11, if each waste stream is a hazardous waste. Specific tests conducted in accordance with HWMR-5, Part III, 40 CFR section 262.11(c)(1), shall be identified and documented. All testing shall be by EPA-approved methods. Knowledge of process determinations made in accordance with HWMR-5, Part III, 40 CFR section 262.11(c)(2) shall be fully documented.

c. The requested information shall be compiled by technical area and building or outside test site and submitted to the EID. Each source within the technical area shall be separately identified. Waste streams excluded in accordance with HWMR-5, Part III, 40 CFR section 262.11(a), shall be identified and fully documented as to the basis of the exclusion.

6. Within eighteen months of the effective date of this permit, the Permittee shall:

   a. For each building and site in Technical Areas 21, 22, 26, and 28, investigate and compile a listing of every solid waste stream, as characterized in HWMR-5, Part II, 40 CFR section 261.2

   b. For each waste stream, determine, in accordance with HWMR-5, Part III, 40 CFR section 262.11, if each waste stream is a hazardous waste. Specific tests conducted in accordance with HWMR-5, Part III, 40 CFR section 262.11(c)(1), shall be identified and documented. All testing shall be by EPA-approved methods. Knowledge of process determinations made in accordance with HWMR-5, Part III, 40 CFR section 262.11(c)(2) shall be fully documented.

   c. The requested information shall be compiled by technical area and building or outside test site and submitted to the EID. Each source within the technical area shall be separately identified. Waste streams excluded in accordance with HWMR-5, Part III, 40 CFR section 262.11(a), shall be identified and fully documented as to the basis of the exclusion.

7. Within twentyone months of the effective date of this permit, the Permittee shall:

   a. For each building and site in Technical Areas 29, 30, 31, and 32, investigate and compile a listing of every solid waste stream, as characterized in HWMR-5, Part II, 40 CFR section 261.2

   b. For each waste stream, determine, in accordance with HWMR-5, Part III, 40 CFR section 262.11, if each waste stream is a hazardous waste. Specific tests conducted in accordance with HWMR-5, Part III, 40 CFR section 262.11(c)(1), shall be identified and documented. All testing shall be by EPA-approved methods. Knowledge of process determinations made in accordance with HWMR-5, Part III, 40 CFR section 262.11(c)(2) shall be fully documented.

   c. The requested information shall be compiled by technical area and building or outside test site and submitted to the EID. Each source within the technical area shall be separately identified. Waste streams excluded in accordance with HWMR-5, Part III, 40 CFR section 262.11(a), shall be identified and fully documented as to the basis of the exclusion.

8. Within twentyfour months of the effective date of this permit, the Permittee shall:

   a. For each building and site in Technical Areas 33, 35, 36, and 37, investigate and compile a listing of every solid waste stream, as characterized in HWMR-5, Part II, 40 CFR section 261.2

   b. For each waste stream, determine, in accordance with HWMR-5, Part III, 40 CFR section 262.11, if each waste stream is a hazardous waste. Specific tests conducted in accordance with HWMR-5, Part III, 40 CFR section 262.11(c)(1), shall be identified and documented. All testing shall be by EPA-approved methods. Knowledge of process determinations made in accordance with HWMR-5, Part III, 40 CFR section 262.11(c)(2) shall be fully documented.

c. The requested information shall be compiled by technical area and building or outside test site and submitted to the EID. Each source within the technical area shall be separately identified. Waste streams excluded in accordance with HWMR-5, Part III, 40 CFR section 262.11(a), shall be identified and fully documented as to the basis of the exclusion.

9. Within twentyseven months of the effective date of this permit, the Permittee shall submit to the EID:

   a. For each building and site in Technical Areas 39, 40, 41, and 43, investigate and compile a listing of every solid waste stream, as characterized in HWMR-5, Part II, 40 CFR section 261.2

   b. For each waste stream, determine, in accordance with HWMR-5, Part III, 40 CFR section 262.11, if each waste stream is a hazardous waste. Specific tests conducted in accordance with HWMR-5, Part III, 40 CFR section 262.11(c)(1), shall be identified and documented. All testing shall be by EPA-approved methods. Knowledge of process determinations made in accordance with HWMR-5, Part III, 40 CFR section 262.11(c)(2) shall be fully documented.

   c. The requested information shall be compiled by technical area and building or outside test site and submitted to the EID. Each source within the technical area shall be separately identified. Waste streams excluded in accordance with HWMR-5, Part III, 40 CFR section 262.11(a), shall be identified and fully documented as to the basis of the exclusion.

10. Within thirty months of the effective date of this permit, the Permittee shall:

   a. For each building and site in Technical Areas 44, 46, 47, and 48, investigate and compile a listing of every solid waste stream, as characterized in HWMR-5, Part II, 40 CFR section 261.2

   b. For each waste stream, determine, in accordance with HWMR-5, Part III, 40 CFR section 262.11, if each waste stream is a hazardous waste. Specific tests conducted in accordance with HWMR-5, Part III, 40 CFR section 262.11(c)(1), shall be identified and documented. All testing shall be by EPA-approved methods. Knowledge of process determinations made in accordance with HWMR-5, Part III, 40 CFR section 262.11(c)(2) shall be fully documented.

   c. The requested information shall be compiled by technical area and building or outside test site and submitted to the EID. Each source within the technical area shall be separately identified. Waste streams excluded in accordance with HWMR-5, Part III, 40 CFR section 262.11(a), shall be identified and fully documented as to the basis of the exclusion.

11. Within thirtythree months of the effective date of this permit, the Permittee shall submit to the EID:

   a. For each building and site in Technical Areas 49, 50, 51, and 52, investigate and compile a listing of every solid waste stream, as characterized in HWMR-5, Part II, 40 CFR section 261.2

   b. For each waste stream, determine, in accordance with HWMR-5, Part III, 40 CFR section 262.11, if each waste stream is a hazardous waste. Specific tests

conducted in accordance with HWMR-5, Part III, 40 CFR section 262.11(c)(1), shall be identified and documented. All testing shall be by EPA-approved methods. Knowledge of process determinations made in accordance with HWMR-5, Part III, 40 CFR section 262.11(c)(2) shall be fully documented.

c. The requested information shall be compiled by technical area and building or outside test site and submitted to the EID. Each source within the technical area shall be separately identified. Waste streams excluded in accordance with HWMR-5, Part III, 40 CFR section 262.11(a), shall be identified and fully documented as to the basis of the exclusion.

12. Within thirtysix months of the effective date of this permit, the Permittee shall:

a. For each building and site in Technical Areas 53, 54, 55, and 56, investigate and compile a listing of every solid waste stream, as characterized in HWMR-5, Part II, 40 CFR section 261.2

b. For each waste stream, determine, in accordance with HWMR-5, Part III, 40 CFR section 262.11, if each waste stream is a hazardous waste. Specific tests conducted in accordance with HWMR-5, Part III, 40 CFR section 262.11(c)(1), shall be identified and documented. All testing shall be by EPA-approved methods. Knowledge of process determinations made in accordance with HWMR-5, Part III, 40 CFR section 262.11(c)(2) shall be fully documented.

c. The requested information shall be compiled by technical area and building or outside test site and submitted to the EID. Each source within the technical area shall be separately identified. Waste streams excluded in accordance with HWMR-5, Part III, 40 CFR section 262.11(a), shall be identified and fully documented as to the basis of the exclusion.

13. Within thirtynine months of the effective date of this permit, the Permittee shall submit to the EID:

a. For each building and site in Technical Areas 57, 58, 59, and all other sites not identified above, investigate and compile a listing of every solid waste stream, as characterized in HWMR-5, Part II, 40 CFR section 261.2

b. For each waste stream, determine, in accordance with HWMR-5, Part III, 40 CFR section 262.11, if each waste stream is a hazardous waste. Specific tests conducted in accordance with HWMR-5, Part III, 40 CFR section 262.11(c)(1), shall be identified and documented. All testing shall be by EPA-approved methods. Knowledge of process determinations made in accordance with HWMR-5, Part III, 40 CFR section 262.11(c)(2) shall be fully documented.

c. The requested information shall be compiled by technical area and building or outside test site and submitted to the EID. Each source within the technical area shall be separately identified. Waste streams excluded in accordance with HWMR-5, Part III, 40 CFR section 262.11(a), shall be identified and fully documented as to the basis of the exclusion.

INCINERATOR OPERATIONAL SAFETY

PERMIT ATTACHMENT J

NM0890010515-1

ATTACHMENT J

INCINERATOR OPERATIONAL SAFETY

J.1 LIMITING CONDITIONS FOR PROCESS OPERATION

J.1.1 Objective

To ensure safety and protection of the environment, the CAI process operations will be conducted within the limits herein, and the following equipment, as appropriate to the activities, must be operating or available before process operations can be conducted.

J.1.2 Process Feed Operation

J.1.2.1 Plant Utilities

Electrical service (normal and auxiliary generator in 10-second standby mode); compressed air (designated and standby compressors); and building fire protection systems (the main water supply is integral to the supply for the wet- and dry-pipe fire sprinkler systems) must be available. Prior to operations in the liquid feed preparation area, the special HALON^{R} fire protection system must be available. The process area HEPA filtered ventilation system must be operating.

J.1.2.2 Plant Instrumentation

Prior to liquid waste operations, a survey of the ambient air in the Liquid Feed Preparation Room must be made, and instruments for measuring combustibles and oxygen concentrations must be at hand during preparation of volatile liquids.

J.1.2.3 Personnel

At least two persons must be on hand during any feed preparation operations.

J.1.3 Low-Temperature Check-Out Operations for the CAI

At low temperatures (below 500°F) the following are required:

J.1.3.1 Equipment

In addition to the minimum equipment requirements listed in J.1.2 above, low temperature operations for instrumentation and equipment checkout and calibration require the following:

J.1.3.2 Utilities

Liquid (diesel oil) and/or fuel gas (natural gas) supply systems; auxiliary cooling water system; uninterruptable power supply (UPS); and instrument air supply (designated and standby compressors).

J.1.3.3 Equipment in the CAI

Quench column pumps and sprays; incinerator induced draft (ID blower or automatic crossover to the HEPA filter plenum in building exhaust); process off-gas HEPA filter banks.

J.1.3.4 Instrumentation

All instrument and control panels must be on and operating. Prior approval of the Section Leader for Technical Support must be obtained to disable any safety interlock. If any interlocks are disabled, the front of the instrument chassis must be tagged and the interlock identified. An appropriate entry must be made in the Operations Log Book when any interlock is disabled or restored to operational condition.

J.1.3.5 Personnel

At least two persons must be present during operation of the incinerator. These are a shift supervisor and an additional process engineer.

J.1.4 High-Temperature Operations for the CAI

During incinerator startup for operation at temperatures above 500°F, and in addition to the items listed in J.1.3, the following must be fully functional:

J.1.4.1 Utilities

Auxiliary generator and automatic switchgear (running and ready); primary, secondary, and cooling tower loops and pumps; cooling tower blower(s) (depending on the outside and process scrub system temperatures); and the process steam generator with the pre-ignition interlock satisfied.

J.1.4.2 Equipment in the CAI

Venturi scrubber system; packed-column scrubber system; process liquid filter and recirculation system; off-gas superheater; and induced draft (ID) blower.

J.1.4.3 Instrumentation

All of the process controls and interlocks listed in the Second Edition of the Final Safety Analysis Report must be operable. No interlocks shall be disabled.

J.1.4.4 Personnel

Personnel requirements are the same as for low temperature operations.

J.1.5 Waste Feed Operations

In addition to the above, the following are required for waste feed operations:

J.1.5.1 Utilities

Waste feed will be terminated if the primary electrical supply system is lost. The loss of the primary water supply system initiates a controlled shutdown of the incinerator.

J.1.5.2 Equipment

During incinerator waste feed operations, all equipment specified in the previous sections must be fully operational. Waste feed operations shall cease until any discrepancies are corrected.

The NMEID permit for incineration of RCRA-listed and characteristic wastes specifies minimum operating temperatures, minimum percent oxygen in the secondary chamber, maximum carbon monoxide levels in the off-gas, maximum feed rates, and other parameters for hazardous waste feed operations. These parameters are detailed in Permit Module V for RCRA waste.

J.1.6 Process Off-gas Treatment

The following are required for off-gas treatment:

J.1.6.1 Equipment

Gas stream exit temperature from the quench column not greater than 350°F; gas stream exit temperature from the packed-column scrubber not greater than 180°F; gas stream inlet temperature to the process HEPA filters not greater than 250°F; scrubber solution temperature not greater than 180°F.

J.1.6.2 Personnel

In addition to the shift supervisor and process engineer, operations personnel shall be assigned to each shift as required to meet programmatic goals of the incinerator run plan.

J.1.7 Basis

Basis for limiting conditions for process operations is the 1979 AL/OSD Facility and Process Operational Safety Review and subsequent approval of the Operational Safety Requirements, the Technical Development Facility (TDF) Quality Assurance Manual (which includes requirements for reviews by the TDF experiment safety committee and design committee), and Administrative Requirement 1-8 of the Los Alamos Health and Safety Manual, Chapter 1.

J.2 DESIGN FEATURES

J.2.1 Construction

Except for the office addition, the TDF is constructed of precast, prestressed, pretensioned concrete double-"Tee" sections. The exterior walls are load bearing and are

interior insulated. All sections contain weldments to provide connection of the reinforcing steel between adjacent panels, floors, and roof decks. The interior load bearing walls are of filled concrete block construction. Non-load bearing walls are of metal stud and gypsumboard construction. The building shell is designed to remain as a confinement structure in all but a beyond design basis accident (BDBA).

Building design loads used were in accordance with ANSI Standard A58.1; 1972, and the Uniform Building Code for Earthquake Zone 2, 100 mph wind with a 100 year mean recurrance interval, Exposure B, and roof loads determined for 30 psf snow in addition to the ANSI Standard dead loads.

J.2.2 Fire Protection

The facility is designed for one hour Fire Code resistance with wet pipe sprinklers in all heated areas, except for the chemical storage area and the liquid feed preparation area. Antifreeze and dry pipe systems are installed in unheated areas to meet or exceed DOEM 0552 minimum requirements for "Improved Risk" level of protection.

The CAI process area exhaust duct to the facility main HEPA filter plenum contains a dry pipe water spray cooldown system upstream of the plenum. The plenum contains a mist eliminator/fire screen upstream of the filter banks. The main HEPA filter plenum has a dry pipe sprinkler system and the Bay 2 exhaust HEPA filter plenum contains an antifreeze sprinkler system. The chemical storage area contains a deluge fire sprinkler system and the liquid feed preparation area contains a HALON^{R} 1301 fire protection system.

J.2.3 Ventilation System

Three levels of containment with appropriate ventilation are provided. The four resulting zones are separated from each other by physical barriers and/or pressure gradients. All air exhausted from the process areas of the facility and the waste storage/staging bay is not less than double HEPA filtered before release from the facility stack. The ventilation supply and exhaust blowers are interlocked with the fire alarm system. A fire alarm initiates shutdown of these blowers to reduce the amount of oxygen available to a fire. Likewise, the liquid feed preparation area inlet air supply louvers and the ventilation exhaust blowers are interlocked with the fire alarm and the HALON^{R} system to isolate the room before the fire extinguishing medium is discharged.

J.2.4 Liquid Effluents

Except for the sanitary sewer system, all liquid effluents from the facility and the process are collected in sumps and are transferred through the double-contained and monitored radioactive waste line to the Industrial Waste Treatment Facility.

J.2.5 Utilities

The TDF has a diesel powered auxiliary generator and automatic switchgear which, when on standby mode, will supply electrical power to critical equipment, as well as communications and lighting to critical areas, within 10 seconds of a power failure. In

the running and ready mode used during all incinerator operations, the transfer time is less than one second. A battery powered Uninterruptable Power Supply (UPS) system provides power to the instrumentation and controls if the auxiliary generator and line power are both lost.

Designated and backup air compressors, powered from both the line and auxiliary sources, provide instrument air to the pneumatic process devices. These compressors are backed up by compressed gas (nitrogen) bottles.

J.2.6 Process

The CAI has a number of engineered safeguards:

J.2.6.1 Fire Protection Systems

In addition to the facility wet pipe, antifreeze filled, deluge, and dry pipe sprinkler systems, the process has several engineered fire protection systems:

The liquid feed preparation room has a HALON^R 1301 fire protection system, also initiated by UV detectors, temperature sensors, or manual pull station. The air supply louvers and exhaust blowers are interlocked with the alarm system to isolate the room prior to the HALON^R release.

The chemical storage area deluge sprinkler system is provided with a Fire Department connection for the addition of foam fire suppressant from a tanker truck.

The blowers supplying and exhausting air from the CAI process area and the waste storage/staging area are shut down upon the initiation of a fire alarm, to limit the oxygen available to a fire.

The floor drains in the CAI process and support areas and the sump in the radioactive waste storage area are connected to the facility sump tank in pit in Room 112. This tank discharges to the double contained and instrumented industrial waste water pipe line to the treatment plant at TA-50, Building 1. Fire water from the CAI process and support area sprinkler systems is collected by the floor drains. The radioactive waste storage area fire water is collected in a floor sump and is pumped to the facility sump tank. This floor sump is provided with an overflow drain to one of the chemical storage area sumps in the event that sprinkler flow in this room exceeds the pump capacity. Fire sprinkler water in Bay 2 and the main HEPA filter plenum system flows through floor drains and directly into the industrial waste line to the treatment plant.

There are no floor drains in the bermed liquid feed preparation area. The chemical storage area is provided with sumps of sufficient volume to contain the entire contents of the storage area containers and not less than thirty minutes of the deluge sprinkler system flow.

J.2.6.2 Liquid Blend/Feed System

Except for the transferring of liquids from the shipping containers to the waste feed tanks (which requires hands-on operations), liquid blend/feed station operations are performed from the control panel outside the liquid feed enclosure. Selected controls and

instrument readouts are also located at the incinerator main control panel and the liquid burner station at the incinerator.

J.2.6.3 Incinerator Controls and Interlocks

Incinerator startup and operation are automatically controlled and the systems are interlocked to prevent unsafe operation. Three shutdown modes (controlled, fast, and scram), with automatic and/or manual initiation, are provided to ensure safe shutdown of the process. Both visible and audible alarms are provided for fault indication.

J.2.6.3.1 Pre-Ignition Interlocks

Incinerator startup is prevented if faults are detected in the incinerator negative pressure, burner fuel supplies, and off-gas cleaning and cooling systems.

J.2.6.3.2 Startup Controls

A sequential timer controls air purge, pilot ignition, burner ignition, and flame failure shutdown.

J.2.6.3.3 Temperature Controllers

After startup, the incinerator is brought to temperature manually or automatically by a single station microprocessor-based controller. In the run mode, incinerator temperatures are maintained at set levels by temperature controllers.

J.2.6.3.4 Waste Feed Interruption and Cut-Off Interlocks

During operation, certain fault conditions require that liquid and solid waste feed be interrupted. In the case of solid waste feed, the loading cycle timer is disabled and the ram feeder is placed into standby mode. Liquid waste feed is instantaneously interrupted by closing of a solenoid shutoff valve on the liquid waste feed line.

J.2.6.3.5 Shutdown Controls

The detection of certain faults in the process equipment controls and interlocks will initiate one of three logic sequences (controlled, fast, or scram) provided to shut down the process in a safe and orderly manner, as dictated by the nature and potential consequences of the fault.

J.3 ADMINISTRATIVE CONTROLS

J.3.1 Responsibilities

Ultimate safety of the TDF operations lies with the HSE Division Leader, who appoints personnel to be responsible for the daily operation of the facility. These responsibilities include oversight of all engineering functions associated with maintenance and modifications of the building and with operating, maintaining, and modifying the CAI process.

J.3.2 Training

Training requirements for personnel assigned to the incinerator operations are delineated in Permit Attachment C.

J.3.3 Other Controls

The Technical Support Section maintains an emergency plan that is reviewed annually and updated as changes occur. Each employee assigned to the TDF has a copy of the emergency plan.

J.3.4 Internal Safety Review System

HSE-7 maintains a safety committee and appoints a safety officer to oversee safety functions of the group. The safety committee performs routine safety inspections of all HSE-7 facilities. A representative of HSE-3, Industrial Safety, is an ad hoc member.

J.3.5 Documentation of Operating Procedures

J.3.5.1 Operating Manual

An Operating Manual for the CAI process is maintained at the TDF. This manual is reviewed and updated as required. Each person assigned to TDF operations receives a copy of the manual. Manual contents are as follows:

1. Technical Support Section Organization
2. Operational Safety Requirements (OSRs)
3. Standard Operating Procedures (SOPs)
4. The TDF Emergency Plan
5. Facility Description
6. Facility Operating Instructions (OIs)
7. Process Description
8. Process Operating Instructions (OIs)
9. Utility Operating Instructions (OIs)

J.3.5.2 Standard Operating Procedures

Standard Operating Procedures (SOPs) are in effect for operations in the TDF, as specified in Administrative Requirement 1-3 of the Los Alamos Health and Safety Manual. The Technical Support Section reviews all SOPs at least annually and submits updates and revisions to the HSE Division SOP Committee for review and approval.

J.3.5.3 Special Work Permits

A Special Work Permit (SWP) must be obtained prior to conducting potentially hazardous activities not covered by an SOP. The building manager reviews and approves SWPs. The appropriate disciplines in Facility Engineering (ENG-5), Radiation Safety (HSE-1), Industrial Safety (HSE-3), and Industrial Hygiene (HSE-5) also review the SWPs.

J.3.5.4 Operating Instructions

Operating Instructions (OIs) are the detailed process equipment operating procedures and check lists required to safely start, operate, and shut down the CAI process, utilities, and other mechanical equipment. Members of the section's engineering staff write the OIs, which are then submitted for peer review within the section. The OIs are revised as operational requirements dictate.

NEW MEXICO

HAZARDOUS WASTE MANAGEMENT REGULATIONS
HWMR-5

PERMIT ATTACHMENT K

NM0890010515-1

ENVIRONMENTAL IMPROVEMENT BOARD
1190 ST. FRANCIS DRIVE
SANTA FE, NEW MEXICO 87503

EIB/HWMR-5
Amended July 9, 1989

HAZARDOUS WASTE MANAGEMENT REGULATIONS

PART I - HAZARDOUS WASTE MANAGEMENT SYSTEM - GENERAL

101. Adoption of 40 CFR Part 260. Except as otherwise provided, the regulations of the United States Environmental Protection Agency set forth in 40 CFR Part 260, through July 1, 1988, are hereby incorporated as Part I of the New Mexico Hazardous Waste Management Regulations.

102. Modifications and Exceptions. The following modifications and exceptions are made to the incorporated federal regulations:

A. The following terms defined in 40 CFR §260.10 have the meanings set forth herein, in lieu of the meanings set forth in 40 CFR §260.10:

1. "Administrator" or "Regional Administrator" means the Director of the Environmental Improvement Division of the New Mexico Health and Environment Department, or his designee.

B. The following terms not defined in 40 CFR §260.10 have the meanings set forth herein:

1. "Act" or "RCRA" ("Resource Conservation Recovery Act" as amended) means the Hazardous Waste Act, §§74-4-1 through 74-4-13 NMSA 1978;

2. "Application" means the Division forms for applying for permits including any additions, revisions, or modifications to the forms, and any other information required by the Director pursuant to these regulations;

3. "Appropriate act or regulation" means the Hazardous Waste Act or the New Mexico Hazardous Waste Management Regulations, HWMR-5;

4. "Board" means the Environmental Improvement Board;

5. "CFR" means the Code of Federal Regulations;

6. "Division" means the Environmental Improvement Division of the New Mexico Health and Environment Department;

7. "Environmental Protection Agency" or "EPA" shall be construed to mean the Environmental Improvement Division of the Health and Environment Department except when used in the phrase "EPA hazardous waste number" and in the definition of that phrase set forth in 40 CFR §260.10;

8. "Freedom of Information Act" or "FOIA" means the New Mexico act governing inspection of public records, §§14-2-1 through 14-2-3,14-3A-1 through14-3A-2, and 74-4-4.3.C. NMSA 1978;

9. "Hazardous substance incident" means any emergency incident involving a chemical or chemicals, including but not limited to transportation wrecks, accidental spills or leaks, fires, or explosions, which incident creates the reasonable probability of injury to human health or property; and

10. "Subtitle C of RCRA" means the New Mexico Hazardous Waste Act, §§74-4-1 to 74-4-13 NMSA 1978.

C. The following provisions of 40 CFR Part 260 are omitted from Part I of these regulations:

   1. The Editorial Note immediately preceeding Subpart A:

   2. §260.1(b)(6);

   3. §260.22;

   4. §260.30;

   5. §260.31;

   6. §260.32; and

   7. §260.33.

D. Whenever there is any requirement in any of the federal regulations incorporated into these regulations to report an emergency situation, the requirement shall be construed to mean that the party required to report shall report the incident to the Division via the New Mexico 24-hour emergency response number, (505) 827-9329.

E. References to 40 CFR Part 124 within the text of HWMR-5 as adopted shall be construed to mean Section 902 of HWMR-5.

PART II - IDENTIFICATION AND LISTING OF HAZARDOUS WASTE

201. Adoption of 40 CFR Part 261. The regulations of the United States Environmental Protection Agency set forth in 40 CFR Part 261, through July 1, 1988, are hereby incorporated as Part II of the New Mexico Hazardous Waste Management Regulations.

PART III - STANDARDS APPLICABLE TO GENERATORS OF HAZARDOUS WASTE

301. Adoption of 40 CFR Part 262. The regulations of the United States Environmental Protection Agency set forth in 40 CFR Part 262, through July 1, 1988, are hereby incorporated as Part III of the New Mexico Hazardous Waste Regulations.

PART IV - STANDARDS APPLICABLE TO TRANSPORTERS OF HAZARDOUS WASTE

401. Adoption of 40 CFR Part 263. Except as otherwise provided, the regulations of the United States Environmental Protection Agency set forth in 40 CFR Part 263, through July 1, 1988, are hereby incorporated as Part IV of the New Mexico Hazardous Waste Management Regulations.

402. Omissions. The following provisions of 40 CFR Part 263 are omitted from Part III of these regulations:

A. §263.20 (e).

403. Financial Assessments. The following provisions regarding financial assessments are applicable to hazardous substance incidents, in addition to the provisions of 40 CFR Part 263, Subpart C:

A. Any regulated person having possession, custody or control of a hazardous substance involved in a hazardous substance incident shall use his best efforts to effectuate a prompt and thorough cleanup, to levels required under applicable standards adopted under the laws of New Mexico. Nothing in the remainder of this section shall be read as authorizing or requiring a delay in clean-up.

B. In order to achieve the most prompt and thorough cleanup, the Division may assess charges against all regulated persons who contribute to the occurrence of a hazardous substance incident or who had possession, custody or control of the substance at the time such incident occurred.

C. The foregoing assessment shall be allocated among the regulated persons who are subject to the assessment on a basis deemed by the Division to be equitable under the circumstances. Assessments under this section shall be imposed only to expedite cleanup, and not to assign responsibility or to punish.

D. Failure of any assessed person to pay the assessment within 30 days of receipt shall subject said person to suspension or revocation of their hazardous waste permit, if they hold one, and subject them to possible fines and/or penalties.

E. Neither the fact that an assessment has been imposed, nor the size of the assessment, reflects any official view of responsibility for the incident for use in any civil or criminal proceeding. The fact that an assessment has been paid in compliance with these regulations does not constitute an admission of responsibility for the purposes of any civil or criminal proceeding.

PART V - STANDARDS FOR OWNERS AND OPERATORS OF HAZARDOUS WASTE TREATMENT STORAGE, AND DISPOSAL FACILITIES

501. Adoption of 40 CFR Part 264. Except as otherwise provided, the regulations of the United States Environmental Protection Agency set forth in 40 CFR Part 264, through July 1, 1988 are hereby incorporated as Part V of the New Mexico Hazardous Waste Management Regulations.

502. Omissions. The following provisions of 40 CFR Part 264 are omitted from Part V of these regulations:

A. §264.149; and

B. §264.150.

PART VI - INTERIM STATUS STANDARDS FOR OWNERS AND OPERATORS OF HAZARDOUS WASTE TREATMENT STORAGE, AND DISPOSAL FACILITIES

601. Adoption of 40 CFR Part 265. Except as otherwise provided, the regulations of the United States Environmental Protection Agency set forth in 40 CFR Part 265, through July 1, 1988, are hereby incorporated as Part VI of the New Mexico Hazardous Waste Management Regulations.

602. Omissions. The following provision of 40 CFR Part 265 are omitted from Part VI of these regulations:

A. §265.149; and

B. §265.150.

PART VII - STANDARDS FOR THE MANAGEMENT OF SPECIFIC HAZARDOUS WASTES AND SPECIFIC TYPES OF HAZARDOUS WASTE MANAGEMENT FACILITIES

701. Adoption of 40 CFR Part 266. The regulations of the United States Environmental Protection Agency set forth in 40 CFR Part 266, through July 1, 1988, are hereby incorporated as Part VII of the New Mexico Hazardous Waste Management Regulations.

PART VIII - LAND DISPOSAL RESTRICTIONS

801. Adoption of 40 CFR Part 268. The regulations of the United States Environmental Protection Agency set forth in 40 CFR Part 268 through July 1, 1988, are hereby incorporated as Part VIII of the New Mexico Hazardous Waste Management Regulations.

PART IX - THE HAZARDOUS WASTE PERMIT PROGRAM

901. Adoption of 40 CFR PART 270. The regulations of the United States Environmental Protection Agency set forth 40 CFR Part 270, through July 1, 1988, are hereby incorporated in Part IX of the New Mexico Hazardous Waste Management Regulations.

902. Permitting Procedures.

A. Permit Issuance.

1. Once an application is complete, the Director shall tentatively decide whether to prepare a draft permit or to deny the application.

2. If the Director decides to prepare a draft permit, he shall prepare a draft permit that contains all conditions, compliance schedules, monitoring requirements and technical standards for treatment, storage, and/or disposal provided for in Part 270 of these regulations.

3. All draft permits for facilities or activities prepared by the Division under 902.A.2. shall be accompanied by a fact sheet and shall be based on the administrative file. Copies of the fact sheet shall be sent to the applicant, any state or federal agency as applicable and, on request, to any other person.

4. The Director shall give public notice that a draft permit has been prepared or that a permit application has been tentatively denied and shall allow at least forty-five (45) days for public comment and review. During this comment period, whenever a written notice of opposition to a draft permit and a request for a hearing is received from an affected individual, a public hearing may be held. The Division, acting in conjunction with the applicant, will respond to these requests in an attempt to resolve those issues giving rise to such opposition. If such issues can be resolved to the satisfaction of the opponent, the affected individual may waive his request for a public hearing. In such case the public hearing need not be held. The Director may also hold a public hearing at his discretion.

5. No ruling shall be made on permit issuance without an opportunity for all interested persons to be given a reasonable chance to submit significant data, views or arguments orally or in writing and to examine witnesses testifying at any public hearing. The comment period specified in 902.A.4. shall automatically be extended to the close of any public hearing.

6. The Director shall give due consideration and the weight he deems appropriate to all comments received during a public comment period and to all relevant facts and circumstances presented at any public hearing.

7. When ruling on permit issuance, the Division may disapprove in whole or in part, or make reasonable conditions to any permit, if it appears that the proposed action will not meet the requirements of these regulations.

8. At the time that any final permit decision is issued, the Director shall issue a response to comments. This response shall:

   a. Specify which provisions, if any, of the draft permit have been changed in the final permit decision, and the reasons for the change; and

   b. Briefly describe and respond to all significant comments on the draft permit or the permit application raised during the public comment period, or during any hearing.

9. The response to comments shall be available to the public.

10. The approval of a permit does not relieve any person from the responsibility of complying with applicable state or federal laws and regulations.

11. The Director shall notify the permittee by certified mail of any impending permit action and of any scheduled public hearing date.

B. Permit Modification, Suspension and Revocation.

1. The Director may modify, suspend, or revoke a permit issued pursuant to 902.B. for cause set forth in Part 270 of these regulations.

2. The Director may modify, suspend, revoke or terminate a permit upon his initiative, or if, after the Division's investigation of the facts and circumstances, pursuant to the request of any interested person, such permit action is deemed warranted.

3. All requests for permit modification, suspension, revocation or termination shall be in writing and shall contain facts or reasons supporting the request.

4. In a permit modification under this section, only those conditions to be modified shall be considered when a new draft permit is prepared. All other aspects of the existing permit shall remain in effect for the duration of the unmodified permit.

5. Minor modifications as outlined in Part 270 of these regulations are not subject to the requirements in 902.B. for permit modifications.

6. The Director shall notify the permittee by certified mail of any impending permit action and of any scheduled public hearing date and issue public notice of impending permit action.

7. No ruling shall be made on permit modification, suspension or revocation without an opportunity for a public hearing at which all interested persons shall be given a reasonable chance to submit significant data, views or argument orally or in writing and to examine witnesses testifying at the hearing.

8. The Director shall give due consideration and the weight he deems appropriate to all comments received during a public comment period and to all relevant facts and circumstances presented at any public hearing.

C. Public Notices.

1. Public notice of permit actions (preparation of a draft permit, tentative denial of a permit application, scheduling of a public hearing) shall be given by publication of a notice in a newspaper of general circulation in the area affected, broadcasts over local radio stations and by mailing a copy of the notice to the permit applicant, those individuals on the Hazardous Waste Unit's mailing list, and to any units of local, state and federal government as may be applicable.

2. All public notices issued shall contain the following minimum information:

   a. The subject, the time and place of any scheduled hearing and the manner in which interested persons may present their views;

   b. A brief description of the procedures by which requests for hearings may be made, unless already scheduled;

   c. Name and address of the office processing the permit action for which notice is being given;

   d. Name and address of the permittee or permit applicant, and, if different, of the facility or activity regulated by the permit;

   e. A brief description of the business conducted at the facility or activity described in the permit application or the draft permit; and

f. Name, address and telephone number of a person from whom interested persons may obtain further information;

g. In addition, public notice of a scheduled public hearing shall also contain references to the date of previous public notices relating to the permit.

D. Fact Sheet.

1. A fact sheet shall be prepared for every draft permit for a Hazardous Waste Management facility or activity. The fact sheet shall briefly set forth the principal facts and the significant factual legal, methodological and policy questions considered in preparing the draft permit.

2. The fact sheet shall include, when applicable:

a. A brief description of the type of facility or activity which is the subject of the draft permit;

b. The type and quantity of wastes which are proposed to be or are being treated, stored, disposed of, injected, emitted, or discharged.

c. A brief summary of the basis for the draft permit conditions including references to applicable statutory or regulatory provisions.

d. Reasons why any requested variance or alternative to require standards do or do not appear justified.

e. A description of the procedures for reaching a final decision on the draft permit including:

(1) The beginning and ending dates of the comment period and the address where comments will be received;

(2) Procedures for requesting a hearing and the nature of that hearing; and

(3) Any other procedures by which the public may participate in the final decision.

f. Name and telephone number of a person to contact for additional information.

3. The fact sheet shall be available at the time the public notice is published.

E. Hearings.

1. Public notice of any public hearing shall be given at least thirty (30) days prior to the scheduled date of the hearing.

2. Hearings shall be held in Santa Fe or within any area of the state substantially affected by the proceedings as specified by the Director.

3. The Director may designate a hearing officer to take evidence at the hearing.

4. All hearings shall be recorded by a certified court reporter. A transcript will be furnished to all persons for review at the Division's main office. Costs of a copy of a transcript will be borne by those requesting such copies.

5. In hearings, the rules of civil procedures and the technical rules of evidence shall not apply, but the hearings shall be conducted so that all relevant views, arguments, and testimony are amply and fairly received without undue repetition.

6. Any person heard or represented at the hearing shall be given written notice of the action of the Director.

7. The Director shall notify the applicant or permittee of his decision and the reasons, therefore, by certified mail.

F. Director's Decision.

For purposes of these regulations, the Director's decision is not made until it becomes final under Section 902.G. or until the Board renders its decision under 902.F. either sustaining or reversing the Director. Immediately upon receiving the Board's decision the Director shall enter the Director's decision in accord with the Board's decision, which shall be considered the Director's decision for purposes of appeal to the Court of Appeals.

G. Review and Hearings Before Board.

1. Any person adversely affected by the decision of the Director concerning the issuance, suspension, modification or revocation of a permit may submit a petition for review of the Director's decision by the Environmental Improvement Board. For purposes of this regulation, an applicant for permit, permittee or an alleged violator of a permit or regulation shall be the "appellant". A petition for review must be made in writing to the Board within thirty (30) days after notice of the Director's action or decision has been received by the appellant and must include a statement of issues and supporting

arguments. Unless a timely request for review and hearing is made, the decision of the Director shall be final.

2. Any new evidence becoming available after the tentative decision by, or the hearing before the Director, may be presented at a hearing before the Board if such hearing is requested along with the request for review of the Director's decision. Otherwise, the Board shall consider only the evidence admitted in the record formed at the hearing before the Director or the evidence available to the Director at the time of his or her tentative decision. All parties who participated in the hearing before the Director may submit to the Board, within thirty days of the appellant's request for review, proposed findings and reasons based upon the hearing record.

   In reviewing the Director's decision, the Board may modify or reverse the Director's decision if the decision is found to be:

   (a) arbitrary, capricious or an abuse of discretion;

   (b) not supported by substantial evidence; or,

   (c) otherwise not in accordance with law.

   If the appellant requests only that the Board review the Director's decision without requesting a hearing to consider new evidence, the Board shall render a decision denying, modifying or sustaining the Director's decision, along with findings and reasons, within sixty (60) days of the appellant's request, and by certified mail shall notify the appellant and shall make a reasonable effort to notify all participants in the hearing before the Director of its decision, findings and reasons. If a hearing to consider new evidence is held, the Board's decision on the Director's decision shall be defered until the hearing is held in accordance with the sub-sections 3 through 6.

3. If a timely request for hearing is made, the Board shall hold a hearing within sixty (60) days after receipt of the request, and at least twenty (20) days prior to the hearing date shall notify the appellant by certified mail and shall make a reasonable effort to notify all who submitted comments on the permit, or who participated in the hearing before the Director of the date, time and place of the hearing. The Board shall also publish notice of the date, time and place of hearing at least twenty (20) days prior to the hearing date in a newspaper of general circulation in the county in which the facility is proposed to be located or is located and a newspaper of general circulation in the state.

4. The Division will arrange for transcript of the hearing by a certified reporter. Copies of the transcript shall be paid for by those requesting them.

5. Hearings shall be before the Board or a hearing officer appointed by the Board. If a hearing officer is designated by the Board he or she shall conduct the hearing and rule on the evidence presented. In hearings, the technical rules of evidence and the rules of civil procedure shall not apply, but the hearings shall be conducted so that all relevant views are amply and fairly presented without undue repetition. The Board may require reasonable substantiation of statements or records tendered and may require any view to be stated in writing when the circumstances justify.

6. The Board shall allow all parties a reasonable opportunity at a hearing to submit written and oral evidence and arguments, to introduce exhibits, and to cross-examine persons who testify. At any hearing accompanying the review of the Director's decision, in which only new evidence becoming available following the hearing before the Director is allowed, all exhibits, evidence and cross-examination shall be restricted to such new evidence.

7. All parties participating in the hearing may submit proposed findings and reasons to the Board within thirty (30) days following the Board's receipt of the transcript.

8. The Board may adopt findings submitted or may make separate findings, but the Board shall:

   (a) consider and weigh all of the evidence presented in making or adopting any and all of its findings and reasons;

   (b) adopt or make only findings and reasons that are supported by substantial evidence as presented; and,

   (c) not adopt or make any findings and reasons which are arbitrary or capricious, or otherwise not in accordance with the law.

9. Within sixty (60) days following the Board's receipt of the transcript, the Board shall render a decision on the basis of the hearing record sustaining, modifying or reversing the Director, along with findings, and shall notify the appellant and all participants in the hearing of its decision and findings.

PART X - MISCELLANEOUS

1001. Compliance with Other Regulations. Compliance with the Hazardous Waste Management Regulations does not relieve a person of the obligation to comply with other applicable state and federal regulations. If the United States Environmental Protection Agency should suspend any federal hazardous waste regulation having a direct counterpart in these regulations, the counterpart in these regulations shall be deemed suspended without any further action being taken.

1002. Construction. The Hazardous Waste Management Regulations shall be liberally construed to effectuate the purpose of the Act.

1003. Severability. If any Part or application of the Hazardous Waste Management Regulations is held invalid, the remainder, or its application to other situations or persons, shall not be affected.

1004. Supercession of Prior Regulations. These regulations supercede the Hazardous Waste Management Regulations, EIB/HWMR-4, filed December 16, 1987.

226, radium-228, and gross alpha particle radioactivity:

(a) Combined radium-226 and radium-228—5 pCi/l;

(b) Gross alpha particle activity (including radium-226 but excluding radon and uranium)—15 pCi/l.

APPENDIX II

A. Processes to Significantly Reduce Pathogens

Aerobic digestion: The process is conducted by agitating sludge with air or oxygen to maintain aerobic conditions at residence times ranging from 60 days at 15° C to 40 days at 20° C, with a volatile solids reduction of at least 38 percent.

Air Drying: Liquid sludge is allowed to drain and/or dry on under-drained sand beds, or paved or unpaved basins in which the sludge is at a depth of nine inches. A minimum of three months is needed, two months of which temperatures average on a daily basis above 0° C.

Anaerobic digestion: The process is conducted in the absence of air at residence times ranging from 60 days at 20° C to 15 days at 35° to 55° C, with a volatile solids reduction of at least 38 percent.

Composting: Using the within-vessel, static aerated pile or windrow composting methods, the solid waste is maintained at minimum operating conditions of 40° C for 5 days. For four hours during this period the temperature exceeds 55° C.

Lime Stabilization: Sufficient lime is added to produce a pH of 12 after 2 hours of contact.

Other methods: Other methods or operating conditions may be acceptable if pathogens and vector attraction of the waste (volatile solids) are reduced to an extent equivalent to the reduction achieved by any of the above methods.

B. Processes to Further Reduce Pathogens

Composting: Using the within-vessel composting method, the solid waste is maintained at operating conditions of 55° C or greater for three days. Using the static aerated pile composting method, the solid waste is maintained at operating conditions of 55° C or greater for three days. Using the windrow composting method, the solid waste attains a temperature of 55° C or greater for at least 15 days during the composting period. Also, during the high temperature period, there will be a minimum of five turnings of the windrow.

Heat drying: Dewatered sludge cake is dried by direct or indirect contact with hot gases, and moisture content is reduced to 10 percent or lower. Sludge particles reach temperatures well in excess of 80° C, or the wet bulb temperature of the gas stream in contact with the sludge at the point where it leaves the dryer is in excess of 80° C.

Heat treatment: Liquid sludge is heated to temperatures of 180° C for 30 minutes.

Thermophilic Aerobic Digestion: Liquid sludge is agitated with air or oxygen to maintain aerobic conditions at residence times of 10 days at 55-60° C, with a volatile solids reduction of at least 38 percent.

Other methods: Other methods or operating conditions may be acceptable if pathogens and vector attraction of the waste (volatile solids) are reduced to an extent equivalent to the reduction achieved by any of the above methods.

Any of the processes listed below, if added to the processes described in Section A above, further reduce pathogens. Because the processes listed below, on their own, do not reduce the attraction of disease vectors, they are only add-on in nature.

Beta ray irradiation: Sludge is irradiated with beta rays from an accelerator at dosages of at least 1.0 megarad at room temperature (ca. 20° C).

Gamma ray irradiation: Sludge is irradiated with gamma rays from certain isotopes, such as ^{60}Cobalt and ^{137}Cesium, at dosages of at least 1.0 megarad at room temperature (ca. 20° C).

Pasteurization: Sludge is maintained for at least 30 minutes at a minimum temperature of 70° C.

Other methods: Other methods or operating conditions may be acceptable if pathogens are reduced to an extent equivalent to the reduction achieved by any of the above add-on methods.

PART 260—HAZARDOUS WASTE MANAGEMENT SYSTEM: GENERAL

Subpart A—General

Sec.
260.1 Purpose, scope, and applicability.
260.2 Availability of information; confidentiality of information.
260.3 Use of number and gender.

Subpart B—Definitions

260.10 Definitions.
260.11 References.

Subpart C—Rulemaking Petitions

260.20 General.
260.21 Petitions for equivalent testing or analytical methods.

260.22 Petitions to amend Part 261 to exclude a waste produced at a particular facility.
260.30 Variances from classification as a solid waste.
260.31 Standards and criteria for variances from classification as a solid waste.
260.32 Variances to be classified as a boiler.
260.33 Procedures for variances from classification as a solid waste or to be classified as a boiler.
260.40 Additional regulation of certain hazardous waste recycling activities on a case-by-case basis.
260.41 Procedures for case-by-case regulation of hazardous waste recycling activities.

APPENDIX I—OVERVIEW OF SUBTITLE C REGULATIONS

AUTHORITY: 42 U.S.C. 6905, 6912(a), 6921-6927, 6930, 6934, 6935, 6937, 6938, 6939, and 6974.

SOURCE: 45 FR 33073, May 19, 1980, unless otherwise noted.

EDITORIAL NOTE: The reporting or recordkeeping provisions included in the final rule published at 47 FR 32274, July 26, 1982, will be submitted for approval to the Office of Management and Budget (OMB), and will not become effective until OMB approval has been obtained. EPA will publish a notice of the effective date of the reporting and recordkeeping provisions of this rule after it obtains OMB approval.

Subpart A—General

§ 260.1 Purpose, scope, and applicability.

(a) This part provides definitions of terms, general standards, and overview information applicable to Parts 260 through 265 and 268 of this chapter.

(b) In this part: (1) Section 260.2 sets forth the rules that EPA will use in making information it receives available to the public and sets forth the requirements that generators, transporters, or owners or operators of treatment, storage, or disposal facilities must follow to assert claims of business confidentiality with respect to information that is submitted to EPA under Parts 260 through 265 and 268 of this chapter.

(2) Section 260.3 establishes rules of grammatical construction for Parts 260 through 265 and 268 of this chapter.

(3) Section 260.10 defines terms which are used in Parts 260 through 265 and 268 of this chapter.

(4) Section 260.20 establishes procedures for petitioning EPA to amend, modify, or revoke any provision of Parts 260 through 265 and 268 of this chapter and establishes procedures governing EPA's action on such petitions.

(5) Section 260.21 establishes procedures for petitioning EPA to approve testing methods as equivalent to those prescribed in Parts 261, 264, or 265 of this chapter.

(6) Section 260.22 establishes procedures for petitioning EPA to amend Subpart D of Part 261 to exclude a waste from a particular facility.

[45 FR 33073, May 19, 1980, as amended at 51 FR 40636, Nov. 7, 1986]

§ 260.2 Availability of information; confidentiality of information.

(a) Any information provided to EPA under Parts 260 through 265 and 268 of this chapter will be made available to the public to the extent and in the manner authorized by the Freedom of Information Act, 5 U.S.C. section 552, section 3007(b) of RCRA and EPA regulations implementing the Freedom of Information Act and section 3007(b), Part 2 of this chapter, as applicable.

(b) Any person who submits information to EPA in accordance with Parts 260 through 266 and 268 of this chapter may assert a claim of business confidentiality covering part or all of that information by following the procedures set forth in § 2.203(b) of this chapter. Information covered by such a claim will be disclosed by EPA only to the extent, and by means of the procedures, set forth in Part 2, Subpart B, of this chapter except that information required by § 262.53(a) which is submitted in notification of intent to export a hazardous waste will be provided to the Department of State and the appropriate authorities in a receiving country regardless of any claims of confidentiality. However, if no such claim accompanies the information when it is received by EPA, it may be made available to the public without further notice to the person submitting it.

[45 FR 33073, May 19, 1980, as amended at 51 FR 28682, Aug. 8, 1986; 51 FR 40636, Nov. 7, 1986]

§ 260.3 Use of number and gender.

As used in Parts 260 through 265 and 268 of this chapter:

(a) Words in the masculine gender also include the feminine and neuter genders; and

(b) Words in the singular include the plural; and

(c) Words in the plural include the singular.

[45 FR 33073, May 19, 1980, as amended at 51 FR 40636, Nov. 7, 1986]

Subpart B—Definitions

§ 260.10 Definitions.

When used in Parts 260 through 265 and 268 of this chapter, the following terms have the meanings given below:

"Above ground tank" means a device meeting the definition of "tank" in § 260.10 and that is situated in such a way that the entire surface area of the tank is completely above the plane of the adjacent surrounding surface and the entire surface area of the tank (including the tank bottom) is able to be visually inspected.

"Act" or *"RCRA"* means the Solid Waste Disposal Act, as amended by the Resource Conservation and Recovery Act of 1976, as amended, 42 U.S.C. section 6901 et seq.

"Active life" of a facility means the period from the initial receipt of hazardous waste at the facility until the Regional Administrator receives certification of final closure.

"Active portion" means that portion of a facility where treatment, storage, or disposal operations are being or have been conducted after the effective date of Part 261 of this chapter and which is not a closed portion. (See also "closed portion" and "inactive portion".)

"Administrator" means the Administrator of the Environmental Protection Agency, or his designee.

"Ancillary equipment" means any device including, but not limited to, such devices as piping, fittings, flanges, valves, and pumps, that is used to distribute, meter, or control the flow of hazardous waste from its point of generation to a storage or treatment tank(s), between hazardous waste storage and treatment tanks to a point of disposal onsite, or to a point of shipment for disposal off-site.

"Aquifer" means a geologic formation, group of formations, or part of a formation capable of yielding a significant amount of ground water to wells or springs.

"Authorized representative" means the person responsible for the overall operation of a facility or an operational unit (i.e., part of a facility), e.g., the plant manager, superintendent or person of equivalent responsibility.

"Boiler" means an enclosed device using controlled flame combustion and having the following characteristics:

(1)(i) The unit must have physical provisions for recovering and exporting thermal energy in the form of steam, heated fluids, or heated gases; and

(ii) The unit's combustion chamber and primary energy recovery sections(s) must be of integral design. To be of integral design, the combustion chamber and the primary energy recovery section(s) (such as waterwalls and superheaters) must be physically formed into one manufactured or assembled unit. A unit in which the combustion chamber and the primary energy recovery section(s) are joined only by ducts or connections carrying flue gas is not integrally designed; however, secondary energy recovery equipment (such as economizers or air preheaters) need not be physically formed into the same unit as the combustion chamber and the primary energy recovery section. The following units are not precluded from being boilers solely because they are not of integral design: process heaters (units that transfer energy directly to a process stream), and fluidized bed combustion units; and

(iii) While in operation, the unit must maintain a thermal energy recovery efficiency of at least 60 percent, calculated in terms of the recovered energy compared with the thermal value of the fuel; and

(iv) The unit must export and utilize at least 75 percent of the recovered energy, calculated on an annual basis. In this calculation, no credit shall be given for recovered heat used internally in the same unit. (Examples of internal use are the preheating of fuel or combustion air, and the driving of induced or forced draft fans or feedwater pumps); or

(2) The unit is one which the Regional Administrator has determined, on a case-by-case basis, to be a boiler, after considering the standards in § 260.32.

"Certification" means a statement of professional opinion based upon knowledge and belief.

"Closed portion" means that portion of a facility which an owner or operator has closed in accordance with the approved facility closure plan and all applicable closure requirements. (See also "active portion" and "inactive portion".)

"Component" means either the tank or ancillary equipment of a tank system.

"Confined aquifer" means an aquifer bounded above and below by impermeable beds or by beds of distinctly lower permeability than that of the aquifer itself; an aquifer containing confined ground water.

"Container" means any portable device in which a material is stored, transported, treated, disposed of, or otherwise handled.

"Contingency plan" means a document setting out an organized, planned, and coordinated course of action to be followed in case of a fire, explosion, or release of hazardous waste or hazardous waste constituents which could threaten human health or the environment.

"Corrosion expert" means a person who, by reason of his knowledge of the physical sciences and the principles of engineering and mathematics, acquired by a professional education and related practical experience, is qualified to engage in the practice of corrosion control on buried or submerged metal piping systems and metal tanks. Such a person must be certified as being qualified by the National Association of Corrosion Engineers (NACE) or be a registered professional engineer who has certification or licensing that includes education and experience in corrosion control on buried or submerged metal piping systems and metal tanks.

"Designated facility" means a hazardous waste treatment, storage, or disposal facility which has received an EPA permit (or a facility with interim status) in accordance with the requirements of Parts 270 and 124 of this chapter, a permit from a State authorized in accordance with Part 271 of this chapter, or that is regulated under § 261.6(c)(2) or Subpart F of Part 266 of this chapter, and that has been designated on the manifest by the generator pursuant to § 262.20.

"Dike" means an embankment or ridge of either natural or man-made materials used to prevent the movement of liquids, sludges, solids, or other materials.

"Discharge" or *"hazardous waste discharge"* means the accidental or intentional spilling, leaking, pumping, pouring, emitting, emptying, or dumping of hazardous waste into or on any land or water.

"Disposal" means the discharge, deposit, injection, dumping, spilling, leaking, or placing of any solid waste or hazardous waste into or on any land or water so that such solid waste or hazardous waste or any constituent thereof may enter the environment or be emitted into the air or discharged into any waters, including ground waters.

"Disposal facility" means a facility or part of a facility at which hazardous waste is intentionally placed into or on any land or water, and at which waste will remain after closure.

"Elementary neutralization unit" means a device which:

(1) Is used for neutralizing wastes which are hazardous wastes only because they exhibit the corrosivity characteristic defined in § 261.22 of this chapter, or are listed in Subpart D of Part 261 of this chapter only for this reason; and,

(2) Meets the definition of tank, container, transport vehicle, or vessel in § 260.10 of this chapter.

"EPA hazardous waste number" means the number assigned by EPA to each hazardous waste listed in Part 261, Subpart D, of this chapter and to each characteristic identified in Part 261, Subpart C, of this chapter.

"EPA identification number" means the number assigned by EPA to each generator, transporter, and treatment, storage, or disposal facility.

"EPA region" means the states and territories found in any one of the following ten regions:

Region I—Maine, Vermont, New Hampshire, Massachusetts, Connecticut, and Rhode Island.
Region II—New York, New Jersey, Commonwealth of Puerto Rico, and the U.S. Virgin Islands.
Region III—Pennsylvania, Delaware, Maryland, West Virginia, Virginia, and the District of Columbia.
Region IV—Kentucky, Tennessee, North Carolina, Mississippi, Alabama, Georgia, South Carolina, and Florida.
Region V—Minnesota, Wisconsin, Illinois, Michigan, Indiana and Ohio.
Region VI—New Mexico, Oklahoma, Arkansas, Louisiana, and Texas.
Region VII—Nebraska, Kansas, Missouri, and Iowa.
Region VIII—Montana, Wyoming, North Dakota, South Dakota, Utah, and Colorado.
Region IX—California, Nevada, Arizona, Hawaii, Guam, American Samoa, Commonwealth of the Northern Mariana Islands.
Region X—Washington, Oregon, Idaho, and Alaska.

"Equivalent method" means any testing or analytical method approved by the Administrator under §§ 260.20 and 260.21.

"Existing hazardous waste management (HWM) facility" or *"existing facility"* means a facility which was in operation or for which construction commenced on or before November 19, 1980. A facility has commenced construction if:

(1) The owner or operator has obtained the Federal, State and local approvals or permits necessary to begin physical construction; and either

(2)(i) A continuous on-site, physical construction program has begun; or

(ii) The owner or operator has entered into contractual obligations—which cannot be cancelled or modified without substantial loss—for physical construction of the facility to be completed within a reasonable time.

"Existing portion" means that land surface area of an existing waste management unit, included in the original Part A permit application, on which wastes have been placed prior to the issuance of a permit.

"Existing tank system" or *"existing component"* means a tank system or component that is used for the storage or treatment of hazardous waste and that is in operation, or for which installation has commenced on or prior to July 14, 1986. Installation will be considered to have commenced if the owner or operator has obtained all Federal, State, and local approvals or permits necessary to begin physical construction of the site or installation of the tank system and if either (1) a continuous on-site physical construction or installation program has begun, or (2) the owner or operator has entered into contractual obligations—which cannot be canceled or modified without substantial loss—for physical construction of the site or installation of the tank system to be completed within a reasonable time.

"Facility" means all contiguous land, and structures, other appurtenances, and improvements on the land, used for treating, storing, or disposing of hazardous waste. A facility may consist of several treatment, storage, or disposal operational units (e.g., one or more landfills, surface impoundments, or combinations of them).

"Federal agency" means any department, agency, or other instrumentality of the Federal Government, any independent agency or establishment of the Federal Government including any Government corporation, and the Government Printing Office.

"Federal, State and local approvals or permits necessary to begin physical construction" means permits and approvals required under Federal, State or local hazardous waste control statutes, regulations or ordinances.

"Final closure" means the closure of all hazardous waste management units at the facility in accordance with all applicable closure requirements so that hazardous waste management activities under Parts 264 and 265 of this chapter are no longer conducted at the facility unless subject to the provisions in § 262.34.

"Food-chain crops" means tobacco, crops grown for human consumption, and crops grown for feed for animals whose products are consumed by humans.

"Free liquids" means liquids which readily separate from the solid portion of a waste under ambient temperature and pressure.

"Freeboard" means the vertical distance between the top of a tank or surface impoundment dike, and the surface of the waste contained therein.

"Generator" means any person, by site, whose act or process produces hazardous waste identified or listed in Part 261 of this chapter or whose act first causes a hazardous waste to become subject to regulation.

"Ground water" means water below the land surface in a zone of saturation.

"Hazardous waste" means a hazardous waste as defined in § 261.3 of this chapter.

"Hazardous waste constituent" means a constituent that caused the Administrator to list the hazardous waste in Part 261, Subpart D, of this chapter, or a constituent listed in Table 1 of § 261.24 of this chapter.

"Hazardous waste management unit" is a contiguous area of land on or in which hazardous waste is placed, or the largest area in which there is significant likelihood of mixing hazardous waste constituents in the same area. Examples of hazardous waste management units include a surface impoundment, a waste pile, a land treatment area, a landfill cell, an incinerator, a tank and its associated piping and underlying containment system and a container storage area. A container alone does not constitute a unit; the unit includes containers and the land or pad upon which they are placed.

"In operation" refers to a facility which is treating, storing, or disposing of hazardous waste.

"Inactive portion" means that portion of a facility which is not operated after the effective date of Part 261 of this chapter. (See also "active portion" and "closed portion".)

"Incinerator" means any enclosed device using controlled flame combustion that neither meets the criteria for classification as a boiler nor is listed as an industrial furnace.

"Incompatible waste" means a hazardous waste which is unsuitable for:

(1) Placement in a particular device or facility because it may cause corrosion or decay of containment materials (e.g., container inner liners or tank walls); or

(2) Commingling with another waste or material under uncontrolled conditions because the commingling might produce heat or pressure, fire or explosion, violent reaction, toxic dusts, mists, fumes, or gases, or flammable fumes or gases.

(See Part 265, Appendix V, of this chapter for examples.)

"Individual generation site" means the contiguous site at or on which one or more hazardous wastes are generated. An individual generation site, such as a large manufacturing plant, may have one or more sources of hazardous waste but is considered a single or individual generation site if the site or property is contiguous.

"Industrial furnace" means any of the following enclosed devices that are integral components of manufacturing processes and that use controlled flame devices to accomplish recovery of materials or energy:

(1) Cement kilns
(2) Lime kilns
(3) Aggregate kilns
(4) Phosphate kilns
(5) Coke ovens
(6) Blast furnaces
(7) Smelting, melting and refining furnaces (including pyrometallurgical devices such as cupolas, reverberator furnaces, sintering machine, roasters, and foundry furnaces)
(8) Titanium dioxide chloride process oxidation reactors
(9) Methane reforming furnaces
(10) Pulping liquor recovery furnaces
(11) Combustion devices used in the recovery of sulfur values from spent sulfuric acid
(12) Such other devices as the Administrator may, after notice and comment, add to this list on the basis of one or more of the following factors:

(i) The design and use of the device primarily to accomplish recovery of material products;

(ii) The use of the device to burn or reduce raw materials to make a material product;

(iii) The use of the device to burn or reduce secondary materials as effective substitutes for raw materials, in processes using raw materials as principal feedstocks;

(iv) The use of the device to burn or reduce secondary materials as ingredients in an industrial process to make a material product;

(v) The use of the device in common industrial practice to produce a material product; and

(vi) Other factors, as appropriate.

"Inground tank" means a device meeting the definition of "tank" in § 260.10 whereby a portion of the tank wall is situated to any degree within the ground, thereby preventing visual inspection of that external surface area of the tank that is in the ground.

"Injection well" means a well into which fluids are injected. (See also "underground injection".)

"Inner liner" means a continuous layer of material placed inside a tank or container which protects the construction materials of the tank or container from the contained waste or reagents used to treat the waste.

"Installation inspector" means a person who, by reason of his knowledge of the physical sciences and the principles of engineering, acquired by a professional education and related practical experience, is qualified to supervise the installation of tank systems.

"International shipment" means the transportation of hazardous waste into or out of the jurisdiction of the United States.

"Landfill" means a disposal facility or part of a facility where hazardous waste is placed in or on land and which is not a pile, a land treatment facility, a surface impoundment, an underground injection well, a salt dome formation, a salt bed formation, an underground mine, or a cave.

"Landfill cell" means a discrete volume of a hazardous waste landfill which uses a liner to provide isolation of wastes from adjacent cells or wastes. Examples of landfill cells are trenches and pits.

"Land treatment facility" means a facility or part of a facility at which hazardous waste is applied onto or incorporated into the soil surface; such facilities are disposal facilities if the waste will remain after closure.

"Leachate" means any liquid, including any suspended components in the liquid, that has percolated through or drained from hazardous waste.

"Leak-detection system" means a system capable of detecting the failure of either the primary or secondary containment structure or the presence of a release of hazardous waste or accumulated liquid in the secondary containment structure. Such a system must employ operational controls (e.g., daily visual inspections for releases into the secondary containment system of aboveground tanks) or consist of an interstitial monitoring device designed to detect continuously and automatically the failure of the primary or secondary containment structure or the presence of a release of hazardous waste into the secondary containment structure.

"Liner" means a continuous layer of natural or man-made materials, beneath or on the sides of a surface impoundment, landfill, or landfill cell, which restricts the downward or lateral escape of hazardous waste, hazardous waste constituents, or leachate.

"Management" or *"hazardous waste management"* means the systematic control of the collection, source separation, storage, transportation, processing, treatment, recovery, and disposal of hazardous waste.

"Manifest" means the shipping document EPA form 8700-22 and, if necessary, EPA form 8700-22A, originated and signed by the generator in accordance with the instructions included in the Appendix to Part 262.

"Manifest document number" means the U.S. EPA twelve digit identification number assigned to the generator plus a unique five digit document number assigned to the Manifest by the generator for recording and reporting purposes.

"Mining overburden returned to the mine site" means any material overlying an economic mineral deposit which is removed to gain access to that deposit and is then used for reclamation of a surface mine.

"Miscellaneous unit" means a hazardous waste management unit where hazardous waste is treated, stored, or disposed of and that is not a container, tank, surface impoundment, pile, land treatment unit, landfill, incinerator, boiler, industrial furnace, underground injection well with appropriate technical standards under 40 CFR Part 146, or unit eligible for a research, development, and demonstration permit under § 270.65.

"Movement" means that hazardous waste transported to a facility in an individual vehicle.

"New hazardous waste management facility" or *"new facility"* means a facility which began operation, or for which construction commenced after October 21, 1976. (See also "Existing hazardous waste management facility".)

"New tank system" or *"new tank component"* means a tank system or component that will be used for the storage or treatment of hazardous waste and for which installation has commenced after July 14, 1986; except, however, for purposes of § 264.193(g)(2) and § 265.193(g)(2), a new tank system is one for which construction commences after July 14, 1986. (See also "existing tank system.")

"On ground tank" means a device meeting the definition of "tank" in § 260.10 and that is situated in such a way that the bottom of the tank is on the same level as the adjacent surrounding surface so that the external tank bottom cannot be visually inspected.

"On-site" means the same or geographically contiguous property which may be divided by public or private right-of-way, provided the entrance and exit between the properties is at a cross-roads intersection, and access is by crossing as opposed to going along, the right-of-way. Non-contiguous properties owned by the same person but connected by a right-of-way which he controls and to which the public does not have access, is also considered on-site property.

"Open burning" means the combustion of any material without the following characteristics:

(1) Control of combustion air to maintain adequate temperature for efficient combustion,

(2) Containment of the combustion-reaction in an enclosed device to provide sufficient residence time and mixing for complete combustion, and

(3) Control of emission of the gaseous combustion products.

(See also "incineration" and "thermal treatment".)

"Operator" means the person responsible for the overall operation of a facility.

"Owner" means the person who owns a facility or part of a facility.

"Partial closure" means the closure of a hazardous waste management unit in accordance with the applicable closure requirements of Parts 264 and 265 of this chapter at a facility that contains other active hazardous waste management units. For example, partial closure may include the closure of a tank (including its associated piping and underlying containment systems), landfill cell, surface impoundment, waste pile, or other hazardous waste management unit, while other units of the same facility continue to operate.

"Person" means an individual, trust, firm, joint stock company, Federal Agency, corporation (including a government corporation), partnership, association, State, municipality, commission, political subdivision of a State, or any interstate body.

"Personnel" or *"facility personnel"* means all persons who work, at, or oversee the operations of, a hazardous waste facility, and whose actions or failure to act may result in noncompliance with the requirements of Part 264 or 265 of this chapter.

"Pile" means any non-containerized accumulation of solid, nonflowing hazardous waste that is used for treatment or storage.

"Point source" means any discernible, confined, and discrete conveyance, including, but not limited to any pipe, ditch, channel, tunnel, conduit, well, discrete fissure, container, rolling stock, concentrated animal feeding operation, or vessel or other floating craft, from which pollutants are or

may be discharged. This term does not include return flows from irrigated agriculture.

"Publicly owned treatment works" or *"POTW"* means any device or system used in the treatment (including recycling and reclamation) of municipal sewage or industrial wastes of a liquid nature which is owned by a "State" or "municipality" (as defined by section 502(4) of the CWA). This definition includes sewers, pipes, or other conveyances only if they convey wastewater to a POTW providing treatment.

"Regional Administrator" means the Regional Administrator for the EPA Region in which the facility is located, or his designee.

"Representative sample" means a sample of a universe or whole (e.g., waste pile, lagoon, ground water) which can be expected to exhibit the average properties of the universe or whole.

"Run-off" means any rainwater, leachate, or other liquid that drains over land from any part of a facility.

"Run-on" means any rainwater, leachate, or other liquid that drains over land onto any part of a facility.

"Saturated zone" or *"zone of saturation"* means that part of the earth's crust in which all voids are filled with water.

"Sludge" means any solid, semi-solid, or liquid waste generated from a municipal, commercial, or industrial wastewater treatment plant, water supply treatment plant, or air pollution control facility exclusive of the treated effluent from a wastewater treatment plant.

"Small Quantity Generator" means a generator who generates less than 1000 kg of hazardous waste in a calendar month.

"Solid waste" means a solid waste as defined in § 261.2 of this chapter.

"State" means any of the several States, the District of Columbia, the Commonwealth of Puerto Rico, the Virgin Islands, Guam, American Samoa, and the Commonwealth of the Northern Mariana Islands.

"Storage" means the holding of hazardous waste for a temporary period, at the end of which the hazardous waste is treated, disposed of, or stored elsewhere.

"Sump" means any pit or reservoir that meets the definition of tank and those troughs/trenches connected to it that serves to collect hazardous waste for transport to hazardous waste storage, treatment, or disposal facilities.

"Surface impoundment" or *"impoundment"* means a facility or part of a facility which is a natural topographic depression, man-made excavation, or diked area formed primarily of earthen materials (although it may be lined with man-made materials), which is designed to hold an accumulation of liquid wastes or wastes containing free liquids, and which is not an injection well. Examples of surface impoundments are holding, storage, settling, and aeration pits, ponds, and lagoons.

"Tank" means a stationary device, designed to contain an accumulation of hazardous waste which is constructed primarily of non-earthen materials (e.g., wood, concrete, steel, plastic) which provide structural support.

"Tank system" means a hazardous waste storage or treatment tank and its associated ancillary equipment and containment system.

"Thermal treatment" means the treatment of hazardous waste in a device which uses elevated temperatures as the primary means to change the chemical, physical, or biological character or composition of the hazardous waste. Examples of thermal treatment processes are incineration, molten salt, pyrolysis, calcination, wet air oxidation, and microwave discharge. (See also "incinerator" and "open burning".)

"Totally enclosed treatment facility" means a facility for the treatment of hazardous waste which is directly connected to an industrial production process and which is constructed and operated in a manner which prevents the release of any hazardous waste or any constituent thereof into the environment during treatment. An example is a pipe in which waste acid is neutralized.

"Transfer facility" means any transportation related facility including loading docks, parking areas, storage areas and other similar areas where shipments of hazardous waste are held during the normal course of transportation.

"Transport vehicle" means a motor vehicle or rail car used for the transportation of cargo by any mode. Each cargo-carrying body (trailer, railroad freight car, etc.) is a separate transport vehicle.

"Transportation" means the movement of hazardous waste by air, rail, highway, or water.

"Transporter" means a person engaged in the offsite transportation of hazardous waste by air, rail, highway, or water.

"Treatment" means any method, technique, or process, including neutralization, designed to change the physical, chemical, or biological character or composition of any hazardous waste so as to neutralize such waste, or so as to recover energy or material resources from the waste, or so as to render such waste non-hazardous, or less hazardous; safer to transport, store, or dispose of; or amenable for recovery, amenable for storage, or reduced in volume.

"Treatment zone" means a soil area of the unsaturated zone of a land treatment unit within which hazardous constituents are degraded, transformed, or immobilized.

"Underground injection" means the subsurface emplacement of fluids through a bored, drilled or driven well; or through a dug well, where the depth of the dug well is greater than the largest surface dimension. (See also "injection well".)

"Underground tank" means a device meeting the definition of "tank" in § 260.10 whose entire surface area is totally below the surface of and covered by the ground.

"Unfit-for use tank system" means a tank system that has been determined through an integrity assessment or other inspection to be no longer capable of storing or treating hazardous waste without posing a threat of release of hazardous waste to the environment.

"Unsaturated zone" or *"zone of aeration"* means the zone between the land surface and the water table.

"United States" means the 50 States, the District of Columbia, the Commonwealth of Puerto Rico, the U.S. Virgin Islands, Guam, American Samoa, and the Commonwealth of the Northern Mariana Islands.

"Uppermost aquifer" means the geologic formation nearest the natural ground surface that is an aquifer, as well as lower aquifers that are hydraulically interconnected with this aquifer within the facility's property boundary.

"Vessel" includes every description of watercraft, used or capable of being used as a means of transportation on the water.

"Wastewater treatment unit" means a device which:

(1) Is part of a wastewater treatment facility which is subject to regulation under either section 402 or 307(b) of the Clean Water Act; and

(2) Receives and treats or stores an influent wastewater which is a hazardous waste as defined in § 261.3 of this chapter, or generates and accumulates a wastewater treatment sludge which is a hazardous waste as defined in § 261.3 of this chapter, or treats or stores a wastewater treatment sludge which is a hazardous waste as defined in § 261.3 of this chapter; and

(3) Meets the definition of tank in § 260.10 of this chapter.

"Water (bulk shipment)" means the bulk transportation of hazardous waste which is loaded or carried on board a vessel without containers or labels.

"Well" means any shaft or pit dug or bored into the earth, generally of a cylindrical form, and often walled with bricks or tubing to prevent the earth from caving in.

"Well injection": (See "underground injection".)

"Zone of engineering control" means an area under the control of the owner/operator that, upon detection of a hazardous waste release, can be readily cleaned up prior to the release of hazardous waste or hazardous constituents to ground water or surface water.

[45 FR 33073, May 19, 1980]

EDITORIAL NOTE: FOR FEDERAL REGISTER citations affecting § 260.10, see the List of

CFR Sections Affected in the Finding Aids section of this volume.

§ 260.11 References.

(a) When used in Parts 260 through 270 of this chapter, the following publications are incorporated by reference:

"ASTM Standard Test Methods for Flash Point of Liquids by Setaflash Closed Tester," ASTM Standard D-3278-78, available from American Society for Testing and Materials, 1916 Race Street, Philadelphia, PA 19103.

"ASTM Standard Test Methods for Flash Point by Pensky-Martens Closed Tester," ASTM Standard D-93-79 or D-93-80. D-93-80 is available from American Society for Testing and Materials, 1916 Race Street, Philadelphia, PA 19103.

"Flammable and Combustible Liquids Code" (1977 or 1981), available from the National Fire Protection Association, 470 Atlantic Avenue, Boston, MA 02210.

"Test Methods for Evaluating Solid Waste, Physical/Chemical Methods", EPA Publication SW-846 [Second Edition, 1982 as amended by Update I (April, 1984), and Update II (April, 1985)]. The second edition of SW-846 and Updates I and II are available from the National Technical Information Service, 5285 Port Royal Road, Springfield, VA 22161, (703) 487-4600, as document no. PB 87-120-291. The cost is $48.95 for paper and $13.50 for microfiche.

(b) The references listed in paragraph (a) of this section are also available for inspection at the Office of the Federal Register, 1100 L Street, NW, Washington, DC 20408. These incorporations by reference were approved by the Director of the Federal Register. These materials are incorporated as they exist on the date of approval and a notice of any change in these materials will be published in the FEDERAL REGISTER.

[46 FR 35247, July 7, 1981, as amended at 50 FR 18374, Apr. 30, 1985; 52 FR 8073, Mar. 16, 1987; 52 FR 41295, Oct. 27, 1987]

Subpart C—Rulemaking Petitions

§ 260.20 General.

(a) Any person may petition the Administrator to modify or revoke any provision in Parts 260 through 265 and 268 of this chapter. This section sets forth general requirements which apply to all such petitions. Section 260.21 sets forth additional requirements for petitions to add a testing or analytical method to Part 261, 264 or 265. Section 260.22 sets forth additional requirements for petitions to exclude a waste at a particular facility from § 261.3 of this chapter or the lists of hazardous wastes in Subpart D of Part 261.

(b) Each petition must be submitted to the Administrator by certified mail and must include:

(1) The petitioner's name and address;

(2) A statement of the petitioner's interest in the proposed action;

(3) A description of the proposed action, including (where appropriate) suggested regulatory language; and

(4) A statement of the need and justification for the proposed action, including any supporting tests, studies, or other information.

(c) The Administrator will make a tentative decision to grant or deny a petition and will publish notice of such tentative decision, either in the form of an advanced notice of proposed rulemaking, a proposed rule, or a tentative determination to deny the petition, in the FEDERAL REGISTER for written public comment.

(d) Upon the written request of any interested person, the Administrator may, at his discretion, hold an informal public hearing to consider oral comments on the tentative decision. A person requesting a hearing must state the issues to be raised and explain why written comments would not suffice to communicate the person's views. The Administrator may in any case decide on his own motion to hold an informal public hearing.

(e) After evaluating all public comments the Administrator will make a final decision by publishing in the FEDERAL REGISTER a regulatory amendment or a denial of the petition.

[45 FR 33073, May 19, 1980, as amended at 51 FR 40636, Nov. 7, 1986]

§ 260.21 Petitions for equivalent testing or analytical methods.

(a) Any person seeking to add a testing or analytical method to Part 261, 264, or 265 of this chapter may petition for a regulatory amendment under this section and § 260.20. To be successful, the person must demonstrate to the satisfaction of the Administrator that the proposed method is equal to or superior to the corresponding method prescribed in Part 261, 264, or 265 of this chapter, in terms of its sensitivity, accuracy, and precision (i.e., reproducibility).

(b) Each petition must include, in addition to the information required by § 260.20(b):

(1) A full description of the proposed method, including all procedural steps and equipment used in the method;

(2) A description of the types of wastes or waste matrices for which the proposed method may be used;

(3) Comparative results obtained from using the proposed method with those obtained from using the relevant or corresponding methods prescribed in Part 261, 264, or 265 of this chapter;

(4) An assessment of any factors which may interfere with, or limit the use of, the proposed method; and

(5) A description of the quality control procedures necessary to ensure the sensitivity, accuracy and precision of the proposed method.

(c) After receiving a petition for an equivalent method, the Administrator may request any additional information on the proposed method which he may reasonably require to evaluate the method.

(d) If the Administrator amends the regulations to permit use of a new testing method, the method will be incorporated in "Test Methods for the Evaluation of Solid Waste: Physical/Chemical Methods," SW-846, U.S. Environmental Protection Agency, Office of Solid Waste, Washington, DC 20460.

[45 FR 33073, May 19, 1980, as amended at 49 FR 47391, Dec. 4, 1984]

§ 260.22 Petitions to amend Part 261 to exclude a waste produced at a particular facility.

(a) Any person seeking to exclude a waste at a particular generating facility from the lists in Subpart D of Part 261 may petition for a regulatory amendment under this section and § 260.20. To be successful:

(1) The petitioner must demonstrate to the satisfaction of the Administrator that the waste produced by a particular generating facility does not meet any of the criteria under which the waste was listed as a hazardous or an actutely hazardous waste; and

(2) Based on a complete application, the Administrator must determine, where he has a reasonable basis to believe that factors (including additional constituents) other than those for which the waste was listed could cause the waste to be a hazardous waste, that such factors do not warrant retaining the waste as a hazardous waste. A waste which is so excluded, however, still may be a hazardous waste by operation of Subpart C of Part 261.

(b) The procedures in this section and § 260.20 may also be used to petition the Administrator for a regulatory amendment to exclude from § 261.3(a)(2)(ii) or (c), a waste which is described in those sections and is either a waste listed in Subpart D, contains a waste listed in Subpart D, or is derived from a waste listed in Subpart D. This exclusion may only be issued for a particular generating, storage, treatment, or disposal facility. The petitioner must make the same demonstration as required by paragraph (a) of this section, except that where the waste is a mixture of solid waste and one or more listed hazardous wastes or is derived from one or more hazardous wastes, his demonstration may be made with respect to each constituent listed waste or the waste mixture as a whole. A waste which is so excluded may still be a hazardous waste by operation of Subpart C of Part 261.

(c) If the waste is listed with codes "I", "C", "R", or "E", in Subpart D,

(1) The petitioner must show that the waste does not exhibit the relevant characteristic for which the waste was listed as defined in § 261.21, § 261.22, § 261.23, or § 261.24 using any applicable methods prescribed therein. The petitioner also must show that the waste does not exhibit any of the other characteristics defined in § 261.21, § 261.22, § 261.23, or § 261.24 using any applicable methods prescribed therein;

(2) Based on a complete application, the Administrator must determine,

where he has a reasonable basis to believe that factors (including additional constituents) other than those for which the waste was listed could cause the waste to be hazardous waste, that such factors do not warrant retaining the waste as a hazardous waste. A waste which is so excluded, however, still may be a hazardous waste by operation of Subpart C of Part 261.

(d) If the waste is listed with code "T" in Subpart D,

(1) The petitioner must demonstrate that the waste:

(i) Does not contain the constituent or constituents (as defined in Appendix VII of Part 261) that caused the Administrator to list the waste, using the appropriate test methods prescribed in Appendix III; or

(ii) Although containing one or more of the hazrdous constituents (as defined in Appendix VII of Part 261) that caused the Administrator to list the waste, does not meet the criterion of § 261.11(a)(3) when considering the factors used by the Administrator in § 261.11(a)(3) (i) through (xi) under which the waste was listed as hazardous; and

(2) Based on a complete application, the Administrator must determine, where he has a reasonable basis to believe that factors (including additional constituents) other than those for which the waste was listed could cause the waste to be a hazardous waste, that such factors do not warrant retaining the waste as a hazardous waste; and

(3) The petitioner must demonstrate that the waste does not exhibit any of the characteristics defined in § 261.21, § 261.22, § 261.23, and § 261.24 using any applicable methods prescribed therein;

(4) A waste which is so excluded, however, still may be a hazardous waste by operation of Subpart C of Part 261.

(e) If the waste is listed with the code "H" in Subpart D,

(1) The petitioner must demonstrate that the waste does not meet the criterion of § 261.11(a)(2); and

(2) Based on a complete application, the Administrator must determine, where he has a reasonable basis to believe that additional factors (including additional constituents) other than those for which the waste was listed could cause the waste to be a hazardous waste, that such factors do not warrant retaining the waste as a hazardous waste; and

(3) The petitioner must demonstrate that the waste does not exhibit any of the characteristics defined in § 261.21, § 261.22, § 261.23, and § 261.24 using any applicable methods prescribed therein;

(4) A waste which is so excluded, however, still may be a hazardous waste by operation of Subpart C of Part 261.

(f) [Reserved for listing radioactive wastes.]

(g) [Reserved for listed infectious wastes.]

(h) Demonstration samples must consist of enough representative samples, but in no case less than four samples, taken over a period of time sufficient to represent the variability or the uniformity of the waste.

(i) Each petition must include, in addition to the information required by § 260.20(b):

(1) The name and address of the laboratory facility performing the sampling or tests of the waste;

(2) The names and qualifications of the persons sampling and testing the waste;

(3) The dates of sampling and testing;

(4) The location of the generating facility;

(5) A description of the manufacturing processes or other operations and feed materials producing the waste and an assessment of whether such processes, operations, or feed materials can or might produce a waste that is not covered by the demonstration;

(6) A description of the waste and an estimate of the average and maximum monthly and annual quantities of waste covered by the demonstration;

(7) Pertinent data on and discussion of the factors delineated in the respective criterion for listing a hazardous waste, where the demonstration is based on the factors in § 261.11(a)(3);

(8) A description of the methodologies and equipment used to obtain the representative samples;

(9) A description of the sample handling and preparation techniques, including techniques used for extraction, containerization and preservation of the samples;

(10) A description of the tests performed (including results);

(11) The names and model numbers of the instruments used in performing the tests; and

(12) The following statement signed by the generator of the waste or his authorized representative:

I certify under penalty of law that I have personally examined and am familiar with the information submitted in this demonstration and all attached documents, and that, based on my inquiry of those individuals immediately responsible for obtaining the information, I believe that the submitted information is true, accurate, and complete. I am aware that there are significant penalties for submitting false information, including the possibility of fine and imprisonment.

(j) After receiving a petition for an exclusion, the Administrator may request any additional information which he may reasonably require to evaluate the petition.

(k) An exclusion will only apply to the waste generated at the individual facility covered by the demonstration and will not apply to waste from any other facility.

(l) The Administrator may exclude only part of the waste for which the demonstration is submitted where he has reason to believe that variability of the waste justifies a partial exclusion.

[45 FR 33073, May 19, 1980, as amended at 50 FR 28742, July 15, 1985]

EDITORIAL NOTE: For information on the availability of a guidance manual for petitions to delist hazardous wastes, see 50 FR 21607, May 28, 1985.

§ 260.30 Variances from classification as a solid waste.

In accordance with the standards and criteria in § 260.31 and the procedures in § 260.33, the Regional Administrator may determine on a case-by-case basis that the following recycled materials are not solid wastes:

(a) Materials that are accumulated speculatively without sufficient amounts being recycled (as defined in § 261.1(c)(8) of this chapter);

(b) Materials that are reclaimed and then reused within the original primary production process in which they were generated;

(c) Materials that have been reclaimed but must be reclaimed further before the materials are completely recovered.

[50 FR 661, Jan. 4, 1985; 50 FR 14219, Apr. 11, 1985]

§ 260.31 Standards and criteria for variances from classification as a solid waste.

(a) The Regional Administrator may grant requests for a variance from classifying as a solid waste those materials that are accumulated speculatively without sufficient amounts being recycled if the applicant demonstrates that sufficient amounts of the material will be recycled or transferred for recycling in the following year. If a variance is granted, it is valid only for the following year, but can be renewed, on an annual basis, by filing a new application. The Regional Administrator's decision will be based on the following standards and criteria:

(1) The manner in which the material is expected to be recycled, when the material is expected to be recycled, and whether this expected disposition is likely to occur (for example, because of past practice, market factors, the nature of the material, or contractual arrangements for recycling);

(2) The reason that the applicant has accumulated the material for one or more years without recycling 75 percent of the volume accumulated at the beginning of the year;

(3) The quantity of material already accumulated and the quantity expected to be generated and accumulated before the material is recycled;

(4) The extent to which the material is handled to minimize loss;

(5) Other relevant factors.

(b) The Regional Administrator may grant requests for a variance from classifying as a solid waste those materials that are reclaimed and then reused as feedstock within the original primary production process in which the materials were generated if the

reclamation operation is an essential part of the production process. This determination will be based on the following criteria:

(1) How economically viable the production process would be if it were to use virgin materials, rather than reclaimed materials;

(2) The prevalence of the practice on an industry-wide basis;

(3) The extent to which the material is handled before reclamation to minimize loss;

(4) The time periods between generating the material and its reclamation, and between reclamation and return to the original primary production process;

(5) The location of the reclamation operation in relation to the production process;

(6) Whether the reclaimed material is used for the purpose for which it was originally produced when it is returned to the original process, and whether it is returned to the process in substantially its original form;

(7) Whether the person who generates the material also reclaims it;

(8) Other relevant factors.

(c) The Regional Administrator may grant requests for a variance from classifying as a solid waste those materials that have been reclaimed but must be reclaimed further before recovery is completed if, after initial reclamation, the resulting material is commodity-like (even though it is not yet a commercial product, and has to be reclaimed further). This determination will be based on the following factors:

(1) The degree of processing the material has undergone and the degree of further processing that is required;

(2) The value of the material after it has been reclaimed;

(3) The degree to which the reclaimed material is like an analogous raw material;

(4) The extent to which an end market for the reclaimed material is guaranteed;

(5) The extent to which the reclaimed material is handled to minimize loss;

(6) Other relevant factors.

[50 FR 66[illegible] n. 4, 1985]

§ 260.32 Variance to be classified as a boiler.

In accordance with the standards and criteria in § 260.10 (definition of "boiler"), and the procedures in § 260.33, the Regional Administrator may determine on a case-by-case basis that certain enclosed devices using controlled flame combustion are boilers, even though they do not otherwise meet the definition of boiler contained in § 260.10, after considering the following criteria:

(a) The extent to which the unit has provisions for recovering and exporting thermal energy in the form of steam, heated fluids, or heated gases; and

(b) The extent to which the combustion chamber and energy recovery equipment are of integral design; and

(c) The efficiency of energy recovery, calculated in terms of the recovered energy compared with the thermal value of the fuel; and

(d) The extent to which exported energy is utilized; and

(e) The extent to which the device is in common and customary use as a "boiler" functioning primarily to produce steam, heated fluids, or heated gases; and

(f) Other factors, as appropriate.

[50 FR 662, Jan. 4, 1985]

§ 260.33 Procedures for variances from classification as a solid waste or to be classified as a boiler.

The Regional Administrator will use the following procedures in evaluating applications for variances from classification as a solid waste or applications to classify particular enclosed flame combustion devices as boilers:

(a) The applicant must apply to the Regional Administrator in the region where the recycler is located. The application must address the relevant criteria contained in § 260.31 or § 260.32 of this part.

(b) The Regional Administrator will evaluate the application and issue a draft notice tentatively granting or denying the application. Notification of this tentative decision will be provided by newspaper advertisement and radio broadcast in the locality where the recycler is located. The Regional Administrator will accept comment on the tentative decision for 30 days, and may also hold a public hearing upon request or at his discretion. The Regional Administrator will issue a final decision after receipt of comments and after the hearing (if any), and this decision may not be appealed to the Administrator.

[50 FR 662, Jan. 4, 1985]

§ 260.40 Additional regulation of certain hazardous waste recycling activities on a case-by-case basis.

(a) The Regional Administrator may decide on a case-by-case basis that persons accumulating or storing the recyclable materials described in § 261.6(a)(2)(iv) of this chapter should be regulated under § 261.6 (b) and (c) of this chapter. The basis for this decision is that the materials are being accumulated or stored in a manner that does not protect human health and the environment because the materials or their toxic constituents have not been adequately contained, or because the materials being accumulated or stored together are incompatible. In making this decision, the Regional Administrator will consider the following factors:

(1) The types of materials accumulated or stored and the amounts accumulated or stored;

(2) The method of accumulation or storage;

(3) The length of time the materials have been accumulated or stored before being reclaimed;

(4) Whether any contaminants are being released into the environment, or are likely to be so released; and

(5) Other relevant factors.

The procedures for this decision are set forth in § 260.41 of this chapter.

[50 FR 662, Jan. 4, 1985]

§ 260.41 Procedures for case-by-case regulation of hazardous waste recycling activities.

The Regional Administrator will use the following procedures when determining whether to regulate hazardous waste recycling activities described in § 261.6(a)(2)(iv) under the provisions of § 261.6 (b) and (c), rather than under the provisions of Subpart F of Part 266 of this chapter.

(a) If a generator is accumulating the waste, the Regional Administrator will issue a notice setting forth the factual basis for the decision and stating that the person must comply with the applicable requirements of Subparts A, C, D, and E of Part 262 of this chapter. The notice will become final within 30 days, unless the person served requests a public hearing to challenge the decision. Upon receiving such a request, the Regional Administrator will hold a public hearing. The Regional Administrator will provide notice of the hearing to the public and allow public participation at the hearing. The Regional Administrator will issue a final order after the hearing stating whether or not compliance with Part 262 is required. The order becomes effective 30 days after service of the decision unless the Regional Administrator specifies a later date or unless review by the Administrator is requested. The order may be appealed to the Administrator by any person who participated in the public hearing. The Administrator may choose to grant or to deny the appeal. Final Agency action occurs when a final order is issued and Agency review procedures are exhausted.

(b) If the person is accumulating the recyclable material as a storage facility, the notice will state that the person must obtain a permit in accordance with all applicable provisions of Parts 270 and 124 of this chapter. The owner or operator of the facility must apply for a permit within no less than 60 days and no more than six months of notice, as specified in the notice. If the owner or operator of the facility wishes to challenge the Regional Administrator's decision, he may do so in his permit application, in a public hearing held on the draft permit, or in comments filed on the draft permit or on the notice of intent to deny the permit. The fact sheet accompanying the permit will specify the reasons for the Agency's determination. The question of whether the Regional Administrator's decision was proper will remain open for consideration during the public comme[illegible] period discussed

under § 124.11 of this chapter and in any subsequent hearing.

[50 FR 663, Jan. 4, 1985]

APPENDIX I—OVERVIEW OF SUBTITLE C REGULATIONS

The Agency believes that there are many people who suspect, but are not sure, that their activities are subject to control under the RCRA Subtitle C rules. This appendix is written for these people. It is designed to help those who are unfamiliar with the hazardous waste control program to determine with which, if any, of the regulations they should comply.

Definition of Solid Waste

The first question which such a person should ask himself is: "Is the material I handle a solid waste?" If the answer to this question is "No", then the material is not subject to control under RCRA and, therefore, the person need not worry about whether he should comply with the Subtitle C rules.

Section 261.2 of this chapter provides a definition of "solid waste" which expands the statutory definition of that term given in section 1004(27) of RCRA. This definition is diagrammed in Figure 1 below.

Figure 1 explains that all materials are either: (1) Garbage refuse, or sludge; (2) solid, liquid, semi-solid or contained gaseous material; or (3) something else. No materials in the third category are solid waste. All materials in the first category are solid waste. Materials in the second category are solid waste unless they are one of the five exclusions specified in § 261.4(a).

Definition of Hazardous Waste

If a person has determined that his material is a "solid waste", the next question he should ask is: "Is the solid waste I handle a hazardous waste?"

Hazardous waste is defined in § 261.3 of this chapter. Section 261.3 provides that, in general, a solid waste is a hazardous waste if: (1) It is, or contains, a hazardous waste listed in Subpart D of Part 261 of this chapter, or (2) the waste exhibits any of the characteristics defined in Subpart C of Part 261. However, Parts 260 and 261 also contain provisions which exclude (§§ 261.4(b), 260.20, and 260.22) certain solid wastes from the definition of "hazardous waste", even though they are listed in Subpart D or exhibit one or more of the characteristics defined in Subpart C. Figure 2 depicts the interplay of these special provisions with the definition of "hazardous waste". It presents a series of questions which a person should ask himself concerning his waste. After doing so, the person should be able to determine if the solid waste he handles is a hazardous waste.

Hazardous Waste Regulations

If this is the case, the person should look at Figure 3. Figure 3 depicts the special provisions specified in the final Part 261 rules for hazardous waste which:

1. Is generated by a small quantity generator
2. Is or is intended to be legitimately and beneficially used, re-used, recycled, or reclaimed
3. Is a sludge; is listed in Part 261, Subpart D; or is a mixture containing a waste listed in Part 261, Subpart D.

For each of these Groups, Figure 3 indicates with which Subtitle C regulations (if any) the person handling these wastes must comply. Figure 3 also explains that, if a person handles hazardous waste which is not included in any one of the above three categories, his waste is subject to the Subtitle C regulations diagrammed in Figure 4.

Figure 4 is a flowchart which identifies the three categories of activities regulated under the Subtitle C rules, and the corresponding set of rules with which people in each of these categories must comply. It points out that all people who handle hazardous waste are either: (1) Generators of hazardous waste, (2) transporters of hazardous waste, (3) owners or operators of hazardous waste treatment, storage, or disposal facilities, or (4) a combination of the above. Figure 4 indicates that all of these people must notify EPA of their hazardous waste activities in accordance with the Section 3010 Notification Procedures (see 45 FR 12746 *et seq.*), and obtain an EPA identification number.

It should be noted that people handling wastes listed in Subpart D of Part 261 who have filed, or who intend to file an application to exempt their waste from regulation under the Subtitle C rules, must also comply with the notification requirements of section 3010.

If a person generates hazardous waste, Figure 4 indicates that he must comply with the Part 262 rules. If he transports it, he must comply with the Part 263 rules. The standards in both these Parts are designed to ensure, among other things, proper recordkeeping and reporting, the use of a manifest system to track shipments of hazardous waste, the use of proper labels and containers, and the delivery of the waste to a permitted treatment, storage, or disposal facility.

If a person owns or operates a facility which treats, stores, or disposes of hazardous waste, the standards with which he must comply depend on a number of factors. First of all, if the owner or operator of

a *storage* facility is also the person who generates the waste, and the waste is stored at the facility for less than 90 days for subsequent shipment off-site, then the person must comply with § 262.34 of the Part 262 rules.

All other owners or operators of treatment, storage, or disposal facilities must comply with either the Part 264 or the Part 265 rules. To determine with which of these sets of rules an owner or operator must comply, he must find out whether his facility qualifies for interim status. To qualify, the owner or operator must: (1) Have been treating, storing, or disposing of the hazardous waste, or commenced facility construction on or before October 21, 1976, (2) comply with the section 3010 notification requirements, and (3) apply for a permit under Part 270 of this chapter.

If the owner or operator has done all of the above, he qualifies for interim status, and he must comply with the Part 265 rules. These rules contain administrative requirements, monitoring and closure standards, and an abbreviated set of technical and closure and post-closure cost estimate requirements. The owner or operator must comply with these standards until final administrative disposition of his permit application is made. If a permit is issued to the owner or operator, he must then comply with the permit which will be based on the Part 264 rules.

If the owner or operator has not carried out the above three requirements, he does not qualify for interim status. Until he is issued a permit for his facility, the owner or operator must stop waste management operations (if any) at the facility, and send his hazardous waste (if any) to a facility whose owner or operator has interim status or to a storage facility following the Part 262 rules.

In order to apply for a permit, the owner or operator must comply with the procedures specified in Part 270 of this chapter.

It should be noted that the Agency will be periodically revising the rules depicted in Figures 3 and 4. All persons are encouraged to write to EPA to verify that the regulations which they are reading are up-to-date. To obtain this verification, contact: Solid Waste Information, U.S. Environmental Protection Agency, 26 West St. Clair Street, Cincinnati, Ohio 45268 (513) 684-5362.

FIGURE 1

DEFINITION OF A SOLID WASTE

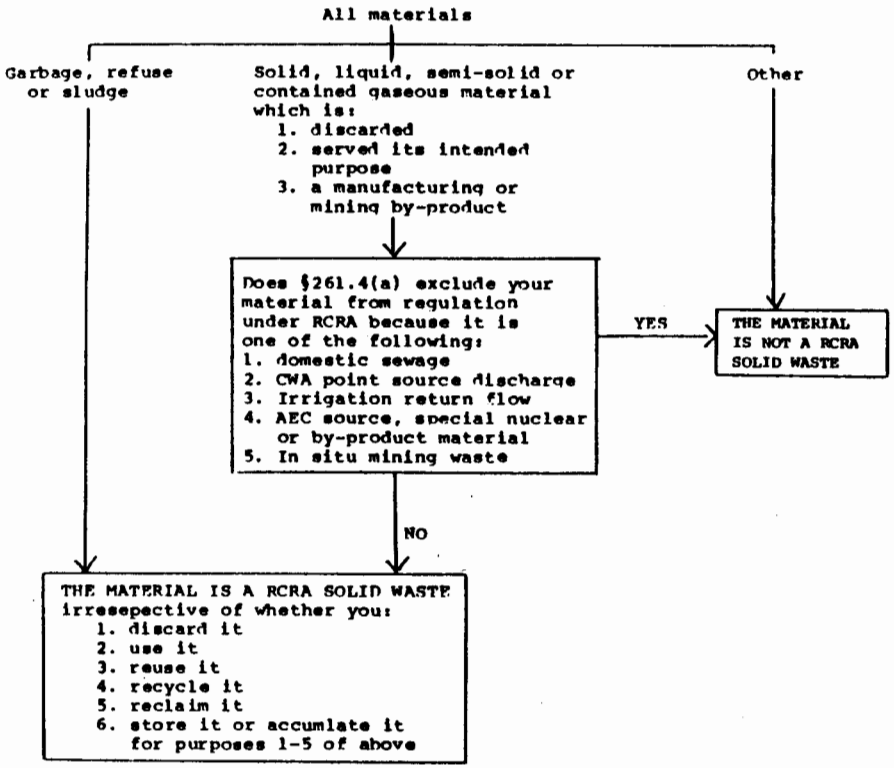

FIGURE 2

DEFINITION OF A HAZARDOUS WASTE

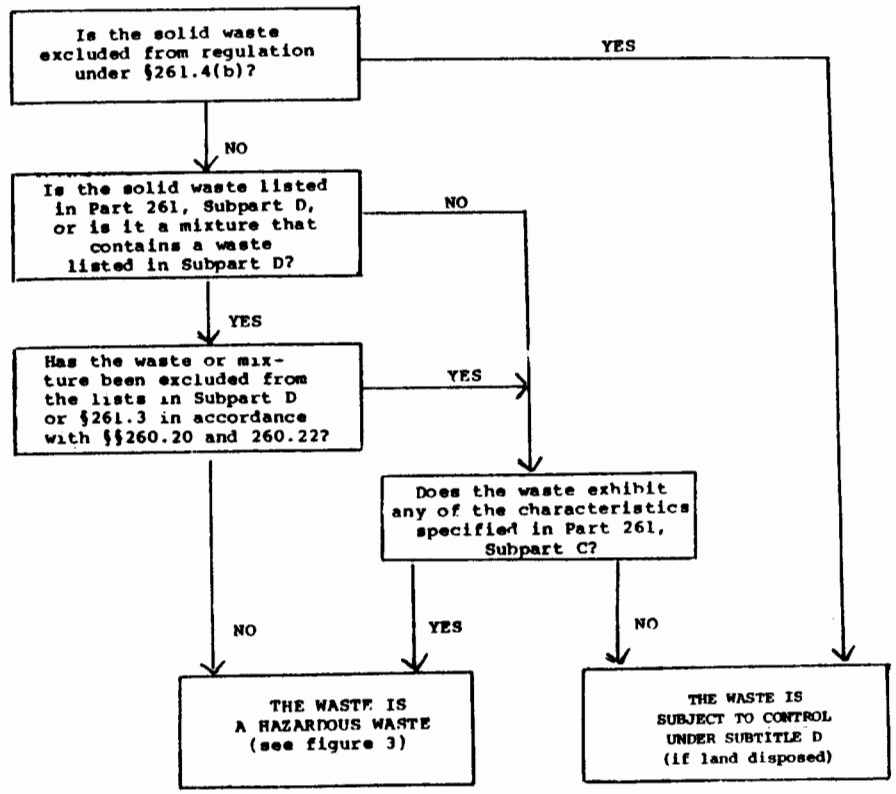

PART 261—IDENTIFICATION AND LISTING OF HAZARDOUS WASTE

Subpart A—General

Sec.
261.1 Purpose and scope.
261.2 Definition of solid waste.
261.3 Definition of hazardous waste.
261.4 Exclusions.
261.5 Special requirements for hazardous waste generated by conditionally exempt small quantity generators.
261.6 Requirements for recyclable materials.
261.7 Residues of hazardous waste in empty containers.

Subpart B—Criteria for Identifying the Characteristics of Hazardous Waste and for Listing Hazardous Wastes

261.10 Criteria for identifying the characteristics of hazardous waste.
261.11 Criteria for listing hazardous waste.

Subpart C—Characteristics of Hazardous Waste

261.20 General.
261.21 Characteristic of ignitability.
261.22 Characteristic of corrosivity.
261.23 Characteristic of reactivity.
261.24 Characteristic of EP toxicity.

Subpart D—Lists of Hazardous Wastes

261.30 General
261.31 Hazardous wastes from non-specific sources
261.32 Hazardous wastes from specific sources
261.33 Discarded commercial chemical products, off-specification species, container residues, and spill residues thereof.

Appendices

Appendix I—Representative Sampling Methods
Appendix II—EP Toxicity Test Procedures
Appendix III—Chemical Analysis Test Methods
Appendix IV—[Reserved for Radioactive Waste Test Methods]
Appendix V—[Reserved for Infectious Waste Treatment Specifications]
Appendix VI—[Reserved for Etiologic Agents]
Appendix VII—Basis for Listing Hazardous Waste
Appendix VIII—Hazardous Constituents
Appendix IX—Wastes Excluded Under §§ 260.20 and 260.22
Appendix X—Method of Analysis for Chorinated Dibenzo-p-Dioxins and -Dibenzofurans

Authority: 42 U.S.C. 6905, 6912(a), 6921, and 6922.

Source: 45 FR 33119, May 19, 1980, unless otherwise noted.

Subpart A—General

§ 261.1 Purpose and scope.

(a) This part identifies those solid wastes which are subject to regulation as hazardous wastes under Parts 262 through 265, 268, and Parts 270, 271, and 124 of this chapter and which are subject to the notification requirements of section 3010 of RCRA. In this part:

(1) Subpart A defines the terms "solid waste" and "hazardous waste", identifies those wastes which are excluded from regulation under Parts 262 through 266, 268 and 270 and establishes special management requirements for hazardous waste produced by conditionally exempt small quantity generators and hazardous waste which is recycled.

(2) Subpart B sets forth the criteria used by EPA to identify characteristics of hazardous waste and to list particular hazardous wastes.

(3) Subpart C identifies characteristics of hazardous waste.

(4) Subpart D lists particular hazardous wastes.

(b)(1) The definition of solid waste contained in this part applies only to wastes that also are hazardous for purposes of the regulations implementing Subtitle C of RCRA. For example, it does not apply to materials (such as non-hazardous scrap, paper, textiles, or rubber) that are not otherwise hazardous wastes and that are recycled.

(2) This part identifies only some of the materials which are solid wastes and hazardous wastes under sections 3007, 3013, and 7003 of RCRA. A material which is not defined as a solid waste in this part, or is not a hazardous waste identified or listed in this part, is still a solid waste and a hazardous waste for purposes of these sections if:

(i) In the case of sections 3007 and 3013, EPA has reason to believe that the material may be a solid waste within the meaning of section 1004(27) of RCRA and a hazardous waste within the meaning of section 1004(5) of RCRA; or

(ii) In the case of section 7003, the statutory elements are established.

(c) For the purposes of §§ 261.2 and 261.6:

(1) A "spent material" is any material that has been used and as a result of contamination can no longer serve the purpose for which it was produced without processing;

(2) "Sludge" has the same meaning used in § 260.10 of this chapter;

(3) A "by-product" is a material that is not one of the primary products of a production process and is not solely or separately produced by the production process. Examples are process residues such as slags or distillation column bottoms. The term does not include a co-product that is produced for the general public's use and is ordinarily used in the form it is produced by the process.

(4) A material is "reclaimed" if it is processed to recover a usable product, or if it is regenerated. Examples are recovery of lead values from spent batteries and regeneration of spent solvents.

(5) A material is "used or reused" if it is either:

(i) Employed as an ingredient (including use as an intermediate) in an industrial process to make a product (for example, distillation bottoms from one process used as feedstock in another process). However, a material will not satisfy this condition if distinct components of the material are recovered as separate end products (as when metals are recovered from metal-containing secondary materials); or

(ii) Employed in a particular function or application as an effective substitute for a commercial product (for example, spent pickle liquor used as phosphorous precipitant and sludge conditioner in wastewater treatment).

(6) "Scrap metal" is bits and pieces of metal parts (*e.g.*,) bars, turnings, rods, sheets, wire) or metal pieces that may be combined together with bolts or soldering (*e.g.*, radiators, scrap automobiles, railroad box cars), which when worn or superfluous can be recycled.

(7) A material is "recycled" if it is used, reused, or reclaimed.

(8) A material is "accumulated speculatively" if it is accumulated before being recycled. A material is not accumulated speculatively, however, if the person accumulating it can show that the material is potentially recyclable and has a feasible means of being recycled; and that—during the calendar year (commencing on January 1)—the amount of material that is recycled, or transferred to a different site for recycling, equals at least 75 percent by weight or volume of the amount of that material accumulated at the beginning of the period. In calculating the percentage of turnover, the 75 percent requirement is to be applied to each material of the same type (*e.g.*, slags from a single smelting process) that is recycled in the same way (*i.e.*, from which the same material is recovered or that is used in the same way). Materials accumulating in units that would be exempt from regulation under § 261.4(c) are not be included in making the calculation. (Materials that are already defined as solid wastes also are not to be included in making the calculation.) Materials are no longer in this category once they are removed from accumulation for recycling, however.

[45 FR 33119, May 19, 1980, as amended at 48 FR 14293, Apr. 1, 1983; 50 FR 663, Jan. 4, 1985; 51 FR 10174, Mar. 24, 1986; 51 FR 40636, Nov. 7, 1986]

§ 261.2 Definition of solid waste.

(a)(1) A *solid waste* is any discarded material that is not excluded by § 261.4(a) or that is not excluded by variance granted under §§ 260.30 and 260.31.

(2) A *discarded material* is any material which is:

(i) *Abandoned*, as explained in paragraph (b) of this section; or

(ii) *Recycled*, as explained in paragraph (c) of this section; or

(iii) Considered *inherently waste-like*, as explained in paragraph (d) of this section.

(b) Materials are solid waste if they are *abandoned* by being:

(1) Disposed of; or

(2) Burned or incinerated; or

(3) Accumulated, stored, or treated (but not recycled) before or in lieu of being abandoned by being disposed of, burned, or incinerated.

(c) Materials are solid wastes if they are *recycled*—or accumulated, stored, or treated before recycling—as specified in paragraphs (c)(1) through (4) of this section.

(1) *Used in a manner constituting disposal.* (i) Materials noted with a "*" in Column 1 of Table I are solid wastes when they are:

(A) Applied to or placed on the land in a manner that constitutes disposal; or

(B) Used to produce products that are applied to or placed on the land or are otherwise contained in products that are applied to or placed on the land (in which cases the product itself remains a solid waste).

(ii) However, commercial chemical products listed in § 261.33 are not solid wastes if they are applied to the land and that is their ordinary manner of use.

(2) *Burning for energy recovery.* (i) Materials noted with a "*" in column 2 of Table 1 are solid wastes when they are:

(A) Burned to recover energy;

(B) Used to produce a fuel or are otherwise contained in fuels (in which cases the fuel itself remains a solid waste).

(ii) However, commercial chemical products listed in § 261.33 are not solid wastes if they are themselves fuels.

(3) *Reclaimed.* Materials noted with a "*" in column 3 of Table 1 are solid wastes when reclaimed.

(4) *Accumulated speculatively.* Materials noted with a "*" in column 4 of Table 1 are solid wastes when accumulated speculatively.

TABLE 1

	Use constituting disposal (§ 261.2(c)(1)) (1)	Energy recovery/fuel (§ 261.2(c)(2)) (2)	Reclamation (§ 261.2(c)(3)) (3)	Speculative accumulation (§ 261.2(c)(4)) (4)
Spent Materials	(*)	(*)	(*)	(*)
Sludges (listed in 40 CFR Part 261.31 or 261.32)	(*)	(*)	(*)	(*)
Sludges exhibiting a characteristic of hazardous waste	(*)	(*)		(*)
By-products (listed in 40 CFR Part 261.31 or 261.32)	(*)	(*)	(*)	(*)
By-products exhibiting a characteristic of hazardous waste	(*)	(*)		(*)
Commercial chemical products listed in 40 CFR 261.33	(*)	(*)		
Scrap metal	(*)	(*)	(*)	(*)

Note: The terms "spent materials", "sludges", "by-products," and "scrap metal" are defined in § 261.1.

(d) *Inherently waste-like materials.* The following materials are solid wastes when they are recycled in any manner:

(1) Hazardous Waste Nos. F020, F021 (unless used as an ingredient to make a product at the site of generation), F022, F023, F026, and F028.

(2) The Administrator will use the following criteria to add wastes to that list:

(i)(A) The materials are ordinarily disposed of, burned, or incinerated; or

(B) The materials contain toxic constituents listed in Appendix VIII of Part 261 and these constituents are not ordinarily found in raw materials or products for which the materials substitute (or are found in raw materials or products in smaller concentrations) and are not used or reused during the recycling process; and

(ii) The material may pose a substantial hazard to human health and the environment when recycled.

(e) *Materials that are not solid waste when recycled.* (1) Materials are not solid wastes when they can be shown to be recycled by being:

(i) Used or reused as ingredients in an industrial process to make a product, provided the materials are not being reclaimed; or

(ii) Used or reused as effective substitutes for commercial products; or

(iii) Returned to the original process from which they are generated, without first being reclaimed. The material must be returned as a substitute for raw material feedstock, and the process must use raw materials as principal feedstocks.

(2) The following materials are solid wastes, even if the recycling involves use, reuse, or return to the original process (described in paragraphs (e)(1)(i) through (iii) of this section):

(i) Materials used in a manner constituting disposal, or used to produce products that are applied to the land; or

(ii) Materials burned for energy recovery, used to produce a fuel, or contained in fuels; or

(iii) Materials accumulated speculatively; or

(iv) Materials listed in paragraph (d)(1) of this section.

(f) *Documentation of claims that materials are not solid wastes or are conditionally exempt from regulation.* Respondents in actions to enforce regulations implementing Subtitle C of RCRA who raise a claim that a certain material is not a solid waste, or is conditionally exempt from regulation, must demonstrate that there is a known market or disposition for the material, and that they meet the terms of the exclusion or exemption. In doing so, they must provide appropriate documentation (such as contracts showing that a second person uses the material as an ingredient in a production process) to demonstrate that the material is not a waste, or is exempt from regulation. In addition, owners or operators of facilities claiming that they actually are recycling materials must show that they have the necessary equipment to do so.

[50 FR 664, Jan. 4, 1985, as amended at 50 FR 33542, Aug. 20, 1985]

§ 261.3 Definition of hazardous waste.

(a) A solid waste, as defined in § 261.2, is a hazardous waste if:

(1) It is not excluded from regulation as a hazardous waste under § 261.4(b); and

(2) It meets any of the following criteria:

(i) It exhibits any of the characteristics of hazardous waste identified in Subpart C.

(ii) It is listed in Subpart D and has not been excluded from the lists in Subpart D under §§ 260.20 and 260.22 of this chapter.

(iii) It is a mixture of a solid waste and a hazardous waste that is listed in Subpart D solely because it exhibits one or more of the characteristics of hazardous waste identified in Subpart C, unless the resultant mixture no longer exhibits any characteristic of hazardous waste identified in Subpart C.

(iv) It is a mixture of solid waste and one or more hazardous wastes listed in Subpart D and has not been excluded from this paragraph under §§ 260.20 and 260.22 of this chapter; however, the following mixtures of solid wastes and hazardous wastes listed in Subpart D are not hazardous wastes (except by application of paragraph (a)(2) (i) or (ii) of this section) if the generator can demonstrate that the mixture consists of wastewater the discharge of which is subject to regulation under either section 402 or section 307(b) of the Clean Water Act (including wastewater at facilities which have eliminated the discharge of wastewater) and:

(A) One or more of the following spent solvents listed in § 261.31—carbon tetrachloride, tetrachloroethylene, trichoroethylene—*Provided, That the maximum total weekly usage of these solvents (other than the amounts that can be demonstrated not to be discharged to wastewater) divided by the average weekly flow of wastewater into the headworks of the facility's wastewater treatment or pretreatment system does not exceed 1 part per million; or*

(B) One or more of the following spent solvents listed in § 261.31—methylene chloride, 1,1,1-trichloroethane, chlorobenzene, o-dichlorobenzene, cresols, cresylic acid, nitrobenzene, toluene, methyl ethyl ketone, carbon disulfide, isobutanol, pyridine, spent chlorofluorocarbon solvents—provided that the maximum total weekly usage of these solvents (other than the amounts that can be demonstrated not to be discharged to wastewater) divid-

ed by the average weekly flow of wastewater into the headworks of the facility's wastewater treatment or pretreatment system does not exceed 25 parts per million; or

(C) One of the following wastes listed in § 261.32—heat exchanger bundle cleaning sludge from the petroleum refining industry (EPA Hazardous Waste No. K050); or

(D) A discarded commercial chemical product, or chemical intermediate listed in § 261.33, arising from *de minimis* losses of these materials from manufacturing operations in which these materials are used as raw materials or are produced in the manufacturing process. For purposes of this subparagraph, *"de minimis"* losses include those from normal material handling operations (e.g. spills from the unloading or transfer of materials from bins or other containers, leaks from pipes, valves or other devices used to transfer materials); minor leaks of process equipment, storage tanks or containers; leaks from well-maintained pump packings and seals; sample purgings; relief device discharges; discharges from safety showers and rinsing and cleaning of personal safety equipment; and rinsate from empty containers or from containers that are rendered empty by that rinsing; or

(E) Wastewater resulting from laboratory operations containing toxic (T) wastes listed in Subpart D, *Provided, That the annualized average flow of laboratory wastewater does not exceed one percent of total wastewater flow into the headworks of the facility's wastewater treatment or pre-treatment system, or provided the wastes, combined annualized average concentration does not exceed one part per million in the headworks of the facility's wastewater treatment or pre-treatment facility. Toxic (T) wastes used in laboratories that are demonstrated not to be discharged to wastewater are not to be included in this calculation.*

(b) A solid waste which is not excluded from regulation under paragraph (a)(1) of this section becomes a hazardous waste when any of the following events occur:

(1) In the case of a waste listed in Subpart D, when the waste first meets the listing description set forth in Subpart D.

(2) In the case of a mixture of solid waste and one or more listed hazardous wastes, when a hazardous waste listed in Subpart D is first added to the solid waste.

(3) In the case of any other waste (including a waste mixture), when the waste exhibits any of the characteristics identified in Subpart C.

(c) Unless and until it meets the criteria of paragraph (d):

(1) A hazardous waste will remain a hazardous waste.

(2)(i) Except as otherwise provided in paragraph (c)(2)(ii) of this section, any solid waste generated from the treatment, storage, or disposal of a hazardous waste, including any sludge, spill residue, ash, emission control dust, or leachate (but not including precipitation run-off) is a hazardous waste. (However, materials that are reclaimed from solid wastes and that are used beneficially are not solid wastes and hence are not hazardous wastes under this provision unless the reclaimed material is burned for energy recovery or used in a manner constituting disposal.)

(ii) The following solid wastes are not hazardous even though they are generated from the treatment, storage, or disposal of a hazardous waste, unless they exhibit one or more of the characteristics of hazardous waste: (A) Waste pickle liquor sludge generated by lime stabilization of spent pickle liquor from the iron and steel industry (SIC Codes 331 and 332).

(B) Waste from burning any of the materials exempted from regulation by § 261.6(a)(3) (v) through (ix).

(d) Any solid waste described in paragraph (c) of this section is not a hazardous waste if it meets the following criteria:

(1) In the case of any solid waste, it does not exhibit any of the characteristics of hazardous waste identified in Subpart C.

(2) In the case of a waste which is a listed waste under Subpart D, contains a waste listed under Subpart D or is derived from a waste listed in Subpart D, it also has been excluded from paragraph (c) under §§ 260.20 and 260.22 of this chapter.

[45 FR 33119, May 19, 1980, as amended at 46 FR 56588, Nov. 17, 1981; 50 FR 14219, Apr. 11, 1985; 50 FR 49202, Nov. 29, 1985; 52 FR 11821, Apr. 13, 1987]

§ 261.4 Exclusions.

(a) *Materials which are not solid wastes.* The following materials are not solid wastes for the purpose of this part:

(1)(i) Domestic sewage; and

(ii) Any mixture of domestic sewage and other wastes that passes through a sewer system to a publicly-owned treatment works for treatment. "Domestic sewage" means untreated sanitary wastes that pass through a sewer system.

(2) Industrial wastewater discharges that are point source discharges subject to regulation under section 402 of the Clean Water Act, as amended.

[*Comment:* This exclusion applies only to the actual point source discharge. It does not exclude industrial wastewaters while they are being collected, stored or treated before discharge, nor does it exclude sludges that are generated by industrial wastewater treatment.]

(3) Irrigation return flows.

(4) Source, special nuclear or byproduct material as defined by the Atomic Energy Act of 1954, as amended, 42 U.S.C. 2011 *et seq.*

(5) Materials subjected to in-situ mining techniques which are not removed from the ground as part of the extraction process.

(6) Pulping liquors (*i.e.*, black liquor) that are reclaimed in a pulping liquor recovery furnace and then reused in the pulping process, unless it is accumulated speculatively as defined in § 261.1(c) of this chapter.

(7) Spent sulfuric acid used to produce virgin sulfuric acid, unless it is accumulated speculatively as defined in § 261.1(c) of this chapter.

(8) Secondary materials that are reclaimed and returned to the original process or processes in which they were generated where they are reused in the production process provided:

(i) Only tank storage is involved, and the entire process through completion of reclamation is closed by being entirely connected with pipes or other comparable enclosed means of conveyance;

(ii) Reclamation does not involve controlled flame combustion (such as occurs in boilers, industrial furnaces, or incinerators);

(iii) The secondary materials are never accumulated in such tanks for over twelve months without being reclaimed; and

(iv) The reclaimed material is not used to produce a fuel, or used to produce products that are used in a manner constituting disposal.

(b) *Solid wastes which are not hazardous wastes.* The following solid wastes are not hazardous wastes:

(1) Household waste, including household waste that has been collected, transported, stored, treated, disposed, recovered (e.g., refuse-derived fuel) or reused. "Household waste" means any material (including garbage, trash and sanitary wastes in septic tanks) derived from households (including single and multiple residences, hotels and motels, bunkhouses, ranger stations, crew quarters, campgrounds, picnic grounds and day-use recreation areas). A resource recovery facility managing municipal solid waste shall not be deemed to be treating, storing, disposing of, or otherwise managing hazardous wastes for the purposes of regulation under this subtitle, if such facility:

(i) Receives and burns only

(A) Household waste (from single and multiple dwellings, hotels, motels, and other residential sources) and

(B) Solid waste from commercial or industrial sources that does not contain hazardous waste; and

(ii) Such facility does not accept hazardous wastes and the owner or operator of such facility has established contractual requirements or other appropriate notification or inspection procedures to assure that hazardous wastes are not received at or burned in such facility.

(2) Solid wastes generated by any of the following and which are returned to the soils as fertilizers:

(i) The growing and harvesting of agricultural crops.

(ii) The raising of animals, including animal manures.

(3) Mining overburden returned to the mine site.

(4) Fly ash waste, bottom ash waste, slag waste, and flue gas emission control waste generated primarily from the combustion of coal or other fossil fuels.

(5) Drilling fluids, produced waters, and other wastes associated with the exploration, development, or production of crude oil, natural gas or geothermal energy.

(6)(i) Wastes which fail the test for the characteristic of EP toxicity because chromium is present or are listed in Subpart D due to the presence of chromium, which do not fail the test for the characteristic of EP toxicity for any other constituent or are not listed due to the presence of any other constituent, and which do not fail the text for any other characteristic, if it is shown by a waste generator or by waste generators that:

(A) The chromium in the waste is exclusively (or nearly exclusively) trivalent chromium; and

(B) The waste is generated from an industrial process which uses trivalent chromium exlcusively (or nearly exclusively) and the process does not generate hexavalent chromium; and

(C) The waste is typically and frequently managed in non-oxidizing environments.

(ii) Specific wastes which meet the standard in paragraphs (b)(6)(i)(A), (B) and (C) (so long as they do not fail the test for the charactristic of EP toxicity, and do not fail the test for any other characteristic) are:

(A) Chrome (blue) trimmings generated by the following subcategories of the leather tanning and finishing industry; hair pulp/chrome tan/retan/wet finish; hair save/chrome tan/retan/wet finish; retan/wet finish; no beamhouse; through-the-blue; and shearling.

(B) Chrome (blue) shavings generated by the following subcategories of the leather tanning and finishing industry: Hair pulp/chrome tan/retan/wet finish; hair save/chrome tan/retan/wet finish; retan/wet finish; no beamhouse; through-the-blue; and shearling.

(C) Buffing dust generated by the following subcategories of the leather tanning and finishing industry; hair pulp/chrome tan/retan/wet finish; hair save/chrome tan/retan/wet finish; retan/wet finish; no beamhouse; through-the-blue.

(D) Sewer screenings generated by the following subcategories of the leather tanning and finishing industry: Hair pulp/crome tan/retan/wet finish; hair save/chrome tan/retan/wet finish; retan/wet finish; no beamhouse; through-the-blue; and shearling.

(E) Wastewater treatment sludges generated by the following subcategories of the leather tanning and finishing industry: Hair pulp/chrome tan/retan/wet finish; hair save/chrome tan/retan/wet finish; retan/wet finish; no beamhouse; through-the-blue; and shearling.

(F) Wastewater treatment sludes generated by the following subcategories of the leather tanning and finishing industry: Hair pulp/chrome tan/retan/wet finish; hair save/chrome-tan/retan/wet finish; and through-the-blue.

(G) Waste scrap leather from the leather tanning industry, the shoe manufacturing industry, and other leather product manufacturing industries.

(H) Wastewater treatment sludges from the production of TiO_2 pigment using chromium-bearing ores by the chloride process.

(7) Solid waste from the extraction, beneficiation and processing of ores and minerals (including coal), including phosphate rock and overburden from the mining of uranium ore.

(8) Cement kiln dust waste.

(9) Solid waste which consists of discarded wood or wood products which fails the test for the characteristic of EP toxicity and which is not a hazardous waste for any other reason if the waste is generated by persons who utilize the arsenical-treated wood and wood products for these materials' intended end use.

(c) Hazardous wastes which are exempted from certain regulations. A hazardous waste which is generated in a product or raw material storage tank, a product or raw material transport vehicle or vessel, a product or raw material pipeline, or in a manufacturing process unit or an associated non-waste-treatment-manufacturing unit, is not subject to regulation under Parts 262 through 265, 268, 270, 271 and 124 of this chapter or to the notification requirements of section 3010 of RCRA until it exits the unit in which it was generated, unless the unit is a surface impoundment, or unless the hazardous waste remains in the unit more than 90 days after the unit ceases to be operated for manufacturing, or for storage or transportation of product or raw materials.

(d) *Samples.* (1) Except as provided in paragraph (d)(2) of this section, a sample of solid waste or a sample of water, soil, or air, which is collected for the sole purpose of testing to determine its characteristics or composition, is not subject to any requirements of this part or Parts 262 through 268 or Part 270 or Part 124 of this chapter or to the notification requirements of section 3010 of RCRA, when:

(i) The sample is being transported to a laboratory for the purpose of testing; or

(ii) The sample is being transported back to the sample collector after testing; or

(iii) The sample is being stored by the sample collector before transport to a laboratory for testing; or

(iv) The sample is being stored in a laboratory before testing; or

(v) The sample is being stored in a laboratory after testing but before it is returned to the sample collector; or

(vi) The sample is being stored temporarily in the laboratory after testing for a specific purpose (for example, until conclusion of a court case or enforcement action where further testing of the sample may be necessary).

(2) In order to qualify for the exemption in paragraphs (d)(1) (i) and (ii) of this section, a sample collector shipping samples to a laboratory and a laboratory returning samples to a sample collector must:

(i) Comply with U.S. Department of Transportation (DOT), U.S. Postal Service (USPS), or any other applicable shipping requirements; or

(ii) Comply with the following requirements if the sample collector determines that DOT, USPS, or other shipping requirements do not apply to the shipment of the sample:

(A) Assure that the following information accompanies the sample:

(*1*) The sample collector's name, mailing address, and telephone number;

(*2*) The laboratory's name, mailing address, and telephone number;

(*3*) The quantity of the sample;

(*4*) The date of shipment; and

(*5*) A description of the sample.

(B) Package the sample so that it does not leak, spill, or vaporize from its packaging.

(3) This exemption does not apply if the laboratory determines that the waste is hazardous but the laboratory is no longer meeting any of the conditions stated in paragraph (d)(1) of this section.

[45 FR 33119, May 19, 1980]

EDITORIAL NOTE: For FEDERAL REGISTER citations affecting § 261.4, see the List of CFR Sections Affected in the Finding Aids section of this volume.

§ 261.5 Special requirements for hazardous waste generated by conditionally exempt small quantity generators.

(a) A generator is a conditionally exempt small quantity generator in a calendar month if he generates no more than 100 kilograms of hazardous waste in that month.

(b) Except for those wastes identified in paragraphs (e), (f), (g), and (j) of this section, a conditionally exempt small quantity generator's hazardous wastes are not subject to regulation under Parts 262 through 266, 268, and Parts 270 and 124 of this chapter, and the notification requirements of section 3010 of RCRA, provided the generator complies with the requirements of paragraphs (f), (g), and (j) of this section.

(c) Hazardous waste that is not subject to regulation or that is subject only to § 262.11, § 262.12, § 262.40(c), and § 262.41 is not included in the quantity determinations of this part and Parts 262 through 266, 268, and 270 and is not subject to any of the requirements of those parts. Hazardous waste that is subject to the requirements of § 261.6 (b) and (c) and Subparts C, D, and F of Part 266 is included in the quantity determination of this part and is subject to the require-

ments of Parts 262 through 266 and 270.

(d) In determining the quantity of hazardous waste generated, a generator need not include:

(1) Hazardous waste when it is removed from on-site storage; or

(2) Hazardous waste produced by on-site treatment (including reclamation) of his hazardous waste, so long as the hazardous waste that is treated was counted once; or

(3) Spent materials that are generated, reclaimed, and subsequently reused on-site, so long as such spent materials have been counted once.

(e) If a generator generates acute hazardous waste in a calendar month in quantities greater than set forth below, all quantities of that acute hazardous waste are subject to full regulation under Parts 262 through 266, 268, and Parts 270 and 124 of this chapter, and the notification requirements of section 3010 of RCRA:

(1) A total of one kilogram of acute hazardous wastes listed in §§ 261.31, 261.32, or 261.33(e).

(2) A total of 100 kilograms of any residue or contaminated soil, waste, or other debris resulting from the clean-up of a spill, into or on any land or water, of any acute hazardous wastes listed in §§ 261.31, 261.32, or 261.33(e).

(f) In order for acute hazardous wastes generated by a generator of acute hazardous wastes in quantities equal to or less than those set forth in paragraph (e)(1) or (2) of this section to be excluded from full regulation under this section, the generator must comply with the following requirements:

(1) Section 262.11 of this chapter;

(2) The generator may accumulate acute hazardous waste on-site. If he accumulates at any time acute hazardous wastes in quantities greater than those set forth in paragraph (e)(1) or (2) of this section, all of those accumulated wastes are subject to regulation under Parts 262 through 266, 268, and Parts 270 and 124 of this chapter, and the applicable notification requirements of section 3010 of RCRA. The time period of § 262.34(d) for accumulation of wastes on-site begins when the accumulated wastes exceed the applicable exclusion limit;

(3) A conditionally exempt small quantity generator may either treat or dispose of his acute hazardous waste in an on-site facility or ensure delivery to an off-site treatment, storage or disposal facility, either of which, if located in the U.S., is:

(i) Permitted under Part 270 of this chapter;

(ii) In interim status under Parts 270 and 265 of this chapter;

(iii) Authorized to manage hazardous waste by a State with a hazardous waste management program approved under Part 271 of this chapter;

(iv) Permitted, licensed, or registered by a State to manage municipal or industrial solid waste; or

(v) A facility which:

(A) Beneficially uses or reuses, or legitimately recycles or reclaims its waste; or

(B) Treats its waste prior to beneficial use or reuse, or legitimate recycling or reclamation.

(g) In order for hazardous waste generated by a conditionally exempt small quantity generator in quantities of less than 100 kilograms of hazardous waste during a calendar month to be excluded from full regulation under this section, the generator must comply with the following requirements:

(1) Section 262.11 of this chapter;

(2) The conditionally exempt small quantity generator may accumulate hazardous waste on-site. If he accumulates at any time more than a total of 1000 kilograms of his hazardous wastes, all of those accumulated wastes are subject to regulation under the special provisions of Part 262 applicable to generators of between 100 kg and 1000 kg of hazardous waste in a calendar month as well as the requirements of Parts 263 through 266, 268, and Parts 270 and 124 of this chapter, and the applicable notification requirements of section 3010 of RCRA. The time period of § 262.34(d) for accumulation of wastes on-site begins for a conditionally exempt small quantity generator when the accumulated wastes exceed 1000 kilograms;

(3) A conditionally exempt small quantity generator may either treat or dispose of his hazardous waste in an on-site facility or ensure delivery to an off-site treatment, storage or disposal facility, either of which, if located in the U.S., is:

(i) Permitted under Part 270 of this chapter;

(ii) In interim status under Parts 270 and 265 of this chapter;

(iii) Authorized to manage hazardous waste by a State with a hazardous waste management program approved under Part 271 of this chapter;

(iv) Permitted, licensed, or registered by a State to manage municipal or industrial solid waste; or

(v) A facility which:

(A) Beneficially uses or reuses, or legitimately recycles or reclaims its waste; or

(B) Treats its waste prior to beneficial use or reuse, or legitimate recycling or reclamation.

(h) Hazardous waste subject to the reduced requirements of this section may be mixed with non-hazardous waste and remain subject to these reduced requirements even though the resultant mixture exceeds the quantity limitations identified in this section, unless the mixture meets any of the characteristics of hazardous waste identified in Subpart C.

(i) If any person mixes a solid waste with a hazardous waste that exceeds a quantity exclusion level of this section, the mixture is subject to full regulation.

(j) If a conditionally exempt small quantity generator's wastes are mixed with used oil, the mixture is subject to Subpart E of Part 266 of this chapter if it is destined to be burned for energy recovery. Any material produced from such a mixture by processing, blending, or other treatment is also so regulated if it is destined to be burned for energy recovery.

[51 FR 10174, Mar. 24, 1986, as amended at 51 FR 28682, Aug. 8, 1986; 51 FR 40637, Nov. 7, 1986]

§ 261.6 Requirements for recyclable materials.

(a)(1) Hazardous wastes that are recycled are subject to the requirements for generators, transporters, and storage facilities of paragraphs (b) and (c) of this section, except for the materials listed in paragraphs (a)(2) and (a)(3) of this section. Hazardous wastes that are recycled will be known as "recyclable materials."

(2) The following recyclable materials are not subject to the requirements of this section but are regulated under Subparts C through G of Part 266 of this chapter and all applicable provisions in Parts 270 and 124 of this chapter:

(i) Recyclable materials used in a manner constituting disposal (Subpart C);

(ii) Hazardous wastes burned for energy recovery in boilers and industrial furnaces that are not regulated under Subpart O of Part 264 or 265 of this chapter (Subpart D);

(iii) Used oil that exhibits one or more of the characteristics of hazardous waste and is burned for energy recovery in boilers and industrial furnaces that are not regulated under Subpart O of Part 264 or 265 of this chapter (Subpart E);

(iv) Recyclable materials from which precious metals are reclaimed (Subpart F);

(v) Spent lead-acid batteries that are being reclaimed (Subpart G).

(3) The following recyclable materials are not subject to regulation under Parts 262 through Parts 266 or Parts 268, 270 or 124 of this chapter, and are not subject to the notification requirements of section 3010 of RCRA:

(i) Industrial ethyl alcohol that is reclaimed except that, unless provided otherwise in an international agreement as specified in § 262.58:

(A) A person initiating a shipment for reclamation in a foreign country, and any intermediary arranging for the shipment, must comply with the requirements applicable to a primary exporter in §§ 262.53, 262.56 (a)(1)-(4), (6), and (b), and 262.57, export such materials only upon consent of the receiving country and in conformance with the EPA Acknowledgment of Consent as defined in Subpart E of Part 262, and provide a copy of the EPA Acknowledgment of Consent to the shipment to the transporter transporting the shipment for export;

(B) Transporters transporting a shipment for export may not accept a shipment if he knows the shipment does not conform to the EPA Acknowledgment of Consent, must ensure that

a copy of the EPA Acknowledgment of Consent accompanies the shipment and must ensure that it is delivered to the facility designated by the person initiating the shipment.

(ii) Used batteries (or used battery cells) returned to a battery manufacturer for regeneration;

(iii) Used oil that exhibits one or more of the characteristics of hazardous waste but is recycled in some other manner than being burned for energy recovery;

(iv) Scrap metal;

(v) Fuels produced from the refining of oil-bearing hazardous wastes along with normal process streams at a petroleum refining facility if such wastes result from normal petroleum refining, production, and transportation practices;

(vi) Oil reclaimed from hazardous waste resulting from normal petroleum refining, production, and transportation practices, which oil is to be refined along with normal process streams at a petroleum refining facility;

(vii) Coke and coal tar from the iron and steel industry that contains EPA Hazardous Waste No. K087 (Decanter tank tar sludge from coking operations) from the iron and steel production process;

(viii)(A) Hazardous waste fuel produced from oil-bearing hazardous wastes from petroleum refining, production, or transportation practices, or produced from oil reclaimed from such hazardous wastes, where such hazardous wastes are reintroduced into a process that does not use distillation or does not produce products from crude oil so long as the resulting fuel meets the used oil specification under § 266.40(e) of this chapter and so long as no other hazardous wastes are used to produce the hazardous waste fuel;

(B) Hazardous waste fuel produced from oil-bearing hazardous waste from petroleum refining production, and transportation practices, where such hazardous wastes are reintroduced into a refining process after a point at which contaminants are removed, so long as the fuel meets the used oil fuel specification under § 266.40(e) of this chapter; and

(C) Oil reclaimed from oil-bearing hazardous wastes from petroleum refining, production, and transportation practices, which reclaimed oil is burned as a fuel without reintroduction to a refining process, so long as the reclaimed oil meets the used oil fuel specification under § 266.40(e) of this chapter; and

(ix) Petroleum coke produced from petroleum refinery hazardous wastes containing oil at the same facility at which such wastes were generated, unless the resulting coke product exceeds one or more of the characteristics of hazardous waste in Part 261, Subpart C.

(b) Generators and transporters of recyclable materials are subject to the applicable requirements of Parts 262 and 263 of this chapter and the notification requirements under section 3010 of RCRA, except as provided in paragraph (a) of this section.

(c)(1) Owners or operators of facilities that store recyclable materials before they are recycled are regulated under all applicable provisions of Subparts A through L of Parts 264 and 265, and under Parts 124, 266, 268, and 270 of this Chapter and the notification requirements under section 3010 of RCRA, except as provided in paragraph (a) of this section. (The recycling process itself is exempt from regulation.)

(2) Owners or operators of facilities that recycle recyclable materials without storing them before they are recycled are subject to the following requirements, except as provided in paragraph (a) of this section:

(i) Notification requirements under section 3010 of RCRA;

(ii) Sections 265.71 and 265.72 (dealing with the use of the manifest and manifest discrepancies) of this chapter.

[50 FR 49203, Nov. 29, 1985, as amended at 51 FR 28682, Aug. 8, 1986; 51 FR 40637, Nov. 7, 1986; 52 FR 11821, Apr. 13, 1987]

§ 261.7 Residues of hazardous waste in empty containers.

(a)(1) Any hazardous waste remaining in either (i) an empty container or (ii) an inner liner removed from an empty container, as defined in paragraph (b) of this section, is not subject to regulation under Parts 261 through 265, or Part 268, 270 or 124 of this chapter or to the notification requirements of section 3010 of RCRA.

(2) Any hazardous waste in either (i) a container that is not empty or (ii) an inner liner removed from a container that is not empty, as defined in paragraph (b) of this section, is subject to regulation under Parts 261 through 265, and Parts 268, 270 and 124 of this chapter and to the notification requirements of section 3010 of RCRA.

(b)(1) A container or an inner liner removed from a container that has held any hazardous waste, except a waste that is a compressed gas or that is identified as an acute hazardous waste listed in §§ 261.31, 261.32, or 261.33(e) of this chapter is empty if:

(i) All wastes have been removed that can be removed using the practices commonly employed to remove materials from that type of container, *e.g.*, pouring, pumping, and aspirating, *and*

(ii) No more than 2.5 centimeters (one inch) of residue remain on the bottom of the container or inner liner, *or*

(iii)(A) No more than 3 percent by weight of the total capacity of the container remains in the container or inner liner if the container is less than or equal to 110 gallons in size, or

(B) No more than 0.3 percent by weight of the total capacity of the container remains in the container or inner liner if the container is greater than 110 gallons in size.

(2) A container that has held a hazardous waste that is a compressed gas is empty when the pressure in the container approaches atmospheric.

(3) A container or an inner liner removed from a container that has held an acute hazardous waste listed in §§ 261.31, 261.32, or 261.33(e) is empty if:

(i) The container or inner liner has been triple rinsed using a solvent capable of removing the commercial chemical product or manufacturing chemical intermediate;

(ii) The container or inner liner has been cleaned by another method that has been shown in the scientific literature, or by tests conducted by the generator, to achieve equivalent removal; or

(iii) In the case of a container, the inner liner that prevented contact of the commercial chemical product or manufacturing chemical intermediate with the container, has been removed.

[45 FR 78529, Nov. 25, 1980, as amended at 47 FR 36097, Aug. 18, 1982; 48 FR 14294, Apr. 1, 1983; 50 FR 1999, Jan. 14, 1985; 51 FR 40637, Nov. 7, 1986]

Subpart B—Criteria for Identifying the Characteristics of Hazardous Waste and for Listing Hazardous Waste

§ 261.10 Criteria for identifying the characteristics of hazardous waste.

(a) The Administrator shall identify and define a characteristic of hazardous waste in Subpart C only upon determining that:

(1) A solid waste that exhibits the characteristic may:

(i) Cause, or significantly contribute to, an increase in mortality or an increase in serious irreversible, or incapacitating reversible, illness; or

(ii) Pose a substantial present or potential hazard to human health or the environment when it is improperly treated, stored, transported, disposed of or otherwise managed; and

(2) The characteristic can be:

(i) Measured by an available standardized test method which is reasonably within the capability of generators of solid waste or private sector laboratories that are available to serve generators of solid waste; or

(ii) Reasonably detected by generators of solid waste through their knowledge of their waste.

§ 261.11 Criteria for listing hazardous waste.

(a) The Administrator shall list a solid waste as a hazardous waste only upon determining that the solid waste meets one of the following criteria:

(1) It exhibits any of the characteristics of hazardous waste identified in Subpart C.

(2) It has been found to be fatal to humans in low doses or, in the absence of data on human toxicity, it has been shown in studies to have an oral LD 50

toxicity (rat) of less than 50 milligrams per kilogram, an inhalation LC 50 toxicity (rat) of less than 2 milligrams per liter, or a dermal LD 50 toxicity (rabbit) of less than 200 milligrams per kilogram or is otherwise capable of causing or significantly contributing to an increase in serious irreversible, or incapacitating reversible, illness. (Waste listed in accordance with these criteria will be designated Acute Hazardous Waste.)

(3) It contains any of the toxic constituents listed in Appendix VIII unless, after considering any of the following factors, the Administrator concludes that the waste is not capable of posing a substantial present or potential hazard to human health or the environment when improperly treated, stored, transported or disposed of, or otherwise managed:

(i) The nature of the toxicity presented by the constituent.

(ii) The concentration of the constituent in the waste.

(iii) The potential of the constituent or any toxic degradation product of the constituent to migrate from the waste into the environment under the types of improper management considered in paragraph (a)(3)(vii) of this section.

(iv) The persistence of the constituent or any toxic degradation product of the constituent.

(v) The potential for the constituent or any toxic degradation product of the constituent to degrade into nonharmful constituents and the rate of degradation.

(vi) The degree to which the constituent or any degradation product of the constituent bioaccumulates in ecosystems.

(vii) The plausible types of improper management to which the waste could be subjected.

(viii) The quantities of the waste generated at individual generation sites or on a regional or national basis.

(ix) The nature and severity of the human health and environmental damage that has occurred as a result of the improper management of wastes containing the constituent.

(x) Action taken by other governmental agencies or regulatory programs based on the health or environmental hazard posed by the waste or waste constituent.

(xi) Such other factors as may be appropriate.

Substances will be listed on Appendix VIII only if they have been shown in scientific studies to have toxic, carcinogenic, mutagenic or teratogenic effects on humans or other life forms.

(Wastes listed in accordance with these criteria will be designated Toxic wastes.)

(b) The Administrator may list classes or types of solid waste as hazardous waste if he has reason to believe that individual wastes, within the class or type of waste, typically or frequently are hazardous under the definition of hazardous waste found in section 1004(5) of the Act.

(c) The Administrator will use the criteria for listing specified in this section to establish the exclusion limits referred to in § 261.5(c).

Subpart C—Characteristics of Hazardous Waste

§ 261.20 General.

(a) A solid waste, as defined in § 261.2, which is not excluded from regulation as a hazardous waste under § 261.4(b), is a hazardous waste if it exhibits any of the characteristics identified in this subpart.

[*Comment*: § 262.11 of this chapter sets forth the generator's responsibility to determine whether his waste exhibits one or more of the characteristics identified in this subpart]

(b) A hazardous waste which is identified by a characteristic in this subpart, but is not listed as a hazardous waste in Subpart D, is assigned the EPA Hazardous Waste Number set forth in the respective characteristic in this subpart. This number must be used in complying with the notification requirements of section 3010 of the Act and certain recordkeeping and reporting requirements under Parts 262 through 265, 268, and Part 270 of this chapter.

(c) For purposes of this subpart, the Administrator will consider a sample obtained using any of the applicable sampling methods specified in Appendix I to be a representative sample within the meaning of Part 260 of this chapter.

[*Comment*: Since the Appendix I sampling methods are not being formally adopted by the Administrator, a person who desires to employ an alternative sampling method is not required to demonstrate the equivalency of his method under the procedures set forth in §§ 260.20 and 260.21.]

[45 FR 33119, May 19, 1980, as amended at 48 FR 14294, Apr. 1, 1983; 51 FR 40636, Nov. 7, 1986]

§ 261.21 Characteristic of ignitability.

(a) A solid waste exhibits the characteristic of ignitability if a representative sample of the waste has any of the following properties:

(1) It is a liquid, other than an aqueous solution containing less than 24 percent alcohol by volume and has flash point less than 60°C (140°F), as determined by a Pensky-Martens Closed Cup Tester, using the test method specified in ASTM Standard D-93-79 or D-93-80 (incorporated by reference, see § 260.11), or a Setaflash Closed Cup Tester, using the test method specified in ASTM Standard D-3278-78 (incorporated by reference, see § 260.11), or as determined by an equivalent test method approved by the Administrator under procedures set forth in §§ 260.20 and 260.21.

(2) It is not a liquid and is capable, under standard temperature and pressure, of causing fire through friction, absorption of moisture or spontaneous chemical changes and, when ignited, burns so vigorously and persistently that it creates a hazard.

(3) It is an ignitable compressed gas as defined in 49 CFR 173.300 and as determined by the test methods described in that regulation or equivalent test methods approved by the Administrator under §§ 260.20 and 260.21.

(4) It is an oxidizer as defined in 49 CFR 173.151.

(b) A solid waste that exhibits the characteristic of ignitability, but is not listed as a hazardous waste in Subpart D, has the EPA Hazardous Waste Number of D001.

[45 FR 33119, May 19, 1980, as amended at 46 FR 35247, July 7, 1981]

§ 261.22 Characteristic of corrosivity.

(a) A solid waste exhibits the characteristic of corrosivity if a representative sample of the waste has either of the following properties:

(1) It is aqueous and has a pH less than or equal to 2 or greater than or equal to 12.5, as determined by a pH meter using either an EPA test method or an equivalent test method approved by the Administrator under the procedures set forth in §§ 260.20 and 260.21. The EPA test method for pH is specified as Method 5.2 in "Test Methods for the Evaluation of Solid Waste, Physical/Chemical Methods" (incorporated by reference, see § 260.11).

(2) It is a liquid and corrodes steel (SAE 1020) at a rate greater than 6.35 mm (0.250 inch) per year at a test temperature of 55°C (130°F) as determined by the test method specified in NACE (National Association of Corrosion Engineers) Standard TM-01-69 as standardized in "Test Methods for the Evaluation of Solid Waste, Physical/Chemical Methods" (incorporated by reference, see § 260.11) or an equivalent test method approved by the Administrator under the procedures set forth in §§ 260.20 and 260.21.

(b) A solid waste that exhibits the characteristic of corrosivity, but is not listed as a hazardous waste in Subpart D, has the EPA Hazardous Waste Number of D002.

[45 FR 33119, May 19, 1980, as amended at 46 FR 35247, July 7, 1981]

§ 261.23 Characteristic of reactivity.

(a) A solid waste exhibits the characteristic of reactivity if a representative sample of the waste has *any* of the following properties:

(1) It is normally unstable and readily undergoes violent change without detonating.

(2) It reacts violently with water.

(3) It forms potentially explosive mixtures with water.

(4) When mixed with water, it generates toxic gases, vapors or fumes in a quantity sufficient to present a danger to human health or the environment.

(5) It is a cyanide or sulfide bearing waste which, when exposed to pH conditions between 2 and 12.5, can gener-

ate toxic gases, vapors or fumes in a quantity sufficient to present a danger to human health or the environment.

(6) It is capable of detonation or explosive reaction if it is subjected to a strong initiating source or if heated under confinement.

(7) It is readily capable of detonation or explosive decomposition or reaction at standard temperature and pressure.

(8) It is a forbidden explosive as defined in 49 CFR 173.51, or a Class A explosive as defined in 49 CFR 173.53 or a Class B explosive as defined in 49 CFR 173.88.

(b) A solid waste that exhibits the characteristic of reactivity, but is not listed as a hazardous waste in Subpart D, has the EPA Hazardous Waste Number of D003.

§ 261.24 Characteristic of EP toxicity.

(a) A solid waste exhibits the characteristic of EP toxicity if, using the test methods described in Appendix II or equivalent methods approved by the Administrator under the procedures set forth in §§ 260.20 and 260.21, the extract from a representative sample of the waste contains any of the contaminants listed in Table I at a concentration equal to or greater than the respective value given in that Table. Where the waste contains less than 0.5 percent filterable solids, the waste itself, after filtering, is considered to be the extract for the purposes of this section.

(b) A solid waste that exhibits the characteristic of EP toxicity, but is not listed as a hazardous waste in Subpart D, has the EPA Hazardous Waste Number specified in Table I which corresponds to the toxic contaminant causing it to be hazardous.

TABLE I—MAXIMUM CONCENTRATION OF CONTAMINANTS FOR CHARACTERISTIC OF EP TOXICITY

EPA hazardous waste number	Contaminant	Maximum concentration (milligrams per liter)
D004	Arsenic	5.0
D005	Barium	100.0
D006	Cadmium	1.0
D007	Chromium	5.0

TABLE I—MAXIMUM CONCENTRATION OF CONTAMINANTS FOR CHARACTERISTIC OF EP TOXICITY—Continued

EPA hazardous waste number	Contaminant	Maximum concentration (milligrams per liter)
D008	Lead	5.0
D009	Mercury	0.2
D010	Selenium	1.0
D011	Silver	5.0
D012	Endrin (1,2,3,4,10,10-hexachloro-1,7-epoxy-1,4,4a,5,6,7,8,8a-octahydro-1,4-endo, endo-5,8-dimethano-naphthalene.	0.02
D013	Lindane (1,2,3,4,5,6-hexa- chlorocyclohexane, gamma isomer.	0.4
D014	Methoxychlor (1,1,1-Trichloro-2,2-bis [p-methoxyphenyl]ethane).	10.0
D015	Toxaphene ($C_{10}H_{10}Cl_8$, Technical chlorinated camphene, 67-69 percent chlorine).	0.5
D016	2,4-D, (2,4-Dichlorophenoxyacetic acid).	10.0
D017	2,4,5-TP Silvex (2,4,5-Trichlorophenoxypropionic acid).	1.0

Subpart D—Lists of Hazardous Wastes

§ 261.30 General.

(a) A solid waste is a hazardous waste if it is listed in this subpart, unless it has been excluded from this list under §§ 260.20 and 260.22.

(b) The Administrator will indicate his basis for listing the classes or types of wastes listed in this Subpart by employing one or more of the following Hazard Codes:

Ignitable Waste	(I)
Corrosive Waste	(C)
Reactive Waste	(R)
EP Toxic Waste	(E)
Acute Hazardous Waste	(H)
Toxic Waste	(T)

Appendix VII identifies the constituent which caused the Administrator to list the waste as an EP Toxic Waste (E) or Toxic Waste (T) in §§ 261.31 and 261.32.

(c) Each hazardous waste listed in this subpart is assigned an EPA Hazardous Waste Number which precedes the name of the waste. This number must be used in complying with the

notification requirements of Section 3010 of the Act and certain recordkeeping and reporting requirements under Parts 262 through 265, 268, and Part 270 of this chapter.

(d) The following hazardous wastes listed in § 261.31 or § 261.32 are subject to the exclusion limits for acutely hazardous wastes established in § 261.5: EPA Hazardous Wastes Nos. FO20, FO21, FO22, FO23, FO26, and FO27.

[45 FR 33119, May 19, 1980, as amended at 48 FR 14294, Apr. 1, 1983; 50 FR 2000, Jan. 14, 1985; 51 FR 40636, Nov. 7, 1986]

§ 261.31 Hazardous wastes from non-specific sources.

The following solid wastes are listed hazardous wastes from non-specific sources unless they are excluded under §§ 260.20 and 260.22 and listed in Appendix IX.

Industry and EPA hazardous waste No.	Hazardous waste	Hazard code
Generic:		
F001	The following spent halogenated solvents used in degreasing: Tetrachloroethylene, trichloroethylene, methylene chloride, 1,1,1-trichloroethane, carbon tetrachloride, and chlorinated fluorocarbons; all spent solvent mixtures/blends used in degreasing containing, before use, a total of ten percent or more (by volume) of one or more of the above halogenated solvents or those solvents listed in F002, F004, and F005; and still bottoms from the recovery of these spent solvents and spent solvent mixtures.	(T)
F002	The following spent halogenated solvents: Tetrachloroethylene, methylene chloride, trichloroethylene, 1,1,1-trichloroethane, chlorobenzene, 1,1,2-trichloro-1,2,2-trifluoroethane, ortho-dichlorobenzene, trichlorofluoromethane, and 1,1,2-trichloroethane; all spent solvent mixtures/blends containing, before use, a total of ten percent or more (by volume) of one or more of the above halogenated solvents or those listed in F001, F004, or F005; and still bottoms from the recovery of these spent solvents and spent solvent mixtures.	(T)
F003	The following spent non-halogenated solvents: Xylene, acetone, ethyl acetate, ethyl benzene, ethyl ether, methyl isobutyl ketone, n-butyl alcohol, cyclohexanone, and methanol; all spent solvent mixtures/blends containing, before use, only the above spent non-halogenated solvents; and all spent solvent mixtures/blends containing, before use, one or more of the above non-halogenated solvents, and, a total of ten percent or more (by volume) of one or more of those solvents listed in F001, F002, F004, and F005; and still bottoms from the recovery of these spent solvents and spent solvent mixtures.	(I)*
F004	The following spent non-halogenated solvents: Cresols and cresylic acid, and nitrobenzene; all spent solvent mixtures/blends containing, before use, a total of ten percent or more (by volume) of one or more of the above non-halogenated solvents or those solvents listed in F001, F002, and F005; and still bottoms from the recovery of these spent solvents and spent solvent mixtures.	(T)
F005	The following spent non-halogenated solvents: Toluene, methyl ethyl ketone, carbon disulfide, isobutanol, pyridine, benzene, 2-ethoxyethanol, and 2-nitropropane; all spent solvent mixtures/blends containing, before use, a total of ten percent or more (by volume) of one or more of the above non-halogenated solvents or those solvents listed in F001, F002, or F004; and still bottoms from the recovery of these spent solvents and spent solvent mixtures.	(I,T)
F006	Wastewater treatment sludges from electroplating operations except from the following processes: (1) Sulfuric acid anodizing of aluminum; (2) tin plating on carbon steel; (3) zinc plating (segregated basis) on carbon steel; (4) aluminum or zinc-aluminum plating on carbon steel; (5) cleaning/stripping associated with tin, zinc and aluminum plating on carbon steel; and (6) chemical etching and milling of aluminum.	(T)
F019	Wastewater treatment sludges from the chemical conversion coating of aluminum	(T)
F007	Spent cyanide plating bath solutions from electroplating operations	(R, T)
F008	Plating bath residues from the bottom of plating baths from electroplating operations where cyanides are used in the process.	(R, T)
F009	Spent stripping and cleaning bath solutions from electroplating operations where cyanides are used in the process.	(R, T)
F010	Quenching bath residues from oil baths from metal heat treating operations where cyanides are used in the process.	(R, T)
F011	Spent cyanide solutions from salt bath pot cleaning from metal heat treating operations.	(R, T)
F012	Quenching waste water treatment sludges from metal heat treating operations where cyanides are used in the process.	(T)

20-142 O—88——14

Industry and EPA hazardous waste No.	Hazardous waste	Hazard code
F024	Wastes, including but not limited to, distillation residues, heavy ends, tars, and reactor clean-out wastes from the production of chlorinated aliphatic hydrocarbons, having carbon content from one to five, utilizing free radical catalyzed processes. [This listing does not include light ends, spent filters and filter aids, spent dessicants, wastewater, wastewater treatment sludges, spent catalysts, and wastes listed in § 261.32.].	(T)
F020	Wastes (except wastewater and spent carbon from hydrogen chloride purification) from the production or manufacturing use (as a reactant, chemical intermediate, or component in a formulating process) of tri- or tetrachlorophenol, or of intermediates used to produce their pesticide derivatives. (This listing does not include wastes from the production of Hexachlorophene from highly purified 2,4,5-trichlorophenol.).	(H)
F021	Wastes (except wastewater and spent carbon from hydrogen chloride purification) from the production or manufacturing use (as a reactant, chemical intermediate, or component in a formulating process) of pentachlorophenol, or of intermediates used to produce its derivatives.	(H)
F022	Wastes (except wastewater and spent carbon from hydrogen chloride purification) from the manufacturing use (as a reactant, chemical intermediate, or component in a formulating process) of tetra-, penta-, or hexachlorobenzenes under alkaline conditions.	(H)
F023	Wastes (except wastewater and spent carbon from hydrogen chloride purification) from the production of materials on equipment previously used for the production or manufacturing use (as a reactant, chemical intermediate, or component in a formulating process) of tri- and tetrachlorophenols. (This listing does not include wastes from equipment used only for the production or use of Hexachlorophene from highly purified 2,4,5-trichlorophenol.).	(H)
F026	Wastes (except wastewater and spent carbon fro . hydrogen chloride purification) from the production of materials on equipment pre.iously used for the manufacturing use (as a reactant, chemical intermediate, or component in a formulating process) of tetra-, penta-, or hexachlorobenzene under alkaline conditions.	(H)
F027	Discarded unused formulations containing tri-, tetra-, or pentachlorophenol or discarded unused formulations containing compounds derived from these chlorophenols. (This listing does not include formulations containing Hexachlorophene sythesized from prepurified 2,4,5-trichlorophenol as the sole component.).	(H)
F028	Residues resulting from the incineration or thermal treatment of soil contaminated with EPA Hazardous Waste Nos. F020, F021, F022, F023, F026, and F027.	(T)

*(I,T) should be used to specify mixtures containing ignitable and toxic constituents.

[46 FR 4617, Jan. 16, 1981, as amended at 46 FR 27477, May 20, 1981; 49 FR 5312, Feb. 10, 1984; 49 FR 37070, Sept. 21, 1984; 50 FR 665, Jan. 4, 1985; 50 FR 2000, Jan. 14, 1985; 50 FR 53319, Dec. 31, 1985; 51 FR 2702, Jan. 21, 1986; 51 FR 6541, Feb. 25, 1986]

§ 261.32 Hazardous wastes from specific sources.

The following solid wastes are listed hazardous wastes from specific sources unless they are excluded under §§ 260.20 and 260.22 and listed in Appendix IX.

Industry and EPA hazardous waste No.	Hazardous waste	Hazard code
Wood preservation: K001	Bottom sediment sludge from the treatment of wastewaters from wood preserving processes that use creosote and/or pentachlorophenol.	(T)
Inorganic pigments:		
K002	Wastewater treatment sludge from the production of chrome yellow and orange pigments.	(T)
K003	Wastewater treatment sludge from the production of molybdate orange pigments	(T)
K004	Wastewater treatment sludge from the production of zinc yellow pigments	(T)
K005	Wastewater treatment sludge from the production of chrome green pigments	(T)
K006	Wastewater treatment sludge from the production of chrome oxide green pigments (anhydrous and hydrated).	(T)
K007	Wastewater treatment sludge from the production of iron blue pigments	(T)
K008	Oven residue from the production of chrome oxide green pigments	(T)
Organic chemicals:		
K009	Distillation bottoms from the production of acetaldehyde from ethylene	(T)
K010	Distillation side cuts from the production of acetaldehyde from ethylene	(T)
K011	Bottom stream from the wastewater stripper in the production of acrylonitrile	(R, T)
K013	Bottom stream from the acetonitrile column in the production of acrylonitrile	(R, T)
K014	Bottoms from the acetonitrile purification column in the production of acrylonitrile	(T)
K015	Still bottoms from the distillation of benzyl chloride	(T)

Industry and EPA hazardous waste No.	Hazardous waste	Hazard code
K016	Heavy ends or distillation residues from the production of carbon tetrachloride	(T)
K017	Heavy ends (still bottoms) from the purification column in the production of epichlorohydrin.	(T)
K018	Heavy ends from the fractionation column in ethyl chloride production	(T)
K019	Heavy ends from the distillation of ethylene dichloride in ethylene dichloride production.	(T)
K020	Heavy ends from the distillation of vinyl chloride in vinyl chloride monomer production.	(T)
K021	Aqueous spent antimony catalyst waste from fluoromethanes production	(T)
K022	Distillation bottom tars from the production of phenol/acetone from cumene	(T)
K023	Distillation light ends from the production of phthalic anhydride from naphthalene	(T)
K024	Distillation bottoms from the production of phthalic anhydride from naphthalene	(T)
K093	Distillation light ends from the production of phthalic anhydride from ortho-xylene	(T)
K094	Distillation bottoms from the production of phthalic anhydride from ortho-xylene	(T)
K025	Distillation bottoms from the production of nitrobenzene by the nitration of benzene	(T)
K026	Stripping still tails from the production of methy ethyl pyridines	(T)
K027	Centrifuge and distillation residues from toluene diisocyanate production	(R, T)
K028	Spent catalyst from the hydrochlorinator reactor in the production of 1,1,1-trichloroethane.	(T)
K029	Waste from the product steam stripper in the production of 1,1,1-trichloroethane	(T)
K095	Distillation bottoms from the production of 1,1,1-trichloroethane	(T)
K096	Heavy ends from the heavy ends column from the production of 1,1,1-trichloroethane.	(T)
K030	Column bottoms or heavy ends from the combined production of trichloroethylene and perchloroethylene.	(T)
K083	Distillation bottoms from aniline production	(T)
K103	Process residues from aniline extraction from the production of aniline	(T)
K104	Combined wastewater streams generated from nitrobenzene/aniline production	(T)
K085	Distillation or fractionation column bottoms from the production of chlorobenzenes	(T)
K105	Separated aqueous stream from the reactor product washing step in the production of chlorobenzenes.	(T)
K111	Product washwaters from the production of dinitrotoluene via nitration of toluene	(C,T)
K112	Reaction by-product water from the drying column in the production of toluenediamine via hydrogenation of dinitrotoluene.	(T)
K113	Condensed liquid light ends from the purification of toluenediamine in the production of toluenediamine via hydrogenation of dinitrotoluene.	(T)
K114	Vicinals from the purification of toluenediamine in the production of toluenediamine via hydrogenation of dinitrotoluene.	(T)
K115	Heavy ends from the purification of toluenediamine in the production of toluenediamine via hydrogenation of dinitrotoluene.	(T)
K116	Organic condensate from the solvent recovery column in the production of toluene diisocyanate via phosgenation of toluenediamine.	(T)
K117	Wastewater from the reactor vent gas scrubber in the production of ethylene dibromide via bromination of ethene.	(T)
K118	Spent adsorbent solids from purification of ethylene dibromide in the production of ethylene dibromide via bromination of ethene.	(T)
K136	Still bottoms from the purification of ethylene dibromide in the production of ethylene dibromide via bromination of ethene.	(T)
Inorganic chemicals:		
K071	Brine purification muds from the mercury cell process in chlorine production, where separately prepurified brine is not used.	(T)
K073	Chlorinated hydrocarbon waste from the purification step of the diaphragm cell process using graphite anodes in chlorine production.	(T)
K106	Wastewater treatment sludge from the mercury cell process in chlorine production	(T)
Pesticides:		
K031	By-product salts generated in the production of MSMA and cacodylic acid	(T)
K032	Wastewater treatment sludge from the production of chlordane	(T)
K033	Wastewater and scrub water from the chlorination of cyclopentadiene in the production of chlordane.	(T)
K034	Filter solids from the filtration of hexachlorocyclopentadiene in the production of chlordane.	(T)
K097	Vacuum stripper discharge from the chlordane chlorinator in the production of chlordane.	(T)
K035	Wastewater treatment sludges generated in the production of creosote	(T)
K036	Still bottoms from toluene reclamation distillation in the production of disulfoton	(T)
K037	Wastewater treatment sludges from the production of disulfoton	(T)
K038	Wastewater from the washing and stripping of phorate production	(T)
K039	Filter cake from the filtration of diethylphosphorodithioic acid in the production of phorate.	(T)
K040	Wastewater treatment sludge from the production of phorate	(T)
K041	Wastewater treatment sludge from the production of toxaphene	(T)
K098	Untreated process wastewater from the production of toxaphene	(T)

Industry and EPA hazardous waste No.	Hazardous waste	Hazard code
K042	Heavy ends or distillation residues from the distillation of tetrachlorobenzene in the production of 2,4,5-T.	(T)
K043	2,6-Dichlorophenol waste from the production of 2,4-D	(T)
K099	Untreated wastewater from the production of 2,4-D	(T)
K123	Process wastewater (including supernates, filtrates, and washwaters) from the production of ethylenebisdithiocarbamic acid and its salt.	(T)
K124	Reactor vent scrubber water from the production of ethylenebisdithiocarbamic acid and its salts.	(C, T)
K125	Filtration, evaporation, and centrifugation solids from the production of ethylenebisdithiocarbamic acid and its salts.	(T)
K126	Baghouse dust and floor sweepings in milling and packaging operations from the production or formulation of ethylenebisdithiocarbamic acid and its salts.	(T)
Explosives:		
K044	Wastewater treatment sludges from the manufacturing and processing of explosives	(R)
K045	Spent carbon from the treatment of wastewater containing explosives	(R)
K046	Wastewater treatment sludges from the manufacturing, formulation and loading of lead-based initiating compounds.	(T)
K047	Pink/red water from TNT operations	(R)
Petroleum refining:		
K048	Dissolved air flotation (DAF) float from the petroleum refining industry	(T)
K049	Slop oil emulsion solids from the petroleum refining industry	(T)
K050	Heat exchanger bundle cleaning sludge from the petroleum refining industry	(T)
K051	API separator sludge from the petroleum refining industry	(T)
K052	Tank bottoms (leaded) from the petroleum refining industry	(T)
Iron and steel:		
K061	Emission control dust/sludge from the primary production of steel in electric furnaces.	(T)
K062	Spent pickle liquor generated by steel finishing operations of facilities within the iron and steel industry (SIC Codes 331 and 332).	(C,T)
Secondary lead:		
K069	Emission control dust/sludge from secondary lead smelting	(T)
K100	Waste leaching solution from acid leaching of emission control dust/sludge from secondary lead smelting.	(T)
Veterinary pharmaceuticals:		
K084	Wastewater treatment sludges generated during the production of veterinary pharmaceuticals from arsenic or organo-arsenic compounds.	(T)
K101	Distillation tar residues from the distillation of aniline-based compounds in the production of veterinary pharmaceuticals from arsenic or organo-arsenic compounds.	(T)
K102	Residue from the use of activated carbon for decolorization in the production of veterinary pharmaceuticals from arsenic or organo-arsenic compounds.	(T)
Ink formulation: K086	Solvent washes and sludges, caustic washes and sludges, or water washes and sludges from cleaning tubs and equipment used in the formulation of ink from pigments, driers, soaps, and stabilizers containing chromium and lead.	(T)
Coking:		
K060	Ammonia still lime sludge from coking operations	(T)
K087	Decanter tank tar sludge from coking operations	(T)

[46 FR 4618, Jan. 16, 1981, as amended at 46 FR 27476-27477, May 20, 1981; 49 FR 37070, Sept. 21, 1984; 50 FR 42942, Oct. 23, 1985; 51 FR 5330, Feb. 13, 1986; 51 FR 19322, May 28, 1986; 51 FR 33612, Sept. 22, 1986; 51 FR 37729, Oct. 24, 1986; 52 FR 28698, Aug. 3, 1987]

§ 261.33 Discarded commercial chemical products, off-specification species, container residues, and spill residues thereof.

The following materials or items are hazardous wastes if and when they are discarded or intended to be discarded as described in § 261.2(a)(2)(i), when they are mixed with waste oil or used oil or other material and applied to the land for dust suppression or road treatment, when they are otherwise applied to the land in lieu of their original intended use or when they are contained in products that are applied to the land in lieu of their original intended use, or when, in lieu of their original intended use, they are produced for use as (or as a component of) a fuel, distributed for use as a fuel, or burned as a fuel.

(a) Any commercial chemical product, or manufacturing chemical intermediate having the generic name listed in paragraph (e) or (f) of this section.

(b) Any off-specification commercial chemical product or manufacturing chemical intermediate which, if it met specifications, would have the generic name listed in paragraph (e) or (f) of this section.

(c) Any residue remaining in a container or in an inner liner removed from a container that has held any commercial chemical product or manufacturing chemical intermediate having the generic name listed in paragraph (e) of this section, unless the container is empty as defined in § 261.7(b)(3) of the chapter.

[Comment: Unless the residue is being beneficially used or reused, or legitimately recycled or reclaimed; or being accumulated, stored, transported or treated prior to such use, re-use, recycling or reclamation, EPA considers the residue to be intended for discard, and thus, a hazardous waste. An example of a legitimate re-use of the residue would be where the residue remains in the container and the container is used to hold the same commercial chemical product or manufacturing chemical intermediate it previously held. An example of the discard of the residue would be where the drum is sent to a drum reconditioner who reconditions the drum but discards the residue.]

(d) Any residue or contaminated soil, water or other debris resulting from the cleanup of a spill into or on any land or water of any commercial chemical product or manufacturing chemical intermediate having the generic name listed in paragraph (e) or (f) of this section, or any residue or contaminated soil, water or other debris resulting from the cleanup of a spill, into or on any land or water, of any off-specification chemical product and manufacturing chemical intermediate which, if it met specifications, would have the generic name listed in paragraph (e) or (f) of this section.

[*Comment:* The phrase "commercial chemical product or manufacturing chemical intermediate having the generic name listed in . . ." refers to a chemical substance which is manufactured or formulated for commercial or manufacturing use which consists of the commercially pure grade of the chemical, any technical grades of the chemical that are produced or marketed, and all formulations in which the chemical is the sole active ingredient. It does not refer to a material, such as a manufacturing process waste, that contains any of the substances listed in paragraph (e) or (f). Where a manufacturing process waste is deemed to be a hazardous waste because it contains a substance listed in paragraph (e) or (f), such waste will be listed in either § 261.31 or § 261.32 or will be identified as a hazardous waste by the characteristics set forth in Subpart C of this part.]

(e) The commercial chemical products, manufacturing chemical intermediates or off-specification commercial chemical products or manufacturing chemical intermediates referred to in paragraphs (a) through (d) of this section, are identified as acute hazardous wastes (H) and are subject to be the small quantity exclusion defined in § 261.5(e).

[*Comment:* For the convenience of the regulated community the primary hazardous properties of these materials have been indicated by the letters T (Toxicity), and R (Reactivity). Absence of a letter indicates that the compound only is listed for acute toxicity.]

These wastes and their corresponding EPA Hazardous Waste Numbers are:

Hazardous waste No.	Chemical abstracts No.	Substance
P023	107-20-0	Acetaldehyde, chloro-
P002	591-08-2	Acetamide, N-(aminothioxomethyl)-
P057	640-19-7	Acetamide, 2-fluoro-
P058	62-74-8	Acetic acid, fluoro-, sodium salt
P002	591-08-2	1-Acetyl-2-thiourea
P003	107-02-8	Acrolein
P070	116-06-3	Aldicarb
P004	309-00-2	Aldrin
P005	107-18-6	Allyl alcohol
P006	20859-73-8	Aluminum phosphide (R,T)
P007	2763-96-4	5-(Aminomethyl)-3-isoxazolol
P008	504-24-5	4-Aminopyridine
P009	131-74-8	Ammonium picrate (R)

Hazardous waste No.	Chemical abstracts No.	Substance
P119	7803-55-6	Ammonium vanadate
P099	506-61-6	Argentate(1-), bis(cyano-C)-, potassium
P010	7778-39-4	Arsenic acid H_3AsO_4
P012	1327-53-3	Arsenic oxide As_2O_3
P011	1303-28-2	Arsenic oxide As_2O_5
P011	1303-28-2	Arsenic pentoxide
P012	1327-53-3	Arsenic trioxide
P038	692-42-2	Arsine, diethyl-
P036	696-28-6	Arsonous dichloride, phenyl-
P054	151-56-4	Aziridine
P067	75-55-8	Aziridine, 2-methyl-
P013	542-62-1	Barium cyanide
P024	106-47-8	Benzenamine, 4-chloro-
P077	100-01-6	Benzenamine, 4-nitro-
P028	100-44-7	Benzene, (chloromethyl)-
P042	51-43-4	1,2-Benzenediol, 4-[1-hydroxy-2-(methylamino)ethyl]-, (R)-
P046	122-09-8	Benzeneethanamine, alpha,alpha-dimethyl-
P014	108-98-5	Benzenethiol
P001	[1] 81-81-2	2H-1-Benzopyran-2-one, 4-hydroxy-3-(3-oxo-1-phenylbutyl)-, & salts, when present at concentrations greater than 0.3%
P028	100-44-7	Benzyl chloride
P015	7440-41-7	Beryllium
P017	598-31-2	Bromoacetone
P018	357-57-3	Brucine
P045	39196-18-4	2-Butanone, 3,3-dimethyl-1-(methylthio)-, O-[(methylamino)carbonyl] oxime
P021	592-01-8	Calcium cyanide
P021	592-01-8	Calcium cyanide $Ca(CN)_2$
P022	75-15-0	Carbon disulfide
P095	75-44-5	Carbonic dichloride
P023	107-20-0	Chloroacetaldehyde
P024	106-47-8	p-Chloroaniline
P026	5344-82-1	1-(o-Chlorophenyl)thiourea
P027	542-76-7	3-Chloropropionitrile
P029	544-92-3	Copper cyanide
P029	544-92-3	Copper cyanide Cu(CN)
P030	.....	Cyanides (soluble cyanide salts), not otherwise specified
P031	460-19-5	Cyanogen
P033	506-77-4	Cyanogen chloride
P033	506-77-4	Cyanogen chloride (CN)Cl
P034	131-89-5	2-Cyclohexyl-4,6-dinitrophenol
P016	542-88-1	Dichloromethyl ether
P036	696-28-6	Dichlorophenylarsine
P037	60-57-1	Dieldrin
P038	692-42-2	Diethylarsine
P041	311-45-5	Diethyl-p-nitrophenyl phosphate
P040	297-97-2	O,O-Diethyl O-pyrazinyl phosphorothioate
P043	55-91-4	Diisopropylfluorophosphate (DFP)
P004	309-00-2	1,4,5,8-Dimethanonaphthalene, 1,2,3,4,10,10-hexa- chloro-1,4,4a,5,8,8a,-hexahydro-, (1alpha,4alpha,4abeta,5alpha,8alpha,8abeta)-
P060	465-73-6	1,4,5,8-Dimethanonaphthalene, 1,2,3,4,10,10-hexa- chloro-1,4,4a,5,8,8a-hexahydro-, (1alpha,4alpha,4abeta,5beta,8beta,8abeta)-
P037	60-57-1	2,7:3,6-Dimethanonaphth[2,3-b]oxirene, 3,4,5,6,9,9-hexachloro-1a,2,2a,3,6,6a,7,7a-octahydro-, (1aalpha,2beta,2aalpha,3beta,6beta,6aalpha,7beta, 7aalpha)-
P051	[1] 72-20-8	2,7:3,6-Dimethanonaphth [2,3-b]oxirene, 3,4,5,6,9,9-hexachloro-1a,2,2a,3,6,6a,7,7a-octahydro-, (1aalpha,2beta,2abeta,3alpha,6alpha,6abeta,7beta, 7aalpha)-, & metabolites
P044	60-51-5	Dimethoate
P046	122-09-8	alpha,alpha-Dimethylphenethylamine
P047	[1] 534-52-1	4,6-Dinitro-o-cresol, & salts
P048	51-28-5	2,4-Dinitrophenol
P020	88-85-7	Dinoseb
P085	152-16-9	Diphosphoramide, octamethyl-
P111	107-49-3	Diphosphoric acid, tetraethyl ester
P039	298-04-4	Disulfoton
P049	541-53-7	Dithiobiuret
P050	115-29-7	Endosulfan
P088	145-73-3	Endothall
P051	72-20-8	Endrin
P051	72-20-8	Endrin & metabolites

Hazardous waste No.	Chemical abstracts No.	Substance
P042	51-43-4	Epinephrine
P031	460-19-5	Ethanedinitrile
P066	16752-77-5	Ethanimidothioic acid, N-[[(methylamino)carbonyl]oxy]-, methyl ester
P101	107-12-0	Ethyl cyanide
P054	151-56-4	Ethyleneimine
P097	52-85-7	Famphur
P056	7782-41-4	Fluorine
P057	640-19-7	Fluoroacetamide
P058	62-74-8	Fluoroacetic acid, sodium salt
P065	628-86-4	Fulminic acid, mercury(2+) salt (R,T)
P059	76-44-8	Heptachlor
P062	757-58-4	Hexaethyl tetraphosphate
P116	79-19-6	Hydrazinecarbothioamide
P068	60-34-4	Hydrazine, methyl-
P063	74-90-8	Hydrocyanic acid
P063	74-90-8	Hydrogen cyanide
P096	7803-51-2	Hydrogen phosphide
P060	465-73-6	Isodrin
P007	2763-96-4	3(2H)-Isoxazolone, 5-(aminomethyl)-
P092	62-38-4	Mercury, (acetato-O)phenyl-
P065	628-86-4	Mercury fulminate (R,T)
P082	62-75-9	Methanamine, N-methyl-N-nitroso-
P064	624-83-9	Methane, isocyanato-
P016	542-88-1	Methane, oxybis[chloro-
P112	509-14-8	Methane, tetranitro- (R)
P118	75-70-7	Methanethiol, trichloro-
P050	115-29-7	6,9-Methano-2,4,3-benzodioxathiepin, 6,7,8,9,10,10-hexachloro-1,5,5a,6,9,9a-hexahydro-, 3-oxide
P059	76-44-8	4,7-Methano-1H-indene, 1,4,5,6,7,8,8-heptachloro-3a,4,7,7a-tetrahydro-
P066	16752-77-5	Methomyl
P068	60-34-4	Methyl hydrazine
P064	624-83-9	Methyl isocyanate
P069	75-86-5	2-Methyllactonitrile
P071	298-00-0	Methyl parathion
P072	86-88-4	alpha-Naphthylthiourea
P073	13463-39-3	Nickel carbonyl
P073	13463-39-3	Nickel carbonyl $Ni(CO)_4$, (T-4)-
P074	557-19-7	Nickel cyanide
P074	557-19-7	Nickel cynaide $Ni(CN)_2$
P075	[1] 54-11-5	Nicotine, & salts
P076	10102-43-9	Nitric oxide
P077	100-01-6	p-Nitroaniline
P078	10102-44-0	Nitrogen dioxide
P076	10102-43-9	Nitrogen oxide NO
P078	10102-44-0	Nitrogen oxide NO_2
P081	55-63-0	Nitroglycerine (R)
P082	62-75-9	N-Nitrosodimethylamine
P084	4549-40-0	N-Nitrosomethylvinylamine
P085	152-16-9	Octamethylpyrophosphoramide
P087	20816-12-0	Osmium oxide OsO_4, (T-4)-
P087	20816-12-0	Osmium tetroxide
P088	145-73-3	7-Oxabicyclo[2.2.1]heptane-2,3-dicarboxylic acid
P089	56-38-2	Parathion
P034	131-89-5	Phenol, 2-cyclohexyl-4,6-dinitro-
P048	51-28-5	Phenol, 2,4-dinitro-
P047	[1] 534-52-1	Phenol, 2-methyl-4,6-dinitro-, & salts
P020	88-85-7	Phenol, 2-(1-methylpropyl)-4,6-dinitro-
P009	131-74-8	Phenol, 2,4,6-trinitro-, ammonium salt (R)
P092	62-38-4	Phenylmercury acetate
P093	103-85-5	Phenylthiourea
P094	298-02-2	Phorate
P095	75-44-5	Phosgene
P096	7803-51-2	Phosphine
P041	311-45-5	Phosphoric acid, diethyl 4-nitrophenyl ester
P039	298-04-4	Phosphorodithioic acid, O,O-diethyl S-[2-(ethylthio)ethyl] ester
P094	298-02-2	Phosphorodithioic acid, O,O-diethyl S-[(ethylthio)methyl] ester

Hazardous waste No.	Chemical abstracts No.	Substance
P044	60-51-5	Phosphorodithioic acid, O,O-dimethyl S-[2-(methylamino)-2-oxoethyl] ester
P043	55-91-4	Phosphorofluoridic acid, bis(1-methylethyl) ester
P089	56-38-2	Phosphorothioic acid, O,O-diethyl O-(4-nitrophenyl) ester
P040	297-97-2	Phosphorothioic acid, O,O-diethyl O-pyrazinyl ester
P097	52-85-7	Phosphorothioic acid, O-[4-[(dimethylamino)sulfonyl]phenyl] O,O-dimethyl ester
P071	298-00-0	Phosphorothioic acid, O,O,-dimethyl O-(4-nitrophenyl) ester
P110	78-00-2	Plumbane, tetraethyl-
P098	151-50-8	Potassium cyanide
P098	151-50-8	Potassium cyanide K(CN)
P099	506-61-6	Potassium silver cyanide
P070	116-06-3	Propanal, 2-methyl-2-(methylthio)-, O-[(methylamino)carbonyl]oxime
P101	107-12-0	Propanenitrile
P027	542-76-7	Propanenitrile, 3-chloro-
P069	75-86-5	Propanenitrile, 2-hydroxy-2-methyl-
P081	55-63-0	1,2,3-Propanetriol, trinitrate (R)
P017	598-31-2	2-Propanone, 1-bromo-
P102	107-19-7	Propargyl alcohol
P003	107-02-8	2-Propenal
P005	107-18-6	2-Propen-1-ol
P067	75-55-8	1,2-Propylenimine
P102	107-19-7	2-Propyn-1-ol
P008	504-24-5	4-Pyridinamine
P075	[1] 54-11-5	Pyridine, 3-(1-methyl-2-pyrrolidinyl)-, (S)-, & salts
P114	12039-52-0	Selenious acid, dithallium(1+) salt
P103	630-10-4	Selenourea
P104	506-64-9	Silver cyanide
P104	506-64-9	Silver cyanide Ag(CN)
P105	26628-22-8	Sodium azide
P106	143-33-9	Sodium cyanide
P106	143-33-9	Sodium cyanide Na(CN)
P107	1314-96-1	Strontium sulfide
P107	1314-96-1	Strontium sulfide SrS
P108	[1] 57-24-9	Strychnidin-10-one, & salts
P018	357-57-3	Strychnidin-10-one, 2,3-dimethoxy-
P108	[1] 57-24-9	Strychnine, & salts
P115	7446-18-6	Sulfuric acid, dithallium(1+) salt
P109	3689-24-5	Tetraethyldithiopyrophosphate
P110	78-00-2	Tetraethyl lead
P111	107-49-3	Tetraethyl pyrophosphate
P112	509-14-8	Tetranitromethane (R)
P062	757-58-4	Tetraphosphoric acid, hexaethyl ester
P113	1314-32-5	Thallic oxide
P113	1314-32-5	Thallium oxide Tl_2O_3
P114	12039-52-0	Thallium(I) selenite
P115	7446-18-6	Thallium(I) sulfate
P109	3689-24-5	Thiodiphosphoric acid, tetraethyl ester
P045	39196-18-4	Thiofanox
P049	541-53-7	Thioimidodicarbonic diamide $[(H_2N)C(S)]_2NH$
P014	108-98-5	Thiophenol
P116	79-19-6	Thiosemicarbazide
P026	5344-82-1	Thiourea, (2-chlorophenyl)-
P072	86-88-4	Thiourea, 1-naphthalenyl-
P093	103-85-5	Thiourea, phenyl-
P123	8001-35-2	Toxaphene
P118	75-70-7	Trichloromethanethiol
P119	7803-55-6	Vanadic acid, ammonium salt
P120	1314-62-1	Vanadium oxide V_2O_5
P120	1314-62-1	Vanadium pentoxide
P084	4549-40-0	Vinylamine, N-methyl-N-nitroso-
P001	[1] 81-81-2	Warfarin, & salts, when present at concentrations greater than 0.3%
P121	557-21-1	Zinc cyanide
P121	557-21-1	Zinc cyanide $Zn(CN)_2$
P122	1314-84-7	Zinc phosphide Zn_3P_2, when present at concentrations greater than 10% (R,T)

[1] CAS Number given for parent compound only.

(f) The commercial chemical products, manfacturing chemical intermediates, or off-specification commercial chemical products referred to in paragraphs (a) through (d) of this section, are identified as toxic wastes (T), unless otherwise designated and are subject to the small quantity generator exclusion defined in § 261.5 (a) and (g).

[*Comment:* For the convenience of the regulated community, the primary hazardous properties of these materials have been indicated by the letters T (Toxicity), R (Reactivity), I (Ignitability) and C (Corrosivity). Absence of a letter indicates that the compound is only listed for toxicity.]

These wastes and their corresponding EPA Hazardous Waste Numbers are:

Hazardous waste No.	Chemical abstracts No.	Substance
U001	75-07-0	Acetaldehyde (I)
U034	75-87-6	Acetaldehyde, trichloro-
U167	62-44-2	Acetamide, N-(4-ethoxyphenyl)-
U005	53-96-3	Acetamide, N-9H-fluoren-2-yl-
U240	[1] 94-75-7	Acetic acid, (2,4-dichlorophenoxy)-, salts & esters
U112	141-78-6	Acetic acid ethyl ester (I)
U144	301-04-2	Acetic acid, lead(2+) salt
U214	563-68-8	Acetic acid, thallium(1+) salt
see F027	93-76-5	Acetic acid, (2,4,5-trichlorophenoxy)-
U002	67-64-1	Acetone (I)
U003	75-05-8	Acetonitrile (I,T)
U004	98-86-2	Acetophenone
U005	53-96-3	2-Acetylaminofluorene
U006	75-36-5	Acetyl chloride (C,R,T)
U007	79-06-1	Acrylamide
U008	79-10-7	Acrylic acid (I)
U009	107-13-1	Acrylonitrile
U011	61-82-5	Amitrole
U012	62-53-3	Aniline (I,T)
U136	75-60-5	Arsinic acid, dimethyl-
U014	492-80-8	Auramine
U015	115-02-6	Azaserine
U010	50-07-7	Azirino[2',3':3,4]pyrrolo[1,2-a]indole-4,7-dione, 6-amino-8-[[[(aminocarbonyl)oxy]methyl]-1,1a,2,8,8a,8b-hexahydro-8a-methoxy-5-methyl-, [1aS-(1aalpha, 8beta,8aalpha,8balpha)]-
U157	56-49-5	Benz[j]aceanthrylene, 1,2-dihydro-3-methyl-
U016	225-51-4	Benz[c]acridine
U017	98-87-3	Benzal chloride
U192	23950-58-5	Benzamide, 3,5-dichloro-N-(1,1-dimethyl-2-propynyl)-
U018	56-55-3	Benz[a]anthracene
U094	57-97-6	Benz[a]anthracene, 7,12-dimethyl-
U012	62-53-3	Benzenamine (I,T)
U014	492-80-8	Benzenamine, 4,4'-carbonimidoylbis[N,N-dimethyl-
U049	3165-93-3	Benzenamine, 4-chloro-2-methyl-, hydrochloride
U093	60-11-7	Benzenamine, N,N-dimethyl-4-(phenylazo)-
U328	95-53-4	Benzenamine, 2-methyl-
U353	106-49-0	Benzenamine, 4-methyl-
U158	101-14-4	Benzenamine, 4,4'-methylenebis[2-chloro-
U222	636-21-5	Benzenamine, 2-methyl-, hydrochloride
U181	99-55-8	Benzenamine, 2-methyl-5-nitro-
U019	71-43-2	Benzene (I,T)
U038	510-15-6	Benzeneacetic acid, 4-chloro-alpha-(4-chlorophenyl)-alpha-hydroxy-, ethyl ester
U030	101-55-3	Benzene, 1-bromo-4-phenoxy-
U035	305-03-3	Benzenebutanoic acid, 4-[bis(2-chloroethyl)amino]-
U037	108-90-7	Benzene, chloro-
U221	25376-45-8	Benzenediamine, ar-methyl-
U028	117-81-7	1,2-Benzenedicarboxylic acid, bis(2-ethylhexyl) ester
U069	84-74-2	1,2-Benzenedicarboxylic acid, dibutyl ester
U088	84-66-2	1,2-Benzenedicarboxylic acid, diethyl ester
U102	131-11-3	1,2-Benzenedicarboxylic acid, dimethyl ester
U107	117-84-0	1,2-Benzenedicarboxylic acid, dioctyl ester
U070	95-50-1	Benzene, 1,2-dichloro-
U071	541-73-1	Benzene, 1,3-dichloro-
U072	106-46-7	Benzene, 1,4-dichloro-
U060	72-54-8	Benzene, 1,1'-(2,2-dichloroethylidene)bis[4-chloro-

Hazardous waste No.	Chemical abstracts No.	Substance
U017	98-87-3	Benzene, (dichloromethyl)-
U223	26471-62-5	Benzene, 1,3-diisocyanatomethyl- (R,T)
U239	1330-20-7	Benzene, dimethyl- (I,T)
U201	108-46-3	1,3-Benzenediol
U127	118-74-1	Benzene, hexachloro-
U056	110-82-7	Benzene, hexahydro- (I)
U220	108-88-3	Benzene, methyl-
U105	121-14-2	Benzene, 1-methyl-2,4-dinitro-
U106	606-20-2	Benzene, 2-methyl-1,3-dinitro-
U055	98-82-8	Benzene, (1-methylethyl)- (I)
U169	98-95-3	Benzene, nitro-
U183	608-93-5	Benzene, pentachloro-
U185	82-68-8	Benzene, pentachloronitro-
U020	98-09-9	Benzenesulfonic acid chloride (C,R)
U020	98-09-9	Benzenesulfonyl chloride (C,R)
U207	95-94-3	Benzene, 1,2,4,5-tetrachloro-
U061	50-29-3	Benzene, 1,1'-(2,2,2-trichloroethylidene)bis[4-chloro-
U247	72-43-5	Benzene, 1,1'-(2,2,2-trichloroethylidene)bis[4- methoxy-
U023	98-07-7	Benzene, (trichloromethyl)-
U234	99-35-4	Benzene, 1,3,5-trinitro-
U021	92-87-5	Benzidine
U202	[1] 81-07-2	1,2-Benzisothiazol-3(2H)-one, 1,1-dioxide, & salts
U203	94-59-7	1,3-Benzodioxole, 5-(2-propenyl)-
U141	120-58-1	1,3-Benzodioxole, 5-(1-propenyl)-
U090	94-58-6	1,3-Benzodioxole, 5-propyl-
U064	189-55-9	Benzo[rst]pentaphene
U248	[1] 81-81-2	2H-1-Benzopyran-2-one, 4-hydroxy-3-(3-oxo-1-phenyl-butyl)-, & salts, when present at concentrations of 0.3% or less
U022	50-32-8	Benzo[a]pyrene
U197	106-51-4	p-Benzoquinone
U023	98-07-7	Benzotrichloride (C,R,T)
U085	1464-53-5	2,2'-Bioxirane
U021	92-87-5	[1,1'-Biphenyl]-4,4'-diamine
U073	91-94-1	[1,1'-Biphenyl]-4,4'-diamine, 3,3'-dichloro-
U091	119-90-4	[1,1'-Biphenyl]-4,4'-diamine, 3,3'-dimethoxy-
U095	119-93-7	[1,1'-Biphenyl]-4,4'-diamine, 3,3'-dimethyl-
U225	75-25-2	Bromoform
U030	101-55-3	4-Bromophenyl phenyl ether
U128	87-68-3	1,3-Butadiene, 1,1,2,3,4,4-hexachloro-
U172	924-16-3	1-Butanamine, N-butyl-N-nitroso-
U031	71-36-3	1-Butanol (I)
U159	78-93-3	2-Butanone (I,T)
U160	1338-23-4	2-Butanone, peroxide (R,T)
U053	4170-30-3	2-Butenal
U074	764-41-0	2-Butene, 1,4-dichloro- (I,T)
U143	303-34-4	2-Butenoic acid, 2-methyl-, 7-[[2,3-dihydroxy-2-(1-methoxyethyl)-3-methyl-1-oxobutoxy]methyl]-2,3,5,7a-tetrahydro-1H-pyrrolizin-1-yl ester, [1S-[1alpha(Z),7(2S*,3R*),7aalpha]]-
U031	71-36-3	n-Butyl alcohol (I)
U136	75-60-5	Cacodylic acid
U032	13765-19-0	Calcium chromate
U238	51-79-6	Carbamic acid, ethyl ester
U178	615-53-2	Carbamic acid, methylnitroso-, ethyl ester
U097	79-44-7	Carbamic chloride, dimethyl-
U114	[1] 111-54-6	Carbamodithioic acid, 1,2-ethanediylbis-, salts & esters
U062	2303-16-4	Carbamothioic acid, bis(1-methylethyl)-, S-(2,3-dichloro-2-propenyl) ester
U215	6533-73-9	Carbonic acid, dithallium(1+) salt
U033	353-50-4	Carbonic difluoride
U156	79-22-1	Carbonochloridic acid, methyl ester (I,T)
U033	353-50-4	Carbon oxyfluoride (R,T)
U211	56-23-5	Carbon tetrachloride
U034	75-87-6	Chloral
U035	305-03-3	Chlorambucil
U036	57-74-9	Chlordane, alpha & gamma isomers
U026	494-03-1	Chlornaphazin
U037	108-90-7	Chlorobenzene
U038	510-15-6	Chlorobenzilate
U039	59-50-7	p-Chloro-m-cresol

Hazardous waste No.	Chemical abstracts No.	Substance
U042	110-75-8	2-Chloroethyl vinyl ether
U044	67-66-3	Chloroform
U046	107-30-2	Chloromethyl methyl ether
U047	91-58-7	beta-Chloronaphthalene
U048	95-57-8	o-Chlorophenol
U049	3165-93-3	4-Chloro-o-toluidine, hydrochloride
U032	13765-19-0	Chromic acid H_2CrO_4, calcium salt
U050	218-01-9	Chrysene
U051	.....	Creosote
U052	1319-77-3	Cresol (Cresylic acid)
U053	4170-30-3	Crotonaldehyde
U055	98-82-8	Cumene (I)
U246	506-68-3	Cyanogen bromide (CN)Br
U197	106-51-4	2,5-Cyclohexadiene-1,4-dione
U056	110-82-7	Cyclohexane (I)
U129	58-89-9	Cyclohexane, 1,2,3,4,5,6-hexachloro-, (1alpha,2alpha,3beta,4alpha,5alpha,6beta)-
U057	108-94-1	Cyclohexanone (I)
U130	77-47-4	1,3-Cyclopentadiene, 1,2,3,4,5,5-hexachloro-
U058	50-18-0	Cyclophosphamide
U240	[1] 94-75-7	2,4-D, salts & esters
U059	20830-81-3	Daunomycin
U060	72-54-8	DDD
U061	50-29-3	DDT
U062	2303-16-4	Diallate
U063	53-70-3	Dibenz[a,h]anthracene
U064	189-55-9	Dibenzo[a,i]pyrene
U066	96-12-8	1,2-Dibromo-3-chloropropane
U069	84-74-2	Dibutyl phthalate
U070	95-50-1	o-Dichlorobenzene
U071	541-73-1	m-Dichlorobenzene
U072	106-46-7	p-Dichlorobenzene
U073	91-94-1	3,3'-Dichlorobenzidine
U074	764-41-0	1,4-Dichloro-2-butene (I,T)
U075	75-71-8	Dichlorodifluoromethane
U078	75-35-4	1,1-Dichloroethylene
U079	156-60-5	1,2-Dichloroethylene
U025	111-44-4	Dichloroethyl ether
U027	108-60-1	Dichloroisopropyl ether
U024	111-91-1	Dichloromethoxy ethane
U081	120-83-2	2,4-Dichlorophenol
U082	87-65-0	2,6-Dichlorophenol
U084	542-75-6	1,3-Dichloropropene
U085	1464-53-5	1,2:3,4-Diepoxybutane (I,T)
U108	123-91-1	1,4-Diethyleneoxide
U028	117-81-7	Diethylhexyl phthalate
U086	1615-80-1	N,N'-Diethylhydrazine
U087	3288-58-2	O,O-Diethyl S-methyl dithiophosphate
U088	84-66-2	Diethyl phthalate
U089	56-53-1	Diethylstilbesterol
U090	94-58-6	Dihydrosafrole
U091	119-90-4	3,3'-Dimethoxybenzidine
U092	124-40-3	Dimethylamine (I)
U093	60-11-7	p-Dimethylaminoazobenzene
U094	57-97-6	7,12-Dimethylbenz[a]anthracene
U095	119-93-7	3,3'-Dimethylbenzidine
U096	80-15-9	alpha,alpha-Dimethylbenzylhydroperoxide (R)
U097	79-44-7	Dimethylcarbamoyl chloride
U098	57-14-7	1,1-Dimethylhydrazine
U099	540-73-8	1,2-Dimethylhydrazine
U101	105-67-9	2,4-Dimethylphenol
U102	131-11-3	Dimethyl phthalate
U103	77-78-1	Dimethyl sulfate
U105	121-14-2	2,4-Dinitrotoluene
U106	606-20-2	2,6-Dinitrotoluene
U107	117-84-0	Di-n-octyl phthalate
U108	123-91-1	1,4-Dioxane
U109	122-66-7	1,2-Diphenylhydrazine
U110	142-84-7	Dipropylamine (I)
U111	621-64-7	Di-n-propylnitrosamine

Hazardous waste No.	Chemical abstracts No.	Substance
U041	106-89-8	Epichlorohydrin
U001	75-07-0	Ethanal (I)
U174	55-18-5	Ethanamine, N-ethyl-N-nitroso-
U155	91-80-5	1,2-Ethanediamine, N,N-dimethyl-N'-2-pyridinyl-N'-(2-thienylmethyl)-
U067	106-93-4	Ethane, 1,2-dibromo-
U076	75-34-3	Ethane, 1,1-dichloro-
U077	107-06-2	Ethane, 1,2-dichloro-
U131	67-72-1	Ethane, hexachloro-
U024	111-91-1	Ethane, 1,1'-[methylenebis(oxy)]bis[2-chloro-
U117	60-29-7	Ethane, 1,1'-oxybis-(I)
U025	111-44-4	Ethane, 1,1'-oxybis[2-chloro-
U184	76-01-7	Ethane, pentachloro-
U208	630-20-6	Ethane, 1,1,1,2-tetrachloro-
U209	79-34-5	Ethane, 1,1,2,2-tetrachloro-
U218	62-55-5	Ethanethioamide
U226	71-55-6	Ethane, 1,1,1-trichloro-
U227	79-00-5	Ethane, 1,1,2-trichloro-
U359	110-80-5	Ethanol, 2-ethoxy-
U173	1116-54-7	Ethanol, 2,2'-(nitrosoimino)bis-
U004	98-86-2	Ethanone, 1-phenyl-
U043	75-01-4	Ethene, chloro-
U042	110-75-8	Ethene, (2-chloroethoxy)-
U078	75-35-4	Ethene, 1,1-dichloro-
U079	156-60-5	Ethene, 1,2-dichloro-, (E)-
U210	127-18-4	Ethene, tetrachloro-
U228	79-01-6	Ethene, trichloro-
U112	141-78-6	Ethyl acetate (I)
U113	140-88-5	Ethyl acrylate (I)
U238	51-79-6	Ethyl carbamate (urethane)
U117	60-29-7	Ethyl ether (I)
U114	111-54-6	Ethylenebisdithiocarbamic acid, salts & esters
U067	106-93-4	Ethylene dibromide
U077	107-06-2	Ethylene dichloride
U359	110-80-5	Ethylene glycol monoethyl ether
U115	75-21-8	Ethylene oxide (I,T)
U116	96-45-7	Ethylenethiourea
U076	75-34-3	Ethylidene dichloride
U118	97-63-2	Ethyl methacrylate
U119	62-50-0	Ethyl methanesulfonate
U120	206-44-0	Fluoranthene
U122	50-00-0	Formaldehyde
U123	64-18-6	Formic acid (C,T)
U124	110-00-9	Furan (I)
U125	98-01-1	2-Furancarboxaldehyde (I)
U147	108-31-6	2,5-Furandione
U213	109-99-9	Furan, tetrahydro-(I)
U125	98-01-1	Furfural (I)
U124	110-00-9	Furfuran (I)
U206	18883-66-4	Glucopyranose, 2-deoxy-2-(3-methyl-3-nitrosoureido)-, D-
U206	18883-66-4	D-Glucose, 2-deoxy-2-[[(methylnitrosoamino)-carbonyl]amino]-
U126	765-34-4	Glycidylaldehyde
U163	70-25-7	Guanidine, N-methyl-N'-nitro-N-nitroso-
U127	118-74-1	Hexachlorobenzene
U128	87-68-3	Hexachlorobutadiene
U130	77-47-4	Hexachlorocyclopentadiene
U131	67-72-1	Hexachloroethane
U132	70-30-4	Hexachlorophene
U243	1888-71-7	Hexachloropropene
U133	302-01-2	Hydrazine (R,T)
U086	1615-80-1	Hydrazine, 1,2-diethyl-
U098	57-14-7	Hydrazine, 1,1-dimethyl-
U099	540-73-8	Hydrazine, 1,2-dimethyl-
U109	122-66-7	Hydrazine, 1,2-diphenyl-
U134	7664-39-3	Hydrofluoric acid (C,T)
U134	7664-39-3	Hydrogen fluoride (C,T)
U135	7783-06-4	Hydrogen sulfide
U135	7783-06-4	Hydrogen sulfide H_2S
U096	80-15-9	Hydroperoxide, 1-methyl-1-phenylethyl- (R)
U116	96-45-7	2-Imidazolidinethione

Hazardous waste No.	Chemical abstracts No.	Substance
U137	193-39-5	Indeno[1,2,3-cd]pyrene
U139	9004-66-4	Iron dextran
U190	85-44-9	1,3-Isobenzofurandione
U140	78-83-1	Isobutyl alcohol (I,T)
U141	120-58-1	Isosafrole
U142	143-50-0	Kepone
U143	303-34-4	Lasiocarpine
U144	301-04-2	Lead acetate
U146	1335-32-6	Lead, bis(acetato-O)tetrahydroxytri-
U145	7446-27-7	Lead phosphate
U146	1335-32-6	Lead subacetate
U129	58-89-9	Lindane
U163	70-25-7	MNNG
U147	108-31-6	Maleic anhydride
U148	123-33-1	Maleic hydrazide
U149	109-77-3	Malononitrile
U150	148-82-3	Melphalan
U151	7439-97-6	Mercury
U152	126-98-7	Methacrylonitrile (I, T)
U092	124-40-3	Methanamine, N-methyl- (I)
U029	74-83-9	Methane, bromo-
U045	74-87-3	Methane, chloro- (I, T)
U046	107-30-2	Methane, chloromethoxy-
U068	74-95-3	Methane, dibromo-
U080	75-09-2	Methane, dichloro-
U075	75-71-8	Methane, dichlorodifluoro-
U138	74-88-4	Methane, iodo-
U119	62-50-0	Methanesulfonic acid, ethyl ester
U211	56-23-5	Methane, tetrachloro-
U153	74-93-1	Methanethiol (I, T)
U225	75-25-2	Methane, tribromo-
U044	67-66-3	Methane, trichloro-
U121	75-69-4	Methane, trichlorofluoro-
U036	57-74-9	4,7-Methano-1H-indene, 1,2,4,5,6,7,8,8-octachloro-2,3,3a,4,7,7a-hexahydro-
U154	67-56-1	Methanol (I)
U155	91-80-5	Methapyrilene
U142	143-50-0	1,3,4-Metheno-2H-cyclobuta[cd]pentalen-2-one, 1,1a,3,3a,4,5,5,5a,5b,6-decachlorooctahydro-
U247	72-43-5	Methoxychlor
U154	67-56-1	Methyl alcohol (I)
U029	74-83-9	Methyl bromide
U186	504-60-9	1-Methylbutadiene (I)
U045	74-87-3	Methyl chloride (I,T)
U156	79-22-1	Methyl chlorocarbonate (I,T)
U226	71-55-6	Methyl chloroform
U157	56-49-5	3-Methylcholanthrene
U158	101-14-4	4,4'-Methylenebis(2-chloroaniline)
U068	74-95-3	Methylene bromide
U080	75-09-2	Methylene chloride
U159	78-93-3	Methyl ethyl ketone (MEK) (I,T)
U160	1338-23-4	Methyl ethyl ketone peroxide (R,T)
U138	74-88-4	Methyl iodide
U161	108-10-1	Methyl isobutyl ketone (I)
U162	80-62-6	Methyl methacrylate (I,T)
U161	108-10-1	4-Methyl-2-pentanone (I)
U164	56-04-2	Methylthiouracil
U010	50-07-7	Mitomycin C
U059	20830-81-3	5,12-Naphthacenedione, 8-acetyl-10-[(3-amino-2,3,6-trideoxy)-alpha-L-lyxo-hexopyranosyl)oxy]-7,8,9,10-tetrahydro-6,8,11-trihydroxy-1-methoxy-, (8S-cis)-
U167	134-32-7	1-Naphthalenamine
U168	91-59-8	2-Naphthalenamine
U026	494-03-1	Naphthalenamine, N,N'-bis(2-chloroethyl)-
U165	91-20-3	Naphthalene
U047	91-58-7	Naphthalene, 2-chloro-
U166	130-15-4	1,4-Naphthalenedione
U236	72-57-1	2,7-Naphthalenedisulfonic acid, 3,3'-[(3,3'-dimethyl[1,1'-biphenyl]-4,4'-diyl)bis(azo)bis[5-amino-4-hydroxy]-, tetrasodium salt
U166	130-15-4	1,4-Naphthoquinone
U167	134-32-7	alpha-Naphthylamine
U168	91-59-8	beta-Naphthylamine
U217	10102-45-1	Nitric acid, thallium(1+) salt

Hazardous waste No.	Chemical abstracts No.	Substance
U169	98-95-3	Nitrobenzene (I,T)
U170	100-02-7	p-Nitrophenol
U171	79-46-9	2-Nitropropane (I,T)
U172	924-16-3	N-Nitrosodi-n-butylamine
U173	1116-54-7	N-Nitrosodiethanolamine
U174	55-18-5	N-Nitrosodiethylamine
U176	759-73-9	N-Nitroso-N-ethylurea
U177	684-93-5	N-Nitroso-N-methylurea
U178	615-53-2	N-Nitroso-N-methylurethane
U179	100-75-4	N-Nitrosopiperidine
U180	930-55-2	N-Nitrosopyrrolidine
U181	99-55-8	5-Nitro-o-toluidine
U193	1120-71-4	1,2-Oxathiolane, 2,2-dioxide
U058	50-18-0	2H-1,3,2-Oxazaphosphorin-2-amine, N,N-bis(2-chloroethyl)tetrahydro-, 2-oxide
U115	75-21-8	Oxirane (I,T)
U126	765-34-4	Oxiranecarboxyaldehyde
U041	106-89-8	Oxirane, (chloromethyl)-
U182	123-63-7	Paraldehyde
U183	608-93-5	Pentachlorobenzene
U184	76-01-7	Pentachloroethane
U185	82-68-8	Pentachloronitrobenzene (PCNB)
See F027	87-86-5	Pentachlorophenol
U161	108-10-1	Pentanol, 4-methyl-
U186	504-60-9	1,3-Pentadiene (I)
U187	62-44-2	Phenacetin
U188	108-95-2	Phenol
U048	95-57-8	Phenol, 2-chloro-
U039	59-50-7	Phenol, 4-chloro-3-methyl-
U081	120-83-2	Phenol, 2,4-dichloro-
U082	87-65-0	Phenol, 2,6-dichloro-
U089	56-53-1	Phenol, 4,4'-(1,2-diethyl-1,2-ethenediyl)bis-, (E)-
U101	105-67-9	Phenol, 2,4-dimethyl-
U052	1319-77-3	Phenol, methyl-
U132	70-30-4	Phenol, 2,2'-methylenebis[3,4,6-trichloro-
U170	100-02-7	Phenol, 4-nitro-
See F027	87-86-5	Phenol, pentachloro-
See F027	58-90-2	Phenol, 2,3,4,6-tetrachloro-
See F027	95-95-4	Phenol, 2,4,5-trichloro-
See F027	88-06-2	Phenol, 2,4,6-trichloro-
U150	148-82-3	L-Phenylalanine, 4-[bis(2-chloroethyl)amino]-
U145	7446-27-7	Phosphoric acid, lead(2+) salt (2:3)
U087	3288-58-2	Phosphorodithioic acid, O,O-diethyl S-methyl ester
U189	1314-80-3	Phosphorus sulfide (R)
U190	85-44-9	Phthalic anhydride
U191	109-06-8	2-Picoline
U179	100-75-4	Piperidine, 1-nitroso-
U192	23950-58-5	Pronamide
U194	107-10-8	1-Propanamine (I,T)
U111	621-64-7	1-Propanamine, N-nitroso-N-propyl-
U110	142-84-7	1-Propanamine, N-propyl- (I)
U066	96-12-8	Propane, 1,2-dibromo-3-chloro-
U083	78-87-5	Propane, 1,2-dichloro-
U149	109-77-3	Propanedinitrile
U171	79-46-9	Propane, 2-nitro- (I,T)
U027	108-60-1	Propane, 2,2'-oxybis[2-chloro-
U193	1120-71-4	1,3-Propane sultone
See F027	93-72-1	Propanoic acid, 2-(2,4,5-trichlorophenoxy)-
U235	126-72-7	1-Propanol, 2,3-dibromo-, phosphate (3:1)
U140	78-83-1	1-Propanol, 2-methyl- (I,T)
U002	67-64-1	2-Propanone (I)
U007	79-06-1	2-Propenamide
U084	542-75-6	1-Propene, 1,3-dichloro-
U243	1888-71-7	1-Propene, 1,1,2,3,3,3-hexachloro-

Hazardous waste No.	Chemical abstracts No.	Substance
U009	107-13-1	2-Propenenitrile
U152	126-98-7	2-Propenenitrile, 2-methyl- (I,T)
U008	79-10-7	2-Propenoic acid (I)
U113	140-88-5	2-Propenoic acid, ethyl ester (I)
U118	97-63-2	2-Propenoic acid, 2-methyl-, ethyl ester
U162	80-62-6	2-Propenoic acid, 2-methyl-, methyl ester (I,T)
U194	107-10-8	n-Propylamine (I,T)
U083	78-87-5	Propylene dichloride
U148	123-33-1	3,6-Pyridazinedione, 1,2-dihydro-
U196	110-86-1	Pyridine
U191	109-06-8	Pyridine, 2-methyl-
U237	66-75-1	2,4-(1H,3H)-Pyrimidinedione, 5-[bis(2-chloroethyl)amino]-
U164	56-04-2	4(1H)-Pyrimidinone, 2,3-dihydro-6-methyl-2-thioxo-
U180	930-55-2	Pyrrolidine, 1-nitroso-
U200	50-55-5	Reserpine
U201	108-46-3	Resorcinol
U202	[1] 81-07-2	Saccharin, & salts
U203	94-59-7	Safrole
U204	7783-00-8	Selenious acid
U204	7783-00-8	Selenium dioxide
U205	7488-56-4	Selenium sulfide
U205	7488-56-4	Selenium sulfide SeS_2 (R,T)
U015	115-02-6	L-Serine, diazoacetate (ester)
See F027	93-72-1	Silvex (2,4,5-TP)
U206	18883-66-4	Streptozotocin
U103	77-78-1	Sulfuric acid, dimethyl ester
U189	1314-80-3	Sulfur phosphide (R)
See F027	93-76-5	2,4,5-T
U207	95-94-3	1,2,4,5-Tetrachlorobenzene
U208	630-20-6	1,1,1,2-Tetrachloroethane
U209	79-34-5	1,1,2,2-Tetrachloroethane
U210	127-18-4	Tetrachloroethylene
See F027	58-90-2	2,3,4,6-Tetrachlorophenol
U213	109-99-9	Tetrahydrofuran (I)
U214	563-68-8	Thallium(I) acetate
U215	6533-73-9	Thallium(I) carbonate
U216	7791-12-0	Thallium(I) chloride
U216	7791-12-0	Thallium chloride TlCl
U217	10102-45-1	Thallium(I) nitrate
U218	62-55-5	Thioacetamide
U153	74-93-1	Thiomethanol (I,T)
U244	137-26-8	Thioperoxydicarbonic diamide $[(H_2N)C(S)]_2S_2$, tetramethyl-
U219	62-56-6	Thiourea
U244	137-26-8	Thiram
U220	108-88-3	Toluene
U221	25376-45-8	Toluenediamine
U223	26471-62-5	Toluene diisocyanate (R,T)
U328	95-53-4	o-Toluidine
U353	106-49-0	p-Toluidine
U222	636-21-5	o-Toluidine hydrochloride
U011	61-82-5	1H-1,2,4-Triazol-3-amine
U227	79-00-5	1,1,2-Trichloroethane
U228	79-01-6	Trichloroethylene
U121	75-69-4	Trichloromonofluoromethane
See F027	95-95-4	2,4,5-Trichlorophenol
See F027	88-06-2	2,4,6-Trichlorophenol
U234	99-35-4	1,3,5-Trinitrobenzene (R,T)
U182	123-63-7	1,3,5-Trioxane, 2,4,6-trimethyl-
U235	126-72-7	Tris(2,3-dibromopropyl) phosphate
U236	72-57-1	Trypan blue
U237	66-75-1	Uracil mustard
U176	759-73-9	Urea, N-ethyl-N-nitroso-
U177	684-93-5	Urea, N-methyl-N-nitroso-
U043	75-01-4	Vinyl chloride

Hazardous waste No.	Chemical abstracts No.	Substance
U246	[1] 81-81-2	Warfarin, & salts, when present at concentrations of 0.3% or less
U239	1330-20-7	Xylene (I)
U200	50-55-5	Yohimban-16-carboxylic acid, 11,17-dimethoxy-18-[(3,4,5-trimethoxybenzoyl)oxy]-, methyl ester, (3beta,16beta,17alpha,18beta,20alpha)-
U249	1314-84-7	Zinc phosphide Zn_3P_2, when present at concentrations of 10% or less

[1] CAS Number given for parent compound only.

(Approved by the Office of Management and Budget under control number 2050-0047)

[45 FR 78529, 78541, Nov. 25, 1980, as amended at 46 FR 27477, May 20, 1981; 49 FR 19923, May 10, 1984; 50 FR 2000, Jan. 14, 1985; 50 FR 28744, July 15, 1985; 50 FR 42942, Oct. 23, 1985; 51 FR 6541, Feb. 25, 1986; 51 FR 10175, Mar. 24, 1986; 51 FR 28298, Aug. 6, 1986; 52 FR 21306, June 5, 1987; 52 FR 26012, July 10, 1987; 53 FR 13383, 13384, Apr. 22, 1988]

Appendix I—Representative Sampling Methods

The methods and equipment used for sampling waste materials will vary with the form and consistency of the waste materials to be sampled. Samples collected using the sampling protocols listed below, for sampling waste with properties similar to the indicated materials, will be considered by the Agency to be representative of the waste.

Extremely viscous liquid—ASTM Standard D140-70 Crushed or powdered material—ASTM Standard D346-75 Soil or rock-like material—ASTM Standard D420-69 Soil-like material—ASTM Standard D1452-65

Fly Ash-like material—ASTM Standard D2234-76 [ASTM Standards are available from ASTM, 1916 Race St., Philadelphia, PA 19103]

Containerized liquid wastes—"COLIWASA" described in "Test Methods for the Evaluation of Solid Waste, Physical/Chemical Methods," [a] U.S. Environmental Protection Agency, Office of Solid Waste, Washington, D.C. 20460. [Copies may be obtained from Solid Waste Information, U.S. Environmental Protection Agency, 26 W. St. Clair St., Cincinnati, Ohio 45268]

Liquid waste in pits, ponds, lagoons, and similar reservoirs.—"Pond Sampler" described in "Test Methods for the Evaluation of Solid Waste, Physical/Chemical Methods." [a]

This manual also contains additional information on application of these protocols.

[a] These methods are also described in "Samplers and Sampling Procedures for Hazardous Waste Streams," EPA 600/2-80-018, January 1980.

Appendix II—EP Toxicity Test Procedures

A. Extraction Procedure (EP)

1. A representative sample of the waste to be tested (minimum size 100 grams) shall be obtained using the methods specified in Appendix I or any other method capable of yielding a representative sample within the meaning of Part 260. [For detailed guidance on conducting the various aspects of the EP see "Test Methods for the Evaluation of Solid Waste, Physical/Chemical Methods" (incorporated by reference, see § 260.11).]

2. The sample shall be separated into its component liquid and solid phases using the method described in "Separation Procedure" below. If the solid residue [a] obtained using this method totals less than 0.5% of the original weight of the waste, the residue can be discarded and the operator shall treat the liquid phase as the extract and proceed immediately to Step 8.

$$\frac{(\text{weight of pad} + \text{solid}) - (\text{tare weight of pad})}{\text{initial weight of sample}} \times 100$$

3. The solid material obtained from the Separation Procedure shall be evaluated for its particle size. If the solid material has a surface area per gram of material equal to, or greater than, 3.1 cm^2 or passes through a 9.5 mm (0.375 inch) standard sieve, the operator shall proceed to Step 4. If the surface area is smaller or the particle size larger than specified above, the solid material shall be prepared for extraction by crushing, cutting or grinding the material so that it passes through a 9.5 mm (0.375 inch) sieve or, if the material is in a single piece, by subjecting the material to the "Structural Integrity Procedure" described below.

[a] The percent solids is determined by drying the filter pad at 80°C until it reaches constant weight and then calculating the percent solids using the following equation:

Percent solids =

4. The solid material obtained in Step 3 shall be weighed and placed in an extractor with 16 times its weight of deionized water. Do not allow the material to dry prior to weighing. For purposes of this test, an acceptable extractor is one which will impart sufficient agitation to the mixture to not only prevent stratification of the sample and extraction fluid but also insure that all sample surfaces are continuously brought into contact with well mixed extraction fluid.

5. After the solid material and deionized water are placed in the extractor, the operator shall begin agitation and measure the pH of the solution in the extractor. If the pH is greater than 5.0, the pH of the solution shall be decreased to 5.0 ± 0.2 by adding 0.5 N acetic acid. If the pH is equal to or less than 5.0, no acetic acid should be added. The pH of the solution shall be monitored, as described below, during the course of the extraction and if the pH rises above 5.2, 0.5N acetic acid shall be added to bring the pH down to 5.0 ± 0.2. However, in no event shall the aggregrate amount of acid added to the solution exceed 4 ml of acid per gram of solid. The mixture shall be agitated for 24 hours and maintained at 20°-40°C (68°-104°F) during this time. It is recommended that the operator monitor and adjust the pH during the course of the extraction with a device such as the Type 45-A pH Controller manufactured by Chemtrix, Inc., Hillsboro, Oregon 97123 or its equivalent, in conjunction with a metering pump and reservoir of 0.5N acetic acid. If such a system is not available, the following manual procedure shall be employed:

(a) A pH meter shall be calibrated in accordance with the manufacturer's specifications.

(b) The pH of the solution shall be checked and, if necessary, 0.5N acetic acid shall be manually added to the extractor until the pH reaches 5.0 ± 0.2. The pH of the solution shall be adjusted at 15, 30 and 60 minute intervals, moving to the next longer interval if the pH does not have to be adjusted more than 0.5N pH units.

(c) The adjustment procedure shall be continued for at least 6 hours.

(d) If at the end of the 24-hour extraction period, the pH of the solution is not below 5.2 and the maximum amount of acid (4 ml per gram of solids) has not been added, the pH shall be adjusted to 5.0 ± 0.2 and the extraction continued for an additional four hours, during which the pH shall be adjusted at one hour intervals.

6. At the end of the 24 hour extraction period, deionized water shall be added to the extractor in an amount determined by the following equation:

$V = (20)(W) - 16(W) - A$

V = ml deionized water to be added

W = weight in grams of solid charged to extractor

A = ml of 0.5N acetic acid added during extraction

7. The material in the extractor shall be separated into its component liquid and solid phases as described under "Separation Procedure."

8. The liquids resulting from Steps 2 and 7 shall be combined. This combined liquid (or the waste itself if it has less than ½ percent solids, as noted in Step 2) is the extract and shall be analyzed for the presence of any of the contaminants specified in Table I of § 261.24 using the Analytical Procedures designated below.

Separation Procedure

Equipment: A filter holder, designed for filtration media having a nominal pore size of 0.45 micrometers and capable of applying a 5.3 kg/cm^2 (75 psi) hydrostatic pressure to the solution being filtered, shall be used. For mixtures containing nonabsorptive solids, where separation can be effected without imposing a 5.3 kg/cm^2 pressure differential, vacuum filters employing a 0.45 micrometers filter media can be used. (For further guidance on filtration equipment or procedures see "Test Methods for Evaluating Solid Waste, Physical/Chemical Methods" incorporated by reference, see § 260.11). Procedure:[a]

(1) Following manufacturer's directions, the filter unit shall be assembled with a filter bed consisting of a 0.45 micrometer filter membrane. For difficult or slow to filter mixtures a prefilter bed consisting of the following prefilters in increasing pore size (0.65 micrometer membrane, fine glass

[a] This procedure is intended to result in separation of the "free" liquid portion of the waste from any solid matter having a particle size >0.45 μm. If the sample will not filter, various other separation techniques can be used to aid in the filtration. As described above, pressure filtration is employed to speed up the filtration process. This does not alter the nature of the separation. If liquid does not separate during filtration, the waste can be centrifuged. If separation occurs during centrifugation, the liquid portion (centrifugate) is filtered through the 0.45 μm filter prior to becoming mixed with the liquid portion of the waste obtained from the initial filtration. Any material that will not pass through the filter after centrifugation is considered a solid and is extracted.

fiber prefilter, and coarse glass fiber prefilter) can be used.

(ii) The waste shall be poured into the filtration unit.

(iii) The reservoir shall be slowly pressurized until liquid begins to flow from the filtrate outlet at which point the pressure in the filter shall be immediately lowered to 10-15 psig. Filtration shall be continued until liquid flow ceases.

(iv) The pressure shall be increased stepwise in 10 psi increments to 75 psig and filtration continued until flow ceases or the pressurizing gas begins to exit from the filtrate outlet.

(v) The filter unit shall be depressurized, the solid material removed and weighed and then transferred to the extraction apparatus, or, in the case of final filtration prior to analysis, discarded. Do not allow the material retained on the filter pad to dry prior to weighing.

(vi) The liquid phase shall be stored at 4°C for subsequent use in Step 8.

B. Structural Integrity Procedure

Equipment: A Structural Integrity Tester having a 3.18 cm (1.25 in.) diameter hammer weighing 0.33 kg (0.73 lbs.) and having a free fall of 15.24 cm (6 in.) shall be used. This device is available from Associated Design and Manufacturing Company, Alexandria, VA 22314, as Part No. 125, or it may be fabricated to meet the specifications shown in Figure 1.

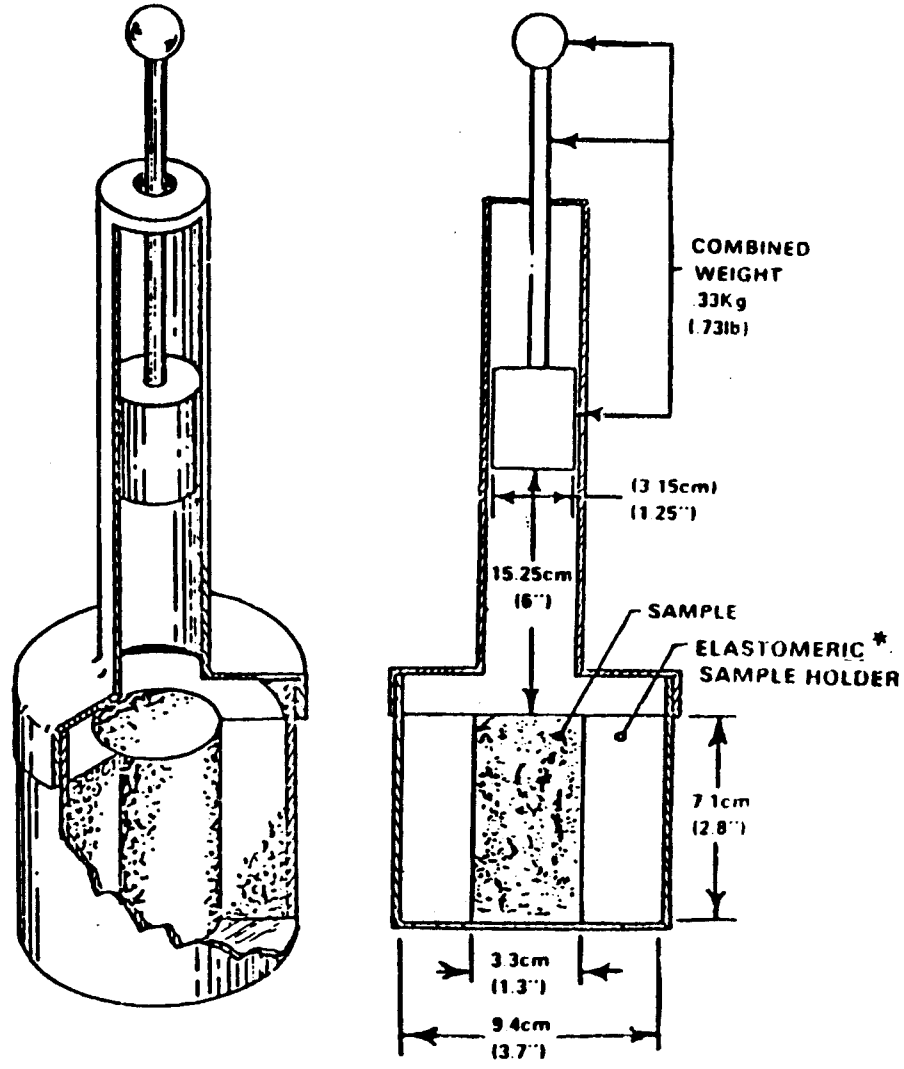

*ELASTOMERIC SAMPLE HOLDER FABRICATED OF MATERIAL FIRM ENOUGH TO SUPPORT THE SAMPLE

Figure 1

COMPACTION TESTER

Procedure

1. The sample holder shall be filled with the material to be tested. If the sample of waste is a large monolithic block, a portion shall be cut from the block having the dimensions of a 3.3 cm (1.3 in.) diameter x 7.1 cm (2.8 in.) cylinder. For a fixated waste, samples may be cast in the form of a 3.3 cm (1.3 in.) diameter x 7.1 cm (2.8 in.) cylinder for purposes of conducting this test. In such cases, the waste may be allowed to cure for 30 days prior to further testing.

2. The sample holder shall be placed into the Structural Integrity Tester, then the hammer shall be raised to its maximum height and dropped. This shall be repeated fifteen times.

3. The material shall be removed from the sample holder, weighed, and transferred to the extraction apparatus for extraction.

Analytical Procedures for Analyzing Extract Contaminants

The test methods for analyzing the extract are as follows:

1. For arsenic, barium, cadmium, chromium, lead, mercury, selenium, silver, endrin, lindane, methoxychlor, toxaphene, 2,4-D[2,4-dichlorophenoxyacetic acid] or 2,4,5-TP [2,4,5-trichlorophenoxypropionic acid]: "Test Methods for the Evaluation of Solid Waste, Physical/Chemical Methods" (incorporated by reference, see § 260.11).

2. [Reserved]

For all analyses, the methods of standard addition shall be used for quantification of species concentration.

[45 FR 33119, May 19, 1980, as amended at 46 FR 35247, July 7, 1981]

Appendix III—Chemical Analysis Test Methods

Tables 1, 2, and 3 specify the appropriate analytical procedures, described in "Test Methods for Evaluating Solid Waste, Physical/Chemical Methods," (incorporated by reference, see § 260.11) which shall be used to determine whether a sample contains a given Appendix VII or VIII toxic constituent.

Table 1 identifies each Appendix VII or VIII organic constituent along with the approved measurement method. Table 2 identifies the corresponding methods for inorganic species. Table 3 summarizes the contents of SW-846 and supplies specific section and method numbers for sampling and analysis methods.

Prior to final sampling and analysis method selection the analyst should consult the specific section or method described in SW-846 for additional guidance on which of the approved methods should be employed for a specific sample analysis situation.

TABLE 1—ANALYSIS METHODS FOR ORGANIC CHEMICALS CONTAINED IN SW-846

Compound	Method Numbers
Acetonitrile	8030, 8240
Acrolein	8030, 8240
Acrylamide	8015, 8240
Acrylonitrile	8030, 8240
2-Amino-l-methylbenzene (*o*-Toluidine)	8250
4-Amino-l-methylbenzene (*p*-Toluidine)	8250
Aniline	8250
Benzene	8020, 8024
Benz(a)anthracene	8100, 8250, 8310
Benzo(a)pyrene	8100, 8250, 8310
Benzotrichloride	8120, 8250
Benzyl chloride	8120, 8250
Benzo(b)fluoanthene	8100, 8250, 8310
Bis(2-chloroethoxymethane)	8010, 8240
Bis(2-chloroethyl)ether	8010, 8240
Bis(2-chloroisopropyl)ether	8010, 8240
Carbon disulfide	8015, 8240
Carbon tetrachloride	8010, 8240
Chlordane	8080, 8250
Chlorinated biphenyls	8080, 8250
Chlorinated dibenzo-*p*-dioxins	8280
Chlorinated dibenzofurans	8280
Chloroacetaldehyde	8010, 8240
Chlorobenzene	8020, 8240
Chloroform	8010, 8240
Chloromethane	8010, 8240
2-Chlorophenol	8040, 8250
Chrysene	8100, 8250, 8310
Creosote [1]	8100, 8250
Cresol(s)	8040, 8250
Cresylic Acid(s)	8040, 8250
Dichlorobenzene(s)	8010, 8120, 8250
Dichloroethane(s)	8010, 8240
Dichloromethane	8010, 8240
Dichlorophenoxyacetic acid	8150, 8250
Dichloropropanol	8120, 8250
2,4-Dimethylphenol	8040, 8250
Dinitrobenzene	8090, 8250
4,6-Dinitro-o-cresol	8040, 8250
2,4-Dinitrotoluene	8090, 8250
2,6-Dinitrotoluene	8090, 8250
Endrin	8080, 8250
2-Ethoxyethanol	8030, 8240
Ethyl ether	8015, 8240
Ethylene dibromide	8010, 8240
Ethylene thiourea	8250, 8330
Formaldehyde	8015, 8240
Formic acid	8250
Heptachlor	8080, 8250
Hexachlorobenzene	8120, 8250
Hexachlorobutadiene	8120, 8250
Hexachloroethane	8010, 8240
Hexachlorocyclopentadiene	8120, 8250
Lindane	8080, 8250
Maleic anhydride	8250
Methanol	8010, 8240
Methomyl	8250
Methyl ethyl ketone	8015, 8240
Methyl isobutyl ketone	8015, 8240
Napthalene	8100, 8250
Napthoquinone	8090, 8250
Nitrobenzene	8090, 8250
4-Nitrophenol	8040, 8240

TABLE 1—ANALYSIS METHODS FOR ORGANIC CHEMICALS CONTAINED IN SW-846—Continued

Compound	Method Numbers
2-Nitropropane	8030, 8240
Paraldehyde (trimer of acetaldehyde)	8015, 8240
Pentachlorophenol	8040, 8250
Phenol	8040, 8250
Phorate	8140
Phosphorodithioic acid esters	8140
Phthalic anhydride	8090, 8250
2-Picoline	8090, 8250
Pyridine	8090, 8250
Tetrachlorobenzene(s)	8120, 8250
Tetrachloroethane(s)	8010, 8240
Tetrachloroethene	8010, 8240
Tetrachlorophenol	8040, 8250
Toluene	8020, 8024
Toluene diisocyanate(s)	8250
Toluenediamine	8250
2,4-Toluenediamine	8250
2,6-Toluenediamine	8250
3,4-Toluenediamine	8250
Toxaphene	8080, 8250
Trichloroethane	8010, 8240
Trichloroethene(s)	8010, 8240
Trichlorofluoromethane	8010, 8240
Trichlorophenol(s)	8040, 8250
2,4,5-Trichlorophenoxy propionic acid	8150, 8250
Trichloropropane	8010, 8240
Vinyl chloride	8010, 8240
Vinylidene chloride	8010, 8240

TABLE 1—ANALYSIS METHODS FOR ORGANIC CHEMICALS CONTAINED IN SW-846—Continued

Compound	Method Numbers
Xylene	8020, 8240

[1] Analyne for phenanthrene and carbazole; if these are present in a ratio between 1.4:1 and 5:1 creosote should be considered present.

TABLE 2—ANALYSIS METHODS FOR INORGANIC CHEMICALS CONTAINED IN SW-846

Compound	First edition method(s)	Second edition method(s)
Antimony	6.50	7040, 7041
Arsenic	6.51	7060, 7061
Barium	6.52	7080, 7081
Cadmium	6.53	7090, 7091
Chromium	6.54	7190, 7191
Chromium: Hexavalent	6.545, 6.546, 6.547	7195, 7196, 7197
Lead	6.56	7420, 7421
Mercury	6.57	7470, 7471
Nickel	6.58	7520, 7521
Selenium	6.59	7740, 7741
Silver	6.60	7760, 7761
Cyanides	6.55	9010
Total Organic Halogen	6.66	9020
Sulfides	6.67	9030

TABLE 3—SAMPLING AND ANALYSIS METHODS CONTAINED IN SW-846

Title	First edition		Second edition	
	Section No.	Method No.	Section No.	Method No.
Sampling of Solid Wastes	1.0		1.0	
Development of Appropriate Sampling Plans	1.0		1.1	
Regulatory and Scientific Objectives	1.0–2		1.1.1	
Fundamental Statistical Concepts	1.0–3		1.1.2	
Basic Statistical Strategies	1.0–7		1.1.3	
Simple Random Sampling			1.1.3.1	
Stratified Random Sampling			1.1.3.2	
Systematic Random Sampling			1.1.3.3	
Special Considerations	1.0–7			
Composite Sampling			1.1.4.1	
Subsampling			1.1.4.2	
Cost and Loss Functions			1.1.4.3	
Implementation of Sampling Plan	1.0–7		1.2	
Selection of Sampling Equipment			1.2.1	
Composite Liquid Waste Sampler	3.2.1		1.2.1.1	
Weighted Bottle	3.2.2		1.2.1.2	
Dipper	3.2.3		1.2.1.3	
Thief	3.2.4		1.2.1.4	
Trier	3.2.5		1.2.1.5	
Auger	3.2.6		1.2.1.6	
Scoop and Shovel	3.2.7		1.2.1.7	
Selection of Sample Containers	3.3		1.2.2	
Processing and Storage of Samples	3.3		1.2.3	
Documentation of Chain of Custody	2.0		1.3	
Sample Labels	2.0–1		1.3.1	
Sample Seals	2.0–3		1.3.2	
Field Log Book	2.0–5		1.3.3	
Chain-of-Custody Record	2.0–6		1.3.4	

TABLE 3—SAMPLING AND ANALYSIS METHODS CONTAINED IN SW-846—Continued

Title	First edition		Second edition	
	Section No.	Method No.	Section No.	Method No.
Sample Analysis Request Sheet	2.0-9		1.3.5	
Sample Delivery to Laboratory	2.0-10		1.3.6	
Shipping of Samples	2.0-10		1.3.7	
Receipt and Logging of Sample	2.0-12		1.3.8	
Assignment of Sample for Analysis	2.0-13		1.3.9	
Sampling Methodology	3.0		1.4	
Containers	3.2-2		1.4.1	
Tanks	3.2-2		1.4.2	
Waste Piles	3.2-2		1.4.3	
Landfills and Lagoons	3.2-2		1.4.4	
Waste Evaluation Procedures			2.0	
Characteristics of Hazardous Waste			2.1	
Ignitability	4.0		2.1.1	
Pensky-Martens Closed-Cup Method	4.1		2.1.1	1010
Setaflash Closed-Cup Method	4.1		2.1.1	1020
Corrosivity	5.0		2.1.2	
Corrosivity Toward Steel	5.3		2.1.2	1110
Reactivity	6.0		2.1.3	
Extraction Procedure Toxicity	7.0		2.1.4	
Extraction Procedure Toxicity Test	7.1, 7.2, 7.5			
Method and Structural Integrity Test	7.4		2.1.4	1310
Sample Workup Techniques			4.0	
Inorganic Techniques	8.49		4.1	
Acid Digestion for Flame AAS	[1]		4.1	3010
Acid Digestion for Furnace AAS	[1]		4.1	3020
Acid Digestion of Oil, Grease, or Wax	8.49-9		4.1	3030
Dissolution Procedure for Oil, Grease or Wax	8.49-8			
Alkaline Digestion	8.0	8.458	4.1	3060
Organic Techniques	8.0		4.2	
Separatory Funnel Liquid-Liquid Extraction	9.0	9.1	4.2	3510
Continuous Liquid-Liquid Extraction	9.0	9.01	4.2	3520
Acid-Base Cleanup Extraction	8.0	8.84	4.2	3530
Soxhlet Extraction	8.0	8.66	4.2	3540
Sonication Extraction	8.0	8.85	4.2	3550
Sample Introduction Techniques			5.0	
Headspace	8.0	8.82	5.0	5020
Purge-and-Trap	8.0	8.83	5.0	5030
Inorganic Analytical Methods	8.0		7.0	
Antimony, Flame AAS	8.0	8.50	7.0	7470
Antimony, Furnace AAS	8.0	8.50	7.0	7471
Arsenic, Flame AAS	8.0	8.51	7.0	7060
Arsenic, Furnace AAS	8.0	8.51	7.0	7061
Barium, Flame AAS	8.0	8.52	7.0	7080
Barium, Furnace AAS	8.0	8.52	7.0	7081
Cadmium, Flame AAS	8.0	8.53	7.0	7130
Cadmium, Furnace AAS	8.0	8.53	7.0	7131
Chromium, Flame AAS	8.0	8.54	7.0	7090
Chromium, Furnace AAS	8.0	8.54	7.0	7191
Chromium, Hexavalent, Coprecipitation	8.0	8.545	7.0	7195
Chromium, Hexavalent, Colorimetric	8.0	8.546	7.0	7196
Chromium, Hexavalent, Chelation	8.0	8.547	7.0	7197
Lead, Flame AAS	8.0	8.56	7.0	7420
Lead, Furnace AAS	8.0	8.56	7.0	7421
Mercury, Cold Vapor, Liquid	8.0	8.57	7.0	7470
Mercury, Cold Vapor, Solid	8.0	8.57	7.0	7471
Nickel, Flame AAS	8.0	8.58	7.0	7520
Nickel, Furnace AAS	8.0	8.58	7.0	7521
Selenium, Flame AAS	8.0	8.59	7.0	7740
Selenium, Gaseous Hydride AAS	8.0	8.59	7.0	7741
Silver, Flame AAS	8.0	8.60	7.0	7760
Silver, Furnace AAS	8.0	8.60	7.0	7761
Organic Analytical Methods	8.0		8.0	
Gas Chromatographic Methods	8.0		8.1	
Halogenated Volatile Organics	8.0	8.01	8.1	8010
Nonhalogenated Volatile Organics	8.0	8.01	8.1	8015
Aromatic Volatile Organics	8.0	8.02	8.1	8020
Acrolein, Acrylonitrile, Acetonitrile	8.0	8.03	8.1	8030
Phenols	8.0	8.04	8.1	8040

TABLE 3—SAMPLING AND ANALYSIS METHODS CONTAINED IN SW-846—Continued

Title	First edition		Second edition	
	Section No.	Method No.	Section No.	Method No.
Phthalate Esters	8.0	8.06	8.1	8060
Organochlorine Pesticides and PCBs	8.0	8.08	8.1	8080
Nitroaromatics and Cyclic Ketones	8.0	8.09	8.1	8090
Polynuclear Aromatic Hydrocarbons	8.0	8.10	8.1	8100
Chlorinated Hydrocarbons	8.0	8.12	8.1	8120
Organophosphorus Pesticides	8.0	8.22	8.1	8140
Chlorinated Herbicides	8.0	8.40	8.1	8150
Gas Chromatographic/Mass Spectroscopy Methods (GC/MS)	8.0		8.2	
GC/MS Volatiles	8.0	8.24	8.2	8240
GC/MS Semi-Volatiles, Packed Column	8.0	8.25	8.2	8250
GC/MS Semi-Volatiles, Capillary	8.0	8.27	8.2	8270
Analysis of Chlorinated Dioxins and Dibenzofurans			8.2	8280
High Performance Liquid Chromatographic Methods (HPLC)	8.0		8.3	
Polynuclear Aromatic Hydrocarbons	8.0	8.10	8.3	8310
Miscellaneous Analytical Methods	8.0		9.0	
Cyanide; Total and Amenable to Chlorination	8.0	8.55	9.0	9010
Total Organic Halogen (TOX)	8.0	8.66	9.0	9020
Sulfides	8.0	8.67	9.0	9030
pH Measurement	5.0	5.2	9.0	9040
Quality Control/Quality Assurance	10.0		10.1	
Introduction	10.0		10.1	
Program Design	10.0		10.2	
Sampling	10.0		10.3	
Analysis	10.0		10.4	
Data Handling	10.0		10.5	

[1] See specific metal.

[48 FR 15257, Apr. 8, 1983, as amended at 50 FR 2000, Jan. 14, 1985; 50 FR 42942, Oct. 23, 1985; 51 FR 5330, Feb. 13, 1986; 51 FR 6541, Feb. 25, 1986; 51 FR 37729, Oct. 24, 1986]

APPENDIX IV—[RESERVED FOR RADIOACTIVE WASTE TEST METHODS]

APPENDIX V—[RESERVED FOR INFECTIOUS WASTE TREATMENT SPECIFICATIONS]

APPENDIX VI—[RESERVED FOR ETIOLOGIC AGENTS]

APPENDIX VII—BASIS FOR LISTING HAZARDOUS WASTE

EPA hazardous waste No.	Hazardous constituents for which listed
F001	Tetrachloroethylene, methylene chloride trichloroethylene, 1,1,1-trichloroethane, carbon tetrachloride, chlorinated fluorocarbons.
F002	Tetrachloroethylene, methylene chloride, trichloroethylene, 1,1,1-trichloroethane, 1,1,2-trichloroethane, chlorobenzene, 1,1,2-trichloro-1,2,2-trichlfluoroethane, ortho-dichlorobenzene, trichlorofluoromethane.
F003	N.A.
F004	Cresols and cresylic acid, nitrobenzene.
F005	Toluene, methyl ethyl ketone, carbon disulfide, isobutanol, pyridine, 2-ethoxyethanol, benzene, 2-nitropropane.
F006	Cadmium, hexavalent chromium, nickel, cyanide (complexed).
F007	Cyanide (salts).
F008	Cyanide (salts).
F009	Cyanide (salts).
F010	Cyanide (salts).
F011	Cyanide (salts).
F012	Cyanide (complexed).
F019	Hexavalent chromium, cyanide (complexed).
F020	Tetra- and pentachlorodibenzo-*p*-dioxins; tetra and pentachlorodi-benzofurans; tri- and tetrachlorophenols and their chlorophenoxy derivative acids, esters, ethers, amine and other salts.
F021	Penta- and hexachlorodibenzo-*p*-dioxins; penta- and hexachlorodibenzofurans; pentachlorophenol and its derivatives.
F022	Tetra-, penta-, and hexachlorodibenzo-*p*-dioxins; tetra-, penta-, and hexachlorodibenzofurans.
F023	Tetra-, and pentachlorodibenzo-*p*-dioxins; tetra- and pentachlorodibenzofurans; tri- and tetrachlorophenols and their chlorophenoxy derivative acids, esters, ethers, amine and other salts.

EPA hazardous waste No.	Hazardous constituents for which listed
F024	Chloromethane, dichloromethane, trichloromethane, carbon tetrachloride, chloroethylene, 1,1-dichloroethane, 1,2-dichloroethane, trans-1-2-dichloroethylene, 1,1-dichloroethylene, 1,1,1-trichloroethane, 1,1,2-trichloroethane, trichloroethylene, 1,1,1,2-tetra-chloroethane, 1,1,2,2-tetrachloroethane, tetrachloroethylene, pentachloroethane, hexachloroethane, allyl chloride (3-chloropropene), dichloropropane, dichloropropene, 2-chloro-1,3-butadiene, hexachloro-1,3-butadiene, hexachlorocyclopentadiene, hexachlorocyclohexane, benzene, chlorbenzene, dichlorobenzenes, 1,2,4-trichlorobenzene, tetrachlorobenzene, pentachlorobenzene, hexachlorobenzene, toluene, naphthalene.
F026	Tetra-, penta-, and hexachlorodibenzo-*p*-dioxins; tetra-, penta-, and hexachlorodibenzofurans.
F027	Tetra-, penta-, and hexachlorodibenzo-*p*-dioxins; tetra-, penta-, and hexachlorodibenzofurans; tri-, tetra-, and pentachlorophenols and their chlorophenoxy derivative acids, esters, ethers, amine and other salts.
F028	Tetra-, penta-, and hexachlorodibenzo-*p*-dioxins; tetra-, penta-, and hexachlorodibenzofurans; tri-, tetra-, and pentachlorophenols and their chlorophenoxy derivative acids, esters, ethers, amine and other salts.
K001	Pentachlorophenol, phenol, 2-chlorophenol, p-chloro-m-cresol, 2,4-dimethylphenyl, 2,4-dinitrophenol, trichlorophenols, tetrachlorophenols, 2,4-dinitrophenol, creosote, chrysene, naphthalene, fluoranthene, benzo(b)fluoranthene, benzo(a)pyrene, indeno(1,2,3-cd)pyrene, benz(a)anthracene, dibenz(a)anthracene, acenaphthalene.
K002	Hexavalent chromium, lead
K003	Hexavalent chromium, lead.
K004	Hexavalent chromium.
K005	Hexavalent chromium, lead.
K006	Hexavalent chromium.
K007	Cyanide (complexed), hexavalent chromium.
K008	Hexavalent chromium.
K009	Chloroform, formaldehyde, methylene chloride, methyl chloride, paraldehyde, formic acid.
K010	Chloroform, formaldehyde, methylene chloride, methyl chloride, paraldehyde, formic acid, chloroacetaldehyde.
K011	Acrylonitrile, acetonitrile, hydrocyanic acid.
K013	Hydrocyanic acid, acrylonitrile, acetonitrile.
K014	Acetonitrile, acrylamide.
K015	Benzyl chloride, chlorobenzene, toluene, benzotrichloride.
K016	Hexachlorobenzene, hexachlorobutadiene, carbon tetrachloride, hexachloroethane, perchloroethylene.
K017	Epichlorohydrin, chloroethers [bis(chloromethyl) ether and bis (2-chloroethyl) ethers], trichloropropane, dichloropropanols.
K018	1,2-dichloroethane, trichloroethylene, hexachlorobutadiene, hexachlorobenzene.
K019	Ethylene dichloride, 1,1,1-trichloroethane, 1,1,2-trichloroethane, tetrachloroethanes (1,1,2,2-tetrachloroethane and 1,1,1,2-tetrachloroethane), trichloroethylene, tetrachloroethylene, carbon tetrachloride, chloroform, vinyl chloride, vinylidene chloride.
K020	Ethylene dichloride, 1,1,1-trichloroethane, 1,1,2-trichloroethane, tetrachloroethanes (1,1,2,2-tetrachloroethane and 1,1,1,2-tetrachloroethane), trichloroethylene, tetrachloroethylene, carbon tetrachloride, chloroform, vinyl chloride, vinylidene chloride.
K021	Antimony, carbon tetrachloride, chloroform.
K022	Phenol, tars (polycyclic aromatic hydrocarbons).
K023	Phthalic anhydride, maleic anhydride.
K024	Phthalic anhydride, 1,4-naphthoquinone.
K025	Meta-dinitrobenzene, 2,4-dinitrotoluene.
K026	Paraldehyde, pyridines, 2-picoline.
K027	Toluene diisocyanate, toluene-2, 4-diamine.
K028	1,1,1-trichloroethane, vinyl chloride.
K029	1,2-dichloroethane, 1,1,1-trichloroethane, vinyl chloride, vinylidene chloride, chloroform.
K030	Hexachlorobenzene, hexachlorobutadiene, hexachloroethane, 1,1,1,2-tetrachloroethane, 1,1,2,2-tetrachloroethane, ethylene dichloride.
K031	Arsenic.
K032	Hexachlorocyclopentadiene.
K033	Hexachlorocyclopentadiene.
K034	Hexachlorocyclopentadiene.
K035	Creosote, chrysene, naphthalene, fluoranthene benzo(b) fluoranthene, benzo(a)pyrene, indeno(1,2,3-cd) pyrene, benzo(a)anthracene, dibenzo(a)anthracene, acenaphthalene.
K036	Toluene, phosphorodithioic and phosphorothioic acid esters.
K037	Toluene, phosphorodithioic and phosphorothioic acid esters.
K038	Phorate, formaldehyde, phosphorodithioic and phosphorothioic acid esters.
K039	Phosphorodithioic and phosphorothioic acid esters.
K040	Phorate, formaldehyde, phosphorodithioic and phosphorothioic acid esters.
K041	Toxaphene.
K042	Hexachlorobenzene, ortho-dichlorobenzene.
K043	2,4-dichlorophenol, 2,6-dichlorophenol, 2,4,6-trichlorophenol.
K044	N.A.
K045	N.A.
K046	Lead.
K047	N.A.
K048	Hexavalent chromium, lead.
K049	Hexavalent chromium, lead.
K050	Hexavalent chromium.
K051	Hexavalent chromium, lead.
K052	Lead.
K060	Cyanide, napthalene, phenolic compounds, arsenic.
K061	Hexavalent chromium, lead, cadmium.
K062	Hexavalent chromium, lead.
K069	Hexavalent chromium, lead, cadmium.
K071	Mercury.
K073	Chloroform, carbon tetrachloride, hexacholroethane, trichloroethane, tetrachloroethylene, dichloroethylene, 1,1,2,2-tetrachloroethane.
K083	Aniline, diphenylamine, nitrobenzene, phenylenediamine.
K084	Arsenic.
K085	Benzene, dichlorobenzenes, trichlorobenzenes, tetrachlorobenzenes, pentachlorobenzene, hexachlorobenzene, benzyl chloride.
K086	Lead, hexavalent chromium.
K087	Phenol, naphthalene.
K093	Phthalic anhydride, maleic anhydride.
K094	Phthalic anhydride.

EPA hazardous waste No.	Hazardous constituents for which listed
K095	1,1,2-trichloroethane, 1,1,1,2-tetrachloroethane, 1,1,2,2-tetrachloroethane.
K096	1,2-dichloroethane, 1,1,1-trichloroethane, 1,1,2-trichloroethane.
K097	Chlordane, heptachlor.
K098	Toxaphene.
K099	2,4-dichlorophenol, 2,4,6-trichlorophenol.
K100	Hexavalent chromium, lead, cadmium.
K101	Arsenic.
K102	Arsenic.
K103	Aniline, nitrobenzene, phenylenediamine.
K104	Aniline, benzene, diphenylamine, nitrobenzene, phenylenediamine.
K105	Benzene, monochlorobenzene, dichlorobenzenes, 2,4,6-trichlorophenol.
K106	Mercury.
K111	2,4-Dinitrotoluene.
K112	2,4-Toluenediamine, *o*-toluidine, *p*-toluidine, aniline.
K113	2,4-Toluenediamine, *o*-toluidine, *p*-toluidine, aniline.
K114	2,4-Toluenediamine, *o*-toluidine, *p*-toluidine.
K115	2,4-Toluenediamine.
K116	Carbon tetrachloride, tetrachloroethylene, chloroform, phosgene.
K117	Ethylene dibromide.
K118	Ethylene dibromide.
K123	Ethylene thiourea.
K124	Ethylene thiourea.
K125	Ethylene thiourea.
K126	Ethylene thiourea.
K136	Ethylene dibromide.

N.A.—Waste is hazardous because it fails the test for the characteristic of ignitability, corrosivity, or reactivity.

[46 FR 4619, Jan. 16, 1981, as amended at 46 FR 27477, May 20, 1981; 49 FR 5312, Feb. 10, 1984; 50 FR 2000, Jan. 14, 1985; 50 FR 42942, Oct. 23, 1985; 51 FR 5330, Feb. 13, 1986; 51 FR 6541, Feb. 25, 1986; 51 FR 37729, Oct. 24, 1986]

APPENDIX VIII—HAZARDOUS CONSTITUENTS

Common name	Chemical abstracts name	Chemical abstracts No.	Hazardous waste No.
Acetonitrile	Same	75-05-8	U003
Acetophenone	Ethanone, 1-phenyl-	98-86-2	U004
2-Acetylaminefluorene	Acetamide, N-9H-fluoren-2-yl-	53-96-3	U005
Acetyl chloride	Same	75-36-5	U006
1-Acetyl-2-thiourea	Acetamide, N-(aminothioxomethyl)-	591-08-2	P002
Acrolein	2-Propenal	107-02-8	P003
Acrylamide	2-Propenamide	79-06-1	U007
Acrylonitrile	2-Propenenitrile	107-13-1	U009
Aflatoxins	Same	1402-68-2	
Aldicarb	Propanal, 2-methyl-2-(methylthio)-, O-[(methylamino)carbonyl]oxime.	116-06-3	P070
Aldrin	1,4,5,8-Dimethanonaphthalene, 1,2,3,4,10,10-10-hexachloro-1,4,4a,5,8,8a-hexahydro-,(1alpha,4alpha,4abeta,5alpha,8alpha,8abeta)-.	309-00-2	P004
Allyl alcohol	2-Propen-1-ol	107-18-6	P005
Aluminum phosphide	Same	20859-73-8	P006
4-Aminobiphenyl	[1,1'-Biphenyl]-4-amine	92-67-1	
5-(Aminomethyl)-3-isoxazolol	3(2H)-Isoxazolone, 5-(aminomethyl)-	2763-96-4	P007
4-Aminopyridine	4-Pyridinamine	504-24-5	P008
Amitrole	1H-1,2,4-Triazol-3-amine	61-82-5	U011
Ammonium vanadate	Vanadic acid, ammonium salt	7803-55-6	P119
Aniline	Benzenamine	62-53-3	U012
Antimony	Same	7440-36-0	
Antimony compounds, N.O.S.[1]			
Aramite	Sulfurous acid, 2-chloroethyl 2-[4-(1,1-dimethylethyl)phenoxy]-1-methylethyl ester.	140-57-8	
Arsenic	Same	7440-38-2	
Arsenic compounds, N.O.S.[1]			
Arsenic acid	Arsenic acid H_3AsO_4	7778-39-4	P010
Arsenic pentoxide	Arsenic oxide As_2O_5	1303-28-2	P011
Arsenic trioxide	Arsenic oxide As_2O_3	1327-53-3	P012
Auramine	Benzenamine, 4,4'-carbonimidoylbis[N,N-dimethyl.	492-80-8	U014
Azaserine	L-Serine, diazoacetate (ester)	115-02-6	U015

Common name	Chemical abstracts name	Chemical abstracts No.	Hazardous waste No.
Barium	Same	7440-39-3	
Barium compounds, N.O.S.[1]			
Barium cyanide	Same	542-62-1	P013
Benz[c]acridine	Same	225-51-4	U016
Benz[a]anthracene	Same	56-55-3	U018
Benzal chloride	Benzene, (dichloromethyl)-	98-87-3	U017
Benzene	Same	71-43-2	U019
Benzenearsonic acid	Arsonic acid, phenyl-	98-05-5	
Benzidine	[1,1'-Biphenyl]-4,4'-diamine	92-87-5	U021
Benzo[b]fluoranthene	Benz[e]acephenanthrylene	205-99-2	
Benzo[j]fluoranthene	Same	205-82-3	
Benzo[a]pyrene	Same	50-32-8	U022
p-Benzoquinone	2,5-Cyclohexadiene-1,4-dione	106-51-4	U197
Benzotrichloride	Benzene, (trichloromethyl)-	98-07-7	U023
Benzyl chloride	Benzene, (chloromethyl)-	100-44-7	P028
Beryllium	Same	7440-41-7	P015
Beryllium compounds, N.O.S.[1]			
Bromoacetone	2-Propanone, 1-bromo-	598-31-2	P017
Bromoform	Methane, tribromo-	75-25-2	U225
4-Bromophenyl phenyl ether	Benzene, 1-bromo-4-phenoxy-	101-55-3	U030
Brucine	Strychnidin-10-one, 2,3-dimethoxy-	357-57-3	P018
Butyl benzyl phthalate	1,2-Benzenedicarboxylic acid, butyl phenylmethyl ester.	85-68-7	
Cacodylic acid	Arsinic acid, dimethyl-	75-60-5	U136
Cadmium	Same	7440-43-9	
Cadmium compounds, N.O.S.[1]			
Calcium chromate	Chromic acid H_2CrO_4, calcium salt	13765-19-0	U032
Calcium cyanide	Calcium cyanide $Ca(CN)_2$	592-01-8	P021
Carbon disulfide	Same	75-15-0	P022
Carbon oxyfluoride	Carbonic difluoride	353-50-4	U033
Carbon tetrachloride	Methane, tetrachloro-	56-23-5	U211
Chloral	Acetaldehyde, trichloro-	75-87-6	U034
Chlorambucil	Benzenebutanoic acid, 4-[bis(2-chloroethyl)amino]-.	305-03-3	U035
Chlordane	4,7-Methano-1H-indene, 1,2,4,5,6,7,8,8-octachloro-2,3,3a,4,7,7a-hexahydro-.	57-74-9	U036
Chlordane (alpha and gamma isomers)			U036
Chlorinated benzenes, N.O.S.[1]			
Chlorinated ethane, N.O.S.[1]			
Chlorinated fluorocarbons, N.O.S.[1]			
Chlorinated naphthalene, N.O.S.[1]			
Chlorinated phenol, N.O.S.[1]			
Chlornaphazin	Naphthalenamine, N,N'-bis(2-chloroethyl)-	494-03-1	U026
Chloroacetaldehyde	Acetaldehyde, chloro-	107-20-0	P023
Chloroalkyl ethers, N.O.S.[1]			
p-Chloroaniline	Benzenamine, 4-chloro-	106-47-8	P024
Chlorobenzene	Benzene, chloro-	108-90-7	U037
Chlorobenzilate	Benzeneacetic acid, 4-chloro-alpha-(4-chlorophenyl)-alpha-hydroxy-, ethyl ester.	510-15-6	U038
p-Chloro-m-cresol	Phenol, 4-chloro-3-methyl-	59-50-7	U039
2-Chloroethyl vinyl ether	Ethene, (2-chloroethoxy)-	110-75-8	U042
Chloroform	Methane, trichloro-	67-66-3	U044
Chloromethyl methyl ether	Methane, chloromethoxy-	107-30-2	U046
beta-Chloronaphthalene	Naphthalene, 2-chloro-	91-58-7	U047
o-Chlorophenol	Phenol, 2-chloro-	95-57-8	U048
1-(o-Chlorophenyl)thiourea	Thiourea, (2-chlorophenyl)-	5344-82-1	P026
Chloroprene	1,3-Butadiene, 2-chloro-	126-99-8	
3-Chloropropionitrile	Propanenitrile, 3-chloro-	542-76-7	P027
Chromium	Same	7440-47-3	
Chromium compounds, N.O.S.[1]			
Chrysene	Same	218-01-9	U050
Citrus red No. 2	2-Naphthalenol, 1-[(2,5-dimethoxyphenyl)azo]-.	6358-53-8	
Coal tar creosote	Same	8007-45-2	
Copper cyanide	Copper cyanide CuCN	544-92-3	P029
Creosote	Same		U051
Cresol (Cresylic acid)	Phenol, methyl-	1319-77-3	U052
Crotonaldehyde	2-Butenal	4170-30-3	U053
Cyanides (soluble salts and complexes) N.O.S.[1]			P030
Cyanogen	Ethanedinitrile	460-19-5	P031
Cyanogen bromide	Cyanogen bromide (CN)Br	506-68-3	U246

Common name	Chemical abstracts name	Chemical abstracts No.	Hazardous waste No.
Cyanogen chloride	Cyanogen chloride (CN)Cl	506-77-4	P033
Cycasin	beta-D-Glucopyranoside, (methyl-ONNazoxy)methyl.	14901-08-7	
2-Cyclohexyl-4,6-dinitrophenol	Phenol, 2-cyclohexyl-4,6-dinitro-	131-89-5	P034
Cyclophosphamide	2H-1,3,2-Oxazaphosphorin-2-amine, N,N-bis(2-chloroethyl)tetrahydro-, 2-oxide.	50-18-0	U058
2,4-D	Acetic acid, (2,4-dichlorophenoxy)-	94-75-7	U240
2,4-D, salts, esters			U240
Daunomycin	5,12-Naphthacenedione, 8-acetyl-10-[(3-amino-2,3,6-trideoxy-alpha-L-lyxo-hexopyranosyl)oxy]-7,8,9,10-tetrahydro-6,8,11-trihydroxy-1-methoxy-, (8S-cis)-.	20830-81-3	U059
DDD	Benzene, 1,1'-(2,2-dichloroethylidene)bis[4-chloro-.	72-54-8	U060
DDE	Benzene, 1,1'-(dichloroethenylidene)bis[4-chloro-.	72-55-9	
DDT	Benzene, 1,1'-(2,2,2-trichloroethylidene)bis[4-chloro-.	50-29-3	U061
Diallate	Carbamothioic acid, bis(1-methylethyl)-, S-(2,3-dichloro-2-propenyl) ester.	2303-16-4	U062
Dibenz[a,h]acridine	Same	226-36-8	
Dibenz[a,j]acridine	Same	224-42-0	
Dibenz[a,h]anthracene	Same	53-70-3	U063
7H-Dibenzo[c,g]carbazole	Same	194-59-2	
Dibenzo[a,e]pyrene	Naphtho[1,2,3,4-def]chrysene	192-65-4	
Dibenzo[a,h]pyrene	Dibenzo[b,def]chrysene	189-64-0	
Dibenzo[a,i]pyrene	Benzo[rst]pentaphene	189-55-9	U064
1,2-Dibromo-3-chloropropane	Propane, 1,2-dibromo-3-chloro-	96-12-8	U066
Dibutyl phthalate	1,2-Benzenedicarboxylic acid, dibutyl ester	84-74-2	U069
o-Dichlorobenzene	Benzene, 1,2-dichloro-	95-50-1	U070
m-Dichlorobenzene	Benzene, 1,3-dichloro-	541-73-1	U071
p-Dichlorobenzene	Benzene, 1,4-dichloro-	106-46-7	U072
Dichlorobenzene, N.O.S.[1]	Benzene, dichloro-	25321-22-6	
3,3'-Dichlorobenzidine	[1,1'-Biphenyl]-4,4'-diamine, 3,3'-dichloro-	91-94-1	U073
1,4-Dichloro-2-butene	2-Butene, 1,4-dichloro-	764-41-0	U074
Dichlorodifluoromethane	Methane, dichlorodifluoro-	75-71-8	U075
Dichloroethylene, N.O.S.[1]	Dichloroethylene	25323-30-2	
1,1-Dichloroethylene	Ethene, 1,1-dichloro-	75-35-4	U078
1,2-Dichloroethylene	Ethene, 1,2-dichloro-, (E)-	156-60-5	U079
Dichloroethyl ether	Ethane, 1,1'-oxybis[2-chloro-	111-44-4	U025
Dichloroisopropyl ether	Propane, 2,2'-oxybis[2-chloro-	108-60-1	U027
Dichloromethoxy ethane	Ethane, 1,1'-[methylenebis(oxy)]bis[2-chloro-.	111-91-1	U024
Dichloromethyl ether	Methane, oxybis[chloro-	542-88-1	P016
2,4-Dichlorophenol	Phenol, 2,4-dichloro-	120-83-2	U081
2,6-Dichlorophenol	Phenol, 2,6-dichloro-	87-65-0	U082
Dichlorophenylarsine	Arsonous dichloride, phenyl-	696-28-6	P036
Dichloropropane, N.O.S.[1]	Propane, dichloro-	26638-19-7	
Dichloropropanol, N.O.S.[1]	Propanol, dichloro-	26545-73-3	
Dichloropropene, N.O.S.[1]	1-Propene, dichloro-	26952-23-8	
1,3-Dichloropropene	1-Propene, 1,3-dichloro-	542-75-6	U084
Dieldrin	2,7:3,6-Dimethanonaphth[2,3-b]oxirene, 3,4,5,6,9,9-hexachloro-1a,2,2a,3,6,6a,7,7a-octahydro-, (1aalpha,2beta,2aalpha,3beta,6beta,6aalpha,7beta,7aalpha)-.	60-57-1	P037
1,2:3,4-Diepoxybutane	2,2'-Bioxirane	1464-53-5	U085
Diethylarsine	Arsine, diethyl-	692-42-2	P038
1,4-Diethyleneoxide	1,4-Dioxane	123-91-1	U108
Diethylhexyl phthalate	1,2-Benzenedicarboxylic acid, bis(2-ethylhexyl) ester.	117-81-7	U028
N,N'-Diethylhydrazine	Hydrazine, 1,2-diethyl-	1615-80-1	U086
O,O-Diethyl S-methyl dithiophosphate	Phosphorodithioic acid, O,O-diethyl S-methyl ester.	3288-58-2	U087
Diethyl-p-nitrophenyl phosphate	Phosphoric acid, diethyl 4-nitrophenyl ester	311-45-5	P041
Diethyl phthalate	1,2-Benzenedicarboxylic acid, diethyl ester	84-66-2	U088
O,O-Diethyl O-pyrazinyl phosphoro- thioate	Phosphorothioic acid, O,O-diethyl O-pyrazinyl ester.	297-97-2	P040
Diethylstilbesterol	Phenol, 4,4'-(1,2-diethyl-1,2-ethenediyl)bis-, (E)-.	56-53-1	U089
Dihydrosafrole	1,3-Benzodioxole, 5-propyl-	94-58-6	U090
Diisopropylfluorophosphate (DFP)	Phosphorofluoridic acid, bis(1-methylethyl) ester.	55-91-4	P043

Common name	Chemical abstracts name	Chemical abstracts No.	Hazardous waste No.
Dimethoate	Phosphorodithioic acid, O,O-dimethyl S-[2-(methylamino)-2-oxoethyl] ester.	60-51-5	P044
3,3'-Dimethoxybenzidine	[1,1'-Biphenyl]-4,4'-diamine, 3,3'-dimethoxy-	119-90-4	U091
p-Dimethylaminoazobenzene	Benzenamine, N,N-dimethyl-4-(phenylazo)-	60-11-7	U093
7,12-Dimethylbenz[a]anthracene	Benz[a]anthracene, 7,12-dimethyl-	57-97-6	U094
3,3'-Dimethylbenzidine	[1,1'-Biphenyl]-4,4'-diamine, 3,3'-dimethyl-	119-93-7	U095
Dimethylcarbamoyl chloride	Carbamic chloride, dimethyl-	79-44-7	U097
1,1-Dimethylhydrazine	Hydrazine, 1,1-dimethyl-	57-14-7	U098
1,2-Dimethylhydrazine	Hydrazine, 1,2-dimethyl-	540-73-8	U099
alpha,alpha-Dimethylphenethylamine	Benzeneethanamine, alpha,alpha-dimethyl-	122-09-8	P046
2,4-Dimethylphenol	Phenol, 2,4-dimethyl-	105-67-9	U101
Dimethyl phthalate	1,2-Benzenedicarboxylic acid, dimethyl ester	131-11-3	U102
Dimethyl sulfate	Sulfuric acid, dimethyl ester	77-78-1	U103
Dinitrobenzene, N.O.S.[1]	Benzene, dinitro-	25154-54-5	
4,6-Dinitro-o-cresol	Phenol, 2-methyl-4,6-dinitro-	534-52-1	P047
4,6-Dinitro-o-cresol salts			P047
2,4-Dinitrophenol	Phenol, 2,4-dinitro-	51-28-5	P048
2,4-Dinitrotoluene	Benzene, 1-methyl-2,4-dinitro-	121-14-2	U105
2,6-Dinitrotoluene	Benzene, 2-methyl-1,3-dinitro-	606-20-2	U106
Dinoseb	Phenol, 2-(1-methylpropyl)-4,6-dinitro-	88-85-7	P020
Di-n-octyl phthalate	1,2-Benzenedicarboxylic acid, dioctyl ester	117-84-0	U017
Diphenylamine	Benzenamine, N-phenyl-	122-39-4	
1,2-Diphenylhydrazine	Hydrazine, 1,2-diphenyl-	122-66-7	U109
Di-n-propylnitrosamine	1-Propanamine, N-nitroso-N-propyl-	621-64-7	U111
Disulfoton	Phosphorodithioic acid, O,O-diethyl S-[2-(ethylthio)ethyl] ester.	298-04-4	P039
Dithiobiuret	Thioimidodicarbonic diamide [$(H_2N)C(S)]_2NH$.	541-53-7	P049
Endosulfan	6,9-Methano-2,4,3-benzodioxathiepin, 6,7,8,9,10,10-hexachloro-1,5,5a,6,9,9a-hexahydro-, 3-oxide.	115-29-7	P050
Endothall	7-Oxabicyclo[2.2.1]heptane-2,3-dicarboxylic acid.	145-73-3	P088
Endrin	2,7:3,6-Dimethanonaphth[2,3-b]oxirene, 3,4,5,6,9,9-hexachloro-1a,2,2a,3,6,6a,7,7a-octa-hydro-, (1aalpha,2beta,2abeta,3alpha,6alpha, 6abeta,7beta,7aalpha)-.	72-20-8	P051
Endrin metabolites			P051
Epichlorohydrin	Oxirane, (chloromethyl)-	106-89-8	U041
Epinephrine	1,2-Benzenediol, 4-[1-hydroxy-2-(methylamino)ethyl]-, (R)-.	51-43-4	P042
Ethyl carbamate (urethane)	Carbamic acid, ethyl ester	51-79-6	U238
Ethyl cyanide	Propanenitrile	107-12-0	P101
Ethylenebisdithiocarbamic acid	Carbamodithioic acid, 1,2-ethanediylbis-	111-54-6	U114
Ethylenebisdithiocarbamic acid, salts and esters.			U114
Ethylene dibromide	Ethane, 1,2-dibromo-	106-93-4	U067
Ethylene dichloride	Ethane, 1,2-dichloro-	107-06-2	U077
Ethylene glycol monoethyl ether	Ethanol, 2-ethoxy-	110-80-5	U359
Ethyleneimine	Aziridine	151-56-4	P054
Ethylene oxide	Oxirane	75-21-8	U115
Ethylenethiourea	2-Imidazolidinethione	96-45-7	U116
Ethylidene dichloride	Ethane, 1,1-dichloro-	75-34-3	U076
Ethyl methacrylate	2-Propenoic acid, 2-methyl-, ethyl ester	97-63-2	U118
Ethyl methanesulfonate	Methanesulfonic acid, ethyl ester	62-50-0	U119
Famphur	Phosphorothioic acid, O-[4-[(dimethylamino)sulfonyl]phenyl] O,O-dimethyl ester.	52-85-7	P097
Fluoranthene	Same	206-44-0	U120
Fluorine	Same	7782-41-4	P056
Fluoroacetamide	Acetamide, 2-fluoro-	640-19-7	P057
Fluoroacetic acid, sodium salt	Acetic acid, fluoro-, sodium salt	62-74-8	P058
Formaldehyde	Same	50-00-0	U122
Formic acid	Same	64-18-6	U123
Glycidylaldehyde	Oxiranecarboxyaldehyde	765-34-4	U126
Halomethanes, N.O.S.[1]			
Heptachlor	4,7-Methano-1H-indene, 1,4,5,6,7,8,8-heptachloro-3a,4,7,7a-tetrahydro-.	76-44-8	P059
Heptachlor epoxide	2,5-Methano-2H-indeno[1,2-b]oxirene, 2,3,4,5,6,7,7-heptachloro-1a,1b,5,5a,6,6a-hexa- hydro-, (1aalpha,1bbeta,2alpha,5alpha,5abeta, 6beta,6aalpha)-.	1024-57-3	

Common name	Chemical abstracts name	Chemical abstracts No.	Hazardous waste No.
Heptachlor epoxide (alpha, beta, and gamma isomers).			
Hexachlorobenzene	Benzene, hexachloro-	118-74-1	U127
Hexachlorobutadiene	1,3-Butadiene, 1,1,2,3,4,4-hexachloro-	87-68-3	U128
Hexachlorocyclopentadiene	1,3-Cyclopentadiene, 1,2,3,4,5,5-hexachloro-	77-47-4	U130
Hexachlorodibenzo-p-dioxins			
Hexachlorodibenzofurans			
Hexachloroethane	Ethane, hexachloro-	67-72-1	U131
Hexachlorophene	Phenol, 2,2'-methylenebis[3,4,6-trichloro-	70-30-4	U132
Hexachloropropene	1-Propene, 1,1,2,3,3,3-hexachloro-	1888-71-7	U243
Hexaethyl tetraphosphate	Tetraphosphoric acid, hexaethyl ester	757-58-4	P062
Hydrazine	Same	302-01-2	U133
Hydrogen cyanide	Hydrocyanic acid	74-90-8	P063
Hydrogen fluoride	Hydrofluoric acid	7664-39-3	U134
Hydrogen sulfide	Hydrogen sulfide H_2S	7783-06-4	U135
Indeno[1,2,3-cd]pyrene	Same	193-39-5	U137
Iron dextran	Same	9004-66-4	U139
Isobutyl alcohol	1-Propanol, 2-methyl-	78-83-1	U140
Isodrin	1,4,5,8-Dimethanonaphthalene, 1,2,3,4,10,10-hexachloro-1,4,4a,5,8,8a-hexahydro-, (1alpha,4alpha,4abeta,5beta,8beta,8abeta)-	465-73-6	P060
Isosafrole	1,3-Benzodioxole, 5-(1-propenyl)-	120-58-1	U141
Kepone	1,3,4-Metheno-2H-cyclobuta[cd]pentalen-2-one, 1,1a,3,3a,4,5,5,5a,5b,6-decachlorooctahydro-.	143-50-0	U142
Lasiocarpine	2-Butenoic acid, 2-methyl-,7-[[2,3-dihydroxy-2-(1-methoxyethyl)-3-methyl-1-oxobutoxy]methyl]-2,3,5,7a-tetrahydro-1H-pyrrolizin-1-yl ester, [1S-[1alpha(Z),7(2S*,3R*),7aalpha]]-	303-34-1	4143
Lead	Same	7439-92-1	
Lead compounds, N.O.S.[1]			
Lead acetate	Acetic acid, lead(2+) salt	301-04-2	U144
Lead phosphate	Phosphoric acid, lead(2+) salt (2:3)	7446-27-7	U145
Lead subacetate	Lead, bis(acetato-O)tetrahydroxytri-	1335-32-6	U146
Lindane	Cyclohexane, 1,2,3,4,5,6-hexachloro-, (1alpha,2alpha,3beta,4alpha,5alpha,6beta)-	58-89-9	U129
Maleic anhydride	2,5-Furandione	108-31-6	U147
Maleic hydrazide	3,6-Pyridazinedione, 1,2-dihydro-	123-33-1	U148
Malononitrile	Propanedinitrile	109-77-3	U149
Melphalan	L-Phenylalanine, 4-[bis(2-chloroethyl)amino]-.	148-82-3	U150
Mercury	Same	7439-97-6	U151
Mercury compounds, N.O.S.[1]			
Mercury fulminate	Fulminic acid, mercury(2+) salt	628-86-4	P065
Methacrylonitrile	2-Propenenitrile, 2-methyl-	126-98-7	U152
Methapyrilene	1,2-Ethanediamine, N,N-dimethyl-N'-2-pyridinyl-N'-(2-thienylmethyl)-.	91-80-5	U155
Methomyl	Ethanimidothioic acid, N-[[(methylamino)carbonyl]oxy]-, methyl ester.	16752-77-5	P066
Methoxychlor	Benzene, 1,1'-(2,2,2-trichloroethylidene)bis[4-methoxy-.	72-43-5	U247
Methyl bromide	Methane, bromo-	74-83-9	U029
Methyl chloride	Methane, chloro-	74-87-3	U045
Methyl chlorocarbonate	Carbonochloridic acid, methyl ester	79-22-1	U156
Methyl chloroform	Ethane, 1,1,1-trichloro-	71-55-6	U226
3-Methylcholanthrene	Benz[j]aceanthrylene, 1,2-dihydro-3-methyl-	56-49-5	U157
4,4'-Methylenebis(2-chloroaniline)	Benzenamine, 4,4'-methylenebis[2-chloro-	101-14-4	U158
Methylene bromide	Methane, dibromo-	74-95-3	U068
Methylene chloride	Methane, dichloro-	75-09-2	U080
Methyl ethyl ketone (MEK)	2-Butanone	78-93-3	U159
Methyl ethyl ketone peroxide	2-Butanone, peroxide	1338-23-4	U160
Methyl hydrazine	Hydrazine, methyl-	60-34-4	P068
Methyl iodide	Methane, iodo-	74-88-4	U138
Methyl isocyanate	Methane, isocyanato-	624-83-9	P064
2-Methylactionitrile	Propanenitrile, 2-hydroxy-2-methyl-	75-86-5	P069
Methyl methacrylate	2-Propenoic acid, 2-methyl-, methyl ester	80-62-6	U162
Methyl methanesulfonate	Methanesulfonic acid, methyl ester	66-27-3	
Methyl parathion	Phosphorothioic acid, O,O-dimethyl O-(4-nitrophenyl) ester.	298-00-0	P071

Common name	Chemical abstracts name	Chemical abstracts No.	Hazardous waste No.
Methylthiouracil	4(1H)-Pyrimidinone, 2,3-dihydro-6-methyl-2-thioxo-.	56-04-2	U164
Mitomycin C	Azirino[2',3':3,4]pyrrolo[1,2-a]indole-4,7-dione, 6-amino-8-[[(aminocarbonyl)oxy]methyl]-1,1a,2,8,8a,8b-hexahydro-8a-methoxy-5-methyl-, [1aS-(1aalpha,8beta,8aalpha,8balpha)]-.	50-07-7	U010
MNNG	Guanidine, N-methyl-N'-nitro-N-nitroso-	70-25-7	U163
Mustard gas	Ethane, 1,1'-thiobis[2-chloro-	505-60-2	
Naphthalene	Same	91-20-3	U165
1,4-Naphthoquinone	1,4-Naphthalenedione	130-15-4	U166
alpha-Naphthylamine	1-Naphthalenamine	134-32-7	U167
beta-Naphthylamine	2-Naphthalenamine	91-59-8	U168
alpha-Naphthylthiourea	Thiourea, 1-naphthalenyl-	86-88-4	P072
Nickel	Same	7440-02-0	
Nickel compounds, N.O.S.[1]			
Nickel carbonyl	Nickel carbonyl $Ni(CO)_4$, (T-4)-	13463-39-3	P073
Nickel cyanide	Nickel cyanide $Ni(CN)_2$	557-19-7	P074
Nicotine	Pyridine, 3-(1-methyl-2-pyrrolidinyl)-, (S)-	54-11-5	P075
Nicotine salts			P075
Nitric oxide	Nitrogen oxide NO	10102-43-9	P076
p-Nitroaniline	Benzenamine, 4-nitro-	100-01-6	P077
Nitrobenzene	Benzene, nitro-	98-95-3	U169
Nitrogen dioxide	Nitrogen oxide NO_2	10102-44-0	P078
Nitrogen mustard	Ethanamine, 2-chloro-N-(2-chloroethyl)-N-methyl-.	51-75-2	
Nitrogen mustard, hydrochloride salt			
Nitrogen mustard N-oxide	Ethanamine, 2-chloro-N-(2-chloroethyl)-N-methyl-, N-oxide.	126-85-2	
Nitrogen mustard, N-oxide, hydro- chloride salt.			
Nitroglycerin	1,2,3-Propanetriol, trinitrate	55-63-0	P081
p-Nitrophenol	Phenol, 4-nitro-	100-02-7	U170
2-Nitropropane	Propane, 2-nitro-	79-46-9	U171
Nitrosamines, N.O.S.[1]		35576-91-1D	
N-Nitrosodi-n-butylamine	1-Butanamine, N-butyl-N-nitroso-	924-16-3	U172
N-Nitrosodiethanolamine	Ethanol, 2,2'-(nitrosoimino)bis-	1116-54-7	U173
N-Nitrosodiethylamine	Ethanamine, N-ethyl-N-nitroso-	55-18-5	U174
N-Nitrosodimethylamine	Methanamine, N-methyl-N-nitroso-	62-75-9	P082
N-Nitroso-N-ethylurea	Urea, N-ethyl-N-nitroso-	759-73-9	U176
N-Nitrosomethylethylamine	Ethanamine, N-methyl-N-nitroso-	10595-95-6	
N-Nitroso-N-methylurea	Urea, N-methyl-N-nitroso-	684-93-5	U177
N-Nitroso-N-methylurethane	Carbamic acid, methylnitroso-, ethyl ester	615-53-2	U178
N-Nitrosomethylvinylamine	Vinylamine, N-methyl-N-nitroso-	4549-40-0	P084
N-Nitrosomorpholine	Morpholine, 4-nitroso-	59-89-2	
N-Nitrosonornicotine	Pyridine, 3-(1-nitroso-2-pyrrolidinyl)-, (S)-	16543-55-8	
N-Nitrosopiperidine	Piperidine, 1-nitroso-	100-75-4	U179
N-Nitrosopyrrolidine	Pyrrolidine, 1-nitroso-	930-55-2	U180
N-Nitrososarcosine	Glycine, N-methyl-N-nitroso-	13256-22-9	
5-Nitro-o-toluidine	Benzenamine, 2-methyl-5-nitro-	99-55-8	U181
Octamethylpyrophosphoramide	Diphosphoramide, octamethyl-	152-16-9	P085
Osmium tetroxide	Osmium oxide OsO_4, (T-4)-	20816-12-0	P087
Paraldehyde	1,3,5-Trioxane, 2,4,6-trimethyl-	123-63-7	U182
Parathion	Phosphorothioic acid, O,O-diethyl O-(4-nitrophenyl) ester.	56-38-2	P089
Pentachlorobenzene	Benzene, pentachloro-	608-93-5	U183
Pentachlorodibenzo-p-dioxins			
Pentachlorodibenzofurans			
Pentachloroethane	Ethane, pentachloro-	76-01-7	U184
Pentachloronitrobenzene (PCNB)	Benzene, pentachloronitro-	82-68-8	U185
Pentachlorophenol	Phenol, pentachloro-	87-86-5	See F027
Phenacetin	Acetamide, N-(4-ethoxyphenyl)-	62-44-2	U187
Phenol	Same	108-95-2	U188
Phenylenediamine	Benzenediamine	25265-76-3	
Phenylmercury acetate	Mercury, (acetato-O)phenyl-	62-38-4	P092
Phenylthiourea	Thiourea, phenyl-	103-85-5	P093
Phosgene	Carbonic dichloride	75-44-5	P095
Phosphine	Same	7803-51-2	P096
Phorate	Phosphorodithioic acid, O,O-diethyl S-[(ethylthio)methyl] ester.	298-02-2	P094
Phthalic acid esters, N.O.S.[1]			

Common name	Chemical abstracts name	Chemical abstracts No.	Hazardous waste No.
Phthalic anhydride	1,3-Isobenzofurandione	85-44-9	U190
2-Picoline	Pyridine, 2-methyl-	109-06-8	U191
Polychlorinated biphenyls, N.O.S.[1]			
Potassium cyanide	Potassium cyanide K(CN)	151-50-8	P098
Potassium silver cyanide	Argentate(1-), bis(cyano-C)-, potassium	506-61-6	P099
Pronamide	Benzamide, 3,5-dichloro-N-(1,1-dimethyl-2-propynyl)-.	23950-58-5	U192
1,3-Propane sultone	1,2-Oxathiolane, 2,2-dioxide	1120-71-4	U193
n-Propylamine	1-Propanamine	107-10-8	U194
Propargyl alcohol	2-Propyn-1-ol	107-19-7	P102
Propylene dichloride	Propane, 1,2-dichloro-	78-87-5	U083
1,2-Propylenimine	Aziridine, 2-methyl-	75-55-8	P067
Propylthiouracil	4(1H)-Pyrimidinone, 2,3-dihydro-6-propyl-2-thioxo-.	51-52-5	
Pyridine	Same	110-86-1	U196
Reserpine	Yohimban-16-carboxylic acid, 11,17-dimethoxy-18-[(3,4,5-trimethoxybenzoyl)oxy]-smethyl ester, (3beta,16beta,17alpha,18beta,20alpha)-.	50-55-5	U200
Resorcinol	1,3-Benzenediol	108-46-3	U201
Saccharin	1,2-Benzisothiazol-3(2H)-one, 1,1-dioxide	81-07-2	U202
Saccharin salts			U202
Safrole	1,3-Benzodioxole, 5-(2-propenyl)-	94-59-7	U203
Selenium	Same	7782-49-2	
Selenium compounds, N.O.S.[1]			
Selenium dioxide	Selenious acid	7783-00-8	U204
Selenium sulfide	Selenium sulfide SeS_2	7488-56-4	U205
Selenourea	Same	630-10-4	P103
Silver	Same	7440-22-4	
Silver compounds, N.O.S.[1]			
Silver cyanide	Silver cyanide Ag(CN)	506-64-9	P104
Silvex (2,4,5-TP)	Propanoic acid, 2-(2,4,5-trichlorophenoxy)-	93-72-1	See F027
Sodium cyanide	Sodium cyanide Na(CN)	143-33-9	P106
Streptozotocin	D-Glucose, 2-deoxy-2-[[(methylnitrosoamino)carbonyl]amino]-.	18883-66-4	U206
Strontium sulfide	Strontium sulfide SrS	1314-96-1	P107
Strychnine	Strychnidin-10-one	57-24-9	P108
Strychnine salts			P108
TCDD	Dibenzo[b,e][1,4]dioxin, 2,3,7,8-tetrachloro-	1746-01-6	
1,2,4,5-Tetrachlorobenzene	Benzene, 1,2,4,5-tetrachloro-	95-94-3	U207
Tetrachlorodibenzo-p-dioxins			
Tetrachlorodibenzofurans			
Tetrachloroethane, N.O.S.[1]	Ethane, tetrachloro-, N.O.S.	25322-20-7	
1,1,1,2-Tetrachloroethane	Ethane, 1,1,1,2-tetrachloro-	630-20-6	U208
1,1,2,2-Tetrachloroethane	Ethane, 1,1,2,2-tetrachloro-	79-34-5	U209
Tetrachloroethylene	Ethene, tetrachloro-	127-18-4	U210
2,3,4,6-Tetrachlorophenol	Phenol, 2,3,4,6-tetrachloro-	58-90-2	See F027
Tetraethyldithiopyrophosphate	Thiodiphosphoric acid, tetraethyl ester	3689-24-5	P109
Tetraethyl lead	Plumbane, tetraethyl-	78-00-2	P110
Tetraethyl pyrophosphate	Diphosphoric acid, tetraethyl ester	107-49-3	P111
Tetranitromethane	Methane, tetranitro-	509-14-8	P112
Thallium	Same	7440-28-0	
Thallium compounds, N.O.S.[1]			
Thallic oxide	Thallium oxide Tl_2O_3	1314-32-5	P113
Thallium(I) acetate	Acetic acid, thallium(1+) salt	563-68-8	U214
Thallium(I) carbonate	Carbonic acid, dithallium(1+) salt	6533-73-9	U215
Thallium(I) chloride	Thallium chloride TlCl	7791-12-0	U216
Thallium(I) nitrate	Nitric acid, thallium(1+) salt	10102-45-1	U217
Thallium selenite	Selenious acid, dithallium(1+) salt	12039-52-0	P114
Thallium(I) sulfate	Sulfuric acid, dithallium(1+) salt	7446-18-6	P115
Thioacetamide	Ethanethioamide	62-55-5	U218
Thiofanox	2-Butanone, 3,3-dimethyl-1-(methylthio)-, O-[(methylamino)carbonyl] oxime.	39196-18-4	P045
Thiomethanol	Methanethiol	74-93-1	U153
Thiophenol	Benzenethiol	108-98-5	P014
Thiosemicarbazide	Hydrazinecarbothioamide	79-19-6	P116
Thiourea	Same	62-56-6	U219
Thiram	Thioperoxydicarbonic diamide $[(H_2N)C(S)]_2S_x$, tetramethyl-.	137-26-8	U244
Toluene	Benzene, methyl-	108-88-3	U220
Toluenediamine	Benzenediamine, ar-methyl-	25376-45-8	U221
Toluene-2,4-diamine	1,3-Benzenediamine, 4-methyl-	95-80-7	

Common name	Chemical abstracts name	Chemical abstracts No.	Hazardous waste No.
Toluene-2,6-diamine	1,3-Benzenediamine, 2-methyl-	823-40-5	
Toluene-3,4-diamine	1,2-Benzenediamine, 4-methyl-	496-72-0	
Toluene diisocyanate	Benzene, 1,3-diisocyanatomethyl-	26471-62-5	U223
o-Toluidine	Benzenamine, 2-methyl-	95-53-4	U328
o-Toluidine hydrochloride	Benzenamine, 2-methyl-, hydrochloride	636-21-5	U222
p-Toluidine	Benzenamine, 4-methyl-	106-49-0	U353
Toxaphene	Same	8001-35-2	P123
1,2,4-Trichlorobenzene	Benzene, 1,2,4-trichloro-	120-82-1	
1,1,2-Trichloroethane	Ethane, 1,1,2-trichloro-	79-00-5	U227
Trichloroethylene	Ethene, trichloro-	79-01-6	U228
Trichloromethanethiol	Methanethiol, trichloro-	75-70-7	P118
Trichloromonofluoromethane	Methane, trichlorofluoro-	75-69-4	U121
2,4,5-Trichlorophenol	Phenol, 2,4,5-trichloro-	95-95-4	See F027
2,4,6-Trichlorophenol	Phenol, 2,4,6-trichloro-	88-06-2	See F027
2,4,5-T	Acetic acid, (2,4,5-trichlorophenoxy)-	93-76-5	See F027
Trichloropropane, N.O.S.[1]		25735-29-9	
1,2,3-Trichloropropane	Propane, 1,2,3-trichloro-	96-18-4	
O,O,O-Triethyl phosphorothioate	Phosphorothioic acid, O,O,O-triethyl ester	126-68-1	
1,3,5-Trinitrobenzene	Benzene, 1,3,5-trinitro-	99-35-4	U234
Tris(1-aziridinyl)phosphine sulfide	Aziridine, 1,1',1''-phosphinothioylidynetris-	52-24-4	
Tris(2,3-dibromopropyl) phosphate	1-Propanol, 2,3-dibromo-, phosphate (3:1)	126-72-7	U235
Trypan blue	2,7-Naphthalenedisulfonic acid, 3,3'-[(3,3'-dimethyl[1,1'-biphenyl]-4,4'-diyl)bis(azo)]-bis[5-amino-4-hydroxy-, tetrasodium salt.	72-57-1	U236
Uracil mustard	2,4-(1H,3H)-Pyrimidinedione, 5-[bis(2-chloroethyl)amino]-.	66-75-1	U237
Vanadium pentoxide	Vanadium oxide V_2O_5	1314-62-1	P120
Vinyl chloride	Ethene, chloro-	75-01-4	U043
Warfarin	2H-1-Benzopyran-2-one, 4-hydroxy-3-(3-oxo-1-phenylbutyl)-, when present at concentrations less than 0.3%.	81-81-2	U248
Warfarin	2H-1-Benzopyran-2-one, 4-hydroxy-3-(3-oxo-1-phenylbutyl)-, when present at concentrations greater than 0.3%.	81-81-2	P001
Warfarin salts, when present at concentrations less than 0.3%.			U248
Warfarin salts, when present at concentrations greater than 0.3%.			P001
Zinc cyanide	Zinc cyanide $Zn(CN)_2$	557-21-1	P121
Zinc phosphide	Zinc phosphide Zn_3P_2, when present at concentrations greater than 10%.	1314-84-7	P122
Zinc phosphide	Zinc phosphide Zn_3P_2, when present at concentrations of 10% or less.	1314-84-7	U249

[1] The abbreviation N.O.S. (not otherwise specified) signifies those members of the general class not specifically listed by name in this appendix.

[53 FR 13388 Apr. 22, 1988]

APPENDIX IX—WASTES EXCLUDED UNDER §§ 260.20 AND 260.22

TABLE 1—WASTES EXCLUDED FROM NON-SPECIFIC SOURCES

Facility	Address	Waste description
Arco Building Products.	Sugarcreek, Ohio.	Dewatered wastewater treatment sludge (EPA Hazardous Waste No. F019) generated from the chemical conversion coating of aluminum after August 15, 1986.
Arco Chemical Co.	Miami, FL	Dewatered wastewater treatment sludge (EPA Hazardous Waste No. F019) generated from the chemical conversion coating of aluminum after April 29, 1986.
BBC Brown Boveri, Inc.	Sanford, FL	Dewatered Wastewater treatment sludges (EPA Hazardous Waste No. F006) generated from electroplating operations after October 17, 1986.
Bommer Industries Inc..	Landrum, SC	Wastewater treatment sludges (EPA Hazardous Waste No. F006) generated from their electroplating operations and contained in evaporation ponds #1 and #2 on August 12, 1987.

TABLE 1—WASTES EXCLUDED FROM NON-SPECIFIC SOURCES—Continued

Facility	Address	Waste description
Capitol Products Corp.	Harrisburg, PA	Dewatered wastewater treatment slugdges (EPA Hazardous Waste No. F019) generated from the chemical conversion coating of aluminum after September 12, 1986.
Capitol Products Corporation.	Kentland, IN	Dewatered wastewater treatment sludges (EPA Hazardous Waste No. F019) generated from the chemical conversion coating of aluminum after November 17, 1986.
Chamberlian-Featherlite, Inc.	Hot Springs, AR.	Dewatered wastewater treatment sludges (EPA Hazardous Waste No. F019) generated from the chemical conversion coating of aluminum after July 16, 1986.
Cincinnati Metropolitan Sewer District.	Cincinnati, OH	Sluiced bottom ash (approximately 25,000 cubic yards) contained in the South Lagoon, on September 13, 1985 which contains EPA Hazardous Waste Nos. F001, F002, F003, F004, and F005.
Continental Can Co.	Olympia, WA	Dewatered wastewater treatment sludges (DPA Hazardous Waste No. F019) generated from the chemical conversion coating of aluminum after September 12, 1986.
Dover Corp., Norris Div.	Tulsa, OK	Dewatered wastewater treatment sludge (EPA Hazardous Waste No. F006) generated from their electroplating operations after April 29, 1986.
EPA's Mobile Incineration System.	Denney Farm Site; McDowell, MO.	Process wastewater, rotary kiln ash, CHEAF media, and other solids (except spent activated carbon) (EPA Hazardous Waste Nos. F020, F022, F023, F026, F027, and F028) generated during the field demonstration of EPA's Mobile Incinerator at the Denney Farm Site in McDowell, Missouri, after July 25, 1985, so long as: (1) The incinerator is functioning properly; (2) a grab sample is taken from each tank of wastewater generated and the EP leachate values do not exceed 0.03 ppm for mercury, 0.14 ppm for selenium, and 0.68 ppm for chromium; and (3) a grab sample is taken from each drum of soil or ash generated and a core sample is collected from each CHEAF roll generated and the EP leachate values of daily composites do not exceed 0.044 ppm in ash or CHEAF media for mercury or 0.22 ppm in ash or CHEAF media for selenium.
EPA's Mobile Incineration System (MIS).	McDowell, MO.	Kiln ash, cyclone ash, separator sludge, and filtered wastewater (except spent activated carbon) (EPA Hazardous Waste No. F027) generated during the treatment of cancelled pesticides containing 2,4,5-T and Silvex and related materials by the EPA's Mobile Incineration System at the Denney Farm Site in McDowell, Missouri after March 11, 1988, so long as: (1) the incinerator is monitored continuously and is in compliance with operating permit conditions. Should the incinerator fail to comply with the permit conditions relevant to the mechanical operation of the incinerator, RCB must test the residues generated during the run when the failure occurred according to the requirements of Conditions (2) through (5), regardless of whether or not the demonstration in Condition (6) has been made; (2) Four grab samples of wastewater must be composited from the volume of filtered wastewater collected after each eight hour run and, prior to disposal, the composite samples analyzed for the EP toxic metals, nickel, and cyanide. If arsenic, chromium, lead, and silver EP leachate test results exceed 0.44 ppm; barium levels exceed 8.8 ppm; cadmium and selenium levels exceed 0.09 ppm; mercury levels exceed 0.02 ppm; nickel levels exceed 4.4 ppm; or cyanide levels exceed 1.8 ppm, the wastewater must be retreated to achieve these levels or must be disposed in accordance with Subtitle C of RCRA. Analyses must be performed according to SW-846 methodologies. (3) One grab sample must be taken from each drum of kiln ash generated during each eight hour run; all grabs collected during a given eight hour run must then be composited to form one composite sample. One grab sample must be taken from each drum of cyclone ash generated during each eight hour run; all grabs collected during a given eight hour run must then be composited to form one composite sample. A composite sample of four grab samples of the separator sludge must be collected at the end of each eight hour run. Prior to the disposal of the residues from each eight hour run, an EP leachate test must be performed on these composite samples and the leachate analyzed for the EP toxic metals, nickel, and cyanide. If arsenic, chromium, lead, and silver EP leachate test results exceed 1.6 ppm; barium levels exceed 32 ppm; cadmium and selenium levels exceed 0.3 ppm; mercury levels exceed 0.07 ppm; nickel levels exceed 16 ppm; or cyanide levels exceed 6.5 ppm, the wastes must be retreated to achieve these levels or must be disposed in accordance with Subtitle C of RCRA. Analyses must be performed according to SW-846 methodologies. (4) RCB must generate, prior to disposal of residues, verification data from each eight hour run for each treatment residue (*i.e.*, kiln ash, cyclone ash, separator sludge, and filtered wastewater) to demonstrate that the maximum allowable treatment residue concentrations listed below are not exceeded. Samples must be collected as specified in conditions (2) and (3). Analyses must be performed according to SW-846 methodologies. Any residues which exceed any of the levels listed below must be retreated or must be disposed as hazardous. Solid and sludge concentrations must not exceed the following levels:

20-142 O—88——15

TABLE 1—WASTES EXCLUDED FROM NON-SPECIFIC SOURCES—Continued

Facility	Address	Waste description
		Aldrin—0.015 ppm Benzene—9.7 ppm Benzo(a)pyrene—0.43 ppm Benzo(b)fluoranthene—1.8 ppm Chlordane—0.37 ppm Chloroform—5.4 ppm Chrysene—170 ppm Dibenz(a,h)anthracene—0.083 ppm 1,2-Dichloroethane—4.1 ppm Dichloromethane—2.4 ppm 2,4-Dichlorophenol—480 ppm Dichlorvos—260 ppm Disulfaton—23 ppm Endosulfan I—310 ppm Fluorene—120 ppm Indeno(1,2,3-cd)pyrene—330 ppm Methyl parathion—210 ppm Nitrosodiphenylamine—130 ppm Phenanthrene—150 ppm Polychlorinated biphenyls—0.31 ppm Tetrachloroethylene—59 ppm 2,4,5-TP (silvex)—110 ppm 2,4,6-Trichlorophenol—3.9 ppm. And detected wastewater concentrations do not exceed the following levels: Acetone—35 ppm Aldrin—0.000018 ppm Benzene—0.044 ppm Benzo(a)pyrene—0.000027 ppm Benzo(b)fluoranthene—0.00018 ppm Biphenyl—15 ppm Bis-2-ethylhexyl phthalate—6.2 ppm Chlordane—0.00024 ppm Chlorobenzene—6.8 ppm Chloroform—0.052 ppm Chrysene—0.0018 ppm 2,4-D—3.5 ppm Dibenz(a,h)anthracene—0.0000006 ppm Dichloromethane—0.042 ppm 1,3-Dichlorobenzene—34 ppm 1,4-Dichlorobenzene—0.66 ppm 1,2-Dichlorobenzene—26 ppm 1,2-Dichloroethane—0.044 ppm 2,4-Dichlorophenol—0.88 ppm Dichlorvos—0.78 ppm Diethyl phthalate—4,400 ppm Disulfaton—0.016 ppm Endosulfan I—0.020 ppm Ethyl benzene—35 ppm Fluoranthene—1.8 ppm Fluorene—0.018 ppm Indeno(1,2,3-cd)pyrene—0.0018 ppm Isophorone—62 ppm Methyl chloride—35 ppm Methyl parathion—0.099 ppm Naphthalene—80 ppm Nitrosodiphenylamine—0.063 ppm Pentachlorophenol—8.8 ppm Phenanthrene—0.018 ppm Phenol—8.8 ppm Polychlorinated biphenyls—0.000072 ppm Pyrene—35 ppm Tetrachloroethylene—0.059 ppm 2,3,4,6-Tetrachlorophenol—8.8 ppm Toluene—88 ppm 2,4,5-TP (silvex)—0.088 ppm 1,2,4-Trichlorobenzene—6.2 ppm 2,4,6-Trichlorophenol—0.018 ppm 2,4,5-Trichlorophenol—35 ppm 2,4,5-Trichlorophenoxyacetic acid—0.88 ppm Xylene—619 ppm;

TABLE 1—WASTES EXCLUDED FROM NON-SPECIFIC SOURCES—Continued

Facility	Address	Waste description
		(5) RCB must generate, prior to disposal of residues, verification data from each eight hour run for each treatment residue (*i.e.*, kiln ash, cyclone ash, separator sludge, and filtered wastewater) to demonstrate that the residues do not contain tetra-, penta-, or hexachlorodibenzo-p-dioxins or furans at levels of regulatory concern. Samples must be collected as specified in conditions (2) and (3). The TCDD equivalent levels for solids must be less than 5 ppt and for wastewater the levels must be below 0.002 ppt. Any residues with detected dioxins or furans in excess of these levels must be retreated or must be disposed as acutely hazardous. Method 8290, a high resolution gas chromatography and high resolution mass spectroscopy (HRGC/HRMS) analytical method, must be used. For tetra- and penta-chlorinated dioxin and furan homologs, the maximum practical quantitation limit must not exceed 15 ppt for solids and 120 ppq for wastewaters. For hexachlorinated dioxin and furan homologs, the maximum practical quantitation limit must not exceed 37 ppt for solids and 0.3 ppt for wastewaters; (6) The test data from conditions (1), (2), (3), (4) and (5) must be kept on file by RCB for inspection purposes and must be compiled, summarized, and submitted to the Assistant Administrator for Solid Waste and Emergency Response by certified mail on a monthly basis and when the treatment of the cancelled pesticides and related materials is concluded. The testing requirements for conditions (2), (3), (4), and (5) will continue until RCB provides the Assistant Administrator with the results of four consecutive batch analyses for the petitioned wastes, none of which exceed the maximum allowable treatment residue concentrations listed in these conditions and the Assistant Administrator notifies RCB that the conditions have been lifted. All data submitted will be placed in the RCRA docket. (7) RCB must provide a signed copy of the following certification statement when submitting data in response to the conditions listed above: "Under civil and criminal penalty of law for the making or submission of false or fraudulent statements or representations, I certify that the information contained in or accompanying this document is true, accurate, and complete. As to the (those) identified section(s) of this document for which I cannot personally verify its (their) accuracy, I certify as the Agency official having supervisory responsibility for the persons who, acting under my direct instructions, made the verification that this information is true, accurate and complete."
Envirite Corporation.	Canton, Ohio; Harvey, Illinois; Thomaston, Connecticut; and York, PA.	Dewatered wastewater sludges (EPA Hazardous Waste No. F006) generated from electroplating operations; spent cyanide plating solutions (EPA Hazardous Waste No. F007) generated from electroplating operations; plating bath residues from the bottom of plating baths (EPA Hazardous Waste No. F006) generated from electroplating operations where cyanides are used in the process; spent stripping and cleaning bath solutions (EPA Hazardous Waste No. F009) generated from electro-plating operations where cyanides are used in the process; spent cyanide solutions from salt bath pot cleaning (EPA Hazardous Waste No. F011) generated from Metal heat treating operations; quenching wastewater treatment sludges (EPA Hazardous Waste No. F012) generated from metal heat treating where cyanides are used in the process; wastewater treatment sludges (EPA Hazardous Waste No. F019) generated from the chemical conversion coating of aluminum after November 14, 1986. To ensure that hazardous constituents are not present in the waste at levels of regulatory concern, the facility must implement a contingency testing program for the petitioned wastes. This testing program must meet the following conditions for the exclusions to be valid: (1) Each batch of treatment residue must be representatively sampled and tested using the EP Toxicity test for arsenic, barium, cadmium, chromium, lead, selenium, silver, mercury, and nickel. If the extract concentrations for chromium, lead, arsenic, and silver exceed 0.315 ppm; barium levels exceed 6.3 ppm; cadmium and selenium exceed 0.063 ppm; mercury exceeds 0.0126 ppm; or nickel levels exceed 2.205 ppm, the waste must be re-treated or managed and disposed as a hazardous waste under 40 CFR Parts 262 to 265 and the permitting standards of 40 CFR Part 270. (2) Each batch of treatment residue must be tested for reactive and leachable cyanide. If the reactive cyanide levels exceed 250 ppm or leachable cyanide levels (using the EP Toxicity test without acetic acid adjustment) exceed 1.26 ppm, the waste must be re-treated or managed and disposed as a hazardous waste under 40 CFR Parts 262 to 265 and the permitting standards of 40 CFR Part 270. (3) Each batch of waste must be tested for the total content of specific organic toxicants. If the total content of anthracene exceeds 76.8 ppm, 1,2-diphenyl hydrazine exceeds 0.001 ppm, methylene chloride exceeds 8.18 ppm, methyl ethyl ketone exceeds 326 ppm, n-nitrosodiphenylamine exceeds 11.9 ppm, phenol exceeds 1,566 ppm, tetrachloroethylene exceeds 0.188 ppm, or trichloroethylene exceeds 0.592 ppm, the waste must be managed and disposed as a hazardous waste under 40 CFR Parts 262 and 265 and the permitting standards of 40 CFR Part 270.

TABLE 1—WASTES EXCLUDED FROM NON-SPECIFIC SOURCES—Continued

Facility	Address	Waste description
		(4) A grab sample must be collected from each batch to form one monthly composite sample which must be tested using GC/MS analysis for the compounds listed in #3 above as well as the remaining organics on the priority pollutant list. (See 47 FR 52309 November 19, 1982, for a list of the priority pollutants.) (5) The data from conditions 1-4 must be kept on file at the facility for inspection purposes and must be compiled, summarized, and submitted to the Administrator by certified mail semi-annually. The Agency will review this information and if needed will propose to modify or withdraw the exclusion. The organics testing described in conditions 3 and 4 above are not required until six months from the date of promulgation. The Agency's decision to conditionally exclude the treatment residue generated from the wastewater treatment systems at these facilities applies only to the wastewater and solids treatment systems as they presently exist as described in the delisting petition. The exclusion does not apply to the proposed process additions described in the petition as recovery including crystalization, electrolytic metals recovery, evaporative recovery, and ion exchange.
Falconer Glass Indust., Inc.	Falconer, NY	Wastewater treatment sludges from the filter press and magnetic drum separator (EPA Hazardous Waste No. F006) generated from electroplating operations after July 16, 1986.
Florida Production Engineering Company.	Daytona Beach, Florida.	This is a one-time exclusion. Wastewater treatment sludges (EPA Hazardous Waste No. F006) generated from electroplating operations and contained in four on-site trenches on January 23, 1987.
General Cable Co.	Muncie, IN	Dewatered wastewater treatment sludges (EPA Hazardous Waste Nos. F006 and K062) generated from electroplating operations and steel finishing operations after October 24, 1986. This exclusion does not apply to sludges in any on-site impoundments as of this date.
General Electric Company.	Shreveport Louisiana.	Wastewater treatment sludges (EPA Hazardous Waste No. F006) generated from electroplating operations and contained in four on-site treatment ponds on August 12, 1987.
General Motors Corp., Fisher Body Division.	Elyria, OH	The residue generated from the use of the Chemfix® treatment process on sludge (EPA Hazardous Waste No. F006) generated from electroplating operations and contained in three on-site surface impoundments on November 14, 1986. To assure that stabilization occurs, the following conditions apply to this exclusion: (1) Mixing ratios shall be monitored continuously to assure consistent treatment. (2) One grab sample of the treated waste shall be taken each hour as it is pumped to the holding area (cell) from each trailer unit. At the end of each production day, the grab samples from the individual trailer units will be composited and the EP toxicity test will be run on each composite sample. If lead or total chromium concentrations exceed 0.315 ppm or if nickel exceeds 2.17 ppm, in the EP extract, the waste will be removed and retreated or disposed of as a hazardous waste. (3) The treated waste shall be pumped into bermed cells which are constructed to assure that the treated waste is identifiable and retrievable (*i.e.*, the material can be removed and either disposed of as a hazardous waste or retreated if conditions 1 or 2 are not met). Failure to satisfy any of these conditions would render the exclusion void. This is a one-time exclusion, applicable only to the residue generated from the use of the Chemfix® treatment process on the sludge currently contained in the three on-site surface impoundments.
Gould, Inc	McConnelsville, OH.	Wastewater treatment sludge (EPA Hazardous Waste No. F006) generated from electroplating operations after November 27, 1985.
Hanover Wire Cloth Division.	Hanover, Pennsylvania.	Dewatered filter cake (EPA Hazardous Waste No. F006) generated from electroplating operations after August 15, 1986.
Holston Army Ammunition Plant.	Kingsport, Tennessee.	Dewatered wastewater treatment sludges (EPA Hazardous Waste Nos. F003, F005, and K044) generated from the manufacturing and processing of explosives and containing spent non-halogenated solvents after November 14, 1986.
Imperial Clevite.	Salem, IN	Solid resin cakes containing EPA Hazardous Waste No. F002 generated after August 27, 1985, from solvent recovery operations.
International Minerals and Chemical Corporation.	Terre Haute, Indiana.	Spent non-halogenated solvents and still bottoms (EPA Hazardous Waste No. F003) generated from the recovery of n-butyl alchohol after August 15, 1986.
Kay-Fries, Inc	Stoney Point, NY.	Biological aeration lagoon sludge and filter press sludge generated after September 21, 1984, which contain EPA Hazardous Waste Nos. F003 and F005 as well as that disposed of in a holding lagoon as of September 21, 1984.
Keymark Corp	Fonda, NY	Wastewater treatment sludge (EPA Hazardous Waste No. F019) generated from chemical conversion coating of aluminum after November 27, 1985.
Keymark Corp	Fonda, New York	Wastewater treatment sludges (EPA Hazardous Waste No. F019) generated from the chemical conversion coating of aluminum and contained in an on-site impoundment on August 12, 1987. This is a one-time exclusion.

TABLE 1—WASTES EXCLUDED FROM NON-SPECIFIC SOURCES—Continued

Facility	Address	Waste description
Lincoln Plating Company.	Lincoln, NE	Wastewater treatment sludges (EPA Hazardous Waste No. F006) generated from electroplating operations after November 17, 1986.
Loxcreen Company, Inc.	Hayti, MO	Dewatered wastewater treatment sludges (EPA Hazardous Waste No. F019) generated from the chemical conversion coating of aluminum after July 16, 1986.
Martin Marietta Aerospace.	Ocala, Florida	Dewatered wastewater treatment sludges (EPA Hazardous Waste No. F006) generated from electroplating operations after January 23, 1987.
Maytag Company.	Newton, IA	Wastewater treatment sludges (EPA Hazardous Waste No. F006) generated from electroplating operations and wastewater treatment sludges (EPA Hazardous Waste No. F019) generated from the chemical conversion coating of aluminum November 17, 1986.
Metropolitan Sewer District of Greater Cincinnati.	Cincinnati, OH	Sluiced bottom ash sludge (approximately 25,000 cubic yards), contained in the North Lagoon, on September 21, 1984, which contains EPA Hazardous Wastes Nos. F001, F002, F003, F004, and F005.
Michelin Tire Corp.	Sandy Springs, South Carolina.	Dewatered wastewater treatment sludge (EPA Hazardous Wastes No. F006) generated from electroplating operations after November 14, 1986.
Monroe Auto Equipment.	Paragould, AR	Wastewater treatment sludge (EPA Hazardous Waste No. F006) generated from electroplating operations after vacuum filtration after November 27, 1985. This exclusion does not apply to the sludge contained in the on-site impoundment.
Pamcor C, Inc	Las Piedras, PR.	Dewatered Wastewater treatment sludges (EPA Hazardous Waste No. F006) generated from electroplating operations after October 17, 1986.
Plastene Supply Company.	Portageville, Missouri.	Dewatered wastewater treatment sludges (EPA Hazardous Waste No. F006) generated from electroplating operations after August 15, 1986.
Reynolds Metals Company.	Sheffield, AL	Dewatered wastewater treatment sludges (EPA Hazardous Waste No. F019) generated from the chemical conversion coating of aluminum after August 15, 1986.
Siegel-Robert, Inc.	St. Louis, MO	Wastewater treatment sludge (EPA Hazardous Waste No. F006) generated from electroplating operations after November 27, 1985.
Square D Company.	Oxford, Ohio	Dewatered filter press sludge (EPA Hazardous Waste No. F006) generated from electroplating operations after August 15, 1986.
Syntex Agribusiness.	Springfield, MO.	Kiln ash, cyclone ash, separator sludge, and filtered wastewater (except spent activiated carbon) (EPA Hazardous Waste No. F020 generated during the treatment of wastewater treatment sludge by the EPA's Mobile Incineration System at the Denney Farm Site in McDowell, Missouri after June 2, 1988, so long as: (1) The incinerator is monitored continuously and is in compliance with operating permit conditions. Should the incinerator fail to comply with the permit conditions relevant to the mechanical operation of the incinerator, Syntex must test the residues generated during the run when the failure occurred according to the requirements of Conditions (2) through (6), regardless of whether or not the demonstration in Condition (7) has been made. (2) Four grab samples of wastewater must be composited from the volume of filtered wastewater collected after each eight hour run and, prior to disposal the composite samples must be analyzed for the EP toxic metals, nickel, and cyanide. If arsenic, chromium, lead, and silver EP leachate test results exceed 0.61 ppm; barium levels exceed 12 ppm; cadmium and selenium levels exceed 0.12 ppm; mercury levels exceed 0.02 ppm; nickel levels exceed 6.1 ppm; or cyanide levels exceed 2.4 ppm, the wastewater must be retreated to achieve these levels or must be disposed in accordance with all applicable hazardous waste regulations. Analyses must be performed according to SW-846 methodologies. (3) One grab sample must be taken from each drum of kiln and cyclone ash generated during each eight hour run; all grabs collected during a given eight hour run must then be composited to form one composite sample. A composite sample of four grab samples of the separator sludge must be collected at the end of each eight hour run. Prior to the disposal of the residues from each eight hour run, an EP leachate test must be performed on these composite samples and the leachate analyzed for the EP toxic metals, nickel, and cyanide (using a distilled water extraction for the cyanide extraction) to demonstrate that the following maximum allowable treatment residue concentrations listed below are not exceeded. Analyses must be performed according to SW-846 methodologies. Any residues which exceed any of the levels listed below must be retreated to achieve these levels or must be disposed in accordance with all applicable hazardous waste regulations. Maximum Allowable Solids Treatment Residue EP Leachate Concentrations (mg/L) Arsenic—1.6 Barium—32 Cadmium—0.32 Chromium—1.6 Lead—1.6

TABLE 1—WASTES EXCLUDED FROM NON-SPECIFIC SOURCES—Continued

Facility	Address	Waste description
		Mercury—0.065 Nickel—16 Selenium—0.32 Silver—1.6 Cyanide—6.5 (4)—If Syntex stabilizes any of the kiln and cyclone ash or separator sludge, a Portland cement-type stabilization process must be used and Syntex must collect a composite sample of four grab samples from each batch of stabilized waste. An MEP leachate test must be performed on these composite samples and the leachate analyzed for the EP toxic metals, nickel, and cyanide (using a distilled water extraction for the cyanide leachate analysis) to demonstrate that the maximum allowable treatment residue concentrations listed in Condition (3) are not exceeded during any run of the MEP extraction. Analyses must be performed according to SW-846 methodologies. Any residues which exceed any of the levels listed in Condition (3) must be retreated to achieve these levels or must be disposed in accordance with all applicable hazardous waste regulations. (If the residues are stabilized, the analyses required in this condition supercede the analyses required in Condition (3).) (5) Syntex must generate, prior to disposal of residues, verification data from each eight hour run from each treatment residue (*i.e.*, kiln and cyclone ash, separator sludge, and filtered wastewater) to demonstrate that the maximum allowable treatment residue concentrations listed below are not exceeded. Samples must be collected as specified in Conditions (2) and (3). Analyses must be performed according to SW-846 methodologies. Any solid or liquid residues which exceed any of the levels listed below must be retreated to achieve these levels or must be disposed in accordance with Subtitle C of RCRA. Maximum Allowable Wastewater Concentrations (ppm): Benz(a)anthracene—1×10^{-4} Benzo(a)pyrene—4×10^{-5} Benzo(b)fluoranthene—2×10^{-4} Chloroform—0.07 Chrysene—0.002 Dibenz(a,h)anthracene—9×10^{-6} 1,2-Dichloroethane—0.06 Dichloromethane—0.06 Indeno(1,2,3-cd)pyrene—0.002 Polychlorinated biphenyls—1×10^{-4} 1,2,4,5-Tetrachlorobenzene—0.13 2,3,4,6-Tetrachlorophenol—12 Toluene—120 Trichloroethylene—0.04 2,4,5-Trichlorophenol—49 2,4,6-Trichlorophenol—0.02 Maximum Allowable Solid Treatment Residue Concentrations (ppm): Benz(a)anthracene—1.1 Benzo(a)pyrene—0.43 Benzo(b)fluoranthene—1.8 Chloroform—5.4 Chrysene—170 Dibenz(a,h)anthracene—0.083 Dichloromethane—2.4 1,2-Dichloroethane—4.1 Indeno(1,2,3-cd)pyrene—330 Polychlorinated biphenyls—0.31 1,2,4,5-Tetrachlorobenzene—720 Trichloroethylene—6.6 2,4,6-Trichlorophenol—3.9 (6) Syntex must generate, prior to disposal of residues, verification data from each eight hour run for each treatment residue (*i.e.*, kiln and cyclone ash, separator sludge, and filtered wastewater) to demonstrate that the residues do not contain tetra-, penta-, or hexachlorodibenzo-p-dioxins or furans at levels of regulatory concern. Samples must be collected as specified in Conditions (2) and (3). The TCDD equivalent levels for wastewaters must be less than 2 ppq and less than 5 ppt for the solid treatment residues. Any residues with detected dioxins or furans in excess of these levels must be retreated or must be disposed as acutely hazardous. Method 8290, a high resolution gas chromatography and high resolution mass spectroscopy (HRGC/HRMS) analytical method, must be used. For tetra- and pentachloronated dioxin and furan homologs, the maximum practical quantitation limit must not exceed 15 ppt for solids and 120 ppq for wastewaters. For hexachlorinated homologs, the maximum practical quantitation limit must not exceed 37 ppt for solids and 300 ppq for wastewaters.

TABLE 1—WASTES EXCLUDED FROM NON-SPECIFIC SOURCES—Continued

Facility	Address	Waste description
		(7)(A) The test data from Conditions (1), (2), (3), (4), (5) and (6) must be kept on file by Syntex for inspection purposes and must be compiled, summarized, and submitted to the Section Chief, Variances Section, PSPD/OSW (WH-563), US EPA, 401 M Street, S.W., Washington, D.C. 20460 by certified mail on a monthly basis and when the treatment of the lagoon sludge is concluded. All data submitted will be placed in the RCRA docket. (B) The testing requirements for Conditions (2), (3), (4), (5), and (6) will continue until Syntex provides the Section Chief, Variances Section, with the results of four consecutive batch analyses for the petitioned wastes, none of which exceed the maximum allowable treatment residue concentrations listed in these conditions and the Section Chief, Variances Section, notifies Syntex that the conditions have been lifted. (8) Syntex must provide a signed copy of the following certification statement when submitting data in response to the conditions listed above: "Under civil and criminal penalty of law for the making or submission of false or fraudulent statements or representations, I certify that the information contained in or accompanying this document is true, accurate, and complete. As to the (those) identified section(s) of this document for which I cannot personally verify its (their) accuracy, I certify as the company official having supervisory responsibility for the persons who, acting under my direct instructions, made the verification that this information is true, accurate and complete."
SR of Tennessee.	Ripley, TN.....	Dewatered wastewater treatment sludges (EPA Hazardous Waste No. F006) generated from the copper, nickel, and chromium electroplating of plastic parts after November 17, 1986.
Tennessee Electroplating.	Ripley, Tennessee.	Dewatered wastewater treatment sludges (EPA Hazardous Waste Nos. F006) generated from electroplating operations after November 17, 1986. To ensure chromium levels do not exceed the regulatory standards there must be continuous batch testing of the filter press sludge for chromium for 45 days after the exclusion is granted. Each batch of treatment residue must be representatively sampled and tested using the EP toxicity test for chromium. This data must be kept on file at the facility for inspection purposes. If the extract levels exceed 0.922 ppm of chromium the waste must be managed and disposed of as hazardous. If these conditions are not met, the exclusion does not apply. This exclusion does not apply to sludges in any on-site impoundments as of this date.
Texas Instruments, Inc.	Dallas, TX.....	Wastewater treatment sludges (EPA Hazardous Waste Nos. F006 and F019) generated after August 27, 1985, from their electroplating operations that have been batch tested for cadmium using the EP toxicity procedure and have been found to contain less than 0.30 ppm cadmium in the EP extract. Wastewater treatment sludges that exceed this level will be considered a hazardous waste.
Tricil Environmental Systems, Inc.	Hilliard, Ohio.....	Dewatered wastewater treatment sludges (EPA Hazardous Waste No. F006) generated from electroplating operations after November 17, 1986. To ensure that hazardous constituents are not present in the waste at levels of regulatory concern, the facility must implement a contingency testing program for the petitioned wastes. This testing program must meet the following conditions for the exclusion to be valid: (1) Each batch of treatment residue must be representatively sampled and tested using the total oil and grease test and the EP Toxicity test (or the Oily Waste EP test, if the oil and grease content of the waste exceeds one percent) for arsenic, barium, cadmium, chromium, lead, selenium, silver, mercury, and nickel. If the extract concentrations for chromium, lead, arsenic, and silver exceed 0.315 ppm; barium levels exceed 6.3 ppm; cadmium and selenium levels exceed 0.063 ppm; mercury levels exceed 0.013 ppm; or nickel levels exceed 2.2 ppm, the waste will be re-treated or managed and disposed as a hazardous waste under 40 CFR Parts 262 to 265 and the permitting standards of 40 CFR Part 270. (2) Each batch of treatment residue must be tested for reactive and leachable cyanide. If the reactive cyanide levels exceed 250 ppm or leachable cyanide levels (using the EP Toxicity test without acetic acid adjustment) exceed 1.26 ppm, the waste must be re-treated or managed and disposed as a hazardous waste under 40 CFR Parts 262 to 265 and the permitting standards of 40 CFR Part 270. (3) Each batch of the waste must be tested for the total content of the following organic toxicants. If the total content of any of the constituents exceeds the maximum levels shown, the waste must be managed and disposed as a hazardous waste under 40 CFR Parts 262 to 265 and the permitting standards of 40 CFR Part 270 Compound and Maximum Acceptable Levels (ppm) Acrolein, 56.8 Anthracene, 76.8 Benzene, 0.106 p-Chloro-m-cresol, 133 1,1-Dichloroethane, 0.01 Fluorene, 10.4 Methylene chloride, 8.2 Methyl ethyl ketone, 326 n-Nitrosodiphenylamine, 11.9 Phenanthrene, 14 Tetrachloroethylene, 0.188 Trichloroethylene, 0.59

TABLE 1—WASTES EXCLUDED FROM NON-SPECIFIC SOURCES—Continued

Facility	Address	Waste description
		Chloroform, 0.013 1,2-Dichloroethane, 0.0083 1,2-trans-Dichloroethylene, 231 2,4-Dimethylphenol, 12.5 Vinyl chloride, 0.18 (4) A grab sample must be collected from each batch to form one monthly composite sample, which must be tested using GC/MS analysis for the compounds shown above as well as the remaining organics on the priority pollutant list. (See 47 FR 52309, November 19, 1982, for a list of the priority pollutants.) (5) The test data from conditions 1-4 must be kept on file at the facility for inspection purposes and must be compiled, summarized, and submitted to the Administrator by certified mail on a semiannual basis. The Agency will review this information and if needed, will propose to modify or withdraw the exclusion. The organics testing described in conditions 3 and 4 above is not required until May 18, 1987. The Agency's decision to conditionally exclude the treatment residue generated from the wastewater treatment system at this facility applies only to the wastewater treatment residue as described in this petition.
Tricil Environmental Systems, Inc.	Nashville, Tennessee	Dewatered wastewater treatment sludges (EPA Hazardous Waste No. F019) generated from chemical conversion coating of aluminum after November 17, 1986. To ensure that hazardous constituents are not present in the waste at levels of regulatory concern, the facility must implement a contingency testing program for the petitioned wastes. This testing program must meet the following conditions for the exclusion to be valid: (1) Each batch of treatment residue must be representatively sampled and tested using the total oil and grease test and the EP Toxicity test (or the Oily Waste EP test, if the oil and grease content of the waste exceeds one percent) for arsenic, barium, cadmium, chromium, lead, selenium, silver, mercury, and nickel. If the extract concentrations for chromium, lead, arsenic, and silver exceed 1.1 ppm; barium levels exceed 22.2 ppm; cadmium and selenium levels exceed 0.22 ppm; mercury levels exceed 0.044 ppm; or nickel levels exceed 7.8 ppm, the waste will be re-treated or managed and disposed as a hazardous waste under 40 CFR Parts 262 to 265 and the permitting standards of 40 CFR Part 270. (2) Each batch of treatment residue must be tested for reactive and leachable cyanide. If the reactive cyanide levels exceed 250 ppm or leachable cyanide levels (using the EP Toxicity test without acetic acid adjustment) exceed 4.4 ppm, the waste must be re-treated or managed and disposed as a hazardous waste under 40 CFR Parts 262 to 265 and the permitting standards of 40 CFR Part 270. (3) Each batch of the waste must be tested for the total content of the following organic toxicants. If the total content of any of the constituents exceeds the maximum levels shown, the waste must be managed and disposed as a hazardous waste under 40 CFR Parts 262 to 265 and the permitting standards of 40 CFR Part 270. Compound and Maximum Acceptable Levels (ppm) Acrolein, 38.1 Anthracene, 4.82 Benzene, 0.68 p-Chloro-m-cresol, 848 1,1-Dichloroethane, 0.068 Fluorene, 66.7 Methylene chloride, 52.4 n-Nitrosodiphenylamine, 76.1 Phenanthrene, 89 Tetrachloroethylene, 1.2 Trichloroethylene, 3.78 Chloroform, 0.081 1,2-Dichloroethane, 0.053 2,4-Dimethylphenol, 79.7 Vinyl chloride, 1.16 1,2-Diphenyl hydrazine, 0.005 (4) A grab sample must be collected from each batch to form one monthly composite sample, which must be tested using GC/MS analysis for the compounds shown above as well as the remaining organics on the priority pollutant list. (See 47 FR 52309, November 19, 1982, for a list of the priority pollutants.) (5) The test data from conditions 1-4 must be kept on file at the facility for inspection purposes and must be compiled, summarized, and submitted to the Administrator by certified mail on a semiannual basis. The Agency will review this information and if needed, will propose to modify or withdraw the exclusion. The organics testing described in conditions 3 and 4 above is not required until May 18, 1987. The Agency's decision to conditionally exclude the treatment residue generated from the wastewater treatment system at this facility applies only to the wastewater treatment residue as described in this petition.

TABLE 1—WASTES EXCLUDED FROM NON-SPECIFIC SOURCES—Continued

Facility	Address	Waste description
Tricil Environmental Systems, Inc.	Muskegon, Michigan.	Dewatered wastewater treatment sludges (EPA Hazardous Waste No. F006) generated from electroplating operations after November 17, 1986. To ensure that hazardous constituents are not present in the waste at levels of regulatory concern, the facility must implement a contingency testing program for the petitioned wastes. This testing program must meet the following conditions for the exclusion to be valid: (1) Each batch of treatment residue must be representatively sampled and tested using the total oil and grease test and the EP Toxicity test (or the Oily Waste EP test, if the oil and grease content of the waste exceeds one percent) for arsenic, barium, cadmium, chromium, lead, selenium, silver, mercury, and nickel. If the extract concentrations for chromium, lead, arsenic, and silver exceed 0.315 ppm; barium levels exceed 6.3 ppm; cadmium and selenium levels exceed 0.063 ppm; mercury levels exceed 0.013 ppm; or nickel levels exceed 2.2 ppm, the waste will be re-treated or managed and disposed as a hazardous waste under 40 CFR Parts 262 to 265 and the permitting standards of 40 CFR Part 270. (2) Each batch of treatment residue must be tested for reactive and leachable cyanide. If the reactive cyanide levels exceed 250 ppm or leachable cyanide levels (using the EP Toxicity test without acetic acid adjustment) exceed 1.26 ppm, the waste must be re-treated or managed and disposed as a hazardous waste under 40 CFR Parts 262 to 265 and the permitting standards of 40 CFR Part 270. (3) Each batch of the waste must be tested for the total content of the following organic toxicants. If the total content of any of the constituents exceeds the maximum levels shown, the waste must be managed and disposed as a hazardous waste under 40 CFR Parts 262 to 265 and the permitting standards of 40 CFR Part 270. Compound and Maximum Acceptable Levels (ppm) Acrolein, 56.8 Anthracene, 76.8 Benzene, 0.106 p-Chloro-m-cresol, 133 1,1-Dichloroethane, 0.01 Fluorene, 10.4 Methylene chloride, 8.2 Methyl ethyl ketone, 326 n-Nitrosodiphenylamine, 11.9 Phenanthrene, 14 Tetrachloroethylene, 0.188 Trichloroethylene, 0.59 Chloroform, 0.013 1,2-Dichloroethane, 0.0083 1,2-trans-Dichloroethylene, 231 2,4-Dimethylphenol, 12.5 Vinyl chloride, 0.18 (4) A grab sample must be collected from each batch to form one monthly composite sample, which must be tested using GC/MS analysis for the compounds shown above as well as the remaining organics on the priority pollutant list. (See 47 FR 52309, November 19, 1982, for a list of the priority pollutants.) (5) The test data from conditions 1-4 must be kept on file at the facility for inspection purposes and must be compiled, summarized, and submitted to the Administrator by certified mail on a semiannual basis. The Agency will review this information and if needed, will propose to modify or withdraw the exclusion. The organics testing described in conditions 3 and 4 above is not required until May 18, 1987. The Agency's decision to conditionally exclude the treatment residue generated from the wastewater treatment system at this facility applies only to the wastewater treatment residue as described in this petition.
United Technologies Automotive, Inc.	Jeffersonville, IN.	Dewatered wastewater treatment sludge (EPA Hazardous Waste No. F019) generated from the chemical conversion of aluminum after April 29, 1986.
Universal Oil Products.	Decatur, Alabama.	Wastewater treatment sludges (EPA Hazardous Waste No. F006) generated from electroplating operations and contained in two on-site lagoons on August 15, 1986. This is a one-time exclusion.
Vermont American, Corp.	Newark, OH.....	Wastewater treatment sludge (EPA Hazardous Waste No. F006) generated from electroplating operations after November 27, 1985.
Waterloo Industries.	Pocahontas, AR.	Wastewater treatment sludges (EPA Hazardous Waste No. F006) generated from electroplating operations after dewatering and held on-site on July 17, 1986 and any such sludge generated (after dewatering) after July 17, 1986.
Watervliet Arsenal.	Watervliet, NY..	Wastewater treatment sludges (EPA Hazardous Waste No F006) generated from electroplating operations after January 10, 1986.

TABLE 1—WASTES EXCLUDED FROM NON-SPECIFIC SOURCES—Continued

Facility	Address	Waste description
William L. Bonnell Co.	Carthage, TN	Dewatered Wastewater treatment sludges (Vacuum filter sludge) (EPA Hazardous Waste No. F019) currently generated from the chemical conversion coating of aluminum after October 17, 1986. This exclusion does not apply to sludges in the on-site surface impoundments.
William L. Bonnell Co.	Newnan, Georgia.	Dewatered wastewater treatment sludges (EPA Hazardous Waste No. F019) generated from the chemical conversion coating of aluminum after November 14, 1986. This exclusion does not include sludges contained in Bonnell's on-site surface impoundments.
Windsor Plastics, Inc.	Evansville, IN	Spent non-halogenated solvents and still bottoms (EPA Hazardous Waste No. F003) generated from the recovery of acetone after November 17, 1986.

TABLE 2—WASTES EXCLUDED FROM SPECIFIC SOURCES

Facility	Address	Waste description
American Cyanamid.	Hannibal, Missouri.	Wastewater and sludge (EPA Hazardous Waste No. K038) generated from the washing and stripping of phorate production and contained in on-site lagoons on May 8, 1987, and such wastewater and sludge generated after May 8, 1987.
Amoco Oil Co.	Wood River, IL.	150 million gallons of DAF from petroleum refining contained in in four surge ponds after treatment with the Chemfix® stabilization process. This waste contains EPA Hazardous Waste No. K048. This exclusion applies to the 150 million gallons of waste after chemical stabilization as long as the mixing ratios of the reagent with the waste are monitored continuously and do not vary outside of the limits presented in the demonstration samples; one grab sample is taken each hour from each treatment unit, composited, and EP toxicity tests performed on each sample. If the levels of lead or total chromium exceed 0.5 ppm in the EP extract, then the waste that was processed during the compositing period is considered hazardous; the treatment residue shall be pumped into bermed cells to ensure that the waste is identifiable in the event that removal is necessary.
Envirite Corporation.	Canton, Ohio; Harvey, Illinois; Thomaston, Connecticut; and York PA.	Spent pickle liquor (EPA Hazardous Waste No. K062) generated from steel finishing operations of facilities within the iron and steel industry (SIC Codes 331 and 332); wastewater treatment sludge (EPA Hazardous Waste No. K002) generated from the production of chrome yellow and orange pigments; wastewater treatment sludge (EPA Hazardous Waste No. K003) generated from the production of molybdate orange pigments; wastewater treatment sludge (EPA Hazardous Waste No. K004) generated from the production of zinc yellow pigments; wastewater treatment sludge (EPA Hazardous Waste No. K005) generated from the production of chrome green pigments; wastewater treatment sludge (EPA Hazardous Waste No. K006) generated from the production of chrome oxide green pigments (anhydrous and hydrated); wastewater treatment sludge (EPA Hazardous Waste No. K007) generated from the production of iron blue pigments; oven residues (EPA Hazardous Waste No. K008) generated from the production of chrome oxide green pigments after November 14, 1986. To ensure that hazardous constituents are not present in the waste at levels of regulatory concern, the facility must implement a contingency testing program for the petitioned wastes. This testing program must meet the following conditions for the exclusions to be valid: (1) Each batch of treatment residue must be representatively sampled and tested using the EP Toxicity test for arsenic, barium, cadmium, chromium, lead, selenium, silver, mercury, and nickel. If the extract concentrations for chromium, lead, arsenic, and silver exceed 0.315 ppm; barium levels exceed 6.3 ppm; cadmium and selenium exceed 0.063 ppm; mercury exceeds 0.0126 ppm; or nickel levels exceed 2.205 ppm, the waste must be retreated or managed and disposed as a hazardous waste under 40 CFR Parts 262 to 265 and the permitting standards of 40 CFR Part 270. (2) Each batch of treatment residue must be tested for reactive and leachable cyanide. If the reactive cyanide levels exceed 250 ppm; or leachable cyanide levels (using the EP Toxicity test without acetic acid adjustment) exceed 1.26 ppm, the waste must be retreated or managed and disposed as hazardous waste under 40 CFR Parts 262 to 265 and the permitting standards of 40 CFR 270. (3) Each batch of waste must be tested for the total content of specific organic toxicants. If the total content of anthracene exceeds 76.8 ppm, 1,2-diphenyl hydrazine exceeds 0.001 ppm, methylene chloride exceeds 8.18 ppm, methyl ethyl ketone exceeds 326 ppm, n-nitrosodiphenylamine exceeds 11.9 ppm, phenol exceeds 1,566 ppm, tetrachloroethylene exceeds 0.188 ppm, or trichloroethylene exceeds 0.592 ppm, the waste must be managed and disposed as a hazardous waste under 40 CFR Parts 262 to 265 and the permitting standards of 40 CFR Part 270. (4) A grab sample must be collected from each batch to form one monthly composite sample which must be tested using GC/MS analysis for the compounds listed in #3 above as well as the remaining organics on the priority pollutan list. (See 47 FR 52309, November 19, 1982, for a list of the priority pollutants.)

TABLE 2—WASTES EXCLUDED FROM SPECIFIC SOURCES—Continued

Facility	Address	Waste description
		(5) The data from conditions 1-4 must be kept on file at the facility for inspection purposes and must be compiled, summarized, and submitted to the Administrator by certified mail semi-annually. The Agency will review this information and if needed will propose to modify or withdraw the exclusion. The organics testing described in conditions 3 and 4 above is not required until six months from the date of promulgation. The Agency's decision to conditionally exclude the treatment residue generated from the wastewater treatment systems at these facilities applies only to the wastewater and solids treatment systems as they presently exist as described in the delisting petition. The exclusion does not apply to the proposed process additions described in the petition as recovery, including crystalization, electrolytic metals recovery, evaporative recovery, and ion exchange.
LCP Chemical	Orrington, ME	Brine purification muds and wastewater treatment sludges generated after August 27, 1985 from their chlor-alkali manufacturing operations (EPA Hazardous Waste Nos. K071 and K106) that have been batch tested for mercury using the EP toxicity procedures and have been found to contain less than 0.05 ppm mercury in the EP extract. Brine purification muds and wastewater treatment sludges that exceed this level will be considered a hazardous waste.
Mearl Corp.	Peekskill, NY	Wastewater treatment sludge (EPA Hazardous Waste Nos. K006 and K007) generated from the production of chrome oxide green and iron blue pigments after November 27, 1985.
Monsanto Industrial Chemicals Company.	Sauget, Illinois	Brine purification muds (EPA Hazardous Waste No. K071) generated from the mercury cell process in chlorine production, where separately prepurified brine is not used after August 15, 1986.
Stauffer Chemical Co.	Axis, AL	Brine purification muds generated from their chlor-alkali manufacturing operatings (EPA Hazardous Waste No. K071) and disposed of in brine mud pond HWTF: 5 EP-201.
Stauffer Chemical Co.	St. Gabriel, LA	Brine purification muds, which have been washed and vacuum filtered, generated after August 27, 1985 from ther chlor-alkali manufacturing operations (EPA Hazardous Waste No. K071) that have been batch tested for mercury using the EP toxicity procedure and have been found to contain less than 0.05 ppm in mercury in the EP extract. Brine purification muds that exceed this level will be considered a hazardous waste.
Tricil Environmental Systems, Inc.	Hilliard, Ohio	Spent pickle liquor (EPA Hazardous Waste No. K062) generated by steel finishing operations of facilities within the iron and steel industry (SIC Codes 331 and 332) after November 17, 1986. To ensure that hazardous constituents are not present in the waste at levels of regulatory concern, the facility must implement a contingency testing program for the petitioned wastes. This testing program must meet the following conditions for the exclusions to be valid: (1) Each batch of treatment residue must be representatively sampled and tested using the total oil and grease test and the EP Toxicity test (or the Oily Waste EP test, if the oil and grease content of the waste exceeds one percent) for arsenic, barium, cadmium, chromium, lead, mercury, selenium, silver and nickel. If the extract concentrations for chromium, lead, arsenic, barium, and silver exceed 6.3 ppm; cadmium and selenium exceed 0.063 ppm; mercury levels exceed 0.013 ppm; or nickel levels exceed 2.2 ppm, the waste will be retreated or managed and disposed as a hazardous waste under 40 CFR Parts 262 to 265 and the permitting standards of 40 CFR 270. (2) Each batch of treatment residue must be tested for reactive and leachable cyanide. If the reactive cyanide levels exceed 250 ppm; or leachable cyanide levels (using ther EP Toxicity test without acetic acid adjustment) exceed 1.26 ppm, the waste must be retreated or managed and disposed as hazardous waste under 40 CFR Parts 262 to 265 and the permitting standards of 40 CFR Part 270. (3) Each batch of waste must be tested for the total content of the following organic toxicants. If the total content of any of the constituents exceeds the maximum levels shown, the waste must be managed and disposed as a hazardous waste under 40 CFR Parts 262 and 265 and the permitting standards of 40 CFR Part 270. Compound and Maximum Acceptable Levels (ppm) Acrolein, 56.8 Anthracene, 76.8 Benzene, 0.106 p-Chloro-m-cresol, 133 1,1-Dichloroethane, 0.01 Fluorene, 10.4 Methylenechloride, 8.2 Methyl ethyl ketone, 326 n-Nitrosodiphenylamine, 11.9 Phenanthrene, 14 Tetrachloroethylene, 0.188 Trichloroethylene, 0.59 Chloroform, 0.013 1,2-Dichloroethane, 0.0083 1,2-trans-Dichloroethylene, 231

TABLE 2—WASTES EXCLUDED FROM SPECIFIC SOURCES—Continued

Facility	Address	Waste description
		2,4-Dimethylphenol, 12.5 Vinyl chloride, 0.18 1,2-Diphenyl hydrazine, 0.001 (4) A grab sample must be collected from each batch to form one monthly composite sample, which must be tested using GC/MS analysis for the organic compounds shown above, as well as the remaining organics on the priority pollutant list (see 47 FR 52309, November 19, 1982, Appendix A-126 Priority Pollutants). (5) The test data from conditions 1-4 must be kept on file at the facility for inspection purposes and must be compiled, summarized, and submitted to the Administrator by certified mail on a semiannual basis. The Agency will review this information and if needed, will propose to modify or withdraw the exclusion. The organics testing described in conditions 3 and 4 above is not required until May 18, 1987. The Agency's decision to conditionally exclude the treatment residue generated from the wastewater treatment system at this facility applies only to the wastewater treatment residue described in this petition.
Tricil Environmental System, Inc.	Muskegon, Michigan.	Spent pickle liquor (EPA Hazardous Waste No. K062) generated by steel finishing operations of facilities within the iron and steel industry (SIC Codes 331 and 332); after November 17, 1986. To ensure that hazardous constituents are not present in the waste at levels of regulatory concern, the facility must implement a contingency testing program for the petitioned wastes. This testing program must meet the following conditions for the exclusion to be valid: (1) Each batch of treatment residue must be representatively sampled and tested using the total oil and grease test and the EP Toxicity test (or the Oily Waste EP test, if the oil and grease content of the waste exceeds one percent) for arsenic, barium, cadmium, chromium, lead, mercury, selenium, silver and nickel. If the extract concentrations for chromium, lead, arsenic, barium, and silver exceed 6.3 ppm, cadmium and selenium exceed 0.063 ppm; mercury levels exceed 0.013 ppm; or nickel levels exceed 2.2 ppm, the waste will be retreated or managed and disposed as a hazardous waste under 40 CFR Parts 262 to 265 and the permitting standards of 40 CFR 270. (2) Each batch of treatment residue must be tested for reactive and leachable cyanide. If the reactive cyanide levels exceed 250 ppm; or leachable cyanide levels (using the EP Toxicity test without acetic acid adjustment) exceed 1.26 ppm, the waste must be retreated or managed and disposed as hazardous waste under 40 CFR Parts 262 to 265 and the permitting standards of 40 CFR Part 270. (3) Each batch of waste must be tested for the total content of the following organic toxicants. If the total content of any of the constituents exceeds the maximum levels shown, the waste must be managed and disposed as a hazardous waste under 40 CFR Parts 262 and 265 and the permitting standards of 40 CFR Part 270: Compound and Maximum Acceptable Levels (ppm) Acrolein, 56.8 Anthracene, 76.8 Benzene, 0.106 p-Chloro-m-cresol, 133 1,1-Dichloroethane, 0.01 Fluorene, 10.4 Methylenechloride, 8.2 Methyl ethyl ketone, 326 n-Nitrosodiphenylamine, 11.9 Phenanthrene, 14 Tetrachloroethylene, 0.188 Trichloroethylene, 0.59 Chloroform, 0.013 1,2-Dichloroethane, 0.0083 1,2-trans-Dichloroethylene, 231 2,4-Dimethylphenol, 12.5 Vinyl chloride, 0.18 1,2-Diphenyl hydrazine, 0.001 (4) A grab sample must be collected from each batch to form one monthly composite sample, which must be tested using GC/MS analysis for the organic compounds shown above, as well as the remaining organics on the priority pollutant list (see 47 FR 52309, November 19, 1982, Appendix A-126 Priority Pollutants). (5) The test data from conditions 1-4 must be kept on file at the facility for inspection purposes and must be compiled, summarized, and submitted to the Administrator by certified mail on a semiannual basis. The Agency will review this information and if needed, will propose to modify or withdraw the exclusion. The organics testing described in conditions 3 and 4 above is not required until May 18, 1987. The Agency's decision to conditionally exclude the treatment residue generated from the wastewater treatment system at this facility applies only to the wastewater treatment residue described in this petition.

TABLE 2—WASTES EXCLUDED FROM SPECIFIC SOURCES—Continued

Facility	Address	Waste description
Vulcan Materials Company.	Port Edwards, WI.	Brine purification muds (EPA Hazardous Waste No. K071) generated from the mercury cell process in chlorine production, where separately prepurified brine is not used after November 17, 1986. To assure that mercury levels in this waste are maintained at acceptable levels, the following conditions apply to this exclusion: Each batch of treated brine clarifier muds and saturator insolubles must be tested (by the extraction procedure) prior to disposal and the leachate concentration of mercury must be less than or equal to 0.0129 ppm. If the waste does not meet this requirement, then it must be re-treated or disposed of as hazardous. This exclusion does not apply to wastes for which either of these conditions is not satisfied.

TABLE 3—WASTES EXCLUDED FROM COMMERCIAL CHEMICAL PRODUCTS, OFF-SPECIFICATION SPECIES, CONTAINER RESIDUES, AND SOIL RESIDUES THEREOF

Facility	Address	Waste description
Union Carbide Corp.	Taft, LA	Contaminated soil (approximately 11,000 cubic yards), which contains acrolein in concentrations of less than 9 ppm.

[49 FR 37070, Sept. 21, 1984]

EDITORIAL NOTE: For FEDERAL REGISTER citations affecting Appendix IX of Part 261, see the List of CFR Sections Affected in the Finding Aids section of this volume.

APPENDIX X—METHOD OF ANALYSIS FOR CHLORINATED DIBENZO-P-DIOXINS AND -DIBENZOFURANS [1, 2, 3, 4]

Method 8280

1. *Scope and Application*

1.1 This method measures the concentration of chlorinated dibenzo-p-dioxins and chlorinated dibenzofurans in chemical wastes including still bottoms, filter aids, sludges, spent carbon, and reactor residues, and in soils.

1.2 The sensitivity of this method is dependent upon the level of interferences.

1.3 This method is recommended for use only by analysts experienced with residue analysis and skilled in mass spectral analytical techniques.

1.4 Because of the extreme toxicity of these compounds, the analyst must take necessary precautions to prevent exposure to himself, or to others, of materials known or believed to contain CDDs or CDFs.

2. *Summary of the Method*

2.1 This method is an analytical extraction cleanup procedure, and capillary column gas chromatograph-low resolution mass spectrometry method, using capillary column GC/MS conditions and internal standard techniques, which allow for the measurement of PCDDs and PCDFs in the extract.

2.2 If interferences are encountered, the method provides selected general purpose cleanup procedures to aid the analyst in their elimination.

3. *Interferences*

3.1 Solvents, reagents, glassware, and other sample processing hardware may yield discrete artifacts and/or elevated baselines

[1] This method is appropriate for the analysis of tetra-, penta-, and hexachlorinated dibenzo-p-dioxins and -dibenzofurans.

[2] Analytical protocol for determination of TCDDs in phenolic chemical wastes and soil samples obtained from the proximity of chemical dumps. T.O. Tiernan and M. Taylor. Brehm Laboratory, Wright State University, Dayton, OH 45435.

[3] Analytical protocol for determination of chlorinated dibenzo-p-dioxins and chlorinated dibenzofurans in river water. T.O. Tiernan and M. Taylor. Brehm Laboratory, Wright State University, Dayton, OH 45435.

[4] In general, the techniques that should be used to handle these materials are those which are followed for radioactive or infectious laboratory materials. Assistance in evaluating laboratory practices may be obtained from industrial hygienists and persons specializing in safe laboratory practices. Typical infectious waste incinerators are probably not satisfactory devices for disposal of materials highly contaminated with CDDs or CDFs. Safety instructions are outlined in EPA Test Method 613(4.0)

See also: (1) "Program for monitoring potential contamination in the laboratory following the handling and analyses of chlorinated dibenzo-p-dioxins and dibenzofurans" by F. D. Hileman et al., *In:* Human and Environmental Risks of Chlorinated Dioxins and Related Compounds, R.E. Tucker, et al, eds., Plenum Publishing Corp., 1983. 2) Safety procedures outlined in EPA Method 613, Federal Register volume 44, No. 233, December 3, 1979.

causing misinterpretation of gas chromatograms. All of these materials must be demonstrated to be free from interferences under the conditions of the analysis by running method blanks. Specific selection of reagents and purification of solvents by distillation in all-glass systems may be required.

3.2 Interferences co-extracted from the samples will vary considerably from source to source, depending upon the diversity of the industry being sampled. PCDD is often associated with other interfering chlorinated compounds such as PCB's which may be at concentrations several orders of magnitude higher than that of PCDD. While general cleanup techniques are provided as part of this method, unique samples may require additional cleanup approaches to achieve the sensitivity stated in Table 1.

TABLE 1—GAS CHROMATOGRAPHY OF TCDD

Column	Retention time (min.)	Detection limit (µg/kg)[1]
Glass capillary	9.5	0.003

[1] Detection limit for liquid samples is 0.003 µg/l. This is calculated from the minimum detectable GC response being equal to five times the GC background noise assuming a 1 ml effective final volume of the 1 liter sample extract, and a GC injection of 5 microliters. Detection levels apply to both electron capture and GC/MS detection. For further details see 44 FR 69526 (December 3, 1979).

3.3 The other isomers of tetrachlorodibenzo-*p*-dioxin may interfere with the measurement of 2,3,7,8-TCDD. Capillary column gas chromatography is required to resolve those isomers that yield virtually identical mass fragmentation patterns.

4. *Apparatus and Materials*

4.1. Sampling equipment for discrete or composite sampling.

4.1.1 Grab sample bottle—amber glass, 1-liter or 1-quart volume. French or Boston Round design is recommended. The container must be washed and solvent rinsed before use to minimize interferences.

4.1.2. Bottle caps—threaded to screw on to the sample bottles. Caps must be lined with Teflon. Solvent washed foil, used with the shiny side towards the sample, may be substituted for the Teflon if sample is not corrosive.

4.1.3. Compositing equipment—automatic or manual composing system. No tygon or rubber tubing may be used, and the system must incorporate glass sample containers for the collection of a minimum of 250 ml. Sample containers must be kept refrigerated after sampling.

4.2 Water bath—heated, with concentric ring cover, capable of temperature control (±2 °C). The bath should be used in a hood.

4.3 Gas chromatograph/mass spectrometer data system.

4.3.1 Gas chromatograph: An analytical system with a temperature-programmable gas chromatograph and all required accessories including syringes, analytical columns, and gases.

4.3.2 Column: SP-2250 coated on a 30 m long × 0.25 mm I.D. glass column (Supelco No. 2-3714 or equivalent). Glass capillary column conditions: Helium carrier gas at 30 cm/sec linear velocity run splitless. Column temperature is 210 °C.

4.3.3 Mass spectrometer: Capable of scanning from 35 to 450 amu every 1 sec or less, utilizing 70 volts (nominal) electron energy in the electron impact ionization mode and producing a mass spectrum which meets all the criteria in Table 2 when 50 ng of decafluorotriphenyl-phosphine (DFTPP) is injected through the GC inlet. The system must also be capable of selected ion monitoring (SIM) for at least 4 ions simultaneously, with a cycle time of 1 sec or less. Minimum integration time for SIM is 100 ms. Selected ion monitoring is verified by injecting .015 ng of TCDD Cl^{37} to give a minimum signal to noise ratio of 5 to 1 at mass 328.

TABLE 2—DFTPP KEY IONS AND ION ABUNDANCE CRITERIA[1]

Mass	Ion abundance criteria
51	30–60% of mass 198.
68	Less than 2% of mass 69.
70	Less than 2% of mass 69.
127	40–60% of mass 198.
197	Less than 1% of mass 198.
198	Base peak, 100% relative abundance.
199	5–9% of mass 198.
275	10–30% of mass 198.
365	Greater than 1% of mass 198.
441	Present but less than mass 443.
442	Greater than 40% of mass 198.
443	17–23% of mass 442.

[1] J. W. Eichelberger, L.E. Harris, and W.L. Budde. 1975. Reference compound to calibrate ion abundance measurement in gas chromatography-mass spectrometry. Analytical Chemistry 47:995.

4.3.4 GC/MS interface: Any GC-to-MS interface that gives acceptable calibration points at 50 ng per injection for each compound of interest and achieves acceptable tuning performance criteria (see Sections 6.1 through 6.3) may be used. GC-to-MS interfaces constructed of all glass or glass-lined materials are recommended. Glass can be deactivated by silanizing with dichlorodimethylsilane. The interface must be capable of transporting at least 10 ng of the components of interest from the GC to the MS.

4.3.5 Data system: A computer system must be interfaced to the mass spectrometer. The system must allow the continuous acquisition and storage on machine-readable media of all mass spectra obtained throughout the duration of the chromatographic program. The computer must have software that can search any GC/MS data file for ions of a specific mass and that can plot such ion abundances versus time or scan number. This type of plot is defined as an Extracted Ion Current Profile (EICP). Software must also be able to integrate the abundance, in any EICP, between specified time or scan number limits.

4.4 Pipettes-Disposable, Pasteur, 150 mm long × 5 mm ID (Fisher Scientific Co., No. 13-678-6A or equivalent).

4.5 Flint glass bottle (Teflon-lined screw cap).

4.6 Reacti-vial (silanized) (Pierce Chemical Co.).

5. *Reagents*

5.1 Potassium hydroxide-(ACS), 2% in distilled water.

5.2 Sulfuric acid-(ACS), concentrated.

5.3 Methylene chloride, hexane, benzene, petroleum ether, methanol, tetradecane-pesticide quality or equivalent.

5.4 Prepare stock standard solutions of TCDD and ^{37}Cl-TCDD (molecular weight 328) in a glove box. The stock solutions are stored in a glovebox, and checked frequently for signs of degradation or evaporation, especially just prior to the preparation of working standards.

5.5 Alumina-basic, Woelm; 80/200 mesh. Before use activate overnight at 600°C, cool to room temperature in a dessicator.

5.6 Prepurified nitrogen gas

6.0 *Calibration*

6.1 Before using any cleanup procedure, the analyst must process a series of calibration standards through the procedure to validate elution patterns and the absence of interferences from reagents.

6.2 Prepare GC/MS calibration standards for the internal standard technique that will allow for measurement of relative response factors of at least three CDD/^{37}CDD ratios. Thus, for TCDDs, at least three TCDD/^{37}Cl-TCDD and TCDF/^{37}Cl-TCDF must be determined.[6] The ^{37}Cl-TCDD/F concentration in the standard should be fixed and selected to yield a reproducible response at the most sensitive setting of the mass spectrometer. Response factors for PCDD and HxCDD may be determined by measuring the response of the tetrachloro-labelled compounds relative to that of the unlabelled 1,2,3,4- or 2,3,7,8-TCDD, 1,2,3,4,7-PCDD or 1,2,3,4,7,8-HxCDD, which are commercially available.[6]

6.3 Assemble the necessary GC/MS apparatus and establish operating parameters equivalent to those indicated in Section 11.1 of this method. Calibrate the GC/MS system according to Eichelberger, et al. (1975) by the use of decafluorotriphenyl phosphine (DFTPP). By injecting calibration standards, establish the response factors for CDDs *vs.* ^{37}Cl-TCDD, and for CDFs *vs.* ^{37}Cl-TCDF. The detection limit provided in Table 1 should be verified by injecting .015 ng of ^{37}Cl-TCDD which should give a minimum signal to noise ratio of 5 to 1 at mass 328.

7. *Quality Control*

7.1 Before processing any samples, the analyst should demonstrate through the analysis of a distilled water method blank, that all glassware and reagents are interference-free. Each time a set of samples is extracted, or there is a change in reagents, a method blank should be processed as a safeguard against laboratory contamination.

7.2 Standard quality assurance practices must be used with this method. Field replicates must be collected to measure the precision of the sampling technique. Laboratory replicates must be analyzed to establish the precision of the analysis. Fortified samples must be analyzed to establish the accuracy of the analysis.

8. *Sample Collection, Preservation, and Handling*

8.1 Grab and composite samples must be collected in glass containers. Conventional sampling practices should be followed, except that the bottle must not be prewashed with sample before collection. Composite samples should be collected in glass containers in accordance with the requirements of the RCRA program. Sampling equipment must be free of tygon and other potential sources of contamination.

8.2 The samples must be iced or refrigerated from the time of collection until extraction. Chemical preservatives should not be used in the field unless more than 24 hours will elapse before delivery to the laboratory. If an aqueous sample is taken and the sample will not be extracted within 48 hours of collection, the sample should be

[6] ^{37}Cl-labelled 2,3,7,8-TCDD and 2,3,7,8-TCDF are available from K.O.R. Isotopes, and Cambridge Isotopes, Inc., Cambridge, MA. Proper standardization requires the use of a specific labelled isomer for each congener to be determined. However, the only labelled isomers readily available are ^{37}Cl-2,3,7,8-TCDD and ^{37}Cl-2,3,7,8-TCDF. This method therefore uses these isomers as surrogates for the CDDs and CDFs. When other labelled CDDs and CDFs are available, their use will be required.

[6] This procedure is adopted because standards are not available for most of the CDDs and CDFs, and assumes that all the congeners will show the same response as the unlabelled congener used as a standard. Although this assumption may not be true in all cases, the error will be small.

adjusted to a pH range of 6.0-8.0 with sodium hydroxide or sulfuric acid.

8.3 All samples must be extracted within 7 days and completely analyzed within 30 days of collection.

9. *Extraction and Cleanup Procedures*

9.1 Use an aliquot of 1-10 g sample of the chemical waste or soil to be analyzed. Soils should be dried using a stream of prepurified nitrogen and pulverized in a ball-mill or similar device. Perform this operation in a clear area with proper hood space. Transfer the sample to a tared 125 ml flint glass bottle (Teflon-lined screw cap) and determine the weight of the sample. Add an appropriate quantity of ^{37}Cl-labelled 2,3,7,8-TCDD (adjust the quantity according to the required minimum detectable concentration), which is employed as an internal standard.

9.2 Extraction

9.2.1 Extract chemical waste samples by adding 10 ml methanol, 40 ml petroleum ether, 50 ml doubly distilled water, and then shaking the mixture for 2 minutes. Tars should be completely dissolved in any of the recommended neat solvents. Activated carbon samples must be extracted with benzene using method 3540 in SW-846 (Test Methods for Evaluating Solid Waste—Physical/Chemical Methods, available from G.P.O. Stock #055-022-81001-2). Quantitatively transfer the organic extract or dissolved sample to a clean 250 ml flint glass bottle (Teflon lined screw cap), add 50 ml doubly distilled water and shake for 2 minutes. Discard the aqueous layer and proceed with Step 9.3.

9.2.2 Extract soil samples by adding 40 ml of petroleum ether to the sample, and then shaking for 20 minutes. Quantitatively transfer the organic extract to a clean 250 ml flint glass bottle (Teflon-lined screw cap), add 50 ml doubly distilled water and shake for 2 minutes. Discard the aqueous layer and proceed with Step 9.3.

9.3 Wash the organic layer with 50 ml of 20% aqueous potassium hydroxide by shaking for 10 minutes and then remove and discard the aqueous layer.

9.4 Wash the organic layer with 50 ml of doubly distilled water by shaking for 2 minutes, and discard the aqueous layer.

9.5 Cautiously add 50 ml concentrated sulfuric acid and shake for 10 minutes. Allow the mixture to stand until layers separate (approximately 10 minutes), and remove and discard the acid layer. Repeat acid washing until no color is visible in the acid layer.

9.6 Add 50 ml of doubly distilled water to the organic extract and shake for 2 minutes. Remove and discard the aqueous layer and dry the organic layer by adding 10g of anhydrous sodium sulfate.

9.7 Concentrate the extract to incipient dryness by heating in a 55° C water bath and simultaneously flowing a stream of prepurified nitrogen over the extract. Quantitatively transfer the residue to an alumina microcolumn fabricated as follows:

9.7.1 Cut off the top section of a 10 ml disposable Pyrex pipette at the 4.0 ml mark and insert a plug of silanized glass wool into the tip of the lower portion of the pipette.

9.7.2 Add 2.8g of Woelm basic alumina (previously activated at 600° C overnight and then cooled to room temperature in a desiccator just prior to use).

9.7.3 Transfer sample extract with a small volume of methylene chloride.

9.8 Elute the microcolumn with 10 ml of 3% methylene chloride-in-hexane followed by 15 ml of 20% methylene chloride-in-hexane and discard these effluents. Elute the column with 15 ml of 50% methylene chloride-in-hexane and concentrate this effluent (55° C water bath, stream of prepurified nitrogen) to about 0.3-0.5 ml.

9.9 Quantitatively transfer the residue (using methylene chloride to rinse the container) to a silanized Reacti-Vial (Pierce Chemical Co.). Evaporate, using a stream of prepurified nitrogen, almost to dryness, rinse the walls of the vessel with approximately 0.5 ml methylene chloride, evaporate just to dryness, and tightly cap the vial. Store the vial at 5° C until analysis, at which time the sample is reconstituted by the addition of tridecane.

9.10 Approximately 1 hour before GC-MS (HRGC-LRMS) analysis, dilute the residue in the micro-reaction vessel with an appropriate quantity of tridecane. Gently swirl the tridecane on the lower portion of the vessel to ensure dissolution of the CDDs and CDFs. Analyze a sample by GC/EC to provide insight into the complexity of the problem, and to determine the manner in which the mass spectrometer should be used. Inject an appropriate aliquot of the sample into the GC-MS instrument, using a syringe.

9.11 If, upon preliminary GC-MS analysis, the sample appears to contain interfering substances which obscure the analyses for CDDs and CDFs, high performance liquid chromatographic (HPLC) cleanup of the extract is accomplished, prior to further GC-MS analysis.

10. *HPLC Cleanup Procedure*[7]

10.1 Place approximately 2 ml of hexane in a 50 ml flint glass sample bottle fitted with a Teflon-lined cap.

10.2 At the appropriate retention time, position sample bottle to collect the required fraction.

[7] For cleanup see also method #8320 or #8330, SW-846, Test Methods for Evaluating Solid Waste, Physical/Chemical Methods (1982).

10.3 Add 2 ml of 5% (w/v) sodium carbonate to the sample fraction collected and shake for one minute.

10.4 Quantitatively remove the hexane layer (top layer) and transfer to a micro-reaction vessel.

10.5 Concentrate the fraction to dryness and retain for further analysis.

11. *GC/MS Analysis*

11.1 The following column conditions are recommended: Glass capillary column conditions: SP-2250 coated on a 30 m long x 0.25 mm I.D. glass column (Supelco No. 2-3714, or equivalent) with helium carrier gas at 30 cm/sec linear velocity, run splitless. Column temperature is 210°C. Under these conditions the retention time for TCDDs is about 9.5 minutes. Calibrate the system daily with, a minimum, three injections of standard mixtures.

11.2 Calculate response factors for standards relative to ^{37}Cl-TCDD/F (see Section 12).

11.3 Analyze samples with selected ion monitoring of at least two ions from Table 3. Proof of the presence of CDD or CDF exists if the following conditions are met:

11.3.1 The retention time of the peak in the sample must match that in the standard, within the performance specifications of the analytical system.

11.3.2 The ratio of ions must agree within 10% with that of the standard.

11.3.3 The retention time of the peak maximum for the ions of interest must exactly match that of the peak.

TABLE 3—LIST OF ACCURATE MASSES MONITORED USING GC SELECTED-ION MONITORING, LOW RESOLUTION, MASS SPECTROMETRY FOR SIMULTANEOUS DETERMINATION OF TETRA-, PENTA-, AND HEXACHLORINATED DIBENZO-*p*-DIOXINS AND DIBENZOFURANS

Class of chlorinated dibenzodioxin or dibenzofuran	Number of chlorine substituents (x)	Monitored m/z for dibenzodioxins $C_{12}H_{8-x}O_2I_x$	Monitored m/z for dibenzofurans $C_{12}H_{8-x}OCl_x$	Approximate theoretical ratio expected on basis of isotopic abundance
Tetra	4	[1] 319.897	[1] 303.902	0.74
		321.894	305.903	1.00
		[2] 327.885	[2] 311.894	
		[3] 256.933		0.21
		[3] 258.930		0.20
Penta	5	[1] 353.858	[1] 337.863	0.57
		355.855	339.860	1.00
Hexa	6	389.816	373.821	1.00
		391.813	375.818	0.87

[1] Molecular ion peak.
[2] Cl_4—labelled standard peaks.
[3] Ions which can be monitored in TCDD analyses for confirmation purposes.

11.4 Quantitate the CDD and CDF peaks from the response relative to the ^{37}Cl-TCDD/F internal standards. Recovery of the internal standard should be greater than 50 percent.

11.5 If a response is obtained for the appropriate set of ions, but is outside the expected ratio, a co-eluting impurity may be suspected. In this case, another set of ions characteristic of the CDD/CDF molecules should be analyzed. For TCDD a good choice of ions is m/e 257 and m/e 259. For TCDF a good choice of ions is m/e 241 and 243. These ions are useful in characterizing the molecular structure to TCDD or TCDF. For analysis of TCDD good analytical technique would require using all four ions, m/e 257, 320, 322, and 328, to verify detection and signal to noise ratio of 5 to 1. Suspected impurities such as DDE, DDD, or PCB residues can be confirmed by checking for their major fragments. These materials can be removed by the cleanup columns. Failure to meet criteria should be explained in the report, or the sample reanalyzed.

11.6 If broad background interference restricts the sensitivity of the GC/MS analysis, the analyst should employ cleanup procedures and reanalyze by GC/MS. See section 10.0.

11.7 In those circumstances where these procedures do not yield a definitive conclusion, the use of high resolution mass spectrometry is suggested.

12. *Calculations*

12.1 Determine the concentration of individual compounds according to the formula:

$$\text{Concentration, } \mu g/gm = \frac{A \times A_s}{G \times A_{is} \times R_f}$$

where:

A = μg of internal standard added to the sample [8]

G = gm of sample extracted

A_s = area of characteristic ion of the compound being quantified.

A_{is} = area of characteristic ion of the internal standard

R_f = response factor [9]

Response factors are calculated using data obtained from the analysis of standards according to the formula:

$$Rf \frac{A_s \times C_{is}}{A_{is} \times C_s}$$

where:

C_{is} = concentration of the internal standard

C_s = concentration of the standard compound

12.2 Report results in micrograms per gram without correction for recovery data. When duplicate and spiked samples are analyzed, all data obtained should be reported.

12.3 Accuracy and Precision. No data are available at this time.

[50 FR 2001, Jan. 14, 1985]

PART 262—STANDARDS APPLICABLE TO GENERATORS OF HAZARDOUS WASTE

Subpart A—General

Sec.
262.10 Purpose, scope, and applicability.
262.11 Hazardous waste determination.
262.12 EPA identification numbers.

[8] The proper amount of standard to be used is determined from the calibration curve (See Section 6.0).

[9] If standards for PCDDs/Fs and HxCDDs/Fs are not available, response factors for ions derived from these congeners are calculated relative to ^{37}Cl-TCDD/F. The analyst may use response factors for 1,2,3,4- or 2,3,7,8-TCDD, 1,2,3,4,7-PeCDD, or 1,2,3,4,7,8-HxCDD for quantitation of TCDDs/Fs, PeCDDs/Fs and HxCDDs/Fs, respectively. Implicit in this requirement is the assumption that the same response is obtained from PCDDs/Fs ccontaining the same numbers of chlorine atoms.

Subpart B—The Manifest

262.20 General requirements.
262.21 Acquisition of manifests.
262.22 Number of copies.
262.23 Use of the manifest.

Subpart C—Pre-Transport Requirements

262.30 Packaging.
262.31 Labeling.
262.32 Marking.
262.33 Placarding.
262.34 Accumulation time.

Subpart D—Recordkeeping and Reporting

262.40 Recordkeeping.
262.41 Biennial report.
262.42 Exception reporting.
262.43 Additional reporting.
262.44 Special requirements for generators of between 100 and 1000 kg/mo.

Subpart E—Exports of Hazardous Waste

262.50 Applicability.
262.51 Farmers.
262.52 General requirements.
262.53 Notification of intent to export.
262.54 Special manifest requirements.
262.55 Exception reports.
262.56 Annual reports.
262.57 Recordkeeping.
262.58 International agreements. [Reserved]

Subpart F—Imports of Hazardous Waste

262.60 Imports of hazardous waste.

Subpart G—Farmers

262.70 Farmers.

APPENDIX—UNIFORM HAZARDOUS WASTE MANIFEST AND INSTRUCTIONS (EPA FORMS 8700-22 AND 8700-22A AND THEIR INSTRUCTIONS)

AUTHORITY: 42 U.S.C. 6906, 6912, 6922, 6923, 6924, 6925, and 6937.

SOURCE: 45 FR 33142, May 19, 1980, unless otherwise noted.

Subpart A—General

§ 262.10 Purpose, scope, and applicability.

(a) These regulations establish standards for generators of hazardous waste.

(b) A generator who treats, stores, or disposes of hazardous waste on-site must only comply with the following sections of this part with respect to that waste: Section 262.11 for determining whether or not he has a hazardous waste, § 262.12 for obtaining an EPA identification number, § 262.34 for accumulation of hazadous waste, § 262.40 (c) and (d) for recordkeeping, § 262.43 for additional reporting and if applicable, § 262.51 for farmers.

(c) Any person who imports hazardous waste into the United States must comply with the standards applicable to generators established in this part.

(d) A farmer who generates waste pesticides which are hazardous waste and who complies with all of the requirements of § 262.51 is not required to comply with other standards in this part or 40 CFR Parts 270, 264, or 265 with respect to such pesticides.

(e) A person who generates a hazardous waste as defined by 40 CFR Part 261 is subject to the compliance requirements and penalties prescribed in section 3008 of the Act if he does not comply with the requirements of this part.

(f) An owner or operator who initiates a shipment of hazardous waste from a treatment, storage, or disposal facility must comply with the generator standards established in this part.

NOTE 1: The provisions of § 262.34 are applicable to the on-site accumulation of hazardous waste by generators. Therefore, the provisions of § 262.34 only apply to owners or operators who are shipping hazardous waste which they generated at that facility.

NOTE 2: A generator who treats, stores, or disposes of hazardous waste on-site must comply with the applicable standards and permit requirements set forth in 40 CFR Parts 264, 265, and 266 and Part 270.

[45 FR 33142, May 19, 1980, as amended at 45 FR 86970, Dec. 31, 1980; 47 FR 1251, Jan. 11, 1982; 48 FR 14294, Apr. 1, 1983]

§ 262.11 Hazardous waste determination.

A person who generates a solid waste, as defined in 40 CFR 261.2, must determine if that waste is a hazardous waste using the following method:

(a) He should first determine if the waste is excluded from regulation under 40 CFR 261.4.

(b) He must then determine if the waste is listed as a hazardous waste in Subpart D of 40 CFR Part 261.

NOTE: Even if the waste is listed, the generator still has an opportunity under 40 CFR 260.22 to demonstrate to the Administrator that the waste from his particular facility or operation is not a hazardous waste.

(c) If the waste is not listed as a hazardous waste in Subpart D of 40 CFR Part 261, he must determine whether the waste is identified in Subpart C of 40 CFR Part 261 by either:

(1) Testing the waste according to the methods set forth in Subpart C of 40 CFR Part 261, or according to an equivalent method approved by the Administrator under 40 CFR 260.21; or

(2) Applying knowledge of the hazard characteristic of the waste in light of the materials or the processes used.

(d) If the waste is determined to be hazardous, the generator must refer to Parts 264, 265, 268 of this chapter for possible exclusions or restrictions pertaining to management of his specific waste.

[45 FR 33142, May 19, 1980, as amended at 45 FR 76624, Nov. 19, 1980; 51 FR 40637, Nov. 7, 1986]

§ 262.12 EPA identification numbers.

(a) A generator must not treat, store, dispose of, transport, or offer for transportation, hazardous waste without having received an EPA identification number from the Administrator.

(b) A generator who has not received an EPA identification number may obtain one by applying to the Administrator using EPA form 8700-12. Upon receiving the request the Administrator will assign an EPA identification number to the generator.

(c) A generator must not offer his hazardous waste to transporters or to treatment, storage, or disposal facilities that have not received an EPA identification number.

Subpart B—The Manifest

§ 262.20 General requirements.

(a) A generator who transports, or offers for transportation, hazardous waste for offsite treatment, storage, or disposal must prepare a Manifest OMB control number 2000-0404 on EPA form 8700-22, and, if necessary, EPA form 8700-22A, according to the instructions included in the Appendix to Part 262.

(b) A generator must designate on the manifest one facility which is permitted to handle the waste described on the manifest.

(c) A generator may also designate on the manifest one alternate facility which is permitted to handle his waste in the event an emergency prevents delivery of the waste to the primary designated facility.

(d) If the transporter is unable to deliver the hazardous waste to the designated facility or the alternate facility, the generator must either designate another facility or instruct the transporter to return the waste.

(e) The requirements of this subpart do not apply to hazardous waste produced by generators of greater than 100 kg but less than 1000 kg in a calendar month where:

(1) The waste is reclaimed under a contractual agreement pursuant to which:

(i) The type of waste and frequency of shipments are specified in the agreement;

(ii) The vehicle used to transport the waste to the recycling facility and to deliver regenerated material back to the generator is owned and operated by the reclaimer of the waste; and

(2) The generator maintains a copy of the reclamation agreement in his files for a period of at least three years after termination or expiration of the agreement.

[45 FR 33142, May 19, 1980, as amended at 49 FR 10500, Mar. 20, 1984; 51 FR 10175, Mar. 24, 1986]

§ 262.21 Acquisition of manifests.

(a) If the State to which the shipment is manifested (consignment State) supplies the manifest and requires its use, then the generator must use that manifest.

(b) If the consignment State does not supply the manifest, but the State in which the generator is located (generator State) supplies the manifest and requires its use, then the generator must use that State's manifest.

(c) If neither the generator State nor the consignment State supplies the manifest, then the generator may obtain the manifest from any source.

[49 FR 10500, Mar. 20, 1984]

§ 262.22 Number of copies.

The manifest consists of at least the number of copies which will provide the generator, each transporter, and the owner or operator of the designated facility with one copy each for their records and another copy to be returned to the generator.

§ 262.23 Use of the manifest.

(a) The generator must:

(1) Sign the manifest certification by hand; and

(2) Obtain the handwritten signature of the initial transporter and date of acceptance on the manifest; and

(3) Retain one copy, in accordance with § 262.40(a).

(b) The generator must give the transporter the remaining copies of the manifest.

(c) For shipments of hazardous waste within the United States solely by water (bulk shipments only), the generator must send three copies of the manifest dated and signed in accordance with this section to the owner or operator of the designated facility or the last water (bulk shipment) transporter to handle the waste in the United States if exported by water. Copies of the manifest are not required for each transporter.

(d) For rail shipments of hazardous waste within the United States which originate at the site of generation, the generator must send at least three copies of the manifest dated and signed in accordance with this section to:

(1) The next non-rail transporter, if any; or

(2) The designated facility if transported solely by rail; or

(3) The last rail transporter to handle the waste in the United States if exported by rail.

NOTE: See § 263.20(e) and (f) for special provisions for rail or water (bulk shipment) transporters.

[45 FR 33142, May 19, 1980, as amended at 45 FR 86973, Dec. 31, 1980]

Subpart C—Pre-Transport Requirements

§ 262.30 Packaging.

Before transporting hazardous waste or offering hazardous waste for transportation off-site, a generator must package the waste in accordance with the applicable Department of Transportation regulations on packaging under 49 CFR Parts 173, 178, and 179.

§ 262.31 Labeling.

Before transporting or offering hazardous waste for transportation off-site, a generator must label each package in accordance with the applicable Department of Transportation regulations on hazardous materials under 49 CFR Part 172.

§ 262.32 Marking.

(a) Before transporting or offering hazardous waste for transportation off-site, a generator must mark each package of hazardous waste in accordance with the applicable Department of Transportation regulations on hazardous materials under 49 CFR Part 172;

(b) Before transporting hazardous waste or offering hazardous waste for transportation off-site, a generator must mark each container of 110 gallons or less used in such transportation with the following words and information displayed in accordance with the requirements of 49 CFR 172.304:

HAZARDOUS WASTE—Federal Law Prohibits Improper Disposal. If found, contact the nearest police or public safety authority or the U.S. Environmental Protection Agency.

Generator's Name and Address ————.
Manifest Document Number ————.

§ 262.33 Placarding.

Before transporting hazardous waste or offering hazardous waste for transportation off-site, a generator must placard or offer the initial transporter the appropriate placards according to Department of Transportation regulations for hazardous materials under 49 CFR Part 172, Subpart F.

§ 262.34 Accumulation time.

(a) Except as provided in paragraphs (d), (e), and (f) of this section, a generator may accumulate hazardous waste on-site for 90 days or less without a permit or without having interim status, provided that:

(1) The waste is placed in containers and the generator complies with Subpart I of 40 CFR Part 265, or the waste is placed in tanks and the generator complies with Subpart J of 40 CFR Part 265, except § 265.197(c), and § 265.200. In addition, such a generator is exempt from all the requirements in Subparts G and H of 40 CFR Part 265, except for § 265.111 and § 265.114.

(2) The date upon which each period of accumulation begins is clearly marked and visible for inspection on each container;

(3) While being accumulated on-site, each container and tank is labeled or marked clearly with the words, "Hazardous Waste"; and

(4) The generator complies with the requirements for owners or operators in Subparts C and D in 40 CFR Part 265 and with § 265.16.

(b) A generator who accumulates hazardous waste for more than 90 days is an operator of a storage facility and is subject to the requirements of 40 CFR Parts 264 and 265 and the permit requirements of 40 CFR Part 270 unless he has been granted an extension to the 90-day period. Such extension may be granted by EPA if hazardous wastes must remain on-site for longer than 90 days due to unforeseen, temporary, and uncontrollable circumstances. An extension of up to 30 days may be granted at the discretion of the Regional Administrator on a case-by-case basis.

(c)(1) A generator may accumulate as much as 55 gallons of hazardous waste or one quart of acutely hazardous waste listed in § 261.33(e) in containers at or near any point of generation where wastes initially accumulate, which is under the control of the operator of the process generating the waste, without a permit or interim status and without complying with paragraph (a) of this section provided he:

(i) Complies with §§ 265.171, 265.172, and 265.173(a) of this chapter; and

(ii) Marks his containers either with the words "Hazardous Waste" or with other words that identify the contents of the containers.

(2) A generator who accumulates either hazardous waste or acutely hazardous waste listed in § 261.33(e) in excess of the amounts listed in paragraph (c)(1) of this section at or near any point of generation must, with respect to that amount of excess waste, comply within three days with paragraph (a) of this section or other applicable provisions of this chapter. During the three day period the generator must continue to comply with paragraphs (c)(1)(i) through (ii) of this section. The generator must mark the container holding the excess accumulation of hazardous waste with the date the excess amount began accumulating.

(d) A generator who generates greater than 100 kilograms but less than 1000 kilograms of hazardous waste in a calendar month may accumulate hazardous waste on-site for 180 days or less without a permit or without having interim status provided that:

(1) The quantity of waste accumulated on-site never exceeds 6000 kilograms;

(2) The generator complies with the requirements of Subpart I of Part 265, except § 265.176;

(3) The generator complies with the requirements of § 265.201 in Subpart J of Part 265;

(4) The generator complies with the requirements of paragraphs (a)(2) and (a)(3) of this section and the requirements of Subpart C of Part 265; and

(5) The generator complies with the following requirements:

(i) At all times there must be at least one employee either on the premises or on call (*i.e.*, available to respond to an emergency by reaching the facility within a short period of time) with the responsibility for coordinating all emergency response measures specified in paragraph (d)(5)(iv) of this section. This employee is the emergency coordinator.

(ii) The generator must post the following information next to the telephone:

(A) The name and telephone number of the emergency coordinator;

(B) Location of fire extinguishers and spill control material, and, if present, fire alarm; and

(C) The telephone number of the fire department, unless the facility has a direct alarm.

(iii) The generator must ensure that all employees are thoroughly familiar with proper waste handling and emergency procedures, relevant to their responsibilities during normal facility operations and emergencies;

(iv) The emergency coordinator or his designee must respond to any emergencies that arise. The applicable responses are as follows:

(A) In the event of a fire, call the fire department or attempt to extinguish it using a fire extinguisher;

(B) In the event of a spill, contain the flow of hazardous waste to the extent possible, and as soon as is practicable, clean up the hazardous waste and any contaminated materials or soil;

(C) In the event of a fire, explosion, or other release which could threaten human health outside the facility or when the generator has knowledge that a spill has reached surface water, the generator must immediately notify the National Response Center (using their 24-hour toll free number 800/424-8802). The report must include the following information:

(1) The name, address, and U.S. EPA Identification Number of the generator;

(2) Date, time, and type of incident (*e.g.*, spill or fire);

(3) Quantity and type of hazardous waste involved in the incident;

(4) Extent of injuries, if any; and

(5) Estimated quantity and disposition of recovered materials, if any.

(e) A generator who generates greater than 100 kilograms but less than 1000 kilograms of hazardous waste in a calendar month and who must transport his waste, or offer his waste for transportation, over a distance of 200 miles or more for off-site treatment, storage or disposal may accumulate hazardous waste on-site for 270 days or less without a permit or without having interim status provided that he

complies with the requirements of paragraph (d) of this section.

(f) A generator who generates greater than 100 kilograms but less than 1000 kilograms of hazardous waste in a calendar month and who accumulates hazardous waste in quantities exceeding 6000 kg or accumulates hazardous waste for more than 180 days (or for more than 270 days if he must transport his waste, or offer his waste for transportation, over a distance of 200 miles or more) is an operator of a storage facility and is subject to the requirements of 40 CFR Parts 264 and 265 and the permit requirements of 40 CFR Part 270 unless he has been granted an extension to the 180-day (or 270-day if applicable) period. Such extension may be granted by EPA if hazardous wastes must remain on-site for longer than 180 days (or 270 days if applicable) due to unforeseen, temporary, and uncontrollable circumstances. An extension of up to 30 days may be granted at the discretion of the Regional Administrator on a case-by-case basis.

[47 FR 1251, Jan. 11, 1982, as amended at 48 FR 14294, Apr. 1, 1983; 49 FR 49571, Dec. 20, 1984; 51 FR 10175, Mar. 24, 1986; 51 FR 25472, July 14, 1986]

Subpart D—Recordkeeping and Reporting

§ 262.40 Recordkeeping.

(a) A generator must keep a copy of each manifest signed in accordance with § 262.23(a) for three years or until he receives a signed copy from the designated facility which received the waste. This signed copy must be retained as a record for at least three years from the date the waste was accepted by the initial transporter.

(b) A generator must keep a copy of each Biennial Report and Exception Report for a period of at least three years from the due date of the report.

(c) A generator must keep records of any test results, waste analyses, or other determinations made in accordance with § 262.11 for at least three years from the date that the waste was last sent to on-site or off-site treatment, storage, or disposal.

(d) The periods or retention referred to in this section are extended automatically during the course of any unresolved enforcement action regarding the regulated activity or as requested by the Administrator.

[45 FR 33142, May 19, 1980, as amended at 48 FR 3981, Jan. 28, 1983]

§ 262.41 Biennial report.

(a) A generator who ships any hazardous waste off-site to a treatment, storage or disposal facility within the United States must prepare and submit a single copy of a Biennial Report to the Regional Administrator by March 1 of each even numbered year. The Biennial Report must be submitted on EPA Form 8700-13A, must cover generator activities during the previous year, and must include the following information:

(1) The EPA identification number, name, and address of the generator;

(2) The calendar year covered by the report;

(3) The EPA identification number, name, and address for each off-site treatment, storage, or disposal facility in the United States to which waste was shipped during the year;

(4) The name and EPA identification number of each transporter used during the reporting year for shipments to a treatment, storage or disposal facility within the United States;

(5) A description, EPA hazardous waste number (from 40 CFR Part 261, Subpart C or D), DOT hazard class, and quantity of each hazardous waste shipped off-site for shipments to a treatment, storage or disposal facility within the United States. This information must be listed by EPA identification number of each such off-site facility to which waste was shipped.

(6) A description of the efforts undertaken during the year to reduce the volume and toxicity of waste generated.

(7) A description of the changes in volume and toxicity of waste actually achieved during the year in comparison to previous years to the extent such information is available for years prior to 1984.

(8) The certification signed by the generator or authorized representative.

(b) Any generator who treats, stores, or disposes of hazardous waste on-site must submit a biennial report covering those wastes in accordance with the provisions of 40 CFR Parts 270, 264, 265, and 266. Reporting for exports of hazardous waste is not required on the Biennial Report form. A separate annual report requirement is set forth at 40 CFR 262.56.

[48 FR 3981, Jan. 28, 1983, as amended at 48 FR 14294, Apr. 1, 1983; 50 FR 28746, July 15, 1985; 51 FR 28682, Aug. 8, 1986]

§ 262.42 Exception reporting.

(a)(1) A generator of greater than 1000 kilograms of hazardous waste in a calendar month who does not receive a copy of the manifest with the handwritten signature of the owner or operator of the designated facility within 35 days of the date the waste was accepted by the initial transporter must contact the transporter and/or the owner or operator of the designated facility to determine the status of the hazardous waste.

(2) A generator of greater than 1000 kilograms of hazardous waste in a calendar month must submit an Exception Report to the EPA Regional Administrator for the Region in which the generator is located if he has not received a copy of the manifest with the handwritten signature of the owner or operator of the designated facility within 45 days of the date the waste was accepted by the initial transporter. The Exception Report must include:

(i) A legible copy of the manifest for which the generator does not have confirmation of delivery;

(ii) A cover letter signed by the generator or his authorized representative explaining the efforts taken to locate the hazardous waste and the results of those efforts.

(b) A generator of greater than 100 kilograms but less than 1000 kilograms of hazardous waste in a calendar month who does not receive a copy of the manifest with the handwritten signature of the owner or operator of the designated facility within 60 days of the date the waste was accepted by the initial transporter must submit a legible copy of the manifest, with some indication that the generator has not received confirmation of delivery, to the EPA Regional Administrator for the Region in which the generator is located.

NOTE: The submission to EPA need only be a handwritten or typed note on the manifest itself, or on an attached sheet of paper, stating that the return copy was not received.

(Information collection requirements approved by the Office of Management and Budget under control number 2050-0039)

[52 FR 35898, Sept. 23, 1987]

§ 262.43 Additional reporting.

The Administrator, as he deems necessary under sections 2002(a) and 3002(6) of the Act, may require generators to furnish additional reports concerning the quantities and disposition of wastes identified or listed in 40 CFR Part 261.

§ 262.44 Special requirements for generators of between 100 and 1000 kg/mo.

A generator of greater than 100 kilograms but less than 1000 kilograms of hazardous waste in a calendar month is subject only to the following requirements in this subpart:

(a) Section 262.40(a), (c), and (d), recordkeeping;

(b) Section 262.42(b), exception reporting; and

(c) Section 262.43, additional reporting.

(Information collection requirements approved by the Office of Management and Budget under control number 2050-0039)

[52 FR 35899, Sept. 23, 1987]

Subpart E—Exports of Hazardous Waste

SOURCE: 51 FR 28682, Aug. 8, 1986, unless otherwise noted.

§ 262.50 Applicability.

This subpart establishes requirements applicable to exports of hazardous waste. Except to the extent § 262.58 provides otherwise, a primary exporter of hazardous waste must comply with the special requirements

of this subpart and a transporter transporting hazardous waste for export must comply with applicable requirements of Part 263. Section 262.58 sets forth the requirements of international agreements between the United States and receiving countries which establish different notice, export, and enforcement procedures for the transportation, treatment, storage and disposal of hazardous waste for shipments between the United States and those countries.

§ 262.51 Farmers.

A farmer disposing of waste pesticides from his own use which are hazardous wastes is not required to comply with the standards in this part or other standards in 40 CFR Part 264, 265, 268, or 270 for those wastes provided he triple rinses each emptied pesticide container in accordance with § 261.7(b)(3) and disposes of the pesticide residues on his own farm in a manner consistent with the disposal instructions on the pesticide label.

[52 FR 25787, July 8, 1987]

§ 262.52 General requirements.

Exports of hazardous waste are prohibited except in compliance with the applicable requirements of this Subpart and Part 263. Exports of hazardous waste are prohibited unless:

(a) Notification in accordance with § 262.53 has been provided;

(b) The receiving country has consented to accept the hazardous waste;

(c) A copy of the EPA Acknowledgment of Consent to the shipment accompanies the hazardous waste shipment and, unless exported by rail, is attached to the manifest (or shipping paper for exports by water (bulk shipment)).

(d) The hazardous waste shipment conforms to the terms of the receiving country's written consent as reflected in the EPA Acknowledgment of Consent.

(Approved by the Office of Management and Budget under control number 2050-0035)

§ 262.53 Notification of intent to export.

(a) A primary exporter of hazardous waste must notify EPA of an intended export before such waste is scheduled to leave the United States. A complete notification should be submitted sixty (60) days before the initial shipment is intended to be shipped off site. This notification may cover export activities extending over a twelve (12) month or lesser period. The notification must be in writing, signed by the primary exporter, and include the following information:

(1) Name, mailing address, telephone number and EPA ID number of the primary exporter;

(2) By consignee, for each hazardous waste type:

(i) A description of the hazardous waste and the EPA hazardous waste number (from 40 CFR Part 261, Subparts C and D), U.S. DOT proper shipping name, hazard class and ID number (UN/NA) for each hazardous waste as identified in 49 CFR Parts 171 through 177;

(ii) The estimated frequency or rate at which such waste is to be exported and the period of time over which such waste is to be exported.

(iii) The estimated total quantity of the hazardous waste in units as specified in the instructions to the Uniform Hazardous Waste Manifest Form (8700-22);

(iv) All points of entry to and departure from each foreign country through which the hazardous waste will pass;

(v) A description of the means by which each shipment of the hazardous waste will be transported (e.g., mode of transportation vehicle (air, highway, rail, water, etc.), type(s) of container (drums, boxes, tanks, etc.));

(vi) A description of the manner in which the hazardous waste will be treated, stored or disposed of in the receiving country (e.g., land or ocean incineration, other land disposal, ocean dumping, recycling);

(vii) The name and site address of the consignee and any alternate consignee; and

(viii) The name of any transit countries through which the hazardous waste will be sent and a description of the approximate length of time the hazardous waste will remain in such country and the nature of its handling while there;

Please print or type (Form designed for use on elite (12 pitch) typewriter.)

Form Approved. OMB No 2050-0039 Expires 9-30-88

UNIFORM HAZARDOUS WASTE MANIFEST

1. Generator's US EPA ID No | Manifest Document No | 2. Page 1 of | Information in the shaded areas is not required by Federal law

3. Generator's Name and Mailing Address | A. State Manifest Document Number

4. Generator's Phone ( ) | B. State Generator's ID

5. Transporter 1 Company Name | 6. US EPA ID Number | C. State Transporter's ID

D. Transporter's Phone

7. Transporter 2 Company Name | 8. US EPA ID Number | E. State Transporter's ID

F. Transporter's Phone

9. Designated Facility Name and Site Address | 10. US EPA ID Number | G. State Facility's ID

H. Facility's Phone

11. US DOT Description (Including Proper Shipping Name, Hazard Class, and ID Number)	12. Containers No	Type	13. Total Quantity	14. Unit Wt./Vol.	I. Waste No
a.					
b.					
c.					
d.					

J. Additional Descriptions for Materials Listed Above | K. Handling Codes for Wastes Listed Above

15. Special Handling Instructions and Additional Information

16. GENERATOR'S CERTIFICATION: I hereby declare that the contents of the consignment are fully and accurately described above by proper shipping name and are classified, packed, marked, and labeled, and are in all respects in proper condition for transport by highway according to applicable international and national government regulations.

If I am a large quantity generator, I certify that I have a program in place to reduce the volume and toxicity of waste generated to the degree I have determined to be economically practicable and that I have selected the practicable method of treatment, storage, or disposal currently available to me which minimizes the present and future threat to human health and the environment; OR, if I am a small quantity generator, I have made a good faith effort to minimize my waste generation and select the best waste management method that is available to me and that I can afford.

Printed/Typed Name | Signature | Month Day Year

TRANSPORTER

17. Transporter 1 Acknowledgement of Receipt of Materials

Printed/Typed Name | Signature | Month Day Year

18. Transporter 2 Acknowledgement of Receipt of Materials

Printed/Typed Name | Signature | Month Day Year

FACILITY

19. Discrepancy Indication Space

20. Facility Owner or Operator: Certification of receipt of hazardous materials covered by this manifest except as noted in Item 19.

Printed/Typed Name | Signature | Month Day Year

EPA Form 8700-22 (Rev. 9-86) Previous editions are obsolete

GENERATORS

Item 1. Generator's U.S. EPA ID Number—Manifest Document Number

Enter the generator's U.S. EPA twelve digit identification number and the unique five digit number assigned to this Manifest (e.g., 00001) by the generator.

Item 2. Page 1 of ——

Enter the total number of pages used to complete this Manifest, i.e., the first page (EPA Form 8700-22) plus the number of Continuation Sheets (EPA Form 8700-22A), if any.

Item 3. Generator's Name and Mailing Address

Enter the name and mailing address of the generator. The address should be the location that will manage the returned Manifest forms.

Item 4. Generator's Phone Number

Enter a telephone number where an authorized agent of the generator may be reached in the event of an emergency.

Item 5. Transporter 1 Company Name

Enter the company name of the first transporter who will transport the waste.

Item 6. U.S. EPA ID Number

Enter the U.S. EPA twelve digit identification number of the first transporter identified in item 5.

Item 7. Transporter 2 Company Name

If applicable, enter the company name of the second transporter who will transport the waste. If more than two transporters are used to transport the waste, use a Continuation Sheet(s) (EPA Form 8700-22A) and list the transporters in the order they will be transporting the waste.

Item 8. U.S. EPA ID Number

If applicable, enter the U.S. EPA twelve digit identification number of the second transporter identified in item 7.

NOTE: If more than two transporters are used, enter each additional transporter's company name and U.S. EPA twelve digit identification number in items 24-27 on the Continuation Sheet (EPA Form 8700-22A). Each Continuation Sheet has space to record two additional transporters. Every transporter used between the generator and the designated facility must be listed.

Item 9. Designated Facility Name and Site Address

Enter the company name and site address of the facility designated to receive the waste listed on this Manifest. The address must be the site address, which may differ from the company mailing address.

Item 10. U.S. EPA ID Number

Enter the U.S. EPA twelve digit identification number of the designated facility identified in item 9.

Item 11. U.S. DOT Description [Including Proper Shipping Name, Hazard Class, and ID Number (UN/NA)]

Enter the U.S. DOT Proper Shipping Name, Hazard Class, and ID Number (UN/NA) for each waste as identified in 49 CFR 171 through 177.

NOTE: If additional space is needed for waste descriptions, enter these additional descriptions in item 28 on the Continuation Sheet (EPA Form 8700-22A).

Item 12. Containers (No. and Type)

Enter the number of containers for each waste and the appropriate abbreviation from Table I (below) for the type of container.

Table I—Types of Containers

DM = Metal drums, barrels, kegs
DW = Wooden drums, barrels, kegs
DF = Fiberboard or plastic drums, barrels, kegs
TP = Tanks portable
TT = Cargo tanks (tank trucks)
TC = Tank cars
DT = Dump truck
CY = Cylinders
CM = Metal boxes, cartons, cases (including roll-offs)
CW = Wooden boxes, cartons, cases
CF = Fiber or plastic boxes, cartons, cases
BA = Burlap, cloth, paper or plastic bags

Item 13. Total Quantity

Enter the total quantity of waste described on each line.

Item 14. Unit (Wt./Vol.)

Enter the appropriate abbreviation from Table II (below) for the unit of measure.

Table II—Units of Measure

G = Gallons (liquids only)
P = Pounds
T = Tons (2000 lbs)
Y = Cubic yards
L = Liters (liquids only)
K = Kilograms
M = Metric tons (1000 kg)
N = Cubic meters

Item 15. Special Handling Instructions and Additional Information

Generators may use this space to indicate special transportation, treatment, storage, or disposal information or Bill of Lading information. States may not require additional, new, or different information in this space. For international shipments, generators must enter in this space the point of departure (City and State) for those shipments destined for treatment, storage, or disposal outside the jurisdiction of the United States.

Item 16. Generator's Certification

The generator must read, sign (by hand), and date the certification statement. If a mode *other than* highway is used, the word "highway" should be lined out and the appropriate mode (rail, water, or air) inserted in the space below. If another mode *in addition to* the highway mode is used, enter the appropriate additional mode (e.g., *and rail*) in the space below.

Primary exporters shipping hazardous wastes to a facility located outside of the United States must add to the end of the first sentence of the certification the following words "and conforms to the terms of the EPA Acknowledgment of Consent to the shipment."

In signing the waste minimization certification statement, those generators who have not been exempted by statute or regulation from the duty to make a waste minimization certification under section 3002(b) of RCRA are also certifying that they have complied with the waste minimization requirements.

Generators may preprint the words, "On behalf of" in the signature block or may hand write this statement in the signature block prior to signing the generator certifications.

NOTE: All of the above information *except* the handwritten signature required in item 16 may be preprinted.

* * * * *

TRANSPORTERS

Item 17. Transporter 1 Acknowledgement of Receipt of Materials

Enter the name of the person accepting the waste on behalf of the first transporter. That person must acknowledge acceptance of the waste described on the Manifest by signing and entering the date of receipt.

Item 18. Transporter 2 Acknowledgement of Receipt of Materials

Enter, if applicable, the name of the person accepting the waste on behalf of the second transporter. That person must acknowledge acceptance of the waste described on the Manifest by signing and entering the date of receipt.

NOTE: International Shipments—Transporter Responsibilities.

Exports—Transporters must sign and enter the date the waste left the United States in item 15 of Form 8700-22.

Imports—Shipments of hazardous waste regulated by RCRA and transported into the United States from another country must upon entry be accompanied by the U.S. EPA Uniform Hazardous Waste Manifest. Transporters who transport hazardous waste into the United States from another country are responsible for completing the Manifest (40 CFR 263.10(c)(1)).

Owners and Operators of Treatment, Storage, or Disposal Facilities

Item 19. Discrepancy Indication Space

The authorized representative of the designated (or alternate) facility's owner or operator must note in this space any significant discrepancy between the waste described on the Manifest and the waste actually received at the facility.

Owners and operators of facilities located in unauthorized States (i.e., the U.S. EPA administers the hazardous waste management program) who cannot resolve significant discrepancies within 15 days of receiving the waste must submit to their Regional Administrator (see list below) a letter with a copy of the Manifest at issue describing the discrepancy and attempts to reconcile it (40 CFR 264.72 and 265.72).

Owners and operators of facilities located in authorized States (i.e., those States that have received authorization from the U.S. EPA to administer the hazardous waste program) should contact their State agency for information on State Discrepancy Report requirements.

EPA Regional Administrators

Regional Administrator, U.S. EPA Region I, J.F. Kennedy Fed. Bldg., Boston, MA 02203
Regional Administrator, U.S. EPA Region II, 26 Federal Plaza, New York, NY 10278
Regional Administrator, U.S. EPA Region III, 6th and Walnut Sts., Philadelphia, PA 19106
Regional Administrator, U.S. EPA Region IV, 345 Courtland St., NE., Atlanta, GA 30365
Regional Administrator, U.S. EPA Region V, 230 S. Dearborn St., Chicago, IL 60604
Regional Administrator, U.S. EPA Region VI, 1201 Elm Street, Dallas, TX 75270
Regional Administrator, U.S. EPA Region VII, 324 East 11th Street, Kansas City, MO 64106

Regional Administrator, U.S. EPA Region VIII, 1860 Lincoln Street, Denver, CO 80295
Regional Administrator, U.S. EPA Region IX, 215 Freemont Street, San Francisco, CA 94105
Regional Administrator, U.S. EPA Region X, 1200 Sixth Avenue, Seattle, WA 98101

Item 20. Facility Owner or Operator: Certification of Receipt of Hazardous Materials Covered by This Manifest Except as Noted in Item 19

Print or type the name of the person accepting the waste on behalf of the owner or operator of the facility. That person must acknowledge acceptance of the waste described on the Manifest by signing and entering the date of receipt.

Items A-K are not required by Federal regulations for intra- or interstate transportation. However, States may require generators and owners or operators of treatment, storage, or disposal facilities to complete some or all of items A-K as part of State manifest reporting requirements. Generators and owners and operators of treatment, storage, or disposal facilities are advised to contact State officials for guidance on completing the shaded areas of the Manifest.

20-142 O—88——16

(b) Notification shall be sent to the Office of International Activities (A-106), EPA, 401 M Street, SW., Washington, DC 20460 with "Attention: Notification to Export" prominently displayed on the front of the envelope.

(c) Except for changes to the telephone number in paragraph (a)(1) of this section, changes to paragraph (a)(2)(v) of this section and decreases in the quantity indicated pursuant to paragraph (a)(2)(iii) of this section when the conditions specified on the original notification change (including any exceedance of the estimate of the quantity of hazardous waste specified in the original notification), the primary exporter must provide EPA with a written renotification of the change. The shipment cannot take place until consent of the receiving country to the changes (except for changes to paragraph (a)(2)(viii) of this section and in the ports of entry to and departure from transit countries pursuant to paragraph (a)(2)(iv) of this section) has been obtained and the primary exporter receives an EPA Acknowledgment of Consent reflecting the receiving country's consent to the changes.

(d) Upon request by EPA, a primary exporter shall furnish to EPA any additional information which a receiving country requests in order to respond to a notification.

(e) In conjunction with the Department of State, EPA will provide a complete notification to the receiving country and any transit countries. A notification is complete when EPA receives a notification which EPA determines satisfies the requirements of paragraph (a) of this section. Where a claim of confidentiality is asserted with respect to any notification information required by paragraph (a) of this section, EPA may find the notification not complete until any such claim is resolved in accordance with 40 CFR 260.2.

(f) Where the receiving country consents to the receipt of the hazardous waste, EPA will forward an EPA Acknowledgment of Consent to the primary exporter for purposes of § 262.54(h). Where the receiving country objects to receipt of the hazardous waste or withdraws a prior consent, EPA will notify the primary exporter in writing. EPA will also notify the primary exporter of any responses from transit countries.

(Approved by the Office of Management and Budget under control number 2050-0035)

§ 262.54 Special manifest requirements.

A primary exporter must comply with the manifest requirements of 40 CFR 262.20 through 262.23 except that:

(a) In lieu of the name, site address and EPA ID number of the designated permitted facility, the primary exporter must enter the name and site address of the consignee;

(b) In lieu of the name, site address and EPA ID number of a permitted alternate facility, the primary exporter may enter the name and site address of any alternate consignee.

(c) In Special Handling Instructions and Additional Information, the primary exporter must identify the point of departure from the United States;

(d) The following statement must be added to the end of the first sentence of the certification set forth in Item 16 of the Uniform Hazardous Waste Manifest Form: "and conforms to the terms of the attached EPA Acknowledgment of Consent";

(e) In lieu of the requirements of § 262.21, the primary exporter must obtain the manifest form from the primary exporter's State if that State supplies the manifest form and requires its use. If the primary exporter's State does not supply the manifest form, the primary exporter may obtain a manifest form from any source.

(f) The primary exporter must require the consignee to confirm in writing the delivery of the hazardous waste to that facility and to describe any significant discrepancies (as defined in 40 CFR 264.72(a)) between the manifest and the shipment. A copy of the manifest signed by such facility may be used to confirm delivery of the hazardous waste.

(g) In lieu of the requirements of § 262.20(d), where a shipment cannot be delivered for any reason to the designated or alternate consignee, the primary exporter must:

(1) Renotify EPA of a change in the conditions of the original notification to allow shipment to a new consignee in accordance with § 262.53(c) and obtain an EPA Acknowledgment of Consent prior to delivery; or

(2) Instruct the transporter to return the waste to the primary exporter in the United States or designate another facility within the United States; and

(3) Instruct the transporter to revise the manifest in accordance with the primary exporter's instructions.

(h) The primary exporter must attach a copy of the EPA Acknowledgment of Consent to the shipment to the manifest which must accompany the hazardous waste shipment. For exports by rail or water (bulk shipment), the primary exporter must provide the transporter with an EPA Acknowledgment of Consent which must accompany the hazardous waste but which need not be attached to the manifest except that for exports by water (bulk shipment) the primary exporter must attach the copy of the EPA Acknowledgment of Consent to the shipping paper.

(i) The primary exporter shall provide the transporter with an additional copy of the manifest for delivery to the U.S. Customs official at the point the hazardous waste leaves the United States in accordance with § 263.20(g)(4).

(Approved by the Office of Management and Budget under control number 2050-0035)

§ 262.55 Exception reports.

In lieu of the requirements of § 262.42, a primary exporter must file an exception report with the Administrator if:

(a) He has not received a copy of the manifest signed by the transporter stating the date and place of departure from the United States within forty-five (45) days from the date it was accepted by the initial transporter;

(b) Within ninety (90) days from the date the waste was accepted by the initial transporter, the primary exporter has not received written confirmation from the consignee that the hazardous waste was received;

(c) The waste is returned to the United States.

(Approved by the Office of Management and Budget and assigned under control number 2050-0035)

§ 262.56 Annual reports.

(a) Primary exporters of hazardous waste shall file with the Administrator no later than March 1 of each year, a report summarizing the types, quantities, frequency, and ultimate destination of all hazardous waste exported during the previous calendar year. Such reports shall include the following:

(1) The EPA identification number, name, and mailing and site address of the exporter;

(2) The calendar year covered by the report;

(3) The name and site address of each consignee;

(4) By consignee, for each hazardous waste exported, a description of the hazardous waste, the EPA hazardous waste number (from 40 CFR Part 261, Subpart C or D), DOT hazard class, the name and US EPA ID number (where applicable) for each transporter used, the total amount of waste shipped and number of shipments pursuant to each notification;

(5) Except for hazardous waste produced by exporters of greater than 100 kg but less than 1000 kg in a calendar month, unless provided pursuant to § 262.41, in even numbered years:

(i) A description of the efforts undertaken during the year to reduce the volume and toxicity of waste generated; and

(ii) A description of the changes in volume and toxicity of waste actually achieved during the year in comparison to previous years to the extent such information is available for years prior to 1984.

(6) A certification signed by the primary exporter which states:

I certify under penalty of law that I have personally examined and am familiar with the information submitted in this and all attached documents, and that based on my inquiry of those individuals immediately rsponsible for obtaining the information, I believe that the submitted information is true, accurate, and complete. I am aware that there are significant penalties for sub-

mitting false information including the possibility of fine and imprisonment.

(b) Reports shall be sent to the following address: Office of International Activities (A-106), Environmental Protection Agency, 401 M Street SW., Washington, DC 20460.

(Approved by the Office of Management and Budget under control number 2050-0035)

§ 262.57 Recordkeeping.

(a) For all exports a primary exporter must:

(1) Keep a copy of each notification of intent to export for a period of at least three years from the date the hazardous waste was accepted by the initial transporter;

(2) Keep a copy of each EPA Acknowledgment of Consent for a period of at least three years from the date the hazardous waste was accepted by the initial transporter;

(3) Keep a copy of each confirmation of delivery of the hazardous waste from the consignee for at least three years from the date the hazardous waste was accepted by the initial transporter; and

(4) Keep a copy of each annual report for a period of at least three years from the due date of the report.

(b) The periods of retention referred to in this section are extended automatically during the course of any unresolved enforcement action regarding the regulated activity or as requested by the Administrator.

(Approved by the Office of Management and Budget under control number 2050-0035)

§ 262.58 International agreements. [(Reserved)]

Subpart F—Imports of Hazardous Waste

§ 262.60 Imports of hazardous waste.

(a) Any person who imports hazardous waste from a foreign country into the United States must comply with the requirements of this part and the special requirements of this subpart.

(b) When importing hazardous waste, a person must meet all the requirements of § 262.20(a) for the manifest except that:

(1) In place of the generator's name, address and EPA identification number, the name and address of the foreign generator and the importer's name, address and EPA identification number must be used.

(2) In place of the generator's signature on the certification statement, the U.S. importer or his agent must sign and date the certification and obtain the signature of the initial transporter.

(c) A person who imports hazardous waste must obtain the manifest form from the consignment State if the State supplies the manifest and requires its use. If the consignment State does not supply the manifest form, then the manifest form may be obtained from any source.

[51 FR 28685, Aug. 8, 1986]

Subpart G—Farmers

§ 262.70 Farmers.

A farmer disposing of waste pesticides from his own use which are hazardous wastes is not required to comply with the standards in this part or other standards in 40 CFR Part 270, 264 or 265 for those wastes provided he triple rinses each emptied pesticide container in accordance with § 261.7(b)(3) and disposes of the pesticide residues on his own farm in a manner consistent with the disposal instructions on the pesticide label.

[51 FR 28685, Aug. 8, 1986]

Appendix—Uniform Hazardous Waste Manifest and Instructions (EPA Forms 8700-22 and 8700-22A and Their Instructions)

U.S. EPA Form 8700-22

Read all instructions before completing this form.

This form has been designed for use on a 12-pitch (elite) typewriter; a firm point pen may also be used—press down hard.

Federal regulations require generators and transporters of hazardous waste and owners or operators of hazardous waste treatment, storage, and disposal facilities to use this form (8700-22) and, if necessary,

the continuation sheet (Form 8700-22A) for both inter and intrastate transportation.

Federal regulations also require generators and transporters of hazardous waste and owners or operators of hazardous waste treatment, storage and disposal facilities to complete the following information:

* * * * *

Please print or type (Form designed for use on elite (12 pitch) typewriter.) Form Approved OMB No. 2050-0039 Expires 9-30-88

UNIFORM HAZARDOUS WASTE MANIFEST
(Continuation Sheet)

21. Generator's US EPA ID No. | Manifest Document No. | 22. Page | Information in the shaded areas is not required by Federal law

23. Generator's Name | L. State Manifest Document Number | M. State Generator's ID

24. Transporter ___ Company Name | 25. US EPA ID Number | N. State Transporter's ID | O. Transporter's Phone

26. Transporter ___ Company Name | 27. US EPA ID Number | P. State Transporter's ID | Q. Transporter's Phone

GENERATOR

28. US DOT Description *(Including Proper Shipping Name, Hazard Class, and ID Number)*	29. Containers No.	Type	30. Total Quantity	31. Unit Wt./Vol.	R. Waste No.
a					
b					
c					
d					
e					
f					
g					
h					
i					

S. Additional Descriptions for Materials Listed Above | T. Handling Codes for Wastes Listed Above

32. Special Handling Instructions and Additional Information

TRANSPORTER

33. Transporter ___ Acknowledgement of Receipt of Materials | Date

Printed/Typed Name | Signature | Month Day Year

34. Transporter ___ Acknowledgement of Receipt of Materials | Date

Printed/Typed Name | Signature | Month Day Year

FACILITY

35. Discrepancy Indication Space

EPA Form 8700-22A (Rev. 9-86) Previous edition is obsolete.

INSTRUCTIONS—CONTINUATION SHEET, U.S. EPA FORM 8700-22A

Read all instructions before completing this form.

This form has been designed for use on a 12-pitch (elite) typewriter; a firm point pen may also be used—press down hard.

This form must be used as a continuation sheet to U.S. EPA Form 8700-22 if:

- More than two transporters are to be used to transport the waste;
- More space is required for the U.S. DOT description and related information in Item 11 of U.S. EPA Form 8700-22.

Federal regulations require generators and transporters of hazardous waste and owners or operators of hazardous waste treatment, storage, or disposal facilities to use the uniform hazardous waste manifest (EPA Form 8700-22) and, if necessary, this continuation sheet (EPA Form 8700-22A) for both inter- and intrastate transportation.

GENERATORS

Item 21. Generator's U.S. EPA ID Number—Manifest Document Number

Enter the generator's U.S. EPA twelve digit identification number and the unique five digit number assigned to this Manifest (e.g., 00001) as it appears in item 1 on the first page of the Manifest.

Item 22. Page ——

Enter the page number of this Continuation Sheet.

Item 23. Generator's Name

Enter the generator's name as it appears in item 3 on the first page of the Manifest.

Item 24. Transporter —— Company Name

If additional transporters are used to transport the waste described on this Manifest, enter the company name of each additional transporter in the order in which they will transport the waste. Enter after the word "Transporter" the order of the transporter. For example, Transporter 3 Company Name. Each Continuation Sheet will record the names of two additional transporters.

Item 25. U.S. EPA ID Number

Enter the U.S. EPA twelve digit identification number of the transporter described in item 24.

Item 26. Transporter —— Company Name

If additional transporters are used to transport the waste described on this Manifest, enter the company name of each additional transporter in the order in which they will transport the waste. Enter after the word "Transporter" the order of the transporter. For example, Transporter 4 Company Name. Each Continuation Sheet will record the names of two additional transporters.

Item 27. U.S. EPA ID Number

Enter the U.S. EPA twelve digit identification number of the transporter described in item 26.

Item 28. U.S. DOT Description Including Proper Shipping Name, Hazardous Class, and ID Number (UN/NA)

Refer to item 11.

Item 29. Containers (No. and Type)

Refer to item 12.

Item 30. Total Quantity

Refer to item 13.

Item 31. Unit (Wt./Vol.)

Refer to item 14.

Item 32. Special Handling Instructions

Generators may use this space to indicate special transportation, treatment, storage, or disposal information or Bill of Lading information. States are *not* authorized to require additional, new, or different information in this space.

* * * * *

TRANSPORTERS

Item 33. Transporter —— Acknowledgement of Receipt of Materials

Enter the same number of the Transporter as identified in item 24. Enter also the name of the person accepting the waste on behalf of the Transporter (Company Name) identified in item 24. That person must acknowledge acceptance of the waste described on the Manifest by signing and entering the date of receipt.

Item 34. Transporter —— Acknowledgement of Receipt of Materials

Enter the same number as identified in item 26. Enter also the name of the person accepting the waste on behalf of the Transporter (Company Name) identified in item 26. That person must acknowledge acceptance of the waste described on the Manifest by signing and entering the date of receipt.

* * * * *

OWNERS AND OPERATORS OF TREATMENT, STORAGE, OR DISPOSAL FACILITIES

Item 35. Discrepancy Indication Space

Refer to item 19.

Items L-R are not required by Federal regulations for intra- or interstate transportation. However, States may require generators and owners or operators of treatment, storage, or disposal facilities to complete some or all of items L-R as part of State manifest reporting requirements. Generators and owners and operators of treatment, storage, or disposal facilities are advised to contact State officials for guidance on completing the shaded areas of the manifest.

[49 FR 10501, Mar. 20, 1984, as amended at 51 FR 28685, Aug. 8, 1986; 51 FR 35192, Oct. 1, 1986]

PART 263—STANDARDS APPLICABLE TO TRANSPORTERS OF HAZARDOUS WASTE

Subpart A—General

Sec.
263.10 Scope.
263.11 EPA identification number.
263.12 Transfer facility requirements.

Subpart B—Compliance With the Manifest System and Recordkeeping

263.20 The manifest system.
263.21 Compliance with the manifest.
263.22 Recordkeeping.

Subpart C—Hazardous Waste Discharges

263.30 Immediate action.
263.31 Discharge clean up.

AUTHORITY: Secs. 2002(a), 3002, 3003, 3004 and 3005 of the Solid Waste Disposal Act as amended by the Resource Conservation and Recovery Act of 1976 and as amended by the Quiet Communities Act of 1978, (42 U.S.C. 6912a, 6922, 6923, 6924, 6925).

SOURCE: 45 FR 33151, May 19, 1980, unless otherwise noted.

Subpart A—General

§ 263.10 Scope.

(a) These regulations establish standards which apply to persons transporting hazardous waste within the United States if the transportation requires a manifest under 40 CFR Part 262.

NOTE: The regulations set forth in Parts 262 and 263 establish the responsibilities of generators and transporters of hazardous waste in the handling, transportation, and management of that waste. In these regulations, EPA has expressly adopted certain regulations of the Department of Transportation (DOT) governing the transportation of hazardous materials. These regulations concern, among other things, labeling, marking, placarding, using proper containers, and reporting discharges. EPA has expressly adopted these regulations in order to satisfy its statutory obligation to promulgate regulations which are necessary to protect human health and the environment in the transportation of hazardous waste. EPA's adoption of these DOT regulations ensures consistency with the requirements of DOT and thus avoids the establishment of duplicative or conflicting requirements with respect to these matters. These EPA regulations which apply to both interstate and intrastate transportation of hazardous waste are enforceable by EPA.

DOT has revised its hazardous materials transportation regulations in order to encompass the transportation of hazardous waste and to regulate intrastate, as well as interstate, transportation of hazardous waste. Transporters of hazardous waste are cautioned that DOT's regulations are fully applicable to their activities and enforceable by DOT. These DOT regulations are codified in Title 49, Code of Federal Regulations, Subchapter C.

EPA and DOT worked together to develop standards for transporters of hazardous waste in order to avoid conflicting requirements. Except for transporters of bulk shipments of hazardous waste by water, a transporter who meets all applicable requirements of 49 CFR Parts 171 through 179 and the requirements of 40 CFR 263.11 and 263.31 will be deemed in compliance with this part. Regardless of DOT's action, EPA retains its authority to enforce these regulations.

(b) These regulations do not apply to on-site transportation of hazardous waste by generators or by owners or operators of permitted hazardous waste management facilities.

(c) A transporter of hazardous waste must also comply with 40 CFR Part 262, Standards Applicable to Generators of Hazardous Waste, if he:

(1) Transports hazardous waste into the United States from abroad; or

(2) Mixes hazardous wastes of different DOT shipping descriptions by placing them into a single container.

[45 FR 33151, May 19, 1980, as amended at 45 FR 86968, Dec. 31, 1980]

§ 263.11 EPA identification number.

(a) A transporter must not transport hazardous wastes without having received an EPA identification number from the Administrator.

(b) A transporter who has not received an EPA identification number may obtain one by applying to the Administrator using EPA Form 8700-12. Upon receiving the request, the Administrator will assign an EPA identification number to the transporter.

§ 263.12 Transfer facility requirements.

A transporter who stores manifested shipments of hazardous waste in containers meeting the requirements of § 262.30 at a transfer facility for a period of ten days or less is not subject to regulation under Parts 270, 264, 265, and 268 of this chapter with respect to the storage of those wastes.

[45 FR 86968, Dec. 31, 1980, as amended at 48 FR 14294, Apr. 1, 1983; 51 FR 40637, Nov. 7, 1986]

Subpart B—Compliance With the Manifest System and Recordkeeping

§ 263.20 The manifest system.

(a) A transporter may not accept hazardous waste from a generator unless it is accompanied by a manifest signed in accordance with the provisions of 40 CFR 262.20. In the case of exports, a transporter may not accept such waste from a primary exporter or other person (1) if he knows the shipment does not conform to the EPA Acknowledgment of Consent; and (2) unless, in addition to a manifest signed in accordance with the provisions of 40 CFR 262.20, such waste is also accompanied by an EPA Acknowledgment of Consent which, except for shipment by rail, is attached to the manifest (or shipping paper for exports by water (bulk shipment)).

(b) Before transporting the hazardous waste, the transporter must sign and date the manifest acknowledging acceptance of the hazardous waste from the generator. The transporter must return a signed copy to the generator before leaving the generator's property.

(c) The transporter must ensure that the manifest accompanies the hazardous waste. In the case of exports, the transporter must ensure that a copy of the EPA Acknowledgment of Consent also accompanies the hazardous waste.

(d) A transporter who delivers a hazardous waste to another transporter or to the designated facility must:

(1) Obtain the date of delivery and the handwritten signature of that transporter or of the owner or operator of the designated facility on the manifest; and

(2) Retain one copy of the manifest in accordance with § 263.22; and

(3) Give the remaining copies of the manifest to the accepting transporter or designated facility.

(e) The requirements of paragraphs (c), (d) and (f) of this section do not apply to water (bulk shipment) transporters if:

(1) The hazardous waste is delivered by water (bulk shipment) to the designated facility; and

(2) A shipping paper containing all the information required on the manifest (excluding the EPA identification numbers, generator certification, and signatures) and, for exports, an EPA Acknowledgment of Consent accompanies the hazardous waste; and

(3) The delivering transporter obtains the date of delivery and handwritten signature of the owner or operator of the designated facility on either the manifest or the shipping paper; and

(4) The person delivering the hazardous waste to the initial water (bulk shipment) transporter obtains the date of delivery and signature of the water (bulk shipment) transporter on the manifest and forwards it to the designated facility; and

(5) A copy of the shipping paper or manifest is retained by each water (bulk shipment) transporter in accordance with § 263.22.

(f) For shipments involving rail transportation, the requirements of paragraphs (c), (d) and (e) do not apply and the following requirements do apply:

(1) When accepting hazardous waste from a non-rail transporter, the initial rail transporter must:

(i) Sign and date the manifest acknowledging acceptance of the hazardous waste;

(ii) Return a signed copy of the manifest to the non-rail transporter;

(iii) Forward at least three copies of the manifest to:

(A) The next non-rail transporter, if any; or,

(B) The designated facility, if the shipment is delivered to that facility by rail; or

(C) The last rail transporter designated to handle the waste in the United States;

(iv) Retain one copy of the manifest and rail shipping paper in accordance with § 263.22.

(2) Rail transporters must ensure that a shipping paper containing all the information required on the manifest (excluding the EPA identification numbers, generator certification, and signatures) and, for exports an EPA Acknowledgment of Consent accompanies the hazardous waste at all times.

NOTE: Intermediate rail transporters are not required to sign either the manifest or shipping paper.

(3) When delivering hazardous waste to the designated facility, a rail transporter must:

(i) Obtain the date of delivery and handwritten signature of the owner or operator of the designated facility on the manifest or the shipping paper (if the manifest has not been received by the facility); and

(ii) Retain a copy of the manifest or signed shipping paper in accordance with § 263.22.

(4) When delivering hazardous waste to a non-rail transporter a rail transporter must:

(i) Obtain the date of delivery and the handwritten signature of the next non-rail transporter on the manifest; and

(ii) Retain a copy of the manifest in accordance with § 263.22.

(5) Before accepting hazardous waste from a rail transporter, a non-rail transporter must sign and date the manifest and provide a copy to the rail transporter.

(g) Transporters who transport hazardous waste out of the United States must:

(1) Indicate on the manifest the date the hazardous waste left the United States; and

(2) Sign the manifest and retain one copy in accordance with § 263.22(c); and

(3) Return a signed copy of the manifest to the generator; and

(4) Give a copy of the manifest to a U.S. Customs official at the point of departure from the United States.

(h) A transporter transporting hazardous waste from a generator who generates greater than 100 kilograms but less than 1000 kilograms of hazardous waste in a calendar month need not comply with the requirements of this section or those of § 263.22 provided that:

(1) The waste is being transported pursuant to a reclamation agreement as provided for in § 262.20(e);

(2) The transporter records, on a log or shipping paper, the following information for each shipment:

(i) The name, address, and U.S. EPA Identification Number of the generator of the waste;

(ii) The quantity of waste accepted;

(iii) All DOT-required shipping information;

(iv) The date the waste is accepted; and

(3) The transporter carries this record when transporting waste to the reclamation facility; and

(4) The transporter retains these records for a period of at least three years after termination or expiration of the agreement.

[45 FR 33151, May 19, 1980, as amended at 45 FR 86973, Dec. 31, 1980; 51 FR 10176, Mar. 24, 1986; 51 FR 28685, Aug. 8, 1986]

§ 263.21 Compliance with the manifest.

(a) The transporter must deliver the entire quantity of hazardous waste which he has accepted from a generator or a transporter to:

(1) The designated facility listed on the manifest; or

(2) The alternate designated facility, if the hazardous waste cannot be delivered to the designated facility because an emergency prevents delivery; or

(3) The next designated transporter; or

(4) The place outside the United States designated by the generator.

(b) If the hazardous waste cannot be delivered in accordance with paragraph (a) of this section, the transporter must contact the generator for further directions and must revise the manifest according to the generator's instructions.

§ 263.22 Recordkeeping.

(a) A transporter of hazardous waste must keep a copy of the manifest signed by the generator, himself, and the next designated transporter or the owner or operator of the designated facility for a period of three years from the date the hazardous waste was accepted by the initial transporter.

(b) For shipments delivered to the designated facility by water (bulk shipment), each water (bulk shipment) transporter must retain a copy of the shipping paper containing all the information required in § 263.20(e)(2) for a period of three years from the date the hazardous waste was accepted by the initial transporter.

(c) For shipments of hazardous waste by rail within the United States:

(i) The initial rail transporter must keep a copy of the manifest and shipping paper with all the information required in § 263.20(f)(2) for a period of three years from the date the hazardous waste was accepted by the initial transporter; and

(ii) The final rail transporter must keep a copy of the signed manifest (or the shipping paper if signed by the designated facility in lieu of the manifest) for a period of three years from the date the hazardous waste was accepted by the initial transporter.

NOTE: Intermediate rail transporters are not required to keep records pursuant to these regulations.

(d) A transporter who transports hazardous waste out of the United States must keep a copy of the manifest indicating that the hazardous waste left the United States for a period of three years from the date the hazardous waste was accepted by the initial transporter.

(e) The periods of retention referred to in this Section are extended automatically during the course of any unresolved enforcement action regarding the regulated activity or as requested by the Administrator.

[45 FR 33151, May 19, 1980, as amended at 45 FR 86973, Dec. 31, 1980]

Subpart C—Hazardous Waste Discharges

§ 263.30 Immediate action.

(a) In the event of a discharge of hazardous waste during transportation, the transporter must take appropriate immediate action to protect human health and the environment (e.g., notify local authorities, dike the discharge area).

(b) If a discharge of hazardous waste occurs during transportation and an official (State or local government or a Federal Agency) acting within the scope of his official responsibilities determines that immediate removal of the waste is necessary to protect human health or the environment, that official may authorize the removal of the waste by transporters who do not have EPA identification numbers and without the preparation of a manifest.

(c) An air, rail, highway, or water transporter who has discharged hazardous waste must:

(1) Give notice, if required by 49 CFR 171.15, to the National Response Center (800-424-8802 or 202-426-2675); and

(2) Report in writing as required by 49 CFR 171.16 to the Director, Office of Hazardous Materials Regulations, Materials Transportation Bureau, Department of Transportation, Washington, DC 20590.

(d) A water (bulk shipment) transporter who has discharged hazardous waste must give the same notice as required by 33 CFR 153.203 for oil and hazardous substances.

§ 263.31 Discharge clean up.

A transporter must clean up any hazardous waste discharge that occurs during transportation or take such action as may be required or approved by Federal, State, or local officials so

that the hazardous waste discharge no longer presents a hazard to human health or the environment.

PART 264—STANDARDS FOR OWNERS AND OPERATORS OF HAZARDOUS WASTE TREATMENT, STORAGE, AND DISPOSAL FACILITIES

Subpart A—General

Sec.
264.1 Purpose, scope and applicability.
264.2 [Reserved]
264.3 Relationship to interim status standards.
264.4 Imminent hazard action.

Subpart B—General Facility Standards

264.10 Applicability.
264.11 Identification number.
264.12 Required notices.
264.13 General waste analysis.
264.14 Security.
264.15 General inspection requirements.
264.16 Personnel training.
264.17 General requirements for ignitable, reactive, or incompatible wastes.
264.18 Location standards.

Subpart C—Preparedness and Prevention

264.30 Applicability.
264.31 Design and operation of facility.
264.32 Required equipment.
264.33 Testing and maintenance of equipment.
264.34 Access to communications or alarm system.
264.35 Required aisle space.
264.36 [Reserved]
264.37 Arrangements with local authorities.

Subpart D—Contingency Plan and Emergency Procedures

264.50 Applicability.
264.51 Purpose and implementation of contingency plan.
264.52 Content of contingency plan.
264.53 Copies of contingency plan.
264.54 Amendment of contingency plan.
264.55 Emergency coordinator.
264.56 Emergency procedures.

Subpart E—Manifest System, Recordkeeping, and Reporting

264.70 Applicability.
264.71 Use of manifest system.
264.72 Manifest discrepancies
264.73 Operating record.
264.74 Availability, retention, and disposition of records.
264.75 Biennial report.
264.76 Unmanifested waste report.
264.77 Additional reports.

Subpart F—Releases From Solid Waste Management Units

264.90 Applicability.
264.91 Required programs.
264.92 Ground-water protection standard.
264.93 Hazardous constituents.
264.94 Concentration limits.
264.95 Point of compliance.
264.96 Compliance period.
264.97 General ground-water monitoring requirements.
264.98 Detection monitoring program.
264.99 Compliance monitoring program.
264.100 Corrective action program.
264.101 Corrective action for solid waste management units.

Subpart G—Closure and Post-Closure

264.110 Applicability.
264.111 Closure performance standard.
264.112 Closure plan; amendment of plan.
264.113 Closure; time allowed for closure.
264.114 Disposal or decontamination of equipment, structures and soils.
264.115 Certification of closure.
264.116 Survey plat.
264.117 Post-closure care and use of property.
264.118 Post-closure plan; amendment of plan.
264.119 Post-closure notices.
264.120 Certification of completion of post-closure care.

Subpart H—Financial Requirements

264.140 Applicability.
264.141 Definitions of terms as used in this subpart.
264.142 Cost estimate for closure.
264.143 Financial assurance for closure.
264.144 Cost estimate for post-closure care.
264.145 Financial assurance for post-closure care.
264.146 Use of a mechanism for financial assurance of both closure and post-closure care.
264.147 Liability requirements.
264.148 Incapacity of owners or operators, guarantors, or financial institutions.
264.149 Use of State-required mechanisms.
264.150 State assumption of responsibility.
264.151 Wording of the instruments.

Subpart I—Use and Management of Containers

264.170 Applicability.

264.171 Condition of containers.
264.172 Compatibility of waste with containers.
264.173 Management of containers.
264.174 Inspections.
264.175 Containment.
264.176 Special requirements for ignitable or reactive waste.
264.177 Special requirements for incompatible wastes.
264.178 Closure.

Subpart J—Tank Systems

264.190 Applicability.
264.191 Assessment of existing tank system's integrity.
264.192 Design and installation of new tank systems or components.
264.193 Containment and detection of releases.
264.194 General operating requirements.
264.195 Inspections.
264.196 Response to leaks or spills and disposition of leaking or unfit-for-use tank systems.
264.197 Closure and post-closure care.
264.198 Special requirements for ignitable or reactive wastes.
264.199 Special requirements for incompatible wastes.

Subpart K—Surface Impoundments

264.220 Applicability.
264.221 Design and operating requirements.
264.222—264.225 [Reserved]
264.226 Monitoring and inspection.
264.227 Emergency repairs; contingency plans.
264.228 Closure and post-closure care.
264.229 Special requirements for ignitable or reactive waste.
264.230 Special requirements for incompatible wastes.
264.231 Special requirements for hazardous wastes FO20, FO21, FO22, FO23, FO26, and FO27.

Subpart L—Waste Piles

264.250 Applicability.
264.251 Design and operating requirements.
264.252—264.253 [Reserved]
264.254 Monitoring and inspection.
264.255 [Reserved]
264.256 Special requirements for ignitable or reactive waste.
264.257 Special requirements for incompatible wastes.
264.258 Closure and post-closure care.
264.259 Special requirements for hazardous wastes FO20, FO21, FO22, FO23, FO26, and FO27.

Subpart M—Land Treatment

264.270 Applicability.
264.271 Treatment program.
264.272 Treatment demonstration.
264.273 Design and operating requirements.
264.274—264.275 [Reserved]
264.276 Food-chain crops.
264.277 [Reserved]
264.278 Unsaturated zone monitoring.
264.279 Recordkeeping.
264.280 Closure and post-closure care.
264.281 Special requirements for ignitable or reactive waste.
264.282 Special requirements for incompatible wastes.
264.283 Special requirements for hazardous wastes FO20, FO21, FO22, FO23, FO26, and FO27.

Subpart N—Landfills

264.300 Applicability.
264.301 Design and operating requirements.
264.302 [Reserved]
264.303 Monitoring and inspection.
264.304—264.308 [Reserved]
264.309 Surveying and recordkeeping.
264.310 Closure and post-closure care.
264.311 [Reserved]
264.312 Special requirements for ignitable or reactive waste.
264.313 Special requirements for incompatible wastes.
264.314 Special requirements for bulk and containerized liquids.
264.315 Special requirements for containers.
264.316 Disposal of small containers of hazardous waste in overpacked drums (lab packs).
264.317 Special requirements for hazardous wastes FO20, FO21, FO22, FO23, FO26, and FO27.

Subpart O—Incinerators

264.340 Applicability.
264.341 Waste analysis.
264.342 Principal organic hazardous constituents (POHCs).
264.343 Performance standards.
264.344 Hazardous waste incinerator permits.
264.345 Operating requirements.
264.346 [Reserved]
264.347 Monitoring and inspections.
264.348—264.350 [Reserved]
264.351 Closure.

Subparts P–W [Reserved]

Subpart X—Miscellaneous Units

264.600 Applicability.

264.601 Environmental performance standards.
264.602 Monitoring, analysis, inspection, response, reporting, and corrective action.
264.603 Post-closure care.

APPENDIX I—RECORDKEEPING INSTRUCTIONS
APPENDICES II—III [RESERVED]
APPENDIX IV—COCHRAN'S APPROXIMATION TO THE BEHRENS-FISHER STUDENTS' T-TEST
APPENDIX V—EXAMPLES OF POTENTIALLY INCOMPATIBLE WASTE
APPENDIX VI—POLITICAL JURISDICTIONS IN WHICH COMPLIANCE WITH § 264.18(a) MUST BE DEMONSTRATED
APPENDICES VII—VIII [RESERVED]
APPENDIX IX—GROUND-WATER MONITORING LIST

AUTHORITY: 42 U.S.C. 6905, 6912(a), 6924, and 6925.

SOURCE: 45 FR 33221, May 19, 1980, unless otherwise noted.

Subpart A—General

§ 264.1 Purpose, scope and applicability.

(a) The purpose of this part is to establish minimum national standards which define the acceptable management of hazardous waste.

(b) The standards in this part apply to owners and operators of all facilities which treat, store, or dispose of hazardous waste, except as specifically provided otherwise in this part or Part 261 of this chapter.

(c) The requirements of this part apply to a person disposing of hazardous waste by means of ocean disposal subject to a permit issued under the Marine Protection, Research, and Sanctuaries Act only to the extent they are included in a RCRA permit by rule granted to such a person under Part 270 of this chapter.

[*Comment:* These Part 264 regulations do apply to the treatment or storage of hazardous waste before it is loaded onto an ocean vessel for incineration or disposal at sea.]

(d) The requirements of this part apply to a person disposing of hazardous waste by means of underground injection subject to a permit issued under an Underground Injection Control (UIC) program approved or promulgated under the Safe Drinking Water Act only to the extent they are required by § 144.14 of this chapter.

[*Comment:* These Part 264 regulations do apply to the above-ground treatment or storage of hazardous waste before it is injected underground.]

(e) The requirements of this part apply to the owner or operator of a POTW which treats, stores, or disposes of hazardous waste only to the extent they are included in a RCRA permit by rule granted to such a person under Part 270 of this chapter.

(f) The requirements of this part do not apply to a person who treats, stores, or disposes of hazardous waste in a State with a RCRA hazardous waste program authorized under Subpart A of Part 271 of this chapter, or in a State authorized under Subpart B of Part 271 of this chapter for the component or components of Phase II interim authorization which correspond to the person's treatment, storage or disposal processes; except that this part will apply:

(1) As stated in paragraph (d) of this section, if the authorized State RCRA program does not cover disposal of hazardous waste by means of underground injection; and

(2) To a person who treats, stores or disposes of hazardous waste in a State authorized under Subpart A of Part 271 of this chapter, at a facility which was not covered by standards under this part when the State obtained authorization, and for which EPA promulgates standards under this part after the State is authorized. This paragraph will only apply until the State is authorized to permit such facilities under Subpart A of Part 271 of this chapter.

(3) To a person who treats, stores, or disposes of hazardous waste in a State which is authorized under Subpart A or B of Part 271 of this chapter if the State has not been authorized to carry out the requirements and prohibitions applicable to the treatment, storage, or disposal of hazardous waste at his facility which are imposed pursuant to the Hazardous and Solid Waste Amendments of 1984. The requirements and prohibitions that are applicable until a State receives authorization to carry them out include all Federal program requirements identified in § 271.1(j).

(g) The requirements of this part do not apply to:

(1) The owner or operator of a facility permitted, licensed, or registered by a State to manage municipal or industrial solid waste, if the only hazardous waste the facility treats, stores, or disposes of is excluded from regulation under this part by § 261.5 of this chapter;

(2) The owner or operator of a facility managing recyclable materials described in § 261.6(a) (2) and (3) of this chapter (except to the extent that requirements of this part are referred to in Subparts C, D, F, or G of Part 266 of this chapter).

(3) A generator accumulating waste on-site in compliance with § 262.34 of this chapter;

(4) A farmer disposing of waste pesticides from his own use in compliance with § 262.51 of this chapter; or

(5) The owner or operator of a totally enclosed treatment facility, as defined in § 260.10.

(6) The owner or operator of an elementary neutralization unit or a wastewater treatment unit as defined in § 260.10 of this chapter.

(7) [Reserved]

(8)(i) Except as provided in paragraph (g)(8)(ii) of this section, a person engaged in treatment or containment activities during immediate response to any of the following situations:

(A) A discharge of a hazardous waste;

(B) An imminent and substantial threat of a discharge of hazardous waste;

(C) A discharge of a material which, when discharged, becomes a hazardous waste.

(ii) An owner or operator of a facility otherwise regulated by this part must comply with all applicable requirements of Subparts C and D.

(iii) Any person who is covered by paragraph (g)(8)(i) of this section and who continues or initiates hazardous waste treatment or containment activities after the immediate response is over is subject to all applicable requirements of this part and Parts 122 through 124 of this chapter for those activities.

(9) A transporter storing manifested shipments of hazardous waste in containers meeting the requirements of 40 CFR 262.30 at a transfer facility for a period of ten days or less.

(10) The addition of absorbent material to waste in a container (as defined in § 260.10 of this chapter) or the addition of waste to absorbent material in a container, provided that these actions occur at the time waste is first placed in the container; and §§ 264.17(b), 264.171, and 264.172 are complied with.

(h) The requirements of this part apply to owners or operators of all facilities which treat, store, or dispose of hazardous wastes referred to in Part 268.

[45 FR 33221, May 19, 1980, as amended at 45 FR 76075, Nov. 17, 1980; 45 FR 86968, Dec. 31, 1980; 46 FR 27480, May 20, 1981; 47 FR 8306, Feb. 25, 1982; 47 FR 32384, July 26, 1982; 48 FR 2511, Jan. 19, 1983; 48 FR 14294, Apr. 1, 1983; 50 FR 665, Jan. 4, 1985; 50 FR 28746, July 15, 1985; 52 FR 21016, June 4, 1987]

§ 264.2 [Reserved]

§ 264.3 Relationship to interim status standards.

A facility owner or operator who has fully complied with the requirements for interim status—as defined in section 3005(e) of RCRA and regulations under § 270.70 of this chapter—must comply with the regulations specified in Part 265 of this chapter in lieu of the regulations in this part, until final administrative disposition of his permit application is made.

[*Comment:* As stated in section 3005(a) of RCRA, after the effective date of regulations under that section, i.e., Parts 270 and 124 of this chapter, the treatment, storage, or disposal of hazardous waste is prohibited except in accordance with a permit. Section 3005(e) of RCRA provides for the continued operation of an existing facility which meets certain conditions until final administrative disposition of the owner's or operator's permit application is made.]

[45 FR 33221, May 19, 1980, as amended at 48 FR 14294, Apr. 1, 1983]

§ 264.4 Imminent hazard action.

Notwithstanding any other provisions of these regulations, enforce-

ment actions may be brought purusant to section 7003 of RCRA.

Subpart B—General Facility Standards

§ 264.10 Applicability.

(a) The regulations in this subpart apply to owners and operators of all hazardous waste facilities, except as provided in § 264.1 and in paragraph (b) of this section.

(b) Section 264.18(b) applies only to facilities subject to regulation under Subparts I through O and Subpart X of this part.

[46 FR 2848, Jan. 12, 1981, as amended at 52 FR 46963, Dec. 10, 1987]

§ 264.11 Identification number.

Every facility owner or operator must apply to EPA for an EPA identification number in accordance with the EPA notification procedures (45 FR 12746).

(Approved by the Office of Management and Budget under control number 2050-0028)

[45 FR 33221, May 19, 1980, as amended at 50 FR 4514, Jan. 31, 1985]

§ 264.12 Required notices.

(a) The owner or operator of a facility that has arranged to receive hazardous waste from a foreign source must notify the Regional Administrator in writing at least four weeks in advance of the date the waste is expected to arrive at the facility. Notice of subsequent shipments of the same waste from the same foreign source is not required.

(b) The owner or operator of a facility that receives hazardous waste from an off-site source (except where the owner or operator is also the generator) must inform the generator in writing that he has the appropriate permit(s) for, and will accept, the waste the generator is shipping. The owner or operator must keep a copy of this written notice as part of the operating record.

(c) Before transferring ownership or operation of a facility during its operating life, or of a disposal facility during the post-closure care period, the owner or operator must notify the new owner or operator in writing of the requirements of this part and Part 270 of this chapter.

[*Comment:* An owner's or operator's failure to notify the new owner or operator of the requirements of this part in no way relieves the new owner or operator of his obligation to comply with all applicable requirements.]

(Approved by the Office of Management and Budget under control number 2050-0012)

[45 FR 33221, May 19, 1980, as amended at 48 FR 14294, Apr. 1, 1983; 50 FR 4514, Jan. 31, 1985]

§ 264.13 General waste analysis.

(a)(1) Before an owner or operator treats, stores, or disposes of any hazardous waste, he must obtain a detailed chemical and physical analysis of a representative sample of the waste. At a minimum, this analysis must contain all the information which must be known to treat, store, or dispose of the waste in accordance with the requirements of this part and Part 268 of this chapter or with the conditions of a permit issued under Part 270 and Part 124 of this chapter.

(2) The analysis may include data developed under Part 261 of this chapter, and existing published or documented data on the hazardous waste or on hazardous waste generated from similar processes.

[*Comment:* For example, the facility's records of analyses performed on the waste before the effective date of these regulations, or studies conducted on hazardous waste generated from processes similar to that which generated the waste to be managed at the facility, may be included in the data base required to comply with paragraph (a)(1) of this section. The owner or operator of an off-site facility may arrange for the generator of the hazardous waste to supply part or all of the information required by paragraph (a)(1) of this section. If the generator does not supply the information, and the owner or operator chooses to accept a hazardous waste, the owner or operator is responsible for obtaining the information required to comply with this section.]

(3) The analysis must be repeated as necessary to ensure that it is accurate and up to date. At a minimum, the analysis must be repeated:

(i) When the owner or operator is notified, or has reason to believe, that the process or operation generating the hazardous waste has changed; and

(ii) For off-site facilities, when the results of the inspection required in paragraph (a)(4) of this section indicate that the hazardous waste received at the facility does not match the waste designated on the accompanying manifest or shipping paper.

(4) The owner or operator of an off-site facility must inspect and, if necessary, analyze each hazardous waste movement received at the facility to determine whether it matches the identity of the waste specified on the accompanying manifest or shipping paper.

(b) The owner or operator must develop and follow a written waste analysis plan which describes the procedures which he will carry out to comply with paragraph (a) of this section. He must keep this plan at the facility. At a minimum, the plan must specify:

(1) The parameters for which each hazardous waste will be analyzed and the rationale for the selection of these parameters (i.e., how analysis for these parameters will provide sufficient information on the waste's properties to comply with paragraph (a) of this section);

(2) The test methods which will be used to test for these parameters;

(3) The sampling method which will be used to obtain a representative sample of the waste to be analyzed. A representative sample may be obtained using either:

(i) One of the sampling methods described in Appendix I of Part 261 of this chapter; or

(ii) An equivalent sampling method.

[*Comment:* See § 260.21 of this chapter for related discussion.]

(4) The frequency with which the initial analysis of the waste will be reviewed or repeated to ensure that the analysis is accurate and up to date; and

(5) For off-site facilities, the waste analyses that hazardous waste generators have agreed to supply.

(6) Where applicable, the methods which will be used to meet the additional waste analysis requirements for specific waste management methods as specified in §§ 264.17, 264.314, 264.341 and 268.7 of this chapter.

(7) For surface impoundments exempted from land disposal restrictions under § 268.4(a), the procedures and schedules for:

(i) The sampling of impoundment contents;

(ii) The analysis of test data; and,

(iii) The annual removal of residues which are not delisted under § 260.22 of this chapter and do not exhibit a characteristic of hazardous waste, and which do not meet the treatment standards of Part 268 Subpart D of this chapter or, where no treatment standards have been established, the annual removal of residues which do not meet the applicable prohibition levels in Part 268 Subpart C or RCRA section 3004(d).

(c) For off-site facilities, the waste analysis plan required in paragraph (b) of this section must also specify the procedures which will be used to in-spect and, if necessary, analyze each movement of hazardous waste received at the facility to ensure that it matches the identity of the waste designated on the accompanying manifest or shipping paper. At a minimum, the plan must describe:

(1) The procedures which will be used to determine the identity of each movement of waste managed at the facility; and

(2) The sampling method which will be used to obtain a representative sample of the waste to be identified, if the identification method includes sampling.

[*Comment:* Part 270 of this chapter requires that the waste analysis plan be submitted with Part B of the permit application.]

(Approved by the Office of Management and Budget under control number 2050-0012)

[45 FR 33221, May 19, 1980, as amended at 46 FR 2848, Jan. 12, 1981; 50 FR 4514, Jan. 31, 1985; 51 FR 40637, Nov. 7, 1986; 52 FR 21016, June 4, 1987; 52 FR 25787, July 8, 1987]

§ 264.14 Security.

(a) The owner or operator must prevent the unknowing entry, and minimize the possibility for the unauthorized entry, of persons or livestock onto

the active portion of his facility, *unless* he can demonstrate to the Regional Administrator that:

(1) Physical contact with the waste, structures, or equipment within the active portion of the facility will not injure unknowing or unauthorized persons or livestock which may enter the active portion of a facility; and

(2) Disturbance of the waste or equipment, by the unknowing or unauthorized entry of persons or livestock onto the active portion of a facility, will not cause a violation of the requirements of this part.

[*Comment:* Part 270 of this chapter requires that an owner or operator who wishes to make the demonstration referred to above must do so with Part B of the permit application.]

(b) Unless the owner or operator has made a successful demonstration under paragraphs (a)(1) and (2) of this section, a facility must have:

(1) A 24-hour surveillance system (e.g., television monitoring or surveillance by guards or facility personnel) which continuously monitors and controls entry onto the active portion of the facility; or

(2)(i) An artificial or natural barrier (e.g., a fence in good repair or a fence combined with a cliff), which completely surrounds the active portion of the facility; and

(ii) A means to control entry, at all times, through the gates or other entrances to the active portion of the facility (e.g., an attendant, television monitors, locked entrance, or controlled roadway access to the facility).

[*Comment:* The requirements of paragraph (b) of this section are satisfied if the facility or plant within which the active portion is located itself has a surveillance system, or a barrier and a means to control entry, which complies with the requirements of paragraph (b)(1) or (2) of this section.]

(c) Unless the owner or operator has made a successful demonstration under paragraphs (a)(1) and (2) of this section, a sign with the legend, "Danger—Unauthorized Personnel Keep Out", must be posted at each entrance to the active portion of a facility, and at other locations, in sufficient numbers to be seen from any approach to this active portion. The legend must be written in English and in any other language predominant in the area surrounding the facility (e.g., facilities in counties bordering the Canadian province of Quebec must post signs in French; facilities in counties bordering Mexico must post signs in Spanish), and must be legible from a distance of at least 25 feet. Existing signs with a legend other than "Danger—Unauthorized Personnel Keep Out" may be used if the legend on the sign indicates that only authorized personnel are allowed to enter the active portion, and that entry onto the active portion can be dangerous.

[*Comment:* See § 264.117(b) for discussion of security requirements at disposal facilities during the post-closure care period.]

(Approved by the Office of Management and Budget under control number 2050-0012)

[45 FR 33221, May 19, 1980, as amended at 46 FR 2848, Jan. 12, 1981; 48 FR 14294, Apr. 1, 1983; 50 FR 4514, Jan. 31, 1985]

§ 264.15 General inspection requirements.

(a) The owner or operator must inspect his facility for malfunctions and deterioration, operator errors, and discharges which may be causing—or may lead to—(1) release of hazardous waste constituents to the environment or (2) a threat to human health. The owner or operator must conduct these inspections often enough to identify problems in time to correct them before they harm human health or the environment.

(b)(1) The owner or operator must develop and follow a written schedule for inspecting monitoring equipment, safety and emergency equipment, security devices, and operating and structural equipment (such as dikes and sump pumps) that are important to preventing, detecting, or responding to environmental or human health hazards.

(2) He must keep this schedule at the facility.

(3) The schedule must identify the types of problems (e.g., malfunctions or deterioration) which are to be looked for during the inspection (e.g., inoperative sump pump, leaking fitting, eroding dike, etc.).

(4) The frequency of inspection may vary for the items on the schedule.

However, it should be based on the rate of possible deterioration of the equipment and the probability of an environmental or human health incident if the deterioration or malfunction of any operator error goes undetected between inspections. Areas subject to spills, such as loading and unloading areas, must be inspected daily when in use. At a minimum, the inspection schedule must include the terms and frequencies called for in §§ 264.174, 264.194, 264.226, 264.253, 264.254, 264.303, 264.347, and 264.602, where applicable.

[*Comment:* Part 270 of this chapter requires the inspection schedule to be submitted with Part B of the permit application. EPA will evaluate the schedule along with the rest of the application to ensure that it adequately protects human health and the environment. As part of this review, EPA may modify or amend the schedule as may be necessary.]

(c) The owner or operator must remedy any deterioration or malfunction of equipment or structures which the inspection reveals on a schedule which ensures that the problem does not lead to an environmental or human health hazard. Where a hazard is imminent or has already occurred, remedial action must be taken immediately.

(d) The owner or operator must record inspections in an inspection log or summary. He must keep these records for at least three years from the date of inspection. At a minimum, these records must include the date and time of the inspection, the name of the inspector, a notation of the observations made, and the date and nature of any repairs or other remedial actions.

(Approved by the Office of Management and Budget under control number 2050-0012)

[45 FR 33221, May 19, 1980, as amended at 47 FR 32350, July 26, 1982; 48 FR 14294, Apr. 1, 1983; 50 FR 4514, Jan. 31, 1985; 51 FR 25472, July 14, 1986; 52 FR 46963, Dec. 10, 1987]

§ 264.16 Personnel training.

(a)(1) Facility personnel must successfully complete a program of classroom instruction or on-the-job training that teaches them to perform their duties in a way that ensures the facility's compliance with the requirements of this part. The owner or operator must ensure that this program includes all the elements described in the document required under paragraph (d)(3) of this section.

[*Comment:* Part 270 of this chapter requires that owners and operators submit with Part B of the RCRA permit application, an outline of the training program used (or to be used) at the facility and a brief description of how the training program is designed to meet actual job tasks.]

(2) This program must be directed by a person trained in hazardous waste management procedures, and must include instruction which teaches facility personnel hazardous waste management procedures (including contingency plan implementation) relevant to the positions in which they are employed.

(3) At a minimum, the training program must be designed to ensure that facility personnel are able to respond effectively to emergencies by familiarizing them with emergency procedures, emergency equipment, and emergency systems, including, where applicable:

(i) Procedures for using, inspecting, repairing, and replacing facility emergency and monitoring equipment;

(ii) Key parameters for automatic waste feed cut-off systems;

(iii) Communications or alarm systems;

(iv) Response to fires or explosions;

(v) Response to ground-water contamination incidents; and

(vi) Shutdown of operations.

(b) Facility personnel must successfully complete the program required in paragraph (a) of this section within six months after the effective date of these regulations or six months after the date of their employment or assignment to a facility, or to a new position at a facility, whichever is later. Employees hired after the effective date of these regulations must not work in unsupervised positions until they have completed the training requirements of paragraph (a) of this section.

(c) Facility personnel must take part in an annual review of the initial

training required in paragraph (a) of this section.

(d) The owner or operator must maintain the following documents and records at the facility:

(1) The job title for each position at the facility related to hazardous waste management, and the name of the employee filling each job;

(2) A written job description for each position listed under paragraph (d)(1) of this section. This description may be consistent in its degree of specificity with descriptions for other similar positions in the same company location or bargaining unit, but must include the requisite skill, education, or other qualifications, and duties of employees assigned to each position;

(3) A written description of the type and amount of both introductory and continuing training that will be given to each person filling a position listed under paragraph (d)(1) of this section;

(4) Records that document that the training or job experience required under paragraphs (a), (b), and (c) of this section has been given to, and completed by, facility personnel.

(e) Training records on current personnel must be kept until closure of the facility; training records on former employees must be kept for at least three years from the date the employee last worked at the facility. Personnel training records may accompany personnel transferred within the same company.

(Approved by the Office of Management and Budget under control number 2050-0012)

[45 FR 33221, May 19, 1980, as amended at 46 FR 2848, Jan. 12, 1981; 48 FR 14294, Apr. 1, 1983; 50 FR 4514, Jan. 31, 1985]

§ 264.17 General requirements for ignitable, reactive, or incompatible wastes.

(a) The owner or operator must take precautions to prevent accidental ignition or reaction of ignitable or reactive waste. This waste must be separated and protected from sources of ignition or reaction including but not limited to: open flames, smoking, cutting and welding, hot surfaces, frictional heat, sparks (static, electrical, or mechanical), spontaneous ignition (e.g., from heat-producing chemical reactions), and r[illegible]nt heat. While ignitable or reactive waste is being handled, the owner or operator must confine smoking and open flame to specially designated locations. "No Smoking" signs must be conspicuously placed wherever there is a hazard from ignitable or reactive waste.

(b) Where specifically required by other sections of this part, the owner or operator of a facility that treats, stores or disposes ignitable or reactive waste, or mixes incompatible waste or incompatible wastes and other materials, must take precautions to prevent reactons which:

(1) Generate extreme heat or pressure, fire or explosions, or violent reactions;

(2) Produce uncontrolled toxic mists, fumes, dusts, or gases in sufficient quantities to threaten human health or the environment;

(3) Produce uncontrolled flammable fumes or gases in sufficient quantities to pose a risk of fire or explosions;

(4) Damage the structural integrity of the device or facility;

(5) Through other like means threaten human health or the environment.

(c) When required to comply with paragraph (a) or (b) of this section, the owner or operator must document that compliance. This documentation may be based on references to published scientific or engineering literature, data from trial tests (e.g., bench scale or pilot scale tests), waste analyses (as specified in § 264.13), or the results of the treatment of similar wastes by similar treatment processes and under similar operating conditions.

(Approved by the Office of Management and Budget under control number 2050-0012)

[46 FR 2848, Jan. 12, 1981, as amended at 50 FR 4514, Jan. 31, 1985]

§ 264.18 Location standards.

(a) *Seismic considerations.* (1) Portions of new facilities where treatment, storage, or disposal of hazardous waste will be conducted must not be located within 61 meters (200 feet) of a fault which has had displacement in Holocene time.

(2) As used in paragraph (a)(1) of this section:

(i) "Fault" means a fracture along which rocks on one side have been displaced with respect to those on the other side.

(ii) "Displacement" means the relative movement of any two sides of a fault measured in any direction.

(iii) "Holocene" means the most recent epoch of the Quarternary period, extending from the end of the Pleistocene to the present.

[*Comment:* Procedures for demonstrating compliance with this standard in Part B of the permit application are specified in § 270.14(b)(11). Facilities which are located in political jurisdictions other than those listed in Appendix VI of this part, are assumed to be in compliance with this requirement.]

(b) *Floodplains.* (1) A facility located in a 100-year floodplain must be designed, constructed, operated, and maintained to prevent washout or any hazardous waste by a 100-year flood, *unless* the owner or operator can demonstrate to the Regional Administrator's satisfaction that:

(i) Procedures are in effect which will cause the waste to be removed safely, before flood waters can reach the facility, to a location where the wastes will not be vulnerable to flood waters; or

(ii) For existing surface impoundments, waste piles, land treatment units, landfills, and miscellaneous units, no adverse effects on human health or the environment will result if washout occurs, considering:

(A) The volume and physical and chemical characteristics of the waste in the facility;

(B) The concentration of hazardous constituents that would potentially affect surface waters as a result of washout;

(C) The impact of such concentrations on the current or potential uses of and water quality standards established for the affected surface waters; and

(D) The impact of hazardous constituents on the sediments of affected surface waters or the soils of the 100-year floodplain that could result from washout.

[*Comment:* The location where wastes are moved must be a facility which is either permitted by EPA under Part 270 of this chapter, authorized to manage hazardous waste by a State with a hazardous waste management program authorized under Part 271 of this chapter, or in interim status under Parts 270 and 265 of this chapter.]

(2) As used in paragraph (b)(1) of this section:

(i) "100-year floodplain" means any land area which is subject to a one percent or greater chance of flooding in any given year from any source.

(ii) "Washout" means the movement of hazardous waste from the active portion of the facility as a result of flooding.

(iii) "100-year flood" means a flood that has a one percent chance of being equalled or exceeded in any given year.

[*Comment:* (1) Requirements pertaining to other Federal laws which affect the location and permitting of facilities are found in § 270.3 of this chapter. For details relative to these laws, see EPA's manu[illegible] SEA (special environmental area) requirements for hazardous waste facility permits. Through EPA is responsible for complying with these requirements, applicants are advised to consider them in planning the location of a facility to help prevent subsequent project delays.]

(c) *Salt dome formations, salt bed formations, underground mines and caves.* The placement of any noncontainerized or bulk liquid hazardous waste in any salt dome formation, salt bed formation, underground mine or cave is prohibited, except for the Department of Energy Waste Isolation Pilot Project in New Mexico.

(Approved by the Office of Management and Budget under control number 2050-0010 and 2050-0012)

[46 FR 2848, Jan. 12, 1981, as amended at 47 FR 32350, July 26, 1982; 48 FR 14294, Apr. 1, 1983; 48 FR 30115, June 30, 1983; 50 FR 4514, Jan. 31, 1985; 50 FR 28746, July 15, 1985; 52 FR 46963, Dec. 10, 1987]

Subpart C—Preparedness and Prevention

§ 264.30 Applicability.

The regulations in this subpart apply to owners and operators of all hazardous waste facilities, except as § 264.1 provides otherwise.

§ 264.31 Design and operation of facility.

Facilities must be designed, constructed, maintained, and operated to minimize the possibility of a fire, explosion, or any unplanned sudden or non-sudden release of hazardous waste or hazardous waste constituents to air, soil, or surface water which could threaten human health or the environment.

§ 264.32 Required equipment.

All facilities must be equipped with the following, *unless* it can be demonstrated to the Regional Administrator that none of the hazards posed by waste handled at the facility could require a particular kind of equipment specified below:

(a) An internal communications or alarm system capable of providing immediate emergency instruction (voice or signal) to facility personnel;

(b) A device, such as a telephone (immediately available at the scene of operations) or a hand-held two-way radio, capable of summoning emergency assistance from local police departments, fire departments, or State or local emergency response teams;

(c) Portable fire extinguishers, fire control equipment (including special extinguishing equipment, such as that using foam, inert gas, or dry chemicals), spill control equipment, and decontamination equipment; and

(d) Water at adequate volume and pressure to supply water hose streams, or foam producing equipment, or automatic sprinklers, or water spray systems.

[*Comment:* Part 270 of this chapter requires that an owner or operator who wishes to make the demonstration referred to above must do so with Part B of the permit application.]

[45 FR 33221, May 19, 1980, as amended at 48 FR 14294, Apr. 1, 1983]

§ 264.33 Testing and maintenance of equipment.

All facility communications or alarm systems, fire protection equipment, spill control equipment, and decontamination equipment, where required, must be tested and maintained as necessary to assure its proper operation in time of emergency.

§ 264.34 Access to communications or alarm system.

(a) Whenever hazardous waste is being poured, mixed, spread, or otherwise handled, all personnel involved in the operation must have immediate access to an internal alarm or emergency communication device, either directly or through visual or voice contact with another employee, *unless* the Regional Administrator has ruled that such a device is not required under § 264.32.

(b) If there is ever just one employee on the premises while the facility is operating, he must have immediate access to a device, such as a telephone (immediately available at the scene of operation) or a hand-held two-way radio, capable of summoning external emergency assistance, *unless* the Regional Administrator has ruled that such a device is not required under § 264.32.

§ 264.35 Required aisle space.

The owner or operator must maintain aisle space to allow the unobstructed movement of personnel, fire protection equipment, spill control equipment, and decontamination equipment to any area of facility operation in an emergency, *unless* it can be demonstrated to the Regional Administrator that aisle space is not needed for any of these purposes.

[*Comment:* Part 270 of this chapter requires that an owner or operator who wishes to make the demonstration referred to above must do so with Part B of the permit application.]

[45 FR 33221, May 19, 1980, as amended at 48 FR 14294, Apr. 1, 1983]

§ 264.36 [Reserved]

§ 264.37 Arrangements with local authorities.

(a) The owner or operator must attempt to make the following arrangements, as appropriate for the type of waste handled at his facility and the potential need for the services of these organizations:

(1) Arrangements to familiarize police, fire departments, and emergency response teams with the layout of the facility, properties of hazardous waste handled at the facility and associated hazards, places where facility personnel would normally be working, entrances to and roads inside the facility, and possible evacuation routes;

(2) Where more than one police and fire department might respond to an emergency, agreements designating primary emergency authority to a specific police and a specific fire department, and agreements with any others to provide support to the primary emergency authority;

(3) Agreements with State emergency response teams, emergency response contractors, and equipment suppliers; and

(4) Arrangements to familiarize local hospitals with the properties of hazardous waste handled at the facility and the types of injuries or illnesses which could result from fires, explosions, or releases at the facility.

(b) Where State or local authorities decline to enter into such arrangements, the owner or operator must document the refusal in the operating record.

Subpart D—Contingency Plan and Emergency Procedures

§ 264.50 Applicability.

The regulations in this subpart apply to owners and operators of all hazardous waste facilities, except as § 264.1 provides otherwise.

§ 264.51 Purpose and implementation of contingency plan.

(a) Each owner or operator must have a contingency plan for his facility. The contingency plan must be designed to minimize hazards to human health or the environment from fires, explosions, or any unplanned sudden or non-sudden release of hazardous waste or hazardous waste constituents to air, soil, or surface water.

(b) The provisions of the plan must be carried out immediately whenever there is a fire, explosion, or release of hazardous waste or hazardous waste constituents which could threaten human health or the environment.

(Approved by the Office of Management and Budget under control number 2050-0011)

[45 FR 33221, May 19, 1980, as amended at 50 FR 4514, Jan. 31, 1985]

§ 264.52 Content of contingency plan.

(a) The contingency plan must describe the actions facility personnel must take to comply with §§ 264.51 and 264.56 in response to fires, explosions, or any unplanned sudden or non-sudden release of hazardous waste or hazardous waste constituents to air, soil, or surface water at the facility.

(b) If the owner or operator has already prepared a Spill Prevention, Control, and Countermeasures (SPCC) Plan in accordance with Part 112 of this chapter, or Part 1510 of Chapter V, or some other emergency or contingency plan, he need only amend that plan to incorporate hazardous waste management provisions that are sufficient to comply with the requirements of this part.

(c) The plan must describe arrangements agreed to by local police departments, fire departments, hospitals, contractors, and State and local emergency response teams to coordinate emergency services, pursuant to § 264.37.

(d) The plan must list names, addresses, and phone numbers (office and home) of all persons qualified to act as emergency coordinator (see § 264.55), and this list must be kept up to date. Where more than one person is listed, one must be named as primary emergency coordinator and others must be listed in the order in which they will assume responsibility as alternates. *For new facilities,* this information must be supplied to the Regional Administrator at the time of certification, rather than at the time of permit application.

(e) The plan must include a list of all emergency equipment at the facility (such as fire extinguishing systems, spill control equipment, communications and alarm systems (internal and external), and decontamination equipment), where this equipment is required. This list must be kept up to date. In addition, the plan must include the location and a physical description of each item on the list, and a brief outline of its capabilities.

(f) The plan must include an evacuation plan for facility personnel where

there is a possibility that evacuation could be necessary. This plan must describe signal(s) to be used to begin evacuation, evacuation routes, and alternate evacuation routes (in cases where the primary routes could be blocked by releases of hazardous waste or fires).

(Approved by the Office of Management and Budget under control number 2050-0011)

[45 FR 33221, May 19, 1980, as amended at 46 FR 27480, May 20, 1981; 50 FR 4514, Jan. 31, 1985]

§ 264.53 Copies of contingency plan.

A copy of the contingency plan and all revisions to the plan must be:

(a) Maintained at the facility; and

(b) Submitted to all local police departments, fire departments, hospitals, and State and local emergency response teams that may be called upon to provide emergency services.

[*Comment:* The contingency plan must be submitted to the Regional Administrator with Part B of the permit application under Part 270, of this chapter and, after modification or approval, will become a condition of any permit issued.]

(Approved by the Office of Management and Budget under control number 2050-0011)

[45 FR 33221, May 19, 1980, as amended at 48 FR 30115, June 30, 1983; 50 FR 4514, Jan. 31, 1985]

§ 264.54 Amendment of contingency plan.

The contingency plan must be reviewed, and immediately amended, if necessary, whenever:

(a) The facility permit is revised;

(b) The plan fails in an emergency;

(c) The facility changes—in its design, construction, operation, maintenance, or other circumstances—in a way that materially increases the potential for fires, explosions, or releases of hazardous waste or hazardous waste constituents, or changes the response necessary in an emergency;

(d) The list of emergency coordinators changes; or

(e) The list of emergency equipment changes.

[*Comment:* A change in the lists of facility emergency coordinators or equipment in the contingency plan constitutes a minor modification to the facility permit to which the plan is a condition.]

(Approved by the Office of Management and Budget under control number 2050-0011)

[45 FR 33221, May 19, 1980, as amended at 50 FR 4514, Jan. 31, 1985]

§ 264.55 Emergency coordinator.

At all times, there must be at least one employee either on the facility premises or on call (i.e., available to respond to an emergency by reaching the facility within a short period of time) with the responsibility for coordinating all emergency response measures. This emergency coordinator must be thoroughly familiar with all aspects of the facility's contingency plan, all operations and activities at the facility, the location and characteristics of waste handled, the location of all records within the facility, and the facility layout. In addition, this person must have the authority to commit the resources needed to carry out the contingency plan.

[*Comment:* The emergency coordinator's responsibilities are more fully spelled out in § 264.56. Applicable responsibilities for the emergency coordinator vary, depending on factors such as type and variety of waste(s) handled by the facility, and type and complexity of the facility.]

§ 264.56 Emergency procedures.

(a) Whenever there is an imminent or actual emergency situation, the emergency coordinator (or his designee when the emergency coordinator is on call) must immediately:

(1) Activate internal facility alarms or communication systems, where applicable, to notify all facility personnel; and

(2) Notify appropriate State or local agencies with designated response roles if their help is needed.

(b) Whenever there is a release, fire, or explosion, the emergency coordinator must immediately identify the character, exact source, amount, and areal extent of any released materials. He may do this by observation or review of facility records or manifests, and, if necessary, by chemical analysis.

(c) Concurrently, the emergency coordinator must assess possible hazards to human health or the environment

that may result from the release, fire, or explosion. This assessment must consider both direct and indirect effects of the release, fire, or explosion (e.g., the effects of any toxic, irritating, or asphyxiating gases that are generated, or the effects of any hazardous surface water run-off from water or chemical agents used to control fire and heat-induced explosions).

(d) If the emergency coordinator determines that the facility has had a release, fire, or explosion which could threaten human health, or the environment, outside the facility, he must report his findings as follows:

(1) If his assessment indicates that evacuation of local areas may be advisable, he must immediately notify appropriate local authorities. He must be available to help appropriate officials decide whether local areas should be evacuated; and

(2) He must immediately notify either the government official designated as the on-scene coordinator for that geographical area, (in the applicable regional contingency plan under Part 1510 of this title) or the National Response Center (using their 24-hour toll free number 800/424-8802). The report must include:

(i) Name and telephone number of reporter;

(ii) Name and address of facility;

(iii) Time and type of incident (e.g., release, fire);

(iv) Name and quantity of material(s) involved, to the extent known;

(v) The extent of injuries, if any; and

(vi) The possible hazards to human health, or the environment, outside the facility.

(e) During an emergency, the emergency coordinator must take all reasonable measures necessary to ensure that fires, explosions, and releases do not occur, recur, or spread to other hazardous waste at the facility. These measures must include, where applicable, stopping processes and operations, collecting and containing release waste, and removing or isolating containers.

(f) If the facility stops operations in response to a fire, explosion, or release, the emergency coordinator must monitor for leaks, pressure buildup, gas generation, or ruptures in valves, pipes, or other equipment, wherever this is appropriate.

(g) Immediately after an emergency, the emergency coordinator must provide for treating, storing, or disposing of recovered waste, contaminated soil or surface water, or any other material that results from a release, fire, or explosion at the facility.

[*Comment:* Unless the owner or operator can demonstrate, in accordance with § 261.3(c) or (d) of this chapter, that the recovered material is not a hazardous waste, the owner or operator becomes a generator of hazardous waste and must manage it in accordance with all applicable requirements of Parts 262, 263, and 264 of this chapter.]

(h) The emergency coordinator must ensure that, in the affected area(s) of the facility:

(1) No waste that may be incompatible with the released material is treated, stored, or disposed of until cleanup procedures are completed; and

(2) All emergency equipment listed in the contingency plan is cleaned and fit for its intended use before operations are resumed.

(i) The owner or operator must notify the Regional Administrator, and appropriate State and local authorities, that the facility is in compliance with paragraph (h) of this section before operations are resumed in the affected area(s) of the facility.

(j) The owner or operator must note in the operating record the time, date, and details of any incident that requires implementing the contingency plan. Within 15 days after the incident, he must submit a written report on the incident to the Regional Administrator. The report must include:

(1) Name, address, and telephone number of the owner or operator;

(2) Name, address, and telephone number of the facility;

(3) Date, time, and type of incident (e.g., fire, explosion);

(4) Name and quantity of material(s) involved;

(5) The extent of injuries, if any;

(6) An assessment of actual or potential hazards to human health or the environment, where this is applicable; and

(7) Estimated quantity and disposition of recovered material that resulted from the incident.

(Approved by the Office of Management and Budget under control number 2050-0012)

[45 FR 33221, May 19, 1980, as amended at 50 FR 4514, Jan. 31, 1985]

Subpart E—Manifest System, Recordkeeping, and Reporting

§ 264.70 Applicability.

The regulations in this subpart apply to owners and operators of both on-site and off-site facilities, except as § 264.1 provides otherwise. Sections 264.71, 264.72, and 264.76 do not apply to owners and operators of on-site facilities that do not receive any hazardous waste from off-site sources. Section 264.73(b) only applies to permittees who treat, store, or dispose of hazardous wastes on-site where such wastes were generated.

[50 FR 28746, July 15, 1985]

§ 264.71 Use of manifest system.

(a) If a facility receives hazardous waste accompanied by a manifest, the owner or operator, or his agent, must:

(1) Sign and date each copy of the manifest to certify that the hazardous waste covered by the manifest was received,

(2) Note any significant discrepancies in the manifest (as defined in § 264.72(a)) on each copy of the manifest;

[*Comment:* The Agency does not intend that the owner or operator of a facility whose procedures under § 264.13(c) include waste analysis must perform that analysis before signing the manifest and giving it to the transporter. Section 264.72(b), however, requires reporting an unreconciled discrepancy discovered during later analysis.]

(3) Immediately give the transporter at least one copy of the signed manifest;

(4) Within 30 days after the delivery, send a copy of the manifest to the generator; and

(5) Retain at the facility a copy of each manifest for at least three years from the date of delivery.

(b) If a facility receives, from a rail or water (bulk shipment) transporter, hazardous waste which is accompanied by a shipping paper containing all the information required on the manifest (excluding the EPA identification numbers, generator's certification, and signatures), the owner or operator, or his agent, must:

(1) Sign and date each copy of the manifest or shipping paper (if the manifest has not been received) to certify that the hazardous waste covered by the manifest or shipping paper was received;

(2) Note any significant discrepancies (as defined in § 264.72(a)) in the manifest or shipping paper (if the manifest has not been received) on each copy of the manifest or shipping paper.

[*Comment:* The Agency does not intend that the owner or operator of a facility whose procedures under § 264.13(c) include waste analysis must perform that analysis before signing the shipping paper and giving it to the transporter. Section 264.72(b), however, requires reporting an unreconciled discrepancy discovered during later analysis.]

(3) Immediately give the rail or water (bulk shipment) transporter at least one copy of the manifest or shipping paper (if the manifest has not been received);

(4) Within 30 days after the delivery, send a copy of the signed and dated manifest to the generator; however, if the manifest has not been received within 30 days after delivery, the owner or operator, or his agent, must send a copy of the shipping paper signed and dated to the generator; and

[*Comment:* Section 262.23(c) of this chapter requires the generator to send three copies of the manifest to the facility when hazardous waste is sent by rail or water (bulk shipment).]

(5) Retain at the facility a copy of the manifest and shipping paper (if signed in lieu of the manifest at the time of delivery) for at least three years from the date of delivery.

(c) Whenever a shipment of hazardous waste is initiated from a facility, the owner or operator of that facility must comply with the requirements of Part 262 of this chapter.

[*Comment:* The provisions of § 262.34 are applicable to the on-site accumulation of hazardous wastes by generators. Therefore, the provisions of § 262.34 only apply to owners or operators who are shipping hazardous waste which they generated at that facility.]

[45 FR 33221, May 19, 1980, as amended at 45 FR 86970, 86974, Dec. 31, 1980]

§ 264.72 Manifest discrepancies.

(a) Manifest discrepancies are differences between the quantity or type of hazardous waste designated on the manifest or shipping paper, and the quantity or type of hazardous waste a facility actually receives. Significant discrepancies in quantity are:

(1) For bulk waste, variations greater than 10 percent in weight, and (2) for batch waste, any variation in piece count, such as a discrepancy of one drum in a truckload. Significant discrepancies in type are obvious differences which can be discovered by inspection or waste analysis, such as waste solvent substituted for waste acid, or toxic constituents not reported on the manifest or shipping paper.

(b) Upon discovering a significant discrepancy, the owner or operator must attempt to reconcile the discrepancy with the waste generator or transporter (e.g., with telephone conversations). If the discrepancy is not resolved within 15 days after receiving the waste, the owner or operator must immediately submit to the Regional Administrator a letter describing the discrepancy and attempts to reconcile it, and a copy of the manifest or shipping paper at issue.

(Approved by the Office of Management and Budget under control number 2050-0012)

[45 FR 33221, May 19, 1980, as amended at 50 FR 4514, Jan. 31, 1985]

§ 264.73 Operating record.

(a) The owner or operator must keep a written operating record at his facility.

(b) The following information must be recorded, as it becomes available, and maintained in the operating record until closure of the facility:

(1) A description and the quantity of each hazardous waste received, and the method(s) and date(s) of its treatment, storage, or disposal at the facility as required by Appendix I;

(2) The location of each hazardous waste within the facility and the quantity at each location. For disposal facilities, the location and quantity of each hazardous waste must be recorded on a map or diagram of each cell or disposal area. For all facilities, this information must include cross-references to specific manifest document numbers, if the waste was accompanied by a manifest;

[*Comment:* See § 264.119 for related requirements.]

(3) Records and results of waste analyses performed as specified in §§ 264.13, 264.17, 264.314, 264,341, 268.4(a), and 268.7 of this chapter.

(4) Summary reports and details of all incidents that require implementing the contingency plan as specified in § 264.56(j);

(5) Records and results of inspections as required by § 264.15(d) (except these data need be kept only three years);

(6) Monitoring, testing or analytical data, and corrective action where required by Subpart F and §§ 264.226, 264.253, 264.254, 264.276, 264.278, 264.280, 264.303, 264.309, 264.347, and 264.602;

(7) For off-site facilities, notices to generators as specified in § 264.12(b); and

(8) All closure cost estimates under § 264.142, and, for disposal facilities, all post-closure cost estimates under § 264.144.

(9) A certification by the permittee no less often than annually, that the permittee has a program in place to reduce the volume and toxicity of hazardous waste that he generates to the degree determined by the permittee to be economically practicable; and the proposed method of treatment, storage or disposal is that practicable method currently available to the permittee which minimizes the present and future threat to human health and the environment.

(10) Records of the quantities (and date of placement) for each shipment of hazardous waste placed in land disposal units under an extension to the effective date of any land disposal restriction granted pursuant to § 268.5 or a petition pursuant to § 268.6, and

the notice required by a generator under § 268.7(a)(3);

(11) For an off-site treatment facility, a copy of the notice required by a generator under § 268.7(a)(1);

(12) For an on-site treatment facility, the information contained in the notice required by a generator under § 268.7(a)(1), except for the manifest number;

(13) For an off-site land disposal facility, a copy of the notice and certification required by the owner or operator of a treatment facility under § 268.7(b) (1) and (2), or a copy of the notice and certification required by the generator under § 268.7(a)(2), whichever is applicable; and

(14) For an on-site land disposal facility, the information contained in the notice required under § 268.7(a)(2), except for the manifest number, or the information contained in the notice required by a treater under § 268.7(b)(1), except for the manifest number, whichever is applicable.

(Approved by the Office of Management and Budget under control numbers 2050-0012 and 2050-0013. The reporting and recordkeeping requirements contained in paragraph (b)(9) were approved by OMB under control number 2050-0037)

[45 FR 33221, May 19, 1980, as amended at 46 FR 2849, Jan. 12, 1981; 46 FR 7678, Jan. 23, 1981; 50 FR 4514, Jan. 31, 1985; 50 FR 18374, Apr. 30, 1985; 50 FR 28746, July 15, 1985; 51 FR 40637, Nov. 7, 1986; 52 FR 21016, June 4, 1987; 52 FR 46963, Dec. 10, 1987]

§ 264.74 Availability, retention, and disposition of records.

(a) All records, including plans, required under this part must be furnished upon request, and made available at all reasonable times for inspection, by any officer, employee, or representative of EPA who is duly designated by the Administrator.

(b) The retention period for all records required under this part is extended automatically during the course of any unresolved enforcement action regarding the facility or as requested by the Administrator.

(c) A copy of records of waste disposal locations and quantities under § 264.7[illegible](2) must be submitted to the R[illegible]nal Administrator and local land authority upon closure of the facility.

§ 264.75 Biennial report.

The owner or operator must prepare and submit a single copy of a biennial report to the Regional Administrator by March 1 of each even numbered year. The biennial report must be submitted on EPA form 8700-13B. The report must cover facility activities during the previous calendar year and must include:

(a) The EPA identification number, name, and address of the facility;

(b) The calendar year covered by the report;

(c) For off-site facilities, the EPA identification number of each hazardous waste generator from which the facility received a hazardous waste during the year; for imported shipments, the report must give the name and address of the foreign generator;

(d) A description and the quantity of each hazardous waste the facility received during the year. For off-site facilities, this information must be listed by EPA identification number of each generator;

(e) The method of treatment, storage, or disposal for each hazardous waste;

(f) [Reserved]

(g) The most recent closure cost estimate under § 264.142, and, for disposal facilities, the most recent post-closure cost estimate under § 264.144; and

(h) For generators who treat, store, or dispose of hazardous waste on-site, a description of the efforts undertaken during the year to reduce the volume and toxicity of waste generated.

(i) For generators who treat, store, or dispose of hazardous waste on-site, a description of the changes in volume and toxicity of waste actually achieved during the year in comparison to previous years to the extent such information is available for the years prior to 1984.

(j) The certification signed by the owner or operator of the facility or his authorized representative.

(Approved by the Office of Management and Budget under control number 2050-0024)

[45 FR 33221, May 19, 1980, as amended at 46 FR 2849, Jan. 12, 1981; 48 FR 3982, Jan. 28, 1983; 50 FR 4514, Jan. 31, 1985; 51 FR 28556, Aug. 8, 1986]

§ 264.76 Unmanifested waste report.

If a facility accepts for treatment, storage, or disposal any hazardous waste from an off-site source without an accompanying manifest, or without an accompanying shipping paper as described in § 263.20(e)(2) of this chapter, and if the waste is not excluded from the manifest requirement by § 261.5 of this chapter, then the owner or operator must prepare and submit a single copy of a report to the Regional Administrator within fifteen days after receiving the waste. The unmanifested waste report must be submitted on EPA form 8700-13B. Such report must be designated 'Unmanifested Waste Report' and include the following information:

(a) The EPA identification number, name, and address of the facility;

(b) The date the facility received the waste;

(c) The EPA identification number, name, and address of the generator and the transporter, if available;

(d) A description and the quantity of each unmanifested hazardous waste and facility received;

(e) The method of treatment, storage, or disposal for each hazardous waste;

(f) The certification signed by the owner or operator of the facility or his authorized representative; and

(g) A brief explanation of why the waste was unmanifested, if known.

[*Comment:* Small quantities of hazardous waste are excluded from regulation under this part and do not require a manifest. Where a facility receives unmanifested hazardous wastes, the Agency suggests that the owner or operator obtain from each generator a certification that the waste qualifies for exclusion. Otherwise, the Agency suggests that the owner or operator file an unmanifested waste report for the hazardous waste movement.]

(Approved by the Office of Management and Budget under control number 2050-0012)

[45 FR 33221, May 19, 1980, as amended at 48 FR 3982, Jan. 28, 1983; 50 FR 4514, Jan. 31, 1985]

§ 264.77 Additional reports.

In addition to submitting the biennial reports and unmanifested waste reports described in §§ 264.75 and 264.76, the owner or operator must also report to the Regional Administrator:

(a) Releases, fires, and explosions as specified in § 264.56(j);

(b) Facility closures specified in §264.115; and

(c) As otherwise required by Subparts F and K through N.

[46 FR 2849, Jan. 12, 1981, as amended at 47 FR 32350, July 26, 1982; 48 FR 3982, Jan. 28, 1983]

Subpart F—Releases From Solid Waste Management Units

SOURCE: 47 FR 32350, July 26, 1982, unless otherwise noted.

§ 264.90 Applicability.

(a)(1) Except as provided in paragraph (b) of this section, the regulations in this subpart apply to owners or operators of facilities that treat, store or dispose of hazardous waste. The owner or operator must satisfy the requirements identified in paragraph (a)(2) of this section for all wastes (or constituents thereof) contained in solid waste management units at the facility, regardless of the time at which waste was placed in such units.

(2) All solid waste management units must comply with the requirements in § 264.101. A surface impoundment, waste pile, and land treatment unit or landfill that receives hazardous waste after July 26, 1982 (hereinafter referred to as a "regulated unit") must comply with the requirements of §§ 264.91 through 264.100 in lieu of § 264.101 for purposes of detecting, characterizing and responding to releases to the uppermost aquifer. The finanical responsibility requirements of § 264.101 apply to regulated units.

(b) The owner or operator's regulated unit or units are not subject to regulation for releases into the uppermost aquifer under this subpart if:

(1) The owner or operator is exempted under § 264.1; or

(2) He operates a unit which the Regional Administrator finds:

(i) Is an engineered structure,

(ii) Does not receive or contain liquid waste or waste containing free liquids,

(iii) Is designed and operated to exclude liquid, precipitation, and other run-on and run-off,

(iv) Has both inner and outer layers of containment enclosing the waste,

(v) Has a leak detection system built into each containment layer,

(vi) The owner or operator will provide continuing operation and maintenance of these leak detection systems during the active life of the unit and the closure and post-closure care periods, and

(vii) To a reasonable degree of certainty, will not allow hazardous constituents to migrate beyond the outer containment layer prior to the end of the the post-closure care period.

(3) The Regional Administrator finds, pursuant to § 264.280(d), that the treatment zone of a land treatment unit that qualifies as a regulated unit does not contain levels of hazardous constituents that are above background levels of those constituents by an amount that is statistically significant, and if an unsaturated zone monitoring program meeting the requirements of § 264.278 has not shown a statistically significant increase in hazardous constituents below the treatment zone during the operating life of the unit. An exemption under this paragraph can only relieve an owner or operator of responsibility to meet the requirements of this subpart during the post-closure care period; or

(4) The Regional Administrator finds that there is no potential for migration of liquid from a regulated unit to the uppermost aquifer during the active life of the regulated unit (including the closure period) and the port-closure care period specified under § 264.117. This demonstration must be certified by a qualified geologist or geotechnical engineer. In order to provide an adequate margin of safety in the prediction of potential migration of liquid, the owner or operator must base any predictions made under this paragraph on assumptions that maximize the rate of liquid migration.

(5) He designs and operates a pile in compliance with § 264.250(c).

(c) The regulations under this subpart apply during the active life of the regulated unit (including the closure period). After closure of the regulated unit, the regulations in this subpart:

(1) Do not apply if all waste, waste residues, contaminated containment system components, and contaminated subsoils are removed or decontaminated at closure;

(2) Apply during the post-closure care period under § 264.117 if the owner or operator is conducting a detection monitoring program under § 264.98; or

(3) Apply during the compliance period under § 264.96 if the owner or operator is conducting a compliance monitoring program under § 264.99 or a corrective action program under § 264.100.

(d) Regulations in this subpart may apply to miscellaneous units when necessary to comply with §§ 264.601 through 264.603.

[47 FR 32350, July 26, 1982, as amended at 50 FR 28746, July 15, 1985; 52 FR 46963, Dec. 10, 1987]

§ 264.91 Required programs.

(a) Owners and operators subject to this subpart must conduct a monitoring and response program as follows:

(1) Whenever hazardous constituents under § 264.93 from a regulated unit are detected at the compliance point under § 264.95, the owner or operator must institute a compliance monitoring program under § 264.99;

(2) Whenever the ground-water protection standard under § 264.92 is exceeded, the owner or operator must institute a corrective action program under § 264.100;

(3) Whenever hazardous constituents under § 264.93 from a regulated unit exceed concentration limits under § 264.94 in ground water between the compliance point under § 264.95 and the downgradient facility property boundary, the owner or operator must institute a corrective action program under § 264.100; or

(4) In all other cases, the owner or operator must institute a detection monitoring program under § 264.98.

(b) The Regional Administrator will specify in the facility permit the specific elements of the monitoring and response program. The Regional Administrator may include one or more of the programs identified in paragraph (a) of this section in the facility permit as may be necessary to protect human health and the environment and will specify the circumstances under which each of the programs will be required. In deciding whether to require the owner or operator to be prepared to institute a particular program, the Regional Administrator will consider the potential adverse effects on human health and the environment that might occur before final administrative action on a permit modification application to incorporate such a program could be taken.

§ 264.92 Ground-water protection standard.

The owner or operator must comply with conditions specified in the facility permit that are designed to ensure that hazardous constituents under § 264.93 entering the ground water from a regulated unit do not exceed the concentration limits under § 264.94 in the uppermost aquifer underlying the waste management area beyond the point of compliance under § 264.95 during the compliance period under § 264.96. The Regional Administrator will establish this ground-water protection standard in the facility permit when hazardous constituents have entered the ground water from a regulated unit.

§ 264.93 Hazardous constituents.

(a) The Regional Administrator will specify in the facility permit the hazardous constituents to which the ground-water protection standard of § 264.92 applies. Hazardous constituents are constituents identified in Appendix VIII of Part 261 of this chapter that have been detected in ground water in the uppermost aquifer underlying a regulated unit and that are reasonably expected to be in or derived from waste contained in a regulated unit, unless the Regional Administrator has excluded them under paragraph (b) of this section.

(b) The Regional Administrator will exclude an Appendix VIII constituent from the list of hazardous constituents specified in the facility permit if he finds that the constituent is not capable of posing a substantial present or potential hazard to human health or the environment. In deciding whether to grant an exemption, the Regional Administrator will consider the following:

(1) Potential adverse effects on ground-water quality, considering:

(i) The physical and chemical characteristics of the waste in the regulated unit, including its potential for migration;

(ii) The hydrogeological characteristics of the facility and surrounding land;

(iii) The quantity of ground water and the direction of ground-water flow;

(iv) The proximity and withdrawal rates of ground-water users;

(v) The current and future uses of ground water in the area;

(vi) The existing quality of ground water, including other sources of contamination and their cumulative impact on the ground-water quality;

(vii) The potential for health risks caused by human exposure to waste constituents;

(viii) The potential damage to wildlife, crops, vegetation, and physical structures caused by exposure to waste constituents;

(ix) The persistence and permanence of the potential adverse effects; and

(2) Potential adverse effects on hydraulically-connected surface water quality, considering:

(i) The volume and physical and chemical characteristics of the waste in the regulated unit;

(ii) The hydrogeological characteristics of the facility and surrounding land;

(iii) The quantity and quality of ground water, and the direction of ground-water flow;

(iv) The patterns of rainfall in the region;

(v) The proximity of the regulated unit to surface waters;

(vi) The current and future uses of surface waters in the area and any water quality standards established for those surface waters;

(vii) The existing quality of surface water, including other sources of con-

tamination and the cumulative impact on surface-water quality;

(viii) The potential for health risks caused by human exposure to waste constituents;

(ix) The potential damage to wildlife, crops, vegetation, and physical structures caused by exposure to waste constituents; and

(x) The persistence and permanence of the potential adverse effects.

(c) In making any determination under paragraph (b) of this section about the use of ground water in the area around the facility, the Regional Administrator will consider any identification of underground sources of drinking water and exempted aquifers made under § 144.8 of this chapter.

[47 FR 32350, July 26, 1982, as amended at 48 FR 14294, Apr. 1, 1983]

§ 264.94 Concentration limits.

(a) The Regional Administrator will specify in the facility permit concentration limits in the ground water for hazardous constituents established under § 264.93. The concentration of a hazardous constituent:

(1) Must not exceed the background level of that constituent in the ground water at the time that limit is specified in the permit; or

(2) For any of the constituents listed in Table 1, must not exceed the respective value given in that table if the background level of the constituent is below the value given in Table 1; or

TABLE 1—MAXIMUM CONCENTRATION OF CONSTITUENTS FOR GROUND-WATER PROTECTION

Constituent	Maximum concentration [1]
Arsenic	0.05
Barium	1.0
Cadmium	0.01
Chromium	0.05
Lead	0.05
Mercury	0.002
Selenium	0.01
Silver	0.05
Endrin (1,2,3,4,10,10-hexachloro-1,7-epoxy-1,4,4a,5,6,7,8,9a-octahydro-1, 4-endo, endo-5,8-dimethano naphthalene)	0.0002
Lindane (1,2,3,4,5,6-hexachlorocyclohexane, gamma isomer)	0.004
Methoxychlor (1,1,1-Trichloro-2,2-bis (p-methoxyphenylethane)	0.1

TABLE 1—MAXIMUM CONCENTRATION OF CONSTITUENTS FOR GROUND-WATER PROTECTION—Continued

Constituent	Maximum concentration [1]
Toxaphene ($C_{10}H_{10}Cl_8$, Technical chlorinated camphene, 67-69 percent chlorine)	0.005
2,4-D (2,4-Dichlorophenoxyacetic acid)	0.1
2,4,5-TP Silvex (2,4,5-Trichlorophenoxypropionic acid)	0.01

[1] Milligrams per liter.

(3) Must not exceed an alternate limit established by the Regional Administrator under paragraph (b) of this section.

(b) The Regional Administrator will establish an alternate concentration limit for a hazardous constituent if he finds that the constituent will not pose a substantial present or potential hazard to human health or the environment as long as the alternate concentration limit is not exceeded. In establishing alternate concentration limits, the Regional Administrator will consider the following factors:

(1) Potential adverse effects on ground-water quality, considering:

(i) The physical and chemical characteristics of the waste in the regulated unit, including its potential for migration;

(ii) The hydrogeological characteristics of the facility and surrounding land;

(iii) The quantity of ground water and the direction of ground-water flow;

(iv) The proximity and withdrawal rates of ground-water users;

(v) The current and future uses of ground water in the area;

(vi) The existing quality of ground water, including other sources of contamination and their cumulative impact on the ground-water quality;

(vii) The potential for health risks caused by human exposure to waste constituents;

(viii) The potential damage to wildlife, crops, vegetation, and physical structures caused by exposure to waste constituents;

(ix) The persistence and permanence of the potential adverse effects; and

(2) Potential adverse effects on hydraulically-connected surface-water quality, considering:

(i) The volume and physical and chemical characteristics of the waste in the regulated unit;

(ii) The hydrogeological characteristics of the facility and surrounding land;

(iii) The quantity and quality of ground water, and the direction of ground-water flow;

(iv) The patterns of rainfall in the region;

(v) The proximity of the regulated unit to surface waters;

(vi) The current and future uses of surface waters in the area and any water quality standards established for those surface waters;

(vii) The existing quality of surface water, including other sources of contamination and the cumulative impact on surface water quality;

(viii) The potential for health risks caused by human exposure to waste constituents;

(ix) The potential damage to wildlife, crops, vegetation, and physical structures caused by exposure to waste constituents; and

(x) The persistence and permanence of the potential adverse effects.

(c) In making any determination under paragraph (b) of this section about the use of ground water in the area around the facility the Regional Administrator will consider any identification of underground sources of drinking water and exempted aquifers made under § 144.8 of this chapter.

[47 FR 32350, July 26, 1982, as amended at 48 FR 14294, Apr. 1, 1983]

§ 264.95 Point of compliance.

(a) The Regional Administrator will specify in the facility permit the point of compliance at which the ground-water protection standard of § 264.92 applies and at which monitoring must be conducted. The point of compliance is a vertical surface located at the hydraulically downgradient limit of the waste management area that extends down into the uppermost aquifer underlying the regulated units.

(b) The waste management area is the limit projected in the horizontal plane of the area on which waste will be placed during the active life of a regulated unit.

(1) The waste management area includes horizontal space taken up by any liner, dike, or other barrier designed to contain waste in a regulated unit.

(2) If the facility contains more than one regulated unit, the waste management area is described by an imaginary line circumscribing the several regulated units.

§ 264.96 Compliance period.

(a) The Regional Administrator will specify in the facility permit the compliance period during which the ground-water protection standard of § 264.92 applies. The compliance period is the number of years equal to the active life of the waste management area (including any waste management activity prior to permitting, and the closure period.)

(b) The compliance period begins when the owner or operator initiates a compliance monitoring program meeting the requirements of § 264.99.

(c) If the owner or operator is engaged in a corrective action program at the end of the compliance period specified in paragraph (a) of this section, the compliance period is extended until the owner or operator can demonstrate that the ground-water protection standard of § 264.92 has not been exceeded for a period of three consecutive years.

§ 264.97 General ground-water monitoring requirements.

The owner or operator must comply with the following requirements for any ground-water monitoring program developed to satisfy § 264.98, § 264.99, or § 264.100:

(a) The ground-water monitoring system must consist of a sufficient number of wells, installed at appropriate locations and depths to yield ground-water samples from the uppermost aquifer that:

(1) Represent the quality of ground water that has been affected by leakage from a regulated unit; and

(2) Represent the quality of background water

(b) If a facility contains more than one regulated unit, separate ground-water monitoring systems are not required for each regulated unit provided that provisions for sampling the ground water in the uppermost aquifer will enable detection and measurement at the compliance point of hazardous constituents from the regulated units that have entered the ground water in the uppermost aquifer.

(c) All monitoring wells must be cased in a manner that maintains the integrity of the monitoring-well bore hole. This casing must be screened or perforated and packed with gravel or sand, where necessary, to enable collection of ground-water samples. The annular space (i.e., the space between the bore hole and well casing) above the sampling depth must be sealed to prevent contamination of samples and the ground water.

(d) The ground-water monitoring program must include consistent sampling and analysis procedures that are designed to ensure monitoring results that provide a reliable indication of ground-water quality below the waste management area. At a minimum the program must include procedures and techniques for:

(1) Sample collection;

(2) Sample preservation and shipment;

(3) Analytical procedures; and

(4) Chain of custody control.

(e) The ground-water monitoring program must include sampling and analytical methods that are appropriate for ground-water sampling and that accurately measure hazardous constituents in ground-water samples.

(f) The ground-water monitoring program must include a determination of the ground-water surface elevation each time ground water is sampled.

(g) Where appropriate, the ground-water monitoring program must establish background ground-water quality for each of the hazardous constituents or monitoring parameters or constituents specified in the permit.

(1) In the detection monitoring program under § 264.98, background ground-water quality for a monitoring parameter or constituent must be based on data from quarterly sampling of wells upgradient from the waste management area for one year.

(2) In the compliance monitoring program under § 264.99, background ground-water quality for a hazardous constituent must be based on data from upgradient wells that:

(i) Is available before the permit is issued;

(ii) Accounts for measurement errors in sampling and analysis; and

(iii) Accounts, to the extent feasible, for seasonal fluctuations in background ground-water quality if such fluctuations are expected to affect the concentration of the hazardous constituent.

(3) Background quality may be based on sampling of wells that are not upgradient from the waste management area where:

(i) Hydrogeologic conditions do not allow the owner or operator to determine what wells are upgradient; or

(ii) Sampling at other wells will provide an indication of background ground-water quality that is as representative or more representative than that provided by the upgradient wells.

(4) In developing the data base used to determine a background value for each parameter or constituent, the owner or operator must take a minimum of one sample from each well and a minimum of four samples from the entire system used to determine background ground-water quality, each time the system is sampled.

(h) The owner or operator must use the following statistical procedure in determining whether background values or concentration limits have been exceeded:

(1) If, in a detection monitoring program, the level of a constituent at the compliance point is to be compared to the constituent's background value and that background value has a sample coefficient of variation less than 1.00:

(i) The owner or operator must take at least four portions from a sample at each well at the compliance point and determine whether the difference between the mean of the constituent at each well (using all portions taken) and the background value for the constituent is significant at the 0.05 level using the Cochran's Approximation to the Behrens-Fisher Student's t-test as described in Appendix IV of this part. If the test indicates that the difference is significant, the owner or operator must repeat the same procedure (with at least the same number of portions as used in the first test) with a fresh sample from the monitoring well. If this second round of analyses indicates that the difference is significant, the owner or operator must conclude that a statistically significant change has occurred; or

(ii) The owner or operator may use an equivalent statistical procedure for determining whether a statistically significant change has occurred. The Regional Administrator will specify such a procedure in the facility permit if he finds that the alternative procedure reasonably balances the probability of falsely identifying a non-contaminating regulated unit and the probability of failing to identify a contaminating regulated unit in a manner that is comparable to that of the statistical procedure described in paragraph (h)(1)(i) of this section.

(2) In all other situations in a detection monitoring program and in a compliance monitoring program, the owner or operator must use a statistical procedure providing reasonable confidence that the migration of hazardous constituents from a regulated unit into and through the aquifer will be indicated. The Regional Administrator will specify a statistical procedure in the facility permit that he finds:

(i) Is appropriate for the distribution of the data used to establish background values or concentration limits; and

(ii) Provides a reasonable balance between the probability of falsely identifying a non-contaminating regulated unit and the probability of failing to identify a contaminating regulated unit.

(Approved by the Office of Management and Budget under control number 2050-0033)

[47 FR 32350, July 26, 1982, as amended at 50 FR 4514, Jan. 31, 1985]

§ 264.98 Detection monitoring program.

An owner or operator required to establish a detection monitoring program under this subpart must, at a minimum, discharge the following responsibilities:

(a) The owner or operator must monitor for indicator parameters (e.g., specific conductance, total organic carbon, or total organic halogen), waste constituents, or reaction products that provide a reliable indication of the presence of hazardous constituents in ground water. The Regional Administrator will specify the parameters or constituents to be monitored in the facility permit, after considering the following factors:

(1) The types, quantities, and concentrations of constituents in wastes managed at the regulated unit;

(2) The mobility, stability, and persistance of waste constituents or their reaction products in the unsaturated zone beneath the waste management area;

(3) The detectability of indicator parameters, waste constituents, and reaction products in ground water; and

(4) The concentrations or values and coefficients of variation of proposed monitoring parameters or constituents in the ground-water background.

(b) The owner or operator must install a ground-water monitoring system at the compliance point as specified under § 264.95. The ground-water monitoring system must comply with § 264.97(a)(2), (b), and (c).

(c) The owner or operator must establish a background value for each monitoring parameter or constituent specified in the permit pursuant to paragraph (a) of this section. The permit will specify the background values for each parameter or specify the procedures to be used to calculate the background values.

(1) The owner or operator must comply with § 264.97(g) in developing the data base used to determine background values.

(2) The owner or operator must express background values in a form necessary for the determination of statistically significant increases under § 264.97(h).

(3) In taking samples used in the determination of background values, the owner or operator must use a ground-water monitoring system that complies with § 264.97(a)(1), (b), and (c).

(d) The owner or operator must determine ground-water quality at each monitoring well at the compliance point at least semi-annually during the active life of a regulated unit (including the closure period) and the post-closure care period. The owner or operator must express the ground-water quality at each monitoring well in a form necessary for the determination of statistically significant increases under § 264.97(h).

(e) The owner or operator must determine the ground-water flow rate and direction in the uppermost aquifer at least annually.

(f) The owner or operator must use procedures and methods for sampling and analysis that meet the requirements of § 264.97 (d) and (e).

(g) The owner or operator must determine whether there is a statistically significant increase over background values for any parameter or constituent specified in the permit pursuant to paragraph (a) of this section each time he determines ground-water quality at the compliance point under paragraph (d) of this section.

(1) In determining whether a statistically significant increase has occurred, the owner or operator must compare the ground-water quality at each monitoring well at the compliance point for each parameter or constituent to the background value for that parameter or constituent, according to the statistical procedure specified in the permit under § 264.97(h).

(2) The owner or operator must determine whether there has been a statistically significant increase at each monitoring well at the compliance point within a reasonable time period after completion of sampling. The Regional Administrator will specify that time period in the facility permit, after considering the complexity of the statistical test and the availability of laboratory facilities to perform the analysis of ground-water samples.

(h) If the owner or operator determines, pursuant to paragraph (g) of this section, that there is a statistically significant increase for parameters or constituents specified pursuant to paragraph (a) of this section at any monitoring well at the compliance point must:

(1) Notify the Regional Administrator of this finding in writing within seven days. The notification must indicate what parameters or constituents have shown statistically significant increases;

(2) Immediately sample the ground water in all monitoring wells and determine whether constituents identified in the list in Appendix IX of Part 264 are present and, if so, at what concentration.

(3) Establish a background value for each constituent that has been found at the compliance point under paragraph (h)(2) of this section, as follows:

(i) The owner or operator must comply with § 264.97(g) in developing the data base used to determine background values;

(ii) The owner or operator must express background values in a form necessary for the determination of statistically significant increases under § 264.97(h); and

(iii) In taking samples used in the determination of background values, the owner or operator must use a ground-water monitoring system that complies with § 264.97(a)(1), (b), and (c);

(4) Within 90 days, submit to the Regional Administrator an application for a permit modification to establish a compliance monitoring program meeting the requirements of § 264.99. The application must include the following information:

(i) An identification of the concentration of each constituent found in the ground water at each monitoring well at the compliance point;

(ii) Any proposed changes to the ground-water monitoring system at the facility necessary to meet the requirements of § 264.99;

(iii) Any proposed changes to the monitoring frequency, sampling and analysis procedures or methods, or statistical procedures used at the facility necessary to meet the requirements of § 264.99;

(iv) For each hazardous constituent found at the compliance point, a proposed concentration limit under § 264.94(a)(1) or (2), or a notice of intent to seek a variance under § 264.94(b); and

(5) Within 180 days, submit to the Regional Administrator:

(i) All data necessary to justify any variance sought under § 264.94(b); and

(ii) An engineering feasibility plan for a corrective action program necessary to meet the requirements of § 264.100, unless:

(A) All hazardous constituents identified under paragraph (h)(2) of this section are listed in Table 1 of § 264.94 and their concentrations do not exceed the respective values given in that Table; or

(B) The owner or operator has sought a variance under § 264.94(b) for every hazardous constituent identified under paragraph (h)(2) of this section.

(i) If the owner or operator determines, pursuant to paragraph (g) of this section, that there is a statistically significant increase of parameters or consitutents specified pursuant to paragraph (a) of this section at any monitoring well at the compliance point, he may demonstrate that a source other than a regulated unit caused the increase or that the increase resulted from error in sampling, analysis, or evaluation. While the owner or operator may make a demonstration under this paragraph in addition to, or in lieu of, submitting a permit modification application under paragraph (h)(4) of this section, he is not relieved of the requirement to submit a permit modification application within the time specified in paragraph (h)(4) of this section unless the demonstration made under this paragraph successfully shows that a source other than a regulated unit caused the increase or that the increase resulted from error in sampling, analysis, or evaluation. In making a demonstration under this paragraph, the owner or operator must:

(1) Notify the Regional Administrator in writing within seven days of determining a statistically significant increase at the compliance point that he intends to make a demonstration under this paragraph;

(2) Within 90 days, submit a report to the Regional Administrator which demonstrates that a source other than a regulated unit caused the increase, or that the increase resulted from error in sampling, analysis, or evaluation;

(3) Within 90 days, submit to the Regional Administrator an application for a permit modification to make any appropriate changes to the detection monitoring program at the facility; and

(4) Continue to monitor in accordance with the detection monitoring program established under this section.

(j) If the owner or operator determines that the detection monitoring program no longer satisfies the requirements of this section, he must, within 90 days, submit an application for a permit modification to make any appropriate changes to the program.

(k) The owner or operator must assure that monitoring and corrective action measures necessary to achieve compliance with the ground-water protection standard under § 264.92 are taken during the term of the permit.

(Approved by the Office of Management and Budget under control number 2050-0033)

[47 FR 32350, July 26, 1982, as amended at 50 FR 4514, Jan. 31, 1985; 52 FR 25946, July 9, 1987]

§ 264.99 Compliance monitoring program.

An owner or operator required to establish a compliance monitoring program under this subpart must, at a minimum, discharge the following responsibilities:

(a) The owner or operator must monitor the ground water to determine whether regulated units are in compliance with the ground-water protection standard under § 264.92. The Regional Administrator will specify the ground-water protection standard in the facility permit, including:

(1) A list of the hazardous constituents identified under § 264.93;

(2) Concentration limits under § 264.94 for each of those hazardous constituents;

(3) The compliance point under § 264.95; and

(4) The compliance period under § 264.96.

(b) The owner or operator must install a ground-water monitoring system at the compliance point as

20-142 O—88——17

specified under § 264.95. The ground-water monitoring system must comply with § 264.97(a)(2), (b), and (c).

(c) Where a concentration limit established under paragraph (a)(2) of this section is based on background ground-water guality, the Regional Administrator will specify the concentration limit in the permit as follows:

(1) If there is a high temporal correlation between upgradient and compliance point concentrations of the hazardous constitutents, the owner or op-

[illegible] sampling at upgradient wells each time ground water is sampled at the compliance point. The Regional Administrator will specify the procedures used for determining the concentration limit in this manner in the permit. In all other cases, the concentration limit will be the mean of the pooled data on the concentration of the hazardous constituent.

(2) If a hazardous constituent is identified on Table 1 under § 264.94 and the difference between the respective concentration limit in Table 1 and the background value of that constituent under § 264.97(g) is not statistically significant, the owner or operator must use the background value of the constituent as the concentration limit. In determining whether this difference is statistically significant, the owner or operator must use a statistical procedure providing reasonable confidence that a real difference will be indicated. The statistical procedure must:

(i) Be appropriate for the distribution of the data used to establish background values; and

(ii) Provide a reasonable balance between the probability of falsely identifying a significant difference and the probability of failing to identify a significant difference.

(3) The owner or operator must:

(i) Comply with § 264.97(g) in developing the data base used to determine background values;

(ii) Express background values in a form necessary for the determination of statistically significant increases under § 264.97(h); and

(iii) Use a ground-water monitoring system that complies with § 264.97(a)(1), (b), and (c).

(d) The owner or operator must determine the concentration of hazardous constituents in ground water at each monitoring well at the compliance point at least quarterly during the compliance period. The owner or operator must express the concentration at each monitoring well in a form necessary for the determination of statistically significant increases under § 264.97(h).

(e) The owner or operator must determine the ground-water flow rate at least annually.

(f) The owner or operator must analyze samples from all monitoring wells at the compliance point to determine whether constituents identified in the list in Appendix IX to Part 264 of this chapter are present and, if so, at what concentration. The analysis must be conducted at least annually to determine whether additional Appendix IX constituents are present in the uppermost aquifer. If the owner or operator finds constituents from Appendix IX in the ground water that are not already identified in the permit as monitoring constituents, the owner or operator must report the concentration of these additional constituents to the Regional Administrator within seven days after completion of the analysis.

(g) The owner or operator must use procedures and methods for sampling and analysis that meet the requirements of § 264.97(d) and (e).

(h) The owner or operator must determine whether there is a statistically significant increase over the concentration limits for any hazardous constituents specified in the permit pursuant to paragraph (a) of this section each time he determines the concentration of hazardous constituents in ground water at the compliance point.

(1) In determining whether a statistically significant increase has occurred, the owner or operator must compare the ground-water quality at each monitoring well at the compliance point for each hazardous constituent to the concentration limit for that constituent according to the statistical procedures specified in the permit under § 264.97(h).

(2) The owner or operator must determine whether there has been a statistically significant increase at each monitoring well at the compliance point, within a reasonable time period after completion of sampling. The Regional Administrator will specify that time period in the facility permit, after considering the complexity of the statistical test and the availability of laboratory facilities to perform the analysis of ground-water samples.

(i) If the owner or operator determines, pursuant to paragraph (h) of this [illegible] being exceeded at any monitoring well at the point of compliance, he must:

(1) Notify the Regional Administrator of this finding in writing within seven days. The notification must indicate what concentration limits have been exceeded.

(2) Submit to the Regional Administrator an application for a permit modification to establish a corrective action program meeting the requirements of § 264.100 within 180 days, or within 90 days if an engineering feasibility study has been previously submitted to the Regional Administrator under § 264.98(h)(5). The application must at a minimum include the following information:

(i) A detailed description of corrective actions that will achieve compliance with the ground-water protection standard specified in the permit under paragraph (a) of this section; and

(ii) A plan for a ground-water monitoring program that will demonstrate the effectiveness of the corrective action. Such a ground-water monitoring program may be based on a compliance monitoring program developed to meet the requirements of this section.

(j) If the owner or operator determines, pursuant to paragraph (h) of this section, that the ground-water protection standard is being exceeded at any monitoring well at the point of compliance, he may demonstrate that a source other than a regulated unit caused the increase or that the increase resulted from error in sampling, analysis or evaluation. While the owner or operator may make a demonstration under this paragraph in addition to, or in lieu of, submitting a permit modification application under paragraph (i)(2) of this section, he is not relieved of the requirement to submit a permit modification application within the time specified in paragraph (i)(2) of this section unless the demonstration made under this paragraph successfully shows that a source other than a regulated unit caused the increase or that the increase resulted from error in sampling, analysis, or evaluation. In making a demonstration under this paragraph, the owner or

(1) Notify the Regional Administrator in writing within seven days that he intends to make a demonstration under this paragraph;

(2) Within 90 days, submit a report to the Regional Administrator which demonstrates that a source other than a regulated unit caused the standard to be exceeded or that the apparent noncompliance with the standards resulted from error in sampling, analysis, or evaluation;

(3) Within 90 days, submit to the Regional Administrator an application for a permit modification to make any appropriate changes to the compliance monitoring program at the facility; and

(4) Continue to monitor in accord with the compliance monitoring program established under this section.

(k) If the owner or operator determines that the compliance monitoring program no longer satisfies the requirements of this section, he must, within 90 days, submit an application for a permit modification to make any appropriate changes to the program.

(l) The owner or operator must assure that monitoring and corrective action measures necessary to achieve compliance with the ground-water protection standard under § 264.92 are taken during the term of the permit.

(Approved by the Office of Management and Budget under control number 2050-0033)

[47 FR 32350, July 26, 1982, as amended at 50 FR 4514, Jan. 31, 1985; 52 FR 25946, July 9, 1987]

§ 264.100 Corrective action program.

An owner or operator required to establish a corrective action program under this subpart must, at a mini-

mum, discharge the following responsibilities:

(a) The owner or operator must take corrective action to ensure that regulated units are in compliance with the ground-water protection standard under § 264.92. The Regional Administrator will specify the ground-water protection standard in the facility permit, including:

(1) A list of the hazardous constituents identified under § 264.93;

(2) Concentration limits under § 264.94 for each of those hazardous constituents;

(3) The compliance point under § 264.95; and

(4) The compliance period under § 264.96.

(b) The owner or operator must implement a corrective action program that prevents hazardous constituents from exceeding their respective concentration limits at the compliance point by removing the hazardous waste constituents or treating them in place. The permit will specify the specific measures that will be taken.

(c) The owner or operator must begin corrective action within a reasonable time period after the ground-water protection standard is exceeded. The Regional Administrator will specify that time period in the facility permit. If a facility permit includes a corrective action program in addition to a compliance monitoring program, the permit will specify when the corrective action will begin and such a requirement will operate in lieu of § 264.99(i)(2).

(d) In conjunction with a corrective action program, the owner or operator must establish and implement a ground-water monitoring program to demonstrate the effectiveness of the corrective action program. Such a monitoring program may be based on the requirements for a compliance monitoring program under § 264.99 and must be as effective as that program in determining compliance with the ground-water protection standard under § 264.92 and in determining the success of a corrective action program under paragraph (e) of this section, where appropriate.

(e) In addition to the other requirements of this section, the owner or operator must conduct a corrective action program to remove or treat in place any hazardous constituents under § 264.93 that exceed concentration limits under § 264.94 in ground-water:

(1) Between the compliance point under § 264.95 and the downgradient property boundary; and

(2) Beyond the facility boundary, where necessary to protect human health and the environment, unless the owner or operator demonstrates to the satisfaction of the Regional Administrator that, despite the owner's or operator's best efforts, the owner or operator was unable to obtain the necessary permission to undertake such action. The owner/operator is not relieved of all responsibility to clean up a release that has migrated beyond the facility boundary where off-site access is denied. On-site measures to address such releases will be determined on a case-by-case basis.

(3) Corrective action measures under this paragraph must be initiated and completed within a reasonable period of time considering the extent of contamination.

(4) Corrective action measures under this paragraph may be terminated once the concentration of hazardous constituents under § 264.93 is reduced to levels below their respective concentration limits under § 264.94.

(f) The owner or operator must continue corrective action measures during the compliance period to the extent necessary to ensure that the ground-water protection standard is not exceeded. If the owner or operator is conducting corrective action at the end of the compliance period, he must continue that corrective action for as long as necessary to achieve compliance with the ground-water protection standard. The owner or operator may terminate corrective action measures taken beyond the period equal to the active life of the waste management area (including the closure period) if he can demonstrate, based on data from the ground-water monitoring program under paragraph (d) of this section, that the ground-water protection standard of § 264.92 has not been exceeded for a period of three consecutive years.

(g) The owner or operator must report in writing to the Regional Administrator on the effectiveness of the corrective action program. The owner or operator must submit these reports semi-annually.

(h) If the owner or operator determines that the corrective action program no longer satisfies the requirements of this section, he must, within 90 days, submit an application for a permit modification to make any appropriate changes to the program.

(Approved by the Office of Management and Budget under control number 2050-0033)

[47 FR 32350, July 26, 1985, as amended at 50 FR 4514, Jan. 31, 1985; 52 FR 45798, Dec. 1, 1987]

§ 264.101 Corrective action for solid waste management units.

(a) The owner or operator of a facility seeking a permit for the treatment, storage or disposal of hazardous waste must institute corrective action as necessary to protect human health and the environment for all releases of hazardous waste or constituents from any solid waste management unit at the facility, regardless of the time at which waste was placed in such unit.

(b) Corrective action will be specified in the permit. The permit will contain schedules of compliance for such corrective action (where such corrective action cannot be completed prior to issuance of the permit) and assurances of financial responsibility for completing such corrective action.

(c) The owner or operator must implement corrective actions beyond the facility property boundary, where necessary to protect human health and the environment, unless the owner or operator demonstrates to the satisfaction of the Regional Administrator that, despite the owner's or operator's best efforts, the owner or operator was unable to obtain the necessary permission to undertake such actions. The owner/operator is not relieved of all responsibility to clean up a release that has migrated beyond the facility boundary where off-site access is denied. On-site measures to address such releases will be determined on a case-by-case basis. Assurances of financial responsibility for such corrective action must be provided.

[50 FR 28747, July 15, 1985, as amended at 52 FR 45798, Dec. 1, 1987]

Subpart G—Closure and Post-Closure

SOURCE: 51 FR 16444, May 2, 1986, unless otherwise noted.

§ 264.110 Applicability.

Except as § 264.1 provides otherwise:

(a) Sections 264.111 through 264.115 (which concern closure) apply to the owners and operators of all hazardous waste management facilities; and

(b) Sections 264.116 through 264.120 (which concern post-closure care) apply to the owners and operators of:

(1) All hazardous waste disposal facilities; and

(2) Waste piles and surface impoundments from which the owner or operator intends to remove the wastes at closure to the extent that these sections are made applicable to such facilities in § 264.228 or § 264.258.

(3) Tank systems that are required under § 264.197 to meet the requirements for landfills.

[51 FR 16444, May 2, 1986, as amended at 51 FR 25472, July 14, 1986]

§ 264.111 Closure performance standard.

The owner or operator must close the facility in a manner that:

(a) Minimizes the need for further maintenance; and

(b) Controls, minimizes or eliminates, to the extent necessary to protect human health and the environment, post-closure escape of hazardous waste, hazardous constituents, leachate, contaminated run-off, or hazardous waste decomposition products to the ground or surface waters or to the atmosphere; and

(c) Complies with the closure requirements of this subpart, including, but not limited to, the requirements of §§ 264.178, 264.197, 264.228, 264.258, 264.280, 264.310, 264.351, and 264.601 through 264.603.

[51 FR 16444, May 2, 1986, as amended at 52 FR 46963, Dec. 10, 1987]

§ 264.112 Closure plan; amendment of plan.

(a) *Written plan.* (1) The owner or operator of a hazardous waste management facility must have a written closure plan. In addition, certain surface impoundments and waste piles from which the owner or operator intends to remove or decontaminate the hazardous waste at partial or final closure are required by §§ 264.228(c)(1)(i) and 264.258(c)(1)(i) to have contingent closure plans. The plan must be submitted with the permit application, in accordance with § 270.14(b)(13) of this chapter, and approved by the Regional Administrator as part of the permit issuance procedures under Part 124 of this chapter. In accordance with § 270.32 of this chapter, the approved closure plan will become a condition of any RCRA permit.

(2) The Director's approval of the plan must ensure that the approved closure plan is consistent with §§ 264.111 through 264.115 and the applicable requirements of §§ 264.90 *et seq.*, 264.178, 264.197, 264.228, 264.258, 264.280, 264.310, 264.351, and 264.601. Until final cisoure is completed and certified in accordance with § 264.115, a copy of the approved plan and all approved revisions must be furnished to the Director upon request, including request by mail.

(b) *Content of plan.* The plan must identify steps necessary to perform partial and/or final closure of the facility at any point during its active life. The closure plan must include, at least:

(1) A description of how each hazardous waste management unit at the facility will be closed in accordance with § 264.111;

(2) A description of how final closure of the facility will be conducted in accordance with § 264.111. The description must identify the maximum extent of the operations which will be unclosed during the active life of the facility; and

(3) An estimate of the maximum inventory of hazardous wastes ever onsite over the active life of the facility and a detailed description of the methods to be used during partial closures and final closure, including, but not limited to, methods for removing, transporting, treating, storing, or disposing of all hazardous wastes, and identification of the type(s) of the offsite hazardous waste management units to be used, if applicable; and

(4) A detailed description of the steps needed to remove or decontaminate all hazardous waste residues and contaminated containment system components, equipment, structures, and soils during partial and final closure, including, but not limited to, procedures for cleaning equipment and removing contaminated soils, methods for sampling and testing surrounding soils, and criteria for determining the extent of decontamination required to satisfy the closure performance standard; and

(5) A detailed description of other activities necessary during the closure period to ensure that all partial closures and final closure satisfy the closure performance standards, including, but not limited to, ground-water monitoring, leachate collection, and run-on and run-off control; and

(6) A schedule for closure of each hazardous waste management unit and for final closure of the facility. The schedule must include, at a minimum, the total time required to close each hazardous waste management unit and the time required for intervening closure activities which will allow tracking of the progress of partial and final closure. (For example, in the case of a landfill unit, estimates of the time required to treat or dispose of all hazardous waste inventory and of the time required to place a final cover must be included.)

(7) For facilities that use trust funds to establish financial assurance under § 264.143 or § 264.145 and that are expected to close prior to the expiration of the permit, an estimate of the expected year of final closure.

(c) *Amendment of plan.* The owner or operator must submit a written request for a permit modification to authorize a change in operating plans, facility design, or the approved closure plan in accordance with the procedures in Parts 124 and 270. The written request must include a copy of the amended closure plan for approval by the Regional Administrator.

(1) The owner or operator may submit a written request to the Regional Administrator for a permit modification to amend the closure plan at any time prior to the notification of partial or final closure of the facility.

(2) The owner or operator must submit a written request for a permit modification to authorize a change in the approved closure plan whenever:

(i) Changes in operating plans or facility design affect the closure plan, or

(ii) There is a change in the expected year of closure, if applicable, or

(iii) In conducting partial or final closure activities, unexpected events require a modification of the approved closure plan.

(3) The owner or operator must submit a written request for a permit modification including a copy of the amended closure plan for approval at least 60 days prior to the proposed change in facility design or operation, or no later than 60 days after an unexpected event has occurred which has affected the closure plan. If an unexpected event occurs during the partial or final closure period, the owner or operator must request a permit modification no later than 30 days after the unexpected event. An owner or operator of a surface impoundment or waste pile that intends to remove all hazardous waste at closure and is not otherwise required to prepare a contingent closure plan under § 264.228(c)(1)(i) or § 264.258(c)(1)(i), must submit an amended closure plan to the Regional Administrator no later than 60 days from the date that the owner or operator or Regional Administrator determines that the hazardous waste management unit must be closed as a landfill, subject to the requirements of § 264.310, or no later than 30 days from that date if the determination is made during partial or final closure. The Regional Administrator will approve, disapprove, or modify this amended plan in accordance with the procedures in Parts 124 and 270. In accordance with § 270.32 of this chapter, the approved closure plan will become a condition of any RCRA permit issued.

(4) The Regional Administrator may request modifications to the plan under the conditions described in § 264.112(c)(2). The owner or operator must submit the modified plan within 60 days of the Regional Administrator's request, or within 30 days if the change in facility conditions occurs during partial or final closure. Any modifications requested by the Regional Administrator will be approved in accordance with the procedures in Parts 124 and 270.

(d) *Notification of partial closure and final closure.* (1) The owner or operator must notify the Regional Administrator in writing at least 60 days prior to the date on which he expects to begin closure of a surface impoundment, waste pile, land treatment or landfill unit, or final closure of a facility with such a unit. The owner or operator must notify the Regional Administrator in writing at least 45 days prior to the date on which he expects to begin final closure of a facility with only treatment or storage tanks, container storage, or incinerator units to be closed.

(2) The date when he "expects to begin closure" must be either no later than 30 days after the date on which any hazardous waste management unit receives the known final volume of hazardous wastes or, if there is a reasonable possibility that the hazardous waste management unit will receive additional hazardous wastes, no later than one year after the date on which the unit received the most recent volume of hazardous waste. If the owner or operator of a hazardous waste management unit can demonstrate to the Regional Administrator that the hazardous waste management unit or facility has the capacity to receive additional hazardous wastes and he has taken, and will continue to take, all steps to prevent threats to human health and the environment, including compliance with all applicable permit requirements, the Regional Administrator may approve an extension to this one-year limit.

(3) If the facility's permit is terminated, or if the facility is otherwise ordered, by judicial decree or final order under section 3008 of RCRA, to cease receiving hazardous wastes or to close, then the requirements of this paragraph do not apply. However, the

owner or operator must close the facility in accordance with the deadlines established in § 264.113.

(e) *Removal of wastes and decontamination or dismantling of equipment.* Nothing in this section shall preclude the owner or operator from removing hazardous wastes and decontaminating or dismantling equipment in accordance with the approved partial or final closure plan at any time before or after notification of partial or final closure.

[51 FR 16444, May 2, 1986, as amended at 52 FR 46963, Dec. 10, 1987]

§ 264.113 Closure; time allowed for closure.

(a) Within 90 days after receiving the final volume of hazardous wastes at a hazardous waste management unit or facility, the owner or operator must treat, remove from the unit or facility, or dispose of on-site, all hazardous wastes in accordance with the approved closure plan. The Regional Administrator may approve a longer period if the owner or operator complies with all applicable requirements for requesting a modification to the permit and demonstrates that:

(1)(i) The activities required to comply with this paragraph will, of necessity, take longer than 90 days to complete; or

(ii)(A) The hazardous waste management unit or facility has the capacity to receive additional hazardous wastes; and

(B) There is a reasonable likelihood that he or another person will recommence operation of the hazardous waste management unit or the facility within one year; and

(C) Closure of the hazardous waste management unit or facility would be incompatible with continued operation of the site; and

(2) He has taken and will continue to take all steps to prevent threats to human health and the environment, including compliance with all applicable permit requirements.

(b) The owner or operator must complete partial and final closure activities in accordance with the approved closure plan and within 180 days after receiving the final volume of hazardous wastes at the hazardous waste management unit or facility. The Regional Administrator may approve an extension to the closure period if the owner or operator complies with all applicable requirements for requesting a modification to the permit and demonstrates that:

(1)(i) The partial or final closure activities will, of necessity, take longer than 180 days to complete; or

(ii)(A) The hazardous waste management unit or facility has the capacity to receive additional hazardous wastes; and

(B) There is reasonable likelihood that he or another person will recommence operation of the hazardous waste management unit or the facility within one year; and

(C) Closure of the hazardous waste management unit or facility would be incompatible with continued operation of the site; and

(2) He has taken and will continue to take all steps to prevent threats to human health and the environment from the unclosed but not operating hazardous waste management unit or facility, including compliance with all applicable permit requirements.

(c) The demonstrations referred to in § 264.113(a) and (b) must be made as follows: (1) The demonstrations in paragraph (a) must be made at least 30 days prior to the expiration of the 90-day period in paragraph (a); and (2) the demonstration in paragraph (b) must be made at least 30 days prior to the expiration of the 180-day period in paragraph (b) of this section.

§ 264.114 Disposal or decontamination of equipment, structures and soils.

During the partial and final closure periods, all contaminated equipment, structures, and soils must be properly disposed of or decontaminated, unless otherwise specified in §§ 264.228, 264.258, 264.280, or § 264.310, or under the authority of §§ 264.601 and 264.603. By removing any hazardous wastes or hazardous constituents during partial and final closure, the owner or operator may become a generator of hazardous waste and must handle that waste in accordance with all applicable requirements of Part 262 of this chapter.

[51 FR 16444, May 2, 1986, as amended at 52 FR 46963, Dec. 10, 1987]

§ 264.115 Certification of closure.

Within 60 days of completion of closure of each hazardous waste surface impoundment, waste pile, land treatment, and landfill unit, and within 60 days of the completion of final closure, the owner or operator must submit to the Regional Administrator, by registered mail, a certification that the hazardous waste management unit or facility, as applicable, has been closed in accordance with the specifications in the approved closure plan. The certification must be signed by the owner or operator and by an independent registered professional engineer. Documentation supporting the independent registered professional engineer's certification must be furnished to the Regional Administrator upon request until he releases the owner or operator from the financial assurance requirements for closure under § 264.143(i).

§ 264.116 Survey plat.

No later than the submission of the certification of closure of each hazardous waste disposal unit, the owner or operator must submit to the local zoning authority, or the authority with jurisdiction over local land use, and to the Regional Administrator, a survey plat indicating the location and dimensions of landfills cells or other hazardous waste disposal units with respect to permanently surveyed benchmarks. This plat must be prepared and certified by a professional land surveyor. The plat filed with the local zoning authority, or the authority with jurisdiction over local land use, must contain a note, prominently displayed, which states the owner's or operator's obligation to restrict disturbance of the hazardous waste disposal unit in accordance with the applicable Subpart G regulations.

§ 264.117 Post-closure care and use of property.

(a)(1) Post-closure care for each hazardous waste management unit subject to the requirements of §§ 264.117 through 264.120 must begin after completion of closure of the unit and continue for 30 years after that date and must consist of at least the following:

(i) Monitoring and reporting in accordance with the requirements of Subparts F, K, L, M, N, and X of this part; and

(ii) Maintenance and monitoring of waste containment systems in accordance with the requirements of Subparts F, K, L, M, N, and X of this part.

(2) Any time preceding partial closure of a hazardous waste management unit subject to post-closure care requirements or final closure, or any time during the post-closure period for a particular unit, the Regional Administrator may, in accordance with the permit modification procedures in Parts 124 and 270:

(i) Shorten the post-closure care period applicable to the hazardous waste management unit, or facility, if all disposal units have been closed, if he finds that the reduced period is sufficient to protect human health and the environment (e.g., leachate or ground-water monitoring results, characteristics of the hazardous wastes, application of advanced technology, or alternative disposal, treatment, or reuse techniques indicate that the hazardous waste management unit or facility is secure); or

(ii) Extend the post-closure care period applicable to the hazardous waste management unit or facility if he finds that the extended period is necessary to protect human health and the environment (e.g., leachate or ground-water monitoring results indicate a potential for migration of hazardous wastes at levels which may be harmful to human health and the environment).

(b) The Regional Administrator may require, at partial and final closure, continuation of any of the security requirements of § 264.14 during part or all of the post-closure period when:

(1) Hazardous wastes may remain exposed after completion of partial or final closure; or

(2) Access by the public or domestic livestock may pose a hazard to human health.

(c) Post-closure use of property on or in which hazardous wastes remain after partial or final closure must never be allowed to disturb the integri-

ty of the final cover, liner(s), or any other components of the containment system, or the function of the facility's monitoring systems, unless the Regional Administrator finds that the disturbance:

(1) Is necessary to the proposed use of the property, and will not increase the potential hazard to human health or the environment; or

(2) Is necessary to reduce a threat to human health or the environment.

(d) All post-closure care activities must be in accordance with the provisions of the approved post-closure plan as specified in § 264.118.

[51 FR 16444, May 2, 1986, as amended at 52 FR 46963, Dec. 10, 1987]

§ 264.118 Post-closure plan; amendment of plan.

(a) *Written Plan.* The owner or operator of a hazardous waste disposal unit must have a written post-closure plan. In addition, certain surface impoundments and waste piles from which the owner or operator intends to remove or decontaminate the hazardous wastes at partial or final closure are required by §§ 264.228(c)(1)(ii) and 264.258(c)(1)(ii) to have contingent post-closure plans. Owners or operators of surface impoundments and waste piles not otherwise required to prepare contingent post-closure plans under §§ 264.228(c)(1)(ii) and 264.258(c)(1)(ii) must submit a post-closure plan to the Regional Administrator within 90 days from the date that the owner or operator or Regional administrator determines that the hazardous waste management unit must be closed as a landfill, subject to the requirements of §§ 264.117 through 264.120. The plan must be submitted with the permit application, in accordance with § 270.14(b)(13) of this chapter, and approved by the Regional Administrator as part of the permit issuance procedures under Part 124 of this chapter. In accordance with § 270.32 of this chapter, the approved post-closure plan will become a condition of any RCRA permit issued.

(b) For each hazardous waste management unit subject to the requirements of this section, the post-closure plan must identify the activities that will be carried on after closure of each disposal unit and the frequency of these activities, and include at least:

(1) A description of the planned monitoring activities and frequencies at which they will be performed to comply with Subparts F, K, L, M, N, and X of this part during the post-closure care period; and

(2) A description of the planned maintenance activities, and frequencies at which they will be performed, to ensure:

(i) The integrity of the cap and final cover or other containment systems in accordance with the requirements of Subparts F, K, L, M, N, and X of this part; and

(ii) The function of the monitoring equipment in accordance with the requirements of Subparts, F, K, L, M, N, and X of this part; and

(3) The name, address, and phone number of the person or office to contact about the hazardous waste disposal unit or facility during the post-closure care period.

(c) Until final closure of the facility, a copy of the approved post-closure plan must be furnished to the Regional Administrator upon request, including request by mail. After final closure has been certified, the person or office specified in § 264.188(b)(3) must keep the approved post-closure plan during the remainder of the post-closure period.

(d) *Amendment of plan.* The owner or operator must request a permit modification to authorize a change in the approved post-closure plan in accordance with the applicable requirements of Parts 124 and 270. The written request must include a copy of the amended post-closure plan for approval by the Regional Administrator.

(1) The owner or operator may submit a written request to the Regional Administrator for a permit modification to amend the post-closure plan at any time during the active life of the facility or during the post-closure care period.

(2) The owner or operator must submit a written request for a permit modification to authorize a change in the approved post-closure plan whenever:

(i) Changes in operating plans or facility design affect the approved post-closure plan, or

(ii) There is a change in the expected year of final closure, if applicable, or

(iii) Events which occur during the active life of the facility, including partial and final closures, affect the approved post-closure plan.

(3) The owner or operator must submit a written request for a permit modification at least 60 days prior to the proposed change in facility design or operation, or no later than 60 days after an unexpected event has occurred which has affected the post-closure plan. An owner or operator of a surface impoundment or waste pile that intends to remove all hazardous waste at closure and is not otherwise required to submit a contingent post-closure plan under §§ 264.228(c)(1)(ii) and 264.258(c)(1)(ii) must submit a post-closure plan to the Regional Administrator no later than 90 days after the date that the owner or operator or Regional Administrator determines that the hazardous waste management unit must be closed as a landfill, subject to the requirements of § 264.310. The Regional Administrator will approve, disapprove or modify this plan in accordance with the procedures in Parts 124 and 270. In accordance with § 270.32 of this chapter, the approved post-closure plan will become a permit condition.

(4) The Regional Administrator may request modifications to the plan under the conditions described in § 264.118(d)(2). The owner or operator must submit the modified plan no later than 60 days after the Regional Administrator's request, or no later than 90 days if the unit is a surface impoundment or waste pile not previously required to prepare a contingent post-closure plan. Any modifications requested by the Regional Administrator will be approved, disapproved, or modified in accordance with the procedures in Parts 124 and 270.

[51 FR 16444, May 2, 1986, as amended at 52 FR 46964, Dec. 10, 1987]

§ 264.119 Post-closure notices.

(a) No later than 60 days after certification of closure of each hazardous waste disposal unit, the owner or operator must submit to the local zoning authority, or the authority with jurisdiction over local land use, and to the Regional Administrator a record of the type, location, and quantity of hazardous wastes disposed of within each cell or other disposal unit of the facility. For hazardous wastes disposed of before January 12, 1981, the owner or operator must identify the type, location, and quantity of the hazardous wastes to the best of his knowledge and in accordance with any records he has kept.

(b) Within 60 days of certification of closure of the first hazardous waste disposal unit and within 60 days of certification of closure of the last hazardous waste disposal unit, the owner or operator must:

(1) Record, in accordance with State law, a notation on the deed to the facility property—or on some other instrument which is normally examined during title search—that will in perpetuity notify any potential purchaser of the property that:

(i) The land has been used to manage hazardous wastes; and

(ii) Its use is restricted under 40 CFR Subpart G regulations; and

(iii) The survey plat and record of the type, location, and quantity of hazardous wastes disposed of within each cell or other hazardous waste disposal unit of the facility required by §§ 264.116 and 264.119(a) have been filed with the local zoning authority or the authority with jurisdiction over local land use and with the Regional Administrator; and

(2) Submit a certification, signed by the owner or operator, that he has recorded the notation specified in paragraph (b)(1) of this section, including a copy of the document in which the notation has been placed, to the Regional Administrator.

(c) If the owner or operator or any subsequent owner or operator of the land upon which a hazardous waste disposal unit is located wishes to remove hazardous wastes and hazardous waste residues, the liner, if any, or contaminated soils, he must request a modification to the post-closure permit in accordance with the applicable requirements in Parts 124 and 270.

The owner or operator must demonstrate that the removal of hazardous wastes will satisfy the criteria of § 264.117(c). By removing hazardous waste, the owner or operator may become a generator of hazardous waste and must manage it in accordance with all applicable requirements of this chapter. If he is granted a permit modification or otherwise granted approval to conduct such removal activities, the owner or operator may request that the Regional Administrator approve either:

(1) The removal of the notation on the deed to the facility property or other instrument normally examined during title search; or

(2) The addition of a notation to the deed or instrument indicating the removal of the hazardous waste.

§ 264.120 Certification of completion of post-closure care.

No later than 60 days after completion of the established post-closure care period for each hazardous waste disposal unit, the owner or operator must submit to the Regional Administrator, by registered mail, a certification that the post-closure care period for the hazardous waste disposal unit was performed in accordance with the specifications in the approved post-closure plan. The certification must be signed by the owner or operator and an independent registered professional engineer. Documentation supporting the independent registered professional engineer's certification must be furnished to the Regional Administrator upon request until he releases the owner or operator from the financial assurance requirements for post-closure care under § 264.145(i).

Subpart H—Financial Requirements

SOURCE: 47 FR 15047, Apr. 7, 1982, unless otherwise noted.

§ 264.140 Applicability.

(a) The requirements of §§ 264.142, 264.143, and 264.147 through 264.151 apply to owners and operators of all hazardous waste facilities, except as provided otherwise in this section or in § 264.1.

(b) The requirements of §§ 264.144 and 264.145 apply only to owners and operators of:

(1) Disposal facilities, and

(2) Piles, and surface impoundments from which the owner or operator intends to remove the wastes at closure, to the extent that these sections are made applicable to such facilities in §§ 264.228 and 264.258.

(3) Tank systems that are required under § 264.197 to meet the requirements for landfills.

(c) States and the Federal government are exempt from the requirements of this subpart.

[47 FR 15047, Apr. 7, 1982, as amended at 47 FR 32357, July 26, 1982; 51 FR 25472, July 14, 1986]

§ 264.141 Definitions of terms as used in this subpart.

(a) *"Closure plan"* means the plan for closure prepared in accordance with the requirements of § 264.112.

(b) *"Current closure cost estimate"* means the most recent of the estimates prepared in accordance with § 264.142 (a), (b), and (c).

(c) *"Current post-closure cost estimate"* means the most recent of the estimates prepared in accordance with § 264.144 (a), (b), and (c).

(d) *"Parent corporation"* means a corporation which directly owns at least 50 percent of the voting stock of the corporation which is the facility owner or operator; the latter corporation is deemed a "subsidiary" of the parent corporation.

(e) *"Post-closure plan"* means the plan for post-closure care prepared in accordance with the requirements of §§ 264.117 through 264.120.

(f) The following terms are used in the specifications for the financial tests for closure, post-closure care, and liability coverage. The definitions are intended to assist in the understanding of these regulations and are not intended to limit the meanings of terms in a way that conflicts with generally accepted accounting practices.

"Assets" means all existing and all probable future economic benefits obtained or controlled by a particular entity.

"Current assets" means cash or other assets or resources commonly identified as those which are reasonably expected to be realized in cash or sold or consumed during the normal operating cycle of the business.

"Current liabilities" means obligations whose liquidation is reasonably expected to require the use of existing resources properly classifiable as current assets or the creation of other current liabilities.

"Current plugging and abandonment cost estimate" means the most recent of the estimates prepared in accordance with § 144.62(a), (b), and (c) of this title.

"Independently audited" refers to an audit performed by an independent certified public accountant in accordance with generally accepted auditing standards.

"Liabilities" means probable future sacrifices of economic benefits arising from present obligations to transfer assets or provide services to other entities in the future as a result of past transactions or events.

"Net working capital" means current assets minus current liabilities.

"Net worth" means total assets minus total liabilities and is equivalent to owner's equity.

"Tangible net worth" means the tangible assets that remain after deducting liabilities; such assets would not include intangibles such as goodwill and rights to patents or royalties.

(g) In the liability insurance requirements the terms *"bodily injury"* and *"property damage"* shall have the meanings given these terms by applicable State law. However, these terms do not include those liabilities which, consistent with standard industry practices, are excluded from coverage in liability policies for bodily injury and property damage. The Agency intends the meanings of other terms used in the liability insurance requirements to be consistent with their common meanings within the insurance industry. The definitions given below of several of the terms are intended to assist in the understanding of these regulations and are not intended to limit their meanings in a way that conflicts with general insurance industry usage.

"Accidental occurrence" means an accident, including continuous or repeated exposure to conditions, which results in bodily injury or property damage neither expected nor intended from the standpoint of the insured.

"Legal defense costs" means any expenses that an insurer incurs in defending against claims of third parties brought under the terms and conditions of an insurance policy.

"Nonsudden accidental occurrence" means an occurrence which takes place over time and involves continuous or repeated exposure.

"Sudden accidental occurrence" means an occurrence which is not continuous or repeated in nature.

[47 FR 16554, Apr. 16, 1982, as amended at 51 FR 16447, May 2, 1986]

§ 264.142 Cost estimate for closure.

(a) The owner or operator must have a detailed written estimate, in current dollars, of the cost of closing the facility in accordance with the requirements in §§ 264.111 through 264.115 and applicable closure requirements in §§ 264.178, 264.197, 264.228, 264.258, 264.280, 264.310, 264.351, and 264.601 through 264.603.

(1) The estimate must equal the cost of final closure at the point in the facility's active life when the extent and manner of its operation would make closure the most expensive, as indicated by its closure plan (see § 264.112(b)); and

(2) The closure cost estimate must be based on the costs to the owner or operator of hiring a third party to close the facility. A third party is a party who is neither a parent nor a subsidiary of the owner or operator. (See definition of parent corporation in § 264.141(d).) The owner or operator may use costs for on-site disposal if he can demonstrate that on-site disposal capacity will exist at all times over the life of the facility.

(3) The closure cost estimate may not incorporate any salvage value that may be realized with the sale of hazardous wastes, facility structures or equipment, land, or other assets associated with the facility at the time of partial or final closure.

(4) The owner or operator may not incorporate a zero cost for hazardous wastes that might have economic value.

(b) During the active life of the facility, the owner or operator must adjust the closure cost estimate for inflation within 60 days prior to the anniversary date of the establishment of the financial instrument(s) used to comply with § 264.143. For owners and operators using the financial test or corporate guarantee, the closure cost estimate must be updated for inflation within 30 days after the close of the firm's fiscal year and before submission of updated information to the Regional Administrator as specified in § 264.143(f)(3). The adjustment may be made by recalculating the maximum costs of closure in current dollars, or by using an inflation factor derived from the most recent Implicit Price Deflator for Gross National Product published by the U.S. Department of Commerce in its *Survey of Current Business*, as specified in paragraphs (b)(1) and (2) of this section. The inflation factor is the result of dividing the latest published annual Deflator by the Deflator for the previous year.

(1) The first adjustment is made by multiplying the closure cost estimate by the inflation factor. The result is the adjusted closure cost estimate.

(2) Subsequent adjustments are made by mutliplying the lastest adjusted closure cost estimate by the latest inflation factor.

(c) During the active life of the facility, the owner or operator must revise the closure cost estimate no later than 30 days after the Regional Administrator has approved the request to modify the closure plan, if the change in the closure plan increases the cost of closure. The revised closure cost estimate must be adjusted for inflation as specified in § 264.142(b).

(d) The owner or operator must keep the following at the facility during the operating life of the facility: The latest closure cost estimate prepared in accordance with § 264.142 (a) and (c) and, when this estimate has been adjusted in accordance with § 264.142(b), the latest adjusted closure cost estimate.

(Approved by the Office of Management and Budget under control number 2050-0036)

[47 FR 15047, Apr. 7, 1982, as amended at 50 FR 4514, Jan. 31, 1985; 51 FR 16447, May 2, 1986; 52 FR 46964, Dec. 10, 1987]

§ 264.143 Financial assurance for closure.

An owner or operator of each facility must establish financial assurance for closure of the facility. He must choose from the options as specified in paragraphs (a) through (f) of this section.

(a) *Closure trust fund.* (1) An owner or operator may satisfy the requirements of this section by establishing a closure trust fund which conforms to the requirements of this paragraph and submitting an originally signed duplicate of the trust agreement to the Regional Administrator. An owner or operator of a new facility must submit the originally signed duplicate of the trust agreement to the Regional Administrator at least 60 days before the date on which hazardous waste is first received for treatment, storage, or disposal. The trustee must be an entity which has the authority to act as a trustee and whose trust operations are regulated and examined by a Federal or State agency.

(2) The wording of the trust agreement must be identical to the wording specified in § 264.151(a)(1), and the trust agreement must be accompanied by a formal certification of acknowledgment (for example, see § 264.151(a)(2)). Schedule A of the trust agreement must be updated within 60 days after a change in the amount of the current closure cost estimate covered by the agreement.

(3) Payments into the trust fund must be made annually by the owner or operator over the term of the initial RCRA permit or over the remaining operating life of the facility as estimated in the closure plan, whichever period is shorter; this period is hereafter referred to as the "pay-in period." The payments into the closure trust fund must be made as follows:

(i) For a new facility, the first payment must be made before the initial receipt of hazardous waste for treatment, storage, or disposal. A receipt from the trustee for this payment

must be submitted by the owner or operator to the Regional Administrator before this initial receipt of hazardous waste. The first payment must be at least equal to the current closure cost estimate, except as provided in § 264.143(g), divided by the number of years in the pay-in period. Subsequent payments must be made no later than 30 days after each anniversary date of the first payment. The amount of each subsequent payment must be determined by this formula:

$$\text{Next payment} = \frac{CE - CV}{Y}$$

where CE is the current closure cost estimate, CV is the current value of the trust fund, and Y is the number of years remaining in the pay-in period.

(ii) If an owner or operator establishes a trust fund as specified in § 265.143(a) of this chapter, and the value of that trust fund is less than the current closure cost estimate when a permit is awarded for the facility, the amount of the current closure cost estimate still to be paid into the trust fund must be paid in over the pay-in period as defined in paragraph (a)(3) of this section. Payments must continue to be made no later than 30 days after each anniversary date of the first payment made pursuant to Part 265 of this chapter. The amount of each payment must be determined by this formula:

$$\text{Next payment} = \frac{CE - CV}{Y}$$

where CE is the current closure cost estimate, CV is the current value of the trust fund, and Y is the number of years remaining in the pay-in period.

(4) The owner or operator may accelerate payments into the trust fund or he may deposit the full amount of the current closure cost estimate at the time the fund is established. However, he must maintain the value of the fund at no less than the value that the fund would have if annual payments were made as specified in paragraph (a)(3) of this section.

(5) If the owner or operator establishes a closure trust fund after having used one or more alternate mechanisms specified in this section or in § 265.143 of this chapter, his first payment must be in at least the amount that the fund would contain if the trust fund were established initially and annual payments made according to specifications of this paragraph and § 265.143(a) of this chapter, as applicable.

(6) After the pay-in period is completed, whenever the current closure cost estimate changes, the owner or operator must compare the new estimate with the trustee's most recent annual valuation of the trust fund. If the value of the fund is less than the amount of the new estimate, the owner or operator, within 60 days after the change in the cost estimate, must either deposit an amount into the fund so that its value after this deposit at least equals the amount of the current closure cost estimate, or obtain other financial assurance as specified in this section to cover the difference.

(7) If the value of the trust fund is greater than the total amount of the current closure cost estimate, the owner or operator may submit a written request to the Regional Administrator for release of the amount in excess of the current closure cost estimate.

(8) If an owner or operator substitutes other financial assurance as specified in this section for all or part of the trust fund, he may submit a written request to the Regional Administrator for release of the amount in excess of the current closure cost estimate covered by the trust fund.

(9) Within 60 days after receiving a request from the owner or operator for release of funds as specified in paragraph (a) (7) or (8) of this section, the Regional Administrator will instruct the trustee to release to the owner or operator such funds as the Regional Administrator specifies in writing.

(10) After beginning partial or final closure, an owner or operator or another person authorized to conduct partial or final closure may request reimbursements for partial or final clo-

sure expenditures by submitting itemized bills to the Regional Administrator. The owner or operator may request reimbursements for partial closure only if sufficient funds are remaining in the trust fund to cover the maximum costs of closing the facility over its remaining operating life. Within 60 days after receiving bills for partial or final closure activities, the Regional Administrator will instruct the trustee to make reimbursements in those amounts as the Regional Administrator specifies in writing, if the Regional Administrator determines that the partial or final closure expenditures are in accordance with the approved closure plan, or otherwise justified. If the Regional Administrator has reason to believe that the maximum cost of closure over the remaining life of the facility will be significantly greater than the value of the trust fund, he may withhold reimbursements of such amounts as he deems prudent until he determines, in accordance with § 264.143(i) that the owner or operator is no longer required to maintain financial assurance for final closure of the facility. If the Regional Administrator does not instruct the trustee to make such reimbursements, he will provide the owner or operator with a detailed written statement of reasons.

(11) The Regional Administrator will agree to termination of the trust when:

(i) An owner or operator substitutes alternate financial assurance as specified in this section; or

(ii) The Regional Administrator releases the owner or operator from the requirements of this section in accordance with § 264.143(i).

(b) *Surety bond guaranteeing payment into a closure trust fund.* (1) An owner or operator may satisfy the requirements of this section by obtaining a surety bond which conforms to the requirements of this paragraph and submitting the bond to the Regional Administrator. An owner or operator of a new facility must submit the bond to the Regional Administrator at least 60 days before the date on which hazardous waste is first received for treatment, storage, or disposal. The bond must be effective before this initial receipt of hazardous waste. The surety company issuing the bond must, at a minimum, be among those listed as acceptable sureties on Federal bonds in Circular 570 of the U.S. Department of the Treasury.

(2) The wording of the surety bond must be identical to the wording specified in § 264.151(b).

(3) The owner or operator who uses a surety bond to satisfy the requirements of this section must also establish a standby trust fund. Under the terms of the bond, all payments made thereunder will be deposited by the surety directly into the standby trust fund in accordance with instructions from the Regional Administrator. This standby trust fund must meet the requirements specified in § 264.143(a), except that:

(i) An originally signed duplicate of the trust agreement must be submitted to the Regional Administrator with the surety bond; and

(ii) Until the standby trust fund is funded pursuant to the requirements of this section, the following are not required by these regulations:

(A) Payments into the trust fund as specified in § 264.143(a);

(B) Updating of Schedule A of the trust agreement (see § 264.151(a)) to show current closure cost estimates;

(C) Annual valuations as required by the trust agreement; and

(D) Notices of nonpayment as required by the trust agreement.

(4) The bond must guarantee that the owner or operator will:

(i) Fund the standby trust fund in an amount equal to the penal sum of the bond before the beginning of final closure of the facility; or

(ii) Fund the standby trust fund in an amount equal to the penal sum within 15 days after an administrative order to begin final closure issued by the Regional Administrator becomes final, or within 15 days after an order to begin final closure is issued by a U.S. district court or other court of competent jurisdiction; or

(iii) Provide alternate financial assurance as specified in this section, and obtain the Regional Administrator's written approval of the assurance provided, within 90 days after receipt by both the owner or operator and the Regional Administrator of a notice of cancellation of the bond from the surety.

(5) Under the terms of the bond, the surety will become liable on the bond obligation when the owner or operator fails to perf[illegible] as guaranteed by the bond.

(6) The penal sum of the bond must be in an amount at least equal to the current closure cost estimate, except as provided in § 264.143(g).

(7) Whenever the current closure cost estimate increases to an amount greater then the penal sum, the owner or operator, within 60 days after the increase, must either cause the penal sum to be increased to an amount at least equal to the current closure cost estimate and submit evidence of such increase to the Regional Administrator, or obtain other financial assurance as specified in this section to cover the increase. Whenever the current closure cost estimate decreases, the penal sum may be reduced to the amount of the current closure cost estimate following written approval by the Regional Administrator.

(8) Under the terms of the bond, the surety may cancel the bond by sending notice of cancellation by certified mail to the owner or operator and to the Regional Administrator. Cancellation may not occur, however, during the 120 days beginning on the date of receipt of the notice of cancellation by both the owner or operator and the Regional Administrator, as evidence by the return receipts.

(9) The owner or operator may cancel the bond if the Regional Administrator has given prior written consent based on his receipt of evidence of alternate financial assurance as specified in this section.

(c) *Surety bond guaranteeing performance of closure.* (1) An owner or operator may satisfy the requirements of this section by obtaining a surety bond which conforms to the requirements of this paragraph and submitting the bond to the Regional Administrator. An owner or operator of a new facility must submit the bond to the Regional Administrator at least 60 days before the date on which hazardous waste is first received for treatment, storage, or disposal. The bond must be effective before this initial receipt of hazardous waste. The surety company issuing the bond must, at a minimum, be among those listed as acceptable sureties on Federal bonds in Circular 570 of the U.S. Department of the Treasury.

(2) The wording of the surety bond must be identical to the wording specified in § 264.151(c).

(3) The owner or operator who uses a surety bond to satisfy the requirements of this section must also establish a standby trust fund. Under the terms of the bond, all payments made thereunder will be deposited by the surety directly into the standby trust fund in accordance with instructions from the Regional Administrator. This standby trust must meet the requirements specified in § 264.143(a), except that:

(i) An originally signed duplicate of the trust agreement must be submitted to the Regional Administrator with the surety bond; and

(ii) Unless the standby trust fund is funded pursuant to the requirements of this section, the following are not required by these regulations:

(A) Payments into the trust fund as specified in § 264.143(a);

(B) Updating of Schedule A of the trust agreement (see § 264.151(a)) to show current closure cost estimates;

(C) Annual valuations as required by the trust agreement; and

(D) Notices of nonpayment as required by the trust agreement.

(4) The bond must guarantee that the owner or operator will:

(i) Perform final closure in accordance with the closure plan and other requirements of the permit for the facility whenever required to do so; or

(ii) Provide alternate financial assurance as specified in this section, and obtain the Regional Administrator's written approval of the assurance provided, within 90 days after receipt by both the owner or operator and the Regional Administrator of a notice of cancellation of the bond from the surety.

(5) Under the terms of the bond, the surety will become liable on the bond obligation when the owner or operator fails to perform as guaranteed by the bond. Following a final administrative

determination pursuant to section 3008 of RCRA that the owner or operator has failed to perform final closure in accordance with the approved closure plan and other permit requirements when required to do so, under the terms of the bond the surety will perform final closure as guaranteed by the bond or will deposit the amount of the penal sum into the standby trust fund.

(6) The penal sum of the bond must be in an amount at least equal to the current closure cost estimate.

(7) Whenever the current closure cost estimate increases to an amount greater than the penal sum, the owner or operator, within 60 days after the increase, must either cause the penal sum to be increased to an amount at least equal to the current closure cost estimate and submit evidence of such increase to the Regional Administrator, or obtain other financial assurance as specified in this section. Whenever the current closure cost estimate decreases, the penal sum may be reduced to the amount of the current closure cost estimate following written approval by the Regional Administrator.

(8) Under the terms of the bond, the surety may canel the bond by sending notice of cancellation by certified mail to the owner or operator and to the Regional Administrator. Cancellation may not occur, however, during the 120 days beginning on the date of receipt of the notice of cancellation by both the owner or operator and the Regional Administrator, as evidenced by the return receipts.

(9) The owner or operator may cancel the bond if the Regional Administrator has given prior written consent. The Regional Administrator will provide such written consent when:

(i) An owner or operator substitutes alternate financial assurance as specified in this section; or

(ii) The Regional Administrator releases the owner or operator from the requirements of this section in accordance with § 264.143(i).

(10) The surety will not be liable for deficiencies in the performance of closure by the owner or operator after the Regional Administrator releases the owner or operator from the requirements of this section in accordance with § 264.143(i).

(d) *Closure letter of credit.* (1) An owner or operator may satisfy the requirements of this section by obtaining an irrevocable standby letter of credit which conforms to the requirements of this paragraph and submitting the letter to the Regional Administrator. An owner or operator of a new facility must submit the letter of credit to the Regional Administrator at least 60 days before the date on which hazardous waste is first received for treatment, storage, or disposal. The letter of credit must be effective before this initial receipt of hazardous waste. The issuing institution must be an entity which has the authority to issue letters of credit and whose letter-of-credit operations are regulated and examined by a Federal or State agency.

(2) The wording of the letter of credit must be identical to the wording specified in § 264.151(d).

(3) An owner or operator who uses a letter of credit to satisfy the requirements of this section must also establish a standby trust fund. Under the terms of the letter of credit, all amounts paid pursuant to a draft by the Regional Administrator will be deposited by the issuing institution directly into the standby trust fund in accordance with instructions from the Regional Administrator. This standby trust fund must meet the requirements of the trust fund specified in § 264.143(a), except that:

(i) An originally signed duplicate of the trust agreement must be submitted to the Regional Administrator with the letter of credit; and

(ii) Unless the standby trust fund is funded pursuant to the requirements of this section, the following are not required by these regulations:

(A) Payments into the trust fund as specified in § 264.143(a);

(B) Updating of Schedule A of the trust agreement (see § 264.151(a)) to show current closure cost estimates;

(C) Annual valuations as required by the trust agreement; and

(D) Notices of nonpayment as required by the trust agreement.

(4) The letter of credit must be accompanied by a letter from the owner or operator referring to the letter of credit by number, issuing institution, and date, and providing the following information: the EPA Identification Number, name, and address of the facility, and the amount of funds assured for closure of the facility by the letter of credit.

(5) The letter of credit must be irrevocable and issued for a period of at least 1 year. The letter of credit must provide that the expiration date will be automatically extended for a period of at least 1 year unless, at least 120 days before the current expiration date, the issuing institution notifies both the owner or operator and the Regional Administrator by certified mail of a decision not to extend the expiration date. Under the terms of the letter of credit, the 120 days will begin on the date when both the owner or operator and the Regional Administrator have received the notice, as evidenced by the return receipts.

(6) The letter of credit must be issued in an amount at least equal to the current closure cost estimate, except as provided in § 264.143(g).

(7) Whenever the current closure cost estimate increases to an amount greater than the amount of the credit, the owner or operator, within 60 days after the increase, must either cause the amount of the credit to be increased so that it at least equals the current closure cost estimate and submit evidence of such increase to the Regional Administrator, or obtain other financial assurance as specified in this section to cover the increase. Whenever the current closure cost estimate decreases, the amount of the credit may be reduced to the amount of the current closure cost estimate following written approval by the Regional Administrator.

(8) Following a final administrative determination pursuant to section 3008 of RCRA that the owner or operator has failed to perform final closure in accordance with the closure plan and other permit requirements when required to do so, the Regional Administrator may draw on the letter of credit.

(9) If the owner or operator does no establish alternate financial assuranc as specified in this section and obtai written approval of such alternate assurance from the Regional Administrator within 90 days after receipt by both the owner or operator and the Regional Administrator of a notice from issuing institution that it has decided not to extend the letter of credit beyond the current expiration date, the Regional Administrator will draw on the letter of credit. The Regiona Administrator may delay the drawin if the issuing institution grants an extension of the term of the credit During the last 30 days of any such extension the Regional Administrator will draw on the letter of credit if the owner or operator has failed to provide alternate financial assurance as specified in this section and obtain written approval of such assurance from the Regional Administrator.

(10) The Regional Administrator will return the letter of credit to the issuing institution for termination when:

(i) An owner or operator substitutes alternate financial assurance as specified in this section; or

(ii) The Regional Administrator releases the owner or operator from the requirements of this section in accordance with § 264.143(i).

(e) *Closure insurance.* (1) An owner or operator may satisfy the requirements of this section by obtaining closure insurance which conforms to the requirements of this paragraph and submitting a certificate of such insurance to the Regional Administrator. An owner or operator of a new facility must submit the certificate of insurance to the Regional Administrator at least 60 days before the date on which hazardous waste is first received for treatment, storage, or disposal. The insurance must be effective before this initial receipt of hazardous waste. At a minimum, the insurer must be licensed to transact the business of insurance, or eligible to provide insurance as an excess or suplus lines insurer, in one or more States.

(2) The wording of the certificate of insurance must be identical to the wording specified in § 264.151(e).

(3) The closure insurance policy must be issued for a face amount at

sure expenditures by submitting itemized bills to the Regional Administrator. The owner or operator may request reimbursements for partial closure only if sufficient funds are remaining in the trust fund to cover the maximum costs of closing the facility over its remaining operating life. Within 60 days after receiving bills for partial or final closure activities, the Regional Administrator will instruct the trustee to make reimbursements in those amounts as the Regional Administrator specifies in writing, if the Regional Administrator determines that the partial or final closure expenditures are in accordance with the approved closure plan, or otherwise justified. If the Regional Administrator has reason to believe that the maximum cost of closure over the remaining life of the facility will be significantly greater than the value of the trust fund, he may withhold reimbursements of such amounts as he deems prudent until he determines, in accordance with § 264.143(i) that the owner or operator is no longer required to maintain financial assurance for final closure of the facility. If the Regional Administrator does not instruct the trustee to make such reimbursements, he will provide the owner or operator with a detailed written statement of reasons.

(11) The Regional Administrator will agree to termination of the trust when:

(i) An owner or operator substitutes alternate financial assurance as specified in this section; or

(ii) The Regional Administrator releases the owner or operator from the requirements of this section in accordance with § 264.143(i).

(b) *Surety bond guaranteeing payment into a closure trust fund.* (1) An owner or operator may satisfy the requirements of this section by obtaining a surety bond which conforms to the requirements of this paragraph and submitting the bond to the Regional Administrator. An owner or operator of a new facility must submit the bond to the Regional Administrator at least 60 days before the date on which hazardous waste is first received for treatment, storage, or disposal. The bond must be effective before this initial receipt of hazardous waste. The surety company issuing the bond must, at a minimum, be among those listed as acceptable sureties on Federal bonds in Circular 570 of the U.S. Department of the Treasury.

(2) The wording of the surety bond must be identical to the wording specified in § 264.151(b).

(3) The owner or operator who uses a surety bond to satisfy the requirements of this section must also establish a standby trust fund. Under the terms of the bond, all payments made thereunder will be deposited by the surety directly into the standby trust fund in accordance with instructions from the Regional Administrator. This standby trust fund must meet the requirements specified in § 264.143(a), except that:

(i) An originally signed duplicate of the trust agreement must be submitted to the Regional Administrator with the surety bond; and

(ii) Until the standby trust fund is funded pursuant to the requirements of this section, the following are not required by these regulations:

(A) Payments into the trust fund as specified in § 264.143(a);

(B) Updating of Schedule A of the trust agreement (see § 264.151(a)) to show current closure cost estimates;

(C) Annual valuations as required by the trust agreement; and

(D) Notices of nonpayment as required by the trust agreement.

(4) The bond must guarantee that the owner or operator will:

(i) Fund the standby trust fund in an amount equal to the penal sum of the bond before the beginning of final closure of the facility; or

(ii) Fund the standby trust fund in an amount equal to the penal sum within 15 days after an administrative order to begin final closure issued by the Regional Administrator becomes final, or within 15 days after an order to begin final closure is issued by a U.S. district court or other court of competent jurisdiction; or

(iii) Provide alternate financial assurance as specified in this section, and obtain the Regional Administrator's written approval of the assurance provided, within 90 days after receipt by both the owner or operator and the Regional Administrator of a notice of cancellation of the bond from the surety.

(5) Under the terms of the bond, the surety will become liable on the bond obligation when the owner or operator fails to perform as guaranteed by the bond.

(6) The penal sum of the bond must be in an amount at least equal to the current closure cost estimate, except as provided in § 264.143(g).

(7) Whenever the current closure cost estimate increases to an amount greater then the penal sum, the owner or operator, within 60 days after the increase, must either cause the penal sum to be increased to an amount at least equal to the current closure cost estimate and submit evidence of such increase to the Regional Administrator, or obtain other financial assurance as specified in this section to cover the increase. Whenever the current closure cost estimate decreases, the penal sum may be reduced to the amount of the current closure cost estimate following written approval by the Regional Administrator.

(8) Under the terms of the bond, the surety may cancel the bond by sending notice of cancellation by certified mail to the owner or operator and to the Regional Administrator. Cancellation may not occur, however, during the 120 days beginning on the date of receipt of the notice of cancellation by both the owner or operator and the Regional Administrator, as evidence by the return receipts.

(9) The owner or operator may cancel the bond if the Regional Administrator has given prior written consent based on his receipt of evidence of alternate financial assurance as specified in this section.

(c) *Surety bond guaranteeing performance of closure.* (1) An owner or operator may satisfy the requirements of this section by obtaining a surety bond which conforms to the requirements of this paragraph and submitting the bond to the Regional Administrator. An owner or operator of a new facility must submit the bond to the Regional Administrator at least 60 days before the date on which hazardous waste is first received for treatment, storage, or disposal. The bond must be effective before this initial receipt of hazardous waste. The surety company issuing the bond must, at a minimum, be among those listed as acceptable sureties on Federal bonds in Circular 570 of the U.S. Department of the Treasury.

(2) The wording of the surety bond must be identical to the wording specified in § 264.151(c).

(3) The owner or operator who uses a surety bond to satisfy the requirements of this section must also establish a standby trust fund. Under the terms of the bond, all payments made thereunder will be deposited by the surety directly into the standby trust fund in accordance with instructions from the Regional Administrator. This standby trust must meet the requirements specified in § 264.143(a), except that:

(i) An originally signed duplicate of the trust agreement must be submitted to the Regional Administrator with the surety bond; and

(ii) Unless the standby trust fund is funded pursuant to the requirements of this section, the following are not required by these regulations:

(A) Payments into the trust fund as specified in § 264.143(a);

(B) Updating of Schedule A of the trust agreement (see § 264.151(a)) to show current closure cost estimates;

(C) Annual valuations as required by the trust agreement; and

(D) Notices of nonpayment as required by the trust agreement.

(4) The bond must guarantee that the owner or operator will:

(i) Perform final closure in accordance with the closure plan and other requirements of the permit for the facility whenever required to do so; or

(ii) Provide alternate financial assurance as specified in this section, and obtain the Regional Administrator's written approval of the assurance provided, within 90 days after receipt by both the owner or operator and the Regional Administrator of a notice of cancellation of the bond from the surety.

(5) Under the terms of the bond, the surety will become liable on the bond obligation when the owner or operator fails to perform as guaranteed by the bond. Following a final administrative

(A) He has compared the data which the letter from the chief financial officer specifies as having been derived from the independently audited, year-end financial statements for the latest fiscal year with the amounts in such financial statements; and

(B) In connection with that procedure, no matters came to his attention which caused him to believe that the specified data should be adjusted.

(4) An owner or operator of a new facility must submit the items specified in paragraph (f)(3) of this section to the Regional Administrator at least 60 days before the date on which hazardous waste is first received for treatment, storage, or disposal.

(5) After the initial submission of items specified in paragraph (f)(3) of this section, the owner or operator must send updated information to the Regional Administrator within 90 days after the close of each succeeding fiscal year. This information must consist of all three items specified in paragraph (f)(3) of this section.

(6) If the owner or operator no longer meets the requirements of paragraph (f)(1) of this section, he must send notice to the Regional Administrator of intent to establish alternate financial assurance as specified in this section. The notice must be sent by certified mail within 90 days after the end of the fiscal year for which the year-end financial data show that the owner or operator no longer meets the requirements. The owner or operator must provide the alternate financial assurance within 120 days after the end of such fiscal year.

(7) The Regional Administrator may, based on a reasonable belief that the owner or operator may no longer meet the requirements of paragraph (f)(1) of this section, require reports of financial condition at any time from the owner or operator in addition to those specified in paragraph (f)(3) of this section. If the Regional Administrator finds, on the basis of such reports or other information, that the owner or operator no longer meets the requirements of paragraph (f)(1) of this section, the owner or operator must provide alternate financial assurance as specified in this section within 30 days after notification of such a finding.

(8) The Regional Administrator may disallow use of this test on the basis of qualifications in the opinion expressed by the independent certified public accountant in his report on examination of the owner's or operator's financial statements (see paragraph (f)(3)(ii) of this section). An adverse opinion or a disclaimer of opinion will be cause for disallowance. The Regional Administrator will evaluate other qualifications on an individual basis. The owner or operator must provide alternate financial assurance as specified in this section within 30 days after notification of the disallowance.

(9) The owner or operator is no longer required to submit the items specified in paragraph (f)(3) of this section when:

(i) An owner or operator substitutes alternate financial assurance as specified in this section; or

(ii) The Regional Administrator releases the owner or operator from the requirements of this section in accordance with § 264.143(i).

(10) An owner or operator may meet the requirements of this section by obtaining a written guarantee, hereafter referred to as "corporate guarantee." The guarantor must be the parent corporation of the owner or operator. The guarantor must meet the requirements for owners or operators in paragraphs (f)(1) through (8) of this section and must comply with the terms of the corporate guarantee. The wording of the corporate guarantee must be identical to the wording specified in § 264.151(h). The corporate guarantee must accompany the items sent to the Regional Administrator as specified in paragraph (f)(3) of this section. The terms of the corporate guarantee must provide that:

(i) If the owner or operator fails to perform final closure of a facility covered by the corporate guarantee in accordance with the closure plan and other permit requirements whenever required to do so, the guarantor will do so or establish a trust fund as specified in § 264.143(a) in the name of the owner or operator.

(ii) The corporate guarantee will remain in force unless the guarantor sends notice of cancellation by certified mail to the owner or operator and to the Regional Administrator. Cancellation may not occur, however, during the 120 days beginning on the date of receipt of the notice of cancellation by both the owner or operator and the Regional Administrator, as evidenced by the return receipts.

(iii) If the owner or operator fails to provide alternate financial assurance as specified in this section and obtain the written approval of such alternate assurance from the Regional Administrator within 90 days after receipt by both the owner or operator and the Regional Administrator of a notice of cancellation of the corporate guarantee from the guarantor, the guarantor will provide such alternative financial assurance in the name of the owner or operator.

(g) *Use of multiple financial mechanisms.* An owner or operator may satisfy the requirements of this section by establishing more than one financial mechanism per facility. These mechanisms are limited to trust funds, surety bonds guaranteeing payment into a trust fund, letters of credit, and insurance. The mechanisms must be as specified in paragraphs (a), (b), (d), and (e), respectively, of this section, except that it is the combination of mechanisms, rather than the single mechanism, which must provide financial assurance for an amount at least equal to the current closure cost estimate. If an owner or operator uses a trust fund in combination with a surety bond or a letter of credit, he may use the trust fund as the standby trust fund for the other mechanisms. A single standby trust fund may be established for two or more mechanisms. The Regional Administrator may use any or all of the mechanisms to provide for closure of the facility.

(h) *Use of a financial mechanism for multiple facilities.* An owner or operator may use a financial assurance mechanism specified in this section to meet the requirements of this section for more than one facility. Evidence of financial assurance submitted to the Regional Administrator must include a list showing, for each facility, the EPA Identification Number, name, address, and the amount of funds for closure assured by the mechanism. If the facilities covered by the mechanism are in more than one Region, identical evidence of financial assurance must be submitted to and maintained with the Regional Administrators of all such Regions. The amount of funds available through the mechanism must be no less than the sum of funds that would be available if a separate mechanism had been established and maintained for each facility. In directing funds available through the mechanism for closure of any of the facilities covered by the mechanism, the Regional Administrator may direct only the amount of funds designated for that facility, unless the owner or operator agrees to the use of additional funds available under the mechanism.

(i) *Release of the owner or operator from the requirements of this section.* Within 60 days after receiving certifications from the owner or operator and an independent registered professional engineer that final closure has been completed in accordance with the approved closure plan, the Regional Administrator will notify the owner or operator in writing that he is no longer required by this section to maintain financial assurance for final closure of the facility, unless the Regional Administrator has reason to believe that final closure has not been in accordance with the approved closure plan. The Regional Administrator shall provide the owner or operator a detailed written statement of any such reason to believe that closure has not been in accordance with the approved closure plan.

[47 FR 15047, Apr. 7, 1982, as amended at 51 FR 16448, May 2, 1986]

§ 264.144 Cost estimate for post-closure care.

(a) The owner or operator of a disposal surface impoundment, disposal miscellaneous unit, land treatment unit, or landfill unit, or of a surface impoundment or waste pile required under §§ 264.228 and 264.258 to prepare a contingent closure and post-closure plan, must have a detailed written estimate, in current dollars, of the annual cost of post-closure monitoring and maintenance of the facility in ac-

least equal to the current closure cost estimate, except as provided in § 264.143(g). The term "face amount" means the total amount the insurer is obligated to pay under the policy. Actual payments by the insurer will not change the face amount, although the insurer's future liability will be lowered by the amount of the payments.

(4) The closure insurance policy must guarantee that funds will be available to close the facility whenever final closure occurs. The policy must also guarantee that once final closure begins, the insurer will be responsible for paying out funds, up to an amount equal to the face amount of the policy, upon the direction of the Regional Administrator, to such party or parties as the Regional Administrator specifies.

(5) After beginning partial or final closure, an owner or operator or any other person authorized to conduct closure may request reimbursements for closure expenditures by submitting itemized bills to the Regional Administrator. The owner or operator may request reimbursements for partial closure only if the remaining value of the policy is sufficient to cover the maximum costs of closing the facility over its remaining operating life. Within 60 days after receiving bills for closure activities, the Regional Administrator will instruct the insurer to make reimbursements in such amounts as the Regional Administrator specifies in writing, if the Regional Administrator determines that the partial or final closure expenditures are in accordance with the approved closure plan or otherwise justified. If the Regional Administrator has reason to believe that the maximum cost of closure over the remaining life of the facility will be signficantly greater than the face amount of the policy, he may withhold reimbursements of such amounts as he deems prudent until he determines, in accordance with § 264.143(i), that the owner or operator is no longer required to maintain financial assurance for final closure of the facility. If the Regional Administrator does not instruct the insurer to make such reimbursements, he will provide the owner or operator with a detailed written statement of reasons.

(6) The owner or operator must maintain the policy in full force and effect until the Regional Administrator consents to termination of the policy by the owner or operator as specified in paragraph (e)(10) of this section. Failure to pay the premium, without substitution of alternate financial assurance as specified in this section, will constitute a significant violation of these regulations, warranting such remedy as the Regional Administrator deems necessary. Such violation will be deemed to begin upon receipt by the Regional Adminstrator of a notice of future cancellation, termination, or failure to renew due to nonpayment of the premium, rather than upon the date of expiration.

(7) Each policy must contain a provision allowing assignment of the policy to a successor owner or operator. Such assignment may be conditional upon consent of the insurer, provided such consent is not unreasonably refused.

(8) The policy must provide that the insurer may not cancel, terminate, or fail to renew the policy except for failure to pay the premium. The automatic renewal of the policy must, at a minimum, provide the insured with the option of renewal at the face amount of the expiring policy. If there is a failure to pay the premium, the insurer may elect to cancel, terminate, or fail to renew the policy by sending notice by certified mail to the owner or operator and the Regional Administrator. Cancellation, termination, or failure to renew may not occur, however, during the 120 days beginning with the date of receipt of the notice by both the Regional Administrator and the owner or operator, as evidenced by the return receipts. Cancellation, termination, or failure to renew may not occur and the policy will remain in full force and effect in the event that on or before the date of expiration:

(i) The Regional Administrator deems the facility abandoned; or

(ii) The permit is terminated or revoked or a new permit is denied; or

(iii) Closure is ordered by the Regional Administrator or a U.S. district court or other court of competent jurisdiction; or

(iv) The owner or operator is named as debtor in a voluntary or involuntary proceeding under Title 11 (Bankruptcy), U.S. Code; or

(v) The premium due is paid.

(9) Whenever the current closure cost estimate increases to an amount greater than the face amount of the policy, the owner or operator, within 60 days after the increase, must either cause the face amount to be increased to an amount at least equal to the current closure cost estimate and submit evidence of such increase to the Regional Administrator, or obtain other financial assurance as specified in this section to cover the increase. Whenever the current closure cost estimate decreases, the face amount may be reduced to the amount of the current closure cost estimate following written approval by the Regional Administrator.

(10) The Regional Administrator will give written consent to the owner or operator that he may terminate the insurance policy when:

(i) An owner or operator substitutes alternate financial assurance as specified in this section; or

(ii) The Regional Administrator releases the owner or operator from the requirements of this section in accordance with § 264.143(i).

(f) *Financial test and corporate guarantee for closure.* (1) An owner or operator may satisfy the requirements of this section by demonstrating that he passes a financial test as specified in this paragraph. To pass this test the owner or operator must meet the criteria of either paragraph (f)(1)(i) or (ii) of this section:

(i) The owner or operator must have:

(A) Two of the following three ratios: a ratio of total liabilities to net worth less than 2.0; a ratio of the sum of net income plus depreciation, depletion, and amortization to total liabilities greater than 0.1; and a ratio of current assets to current liabilities greater than 1.5; and

(B) Net working capital and tangible net worth each at least six times the sum of the current closure and post-closure cost estimates and the current plugging and abandonment cost estimates; and

(C) Tangible net worth of at least $10 million; and

(D) Assets located in the United States amounting to at least 90 percent of total assets or at least six times the sum of the current closure and post-closure cost estimates and the current plugging and abandonment cost estimates.

(ii) The owner or operator must have:

(A) A current rating for his most recent bond issuance of AAA, AA, A, or BBB as issued by Standard and Poor's or Aaa, Aa, A, or Baa as issued by Moody's; and

(B) Tangible net worth at least six times the sum of the current closure and post-closure cost estimates and the current plugging and abandonment cost estimates; and

(C) Tangible net worth of at least $10 million; and

(D) Assets located in the United States amounting to at least 90 percent of total assets or at least six times the sum of the current closure and post-closure cost estimates and the current plugging and abandonment cost estimates.

(2) The phrase "current closure and post-closure cost estimates" as used in paragraph (f)(1) of this section refers to the cost estimates required to be shown in paragraphs 1-4 of the letter from the owner's or operator's chief financial officer (§ 264.151(f)). The phrase "current plugging and abandonment cost estimates" as used in paragraph (f)(1) of this section refers to the cost estimates required to be shown in paragraphs 1-4 of the letter from the owner's or operator's chief financial officer (§ 144.70(f) of this title).

(3) To demonstrate that he meets this test, the owner or operator must submit the following items to the Regional Administrator:

(i) A letter signed by the owner's or operator's chief financial officer and worded as specified in § 264.151(f); and

(ii) A copy of the independent certified public accountant's report on examination of the owner's or operator's financial statements for the latest completed fiscal year; and

(iii) A special report from the owner's or operator's independent certified public accountant to the owner or operator stating

written request to the Regional Administrator for release of the amount in excess of the current post-closure cost estimate.

(8) If an owner or operator substitutes other financial assurance as specified in this section for all or part of the trust fund, he may submit a written request to the Regional Administrator for release of the amount in excess of the current post-closure cost estimate covered by the trust fund.

(9) Within 60 days after receiving a request from the owner or operator for release of funds as specified in paragraph (a)(7) or (8) of this section, the Regional Administrator will instruct the trustee to release to the owner or operator such funds as the Regional Administrator specifies in writing.

(10) During the period of post-closure care, the Regional Administrator may approve a release of funds if the owner or operator demonstrates to the Regional Administrator that the value of the trust fund exceeds the remaining cost of post-closure care.

(11) An owner or operator or any other person authorized to conduct post-closure care may request reimbursements for post-closure care expenditures by submitting itemized bills to the Regional Administrator. Within 60 days after receiving bills for post-closure care activities, the Regional Administrator will instruct the trustee to make reimbursements in those amounts as the Regional Administrator specifies in writing, if the Regional Administrator determines that the post-closure care expenditures are in accordance with the approved post-closure plan or otherwise justified. If the Regional Administrator does not instruct the trustee to make such reimbursements, he will provide the owner or operator with a detailed written statement of reasons.

(12) The Regional Administrator will agree to termination of the trust when:

(i) An owner or operator substitutes alternate financial assurance as specified in this section; or

(ii) The Regional Administrator releases the owner or operator from the requirements of this section in accordance with § 264.145(i).

(b) *Surety bond guaranteeing payment into a post-closure trust fund.* (1) An owner or operator may satisfy the requirements of this section by obtaining a surety bond which conforms to the requirements of this paragraph and submitting the bond to the Regional Administrator. An owner or operator of a new facility must submit the bond to the Regional Administrator at least 60 days before the date on which hazardous waste is first received for disposal. The bond must be effective before this initial receipt of hazardous waste. The surety company issuing the bond must, at a minimum, be among those listed as acceptable sureties on Federal bonds in Circular 570 of the U.S. Department of the Treasury.

(2) The wording of the surety bond must be identical to the wording specified in § 264.151(b).

(3) The owner or operator who uses a surety bond to satisfy the requirements of this section must also establish a standby trust fund. Under the terms of the bond, all payments made thereunder will be deposited by the surety directly into the standby trust fund in accordance with instructions from the Regional Administrator. This standby trust fund must meet the requirements specified in § 264.145(a), except that:

(i) An originally signed duplicate of the trust agreement must be submitted to the Regional Administrator with the surety bond; and

(ii) Until the standby trust fund is funded pursuant to the requirements of this section, the following are not required by these regulations:

(A) Payments into the trust fund as specified in § 264.145(a);

(B) Updating of Schedule A of the trust agreement (see § 264.151(a)) to show current post-closure cost estimates;

(C) Annual valuations as required by the trust agreement; and

(D) Notices of nonpayment as required by the trust agreement.

(4) The bond must guarantee that the owner or operator will:

(i) Fund the standby trust fund in an amount equal to the penal sum of the bond before the beginning of final closure of the facility; or

(ii) Fund the standby trust fund in an amount equal to the penal sum within 15 days after an administrative order to begin final closure issued by the Regional Administrator becomes final, or within 15 days after an order to begin final closure is issued by a U.S. district court or other court of competent jurisdiction; or

(iii) Provide alternate financial assurance as specified in this section, and obtain the Regional Administrator's written approval of the assurance provided, within 90 days after receipt by both the owner or operator and the Regional Administrator of a notice of cancellation of the bond from the surety.

(5) Under the terms of the bond, the surety will become liable on the bond obligation when the owner or operator fails to perform as guaranteed by the bond.

(6) The penal sum of the bond must be in an amount at least equal to the current post-closure cost estimate, except as provided in § 264.145(g).

(7) Whenever the current post-closure cost estimate increases to an amount greater than the penal sum, the owner or operator, within 60 days after the increase, must either cause the penal sum to be increased to an amount at least equal to the current post-closure cost estimate and submit evidence of such increase to the Regional Administrator, or obtain other financial assurance as specified in this section to cover the increase. Whenever the current post-closure cost estimate decreases, the penal sum may be reduced to the amount of the current post-closure cost estimate following written approval by the Regional Administrator.

(8) Under the terms of the bond, the surety may cancel the bond by sending notice of cancellation by certified mail to the owner or operator and to the Regional Administrator. Cancellation may not occur, however, during the 120 days beginning on the date of receipt of the notice of cancellation by both the owner or operator and the Regional Administrator, as evidenced by the return receipts.

(9) The owner or operator may cancel the bond if the Regional Administrator has given prior written consent based on his receipt of evidence of alternate financial assurance as specified in this section.

(c) *Surety bond guaranteeing performance of post-closure care.* (1) An owner or operator may satisfy the requirements of this section by obtaining a surety bond which conforms to the requirements of this paragraph and submitting the bond to the Regional Administrator. An owner or operator of a new facility must submit the bond to the Regional Administrator at least 60 days before the date on which hazardous waste is first received for disposal. The bond must be effective before this initial receipt of hazardous waste. The surety company issuing the bond must, at a minimum, be among those listed as acceptable sureties on Federal bonds in Circular 570 of the U.S. Department of the Treasury.

(2) The wording of the surety bond must be identical to the wording specified in § 264.151(c).

(3) The owner or operator who uses a surety bond to satisfy the requirements of this section must also establish a standby trust fund. Under the terms of the bond, all payments made thereunder will be deposited by the surety directly into the standby trust fund in accordance with instructions from the Regional Administrator. This standby trust fund must meet the requirements specified in § 264.145(a), except that:

(i) An originally signed duplicate of the trust agreement must be submitted to the Regional Administrator with the surety bond; and

(ii) Unless the standby trust fund is funded pursuant to the requirements of this section, the following are not required by these regulations:

(A) Payments into the trust fund as specified in § 264.145(a);

(B) Updating of Schedule A of the trust agreement (see § 264.151(a)) to show current post-closure cost estimates;

(C) Annual valuations as required by the trust agreement; and

(D) Notices of nonpayment as required by the trust agreement.

cordance with the applicable post-closure regulations in §§ 264.117 through 264.120, 264.228, 264.258, 264.280, 264.310, and 264.603.

(1) The post-closure cost estimate must be based on the costs to the owner or operator of hiring a third party to conduct post-closure care activities. A third party is a party who is neither a parent nor a subsidiary of the owner or operator. (See definition of parent corporation in § 264.141(d).)

(2) The post-closure cost estimate is calculated by multiplying the annual post-closure cost estimate by the number of years of post-closure care required under § 264.117.

(b) During the active life of the facility, the owner or operator must adjust the post-closure cost estimate for inflation within 60 days prior to the anniversary date of the establishment of the financial instrument(s) used to comply with § 264.145. For owners or operators using the financial test or corporate guarantee, the post-closure cost estimate must be updated for inflation within 30 days after the close of the firm's fiscal year and before the submission of updated information to the Regional Administrator as specified in § 264.145(f)(5). The adjustment may be made by recalculating the post-closure cost estimate in current dollars or by using an inflation factor derived from the most recent Implicit Price Deflator for Gross National Product published by the U.S. Department of Commerce in its *Survey of Current Business* as specified in § 264.145(b)(1) and (2). The inflation factor is the result of dividing the latest published annual Deflator by the Deflator for the previous year.

(1) The first adjustment is made by multiplying the post-closure cost estimate by the inflation factor. The result is the adjusted post-closure cost estimate.

(2) Subsequent adjustments are made by multiplying the latest adjusted post-closure cost estimate by the latest inflation factor.

(c) During the active life of the facility, the owner or operator must revise the post-closure cost estimate within 30 days after the Regional Administrator has approved the request to modify the post-closure plan, if the change in the post-closure plan increases the cost of post-closure care. The revised post-closure cost estimate must be adjusted for inflation as specified in § 264.144(b).

(d) The owner or operator must keep the following at the facility during the operating life of the facility: The latest post-closure cost estimate prepared in accordance with § 264.144 (a) and (c) and, when this estimate has been adjusted in accordance with § 264.144(b), the latest adjusted post-closure cost estimate.

(Approved by the Office of Management and Budget under control number 2050-0036)

[47 FR 15047, Apr. 7, 1982, as amended at 47 FR 32357, July 26, 1982; 50 FR 4514, Jan. 31, 1985; 51 FR 16449, May 2, 1986; 52 FR 46964, Dec. 10, 1987]

§ 264.145 Financial assurance for post-closure care.

The owner or operator of a hazardous waste management unit subject to the requirements of § 264.144 must establish financial assurance for post-closure care in accordance with the approved post-closure plan for the facility 60 days prior to the initial receipt of hazardous waste or the effective date of the regulation, whichever is later. He must choose from the following options:

(a) *Post-closure trust fund.* (1) An owner or operator may satisfy the requirements of this section by establishing a post-closure trust fund which conforms to the requirements of this paragraph and submitting an originally signed duplicate of the trust agreement to the Regional Administrator. An owner or operator of a new facility must submit the originally signed duplicate of the trust agreement to the Regional Administrator at least 60 days before the date on which hazardous waste is first received for disposal. The trustee must be an entity which has the authority to act as a trustee and whose trust operations are regulated and examined by a Federal or State agency.

(2) The wording of the trust agreement must be identical to the wording specified in § 264.151(a)(1), and the trust agreement must be accompanied

by a formal certification of acknowledgment (for example, see § 264.151(a)(2)). Schedule A of the trust agreement must be updated within 60 days after a change in the amount of the current post-closure cost estimate covered by the agreement.

(3) Payments into the trust fund must be made annually by the owner or operator over the term of the initial RCRA permit or over the remaining operating life of the facility as estimated in the closure plan, whichever period is shorter; this period is hereafter referred to as the "pay-in period." The payments into the post-closure trust fund must be made as follows:

(i) For a new facility, the first payment must be made before the initial receipt of hazardous waste for disposal. A receipt from the trustee for this payment must be submitted by the owner or operator to the Regional Administrator before this initial receipt of hazardous waste. The first payment must be at least equal to the current post-closure cost estimate, except as provided in § 264.145(g), divided by the number of years in the pay-in period. Subsequent payments must be made no later than 30 days after each anniversay date of the first payment. The amount of each subsequent payment must be determined by this formula:

$$\text{Next payment} = \frac{CE - CV}{Y}$$

where CE is the current post-closure cost estimate, CV is the current value of the trust fund, and Y is the number of years remaining in the pay-in period.

(ii) If an owner or operator establishes a trust fund as specified in § 265.145(a) of this chapter, and the value of that trust fund is less than the current post-closure cost estimate when a permit is awarded for the facility, the amount of the current post-closure cost estimate still to be paid into the fund must be paid in over the pay-in period as defined in paragraph (a)(3) of this section. Payments must continue to be made no later than 30 days after each anniversary date of the first payment made pursuant to Part 265 of this chapter. The amount of each payment must be determined by this formula:

$$\text{Next payment} = \frac{CE - CV}{Y}$$

where CE is the current post-closure cost estimate, CV is the current value of the trust fund, and Y is the number of years remaining in the pay-in period.

(4) The owner or operator may accelerate payments into the trust fund or he may deposit the full amount of the current post-closure cost estimate at the time the fund is established. However, he must maintain the value of the fund at no less than the value that the fund would have if annual payments were made as specified in paragraph (a)(3) of this section.

(5) If the owner or operator establishes a post-closure trust fund after having used one or more alternate mechanisms specified in this section or in § 265.145 of this chapter, his first payment must be in at least the amount that the fund would contain if the trust fund were established initially and annual payments made according to specifications of this paragraph and § 265.145(a) of this chapter, as applicable.

(6) After the pay-in period is completed, whenever the current post-closure cost estimate changes during the operating life of the facility, the owner or operator must compare the new estimate with the trustee's most recent annual valuation of the trust fund. If the value of the fund is less than the amount of the new estimate, the owner or operator, within 60 days after the change in the cost estimate, must either deposit an amount into the fund so that its value after this deposit at least equals the amount of the current post-closure cost estimate, or obtain other financial assurance as specified in this section to cover the difference.

(7) During the operating life of the facility, if the value of the trust fund is greater than the total amount of the current post-closure cost estimate, the owner or operator may submit a

failed to provide alternate financial assurance as specified in this section and obtain written approval of such assurance from the Regional Administrator.

(11) The Regional Administrator will return the letter of credit to the issuing institution for termination when:

(i) An owner or operator substitutes alternate financial assurance as specified in this section; or

(ii) The Regional Administrator releases the owner or operator from the requirements of this section in accordance with § 264.145(i).

(e) *Post-closure insurance.* (1) An owner or operator may satisfy the requirements of this section by obtaining post-closure insurance which conforms to the requirements of this paragraph and submitting a certificate of such insurance to the Regional Administrator. An owner or operator of a new facility must submit the certificate of insurance to the Regional Administrator at least 60 days before the date on which hazardous waste is first received for disposal. The insurance must be effective before this initial receipt of hazardous waste. At a minimum, the insurer must be licensed to transact the business of insurance, or eligible to provide insurance as an excess or surplus lines insurer, in one or more States.

(2) The wording of the certificate of insurance must be identical to the wording specified in § 264.151(e).

(3) The post-closure insurance policy must be issued for a face amount at least equal to the current post-closure cost estimate, except as provided in § 264.145(g). The term "face amount" means the total amount the insurer is obligated to pay under the policy. Actual payments by the insurer will not change the face amount, although the insurer's future liability will be lowered by the amount of the payments.

(4) The post-closure insurance policy must guarantee that funds will be available to provide post-closure care of the facility whenever the post-closure period begins. The policy must also guarantee that once post-closure care begins, the insurer will be responsible for paying out funds, up to an amount equal to the face amount of the policy, upon the direction of the Regional Administrator, to such party or parties as the Regional Administrator specifies.

(5) An owner or operator or any other person authorized to conduct post-closure care may request reimbursements for post-closure care expenditures by submitting itemized bills to the Regional Administrator. Within 60 days after receiving bills for post-closure care activities, the Regional Administrator will instruct the insurer to make reimbursements in those amounts as the Regional Administrator specifies in writing, if the Regional Administrator determines that the post-closure care expenditures are in accordance with the approved post-closure plan or otherwise justified. If the Regional Administrator does not instruct the insurer to make such reimbursements, he will provide the owner or operator with a detailed written statement of reasons.

(6) The owner or operator must maintain the policy in full force and effect until the Regional Administrator consents to termination of the policy by the owner or operator as specified in paragraph (e)(11) of this section. Failure to pay the premium, without substitution of alternate financial assurance as specified in this section, will constitute a significant violation of these regulations, warranting such remedy as the Regional Administrator deems necessary. Such violation will be deemed to begin upon receipt by the Regional Administrator of a notice of future cancellation, termination, or failure to renew due to nonpayment of the premium, rather than upon the date of expiration.

(7) Each policy must contain a provision allowing assignment of the policy to a successor owner or operator. Such assignment may be conditional upon consent of the insurer, provided such consent is not unreasonably refused.

(8) The policy must provide that the insurer may not cancel, terminate, or fail to renew the policy except for failure to pay the premium. The automatic renewal of the policy must, at a minimum, provide the insured with the option of renewal at the face amount of the expiring policy. If there is a failure to pay the premium, the insurer may elect to cancel, terminate, or fail to renew the policy by sending notice by certified mail to the owner or operator and the Regional Administrator. Cancellation, termination, or failure to renew may not occur, however, during the 120 days beginning with the date of receipt of the notice by both the Regional Administrator and the owner or operator, as evidenced by the return receipts. Cancellation, termination, or failure to renew may not occur and the policy will remain in full force and effect in the event that on or before the date of expiration:

(i) The Regional Administrator deems the facility abandoned; or

(ii) The permit is terminated or revoked or a new permit is denied; or

(iii) Closure is ordered by the Regional Administrator or a U.S. district court or other court of competent jurisdiction; or

(iv) The owner or operator is named as debtor in a voluntary or involuntary proceeding under Title 11 (Bankruptcy), U.S. Code; or

(v) The premium due is paid.

(9) Whenever the current post-closure cost estimate increases to an amount greater than the face amount of the policy during the operating life of the facility, the owner or operator, within 60 days after the increase, must either cause the face amount to be increased to an amount at least equal to the current post-closure cost estimate and submit evidence of such increase to the Regional Administrator, or obtain other financial assurance as specified in this section to cover the increase. Whenever the current post-closure cost estimate decreases during the operating life of the facility, the face amount may be reduced to the amount of the current post-closure cost estimate following written approval by the Regional Administrator.

(10) Commencing on the date that liability to make payments pursuant to the policy accrues, the insurer will thereafter annually increase the face amount of the policy. Such increase must be equivalent to the face amount of the policy, less any payments made, multiplied by an amount equivalent to 85 percent of the most recent investment rate or of the equivalent coupon-issue yield announced by the U.S. Treasury for 26-week Treasury securities.

(11) The Regional Administrator will give written consent to the owner or operator that he may terminate the insurance policy when:

(i) An owner or operator substitutes alternate financial assurance as specified in this section; or

(ii) The Regional Administrator releases the owner or operator from the requirements of this section in accordance with § 264.145(i).

(f) *Financial test and corporate guarantee for post-closure care.* (1) An owner or operator may satisfy the requirements of this section by demonstrating that he passes a financial test as specified in this paragraph. To pass this test the owner or operator must meet the criteria of either paragraph (f)(1)(i) or (ii) of this section:

(i) The owner or operator must have:

(A) Two of the following three ratios: a ratio of total liabilities to net worth less than 2.0; a ratio of the sum of net income plus depreciation, depletion, and amortization to total liabilities greater than 0.1; and a ratio of current assets to current liabilities greater than 1.5; and

(B) Net working capital and tangible net worth each at least six times the sum of the current closure and post-closure cost estimates and the current plugging and abandonment cost estimates; and

(C) Tangible net worth of at least $10 million; and

(D) Assets in the United States amounting to at least 90 percent of his total assets or at least six times the sum of the current closure and post-closure cost estimates and the current plugging and abandonment cost estimates.

(ii) The owner or operator must have:

(A) A current rating for his most recent bond issuance of AAA, AA, A, or BBB as issued by Standard and Poor's or Aaa, Aa, A or Baa as issued by Moody's; and

(B) Tangible net worth at least six times the sum of the current closure and post-closure cost estimates and the current plugging and abandonment cost estimates; and

(4) The bond must guarantee that the owner or operator will:

(i) Perform post-closure care in accordance with the post-closure plan and other requirements of the permit for the facility; or

(ii) Provide alternate financial assurance as specified in this section, and obtain the Regional Administrator's written approval of the assurance provided, within 90 days of receipt by both the owner or operator and the Regional Administrator of a notice of cancellation of the bond from the surety.

(5) Under the terms of the bond, the surety will become liable on the bond obligation when the owner or operator fails to perform as guaranteed by the bond. Following a final administrative determination pursuant to section 3008 of RCRA that the owner or operator has failed to perform post-closure care in accordance with the approved post-closure plan and other permit requirements, under the terms of the bond the surety will perform post-closure care in accordance with the post-closure plan and other permit requirements or will deposit the amount of the penal sum into the standby trust fund.

(6) The penal sum of the bond must be in an amount at least equal to the current post-closure cost estimate.

(7) Whenever the current post-closure cost estimate increases to an amount greater than the penal sum during the operating life of the facility, the owner or operator, within 60 days after the increase, must either cause the penal sum to be increased to an amount at least equal to the current post-closure cost estimate and submit evidence of such increase to the Regional Administrator, or obtain other financial assurance as specified in this section. Whenever the current post-closure cost estimate decreases during the operating life of the facility, the penal sum may be reduced to the amount of the current post-closure cost estimate following written approval by the Regional Administrator.

(8) During the period of post-closure care, the Regional Administrator may approve a decrease in the penal sum if the owner or operator demonstrates to the Regional Administrator that the amount exceeds the remaining cost of post-closure care.

(9) Under the terms of the bond, the surety may cancel the bond by sending notice of cancellation by certified mail to the owner or operator and to the Regional Administrator. Cancellation may not occur, however, during the 120 days beginning on the date of receipt of the notice of cancellation by both the owner or operator and the Regional Administrator, as evidenced by the return receipts.

(10) The owner or operator may cancel the bond if the Regional Administrator has given prior written consent. The Regional Administrator will provide such written consent when:

(i) An owner or operator substitutes alternate financial assurance as specified in this section; or

(ii) The Regional Administrator releases the owner or operator from the requirements of this section in accordance with § 264.145(i).

(11) The surety will not be liable for deficiencies in the performance of post-closure care by the owner or operator after the Regional Administrator releases the owner or operator from the requirements of this section in accordance with § 264.145(i).

(d) *Post-closure letter of credit.* (1) An owner or operator may satisfy the requirements of this section by obtaining an irrevocable standby letter of credit which conforms to the requirements of this paragraph and submitting the letter to the Regional Administrator. An owner or operator of a new facility must submit the letter of credit to the Regional Administrator at least 60 days before the date on which hazardous waste is first received for disposal. The letter of credit must be effective before this initial receipt of hazardous waste. The issuing institution must be an entity which has the authority to issue letters of credit and whose letter-of-credit operations are regulated and examined by a Federal or State agency.

(2) The wording of the letter of credit must be identical to the wording specified in § 264.151(d).

(3) An owner or operator who uses a letter of credit to satisfy the requirements of this section must also establish a standby trust fund. Under the terms of the letter of credit, all amounts paid pursuant to a draft by the Regional Administrator will be deposited by the issuing institution directly into the standby trust fund in accordance with instructions from the Regional Administrator. This standby trust fund must meet the requirements of the trust fund specified in § 264.145(a), except that:

(i) An originally signed duplicate of the trust agreement must be submitted to the Regional Administrator with the letter of credit; and

(ii) Unless the standby trust fund is funded pursuant to the requirements of this section, the following are not required by these regulations:

(A) Payments into the trust fund as specified in § 264.145(a);

(B) Updating of Schedule A of the trust agreement (see § 264.151(a)) to show current post-closure cost estimates;

(C) Annual valuations as required by the trust agreement; and

(D) Notices of nonpayment as required by the trust agreement.

(4) The letter of credit must be accompanied by a letter from the owner or operator referring to the letter of credit by number, issuing institution, and date, and providing the following information: the EPA Identification Number, name, and address of the facility, and the amount of funds assured for post-closure care of the facility by the letter of credit.

(5) The letter of credit must be irrevocable and issued for a period of at least 1 year. The letter of credit must provide that the expiration date will be automatically extended for a period of at least 1 year unless, at least 120 days before the current expiration date, the issuing institution notifies both the owner or operator and the Regional Administrator by certified mail of a decision not to extend the expiration date. Under the terms of the letter of credit, the 120 days will begin on the date when both the owner or operator and the Regional Administrator have received the notice, as evidenced by the return receipts.

(6) The letter of credit must be issued in a amount at least equal to the current post-closure cost estimate, except as provided in § 264.145(g).

(7) Whenever the current post-closure cost estimate increases to an amount greater than the amount of the credit during the operating life of the facility, the owner or operator, within 60 days after the increase, must either cause the amount of the credit to be increased so that it at least equals the current post-closure cost estimate and submit evidence of such increase to the Regional Administrator, or obtain other financial assurance as specified in this section to cover the increase. Whenever the current post-closure cost estimate decreases during the operating life of the facility, the amount of the credit may be reduced to the amount of the current post-closure cost estimate following written approval by the Regional Administrator.

(8) During the period of post-closure care, the Regional Administrator may approve a decrease in the amount of the letter of credit if the owner or operator demonstrates to the Regional Administrator that the amount exceeds the remaining cost of post-closure care.

(9) Following a final administrative determination pursuant to section 3008 of RCRA that the owner or operator has failed to perform post-closure care in accordance with the approved post-closure plan and other permit requirements, the Regional Administrator may draw on the letter of credit.

(10) If the owner or operator does not establish alternate financial assurance as specified in this section and obtain written approval of such alternate assurance from the Regional Administrator within 90 days after receipt by both the owner or operator and the Regional Administrator of a notice from the issuing institution that it has decided not to extend the letter of credit beyond the current expiration date, the Regional Administrator will draw on the letter of credit. The Regional Administrator may delay the drawing if the issuing institution grants an extension of the term of the credit. During the last 30 days of any such extension the Regional Administrator will draw on the letter of credit if the owner or operator has

tors of all such Regions. The amount of funds available through the mechanism must be no less than the sum of funds that would be available if a separate mechanism had been established and maintained for each facility. In directing funds available through the mechanism for post-closure care of any of the facilities covered by the mechanism, the Regional Administrator may direct only the amount of funds designated for that facility, unless the owner or operator agrees to the use of additional funds available under the mechanism.

(i) *Release of the owner or operator from the requirements of this section.* Within 60 days after receiving certifications from the owner or operator and an independent registered professional engineer that the post-closure care period has been completed for a hazardous waste disposal unit in accordance with the approved plan, the Regional Administrator will notify the owner or operator that he is no longer required to maintain financial assurance for post-closure care of that unit, unless the Regional Administrator has reason to believe that post-closure care has not been in accordance with the approved post-closure plan. The Regional Administrator shall provide the owner or operator with a detailed written statement of any such reason to believe that post-closure care has not been in accordance with the approved post-closure plan.

[47 FR 15047, Apr. 7, 1982, as amended at 51 FR 16449, May 2, 1986]

§ 264.146 Use of a mechanism for financial assurance of both closure and post-closure care.

An owner or operator may satisfy the requirements for financial assurance for both closure and post-closure care for one or more facilities by using a trust fund, surety bond, letter of credit, insurance, financial test, or corporate guarantee that meets the specifications for the mechanism in both §§ 264.143 and 264.145. The amount of funds available through the mechanism must be no less than the sum of funds that would be available if a separate mechanism had been established and maintained for financial assurance of closure and of post-closure care.

§ 264.147 Liability requirements.

(a) *Coverage for sudden accidental occurrences.* An owner or operator of a hazardous waste treatment, storage, or disposal facility, or a group of such facilities, must demonstrate financial responsibility for bodily injury and property damage to third parties caused by sudden accidental occurrences arising from operations of the facility or group of facilities. The owner or operator must have and maintain liability coverage for sudden accidental occurrences in the amount of at least $1 million per occurrence with an annual aggregate of at least $2 million, exclusive of legal defense costs. This liability coverage may be demonstrated in one of three ways, as specified in paragraphs (a)(1), (2), and (3) of this section:

(1) An owner or operator may demonstrate the required liability coverage by having liability insurance as specified in this paragraph.

(i) Each insurance policy must be amended by attachment of the Hazardous Waste Facility Liability Endorsement or evidenced by a Certificate of Liability Insurance. The wording of the endorsement must be identical to the wording specified in § 264.151(i). The wording of the certificate of insurance must be identical to the wording specified in § 264.151(j). The owner or operator must submit a signed duplicate original of the endorsement or the certificate of insurance to the Regional Administrator, or Regional Administrators if the facilities are located in more than one Region. If requested by a Regional Administrator, the owner or operator must provide a signed duplicate original of the insurance policy. An owner or operator of a new facility must submit the signed duplicate original of the Hazardous Waste Facility Liability Endorsement or the Certificate of Liability Insurance to the Regional Administrator at least 60 days before the date on which hazardous waste is first received for treatment, storage, or disposal. The insurance must be effective before this initial receipt of hazardous waste.

(ii) Each insurance policy must be issued by an insurer which, at a minimum, is licensed to transact the business of insurance, or eligible to provide insurance as an excess or surplus lines insurer, in one or more States.

(2) An owner operator may meet the requirements of this section by passing a financial test or using the corporate guarantee for liability coverage as specified in paragraph (g) of this section.

(3) An owner or operator may demonstrate the required liability coverage through use of the financial test, insurance, the corporate guarantee, a combination of the financial test and insurance, or a combination of the corporate guarantee and insurance. The amount of coverage demonstrated must total at least the minimum amounts required by this paragraph.

(b) *Coverage for nonsudden accidental occurrences.* An owner or operator of a surface impoundment, landfill, land treatment facility, or miscellaneous disposal unit that is used to manage hazardous waste, or a group of such facilities, must demonstrate financial responsibility for bodily injury and property damage to third parties caused by nonsudden accidental occurrences arising from operations of the facility or group of facilities. The owner or operator must have and maintain liability coverage for nonsudden accidental occurrences in the amount of at least $3 million per occurrence with an annual aggregate of at least $6 million, exclusive of legal defense costs. This liability coverage may be demonstrated in one of three ways, as specified in paragraphs (b)(1), (2), and (3) of this section:

(1) An owner or operator may demonstrate the required liability coverage by having liability insurance as specified in this paragraph.

(i) Each insurance policy must be amended by attachment of the Hazardous Waste Facility Liability Endorsement or evidenced by a Certificate of Liability Insurance. The wording of the endorsement must be identical to the wording specified in § 264.151(i). The wording of the certificate of insurance must be identical to the wording specified in § 264.151(j). The owner or operator must submit a signed duplicate original of the endorsement or the certificate of insurance to the Regional Administrator, or Regional Administrators if the facilities are located in more than one Region. If requested by a Regional Administrator, the owner or operator must provide a signed duplicate original of the insurance policy. An owner or operator of a new facility must submit the signed duplicate original of the Hazardous Waste Facility Liability Endorsement or the Certificate of Liability Insurance to the Regional Administrator at least 60 days before the date on which hazardous waste is first received for treatment, storage, or disposal. The insurance must be effective before this initial receipt of hazardous waste.

(ii) Each insurance policy must be issued by an insurer which, at a minimum, is licensed to transact the business of insurance, or eligible to provide insurance as an excess or surplus lines insurer, in one or more States.

(2) An owner or operator may meet the requirements of this section by passing a financial test or using the corporate guarantee for liability coverage as specified in paragraphs (f) and (g) of this section.

(3) An owner or operator may demonstrate the required liability coverage through use of the financial test, insurance, the corporate guarantee, a combination of the financial test and insurance, or a combination of the corporate guarantee and insurance. The amounts of coverage demonstrated must total at least the minimum amounts required by this paragraph.

(4) For existing facilities, the required liability coverage for nonsudden accidental occurrences must be demonstrated by the dates listed below. The total sales or revenues of the owner or operator in all lines of business, in the fiscal year preceding the effective date of these regulations, will determine which of the dates applies. If the owner and operator of a facility are two different parties, or if there is more than one owner or operator, the sales or revenues of the owner or operator with the largest sales or revenues will determine the

(C) Tangible net worth of at least $10 million; and

(D) Assets located in the United States amounting to at least 90 percent of his total assets or at least six times the sum of the current closure and post-closure cost estimates and the current plugging and abandonment cost estimates.

(2) The phrase "current closure and post-closure cost estimates" as used in paragraph (f)(1) of this section refers to the cost estimates required to be shown in paragraphs 1-4 of the letter from the owner's or operator's chief financial officer (§ 264.151(f)). The phrase "current plugging and abandonment cost estimates" as used in paragraph (f)(1) of this section refers to the cost estimates required to be shown in paragraphs 1-4 of the letter from the owner's or operator's chief financial officer (§ 144.70(f) of this title).

(3) To demonstrate that he meets this test, the owner or operator must submit the following items to the Regional Administrator:

(i) A letter signed by the owner's or operator's chief financial officer and worded as specified in § 264.151(f); and

(ii) A copy of the independent certified public accountant's report on examination of the owner's or operator's financial statements for the latest completed fiscal year; and

(iii) A special report from the owner's or operator's independent certified public accountant to the owner or operator stating that:

(A) He has compared the data which the letter from the chief financial officer specifies as having been derived from the independently audited, year-end financial statements for the latest fiscal year with the amounts in such financial statements; and

(B) In connection with that procedure, no matters came to his attention which caused him to believe that the specified data should be adjusted.

(4) An owner or operator of a new facility must submit the items specified in paragraph (f)(3) of this section to the Regional Administrator at least 60 days before the date on which hazardous waste is first received for disposal.

(5) After the initial submission of items specified in paragraph (f)(3) of this section, the owner or operator must send updated information to the Regional Administrator within 90 days after the close of each succeeding fiscal year. This information must consist of all three items specified in paragraph (f)(3) of this section.

(6) If the owner or operator no longer meets the requirements of paragraph (f)(1) of this section, he must send notice to the Regional Administrator of intent to establish alternate financial assurance as specified in this section. The notice must be sent by certified mail within 90 days after the end of the fiscal year for which the year-end financial data show that the owner or operator no longer meets the requirements. The owner or operator must provide the alternate financial assurance within 120 days after the end of such fiscal year.

(7) The Regional Administrator may, based on a reasonable belief that the owner or operator may no longer meet the requirements of paragraph (f)(1) of this section, require reports of financial condition at any time from the owner or operator in addition to those specified in paragraph (f)(3) of this section. If the Regional Administrator finds, on the basis of such reports or other information, that the owner or operator no longer meets the requirements of paragraph (f)(1) of this section, the owner or operator must provide alternate financial assurance as specified in this section within 30 days after notification of such a finding.

(8) The Regional Administrator may disallow use of this test on the basis of qualifications in the opinion expressed by the independent certified public accountant in his report on examination of the owner's or operator's financial statements (see paragraph (f)(3)(ii) of this section). An adverse opinion or a disclaimer of opinion will be cause for disallowance. The Regional Administrator will evaluate other qualifications on an individual basis. The owner or operator must provide alternate financial assurance as specified in this section within 30 days after notification of the disallowance.

(9) During the period of post-closure care, the Regional Administrator may approve a decrease in the current post-closure cost estimate for which this test demonstrates financial assurance if the owner or operator demonstrates to the Regional Administrator that the amount of the cost estimate exceeds the remaining cost of post-closure care.

(10) The owner or operator is no longer required to submit the items specified in paragraph (f)(3) of this section when:

(i) An owner or operator substitutes alternate financial assurance as specified in this section; or

(ii) The Regional Administrator releases the owner or operator from the requirements of this section in accordance with § 264.145(i).

(11) An owner or operator may meet the requirements of this section by obtaining a written guarantee, hereafter referred to as "corporate guarantee." The guarantor must be the parent corporation of the owner or operator. The guarantor must meet the requirements for owners or operators in paragraphs (f)(1) through (9) of this section and must comply with the terms of the corporate guarantee. The wording of the corporate guarantee must be identical to the wording specified in § 264.151(h). The corporate guarantee must accompany the items sent to the Regional Administrator as specified in paragraph (f)(3) of this section. The terms of the corporate guarantee must provide that:

(i) If the owner or operator fails to perform post-closure care of a facility covered by the corporate guarantee in accordance with the post-closure plan and other permit requirements whenever required to do so, the guarantor will do so or establish a trust fund as specified in § 264.145(a) in the name of the owner or operator.

(ii) The corporate guarantee will remain in force unless the guarantor sends notice of cancellation by certified mail to the owner or operator and to the Regional Administrator. Cancellation may not occur, however, during the 120 days beginning on the date of receipt of the notice of cancellation by both the owner or operator and the Regional Administrator, as evidenced by the return receipts.

(iii) If the owner or operator fails to provide alternate financial assurance as specified in this section and obtain the written approval of such alternate assurance from the Regional Administrator within 90 days after receipt by both the owner or operator and the Regional Administrator of a notice of cancellation of the corporate guarantee from the guarantor, the guarantor will provide such alternate financial assurance in the name of the owner or operator.

(g) *Use of multiple financial mechanisms.* An owner or operator may satisfy the requirements of this section by establishing more than one financial mechanism per facility. These mechanisms are limited to trust funds, surety bonds guaranteeing payment into a trust fund, letters of credit, and insurance. The mechanisms must be as specified in paragraphs (a), (b), (d), and (e), respectively, of this section, except that it is the combination of mechanisms, rather than the single mechanism, which must provide financial assurance for an amount at least equal to the current post-closure cost estimate. If an owner or operator uses a trust fund in combination with a surety bond or a letter of credit, he may use the trust fund as the standby trust fund for the other mechanisms. A single standby trust fund may be established for two or more mechanisms. The Regional Administrator may use any or all of the mechanisms to provide for post-closure care of the facility.

(h) *Use of a financial mechanism for multiple facilities.* An owner or operator may use a financial assurance mechanism specified in this section to meet the requirements of this section for more than one facility. Evidence of financial assurance submitted to the Regional Administrator must include a list showing, for each facility, the EPA Identification Number, name, address, and the amount of funds for post-closure care assured by the mechanism. If the facilities covered by the mechanism are in more than one Region, identical evidence of financial assurance must be submitted to and maintained with the Regional Administra-

20-142 O—88——18

amount of required liability coverage as specified in this section within 30 days after notification of disallowance.

(g) Corporate guarantee for liability coverage. (1) Subject to paragraph (g)(2) of this section, an owner or operator may meet the requirements of this section by obtaining a written guarantee, hereinafter referred to as "corporate guarantee." The guarantor must be the parent corporation of the owner or operator. The guarantee must meet the requirements for owners or operators in paragraphs (f)(1) through (7) of this section. The wording of the corporate guarantee must be identical to the wording specified in § 264.151(h)(2). A certified copy of the corporate guarantee must accompany the items sent to the Regional Administrator as specified in paragraph (f)(3) of this section. The terms of the corporate guarantee must provide that:

(i) If the owner or operator fails to satisfy a judgment based on a determination of liability for bodily injury or property damage to third parties caused by sudden or nonsudden accidental occurrences (or both as the case may be), arising from the operation of facilities covered by this corporate guarantee, or fails to pay an amount agreed to in settlement of claims arising from or alleged to arise from such injury or damage, the guarantor will do so up to the limits of coverage.

(ii) The corporate guarantee will remain in force unless the guarantor sends notice of cancellation by certified mail to the owner or operator and to the Regional Administrator(s). This guarantee may not be terminated unless and until the EPA Regional Administrator(s) approve(s) alternate liability coverage complying with section 264.147 and/or 265.147.

(2)(i) In the case of corporations incorporated in the United States, a corporate guarantee may be used to satisfy the requirements of this section only if the Attorneys General or Insurance Commissioners of (A) the State in which the guarantor is incorporated, and (B) each State in which a facility covered by the guarantee is located have submitted a written statement to EPA that a corporate guarantee executed as described in this section and § 264.151(h)(2) is a legally valid and enforceable obligation in that State.

(ii) In the case of corporations incorporated outside the United States, a corporate guarantee may be used to satisfy the requirements of this section only if (A) the non-U.S. corporation has identified a registered agent for service of process in each State in which a facility covered by the guarantee is located and in the State in which it has its principal place of business, and (B) the Attorney General or Insurance Commissioner of each State in which a facility covered by the guarantee is located and the State in which the guarantor corporation has its principal place of business, has submitted a written statement to EPA that a corporate guarantee executed as described in this section and § 264.151(h)(2) is a legally valid and enforceable obligation in that State.

(h) Notwithstanding any other provision of this part, an owner or operator using liability insurance to satisfy the requirements of this section may use, until October 16, 1982, a Hazardous Waste Facility Liability Endorsement or Certificate of Liability Insurance that does not certify that the insurer is licensed to transact the business of insurance, or eligible as an excess or surplus lines insurer, in one or more States.

(Approved by the Office of Management and Budget under control number 2000-0445, for paragraphs (a)(1)(i), (b)(1)(i), (c), (d), and (f)(3) through (6))

[47 FR 16554, Apr. 16, 1982, as amended at 47 FR 26627, July 1, 1982; 47 FR 30447, July 13, 1982; 48 FR 30115, June 30, 1983; 51 FR 16450, May 2, 1986; 51 FR 25354, July 11, 1986; 53 FR 44320, Nov. 18, 1987; 52 FR 46964, Dec. 10, 1987]

§ 264.148 Incapacity of owners or operators, guarantors, or financial institutions.

(a) An owner or operator must notify the Regional Administrator by certified mail of the commencement of a voluntary or involuntary proceeding under Title 11 (Bankruptcy), U.S. Code, naming the owner or operator as debtor, within 10 days after commencement of the proceeding. A guarantor of a corporate guarantee as specified in §§ 264.143(f) and 264.145(f) must make such a notification if he is named as debtor, as required under the terms of the corporate guarantee (§ 264.151(h)).

(b) An owner or operator who fulfills the requirements of § 264.143, § 264.145, or § 264.147 by obtaining a trust fund, surety bond, letter of credit, or insurance policy will be deemed to be without the required financial assurance or liability coverage in the event of bankruptcy of the trustee or issuing institution, or a suspension or revocation of the authority of the trustee institution to act as trustee or of the institution issuing the surety bond, letter of credit, or insurance policy to issue such instruments. The owner or operator must establish other financial assurance or liability coverage within 60 days after such an event.

§ 264.149 Use of State-required mechanisms.

(a) For a facility located in a State where EPA is administering the requirements of this subpart but where the State has hazardous waste regulations that include requirements for financial assurance of closure or post-closure care or liability coverage, an owner or operator may use State-required financial mechanisms to meet the requirements of § 264.143, § 264.145, or § 264.147, if the Regional Administrator determines that the State mechanisms are at least equivalent to the financial mechanism specified in this subpart. The Regional Administrator will evaluate the equivalency of the mechanisms principally in terms of (1) certainty of the availability of funds for the required closure or post-closure care activities or liability coverage and (2) the amount of funds that will be made available. The Regional Administrator may also consider other factors as he deems appropriate. The owner or operator must submit to the Regional Administrator evidence of the establishment of the mechanism together with a letter requesting that the State-required mechanism be considered acceptable for meeting the requirements of this subpart. The submission must include the following information: The facility's EPA Identification Number, name, and address, and the amount of funds for closure or post-closure care or liability coverage assured by the mechanism. The Regional Administrator will notify the owner or operator of his determination regarding the mechanism's acceptability in lieu of financial mechanisms specified in this subpart. The Regional Administrator may require the owner or operator to submit additional information as is deemed necessary to make this determination. Pending this determination, the owner or operator will be deemed to be in compliance with the requirements of § 264.143, § 264.145, or § 264.147, as applicable.

(b) If a State-required mechanism is found acceptable as specified in paragraph (a) of this section except for the amount of funds available, the owner or operator may satisfy the requirements of this subpart by increasing the funds available through the State-required mechanism or using additional financial mechanisms as specified in this subpart. The amount of funds available through the State and Federal mechanisms must at least equal the amount required by this subpart.

§ 264.150 State assumption of responsibility.

(a) If a State either assumes legal responsibility for an owner's or operator's compliance with the closure, post-closure care, or liability requirements of this part or assures that funds will be available from State sources to cover those requirements, the owner or operator will be in compliance with the requirements of § 264.143, § 264.145, or § 264.147 if the Regional Administrator determines that the State's assumption of responsibility is at least equivalent to the financial mechanisms specified in this subpart. The Regional Administrator will evaluate the equivalency of State guarantees principally in terms of (1) certainty of the availability of funds for the required closure or post-closure care activities or liability coverage and (2) the amount of funds that will be made available. The Regional Administrator may also consider other factors as he deems appropriate. The

date by which the coverage must be demonstrated. The dates are as follows:

(i) For an owner or operator with sales or revenues totalling $10 million or more, 6 months after the effective date of these regulations.

(ii) For an owner or operator with sales or revenues greater than $5 million but less than $10 million, 18 months after the effective date of these regulations.

(iii) All other owners or operators, 30 months after the effective date of these regulations.

(c) *Request for variance.* If an owner or operator can demonstrate to the satisfaction of the Regional Administrator that the levels of financial responsibility required by paragraph (a) or (b) of this section are not consistent with the degree and duration of risk associated with treatment, storage, or disposal at the facility or group of facilities, the owner or operator may obtain a variance from the Regional Administrator. The request for a variance must be submitted to the Regional Administrator as part of the application under § 270.14 of this chapter for a facility that does not have a permit, or pursuant to the procedures for permit modification under § 124.5 of this chapter for a facility that has a permit. If granted, the variance will take the form of an adjusted level of required liability coverage, such level to be based on the Regional Administrator's assessment of the degree and duration of risk associated with the ownership or operation of the facility or group of facilities. The Regional Administrator may require an owner or operator who requests a variance to provide such technical and engineering information as is deemed necessary by the Regional Administrator to determine a level of financial responsibility other than that required by paragraph (a) or (b) of this section. Any request for a variance for a permitted facility will be treated as a request for a permit modification under §§ 270.41(a)(5) and 124.5 of this chapter.

(d) *Adjustments by the Regional Administrator.* If the Regional Administrator determines that the levels of financial responsibility required by paragraph (a) or (b) of this section are not consistent with the degree and duration of risk associated with treatment, storage, or disposal at the facility or group of facilities, the Regional Administrator may adjust the level of financial responsibility required under paragraph (a) or (b) of this section as may be necessary to protect human health and the environment. This adjusted level will be based on the Regional Administrator's assessment of the degree and duration of risk associated with the ownership or operation of the facility or group of facilities. In addition, if the Regional Administrator determines that there is a significant risk to human health and the environment from nonsudden accidental occurrences resulting from the operations of a facility that is not a surface impoundment, landfill, or land treatment facility, he may require that an owner or operator of the facility comply with paragraph (b) of this section. An owner or operator must furnish to the Regional Administrator, within a reasonable time, any information which the Regional Administrator requests to determine whether cause exists for such adjustments of level or type of coverage. Any adjustment of the level or type of coverage for a facility that has a permit will be treated as a permit modification under §§ 270.41(a)(5) and 124.5 of this chapter.

(e) *Period of coverage.* Within 60 days after receiving certifications from the owner or operator and an independent registered professional engineer that final closure has been completed in accordance with the approved closure plan, the Regional Administrator will notify the owner or operator in writing that he is no longer required by this section to maintain liability coverage for that facility, unless the Regional Administrator has reason to believe that closure has not been in accordance with the approved closure plan.

(f) *Financial test for liability coverage.* (1) An owner or operator may satisfy the requirements of this section by demonstrating that he passes a financial test as specified in this paragraph. To pass this test the owner or operator must meet the criteria of paragraph (f)(1)(i) or (ii):

(i) The owner or operator must have:

(A) Net working capital and tangible net worth each at least six times the amount of liability coverage to be demonstrated by this test; and

(B) Tangible net worth of at least $10 million; and

(C) Assets in the United States amounting to either: (*1*) At least 90 percent of his total assets; or (*2*) at least six times the amount of liability coverage to be demonstrated by this test.

(ii) The owner or operator must have:

(A) A current rating for his most recent bond issuance of AAA, AA, A, or BBB as issued by Standard and Poor's, or Aaa, Aa, A, or Baa as issued by Moody's; and

(B) Tangible net worth of at least $10 million; and

(C) Tangible net worth at least six times the amount of liability coverage to be demonstrated by this test; and

(D) Assets in the United States amounting to either: (*1*) At least 90 percent of his total assets; or (*2*) at least six times the amount of liability coverage to be demonstrated by this test.

(2) The phrase "amount of liability coverage" as used in paragraph (f)(1) of this section refers to the annual aggregate amounts for which coverage is required under paragraphs (a) and (b) of this section.

(3) To demonstrate that he meets this test, the owner or operator must submit the following three items to the Regional Administrator:

(i) A letter signed by the owner's or operator's chief financial officer and worded as specified in § 264.151(g). If an owner or operator is using the financial test to demonstrate both assurance for closure or post-closure care, as specified by §§ 264.143(f), 264.145(f), 265.143(e), and 265.145(e), and liability coverage, he must submit the letter specified in § 264.151(g) to cover both forms of financial responsibility; a separate letter as specified in § 264.151(f) is not required.

(ii) A copy of the independent certified public accountant's report on examination of the owner's or operator's financial statements for the latest completed fiscal year.

(iii) A special report from the owner's or operator's independent certified public accountant to the owner or operator stating that:

(A) He has compared the data which the letter from the chief financial officer specifies as having been derived from the independently audited, year-end financial statements for the latest fiscal year with the amounts in such financial statements; and

(B) In connection with that procedure, no matters came to his attention which caused him to believe that the specified data should be adjusted.

(4) An owner or operator of a new facility must submit the items specified in paragraph (f)(3) of this section to the Regional Administrator at least 60 days before the date on which hazardous waste is first received for treatment, storage, or disposal.

(5) After the initial submission of items specified in paragraph (f)(3) of this section, the owner or operator must send updated information to the Regional Administrator within 90 days after the close of each succeeding fiscal year. This information must consist of all three items specified in paragraph (f)(3) of this section.

(6) If the owner or operator no longer meets the requirements of paragraph (f)(1) of this section, he must obtain insurance for the entire amount of required liability coverage as specified in this section. Evidence of insurance must be submitted to the Regional Administrator within 90 days after the end of the fiscal year for which the year-end financial data show that the owner or operator no longer meets the test requirements.

(7) The Regional Administrator may disallow use of this test on the basis of qualifications in the opinion expressed by the independent certified public accountant in his report on examination of the owner's or operator's financial statements (see paragraph (f)(3)(ii) of this section). An adverse opinion or a disclaimer of opinion will be cause for disallowance. The Regional Administrator will evaluate other qualifications on an individual basis. The owner or operator must provide evidence of insurance for the entire

Grantor, and all other proper charges and disbursements of the Trustee shall be paid from the Fund.

Section 10. Annual Valuation. The Trustee shall annually, at least 30 days prior to the anniversary date of establishment of the Fund, furnish to the Grantor and to the appropriate EPA Regional Administrator a statement confirming the value of the Trust. Any securities in the Fund shall be valued at market value as of no more than 60 days prior to the anniversary date of establishment of the Fund. The failure of the Grantor to object in writing to the Trustee within 90 days after the statement has been furnished to the Grantor and the EPA Regional Administrator shall constitute a conclusively binding assent by the Grantor, barring the Grantor from asserting any claim or liability against the Trustee with respect to matters disclosed in the statement.

Section 11. Advice of Counsel. The Trustee may from time to time consult with counsel, who may be counsel to the Grantor, with respect to any question arising as to the construction of this Agreement or any action to be taken hereunder. The Trustee shall be fully protected, to the extent permitted by law, in acting upon the advice of counsel.

Section 12. Trustee Compensation. The Trustee shall be entitled to reasonable compensation for its services as agreed upon in writing from time to time with the Grantor.

Section 13. Successor Trustee. The Trustee may resign or the Grantor may replace the Trustee, but such resignation or replacement shall not be effective until the Grantor has appointed a successor trustee and this successor accepts the appointment. The successor trustee shall have the same powers and duties as those conferred upon the Trustee hereunder. Upon the successor trustee's acceptance of the appointment, the Trustee shall assign, transfer, and pay over to the successor trustee the funds and properties then constituting the Fund. If for any reason the Grantor cannot or does not act in the event of the resignation of the Trustee, the Trustee may apply to a court of competent jurisdiction for the appointment of a successor trustee or for instructions. The successor trustee shall specify the date on which it assumes administration of the trust in a writing sent to the Grantor, the EPA Regional Administrator, and the present Trustee by certified mail 10 days before such change becomes effective. Any expenses incurred by the Trustee as a result of any of the acts contemplated by this Section shall be paid as provided in Section 9.

Section 14. Instructions to the Trustee. All orders, requests, and instructions by the Grantor to the Trustee shall be in writing, signed by such persons as are designated in the attached Exhibit A or such other designees as the Grantor may designate by amendment to Exhibit A. The Trustee shall be fully protected in acting without inquiry in accordance with the Grantor's orders, requests, and instructions. All orders, requests, and instructions by the EPA Regional Administrator to the Trustee shall be in writing, signed by the EPA Regional Administrators of the Regions in which the facilities are located, or their designees, and the Trustee shall act and shall be fully protected in acting in accordance with such orders, requests, and instructions. The Trustee shall have the right to assume, in the absence of written notice to the contrary, that no event constituting a change or a termination of the authority of any person to act on behalf of the Grantor or EPA hereunder has occurred. The Trustee shall have no duty to act in the absence of such orders, requests, and instructions from the Grantor and/or EPA, except as provided for herein.

Section 15. Notice of Nonpayment. The Trustee shall notify the Grantor and the appropriate EPA Regional Administrator, by certified mail within 10 days following the expiration of the 30-day period after the anniversary of the establishment of the Trust, if no payment is received from the Grantor during that period. After the pay-in period is completed, the Trustee shall not be required to send a notice of nonpayment.

Section 16. Amendment of Agreement. This Agreement may be amended by an instrument in writing executed by the Grantor, the Trustee, and the appropriate EPA Regional Administrator, or by the Trustee and the appropriate EPA Regional Administrator if the Grantor ceases to exist.

Section 17. Irrevocability and Termination. Subject to the right of the parties to amend this Agreement as provided in Section 16, this Trust shall be irrevocable and shall continue until terminated at the written agreement of the Grantor, the Trustee, and the EPA Regional Administrator, or by the Trustee and the EPA Regional Administrator, if the Grantor ceases to exist. Upon termination of the Trust, all remaining trust property, less final trust administration expenses, shall be delivered to the Grantor.

Section 18. Immunity and Indemnification. The Trustee shall not incur personal liability of any nature in connection with any act or omission, made in good faith, in the administration of this Trust, or in carrying out any directions by the Grantor or the EPA Regional Administrator issued in accordance with this Agreement. The Trustee shall be indemnified and saved harmless by the Grantor or from the Trust Fund, or both, from and against any personal liability to which the Trustee may be subjected by reason of any act or conduct in its official capacity, including all expenses reasonably incurred in its defense in the event the Grantor fails to provide such defense.

Section 19. Choice of Law. This Agreement shall be administered, construed, and enforced according to the laws of the State of [insert name of State].

Section 20. Interpretation. As used in this Agreement, words in the singular include the plural and words in the plural include the singular. The descriptive headings for each Section of this Agreement shall not affect the interpretation or the legal efficacy of this Agreement.

In Witness Whereof the parties have caused this Agreement to be executed by their respective officers duly authorized and their corporate seals to be hereunto affixed and attested as of the date first above written: The parties below certify that the wording of this Agreement is identical to the wording specified in 40 CFR 264.151(a)(1) as such regulations were constituted on the date first above written.

[Signature of Grantor]
[Title]

Attest:
[Title]
[Seal]

[Signature of Trustee]

Attest:
[Title]
[Seal]

(2) The following is an example of the certification of acknowledgment which must accompany the trust agreement for a trust fund as specified in §§ 264.143(a) and 264.145(a) or §§ 265.143(a) or 265.145(a) of this chapter. State requirements may differ on the proper content of this acknowledgment.

State of _____
County of _____

On this [date], before me personally came [owner or operator] to me known, who, being by me duly sworn, did depose and say that she/he resides at [address], that she/he is [title] of [corporation], the corporation described in and which executed the above instrument; that she/he knows the seal of said corporation; that the seal affixed to such instrument is such corporate seal; that it was so affixed by order of the Board of Directors of said corporation, and that she/he signed her/his name thereto by like order.

[Signature of Notary Public]

(b) A surety bond guaranteeing payment into a trust fund, as specified in § 264.143(b) or § 264.145(b) or § 265.143(b) or § 265.145(b) of this chapter, must be worded as follows, except that instructions in brackets are to be replaced with the relevant information and the brackets deleted:

FINANCIAL GUARANTEE BOND

Date bond executed:
Effective date:
Principal: [legal name and business address of owner or operator]
Type of Organization: [insert "individual," "joint venture," "partnership," or "corporation"]
State of incorporation: _____
Surety(ies): [name(s) and business address(es)]
EPA Identification Number, name, address and closure and/or post-closure amount(s) for each facility guaranteed by this bond [indicate closure and post-closure amounts separately]: _____
Total penal sum of bond: $ _____
Surety's bond number: _____

Know All Persons By These Presents, That we, the Principal and Surety(ies) hereto are firmly bound to the U.S. Environmental Protection Agency (hereinafter called EPA), in the above penal sum for the payment of which we bind ourselves, our heirs, executors, administrators, successors, and assigns jointly and severally; provided that, where the Surety(ies) are corporations acting as co-sureties, we, the Sureties, bind ourselves in such sum "jointly and severally" only for the purpose of allowing a joint action or actions against any or all of us, and for all other purposes each Surety binds itself, jointly and severally with the Principal, for the payment of such sum only as is set forth opposite the name of such Surety, but if no limit of liability is indicated, the limit of liability shall be the full amount of the penal sum.

Whereas said Principal is required, under the Resource Conservation and Recovery Act as amended (RCRA), to have a permit or interim status in order to own or operate each hazardous waste management facility identified above, and

Whereas said Principal is required to provide financial assurance for closure, or closure and post-closure care, as a condition of the permit or interim status, and

Whereas said Principal shall establish a standby trust fund as is required when a surety bond is used to provide such financial assurance;

Now, Therefore, the conditions of the obligation are such that if the Principal shall faithfully, before the beginning of final closure of each facility identified above, fund the standby trust fund in the amount(s) identified above for the facility,

Or, if the Principal shall fund the standby trust fund in such amount(s) within 15 days after a final order to begin closure is issued

owner or operator must submit to the Regional Administrator a letter from the State describing the nature of the State's assumption of responsibility together with a letter from the owner or operator requesting that the State's assumption of responsibility be considered acceptable for meeting the requirements of this subpart. The letter from the State must include, or have attached to it, the following information: the facility's EPA Identification Number, name, and address, and the amount of funds for closure or post-closure care or liability coverage that are guaranteed by the State. The Regional Administrator will notify the owner or operator of his determination regarding the acceptability of the State's guarantee in lieu of financial mechanisms specified in this subpart. The Regional Administrator may require the owner or operator to submit additional information as is deemed necessary to make this determination. Pending this determination, the owner or operator will be deemed to be in compliance with the requirements of § 264.143, § 264.145, or § 264.147, as applicable.

(b) If a State's assumption of responsibility is found acceptable as specified in paragraph (a) of this section except for the amount of funds available, the owner or operator may satisfy the requirements of this subpart by use of both the State's assurance *and* additional financial mechanisms as specified in this subpart. The amount of funds available through the State and Federal mechanisms must at least equal the amount required by this subpart.

§ 264.151 Wording of the instruments.

(a)(1) A trust agreement for a trust fund, as specified in § 264.143(a) or § 264.145(a) or § 265.143(a) or § 265.145(a) of this chapter, must be worded as follows, except that instructions in brackets are to be replaced with the relevant information and the brackets deleted:

TRUST AGREEMENT

Trust Agreement, the "Agreement," entered into as of [date] by and between [name of the owner or operator], a [name of State] [insert "corporation," "partnership," "association," or "proprietorship"], the "Grantor," and [name of corporate trustee], [insert "incorporated in the State of ——" or "a national bank"], the "Trustee."

Whereas, the United States Environmental Protection Agency, "EPA," an agency of the United States Government, has established certain regulations applicable to the Grantor, requiring that an owner or operator of a hazardous waste management facility shall provide assurance that funds will be available when needed for closure and/or post-closure care of the facility,

Whereas, the Grantor has elected to establish a trust to provide all or part of such financial assurance for the facilities identified herein,

Whereas, the Grantor, acting through its duly authorized officers, has selected the Trustee to be the trustee under this agreement, and the Trustee is willing to act as trustee,

Now, Therefore, the Grantor and the Trustee agree as follows:

Section 1. Definitions. As used in this Agreement:

(a) The term "Grantor" means the owner or operator who enters into this Agreement and any successors or assigns of the Grantor.

(b) The term "Trustee" means the Trustee who enters into this Agreement and any successor Trustee.

Section 2. Identification of Facilities and Cost Estimates. This Agreement pertains to the facilities and cost estimates identified on attached Schedule A [on Schedule A, for each facility list the EPA Identification Number, name, address, and the current closure and/or post-closure cost estimates, or portions thereof, for which financial assurance is demonstrated by this Agreement].

Section 3. Establishment of Fund. The Grantor and the Trustee hereby establish a trust fund, the "Fund," for the benefit of EPA. The Grantor and the Trustee intend that no third party have access to the Fund except as herein provided. The Fund is established initially as consisting of the property, which is acceptable to the Trustee, described in Schedule B attached hereto. Such property and any other property subsequently transferred to the Trustee is referred to as the Fund, together with all earnings and profits thereon, less any payments or distributions made by the Trustee pursuant to this Agreement. The Fund shall be held by the Trustee, IN TRUST, as hereinafter provided. The Trustee shall not be responsible nor shall it undertake any responsibility for the amount or adequacy of, nor any duty to collect from the Grantor, any payments necessary to discharge any liabilities of the Grantor established by EPA.

Section 4. Payment for Closure and Post-Closure Care. The Trustee shall make payments from the Fund as the EPA Regional Administrator shall direct, in writing, to provide for the payment of the costs of closure and/or post-closure care of the facilities covered by this Agreement. The Trustee shall reimburse the Grantor or other persons as specified by the EPA Regional Administrator from the Fund for closure and post-closure expenditures in such amounts as the EPA Regional Administrator shall direct in writing. In addition, the Trustee shall refund to the Grantor such amounts as the EPA Regional Administrator specifies in writing. Upon refund, such funds shall no longer constitute part of the Fund as defined herein.

Section 5. Payments Comprising the Fund. Payments made to the Trustee for the Fund shall consist of cash or securities acceptable to the Trustee.

Section 6. Trustee Management. The Trustee shall invest and reinvest the principal and income of the Fund and keep the Fund invested as a single fund, without distinction between principal and income, in accordance with general investment policies and guidelines which the Grantor may communicate in writing to the Trustee from time to time, subject, however, to the provisions of this section. In investing, reinvesting, exchanging, selling, and managing the Fund, the Trustee shall discharge his duties with respect to the trust fund solely in the interest of the beneficiary and with the care, skill, prudence, and diligence under the circumstances then prevailing which persons of prudence, acting in a like capacity and familiar with such matters, would use in the conduct of an enterprise of a like character and with like aims; *except that:*

(i) Securities or other obligations of the Grantor, or any other owner or operator of the facilities, or any of their affiliates as defined in the Investment Company Act of 1940, as amended, 15 U.S.C. 80a-2.(a), shall not be acquired or held, unless they are securities or other obligations of the Federal or a State government;

(ii) The Trustee is authorized to invest the Fund in time or demand deposits of the Trustee, to the extent insured by an agency of the Federal or State government; and

(iii) The Trustee is authorized to hold cash awaiting investment or distribution uninvested for a reasonable time and without liability for the payment of interest thereon.

Section 7. Commingling and Investment. The Trustee is expressly authorized in its discretion:

(a) To tranfer from time to time any or all of the assets of the Fund to any common, commingled, or collective trust fund created by the Trustee in which the Fund is eligible to participate, subject to all of the provisions thereof, to be commingled with the assets of other trusts participating therein; and

(b) To purchase shares in any investment company registered under the Investment Company Act of 1940, 15 U.S.C. 80a-1 et seq., including one which may be created, managed, underwritten, or to which investment advice is rendered or the shares of which are sold by the Trustee. The Trustee may vote such shares in its discretion.

Section 8. Express Powers of Trustee. Without in any way limiting the powers and discretions conferred upon the Trustee by the other provisions of this Agreement or by law, the Trustee is expressly authorized and empowered:

(a) To sell, exchange, convey, transfer, or otherwise dispose of any property held by it, by public or private sale. No person dealing with the Trustee shall be bound to see to the application of the purchase money or to inquire into the validity or expediency of any such sale or other disposition;

(b) To make, execute, acknowledge, and deliver any and all documents of transfer and conveyance and any and all other instruments that may be necessary or appropriate to carry out the powers herein granted;

(c) To register any securities held in the Fund in its own name or in the name of a nominee and to hold any security in bearer form or in book entry, or to combine certificates representing such securities with certificates of the same issue held by the Trustee in other fiduciary capacities, or to deposit or arrange for the deposit of such securities in a qualified central depositary even though, when so deposited, such securities may be merged and held in bulk in the name of the nominee of such depositary with other securities deposited therein by another person, or to deposit or arrange for the deposit of any securities issued by the United States Government, or any agency or instrumentality thereof, with a Federal Reserve bank, but the books and records of the Trustee shall at all times show that all such securities are part of the Fund;

(d) To deposit any cash in the Fund in interest-bearing accounts maintained or savings certificates issued by the Trustee, in its separate corporate capacity, or in any other banking institution affiliated with the Trustee, to the extent insured by an agency of the Federal or State government; and

(e) To compromise or otherwise adjust all claims in favor of or against the Fund.

Section 9. Taxes and Expenses. All taxes of any kind that may be assessed or levied against or in respect of the Fund and all brokerage commissions incurred by the Fund shall be paid from the Fund. All other expenses incurred by the Trustee in connection with the administration of this Trust, including fees for legal services rendered to the Trustee, the compensation of the Trustee to the extent not paid directly by the

or operator's name], as shown on the signed return receipts.

Whenever this letter of credit is drawn on under and in compliance with the terms of this credit, we shall duly honor such draft upon presentation to us, and we shall deposit the amount of the draft directly into the standby trust fund of [owner's or operator's name] in accordance with your instructions.

We certify that the wording of this letter of credit is identical to the wording specified in 40 CFR 264.151(d) as such regulations were constituted on the date shown immediately below.

[Signature(s) and title(s) of official(s) of issuing institution] [Date]

This credit is subject to [insert "the most recent edition of the Uniform Customs and Practice for Documentary Credits, published by the International Chamber of Commerce," or "the Uniform Commercial Code"].

(e) A certificate of insurance, as specified in § 264.143(e) or § 264.145(e) or § 265.143(d) or § 265.145(d) of this chapter, must be worded as follows, except that instructions in brackets are to be replaced with the relevant information and the brackets deleted:

CERTIFICATE OF INSURANCE FOR CLOSURE OR POST-CLOSURE CARE

Name and Address of Insurer (herein called the "Insurer"): _____

Name and Address of Insured (herein called the "Insured"): _____

Facilities Covered: [List for each facility: The EPA Identification Number, name, address, and the amount of insurance for closure and/or the amount for post-closure care (these amounts for all facilities covered must total the face amount shown below).]

Face Amount: _____

Policy Number: _____

Effective Date: _____

The Insurer hereby certifies that it has issued to the Insured the policy of insurance identified above to provide financial assurance for [insert "closure" or "closure and post-closure care" or "post-closure care"] for the facilities identified above. The Insurer further warrants that such policy conforms in all respects with the requirements of 40 CFR 264.143(e), 264.145(e), 265.143(d), and 265.145(d), as applicable and as such regulations were constituted on the date shown immediately below. It is agreed that any provision of the policy inconsistent with such regulations is hereby amended to eliminate such inconsistency.

Whenever requested by the EPA Regional Administrator(s) of the U.S. Environmental Protection Agency, the Insurer agrees to furnish to the EPA Regional Administrator(s) a duplicate original of the policy listed above, including all endorsements thereon.

I hereby certify that the wording of this certificate is identical to the wording specified in 40 CFR 264.151(e) as such regulations were constituted on the date shown immediately below.

[Authorized signature for Insurer]
[Name of person signing]
[Title of person signing]
Signature of witness or notary: _____
[Date]

(f) A letter from the chief financial officer, as specified in § 264.143(f) or § 264.145(f) or § 265.143(e) or § 265.145(e) of this chapter, must be worded as follows, except that instructions in brackets are to be replaced with the relevant information and the brackets deleted:

LETTER FROM CHIEF FINANCIAL OFFICER

[Address to Regional Administrator of every Region in which facilities for which financial responsibility is to be demonstrated through the financial test are located.]

I am the chief financial officer of [name and address of firm]. This letter is in support of this firm's use of the financial test to demonstrate financial assurance, as specified in Subpart H of 40 CFR Parts 264 and 265.

[Fill out the following four paragraphs regarding facilities and associated cost estimates. If your firm has no facilities that belong in a particular paragraph, write "None" in the space indicated. For each facility, include its EPA Identification Number, name, address, and current closure and/or post-closure cost estimates. Identify each cost estimate as to whether it is for closure or post-closure care.]

1. This firm is the owner or operator of the following facilities for which financial assurance for closure or post-closure care is demonstrated through the financial test specified in Subpart H of 40 CFR Parts 264 and 265. The current closure and/or post-closure cost estimates covered by the test are shown for each facility: _____.

2. This firm guarantees, through the corporate guarantee specified in Subpart H of 40 CFR Parts 264 and 265, the closure or post-closure care of the following facilities owned or operated by subsidiaries of this firm. The current cost estimates for the closure or post-closure care so guaranteed are shown for each facility: _____.

3. In States where EPA is not administering the financial requirements of Subpart H of 40 CFR Part 264 or 265, this firm, as owner or operator or guarantor, is demonstrating financial assurance for the closure or post-closure care of the following facilities through the use of a test equivalent or substantially equivalent to the financial test specified in Subpart H of 40 CFR Parts 264 and 265. The current closure and/or post-closure cost estimates covered by such a test are shown for each facility: _____.

4. This firm is the owner or operator of the following hazardous waste management facilities for which financial assurance for closure or, if a disposal facility, post-closure care, is *not* demonstrated either to EPA or a State through the financial test or any other financial assurance mechanism specified in Subpart H of 40 CFR Parts 264 and 265 or equivalent or substantially equivalent State mechanisms. The current closure and/or post-closure cost estimates not covered by such financial assurance are shown for each facility: _____.

This firm [insert "is required" or "is not required"] to file a Form 10K with the Securities and Exchange Commission (SEC) for the latest fiscal year.

The fiscal year of this firm ends on [month, day]. The figures for the following items marked with an asterisk are derived from this firm's independently audited, year-end financial statements for the latest completed fiscal year, ended [date].

[Fill in Alternative I if the criteria of paragraph (f)(1)(i) of § 264.143 or § 264.145, or of paragraph (e)(1)(i) of § 265.143 or § 265.145 of this chapter are used. Fill in Alternative II if the criteria of paragraph (f)(1)(ii) of § 264.143 or § 264.145, or of paragraph (e)(1)(ii) of § 265.143 or § 265.145 of this chapter are used.]

ALTERNATIVE I

1. Sum of current closure and post-closure cost estimates [total of *all* cost estimates shown in the four paragraphs above]	$.....
*2. Total liabilities [if any portion of the closure or post-closure cost estimates is included in total liabilities, you may deduct the amount of that portion from this line and add that amount to lines 3 and 4]	.....
*3. Tangible net worth	.....
*4. Net worth	.....
*5. Current assets	.....
*6. Current liabilities	.....
7. Net working capital [line 5 minus line 6]	.....
*8. The sum of net income plus depreciation, depletion, and amortization	.....
*9. Total assets in U.S. (required only if less than 90% of firm's assets are located in the U.S.)	.....

	Yes	No
10. Is line 3 at least $10 million?	.....	.....
11. Is line 3 at least 6 times line 1?	.....	.....
12. Is line 7 at least 6 times line 1?	.....	.....
*13. Are at least 90% of firm's assets located in the U.S.? If not, complete line 14	.....	.....
14. Is line 9 at least 6 times line 1?	.....	.....
15. Is line 2 divided by line 4 less than 2.0?	.....	.....
16. Is line 8 divided by line 2 greater than 0.1?	.....	.....
17. Is line 5 divided by line 6 greater than 1.5?	.....	.....

ALTERNATIVE II

1. Sum of current closure and post-closure cost estimates [total of *all* cost estimates shown in the four paragraphs above]	$_____
2. Current bond rating of most recent issuance of this firm and name of rating service	_____
3. Date of issuance of bond	_____
4. Date of maturity of bond	_____
*5. Tangible net worth [if any portion of the closure and post-closure cost estimates is included in "total liabilities" on your firm's financial statements, you may add the amount of that portion to this line]	$_____
*6. Total assets in U.S. (required only if less than 90% of firm's assets are located in the U.S.)	$_____

	Yes	No
7. Is line 5 at least $10 million?	.....	.....
8. Is line 5 at least 6 times line 1?	.....	.....
*9. Are at least 90% of firm's assets located in the U.S.? If not, complete line 10	.....	.....
10. Is line 6 at least 6 times line 1?	.....	.....

I hereby certify that the wording of this letter is identical to the wording specified in 40 CFR 264.151(f) as such regulations were constituted on the date shown immediately below.

[Signature]
[Name]
[Title]
[Date]

5. This firm is the owner or operator of the following UIC facilities for which financial assurance for plugging and abandonment is required under Part 144. The current closure cost estimates as required by 40 CFR 144.62 are shown for each facility:

(g) A letter from the chief financial officer, as specified in § 264.147(f) or § 265.147(f) of this chapter, must be worded as follows, except that instructions in brackets are to be replaced with the relevant information and the brackets deleted:

LETTER FROM CHIEF FINANCIAL OFFICER

[Address to Regional Administrator of every Region in which facilities for which financial responsibility is to be demonstrated through the financial test are located.]

by an EPA Regional Administrator or a U.S. district court or other court of competent jurisdiction.

(c) A surety bond guaranteeing performance of closure and/or post-closure care, as specified in § 264.143(c) or § 264.145(c), must be worded as follows, except that the instructions in brackets are to be replaced with the relevant information and the brackets deleted:

PERFORMANCE BOND

Date bond executed: _____

Effective date: _____

Principal: [legal name and business address of owner or operator]

Type of organization: [insert "individual," "joint venture," "partnership," or "corporation"]

State of incorporation: _____

Surety(ies): [name(s) and business address(es)] _____

EPA Identification Number, name, address, and closure and/or post-closure amount(s) for each facility guaranteed by this bond [indicate closure and post-closure amounts separately]:——

Total penal sum of bond: $ _____

Surety's bond number: _____

Know All Persons By These Presents, That we, the Principal and Surety(ies) hereto are firmly bound to the U.S. Environmental Protection Agency (hereinafter called EPA), in the above penal sum for the payment of which we bind ourselves, our heirs, executors, administrators, successors, and assigns jointly and severally; provided that, where the Surety(ies) are corporations acting as co-sureties, we, the Sureties, bind ourselves in such sum "jointly and severally" only for the purpose of allowing a joint action or actions against any or all of us, and for all other purposes each Surety binds itself, jointly and severally with the Principal, for the payment of such sum only as is set forth opposite the name of such Surety, but if no limit of liability is indicated, the limit of liability shall be the full amount of the penal sum.

Whereas said Principal is required, under the Resource Conservation and Recovery Act as amended (RCRA), to have a permit in order to own or operate each hazardous waste management facility indentified above, and

Whereas said Principal is required to provide financial assurance for closure, or closure and post-closure care, as a condition of the permit, and

Whereas said Principal shall establish a standby trust fund as is required when a surety bond is used to provide such financial assurance;

Now, Therefore, the conditions of this obligation are such that if the Principal shall faithfully perform closure, whenever required to do so, of each facility for which this bond guarantees closure, in accordance with the closure plan and other requirements of the permit as such plan and permit may be amended, pursuant to all applicable laws, statutes, rules, and regulations, as such laws, statutes, rules, and regulations may be amended,

And, if the Principal shall faithfully perform post-closure care of each facility for which this bond guarantees post-closure care, in accordance with the post-closure plan and other requirements of the permit, as such plan and permit may be amended, pursuant to all applicable laws, statutes, rules, and regulations, as such laws, statutes, rules, and regulations may be amended,

Or, if the Principal shall provide alternate financial assurance as specified in Subpart H of 40 CFR Part 264, and obtain the EPA Regional Administrator's written approval of such assurance, within 90 days after the date notice of cancellation is received by both the Principal and the EPA Regional Administrator(s) from the Surety(ies), then this obligation shall be null and void, otherwise it is to remain in full force and effect.

The Surety(ies) shall become liable on this bond obligation only when the Principal has failed to fulfill the conditions described above.

Upon notification by an EPA Regional Administrator that the Principal has been found in violation of the closure requirements of 40 CFR Part 264, for a facility for which this bond guarantees performance of closure, the Surety(ies) shall either perform closure in accordance with the closure plan and other permit requirements or place the closure amount guaranteed for the facility into the standby trust fund as directed by the EPA Regional Administrator.

Upon notification by an EPA Regional Administrator that the Principal has been found in violation of the post-closure requirements of 40 CFR Part 264 for a facility for which this bond guarantees performance of post-closure care, the Surety(ies) shall either perform post-closure care in accordance with the post-closure plan and other permit requirements or place the post-closure amount guaranteed for the facility into the standby trust fund as directed by the EPA Regional Administrator.

Upon notification by an EPA Regional Administrator that the Principal has failed to provide alternate financial assurance as specified in Subpart H of 40 CFR Part 264, and obtain written approval of such assurance from the EPA Regional Administrator(s) during the 90 days following receipt by both the Principal and the EPA Regional Administrator(s) of a notice of cancellation of the bond, the Surety(ies) shall place funds in the amount guaranteed for the facility(ies) into the standby trust fund as directed by the EPA Regional Administrator.

The surety(ies) hereby waive(s) notification of amendments to closure plans, permits, applicable laws, statutes, rules, and regulations and agrees that no such amendment shall in any way alleviate its (their) obligation on this bond.

The liability of the Surety(ies) shall not be discharged by any payment or succession of payments hereunder, unless and until such payment or payments shall amount in the aggregate to the penal sum of the bond, but in no event shall the obligation of the Surety(ies) hereunder exceed the amount of said penal sum.

The Surety(ies) may cancel the bond by sending notice of cancellation by certified mail to the owner or operator and to the EPA Regional Administrator(s) for the Region(s) in which the facility(ies) is (are) located, provided, however, that cancellation shall not occur during the 120 days beginning on the date of receipt of the notice of cancellation by both the Principal and the EPA Regional Administrator(s), as evidenced by the return receipts.

The principal may terminate this bond by sending written notice to the Surety(ies), provided, however, that no such notice shall become effective until the Surety(ies) receive(s) written authorization for termination of the bond by the EPA Regional Administrator(s) of the EPA Region(s) in which the bonded facility(ies) is (are) located.

[The following paragraph is an *optional* rider that may be included but is not required.]

Principal and Surety(ies) hereby agree to adjust the penal sum of the bond yearly so that it guarantees a new closure and/or post-closure amount, provided that the penal sum does not increase by more than 20 percent in any one year, and no decrease in the penal sum takes place without the written permission of the EPA Regional Administrator(s).

In Witness Whereof, The Principal and Surety(ies) have executed this Performance Bond and have affixed their seals on the date set forth above.

The persons whose signatures appear below hereby certify that they are authorized to execute this surety bond on behalf of the Principal and Surety(ies) and that the wording of this surety bond is identical to the wording specified in 40 CFR 264.151(c) as such regulation was constituted on the date this bond was executed.

Principal

[Signature(s)]

[Name(s)]

[Title(s)]

[Corporate seal]

Corporate Surety(ies)

[Name and address]

State of incorporation: _____

Liability limit: $ _____

[Signature(s)]

[Name(s) and title(s)]

[Corporate seal]

[For every co-surety, provide signature(s), corporate seal, and other information in the same manner as for Surety above.]

Bond premium: $ _____

(d) A letter of credit, as specified in § 264.143(d) or § 264.145(d) or § 265.143(c) or § 265.145(c) of this chapter, must be worded as follows, except that instructions in brackets are to be replaced with the relevant information and the brackets deleted:

IRREVOCABLE STANDBY LETTER OF CREDIT

Regional Administrator(s)
Region(s) _____
U.S. Environmental Protection Agency

Dear Sir or Madam: We hereby establish our Irrevocable Standby Letter of Credit No.—— in your favor, at the request and for the account of [owner's or operator's name and address] up to the aggregate amount of [in words] U.S. dollars $——, available upon presentation [insert, if more than one Regional Administrator is a beneficiary, "by any one of you"] of

(1) your sight draft, bearing reference to this letter of credit No.——, and

(2) your signed statement reading as follows: "I certify that the amount of the draft is payable pursuant to regulations issued under authority of the Resource Conservation and Recovery Act of 1976 as amended."

This letter of credit is effective as of [date] and shall expire on [date at least 1 year later], but such expiration date shall be automatically extended for a period of [at least 1 year] on [date] and on each successive expiration date, unless, at least 120 days before the current expiration date, we notify both you and [owner's or operator's name] by certified mail that we have decided not to extend this letter of credit beyond the current expiration date. In the event you are so notified, any unused portion of the credit shall be available upon presentation of your sight draft [illegible] 120 days after the date of receipt by both you and [owner's

to as guarantor. This guarantee is made on behalf of our subsidiary [owner or operator] of [business address], to any and all third parties who have sustained or may sustain bodily injury or property damage caused by [sudden and/or nonsudden] accidental occurrences arising from operation of the facility(ies) covered by this guarantee.

RECITALS

1. Guarantor meets or exceeds the financial test criteria and agrees to comply with the reporting requirements for guarantors as specified in 40 CFR 264.147(g) and 265.147(g).

2. [Owner or operator] owns or operates the following hazardous waste management facility(ies) covered by this guarantee: [List for each facility: EPA Identification Number, name, and address; and if guarantor is incorporated outside the United States list the name and address of the guarantor's registered agent in each State.] This corporate guarantee satisfies RCRA third-party liability requirements for [insert "sudden" or "nonsudden" or "both sudden and nonsudden"] accidental occurrences in above-named owner or operator facilities for coverage in the amount of [insert dollar amount] for each occurrence and [insert dollar amount] annual aggregate.

3. For value received from [owner or operator], guarantor guarantees to any and all third parties who have sustained or may sustain bodily injury or property damage caused by [sudden and/or nonsudden] accidental occurrences arising from operations of the facility(ies) covered by this guarantee that in the event that [owner or operator] fails to satisfy a judgment or award based on a determination of liability for bodily injury or property damage to third parties caused by [sudden and/or nonsudden] accidental occurrences, arising from the operation of the above-named facilities, or fails to pay an amount agreed to in settlement of a claim arising from or alleged to arise from such injury or damage, the guarantor will satisfy such judgment(s), award(s) or settlement agreement(s) up to the limits of coverage identified above.

4. Guarantor agrees that if, at the end of any fiscal year before termination of this guarantee, the guarantor fails to meet the financial test criteria, guarantor shall send within 90 days, by certified mail, notice to the EPA Regional Administrator[s] for the Region[s] in which the facility[ies] is[are] located and to [owner or operator] that he intends to provide alternate liability coverage as specified in 40 CFR 264.147 and 265.147, as applicable, in the name of [owner or operator]. Within 120 days after the end of such fiscal year, the guarantor shall establish such liability coverage unless [owner or operator] has done so.

5. The guarantor agrees to notify the EPA Regional Administrator by certified mail of a voluntary or involuntary proceeding under Title 11 (Bankruptcy), U.S. Code, naming guarantor as debtor, within 10 days after commencement of the proceeding.

6. Guarantor agrees that within 30 days after being notified by an EPA Regional Administrator of a determination that guarantor no longer meets the financial test criteria or that he is disallowed from continuing as a guarantor, he shall establish alternate liability coverage as specified in 40 CFR 264.147 or 265.147 in the name of [owner or operator], unless [owner or operator] has done so.

7. Guarantor reserves the right to modify this agreement to take into account amendment or modification of the liability requirements set by 40 CFR 264.147 and 265.147, provided that such modification shall become effective only if a Regional Administrator does not disapprove the modification within 30 days of receipt of notification of the modification.

8. Guarantor agrees to remain bound under this guarantee for so long as [owner or operator] must comply with the applicable requirements of 40 CFR 264.147 and 265.147 for the above-listed facility(ies) except as provided in paragraph 9 of this agreement.

9. Guarantor may terminate this guarantee by sending notice by certified mail to the EPA Regional Administrator[s] for the Region[s] in which the facility[ies] is[are] located and to [owner or operator], provided that this guarantee may not be terminated unless and until [the owner or operator] obtains, and the EPA Regional Administrator[s] approve[s] alternate liability coverage complying with 40 CFR 264.147 and/or 265.147.

10. Guarantor hereby expressly waives notice of acceptance of this guarantee by any party.

11. Guarantor agrees that this guarantee is in addition to and does not affect any other responsibility or liability of the guarantor with respect to the covered facilities.

12. Exclusions

This corporate guarantee does not apply to:

(i) Bodily injury or property damage for which the owner or operator is obligated to pay damages by reason of the assumption of liability in a contract or agreement. This exclusion does not apply to liability for damages that the owner or operator would be obligated to pay in the absence of the contract or agreement.

(ii) Any obligation of the owner or operator under a workers' compensation, disability benefits, or unemployment compensation law or any similar law.

(iii) Bodily injury to

[A] An employee of the owner or operator arising from, and in the course of, employment by the owner or operator; or

[B] The spouse, child, parent, brother or sister of that employeee as a consequence of, or arising from, and in the course of, employment by the owner or operator.

This exclusion applies:

[1] Whether the owner or operator may be liable as an employer or in any other capacity; and

[2] To any obligation to share damages with or repay another person who must pay damages because of the injury to persons identified in paragraphs [A] and [B].

(iv) Bodily injury or property damage arising out of the ownership, maintenance, use, or entrustment to others of any aircraft, motor vehicle or watercraft.

(v) Property damage to:

[A] Any property owned, rented, or occupied by the owner or operator;

[B] Premises that are sold, given away or abandoned by the owner or operator if the property damage arises out of any part of those premises;

[C] Property loaned to the owner or operator;

[D] Personal property in the care, custody or control of the owner or operator;

[E] That particular part of real property on which the owner or operator or any contractors or subcontractors working directly or indirectly on behalf of the owner or operator are performing operations, if the property damage arises out of these operations.

I hereby certify that the wording of the guarantee is identical to the wording specified in 40 CFR 264.151(h)(2).

Effective date: _____

[Name of guarantor]

[Authorized signature for guarantor]

[Name of person signing]

[Title of person signing]

Signature of witness or notary:

(i) A hazardous waste facility liability endorsement as required in § 264.147 or § 265.147 must be worded as follows, except that instructions in brackets are to be replaced with the relevant information and the brackets deleted:

HAZARDOUS WASTE FACILITY LIABILITY ENDORSEMENT

1. This endorsement certifies that the policy to which the endorsement is attached provides liability insurance covering bodily injury and property damage in connection with the insured's obligation to demonstrate financial responsibility under 40 CFR 264.147 or 265.147. The coverage applies at [list EPA Identification Number, name, and address for each facility] for [insert "sudden accidental occurrences," "nonsudden accidental occurrences," or "sudden and nonsudden accidental occurrences"; if coverage is for multiple facilities and the coverage is different for different facilities, indicate which facilities are insured for sudden accidental occurrences, which are insured for nonsudden accidental occurrences, and which are insured for both]. The limits of liability are [insert the dollar amount of the "each occurrence" and "annual aggregate" limits of the Insurer's liability], exclusive of legal defense costs.

2. The insurance afforded with respect to such occurrences is subject to all of the terms and conditions of the policy; provided, however, that any provisions of the policy inconsistent with subsections (a) through (e) of this Paragraph 2 are hereby amended to conform with subsections (a) through (e):

(a) Bankruptcy or insolvency of the insured shall not relieve the Insurer of its obligations under the policy to which this endorsement is attached.

(b) The Insurer is liable for the payment of amounts within any deductible applicable to the policy, with a right of reimbursement by the insured for any such payment made by the Insurer. This provision does not apply with respect to that amount of any deductible for which coverage is demonstrated as specified in 40 CFR 264.147(f) or 265.147(f).

(c) Whenever requested by a Regional Administrator of the U.S. Environmental Protection Agency (EPA), the Insurer agrees to furnish to the Regional Administrator a signed duplicate original of the policy and all endorsements.

(d) Cancellation of this endorsement, whether by the Insurer or the insured, will be effective only upon written notice and only after the expiration of sixty (60) days after a copy of such written notice is received by the Regional Administrator(s) of the EPA Region(s) in which the facility(ies) is (are) located.

(e) Any other termination of this endorsement will be effective only upon written notice and only after the expiration of thirty (30) days after a copy of such written notice is received by the Regional Administrator(s) of the EPA Region(s) in which the facility(ies) is (are) located.

Attached to and forming part of policy No. ——— issued by [name of Insurer], herein called the Insurer, of [address of Insurer] to [name of insured] of [address] this — day of ———, 19—. The effective date of said policy is — day of ———, 19—.

I hereby certify that the wording of this endorsement is identical to the wording specified in 40 CFR 264.151(i) as such regulation was constituted on the date first above written, and that the Insurer is licensed to transact the business of insurance,

I am the chief financial officer of [firm's name and address]. This letter is in support of the use of the financial test to demonstrate financial responsibility for liability coverage [insert "and closure and/or post-closure care" if applicable] as specified in Subpart H of 40 CFR Parts 264 and 265.

[Fill out the following paragraphs regarding facilities and liability coverage. If there are no facilities that belong in a particular paragraph, write "None" in the space indicated. For each facility, include its EPA Identification Number, name, and address.]

The firm identified above is the owner or operator of the following facilities for which liability coverage for [insert "sudden" or "nonsudden" or "both sudden and nonsudden"] accidental occurrences is being demonstrated through the financial test specified in Subpart H of 40 CFR Parts 264 and 265:_____.

The firm identified above guarantees, through the corporate guarantee specified in Subpart H of 40 CFR Parts 264 and 265, liability coverage for [insert "sudden" or "nonsudden" or "both sudden and nonsudden"] accidental occurrences at the following facilities owned or operated by the following subsidiaries of the firm:_____.

[If you are using the financial test to demonstrate coverage of both liability and closure and post-closure care, fill in the following four paragraphs regarding facilities and associated closure and post-closure cost estimates. If there are no facilities that belong in a particular paragraph, write "None" in the space indicated. For each facility, include its EPA Identification Number, name, address, and current closure and/or post-closure cost estimates. Identify each cost estimate as to whether it is for closure or post-closure care.]

1. The firm identified above owns or operates the following facilities for which financial assurance for closure or post-closure care is demonstrated through the financial test specified in Subpart H of 40 CFR Parts 264 and 265. The current closure and/or post-closure cost estimates covered by the test are shown for each facility:_____.

2. The firm identified above guarantees, through the corporate guarantee specified in Subpart H of 40 CFR Parts 264 and 265, the closure and post-closure care of the following facilities owned or operated by its subsidiaries. The current cost estimates for the closure or post-closure care so guaranteed are shown for each facility:_____.

3. In States where EPA is not administering the financial requirements of Subpart H of 40 CFR Parts 264 and 265, this firm is demonstrating financial assurance for the closure or post-closure care of the following facilities through the use of a test equivalent or substantially equivalent to the financial test specified in Subpart H of 40 CFR Parts 264 and 265. The current closure or post-closure cost estimates covered by such a test are shown for each facility:_____.

4. The firm identified above owns or operates the following hazardous waste management facilities for which financial assurance for closure or, if a disposal facility, post-closure care, is not demonstrated either to EPA or a State through the financial test or any other financial assurance mechanisms specified in Subpart H of 40 CFR Parts 264 and 265 or equivalent or substantially equivalent State mechanisms. The current closure and/or post-closure cost estimates not covered by such financial assurance are shown for each facility:_____.

5. This firm is the owner or operator of the following UIC facilities for which financial assurance for plugging and abandonment is required under Part 144. The current closure cost estimates as required by 40 CFR 144.62 are shown for each facility:_____.

This firm [insert "is required" or "is not required"] to file a Form 10K with the Securities and Exchange Commission (SEC) for the latest fiscal year.

The fiscal year of this form ends on [month, day]. The figures for the following items marked with an asterisk are derived from this firm's independently audited, year-end financial statements for the latest completed fiscal year, ended [date].

(h)(1) A corporate guarantee, as specified in § 264.143(f) or § 264.145(f) or § 265.143(e) or § 265.145(e) of this chapter, must be worded as follows, except that instructions in brackets are to be replaced with the relevant information and the brackets deleted:

CORPORATE GUARANTEE FOR CLOSURE OR POST-CLOSURE CARE

Guarantee made this [date] by [name of guaranteeing entity], a business corporation organized under the laws of the State of [insert name of State], herein referred to as guarantor, to the United States Environmental Protection Agency (EPA), obligee, on behalf of our subsidiary [owner or operator] of [business address].

Recitals

1. Guarantor meets or exceeds the financial test criteria and agrees to comply with the reporting requirements for guarantors as specified in 40 CFR 264.143(f), 264.145(f), 265.143(e), and 265.145(e).

2. [Owner or operator] owns or operates the following hazardous waste management facility(ies) covered by this guarantee: [List for each facility: EPA Identification Number, name, and address. Indicate for each whether guarantee is for closure, post-closure care, or both.]

3. "Closure plans" and "post-closure plans" as used below refer to the plans maintained as required by Subpart G of 40 CFR Parts 264 and 265 for the closure and post-closure care of facilities as identified above.

4. For value received from [owner or operator], guarantor guarantees to EPA that in the event that [owner or operator] fails to perform [insert "closure," "post-closure care" or "closure and post-closure care"] of the above facility(ies) in accordance with the closure or post-closure plans and other permit or interim status requirements whenever required to do so, the guarantor shall do so or establish a trust fund as specified in Subpart H of 40 CFR Part 264 or 265, as applicable, in the name of [owner or operator] in the amount of the current closure or post-closure cost estimates as specified in Subpart H of 40 CFR Parts 264 and 265.

5. Guarantor agrees that if, at the end of any fiscal year before termination of this guarantee, the guarantor fails to meet the financial test criteria, guarantor shall send within 90 days, by certified mail, notice to the EPA Regional Administrator(s) for the Region(s) in which the facility(ies) is (are) located and to [owner or operator] that he intends to provide alternate financial assurance as specified in Subpart H of 40 CFR Part 264 or 265, as applicable, in the name of [owner or operator]. Within 120 days after the end of such fiscal year, the guarantor shall establish such financial assurance unless [owner or operator] has done so.

6. The guarantor agrees to notify the EPA Regional Administrator by certified mail, of a voluntary or involuntary proceeding under Title 11 (Bankruptcy), U.S. Code, naming guarantor as debtor, within 10 days after commencement of the proceeding.

7. Guarantor agrees that within 30 days after being notified by an EPA Regional Administrator of a determination that guarantor no longer meets the financial test criteria or that he is disallowed from continuing as a guarantor of closure or post-closure care, he shall establish alternate financial assurance as specified in Subpart H of 40 CFR Part 264 or 265, as applicable, in the name of [owner or operator] unless [owner or operator] has done so.

8. Guarantor agrees to remain bound under this guarantee notwithstanding any or all of the following: amendment or modification of the closure or post-closure plan, amendment or modification of the permit, the extension or reduction of the time of performance of closure or post-closure, or any other modification or alteration of an obligation of the owner or operator pursuant to 40 CFR Part 264 or 265.

9. Guarantor agrees to remain bound under this guarantee for so long as [owner or operator] must comply with the applicable financial assurance requirements of Subpart H of 40 CFR Parts 264 and 265 for the above-listed facilities, except that guarantor may cancel this guarantee by sending notice by certified mail to the EPA Regional Administrator(s) for the Region(s) in which the facility(ies) is (are) located and to [owner or operator], such cancellation to become effective no earlier than 120 days after receipt of such notice by both EPA and [owner or operator], as evidenced by the return receipts.

10. Guarantor agrees that if [owner or operator] fails to provide alternate financial assurance as specified in Subpart H of 40 CFR Part 264 or 265, as applicable, and obtain written approval of such assurance from the EPA Regional Administrator(s) within 90 days after a notice of cancellation by the guarantor is received by an EPA Regional Administrator from guarantor, guarantor shall provide such alternate financial assurance in the name of [owner or operator].

11. Guarantor expressly waives notice of acceptance of this guarantee by the EPA or by [owner or operator]. Guarantor also expressly waives notice of amendments or modifications of the closure and/or post-closure plan and of amendments or modifications of the facility permit(s).

I hereby certify that the wording of this guarantee is identical to the wording specified in 40 CFR 264.151(h) as such regulations were constitituted on the date first above written.

Effective date: _____

[Name of guarantor]

[Authorized signature for guarantor]

[Name of person signing]

[Title of person signing]

Signature of witness or notary: _____

(2) A corporate guarantee, as specified in § 264.147(g) or § 265.147(g) of this chapter, must be worded as follows, except that instructions in brackets are to be replaced with the relevant information and the brackets deleted:

CORPORATE GUARANTEE FOR LIABILITY COVERAGE

Guarantee made this [date] by [name of guaranteeing entity], a business corporation organized under the laws of [if incorporated within the United States insert "the State of ——" and insert name of State; if incorporated outside the United States insert the name of the country in which incorporated, the principal place of business within the United States, and the name and address of the registered agent in the State of the principal place of business], herein referred

have a containment system defined by paragraph (b) of this section:

(1) FO20, FO21, FO22, FO23, FO26, and FO27.

(2) [Reserved]

[46 FR 55112, Nov. 6, 1981, as amended at 50 FR 2003, Jan. 14, 1985]

§ 264.176 Special requirements for ignitable or reactive waste.

Containers holding ignitable or reactive waste must be located at least 15 meters (50 feet) from the facility's property line.

[*Comment:* See § 264.17(a) for additional requirements.]

§ 264.177 Special requirements for incompatible wastes.

(a) Incompatible wastes, or incompatible wastes and materials (see Appendix V for examples), must not be placed in the same container, unless § 264.17(b) is complied with.

(b) Hazardous waste must not be placed in an unwashed container that previously held an incompatible waste or material.

[*Comment:* As required by § 264.13, the waste analysis plan must include analyses needed to comply with § 264.177. Also, § 264.17(c) requires wastes analyses, trial tests or other documentation to assure compliance with § 264.17(b). As required by § 264.73, the owner or operator must place the results of each waste analysis and trial test, and any documented information, in the operating record of the facility.]

(c) A storage container holding a hazardous waste that is incompatible with any waste or other materials stored nearby in other containers, piles, open tanks, or surface impoundments must be separated from the other materials or protected from them by means of a dike, berm, wall, or other device.

[*Comment:* The purpose of this section is to prevent fires, explosions, gaseous emission, leaching, or other discharge of hazardous waste or hazardous waste constituents which could result from the mixing of incompatible wastes or materials if containers break or leak.]

§ 264.178 Closure.

At closure, all hazardous waste and hazardous waste residues must be removed from the containment system. Remaining containers, liners, bases, and soil containing or contaminated with hazardous waste or hazardous waste residues must be decontaminated or removed.

[*Comment:* At closure, as throughout the operating period, unless the owner or operator can demonstrate in accordance with § 261.3(d) of this chapter that the solid waste removed from the containment system is not a hazardous waste, the owner or operator becomes a generator of hazardous waste and must manage it in accordance with all applicable requirements of Parts 262 through 266 of this chapter].

Subpart J—Tank Systems

SOURCE: 51 FR 25472, July 14, 1986, unless otherwise noted.

§ 264.190 Applicability.

The requirements of this Subpart apply to owners and operators of facilities that use tank systems for storing or treating hazardous waste except as otherwise provided in paragraphs (a) and (b) of this section or in § 264.1 of this part.

(a) Tanks that are used to store or treat hazardous waste which contains no free liquids and are situated inside a building with an impermeable floor are exempted from the requirements in § 264.193. To demonstrate the absence or presence of free liquids in the stored/treated waste, EPA Method 9095 (Paint Filter Liquids Test) as described in "Test Methods for Evaluating Solid Wastes, Physical/Chemical Methods" (EPA Publication No. SW-846) must be used.

(b) Tanks, including sumps, as defined in § 260.10, that serve as part of a secondary containment system to collect or contain releases of hazardous wastes are exempted from the requirements in § 264.193 of this subpart.

(Information collection requirement contained in paragraph (a) was approved by the Office of Management and Budget under control number 2050-0050)

[51 FR 25472, July 14, 1986; 51 FR 29430, Aug. 15, 1986]

§ 264.191 Assessment of existing tank system's integrity.

(a) For each existing tank system that does not have secondary containment meeting the requirements of § 264.193, the owner or operator must determine that the tank system is not leaking or is unfit for use. Except as provided in paragraph (c) of this section, the owner or operator must obtain and keep on file at the facility a written assessment reviewed and certified by an independent, qualified registered professional engineer, in accordance with § 270.11(d), that attests to the tank system's integrity by January 12, 1988.

(b) This assessment must determine that the tank system is adequately designed and has sufficient structural strength and compatibility with the waste(s) to be stored or treated, to ensure that it will not collapse, rupture, or fail. At a minimum, this assessment must consider the following:

(1) Design standard(s), if available, according to which the tank and ancillary equipment were constructed;

(2) Hazardous characteristics of the waste(s) that have been and will be handled;

(3) Existing corrosion protection measures;

(4) Documented age of the tank system, if available (otherwise, an estimate of the age); and

(5) Results of a leak test, internal inspection, or other tank integrity examination such that:

(i) For non-enterable underground tanks, the assessment must include a leak test that is capable of taking into account the effects of temperature variations, tank end deflection, vapor pockets, and high water table effects, and

(ii) For other than non-enterable underground tanks and for ancillary equipment, this assessment must include either a leak test, as described above, or other integrity examination, that is certified by an independent, qualified, registered professional engineer in accordance with § 270.11(d), that addresses cracks, leaks, corrosion, and erosion.

[NOTE: The practices described in the American Petroleum Institute (API) Publication, Guide for Inspection of Refinery Equipment, Chapter XIII, "Atmospheric and Low-Pressure Storage Tanks," 4th edition, 1981, may be used, where applicable, as guidelines in conducting other than a leak test.]

(c) Tank systems that store or treat materials that become hazardous wastes subsequent to July 14, 1986, must conduct this assessment within 12 months after the date that the waste becomes a hazardous waste.

(d) If, as a result of the assessment conducted in accordance with paragraph (a), a tank system is found to be leaking or unfit for use, the owner or operator must comply with the requirements of § 264.196.

(Information collection requirements contained in paragraphs (a) through (d) were approved by the Office of Management and Budget under control number 2050-0050.)

[51 FR 25472, July 14, 1986; 51 FR 29430, Aug. 15, 1986]

§ 264.192 Design and installation of new tank systems or components.

(a) Owners or operators of new tank systems or components must obtain and submit to the Regional Administrator, at time of submittal of Part B information, a written assessment, reviewed and certified by an independent, qualified registered professional engineer, in accordance with § 270.11(d), attesting that the tank system has sufficient structural integrity and is acceptable for the storing and treating of hazardous waste. The assessment must show that the foundation, structural support, seams, connections, and pressure controls (if applicable) are adequately designed and that the tank system has sufficient structural strength, compatibility with the waste(s) to be stored or treated, and corrosion protection to ensure that it will not collapse, rupture, or fail. This assessment, which will be used by the Regional Administrator to review and approve or disapprove the acceptability of the tank system design, must include, at a minimum, the following information:

(1) Design standard(s) according to which tank(s) and/or the ancillary equipment are constructed;

(2) Hazardous characteristics of the waste(s) to be handled;

or eligible to provide insurance as an excess or surplus lines insurer, in one or more States.

[Signature of Authorized Representative of Insurer]
[Type name]
[Title], Authorized Representive of [name of Insurer]
[Address of Representative]

(j) A certificate of liability insurance as required in § 264.147 or § 265.147 must be worded as follows, except that the instructions in brackets are to be replaced with the relevant information and the brackets deleted:

HAZARDOUS WASTE FACILITY CERTIFICATE OF LIABILITY INSURANCE

1. [Name of Insurer], (the "Insurer"), of [address of Insurer] hereby certifies that it has issued liability insurance covering bodily injury and property damage to [name of insured], (the "insured"), of [address of insured] in connection with the insured's obligation to demonstrate financial responsibility under 40 CFR 264.147 or 265.147. The coverage applies at [list EPA Identification Number, name, and address for each facility] for [insert "sudden accidental occurrences," "nonsudden accidental occurrences," or "sudden and nonsudden accidental occurrences"; if coverage is for multiple facilities and the coverage is different for different facilities, indicate which facilities are insured for sudden accidental occurrences, which are insured for nonsudden accidental occurrences, and which are insured for both]. The limits of liability are [insert the dollar amount of the "each occurrence" and "annual aggregate" limits of the Insurer's liability], exclusive of legal defense costs. The coverage is provided under policy number ——, issued on [date]. The effective date of said policy is [date].

2. The Insurer further certifies the following with respect to the insurance described in Paragraph 1:

(a) Bankruptcy or insolvency of the insured shall not relieve the Insurer of its obligations under the policy.

(b) The Insurer is liable for the payment of amounts within any deductible applicable to the policy, with a right of reimbursement by the insured for any such payment made by the Insurer. This provision does not apply with respect to that amount of any deductible for which coverage is demonstrated as specified in 40 CFR 264.147(f) or 265.147(f).

(c) Whenever requested by a Regional Administrator of the U.S. Environmental Protection Agency (EPA), the Insurer agrees to furnish to the Regional Administrator a signed duplicate original of the policy and all endorsements.

(d) Cancellation of the insurance, whether by the Insurer or the insured, will be effective only upon written notice and only after the expiration of sixty (60) days after a copy of such written notice is received by the Regional Administrator(s) of the EPA Region(s) in which the facility(ies) is (are) located.

(e) Any other termination of the insurance will be effective only upon written notice and only after the expiration of thirty (30) days after a copy of such written notice is received by the Regional Administrator(s) of the EPA Region(s) in which the facility(ies) is (are) located.

I hereby certify that the wording of this instrument is identical to the wording specified in 40 CFR 264.151(j) as such regulation was constituted on the date first above written, and that the Insurer is licensed to transact the business of insurance, or eligible to provide insurance as an excess or surplus lines insurer, in one or more States.

[Signature of authorized representative of Insurer]
[Type name]
[Title], Authorized Representative of [name of Insurer]
[Address of Representative]

(Approved by the Office of Management and Budget under control number 2000-0445, for paragraphs (g), (i), and (j))

[47 FR 15059, Apr. 7, 1982, as amended at 47 FR 16556, Apr. 16, 1982; 47 FR 17989, Apr. 27, 1982; 47 FR 19995, May 10, 1982; 47 FR 28627, July 1, 1982; 51 FR 16450, May 2, 1986; 51 FR 25354, July 11, 1986; 52 FR 44320, Nov. 18, 1987]

Subpart I—Use and Management of Containers

SOURCE: 46 FR 2866, Jan. 12, 1981, unless otherwise noted.

§ 264.170 Applicability.

The regulations in this subpart apply to owners and operators of all hazardous waste facilities that store containers of hazardous waste, except as § 264.1 provides otherwise.

[*Comment:* Under § 261.7 and § 261.33(c), if a hazardous waste is emptied from a container the residue remaining in the container is not considered a hazardous waste if the container is "empty" as defined in § 261.7. In that event, management of the container is exempt from the requirements of this subpart.]

§ 264.171 Condition of containers.

If a container holding hazardous waste is not in good condition (e.g., severe rusting, apparent structural defects) or if it begins to leak, the owner or operator must transfer the hazardous waste from this container to a container that is in good condition or manage the waste in some other way that complies with the requirements of this part.

§ 264.172 Compatibility of waste with containers.

The owner or operator must use a container made of or lined with materials which will not react with, and are otherwise compatible with, the hazardous waste to be stored, so that the ability of the container to contain the waste is not impaired.

§ 264.173 Management of containers.

(a) A container holding hazardous waste must always be closed during storage, except when it is necessary to add or remove waste.

(b) A container holding hazardous waste must not be opened, handled, or stored in a manner which may rupture the container or cause it to leak.

[*Comment:* Reuse of containers in transportation is governed by U.S. Department of Transportation regulations including those set forth in 49 CFR 173.28.]

§ 264.174 Inspections.

At least weekly, the owner or operator must inspect areas where containers are stored, looking for leaking containers and for deterioration of containers and the containment system caused by corrosion or other factors.

[*Comment:* See §§ 264.15(c) and 264.171 for remedial action required if deterioration or leaks are detected.]

§ 264.175 Containment.

(a) Container storage areas must have a containment system that is designed and operated in accordance with paragraph (b) of this section, except as otherwise provided by paragraph (c) of this section.

(b) A containment system must be designed and operated as follows:

(1) A base must underly the containers which is free of cracks or gaps and is sufficiently impervious to contain leaks, spills, and accumulated precipitation until the collected material is detected and removed;

(2) The base must be sloped or the containment system must be otherwise designed and operated to drain and remove liquids resulting from leaks, spills, or precipitation, unless the containers are elevated or are otherwise protected from contact with accumulated liquids;

(3) The containment system must have sufficient capacity to contain 10% of the volume of containers or the volume of the largest container, whichever is greater. Containers that do not contain free liquids need not be considered in this determination;

(4) Run-on into the containment system must be prevented unless the collection system has sufficient excess capacity in addition to that required in paragraph (b)(3) of this section to contain any run-on which might enter the system; and

(5) Spilled or leaked waste and accumulated precipitation must be removed from the sump or collection area in as timely a manner as is necessary to prevent overflow of the collection system.

[*Comment:* If the collected material is a hazardous waste under Part 261 of this Chapter, it must be managed as a hazardous waste in accordance with all applicable requirements of Parts 262 through 266 of this chapter. If the collected material is discharged through a point source to waters of the United States, it is subject to the requirements of section 402 of the Clean Water Act, as amended.]

(c) Storage areas that store containers holding only wastes that do not contain free liquids need not have a containment system defined by paragraph (b) of this section, except as provided by paragraph (d) of this section or provided that:

(1) The storage area is sloped or is otherwise designed and operated to drain and remove liquid resulting from precipitation, or

(2) The containers are elevated or are otherwise protected from contact with accumulated liquid.

(d) Storage areas that store containers holding the wastes listed below that do not contain free liquids must

(2) Placed on a foundation or base capable of providing support to the secondary containment system, resistance to pressure gradients above and below the system, and capable of preventing failure due to settlement, compression, or uplift;

(3) Provided with a leak-detection system that is designed and operated so that it will detect the failure of either the primary or secondary containment structure or the presence of any release of hazardous waste or accumulated liquid in the secondary containment system within 24 hours, or at the earliest practicable time if the owner or operator can demonstrate to the Regional Administrator that existing detection technologies or site conditions will not allow detection of a release within 24 hours; and

(4) Sloped or otherwise designed or operated to drain and remove liquids resulting from leaks, spills, or precipitation. Spilled or leaked waste and accumulated precipitation must be removed from the secondary containment system within 24 hours, or in as timely a manner as is possible to prevent harm to human health and the environment, if the owner or operator can demonstrate to the Regional Administrator that removal of the released waste or accumulated precipitation cannot be accomplished within 24 hours.

[NOTE: If the collected material is a hazardous waste under Part 261 of this chapter, it is subject to management as a hazardous waste in accordance with all applicable requirements of Parts 262 through 265 of this chapter. If the collected material is discharged through a point source to waters of the United States, it is subject to the requirements of sections 301, 304, and 402 of the Clean Water Act, as amended. If discharged to a Publicly Owned Treatment Works (POTW), it is subject to the requirements of section 307 of the Clean Water Act, as amended. If the collected material is released to the environment, it may be subject to the reporting requirements of 40 CFR Part 302.]

(d) Secondary containment for tanks must include one or more of the following devices:

(1) A liner (external to the tank);

(2) A vault;

(3) A double-walled tank; or

(4) An equivalent device as approved by the Regional Administrator

(e) In addition to the requirements of paragraphs (b), (c), and (d) of this section, secondary containment systems must satisfy the following requirements:

(1) External liner systems must be:

(i) Designed or operated to contain 100 percent of the capacity of the largest tank within its boundary;

(ii) Designed or operated to prevent run-on or infiltration of precipitation into the secondary containment system unless the collection system has sufficient excess capacity to contain run-on or infiltration. Such additional capacity must be sufficient to contain precipitation from a 25-year, 24-hour rainfall event.

(iii) Free of cracks or gaps; and

(iv) Designed and installed to surround the tank completely and to cover all surrounding earth likely to come into contact with the waste if the waste is released from the tank(s) (i.e., capable of preventing lateral as well as vertical migration of the waste).

(2) Vault systems must be:

(i) Designed or operated to contain 100 percent of the capacity of the largest tank within its boundary;

(ii) Designed or operated to prevent run-on or infiltration of precipitation into the secondary containment system unless the collection system has sufficient excess capacity to contain run-on or infiltration. Such additional capacity must be sufficient to contain precipitation from a 25-year, 24-hour rainfall event;

(iii) Constructed with chemical-resistant water stops in place at all joints (if any);

(iv) Provided with an impermeable interior coating or lining that is compatible with the stored waste and that will prevent migration of waste into the concrete;

(v) Provided with a means to protect against the formation of and ignition of vapors within the vault, if the waste being stored or treated:

(A) Meets the definition of ignitable waste under § 262.21 of this chapter; or

(B) Meets the definition of reactive waste under § 262.21 of this chapter, and may form an ignitable or explosive vapor.

(vi) Provided with an exterior moisture barrier or be otherwise designed or operated to prevent migration of moisture into the vault if the vault is subject to hydraulic pressure.

(3) Double-walled tanks must be:

(i) Designed as an integral structure (i.e., an inner tank completely enveloped within an outer shell) so that any release from the inner tank is contained by the outer shell.

(ii) Protected, if constructed of metal, from both corrosion of the primary tank interior and of the external surface of the outer shell; and

(iii) Provided with a built-in continuous leak detection system capable of detecting a release within 24 hours, or at the earliest practicable time, if the owner or operator can demonstrate to the Regional Administrator, and the Regional Administrator concludes, that the existing detection technology or site conditions would not allow detection of a release within 24 hours.

[NOTE: The provisions outlined in the Steel Tank Institute's (STI) "Standard for Dual Wall Underground Steel Storage Tanks" may be used as guidelines for aspects of the design of underground steel double-walled tanks.]

(f) Ancillary equipment must be provided with secondary containment (e.g., trench, jacketing, double-walled piping) that meets the requirements of paragraphs (b) and (c) of this section except for:

(1) Aboveground piping (exclusive of flanges, joints, valves, and other connections) that are visually inspected for leaks on a daily basis;

(2) Welded flanges, welded joints, and welded connections, that are visually inspected for leaks on a daily basis;

(3) Sealless or magnetic coupling pumps, that are visually inspected for leaks on a daily basis; and

(4) Pressurized aboveground piping systems with automatic shut-off devices (e.g., excess flow check valves, flow metering shutdown devices, loss of pressure actuated shut-off devices) that are visually inspected for leaks on a daily basis.

(g) The owner or operator may obtain a variance from the requirements of this section if the Regional Administrator finds, as a result of a demonstration by the owner or operator that alternative design and operating practices, together with location characteristics, will prevent the migration of any hazardous waste or hazardous constituents into the ground water; or surface water at least as effectively as secondary containment during the active life of the tank system *or* that in the event of a release that does migrate to ground water or surface water, no substantial present or potential hazard will be posed to human health or the environment. New underground tank systems may not, per a demonstration in accordance with paragraph (g)(2) of this section, be exempted from the secondary containment requirements of this section.

(1) In deciding whether to grant a variance based on a demonstration of equivalent protection of ground water and surface water, the Regional Administrator will consider:

(i) The nature and quantity of the wastes;

(ii) The proposed alternate design and operation;

(iii) The hydrogeologic setting of the facility, including the thickness of soils present between the tank system and ground water, and

(iv) All other factors that would influence the quality and mobility of the hazardous constituents and the potential for them to migrate to ground water or surface water

(2) In deciding whether to grant a variance based on a demonstration of no substantial present or potential hazard, the Regional Administrator will consider:

(i) The potential adverse effects on ground water, surface water, and land quality taking into account:

(A) The physical and chemical characteristics of the waste in the tank system, including its potential for migration.

(B) The hydrogeological characteristics of the facility and surrounding land,

(C) The potential for health risks caused by human exposure to waste constituents,

(3) For new tank systems or components in which the external shell of a metal tank or any external metal component of the tank system will be in contact with the soil or with water, a determination by a corrosion expert of:

(i) Factors affecting the potential for corrosion, including but not limited to:

(A) Soil moisture content;

(B) Soil pH;

(C) Soil sulfides level;

(D) Soil resistivity;

(E) Structure to soil potential;

(F) Influence of nearby underground metal structures (e.g., piping);

(G) Existence of stray electric current;

(H) Existing corrosion-protection measures (e.g., coating, cathodic protection), and

(ii) The type and degree of external corrosion protection that are needed to ensure the integrity of the tank system during the use of the tank system or component, consisting of one or more of the following:

(A) Corrosion-resistant materials of construction such as special alloys, fiberglass reinforced plastic, etc.;

(B) Corrosion-resistant coating (such as epoxy, fiberglass, etc.) with cathodic protection (e.g., impressed current or sacrificial anodes); and

(C) Electrical isolation devices such as insulating joints, flanges, etc.

[NOTE: The practices described in the National Association of Corrosion Engineers (NACE) standard, "Recommended Practice (RP-02-85)—Control of External Corrosion on Metallic Buried, Partially Buried, or Submerged Liquid Storage Systems," and the American Petroleum Institute (API) Publication 1632, "Cathodic Protection of Underground Petroleum Storage Tanks and Piping Systems," may be used, where applicable, as guidelines in providing corrosion protection for tank systems.]

(4) For underground tank system components that are likely to be adversely affected by vehicular traffic, a determination of design or operational measures that will protect the tank system against potential damage; and

(5) Design considerations to ensure that:

(i) Tank foundations will maintain the load of a full tank;

(ii) Tank systems will be anchored to prevent flotation or dislodgment where the tank system is placed in a saturated zone, or is located within a seismic fault zone subject to the standards of § 264.18(a); and

(iii) Tank systems will withstand the effects of frost heave.

(b) The owner or operator of a new tank system must ensure that proper handling procedures are adhered to in order to prevent damage to the system during installation. Prior to covering, enclosing, or placing a new tank system or component in use, an independent, qualified installation inspector or an independent, qualified, registered professional engineer, either of whom is trained and experienced in the proper installation of tank systems or components, must inspect the system for the presence of any of the following items:

(1) Weld breaks;

(2) Punctures;

(3) Scrapes of protective coatings;

(4) Cracks;

(5) Corrosion;

(6) Other structural damage or inadequate construction/installation.

All discrepancies must be remedied before the tank system is covered, enclosed, or placed in use.

(c) New tank systems or components that are placed underground and that are backfilled must be provided with a backfill material that is a noncorrosive, porous, homogeneous substance and that is installed so that the backfill is placed completely around the tank and compacted to ensure that the tank and piping are fully and uniformly supported.

(d) All new tanks and ancillary equipment must be tested for tightness prior to being covered, enclosed, or placed in use. If a tank system is found not to be tight, all repairs necessary to remedy the leak(s) in the system must be performed prior to the tank system being covered, enclosed, or placed into use.

(e) Ancillary equipment must be supported and protected against physical damage and excessive stress due to settlement, vibration, expansion, or contraction.

[NOTE: The piping system installation procedures described in American Petroleum Institute (API) Publication 1615 (November 1979), "Installation of Underground Petroleum Storage Systems," or ANSI Standard B31.3, "Petroleum Refinery Piping," and ANSI Standard B31.4 "Liquid Petroleum Transportation Piping System," may be used, where applicable, as guidelines for proper installation of piping systems.]

(f) The owner or operator must provide the type and degree of corrosion protection recommended by an independent corrosion expert, based on the information provided under paragraph (a)(3) of this section, or other corrosion protection if the Regional Administrator believes other corrosion protection is necessary to ensure the integrity of the tank system during use of the tank system. The installation of a corrosion protection system that is field fabricated must be supervised by an independent corrosion expert to ensure proper installation.

(g) The owner or operator must obtain and keep on file at the facility written statements by those persons required to certify the design of the tank system and supervise the installation of the tank system in accordance with the requirements of paragraphs (b) through (f) of this section, that attest that the tank system was properly designed and installed and that repairs, pursuant to paragraphs (b) and (d) of this section, were performed. These written statements must also include the certification statement as required in § 270.11(d) of this chapter.

(Information collection requirements contained in paragraphs (a) and (g) were approved by the Office of Management and Budget under control number 2050-0050)

[51 FR 25472, July 14, 1986; 51 FR 29430, Aug. 15, 1986]

§ 264.193 Containment and detection of releases.

(a) In order to prevent the release of hazardous waste or hazardous constituents to the environment, secondary containment that meets the requirements of this section must be provided (except as provided in paragraphs (f) and (g) of this section):

(1) For all new tank systems or components, prior to their being put into service;

(2) For all existing tank systems used to store or treat EPA Hazardous Waste Nos. F020, F021, F022, F023, F026, and F027, within two years after January 12, 1987;

(3) For those existing tank systems of known and documented age, within two years after January 12, 1987 or when the tank system has reached 15 years of age, whichever comes later;

(4) For those existing tank systems for which the age cannot be documented, within eight years of January 12, 1987; but if the age of the facility is greater than seven years, secondary containment must be provided by the time the facility reaches 15 years of age, or within two years of January 12, 1987, whichever comes later; and

(5) For tank systems that store or treat materials that become hazardous wastes subsequent to January 12, 1987, within the time intervals required in paragraphs (a)(1) through (a)(4) of this section, except that the date that a material becomes a hazardous waste must be used in place of January 12, 1987.

(b) Secondary containment systems must be:

(1) Designed, installed, and operated to prevent any migration of wastes or accumulated liquid out of the system to the soil, ground water, or surface water at any time during the use of the tank system; and

(2) Capable of detecting and collecting releases and accumulated liquids until the collected material is removed.

(c) To meet the requirements of paragraph (b) of this section, secondary containment systems must be at a minimum:

(1) Constructed of or lined with materials that are compatible with the wastes(s) to be placed in the tank system and must have sufficient strength and thickness to prevent failure owing to pressure gradients (including static head and external hydrological forces), physical contact with the waste to which it is exposed, climatic conditions, and the stress of daily operation (including stresses from nearby vehicular traffic).

(1) Spill prevention controls (e.g., check valves, dry disconnect couplings);

(2) Overfill prevention controls (e.g., level sensing devices, high level alarms, automatic feed cutoff, or bypass to a standby tank); and

(3) Maintenance of sufficient freeboard in uncovered tanks to prevent overtopping by wave or wind action or by precipitation.

(c) The owner or operator must comply with the requirements of § 264.196 if a leak or spill occurs in the tank system.

[Information collection requirements contained in paragraph (c) were approved by the Office of Management and Budget under control number 2050-0050]

§ 264.195 Inspections.

(a) The owner or operator must develop and follow a schedule and procedure for inspecting overfill controls.

(b) The owner or operator must inspect at least once each operating day:

(1) Aboveground portions of the tank system, if any, to detect corrosion or releases of waste;

(2) Data gathered from monitoring and leak detection equipment (e.g., pressure or temperature gauges, monitoring wells) to ensure that the tank system is being operated according to its design; and

(3) The construction materials and the area immediately surrounding the externally accessible portion of the tank system, including the secondary containment system (e.g., dikes) to detect erosion or signs of releases of hazardous waste (e.g., wet spots, dead vegetation).

[Note: Section 264.15(c) requires the owner or operator to remedy any deterioration or malfunction he finds. Section 264.196 requires the owner or operator to notify the Regional Administrator within 24 hours of confirming a leak. Also, 40 CFR Part 302 may require the owner or operator to notify the National Response Center of a release.]

(c) The owner or operator must inspect cathodic protection systems, if present, according to, at a minimum, the following schedule to ensure that they are functioning properly:

(1) The proper operation of the cathodic protection system must be confirmed within six months after initial installation and annually thereafter; and

(2) All sources of impressed current must be inspected and/or tested, as appropriate, at least bimonthly (i.e., every other month).

[Note: The practices described in the National Association of Corrosion Engineers (NACE) standard, "Recommended Practice (RP-02-85)—Control of External Corrosion on Metallic Buried, Partially Buried, or Submerged Liquid Storage Systems," and the American Petroleum Institute (API) Publication 1632, "Cathodic Protection of Underground Petroleum Storage Tanks and Piping Systems," may be used, where applicable, as guidelines in maintaining and inspecting cathodic protection systems.]

(d) The owner or operator must document in the operating record of the facility an inspection of those items in paragraphs (a) through (c) of this section.

[Information collection requirements contained in paragraph (a) and (d) were approved by the Office of Management and Budget under control number 2050-0050]

§ 264.196 Response to leaks or spills and disposition of leaking or unfit-for-use tank systems.

A tank system or secondary containment system from which there has been a leak or spill, or which is unfit for use, must be removed from service immediately, and the owner or operator must satisfy the following requirements:

(a) *Cessation of use; prevent flow or addition of wastes.* The owner or operator must immediately stop the flow of hazardous waste into the tank system or secondary containment system and inspect the system to determine the cause of the release.

(b) *Removal of waste from tank system or secondary containment system.* (1) If the release was from the tank system, the owner/operator must, within 24 hours after detection of the leak or, if the owner/operator demonstrates that it is not possible, at the earliest practicable time, remove as much of the waste as is necessary to prevent further release of hazardous waste to the environment and to allow inspection and repair of the tank system to be performed.

(2) If the material released was to a secondary containment system, all released materials must be removed within 24 hours or in as timely a manner as is possible to prevent harm to human health and the environment.

(c) *Containment of visible releases to the environment.* The owner/operator must immediately conduct a visual inspection of the release and, based upon that inspection:

(1) Prevent further migration of the leak or spill to soils or surface water; and

(2) Remove, and properly dispose of, any visible contamination of the soil or surface water.

(d) *Notifications, reports.* (1) Any release to the environment, except as provided in paragraph (d)(2) of this section, must be reported to the Regional Administrator within 24 hours of its detection. If the release has been reported pursuant to 40 CFR Part 302, that report will satisfy this requirement.

(2) A leak or spill of hazardous waste is exempted from the requirements of this paragraph if it is:

(i) Less than or equal to a quantity of one (1) pound, and

(ii) Immediately contained and cleaned up.

(3) Within 30 days of detection of a release to the environment, a report containing the following information must be submitted to the Regional Administrator:

(i) Likely route of migration of the release;

(ii) Characteristics of the surrounding soil (soil composition, geology, hydrogeology, climate);

(iii) Results of any monitoring or sampling conducted in connection with the release (if available). If sampling or monitoring data relating to the release are not available within 30 days, these data must be submitted to the Regional Administrator as soon as they become available.

(iv) Proximity to downgradient drinking water, surface water, and populated areas; and

(v) Description of response actions taken or planned.

(e) *Provision of secondary containment, repair, or closure.* (1) Unless the owner/operator satisfies the requirements of paragraphs (e)(2) through (4) of this section, the tank system must be closed in accordance with § 264.197.

(2) If the cause of the release was a spill that has not damaged the integrity of the system, the owner/operator may return the system to service as soon as the released waste is removed and repairs, if necessary, are made.

(3) If the cause of the release was a leak from the primary tank system into the secondary containment system, the system must be repaired prior to returning the tank system to service.

(4) If the source of the release was a leak to the environment from a component of a tank system without secondary containment, the owner/operator must provide the component of the system from which the leak occurred with secondary containment that satisfies the requirements of § 264.193 before it can be returned to service, unless the source of the leak is an aboveground portion of a tank system that can be inspected visually. If the source is an aboveground component that can be inspected visually, the component must be repaired and may be returned to service without secondary containment as long as the requirements of paragraph (f) of this section are satisfied. If a component is replaced to comply with the requirements of this subparagraph, that component must satisfy the requirements for new tank systems or components in §§ 264.192 and 264.193. Additionally, if a leak has occurred in any portion of a tank system component that is not readily accessible for visual inspection (e.g., the bottom of an inground or onground tank), the entire component must be provided with secondary containment in accordance with § 264.193 prior to being returned to use.

(f) *Certification of major repairs.* If the owner/operator has repaired a tank system in accordance with paragraph (e) of this section, and the repair has been extensive (e.g., installation of an internal liner; repair of a ruptured primary containment or secondary containment vessel), the tank system must not be returned to service unless the owner/operator has obtained a certification by an independ-

(D) The potential for damage to wildlife, crops, vegetation, and physical structures caused by exposure to waste constituents, and

(E) The persistence and permanence of the potential adverse effects;

(ii) The potential adverse effects of a release on ground-water quality, taking into account:

(A) The quantity and quality of ground water and the direction of ground-water flow,

(B) The proximity and withdrawal rates of ground-water users,

(C) The current and future uses of ground water in the area, and

(D) The existing quality of ground water, including other sources of contamination and their cumulative impact on the ground-water quality;

(iii) The potential adverse effects of a release on surface water quality, taking into account:

(A) The quantity and quality of ground water and the direction of ground-water flow,

(B) The patterns of rainfall in the region,

(C) The proximity of the tank system to surface waters,

(D) The current and future uses of surface waters in the area and any water quality standards established for those surface waters, and

(E) The existing quality of surface water, including other sources of contamination and the cumulative impact on surface-water quality; and

(iv) The potential adverse effects of a release on the land surrounding the tank system, taking into account:

(A) The patterns of rainfall in the region, and

(B) The current and future uses of the surrounding land.

(3) The owner or operator of a tank system, for which a variance from secondary containment had been granted in accordance with the requirements of paragraph (g)(1) of this section, at which a release of hazardous waste has occurred from the primary tank system but has not migrated beyond the zone of engineering control (as established in the variance), must:

(i) Comply with the requirements of § 264.196, except paragraph (d), and

(ii) Decontaminate or remove contaminated soil to the extent necessary to:

(A) Enable the tank system for which the variance was granted to resume operation with the capability for the detection of releases at least equivalent to the capability it had prior to the release; and

(B) Prevent the migration of hazardous waste or hazardous constituents to ground water or surface water; and

(iii) If contaminated soil cannot be removed or decontaminated in accordance with paragraph (g)(3)(ii) of this section, comply with the requirement of § 264.197(b).

(4) The owner or operator of a tank system, for which a variance from secondary containment had been granted in accordance with the requirements of paragraph (g)(1) of this section, at which a release of hazardous waste has occurred from the primary tank system and has migrated beyond the zone of engineering control (as established in the variance), must:

(i) Comply with the requirements of § 264.196 (a), (b), (c), and (d); and

(ii) Prevent the migration of hazardous waste or hazardous constituents to ground water or surface water, if possible, and decontaminate or remove contaminated soil. If contaminated soil cannot be decontaminated or removed or if ground water has been contaminated, the owner or operator must comply with the requirements of § 264.197(b); and

(iii) If repairing, replacing, or reinstalling the tank system, provide secondary containment in accordance with the requirements of paragraphs (a) through (f) of this section or reapply for a variance from secondary containment and meet the requirements for new tank systems in § 264.192 if the tank system is replaced. The owner or operator must comply with these requirements even if contaminated soil can be decontaminated or removed and ground water or surface water has not been contaminated.

(h) The following procedures must be followed in order to request a variance from secondary containment:

(1) The Regional Administrator must be notified in writing by the owner or operator that he intends to

conduct and submit a demonstration for a variance from secondary containment as allowed in paragraph (g) according to the following schedule:

(i) For existing tank systems, at least 24 months prior to the date that secondary containment must be provided in accordance with paragraph (a) of this section.

(ii) For new tank systems, at least 30 days prior to entering into a contract for installation.

(2) As part of the notification, the owner or operator must also submit to the Regional Administrator a description of the steps necessary to conduct the demonstration and a timetable for completing each of the steps. The demonstration must address each of the factors listed in paragraph (g)(1) or paragraph (g)(2) of this section;

(3) The demonstration for a variance must be completed within 180 days after notifying the Regional Administrator of an intent to conduct the demonstration; and

(4) If a variance is granted under this paragraph, the Regional Administrator will require the permittee to construct and operate the tank system in the manner that was demonstrated to meet the requirements for the variance.

(i) All tank systems, until such time as secondary containment that meets the requirements of this section is provided, must comply with the following:

(1) For non-enterable underground tanks, a leak test that meets the requirements of § 264.191(b)(5) or other tank integrity method, as approved or required by the Regional Administrator, must be conducted at least annually.

(2) For other than non-enterable underground tanks, the owner or operator must either conduct a leak test as in paragraph (i)(1) of this section or develop a schedule and procedure for an assessment of the overall condition of the tank system by an independent, qualified registered professional engineer. The schedule and procedure must be adequate to detect obvious cracks, leaks, and corrosion or erosion that may lead to cracks and leaks. The owner or operator must remove the stored waste from the tank, if necessary, to allow the condition of all internal tank surfaces to be assessed. The frequency of these assessments must be based on the material of construction of the tank and its ancillary equipment, the age of the system, the type of corrosion or erosion protection used, the rate of corrosion or erosion observed during the previous inspection, and the characteristics of the waste being stored or treated.

(3) For ancillary equipment, a leak test or other integrity assessment as approved by the Regional Administrator must be conducted at least annually.

[NOTE: The practices described in the American Petroleum Institute (API) Publication Guide for Inspection of Refinery Equipment, Chapter XIII, "Atmospheric and Low-Pressure Storage Tanks," 4th edition, 1981, may be used, where applicable, as guidelines for assessing the overall condition of the tank system.]

(4) The owner or operator must maintain on file at the facility a record of the results of the assessments conducted in accordance with paragraphs (i)(1) through (i)(3) of this section.

(5) If a tank system or component is found to be leaking or unfit for use as a result of the leak test or assessment in paragraphs (i)(1) through (i)(3) of this section, the owner or operator must comply with the requirements of § 264.196.

(Information collection requirements contained in paragraphs (c), (d), (e), (g), (h), and (i) were approved by the Office of Management and Budget under control number 2050-0050)

[51 FR 25472, July 14, 1986; 51 FR 29430, Aug. 15, 1986]

§ 264.194 General operating requirements.

(a) Hazardous wastes or treatment reagents must not be placed in a tank system if they could cause the tank, its ancillary equipment, or the containment system to rupture, leak, corrode, or otherwise fail.

(b) The owner or operator must use appropriate controls and practices to prevent spills and overflows from tank or containment systems. These include at a minimum:

(3) The hydrogeologic setting of the facility, including the attenuative capacity and thickness of the liners and soils present between the impoundment and ground water or surface water; and

(4) All other factors which would influence the quality and mobility of the leachate produced and the potential for it to migrate to ground water or surface water.

(c) The owner or operator of each new surface impoundment, each new surface impoundment unit at an existing facility, each replacement of an existing surface impoundment unit, and each lateral expansion of an existing surface impoundment unit, must install two or more liners and a leachate collection system between such liners. The liners and leachate collection system must protect human health and the environment. The requirements of this paragraph shall apply with respect to all waste received after the issuance of the permit. The requirement for the installation of two or more liners in this paragraph may be satisfied by the installation of a top liner designed, operated and constructed of materials to prevent the migration of any constituent into such liner during the period such facility remains in operation (including any post-closure monitoring period), and a lower liner designed, operated, and constructed to prevent the migration of any constituent through such liner during such period. For the purpose of the preceding sentence, a lower liner shall be deemed to satisfy such requirement if it is constructed of at least a 3-foot thick layer of recompacted clay or other natural material with a permeability of no more than 1×10^{-7} centimeter per second.

(d) Paragraph (c) of this section will not apply if the owner or operator demonstrates to the Regional Administrator, and the Regional Administrator finds for such surface impoundment, that alternative design and operating practices, together with location characteristics, will prevent the migration of any hazardous constituent into the ground water or surface water at least as effectively as such liners and leachate collection systems.

(e) The double liner requirement set forth in paragraph (c) of this section may be waived by the Regional Administrator for any monofill, if:

(1) The monofill contains only hazardous wastes from foundry furnace emission controls or metal casting molding sand, and such wastes do not contain constituents which would render the wastes hazardous for reasons other than the EP toxicity characteristics in § 261.24 of this chapter; and

(2)(i)(A) The monofill has at least one liner for which there is no evidence that such liner is leaking. For the purposes of this paragraph, the term "liner" means a liner designed, constructed, installed, and operated to prevent hazardous waste from passing into the liner at any time during the active life of the facility, or a liner designed, constructed, installed, and operated to prevent hazardous waste from migrating beyond the liner to adjacent subsurface soil, ground water, or surface water at any time during the active life of the facility. In the case of any surface impoundment which has been exempted from the requirements of paragraph (c) of this section on the basis of a liner designed, constructed, installed, and operated to prevent hazardous waste from passing beyond the liner, at the closure of such impoundment, the owner or operator must remove or decontaminate all waste residues, all contaminated liner material, and contaminated soil to the extent practicable. If all contaminated soil is not removed or decontaminated, the owner or operator of such impoundment will comply with appropriate post-closure requirements, including but not limited to ground-water monitoring and corrective action;

(B) The monofill is located more than one-quarter mile from an underground source of drinking water (as that term is defined in § 144.3 of this chapter); and

(C) The monofill is in compliance with generally applicable groundwater monitoring requirements for facilities with permits under RCRA section 3005(c); or

(ii) The owner or operator demonstrates that the monofill is located, designed and operated so as to assure that there will be no migration of any hazardous constituent into ground water or surface water at any future time.

(f) A surface impoundment must be designed, constructed, maintained, and operated to prevent overtopping resulting from normal or abnormal operations; overfilling; wind and wave action; rainfall; run-on; malfunctions of level controllers, alarms, and other equipment; and human error.

(g) A surface impoundment must have dikes that are designed, constructed, and maintained with sufficient structural integrity to prevent massive failure of the dikes. In ensuring structural integrity, it must not be presumed that the liner system will function without leakage during the active life of the unit.

(h) The Regional Administrator will specify in the permit all design and operating practices that are necessary to ensure that the requirements of this section are satisfied.

(Approved by the Office of Management and Budget under control number 2050-0007)

[47 FR 32357, July 26, 1982, as amended at 50 FR 4514, Jan. 31, 1985; 50 FR 28747, July 15, 1985]

§§ 264.222—264.225 [Reserved]

§ 264.226 Monitoring and inspection.

(a) During construction and installation, liners (except in the case of existing portions of surface impoundments exempt from § 264.221(a)) and cover systems (e.g., membranes, sheets, or coatings) must be inspected for uniformity, damage, and imperfections (e.g., holes, cracks, thin spots, or foreign materials). Immediately after construction or installation:

(1) Synthetic liners and covers must be inspected to ensure tight seams and joints and the absence of tears, punctures, or blisters; and

(2) Soil-based and admixed liners and covers must be inspected for imperfections including lenses, cracks, channels, root holes, or other structural non-uniformities that may cause an increase in the permeability of the liner or cover.

(b) While a surface impoundment is in operation, it must be inspected weekly and after storms to detect evidence of any of the following:

(1) Deterioration, malfunctions, or improper operation of overtopping control systems;

(2) Sudden drops in the level of the impoundment's contents; and

(3) Severe erosion or other signs of deterioration in dikes or other containment devices.

(c) Prior to the issuance of a permit, and after any extended period of time (at least six months) during which the impoundment was not in service, the owner or operator must obtain a certification from a qualified engineer that the impoundment's dike, including that portion of any dike which provides freeboard, has structural integrity. The certification must establish, in particular, that the dike:

(1) Will withstand the stress of the pressure exerted by the types and amounts of wastes to be placed in the impoundment; and

(2) Will not fail due to scouring or piping, without dependence on any liner system included in the surface impoundment construction.

(Approved by the Office of Management and Budget under control number 2050-0007)

[47 FR 32357, July 26, 1982, as amended at 50 FR 4514, Jan. 31, 1985; 50 FR 28748, July 15, 1985]

§ 264.227 Emergency repairs; contingency plans.

(a) A surface impoundment must be removed from service in accordance with paragraph (b) of this section when:

(1) The level of liquids in the impoundment suddenly drops and the drop is not known to be caused by changes in the flows into or out of the impoundment; or

(2) The dike leaks.

(b) When a surface impoundment must be removed from service as required by paragraph (a) of this section, the owner or operator must:

(1) Immediately shut off the flow or stop the addition of wastes into the impoundment;

ent, qualified, registered, professional engineer in accordance with § 270.11(d) that the repaired system is capable of handling hazardous wastes without release for the intended life of the system. This certification must be submitted to the Regional Administrator within seven days after returning the tank system to use.

[NOTE: The Regional Administrator may, on the basis of any information received that there is or has been a release of hazardous waste or hazardous constituents into the environment, issue an order under RCRA sections 3004(u), 3008(h), or 7003(a) requiring corrective action or such other response as deemed necessary to protect human health or the environment.]

[NOTE: See § 264.15(c) for the requirements necessary to remedy a failure. Also, 40 CFR Part 302 may require the owner or operator to notify the National Response Center of certain releases.]

(Information collection requirements contained in paragraphs (d), (e), and (f) were approved by the Office of Management and Budget under control number 2050-0050)

[51 FR 25472, July 14, 1986; 51 FR 29430, Aug. 15, 1986]

§ 264.197 Closure and post-closure care.

(a) At closure of a tank system, the owner or operator must remove or decontaminate all waste residues, contaminated containment system components (liners, etc.), contaminated soils, and structures and equipment contaminated with waste, and manage them as hazardous waste, unless § 261.3(d) of this Chapter applies. The closure plan, closure activities, cost estimates for closure, and financial responsibility for tank systems must meet all of the requirements specified in Subparts G and H of this Part.

(b) If the owner or operator demonstrates that not all contaminated soils can be practicably removed or decontaminated as required in paragraph (a) of this section, then the owner or operator must close the tank system and perform post-closure care in accordance with the closure and post-closure care requirements that apply to landfills (§ 264.310). In addition, for the purposes of closure, post-closure, and financial responsibility, such a tank system is then considered to be a landfill, and the owner or operator must meet all of the requirements for landfills specified in Subparts G and H of this part.

(c) If an owner or operator has a tank system that does not have secondary containment that meets the requirements of § 264.193 (b) through (f) and has not been granted a variance from the secondary containment requirements in accordance with § 264.193(g), then:

(1) The closure plan for the tank system must include both a plan for complying with paragraph (a) of this section and a contingent plan for complying with paragraph (b) of this section.

(2) A contingent post-closure plan for complying with paragraph (b) of this section must be prepared and submitted as part of the permit application.

(3) The cost estimates calculated for closure and post-closure care must reflect the costs of complying with the contingent closure plan and the contingent post-closure plan, if those costs are greater than the costs of complying with the closure plan prepared for the expected closure under paragraph (a) of this section.

(4) Financial assurance must be based on the cost estimates in paragraph (c)(3) of this section.

(5) For the purposes of the contingent closure and post-closure plans, such a tank system is considered to be a landfill, and the contingent plans must meet all of the closure, post-closure, and financial responsibility requirements for landfills under Subparts G and H of this Part.

(Information collection requirements contained in paragraphs (a)-(c) were approved by the Office of Management and Budget under control number 2050-0050)

[51 FR 25472, July 14, 1986; 51 FR 29430, Aug. 15, 1986]

§ 264.198 Special requirements for ignitable or reactive wastes.

(a) Ignitable or reactive waste must not be placed in tank systems, unless:

(1) The waste is treated, rendered, or mixed before or immediately after placement in the tank system so that:

(i) The resulting waste, mixture, or dissolved material no longer meets the definition of ignitable or reactive waste under §§ 261.21 or 261.23 of this Chapter, and

(ii) Section 264.17(b) is complied with; or

(2) The waste is stored or treated in such a way that it is protected from any material or conditions that may cause the waste to ignite or react; or

(3) The tank system is used solely for emergencies.

(b) The owner or operator of a facility where ignitable or reactive waste is stored or treated in a tank must comply with the requirements for the maintenance of protective distances between the waste management area and any public ways, streets, alleys, or an adjoining property line that can be built upon as required in Tables 2-1 through 2-6 of the National Fire Protection Association's "Flammable and Combustible Liquids Code," (1977 or 1981), (incorporated by reference, see § 260.11).

§ 264.199 Special requirements for incompatible wastes.

(a) Incompatible wastes, or incompatible wastes and materials, must not be placed in the same tank system, unless § 264.17(b) is complied with.

(b) Hazardous waste must not be placed in a tank system that has not been decontaminated and that previously held an incompatible waste or material, unless § 264.17(b) is complied with.

Subpart K—Surface Impoundments

SOURCE: 47 FR 32357, July 26, 1982, unless otherwise noted.

§ 264.220 Applicability.

The regulations in this subpart apply to owners and operators of facilities that use surface impoundments to treat, store, or dispose of hazardous waste except as § 264.1 provides otherwise.

§ 264.221 Design and operating requirements.

(a) Any surface impoundment that is not covered by paragraph (c) of this section or § 265.221 of this chapter must have a liner for all portions of the impoundment (except for existing portions of such impoundments). The liner must be designed, constructed, and installed to prevent any migration of wastes out of the impoundment to the adjacent subsurface soil or ground water or surface water at any time during the active life (including the closure period) of the impoundment. The liner may be constructed of materials that may allow wastes to migrate into the liner (but not into the adjacent subsurface soil or ground water or surface water) during the active life of the facility, provided that the impoundment is closed in accordance with § 264.228(a)(1). For impoundments that will be closed in accordance with § 264.228(a)(2), the liner must be constructed of materials that can prevent wastes from migrating into the liner during the active life of the facility. The liner must be:

(1) Constructed of materials that have appropriate chemical properties and sufficient strength and thickness to prevent failure due to pressure gradients (including static head and external hydrogeologic forces), physical contact with the waste or leachate to which they are exposed, climatic conditions, the stress of installation, and the stress of daily operation;

(2) Placed upon a foundation or base capable of providing support to the liner and resistance to pressure gradients above and below the liner to prevent failure of the liner due to settlement, compression, or uplift; and

(3) Installed to cover all surrounding earth likely to be in contact with the waste or leachate.

(b) The owner or operator will be exempted from the requirements of paragraph (a) of this section if the Regional Administrator finds, based on a demonstration by the owner or operator, that alternate design and operating practices, together with location characteristics, will prevent the migration of any hazardous constituents (see § 264.93) into the ground water or surface water at any future time. In deciding whether to grant an exemption, the Regional Administrator will consider:

(1) The nature and quantity of the wastes;

(2) The proposed alternate design and operation;

20-142 O—88——19

ject to regulation under Subpart N of this part (Landfills).

(c) The owner or operator of any waste pile that is inside or under a structure that provides protection from precipitation so that neither run-off nor leachate is generated is not subject to regulation under § 264.251 or under Subpart F of this part, provided that:

(1) Liquids or materials containing free liquids are not placed in the pile;

(2) The pile is protected from surface water run-on by the structure or in some other manner;

(3) The pile is designed and operated to control dispersal of the waste by wind, where necessary, by means other than wetting; and

(4) The pile will not generate leachate through decomposition or other reactions.

§ 264.251 Design and operating requirements.

(a) A waste pile (except for an existing portion of a waste pile) must have:

(1) A liner that is designed, constructed, and installed to prevent any migration of wastes out of the pile into the adjacent subsurface soil or ground water or surface water at any time during the active life (including the closure period) of the waste pile. The liner may be constructed of materials that may allow waste to migrate into the liner itself (but not into the adjacent subsurface soil or ground water or surface water) during the active life of the facility. The liner must be:

(i) Constructed of materials that have appropriate chemical properties and sufficient strength and thickness to prevent failure due to pressure gradients (including static head and external hydrogeologic forces), physical contact with the waste or leachate to which they are exposed, climatic conditions, the stress of installation, and the stress of daily operation;

(ii) Placed upon a foundation or base capable of providing support to the liner and resistance to pressure gradients above and below the liner to prevent failure of the liner due to settlement, compression, or uplift; and

(iii) Installed to cover all surrounding earth likely to be in contact with the waste or leachate; and

(2) A leachate collection and removal system immediately above the liner that is designed, constructed, maintained, and operated to collect and remove leachate from the pile. The Regional Administrator will specify design and operating conditions in the permit to ensure that the leachate depth over the liner does not exceed 30 cm (one foot). The leachate collection and removal system must be:

(i) Constructed of materials that are:

(A) Chemically resistent to the waste managed in the pile and the leachate expected to be generated; and

(B) Of sufficient strength and thickness to prevent collapse under the pressures exerted by overlaying wastes, waste cover materials, and by any equipment used at the pile; and

(ii) Designed and operated to function without clogging through the scheduled closure of the waste pile.

(b) The owner or operator will be exempted from the requirements of paragraph (a) of this section, if the Regional Administrator finds, based on a demonstration by the owner or operator, that alternate design and operating practices, together with location characteristics, will prevent the migration of any hazardous constituents (see § 264.93) into the ground water or surface water at any future time. In deciding whether to grant an exemption, the Regional Administrator will consider:

(1) The nature and quantity of the wastes;

(2) The proposed alternate design and operation;

(3) The hydrogeologic setting of the facility, including attenuative capacity and thickness of the liners and soils present between the pile and ground water or surface water; and

(4) All other factors which would influence the quality and mobility of the leachate produced and the potential for it to migrate to ground water or surface water.

(c) The owner or operator must design, construct, operate, and maintain a run-on control system capable of preventing flow onto the active portion of the pile during peak discharge from at least a 25-year storm.

(d) The owner or operator must design, construct, operate, and maintain a run-off management system to collect and control at least the water volume resulting from a 24-hour, 25-year storm.

(e) Collection and holding facilities (e.g., tanks or basins) associated with run-on and run-off control systems must be emptied or otherwise managed expeditiously after storms to maintain design capacity of the system.

(f) If the pile contains any particulate matter which may be subject to wind dispersal, the owner or operator must cover or otherwise manage the pile to control wind dispersal.

(g) The Regional Administrator will specify in the permit all design and operating practices that are necessary to ensure that the requirements of this section are satisfied.

(Approved by the Office of Management and Budget under control number 2050-0007)

[47 FR 32359, July 26, 1982, as amended at 50 FR 4514, Jan. 31, 1985]

§§ 264.252—264.253 [Reserved]

§ 264.254 Monitoring and inspection.

(a) During construction or installation, liners (except in the case of existing portions of piles exempt from § 264.251(a)) and cover systems (*e.g.*, membranes, sheets, or coatings) must be inspected for uniformity, damage, and imperfections (*e.g.*, holes, cracks, thin spots, or foreign materials). Immediately after construction or installation:

(1) Synthetic liners and covers must be inspected to ensure tight seams and joints and the absence of tears, punctures, or blisters; and

(2) Soil-based and admixed liners and covers must be inspected for imperfections including lenses, cracks, channels, root holes, or other structural non-uniformities that may cause an increase in the permeability of the liner or cover.

(b) While a waste pile is in operation, it must be inspected weekly and after storms to detect evidence of any of the following:

(1) Deterioration, malfunctions, or improper operation of run-on and run-off control systems;

(2) Proper functioning of wind dispersal control systems, where present; and

(3) The presence of leachate in and proper functioning of leachate collection and removal systems, where present.

(Approved by the Office of Management and Budget under control number 2050-0007)

[47 FR 32359, July 26, 1982, as amended at 50 FR 4514, Jan. 31, 1985; 50 FR 28748, July 15, 1985]

§ 264.255 [Reserved]

§ 264.256 Special requirements for ignitable or reactive waste.

Ignitable or reactive waste must not be placed in a waste pile unless:

(a) The waste is treated, rendered, or mixed before or immediately after placement in the pile so that:

(1) The resulting waste, mixture, or dissolution of material no longer meets the definition of ignitable or reactive waste under § 261.21 or § 261.23 of this chapter; and

(2) Section 264.17(b) is complied with; or

(b) The waste is managed in such a way that it is protected from any material or conditions which may cause it to ignite or react.

§ 264.257 Special requirements for incompatible wastes.

(a) Incompatible wastes, or incompatible wastes and materials, (see Appendix V of this part for examples) must not be placed in the same pile, unless § 264.17(b) is complied with.

(b) A pile of hazardous waste that is incompatible with any waste or other material stored nearby in containers, other piles, open tanks, or surface impoundments must be separated from the other materials, or protected from them by means of a dike, berm, wall, or other device.

(c) Hazardous waste must not be piled on the same base where incompatible wastes or materials were previously piled, unless the base has been

(2) Immediately contain any surface leakage which has occurred or is occurring;

(3) Immediately stop the leak;

(4) Take any other necessary steps to stop or prevent catastrophic failure;

(5) If a leak cannot be stopped by any other means, empty the impoundment; and

(6) Notify the Regional Administrator of the problem in writing within seven days after detecting the problem.

(c) As part of the contingency plan required in Subpart D of this part, the owner or operator must specify a procedure for complying with the requirements of paragraph (b) of this section.

(d) No surface impoundment that has been removed from service in accordance with the requirements of this section may be restored to service unless the portion of the impoundment which was failing is repaired and the following steps are taken:

(1) If the impoundment was removed from service as the result of actual or imminent dike failure, the dike's structural integrity must be recertified in accordance with § 264.226(c).

(2) If the impoundment was removed from service as the result of a sudden drop in the liquid level, then:

(i) For any existing portion of the impoundment, a liner must be installed in compliance with § 264.221(a); and

(ii) For any other portion of the impoundment, the repaired liner system must be certified by a qualified engineer as meeting the design specifications approved in the permit.

(e) A surface impoundment that has been removed from service in accordance with the requirements of this section and that is not being repaired must be closed in accordance with the provisions of § 264.228.

[47 FR 32357, July 26, 1982, as amended at 50 FR 28748, July 15, 1985]

§ 264.228 Closure and post-closure care.

(a) At closure, the owner or operator must:

(1) Remove or decontaminate all waste residues, contaminated containment system components (liners, etc.), contaminated subsoils, and structures and equipment contaminated with waste and leachate, and manage them as hazardous waste unless § 261.3(d) of this chapter applies; or

(2)(i) Eliminate free liquids by removing liquid wastes or solidifying the remaining wastes and waste residues;

(ii) Stabilize remaining wastes to a bearing capacity sufficient to support final cover; and

(iii) Cover the surface impoundment with a final cover designed and constructed to:

(A) Provide long-term minimization of the migration of liquids through the closed impoundment;

(B) Function with minimum maintenance;

(C) Promote drainage and minimize erosion or abrasion of the final cover;

(D) Accommodate settling and subsidence so that the cover's integrity is maintained; and

(E) Have a permeability less than or equal to the permeability of any bottom liner system or natural subsoils present.

(b) If some waste residues or contaminated materials are left in place at final closure, the owner or operator must comply with all post-closure requirements contained in §§ 264.117 through 264.120, including maintenance and monitoring throughout the post-closure care period (specified in the permit under § 264.117). The owner or operator must:

(1) Maintain the integrity and effectiveness of the final cover, including making repairs to the cap as necessary to correct the effects of settling, subsidence, erosion, or other events;

(2) Maintain and monitor the ground-water monitoring system and comply with all other applicable requirements of Subpart F of this part; and

(3) Prevent run-on and run-off from eroding or otherwise damaging the final cover.

(c)(1) If an owner or operator plans to close a surface impoundment in accordance with paragraph (a)(1) of this section, and the impoundment does not comply with the liner requirements of § 264.221(a) and is not exempt from them in accordance with § 264.221(b), then:

(i) The closure plan for the impoundment under § 264.112 must include both a plan for complying with paragraph (a)(1) of this section and a contingent plan for complying with paragraph (a)(2) of this section in case not all contaminated subsoils can be practicably removed at closure; and

(ii) The owner or operator must prepare a contingent post-closure plan under § 264.118 for complying with paragraph (b) of this section in case not all contaminated subsoils can be practicably removed at closure.

(2) The cost estimates calculated under §§ 264.142 and 264.144 for closure and post-closure care of an impoundment subject to this paragraph must include the cost of complying with the contingent closure plan and the contingent post-closure plan, but are not required to include the cost of expected closure under paragraph (a)(1) of this section.

[47 FR 32357, July 26, 1982, as amended at 50 FR 28748, July 15, 1985]

§ 264.229 Special requirements for ignitable or reactive waste.

Ignitable or reactive waste must not be placed in a surface impoundment, unless:

(a) The waste is treated, rendered, or mixed before or immediately after placement in the impoundment so that:

(1) The resulting waste, mixture, or dissolution of material no longer meets the definition of ignitable or reactive waste under § 261.21 or § 261.23 of this chapter; and

(2) Section 264.17(b) is complied with; or

(b) The waste is managed in such a way that it is protected from any material or conditions which may cause it to ignite or react; or

(c) The surface impoundment is used solely for emergencies.

§ 264.230 Special requirements for incompatible wastes.

Incompatible wastes, or incompatible wastes and materials, (see Appendix V of this part for examples) must not be placed in the same surface impoundment, unless § 264.17(b) is complied with.

§ 264.231 Special requirements for hazardous wastes FO20, FO21, FO22, FO23, FO26, and FO27.

(a) Hazardous Wastes FO20, FO21, FO22, FO23, FO26, and FO27 must not be placed in a surface impoundment unless the owner or operator operates the surface impoundment in accordance with a management plan for these wastes that is approved by the Regional Administrator pursuant to the standards set out in this paragraph, and in accord with all other applicable requirements of this part. The factors to be considered are:

(1) The volume, physical, and chemical characteristics of the wastes, including their potential to migrate through soil or to volatilize or escape into the atmosphere;

(2) The attenuative properties of underlying and surrounding soils or other materials;

(3) The mobilizing properties of other materials co-disposed with these wastes; and

(4) The effectiveness of additional treatment, design, or monitoring techniques.

(b) The Regional Administrator may determine that additional design, operating, and monitoring requirements are necessary for surface impoundments managing hazardous wastes FO20, FO21, FO22, FO23, FO26, and FO27 in order to reduce the possibility of migration of these wastes to ground water, surface water, or air so as to protect human health and the environment.

[50 FR 2004, Jan. 14, 1985]

Subpart L—Waste Piles

SOURCE: 47 FR 32359, July 26, 1982, unless otherwise noted.

§ 264.250 Applicability.

(a) The regulations in this subpart apply to owners and operators of facilities that store or treat hazardous waste in piles, except as § 264.1 provides otherwise.

(b) The regulations in this subpart do not apply to owners or operators of waste piles that are closed with wastes left in place. Such waste piles are sub-

(v) In the case of field tests, the potential for migration of hazardous constituents to ground water or surface water.

[47 FR 32361, July 26, 1982, as amended at 48 FR 14294, Apr. 1, 1983]

§ 264.273 Design and operating requirements.

The Regional Administrator will specify in the facility permit how the owner or operator will design, construct, operate, and maintain the land treatment unit in compliance with this section.

(a) The owner or operator must design, construct, operate, and maintain the unit to maximize the degradation, transformation, and immobilization of hazardous constituents in the treatment zone. The owner or operator must design, construct, operate, and maintain the unit in accord with all design and operating conditions that were used in the treatment demonstration under § 264.272. At a minimum, the Regional Administrator will specify the following in the facility permit:

(1) The rate and method of waste application to the treatment zone;

(2) Measures to control soil pH;

(3) Measures to enhance microbial or chemical reactions (*e.g.*, fertilization, tilling); and

(4) Measures to control the moisture content of the treatment zone.

(b) The owner or operator must design, construct, operate, and maintain the treatment zone to minimize run-off of hazardous constituents during the active life of the land treatment unit.

(c) The owner or operator must design, construct, operate, and maintain a run-on control system capable of preventing flow onto the treatment zone during peak discharge from at least a 25-year storm.

(d) The owner or operator must design, construct, operate, and maintain a run-off management system to collect and control at least the water volume resulting from a 24-hour, 25-year storm.

(e) Collection and holding facilities (*e.g.*, tanks or basins) associated with run-on and run-off control systems must be emptied or otherwise managed expeditiously after storms to maintain the design capacity of the system.

(f) If the treatment zone contains particulate matter which may be subject to wind dispersal, the owner or operator must manage the unit to control wind dispersal.

(g) The owner or operator must inspect the unit weekly and after storms to detect evidence of:

(1) Deterioration, malfunctions, or improper operation of run-on and run-off control systems; and

(2) Improper functioning of wind dispersal control measures.

(Approved by the Office of Management and Budget under control number 2050-0007)

[47 FR 32361, July 26, 1982, as amended at 50 FR 4514, Jan. 31, 1985]

§§ 264.274—264.275 [Reserved]

§ 264.276 Food-chain crops.

The Regional Administrator may allow the growth of food-chain crops in or on the treatment zone only if the owner or operator satisfies the conditions of this section. The Regional Administrator will specify in the facility permit the specific food-chain crops which may be grown.

(a)(1) The owner or operator must demonstrate that there is no substantial risk to human health caused by the growth of such crops in or on the treatment zone by demonstrating, prior to the planting of such crops, that hazardous constituents other than cadmium:

(i) Will not be transferred to the food or feed portions of the crop by plant uptake or direct contact, and will not otherwise be ingested by food-chain animals (*e.g.*, by grazing); or

(ii) Will not occur in greater concentrations in or on the food or feed portions of crops grown on the treatment zone than in or on identical portions of the same crops grown on untreated soils under similar conditions in the same region.

(2) The owner or operator must make the demonstration required under this paragraph prior to the planting of crops at the facility for all constituents identified in Appendix VIII of Part 261 of this chapter that are reasonably expected to be in, or derived from, waste placed in or on the treatment zone.

(3) In making a demonstration under this paragraph, the owner or operator may use field tests, greenhouse studies, available data, or, in the case of existing units, operating data, and must:

(i) Base the demonstration on conditions similar to those present in the treatment zone, including soil characteristics (*e.g.*, pH, cation exchange capacity), specific wastes, application rates, application methods, and crops to be grown; and

(ii) Describe the procedures used in conducting any tests, including the sample selection criteria, sample size, analytical methods, and statistical procedures.

(4) If the owner or operator intends to conduct field tests or greenhouse studies in order to make the demonstration required under this paragraph, he must obtain a permit for conducting such activities.

(b) The owner or operator must comply with the following conditions if cadmium is contained in wastes applied to the treatment zone:

(1)(i) The pH of the waste and soil mixture must be 6.5 or greater at the time of each waste application, except for waste containing cadmium at concentrations of 2 mg/kg (dry weight) or less;

(ii) The annual application of cadmium from waste must not exceed 0.5 kilograms per hectare (kg/ha) on land used for production of tobacco, leafy vegetables, or root crops grown for human consumption. For other food-chain crops, the annual cadmium application rate must not exceed:

Time period	Annual Cd application rate (kilograms per hectare)
Present to June 30, 1984	2.0
July 1, 1984 to December 31, 1986	1.25
Beginning January 1, 1987	0.5

(iii) The cumulative application of cadmium from waste must not exceed 5 kg/ha if the waste and soil mixture has a pH of less than 6.5; and

(iv) If the waste and soil mixture has a pH of 6.5 or greater or is maintained at a pH of 6.5 or greater during crop growth, the cumulative application of cadmium from waste must not exceed: 5 kg/ha if soil cation exchange capacity (CEC) is less than 5 meq/100g; 10 kg/ha if soil CEC is 5-15 meq/100g; and 20 kg/ha if soil CEC is greater than 15 meq/100g; or

(2)(i) Animal feed must be the only food-chain crop produced;

(ii) The pH of the waste and soil mixture must be 6.5 or greater at the time of waste application or at the time the crop is planted, whichever occurs later, and this pH level must be maintained whenever food-chain crops are grown;

(iii) There must be an operating plan which demonstrates how the animal feed will be distributed to preclude ingestion by humans. The operating plan must describe the measures to be taken to safeguard against possible health hazards from cadmium entering the food chain, which may result from alternative land uses; and

(iv) Future property owners must be notified by a stipulation in the land record or property deed which states that the property has received waste at high cadmium application rates and that food-chain crops must not be grown except in compliance with paragraph (b)(2) of this section.

§ 264.277 [Reserved]

§ 264.278 Unsaturated zone monitoring.

An owner or operator subject to this subpart must establish an unsaturated zone monitoring program to discharge the following responsibilities:

(a) The owner or operator must monitor the soil and soil-pore liquid to determine whether hazardous constituents migrate out of the treatment zone.

(1) The Regional Administrator will specify the hazardous constituents to be monitored in the facility permit. The hazardous constituents to be monitored are those specified under § 264.271(b).

(2) The Regional Administrator may require monitoring for principal haz-

decontaminated sufficiently to ensure compliance with § 264.17(b).

§ 264.258 Closure and post-closure care.

(a) At closure, the owner or operator must remove or decontaminate all waste residues, contaminated containment system components (liners, etc.), contaminated subsoils, and structures and equipment contaminated with waste and leachate, and manage them as hazardous waste unless § 261.3(d) of this chapter applies.

(b) If, after removing or decontaminating all residues and making all reasonable efforts to effect removal or decontamination of contaminated components, subsoils, structures, and equipment as required in paragraph (a) of this section, the owner or operator finds that not all contaminated subsoils can be practicably removed or decontaminated, he must close the facility and perform post-closure care in accordance with the closure and post-closure care requirements that apply to landfills (§ 264.310).

(c)(1) The owner or operator of a waste pile that does not comply with the liner requirements of § 264.251(a)(1) and is not exempt from them in accordance with § 264.250(c) or § 264.251(b), must:

(i) Include in the closure plan for the pile under § 264.112 both a plan for complying with paragraph (a) of this section and a contingent plan for complying with paragraph (b) of this section in case not all contaminated subsoils can be practicably removed at closure; and

(ii) Prepare a contingent post-closure plan under § 264.118 for complying with paragraph (b) of this section in case not all contaminated subsoils can be practicably removed at closure.

(2) The cost estimates calculated under §§ 264.142 and 264.144 for closure and post-closure care of a pile subject to this paragraph must include the cost of complying with the contingent closure plan and the contingent post-closure plan, but are not required to include the cost of expected closure under paragraph (a) of this section.

§ 264.259 Special requirements for hazardous wastes FO20, FO21, FO22, FO23, FO26, and FO27.

(a) Hazardous Wastes FO20, FO21, FO22, FO23, FO26, and FO27 must not be placed in waste piles that are not enclosed (as defined in § 264.250(c)) unless the owner or operator operates the waste pile in accordance with a management plan for these wastes that is approved by the Regional Administrator pursuant to the standards set out in this paragraph, and in accord with all other applicable requirements of this part. The factors to be considered are:

(1) The volume, physical, and chemical characteristics of the wastes, including their potential to migrate through soil or to volatilize or escape into the atmosphere;

(2) The attenuative properties of underlying and surrounding soils or other materials;

(3) The mobilizing properties of other materials co-disposed with these wastes; and

(4) The effectiveness of additional treatment, design, or monitoring techniques.

(b) The Regional Administrator may determine that additional design, operating, and monitoring requirements are necessary for piles managing hazardous wastes FO20, FO21, FO22, FO23, FO26, and, FO27 in order to reduce the possibility of migration of these wastes to ground water, surface water, or air so as to protect human health and the environment.

[50 FR 2004, Jan. 14, 1985]

Subpart M—Land Treatment

SOURCE: 47 FR 32361, July 26, 1982, unless otherwise noted.

§ 264.270 Applicability.

The regulations in this subpart apply to owners and operators of facilities that treat or dispose of hazardous waste in land treatment units, except as § 264.1 provides otherwise.

§ 264.271 Treatment program.

(a) An owner or operator subject to this subpart must establish a land treatment program that is designed to

ensure that hazardous constituents placed in or on the treatment zone are degraded, transformed, or immobilized within the treatment zone. The Regional Administrator will specify in the facility permit the elements of the treatment program, including:

(1) The wastes that are capable of being treated at the unit based on a demonstration under § 264.272;

(2) Design measures and operating practices necessary to maximize the success of degradation, transformation, and immobilization processes in the treatment zone in accordance with § 264.273(a); and

(3) Unsaturated zone monitoring provisions meeting the requirements of § 264.278.

(b) The Regional Administrator will specify in the facility permit the hazardous constituents that must be degraded, transformed, or immobilized under this subpart. Hazardous constituents are constituents identified in Appendix VIII of Part 261 of this chapter that are reasonably expected to be in, or derived from, waste placed in or on the treatment zone.

(c) The Regional Administrator will specify the vertical and horizontal dimensions of the treatment zone in the facility permit. The treatment zone is the portion of the unsaturated zone below and including the land surface in which the owner or operator intends to maintain the conditions necessary for effective degradation, transformation, or immobilization of hazardous constituents. The maximum depth of the treatment zone must be:

(1) No more than 1.5 meters (5 feet) from the initial soil surface; and

(2) More than 1 meter (3 feet) above the seasonal high water table.

(Approved by the Office of Management and Budget under control number 2050-0007)

[47 FR 32361, July 26, 1982, as amended at 50 FR 4514, Jan. 31, 1985]

§ 264.272 Treatment demonstration.

(a) For each waste that will be applied to the treatment zone, the owner or operator must demonstrate, prior to application of the waste, that hazardous constituents in the waste can be completely degraded, transformed, or immobilized in the treatment zone.

(b) In making this demonstration, the owner or operator may use field tests, laboratory analyses, available data, or, in the case of existing units, operating data. If the owner or operator intends to conduct field tests or laboratory analyses in order to make the demonstration required under paragraph (a) of this section, he must obtain a treatment or disposal permit under § 270.63. The Regional Administrator will specify in this permit the testing, analytical, design, and operating requirements (including the duration of the tests and analyses, and, in the case of field tests, the horizontal and vertical dimensions of the treatment zone, monitoring procedures, closure and clean-up activities) necessary to meet the requirements in paragraph (c) of this section.

(c) Any field test or laboratory analysis conducted in order to make a demonstration under paragraph (a) of this section must:

(1) Accurately simulate the characteristics and operating conditions for the proposed land treatment unit including:

(i) The characteristics of the waste (including the presence of Appendix VIII of Part 261 of this chapter constituents);

(ii) The climate in the area;

(iii) The topography of the surrounding area;

(iv) The characteristics of the soil in the treatment zone (including depth); and

(v) The operating practices to be used at the unit.

(2) Be likely to show that hazardous constituents in the waste to be tested will be completely degraded, transformed, or immobilized in the treatment zone of the proposed land treatment unit; and

(3) Be conducted in a manner that protects human health and the environment considering:

(i) The characteristics of the waste to be tested;

(ii) The operating and monitoring measures taken during the course of the test;

(iii) The duration of the test;

(iv) The volume of waste used in the test;

extent such measures are inconsistent with paragraph (a)(8) of this section.

(2) Continue all operations in the treatment zone to minimize run-off of hazardous constituents as required under § 264.273(b);

(3) Maintain the run-on control system required under § 264.273(c);

(4) Maintain the run-off management system required under § 264.273(d);

(5) Control wind dispersal of hazardous waste if required under § 264.273(f);

(6) Continue to comply with any prohibitions or conditions concerning growth of food-chain crops under § 264.276;

(7) Continue unsaturated zone monitoring in compliance with § 264.278, except that soil-pore liquid monitoring may be terminated 90 days after the last application of waste to the treatment zone; and

(8) Establish a vegetative cover on the portion of the facility being closed at such time that the cover will not substantially impede degradation, transformation, or immobilization of hazardous constituents in the treatment zone. The vegetative cover must be capable of maintaining growth without extensive maintenance.

(b) For the purpose of complying with § 264.115, when closure is completed the owner or operator may submit to the Regional Administrator certification by an independent qualified soil scientist, in lieu of an independent registered professional engineer, that the facility has been closed in accordance with the specifications in the approved closure plan.

(c) During the post-closure care period the owner or operator must:

(1) Continue all operations (including pH control) necessary to enhance degradation and transformation and sustain immobilization of hazardous constituents in the treatment zone to the extent that such measures are consistent with other post-closure care activities;

(2) Maintain a vegetative cover over closed portions of the facility;

(3) Maintain the run-on control system required under § 264.273(c);

(4) Maintain the run-off management system required under § 264.273(d);

(5) Control wind dispersal of hazardous waste if required under § 264.273(f);

(6) Continue to comply with any prohibitions or conditions concerning growth of food-chain crops under § 264.276; and

(7) Continue unsaturated zone monitoring in compliance with § 264.278, expect that soil-pore liquid monitoring may be terminated 90 days after the last application of waste to the treatment zone.

(d) The owner or operator is not subject to regulation under paragraphs (a)(8) and (c) of this section if the Regional Administrator finds that the level of hazardous constituents in the treatment zone soil does not exceed the background value of those constituents by an amount that is statistically significant when using the test specified in paragraph (d)(3) of this section. The owner or operator may submit such a demonstration to the Regional Administrator at any time during the closure of post-closure care periods. For the purposes of this paragraph:

(1) The owner or operator must establish background soil values and determine whether there is a statistically significant increase over those values for all hazardous constituents specified in the facility permit under § 264.271 (b).

(i) Background soil values may be based on a one-time sampling of a background plot having characteristics similar to those of the treatment zone.

(ii) The owner or operator must express background values and values for hazardous constituents in the treatment zone in a form necessary for the determination of statistically significant increases under paragraph (d)(3) of this section.

(2) In taking samples used in the determination of background and treatment zone values, the owner or operator must take samples at a sufficient number of sampling points and at appropriate locations and depths to yield samples that represent the chemical make-up of soil that has not been affected by leakage from the treatment zone and the soil within the treatment zone, respectively.

(3) In determining whether a statistically significant increase has occurred, the owner or operator must compare the value of each constituent in the treatment zone to the background value for that constituent using a statistical procedure that provides reasonable confidence that constituent presence in the treatment zone will be identified. The owner or operator must use a statistical procedure that:

(i) Is appropriate for the distribution of the data used to establish background values; and

(ii) Provides a reasonable balance between the probability of falsely identifying hazardous constituent presence in the treatment zone and the probability of failing to identify real presence in the treatment zone.

(e) The owner or operator is not subject to regulation under Subpart F of this chapter if the Regional Administrator finds that the owner or operator satisfies paragraph (d) of this section and if unsaturated zone monitoring under § 264.278 indicates that hazardous constituents have not migrated beyond the treatment zone during the active life of the land treatment unit.

§ 264.281 Special requirements for ignitable or reactive waste.

The owner or operator must not apply ignitable or reactive waste to the treatment zone unless:

(a) The waste is immediately incorporated into the soil so that:

(1) The resulting waste, mixture, or dissolution of material no longer meets the definition of ignitable or reactive waste under § 261.21 or § 261.23 of this chapter; and

(2) Section 264.17(b) is complied with; or

(b) The waste is managed in such a way that it is protected from any material or conditions which may cause it to ignite or react.

§ 264.282 Special requirements for incompatible wastes.

The owner or operator must not place incompatible wastes, or incompatible wastes and materials (see Appendix V of this part for examples), in or on the same treatment zone, unless § 264.17(b) is complied with.

§ 264.283 Special requirements for hazardous wastes FO20, FO21, FO22, FO23, FO26, and FO27.

(a) Hazardous Wastes FO20, FO21, FO22, FO23, FO26 and, FO27 must not be placed in a land treatment unit unless the owner or operator operates the facility in accordance with a management plan for these wastes that is approved by the Regional Administrator pursuant to the standards set out in this paragraph, and in accord with all other applicable requirements of this part. The factors to be considered are:

(1) The volume, physical, and chemical characteristics of the wastes, including their potential to migrate through soil or to volatilize or escape into the atmosphere;

(2) The attenuative properties of underlying and surrounding soils or other materials;

(3) The mobilizing properties of other materials co-disposed with these wastes; and

(4) The effectiveness of additional treatment, design, or monitoring techniques.

(b) The Regional Administrator may determine that additional design, operating, and monitoring requirements are necessary for land treatment facilities managing hazardous wastes FO20, FO21, FO22, FO23, FO26, and FO27 in order to reduce the possibility of migration of these wastes to ground water, surface water, or air so as to protect human health and the environment.

[50 FR 2004, Jan. 14, 1985]

Subpart N—Landfills

SOURCE: 47 FR 32365, July 26, 1982, unless otherwise noted.

§ 264.300 Applicability.

The regulations in this subpart apply to owners and operators of facilities that dispose of hazardous waste in landfills, except as § 264.1 provides otherwise.

ardous constituents (PHCs) in lieu of the constituents specified under § 264.271(b). PHCs are hazardous constituents contained in the wastes to be applied at the unit that are the most difficult to treat, considering the combined effects of degradation, transformation, and immobilization. The Regional Administrator will establish PHCs if he finds, based on waste analyses, treatment demonstrations, or other data, that effective degradation, transformation, or immobilization of the PHCs will assure treatment at at least equivalent levels for the other hazardous constituents in the wastes.

(b) The owner or operator must install an unsaturated zone monitoring system that includes soil monitoring using soil cores and soil-pore liquid monitoring using devices such as lysimeters. The unsaturated zone monitoring system must consist of a sufficient number of sampling points at appropriate locations and depths to yield samples that:

(1) Represent the quality of background soil-pore liquid quality and the chemical make-up of soil that has not been affected by leakage from the treatment zone; and

(2) Indicate the quality of soil-pore liquid and the chemical make-up of the soil below the treatment zone.

(c) The owner or operator must establish a background value for each hazardous constituent to be monitored under paragraph (a) of this section. The permit will specify the background values for each constituent or specify the procedures to be used to calculate the background values.

(1) Background soil values may be based on a one-time sampling at a background plot having characteristics similar to those of the treatment zone.

(2) Background soil-pore liquid values must be based on at least quarterly sampling for one year at a background plot having characteristics similar to those of the treatment zone.

(3) The owner or operator must express all background values in a form necessary for the determination of statistically significant increases under paragraph (f) of this section.

(4) In taking samples used in the determination of all background values, the owner or operator must use an unsaturated zone monitoring system that complies with paragraph (b)(1) of this section.

(d) The owner or operator must conduct soil monitoring and soil-pore liquid monitoring immediately below the treatment zone. The Regional Administrator will specify the frequency and timing of soil and soil-pore liquid monitoring in the facility permit after considering the frequency, timing, and rate of waste application, and the soil permeability. The owner or operator must express the results of soil and soil-pore liquid monitoring in a form necessary for the determination of statistically significant increases under paragraph (f) of this section.

(e) The owner or operator must use consistent sampling and analysis procedures that are designed to ensure sampling results that provide a reliable indication of soil-pore liquid quality and the chemical make-up of the soil below the treatment zone. At a minimum, the owner or operator must implement procedures and techniques for:

(1) Sample collection;

(2) Sample preservation and shipment;

(3) Analytical procedures; and

(4) Chain of custody control.

(f) The owner or operator must determine whether there is a statistically significant change over background values for any hazardous constituent to be monitored under paragraph (a) of this section below the treatment zone each time he conducts soil monitoring and soil-pore liquid monitoring under paragraph (d) of this section.

(1) In determining whether a statistically significant increase has occurred, the owner or operator must compare the value of each constituent, as determined under paragraph (d) of this section, to the background value for that constituent according to the statistical procedure specified in the facility permit under this paragraph.

(2) The owner or operator must determine whether there has been a statistically significant increase below the treatment zone within a reasonable time period after completion of sampling. The Regional Administrator will specify that time period in the facility permit after considering the complexity of the statistical test and the availability of laboratory facilities to perform the analysis of soil and soil-pore liquid samples.

(3) The owner or operator must determine whether there is a statistically significant increase below the treatment zone using a statistical procedure that provides reasonable confidence that migration from the treatment zone will be identified. The Regional Administrator will specify a statistical procedure in the facility permit that he finds:

(i) Is appropriate for the distribution of the data used to establish background values; and

(ii) Provides a reasonable balance between the probability of falsely identifying migration from the treatment zone and the probability of failing to identify real migration from the treatment zone.

(g) If the owner or operator determines, pursuant to paragraph (f) of this section, that there is a statistically significant increase of hazardous constituents below the treatment zone, he must:

(1) Notify the Regional Administrator of this finding in writing within seven days. The notification must indicate what constituents have shown statistically significant increases.

(2) Within 90 days, submit to the Regional Administrator an application for a permit modification to modify the operating practices at the facility in order to maximize the success of degradation, transformation, or immobilization processes in the treatment zone.

(h) If the owner or operator determines, pursuant to paragraph (f) of this section, that there is a statistically significant increase of hazardous constituents below the treatment zone, he may demonstrate that a source other than regulated units caused the increase or that the increase resulted from an error in sampling, analysis, or evaluation. While the owner or operator may make a demonstration under this paragraph in addition to, or in lieu of, submitting a permit modification application under paragraph (g)(2) of this section, he is not relieved of the requirement to submit a permit modification application within the time specified in paragraph (g)(2) of this section unless the demonstration made under this paragraph successfully shows that a source other than regulated units caused the increase or that the increase resulted from an error in sampling, analysis, or evaluation. In making a demonstration under this paragraph, the owner or operator must:

(1) Notify the Regional Administrator in writing within seven days of determining a statistically significant increase below the treatment zone that he intends to make a determination under this paragraph;

(2) Within 90 days, submit a report to the Regional Administrator demonstrating that a source other than the regulated units caused the increase or that the increase resulted from error in sampling, analysis, or evaluation;

(3) Within 90 days, submit to the Regional Administrator an application for a permit modification to make any appropriate changes to the unsaturated zone monitoring program at the facility; and

(4) Continue to monitor in accordance with the unsaturated zone monitoring program established under this section.

(Approved by the Office of Management and Budget under control number 2050-0038)

[47 FR 32361, July 26, 1982, as amended at 50 FR 4514, Jan. 31, 1985]

§ 264.279 Recordkeeping.

The owner or operator must include hazardous waste application dates and rates in the operating record required under § 264.73.

(Approved by the Office of Management and Budget under control number 2050-0007)

[47 FR 32361, July 26, 1982, as amended at 50 FR 4514, Jan. 31, 1985]

§ 264.280 Closure and post-closure care.

(a) During the closure period the owner or operator must:

(1) Continue all operations (including pH control) necessary to maximize degradation, transformation, or immobilization of hazardous constituents within the treatment zone as required under § 264.273(a), except to the

storms to detect evidence of any of the following:

(1) Deterioration, malfunctions, or improper operation of run-on and run-off control systems;

(2) Proper functioning of wind dispersal control systems, where present; and

(3) The presence of leachate in and proper functioning of leachate collection and removal systems, where present.

[47 FR 32365, July 26, 1982, as amended at 50 FR 28748, July 15, 1985]

§§ 264.304—264.308 [Reserved]

§ 264.309 Surveying and recordkeeping.

The owner or operator of a landfill must maintain the following items in the operating record required under § 264.73:

(a) On a map, the exact location and dimensions, including depth, of each cell with respect to permanently surveyed benchmarks; and

(b) The contents of each cell and the approximate location of each hazardous waste type within each cell.

(Approved by the Office of Management and Budget under control number 2050-0007)

[47 FR 32365, July 26, 1982, as amended at 50 FR 4514, Jan. 31, 1985]

§ 264.310 Closure and post-closure care.

(a) At final closure of the landfill or upon closure of any cell, the owner or operator must cover the landfill or cell with a final cover designed and constructed to:

(1) Provide long-term minimization of migration of liquids through the closed landfill;

(2) Function with minimum maintenance;

(3) Promote drainage and minimize erosion or abrasion of the cover;

(4) Accommodate settling and subsidence so that the cover's integrity is maintained; and

(5) Have a permeability less than or equal to the permeability of any bottom liner system or natural subsoils present.

(b) After final closure, the owner or operator must comply with all post-closure requirements contained in §§ 264.117 through 264.120, including maintenance and monitoring throughout the post-closure care period (specified in the permit under § 264.117). The owner or operator must:

(1) Maintain the integrity and effectiveness of the final cover, including making repairs to the cap as necessary to correct the effects of settling, subsidence, erosion, or other events;

(2) Continue to operate the leachate collection and removal system until leachate is no longer detected;

(3) Maintain and monitor the ground-water monitoring system and comply with all other applicable requirements of Subpart F of this part;

(4) Prevent run-on and run-off from eroding or otherwise damaging the final cover; and

(5) Protect and maintain surveyed benchmarks used in complying with § 264.309.

[47 FR 32365, July 26, 1982, as amended at 50 FR 28748, July 15, 1985]

§ 264.311 [Reserved]

§ 264.312 Special requirements for ignitable or reactive waste.

(a) Except as provided in paragraph (b) of this section, and in § 264.316, ignitable or reactive waste must not be placed in a landfill, unless the waste in treated, rendered, or mixed before or immediately after placement in a landfill so that:

(1) The resulting waste, mixture, or dissolution of material no longer meets the definition of ignitable or reactive waste under § 261.21 or § 261.23 of this chapter; and

(2) Section 264.17(b) is complied with.

(b) Ignitable wastes in containers may be landfilled without meeting the requirements of paragraph (a) of this section, provided that the wastes are disposed of in such a way that they are protected from any material or conditions which may cause them to ignite. At a minimum, ignitable wastes must be disposed of in non-leaking containers which are carefully handled and placed so as to avoid heat, sparks, rupture, or any other condition that might cause ignition of the wastes; must be covered daily with soil or other non-combustible material to minimize the potential for ignition of the wastes; and must not be disposed of in cells that contain or will contain other wastes which may generate heat sufficient to cause ignition of the waste.

§ 264.313 Special requirements for incompatible wastes.

Incompatible wastes, or incompatible wastes and materials, (see Appendix V of this part for examples) must not be placed in the same landfill cell, unless § 264.17(b) is complied with.

§ 264.314 Special requirements for bulk and containerized liquids.

(a) Bulk or non-containerized liquid waste or waste containing free liquids may be placed in a landfill prior to May 8, 1985 only if:

(1) The landfill has a liner and leachate collection and removal system that meet the requirements of § 264.301(a); or

(2) Before disposal, the liquid waste or waste containing free liquids is treated or stabilized, chemically or physically (e.g., by mixing with an absorbent solid), so that free liquids are no longer present.

(b) Effective May 8, 1985, the placement of bulk or non-containerized liquid hazardous waste or hazardous waste containing free liquids (whether or not absorbents have been added) in any landfill is prohibited.

(c) To demonstrate the absence or presence of free liquids in either a containerized or a bulk waste, the following test must be used: Method 9095 (Paint Filter Liquids Test) as described in "Test Methods for Evaluating Solid Wastes, Physical/Chemical Methods." [EPA Publication No. SW-846].

(d) Containers holding free liquids must not be placed in a landfill unless:

(1) All free-standing liquid: (i) has been removed by decanting, or other methods; (ii) has been mixed with absorbent or solidified so that free-standing liquid is no longer observed; or (iii) has been otherwise eliminated; or

(2) The container is very small, such as an ampule; or

(3) The container is designed to hold free liquids for use other than storage, such as a battery or capacitor; or

(4) The container is a lab pack as defined in § 264.316 and is disposed of in accordance with § 264.316.

(e) Effective November 8, 1985, the placement of any liquid which is not a hazardous waste in a landfill is prohibited unless the owner or operator of such landfill demonstrates to the Regional Administrator, or the Regional Administrator determines, that:

(1) The only reasonably available alternative to the placement in such landfill is placement in a landfill or unlined surface impoundment, whether or not permitted or operating under interim status, which contains, or may reasonably be anticipated to contain, hazardous waste; and

(2) Placement in such owner or operator's landfill will not present a risk of contamination of any underground source of drinking water (as that term is defined in § 144.3 of this chapter.)

(Approved by the Office of Management and Budget under control number 2050-0037)

[47 FR 32365, July 26, 1982, as amended at 50 FR 18374, Apr. 30, 1985; 50 FR 28748, July 15, 1985]

§ 264.315 Special requirements for containers.

Unless they are very small, such as an ampule, containers must be either:

(a) At least 90 percent full when placed in the landfill; or

(b) Crushed, shredded, or similarly reduced in volume to the maximum practical extent before burial in the landfill.

§ 264.316 Disposal of small containers of hazardous waste in overpacked drums (lab packs).

Small containers of hazardous waste in overpacked drums (lab packs) may be placed in a landfill if the following requirements are met:

(a) Hazardous waste must be packaged in non-leaking inside containers. The inside containers must be of a design and constructed of a material that will not react dangerously with, be decomposed by, or be ignited by the contained waste. Inside containers must be tightly and securely sealed. The inside containers must be of the size and type specified in the Depart-

§ 264.301 Design and operating requirements.

(a) Any landfill that is not covered by paragraph (c) of this section or § 265.301(a) of this chapter must have a liner system for all portions of the landfill (except for existing portions of such landfill). The liner system must have:

(1) A liner that is designed, constructed, and installed to prevent any migration of wastes out of the landfill to the adjacent subsurface soil or ground water or surface water at anytime during the active life (including the closure period) of the landfill. The liner must be constructed of materials that prevent wastes from passing into the liner during the active life of the facility. The liner must be:

(i) Constructed of materials that have appropriate chemical properties and sufficient strength and thickness to prevent failure due to pressure gradients (including static head and external hydrogeologic forces), physical contact with the waste or leachate to which they are exposed, climatic conditions, the stress of installation, and the stress of daily operation;

(ii) Placed upon a foundation or base capable of providing support to the liner and resistance to pressure gradients above and below the liner to prevent failure of the liner due to settlement, compression, or uplift; and

(iii) Installed to cover all surrounding earth likely to be in contact with the waste or leachate; and

(2) A leachate collection and removal system immediately above the liner that is designed, constructed, maintained, and operated to collect and remove leachate from the landfill. The Regional Administrator will specify design and operating conditions in the permit to ensure that the leachate depth over the liner does not exceed 30 cm (one foot). The leachate collection and removal system must be:

(i) Constructed of materials that are:

(A) Chemically resistant to the waste managed in the landfill and the leachate expected to be generated; and

(B) Of sufficient strength and thickness to prevent collapse under the pressures exerted by overlying wastes, waste cover materials, and by any equipment used at the landfill; and

(ii) Designed and operated to function without clogging through the scheduled closure of the landfill.

(b) The owner or operator will be exempted from the requirements of paragraph (a) of this section if the Regional Administrator finds, based on a demonstration by the owner or operator, that alternative design and operating practices, together with location characteristics, will prevent the migration of any hazardous constituents (see § 264.93) into the ground water or surface water at any future time. In deciding whether to grant an exemption, the Regional Administrator will consider:

(1) The nature and quantity of the wastes;

(2) The proposed alternate design and operation;

(3) The hydrogeologic setting of the facility, including the attenuative capacity and thickness of the liners and soils present between the landfill and ground water or surface water; and

(4) All other factors which would influence the quality and mobility of the leachate produced and the potential for it to migrate to ground water or surface water.

(c) The owner or operator of each new landfill, each new landfill unit at an existing facility, each replacement of an existing landfill unit, and each lateral expansion of an existing landfill unit, must install two or more liners and a leachate collection system above and between the liners. The liners and leachate collection systems must protect human health and the environment. The requirement for the installation of two or more liners in this paragraph may be satisfied by the installation of a top liner designed, operated and constructed of materials to prevent the migration of any constituent into such liner during the period such facility remains in operation (including any post-closure monitoring period), and a lower liner designed, operated, and constructed to prevent the migration of any constituent through such liner during such period. For the purpose of the preceding sentence, a lower liner shall be deemed to satisfy such requirement if it is constructed of at least a 3-foot thick layer of recompacted clay or other natural material with a permeability of no more than 1×10^{-7} centimeter per second.

(d) Paragraph (c) of this section will not apply if the owner or operator demonstrates to the Regional Administrator, and the Regional Administrator finds for such landfill, that alternative design and operating practices, together with location characteristics, will prevent the migration of any hazardous constituent into the ground water or surface water at least as effectively as such liners and leachate collection systems.

(e) The double liner requirement set forth in paragraph (c) of this section may be waived by the Regional Administrator for any monofill, if:

(1) The monofill contains only hazardous wastes from foundry furnace emission controls or metal casting molding sand, and such wastes do not contain constituents which would render the wastes hazardous for reasons other than the EP toxicity characteristics in § 261.24 of this chapter; and

(2)(i)(A) The monofill has at least one liner for which there is no evidence that such liner is leaking;

(B) The monofill is located more than one-quarter mile from an underground source of drinking water (as that term is defined in § 144.3 of this chapter); and

(C) The monofill is in compliance with generally applicable groundwater monitoring requirements for facilities with permits under RCRA 3005(c); or

(ii) The owner or operator demonstrates that the monofill is located, designed and operated so as to assure that there will be no migration of any hazardous constituent into ground water or surface water at any future time.

(f) The owner or operator must design, construct, operate, and maintain a run-on control system capable of preventing flow onto the active portion of the landfill during peak discharge from at least a 25-year storm.

(g) The owner or operator must design, construct, operate, and maintain a run-off management system to collect and control at least the water volume resulting from a 24-hour, 25-year storm.

(h) Collection and holding facilities (e.g., tanks or basins) associated with run-on and run-off control systems must be emptied or otherwise managed expeditiously after storms to maintain design capacity of the system.

(i) If the landfill contains any particulate matter which may be subject to wind dispersal, the owner or operator must cover or otherwise manage the landfill to control wind dispersal.

(j) The Regional Administrator will specify in the permit all design and operating practices that are necessary to ensure that the requirements of this section are satisfied.

(k) Any permit under RCRA 3005(c) which is issued for a landfill located within the State of Alabama shall require the installation of two or more liners and a leachate collection system above and between such liners, notwithstanding any other provision of RCRA.

(Approved by the Office of Management and Budget under control number 2050-0007)

[47 FR 32365, July 26, 1982, as amended at 50 FR 4514, Jan. 31, 1985; 50 FR 28748, July 15, 1985]

§ 264.302 [Reserved]

§ 264.303 Monitoring and inspection.

(a) During construction or installation, liners (except in the case of existing portions of landfills exempt from § 264.301(a)) and cover systems (e.g., membranes, sheets, or coatings) must be inspected for uniformity, damage, and imperfections (*e.g.*, holes, cracks, thin spots, or foreign materials). Immediately after construction or installation:

(1) Synthetic liners and covers must be inspected to ensure tight seams and joints and the absence of tears, punctures, or blisters; and

(2) Soil-based and admixed liners and covers must be inspected for imperfections including lenses, cracks, channels, root holes, or other structural non-uniformities that may cause an increase in the permeability of the liner or cover.

(b) While a landfill is in operation, it must be inspected weekly and after

ment of Transportation (DOT) hazardous materials regulations (49 CFR Parts 173, 178, and 179), if those regulations specify a particular inside container for the waste.

(b) The inside containers must be overpacked in an open head DOT-specification metal shipping container (49 CFR Parts 178 and 179) of no more than 416-liter (110 gallon) capacity and surrounded by, at a minimum, a sufficient quantity of absorbent material to completely absorb all of the liquid contents of the inside containers. The metal outer container must be full after packing with inside containers and absorbent material.

(c) The absorbent material used must not be capable of reacting dangerously with, being decomposed by, or being ignited by the contents of the inside containers in accordance with § 264.17(b).

(d) Incompatible wastes, as defined in § 260.10 of this chapter, must not be placed in the same outside container.

(e) Reactive wastes, other than cyanide- or sulfide-bearing waste as defined in § 261.23(a)(5) of this chapter, must be treated or rendered non-reactive prior to packaging in accordance with paragraphs (a) through (d) of this section. Cyanide- and sulfide-bearing reactive waste may be packed in accordance with paragraphs (a) through (d) of this section without first being treated or rendered non-reactive.

§ 264.317 Special requirements for hazardous wastes FO20, FO21, FO22, FO23, FO26, and FO27.

(a) Hazardous Wastes FO20, FO21, FO22, FO23, FO26, and FO27 must not be placed in a landfills unless the owner or operator operates the landfill in accord with a management plan for these wastes that is approved by the Regional Administrator pursuant to the standards set out in this paragraph, and in accord with all other applicable requirements of this part. The factors to be considered are:

(1) The volume, physical, and chemical characteristics of the wastes, including their potential to migrate through the soil or to volatilize or escape into the atmosphere.

(2) The attenuative properties of underlying and surrounding soils or other materials;

(3) The mobilizing properties of other materials co-disposed with these wastes; and

(4) The effectiveness of additional treatment, design, or monitoring requirements.

(b) The Regional Administrator may determine that additional design, operating, and monitoring requirements are necessary for landfills managing hazardous wastes FO20, FO21, FO22, FO23, FO26, and FO27 in order to reduce the possibility of migration of these wastes to ground water, surface water, or air so as to protect human health and the environment.

[50 FR 2004, Jan. 14, 1985]

Subpart O—Incinerators

§ 264.340 Applicability.

(a) The regulations in this subpart apply to owners or operators of facilities that incinerate hazardous waste, except as § 264.1 provides otherwise. The following facility owners or operators are considered to incinerate hazardous waste:

(1) Owners or operators of hazardous waste incinerators (as defined in § 260.10 of this chapter); and

(2) Owners or operators who burn hazardous waste in boilers or in industrial furnaces in order to destroy them, or who burn hazardous waste in boilers or in industrial furnaces for any recycling purpose and elect to be regulated under this subpart.

(b) After consideration of the waste analysis included with Part B of the permit application, the Regional Administrator, in establishing the permit conditions, must exempt the applicant from all requirements of this subpart except § 264.341 (Waste analysis) and § 264.351 (Closure),

(1) If the Regional Administrator finds that the waste to be burned is:

(i) Listed as a hazardous waste in Part 261, Subpart D, of this chapter solely because it is ignitable (Hazard Code I), corrosive (Hazard Code C), or both; or

(ii) Listed as a hazardous waste in Part 261, Subpart D, of this chapter solely because it is reactive (Hazard Code R) for characteristics other than those listed in § 261.23(a) (4) and (5), and will not be burned when other hazardous wastes are present in the combustion zone; or

(iii) A hazardous waste solely because it possesses the characteristic of ignitability, corrosivity, or both, as determined by the test for characteristics of hazardous wastes under Part 261, Subpart C, of this chapter; or

(iv) A hazardous waste solely because it possesses any of the reactivity characteristics described by § 261.23(a) (1), (2), (3), (6), (7), and (8) of this chapter, and will not be burned when other hazardous wastes are present in the combustion zone; and

(2) If the waste analysis shows that the waste contains none of the hazardous constituents listed in Part 261, Appendix VIII, of this chapter, which would reasonably be expected to be in the waste.

(c) If the waste to be burned is one which is described by paragraphs (b)(1)(i), (ii), (iii), or (iv) of this section and contains insignificant concentrations of the hazardous constituents listed in Part 261, Appendix VIII, of this chapter, then the Regional Administrator may, in establishing permit conditions, exempt the applicant from all requirements of this subpart, except § 264.341 (Waste analysis) and § 264.351 (Closure), after consideration of the waste analysis included with Part B of the permit application, unless the Regional Administrator finds that the waste will pose a threat to human health and the environment when burned in an incinerator.

(d) The owner or operator of an incinerator may conduct trial burns subject only to the requirements of § 270.62 of this chapter (Short term and incinerator permits).

[46 FR 7678, Jan. 23, 1981, as amended at 47 FR 27532, June 24, 1982; 48 FR 14295, Apr. 1, 1983; 50 FR 665, Jan. 4, 1985; 50 FR 49203, Nov. 29, 1985]

§ 264.341 Waste analysis.

(a) As a portion of the trial burn plan required by § 270.62 of this chapter, or with Part B of the permit application, the owner or operator must have included an analysis of the waste feed sufficient to provide all information required by § 270.62(b) or § 270.19 of this chapter. Owners or operators of new hazardous waste incinerators must provide the information required by § 270.62(c) or § 270.19 of this chapter to the greatest extent possible.

(b) Throughout normal operation the owner or operator must conduct sufficient waste analysis to verify that waste feed to the incinerator is within the physical and chemical composition limits specified in his permit (under § 264.345(b)).

(Approved by the Office of Management and Budget under control number 2050-0002)

[46 FR 7678, Jan. 23, 1981, as amended at 47 FR 27532, June 24, 1982; 48 FR 14295, Apr. 1, 1983; 48 FR 30115, June 30, 1983; 50 FR 4514, Jan. 31, 1985]

§ 264.342 Principal organic hazardous constituents (POHCs).

(a) Principal Organic Hazardous Constituents (POHCs) in the waste feed must be treated to the extent required by the performance standard of § 264.343.

(b)(1) One or more POHCs will be specified in the facility's permit, from among those constituents listed in Part 261, Appendix VIII of this chapter, for each waste feed to be burned. This specification will be based on the degree of difficulty of incineration of the organic constituents in the waste and on their concentration or mass in the waste feed, considering the results of waste analyses and trial burns or alternative data submitted with Part B of the facility's permit application. Organic constituents which represent the greatest degree of difficulty of incineration will be those most likely to be designated as POHCs. Constituents are more likely to be designated as POHCs if they are present in large quantities or concentrations in the waste.

(2) Trial POHCs will be designated for performance of trial burns in accordance with the procedure specified in § 270.62 of this chapter for obtaining trial burn permits.

[46 FR 7678, Jan. 23, 1981, as amended at 48 FR 14295, Apr. 1, 1983]

§ 264.343 Performance standards.

An incinerator burning hazardous waste must be designed, constructed, and maintained so that, when operated in accordance with operating requirements specified under § 264.345, it will meet the following performance standards:

(a)(1) Except as provided in paragraph (a)(2) of this section, an incinerator burning hazardous waste must achieve a destruction and removal efficiency (DRE) of 99.99% for each principal organic hazardous constituent (POHC) designated (under § 264.342) in its permit for each waste feed. DRE is determined for each POHC from the following equation:

$$DRE = \frac{(W_{in} - W_{out})}{W_{in}} \times 100\%$$

where:

W_{in} = mass feed rate of one principal organic hazardous constituent (POHC) in the waste stream feeding the incinerator

and

W_{out} = mass emission rate of the same POHC present in exhaust emissions prior to release to the atmosphere.

(2) An incinerator burning hazardous wastes FO20, FO21, FO22, FO23, FO26, or FO27 must achieve a destruction and removal efficiency (DRE) of 99.9999% for each principal organic hazardous constituent (POHC) designated (under § 264.342) in its permit. This performance must be demonstrated on POHCs that are more difficult to incinerate than tetra-, penta-, and hexachlorodibenzo-p-dioxins and dibenzofurans. DRE is determined for each POHC from the equation in § 264.343(a)(1). In addition, the owner or operator of the incinerator must notify the Regional Administrator of his intent to incinerate hazardous wastes FO20, FO21, FO22, FO23, FO26, or FO27.

(b) An incinerator burning hazardous waste and producing stack emissions of more than 1.8 kilograms per hour (4 pounds per hour) of hydrogen chloride (HCl) must control HCl emissions such that the rate of emission is no greater than the larger of either 1.8 kilograms per hour or 1% of the HCl in the stack gas prior to entering any pollution control equipment.

(c) An incinerator burning hazardous waste must not emit particulate matter in excess of 180 milligrams per dry standard cubic meter (0.08 grains per dry standard cubic foot) when corrected for the amount of oxygen in the stack gas according to the formula:

$$P_c = P_m \times \frac{14}{21 - Y}$$

Where P_c is the corrected concentration of particulate matter, P_m is the measured concentration of particulate matter, and Y is the measured concentration of oxygen in the stack gas, using the Orsat method for oxygen analysis of dry flue gas, presented in Part 60, Appendix A (Method 3), of this chapter. This correction procedure is to be used by all hazardous waste incinerators except those operating under conditions of oxygen enrichment. For these facilities, the Regional Administrator will select an appropriate correction procedure, to be specified in the facility permit.

(d) For purposes of permit enforcement, compliance with the operating requirements specified in the permit (under § 264.345) will be regarded as compliance with this section. However, evidence that compliance with those permit conditions is insufficient to ensure compliance with the performance requirements of this section may be "information" justifying modification, revocation, or reissuance of a permit under § 270.41 of this chapter.

[46 FR 7678, Jan. 23, 1981, as amended at 47 FR 27532, June 24, 1982; 48 FR 14295, Apr. 1, 1983; 50 FR 2005, Jan. 14, 1985]

§ 264.344 Hazardous waste incinerator permits.

(a) The owner or operator of a hazardous waste incinerator may burn only wastes specified in his permit and only under operating conditions specified for those wastes under § 264.345, except:

(1) In approved trial burns under § 270.62 of this chapter; or

(2) Under exemptions created by § 264.340.

(b) Other hazardous wastes may be burned only after operating conditions have been specified in a new permit or a permit modification as applicable. Operating requirements for new wastes may be be based on either trial burn results or alternative data included with Part B of a permit application under § 270.19 of this chapter.

(c) The permit for a new hazardous waste incinerator must establish appropriate conditions for each of the applicable requirements of this subpart, including but not limited to allowable waste feeds and operating conditions necessary to meet the requirements of § 264.345, sufficient to comply with the following standards:

(1) For the period beginning with initial introduction of hazardous waste to the incinerator and ending with initiation of the trial burn, and only for the minimum time required to establish operating conditions required in paragraph (c)(2) of this section, not to exceed a duration of 720 hours operating time for treatment of hazardous waste, the operating requirements must be those most likely to ensure compliance with the performance standards of § 264.343, based on the Regional Administrator's engineering judgment. The Regional Administrator may extend the duration of this period once for up to 720 additional hours when good cause for the extension is demonstrated by the applicant.

(2) For the duration of the trial burn, the operating requirements must be sufficient to demonstrate compliance with the performance standards of § 264.343 and must be in accordance with the approved trial burn plan;

(3) For the period immediately following completion of the trial burn, and only for the minimum period sufficient to allow sample analysis, data computation, and submission of the trial burn results by the applicant, and review of the trial burn results and modification of the facility permit by the Regional Administrator, the operating requirements must be those most likely to ensure compliance with the performance standards of § 264.343, based on the Regional Administrator's engineering judgement.

(4) For the remaining duration of the permit, the operating requirements must be those demonstrated, in a trial burn or by alternative data specified in § 270.19(c) of this chapter, as sufficient to ensure compliance with the performance standards of § 264.343.

(Approved by the Office of Management and Budget under control number 2050-0002)

[46 FR 7678, Jan. 23, 1981, as amended at 47 FR 27532, June 24, 1982; 48 FR 14295, Apr. 1, 1983; 50 FR 4514, Jan. 31, 1985]

§ 264.345 Operating requirements.

(a) An incinerator must be operated in accordance with operating requirements specified in the permit. These will be specified on a case-by-case basis as those demonstrated (in a trial burn or in alternative data as specified in § 264.344(b) and included with Part B of a facility's permit application) to be sufficient to comply with the performance standards of § 264.343.

(b) Each set of operating requirements will specify the composition of the waste feed (including acceptable variations in the physical or chemical properties of the waste feed which will not affect compliance with the performance requirement of § 264.343) to which the operating requirements apply. For each such waste feed, the permit will specify acceptable operating limits including the following conditions:

(1) Carbon monoxide (CO) level in the stack exhaust gas;

(2) Waste feed rate;

(3) Combustion temperature;

(4) An appropriate indicator of combustion gas velocity;

(5) Allowable variations in incinerator system design or operating procedures; and

(6) Such other operating requirements as are necessary to ensure that the performance standards of § 264.343 are met.

(c) During start-up and shut-down of an incinerator, hazardous waste (except wastes exempted in accordance with § 264.340) must not be fed into the incinerator unless the incinerator

ator is operating within the conditions of operation (temperature, air feed rate, etc.) specified in the permit.

(d) Fugitive emissions from the combustion zone must be controlled by:

(1) Keeping the combustion zone totally sealed against fugitive emissions; or

(2) Maintaining a combustion zone pressure lower than atmospheric pressure; or

(3) An alternate means of control demonstrated (with Part B of the permit application) to provide fugitive emissions control equivalent to maintenance of combustion zone pressure lower than atmospheric pressure.

(e) An incinerator must be operated with a functioning system to automatically cut off waste feed to the incinerator when operating conditions deviate from limits established under paragraph (a) of this section.

(f) An incinerator must cease operation when changes in waste feed, incinerator design, or operating conditions exceed limits designated in its permit.

(Approved by the Office of Management and Budget under control number 2050-0002)

[46 FR 7678, Jan. 23, 1981, as amended at 47 FR 27532, June 24, 1982; 50 FR 4514, Jan. 31, 1985]

§ 264.346 [Reserved]

§ 264.347 Monitoring and inspections.

(a) The owner or operator must conduct, as a minimum, the following monitoring while incinerating hazardous waste:

(1) Combustion temperature, waste feed rate, and the indicator of combustion gas velocity specified in the facility permit must be monitored on a continuous basis.

(2) CO must be monitored on a continuous basis at a point in the incinerator downstream of the combustion zone and prior to release to the atmosphere.

(3) Upon request by the Regional Administrator, sampling and analysis of the waste and exhaust emissions must be conducted to verify that the operating requirements established in the permit achieve the performance standards of § 264.343.

(b) The incinerator and associated equipment (pumps, valves, conveyors, pipes, etc.) must be subjected to thorough visual inspection, at least daily, for leaks, spills, fugitive emissions, and signs of tampering.

(c) The emergency waste feed cutoff system and associated alarms must be tested at least weekly to verify operability, unless the applicant demonstrates to the Regional Administrator that weekly inspections will unduly restrict or upset operations and that less frequent inspection will be adequate. At a minimum, operational testing must be conducted at least monthly.

(d) This monitoring and inspection data must be recorded and the records must be placed in the operating log required by § 264.73.

(Approved by the Office of Management and Budget under control number 2050-0002)

[46 FR 7678, Jan. 23, 1981, as amended at 47 FR 27533, June 24, 1982; 50 FR 4514, Jan. 31, 1985]

§§ 264.348—264.350 [Reserved]

§ 264.351 Closure.

At closure the owner or operator must remove all hazardous waste and hazardous waste residues (including, but not limited to, ash, scrubber waters, and scrubber sludges) from the incinerator site.

[*Comment:* At closure, as throughout the operating period, unless the owner or operator can demonstrate, in accordance with § 261.3(d) of this chapter, that the residue removed from the incinerator is not a hazardous waste, the owner or operator becomes a generator of hazardous waste and must manage it in accordance with applicable requirements of Parts 262 through 266 of this chapter.]

[46 FR 7678, Jan. 23, 1981]

Subparts P–W [Reserved]

Subpart X—Miscellaneous Units

SOURCE: 52 FR 46964, Dec. 10, 1987, unless otherwise noted.

§ 264.600 Applicability.

The requirements in this subpart apply to owners and operators of facilities that treat, store, or dispose of hazardous waste in miscellaneous units, except as § 264.1 provide otherwise.

§ 264.601 Environmental performance standards.

A miscellaneous unit must be located, designed, constructed, operated, maintained, and closed in a manner that will ensure protection of human health and the environment. Permits for miscellaneous units are to contain such terms and provisions as necessary to protect human health and the environment, including, but not limited to, as appropriate, design and operating requirements, detection and monitoring requirements, and requirements for responses to releases of hazardous waste or hazardous constituents from the unit. Permit terms and provisions shall include those requirements of Subparts I through O of this part, Part 270, and Part 146 that are appropriate for the miscellaneous unit being permitted. Protection of human health and the environment includes, but is not limited to:

(a) Prevention of any releases that may have adverse effects on human heath or the environment due to migration of waste constituents in the ground water or subsurface environment, considering:

(1) The volume and physical and chemical characteristics of the waste in the unit, including its potential for migration through soil, liners, or other containing structures;

(2) The hydrologic and geologic characteristics of the unit and the surrounding area;

(3) The existing quality of ground water, including other sources of contamination and their cumulative impact on the ground water;

(4) The quantity and direction of ground-water flow;

(5) The proximity to and withdrawal rates of current and potential ground-water users;

(6) The patterns of land use in the region;

(7) The potential for deposition or migration of waste constituents into subsurface physical structures, and into the root zone of food-chain crops and other vegetation;

(8) The potential for health risks caused by human exposure to waste constituents; and

(9) The potential for damage to domestic animals, wildlife, crops, vegetation, and physical structures caused by exposure to waste constituents;

(b) Prevention of any releases that may have adverse effects on human health or the environment due to migration of waste constituents in surface water, or wetlands or on the soil surface considering:

(1) The volume and physical and chemical characteristics of the waste in the unit;

(2) The effectiveness and reliability of containing, confining, and collecting systems and structures in preventing migration;

(3) The hydrologic characteristics of the unit and the surrounding area, including the topography of the land around the unit;

(4) The patterns of precipitation in the region;

(5) The quantity, quality, and direction of ground-water flow;

(6) The proximity of the unit to surface waters;

(7) The current and potential uses of nearby surface waters and any water quality standards established for those surface waters;

(8) The existing quality of surface waters and surface soils, including other sources of contamination and their cumulative impact on surface waters and surface soils;

(9) The patterns of land use in the region;

(10) The potential for health risks caused by human exposure to waste constituents; and

(11) The potential for damage to domestic animals, wildlife, crops, vegetation, and physical structures caused by exposure to waste constitutents.

(c) Prevention of any release that may have adverse effects on human health or the environment due to migration of waste constituents in the air, considering:

(1) The volume and physical and chemical characteristics of the waste in the unit, including its potential for the emission and dispersal of gases, aerosols and particulates;

(2) The effectiveness and reliability of systems and structures to reduce or prevent emissions of hazardous constituents to the air;

(3) The operating characteristics of the unit;

(4) The atmospheric, metorologic, and topographic characteristics of the unit and the surrounding area;

(5) The existing quality of the air, including other sources of contamination and their cumulative impact on the air;

(6) The potential for health risks caused by human exposure to waste constituents; and

(7) The potential for damage to domestic animals, wildlife, crops, vegetation, and physical structures caused by exposure to waste constituents.

§ 264.602 Monitoring, analysis, inspection, response, reporting, and corrective action.

Monitoring, testing, analytical data, inspections, response, and reporting procedures and frequencies must ensure compliance with §§ 264.601, 264.15, 264.33, 264.75, 264.76, 264,77, and 264.101 as well as meet any additional requirements needed to protect human health and the environment as specified in the permit.

§ 264.603 Post-closure care.

A miscellaneous unit that is a disposal unit must be maintained in a manner that complies with § 264.601 during the post-closure care period. In addition, if a treatment or storage unit has contaminated soils or ground water that cannot be completely removed or decontaminated during closure, then that unit must also meet the requirements of § 264.601 during post-closure care. The post-closure plan under § 264.118 must specify the procedures that will be used to satisfy this requirement.

APPENDIX I—RECORDKEEPING INSTRUCTIONS

The recordkeeping provisions of § 264.73 specify that an owner or operator must keep a written operating record at his facility. This appendix provides additional instructions for keeping *portions* of the operating record. See § 264.73(b) for additional recordkeeping requirements.

The following information must be recorded, as it becomes available, and maintained in the operating record until closure of the facility in the following manner:

Records of each hazardous waste received, treated, stored, or disposed of at the facility which include the following:

(1) A description by its common name and the EPA Hazardous Waste Number(s) from Part 261 of this chapter which apply to the waste. The waste description also must include the waste's physical form, i.e., liquid, sludge, solid, or contained gas. If the waste is not listed in Part 261, Subpart D, of this chapter, the description also must include the process that produced it (for example, solid filter cake from production of ----, EPA Hazardous Waste Number W051).

Each hazardous waste listed in Part 261, Subpart D, of this chapter, and each hazardous waste characteristic defined in Part 261, Subpart C, of this chapter, has a four-digit EPA Hazardous Waste Number assigned to it. This number must be used for recordkeeping and reporting purposes. Where a hazardous waste contains more than one listed hazardous waste, or where more than one hazardous waste characteristic applies to the waste, the waste description must include all applicable EPA Hazardous Waste Numbers.

(2) The estimated or manifest-reported weight, or volume and density, where applicable, in one of the units of measure specified in Table 1;

TABLE 1

Unit of measure	Symbol[1]	Density
Pounds	P	
Short tons (2000 lbs)	T	
Gallons (U.S.)	G	P/G
Cubic yards	Y	T/Y
Kilograms	K	
Tonnes (1000 kg)	M	
Liters	L	K/L
Cubic meters	C	M/C

[1] Single digit symbols are used here for data processing purposes.

(3) The method(s) (by handling code(s) as specified in Table 2) and date(s) of treatment, storage, or disposal.

TABLE 2—HANDLING CODES FOR TREATMENT, STORAGE, AND DISPOSAL METHODS

Enter the handling code(s) listed below that most closely represents the technique(s) used at the facility to treat, store, or dispose of each quantity of hazardous waste received.

1. Storage
   - S01 Container (barrel, drum, etc.)
   - S02 Tank
   - S03 Waste pile
   - S04 Surface impoundment
   - S05 Other (specify)
2. Treatment
   - (a) Thermal Treatment
   - T06 Liquid injection incinerator
   - T07 Rotary kiln incinerator
   - T08 Fluidized bed incinerator
   - T09 Multiple hearth incinerator
   - T10 Infrared furnace incinerator
   - T11 Molten salt destructor
   - T12 Pyrolysis
   - T13 Wet Air oxidation
   - T14 Calcination
   - T15 Microwave discharge
   - T16 Cement kiln
   - T17 Lime kiln
   - T18 Other (specify)
   - (b) Chemical Treatment
   - T19 Absorption mound
   - T20 Absorption field
   - T21 Chemical fixation
   - T22 Chemical oxidation
   - T23 Chemical precipitation
   - T24 Chemical reduction
   - T25 Chlorination
   - T26 Chlorinolysis
   - T27 Cyanide destruction
   - T28 Degradation
   - T29 Detoxification
   - T30 Ion exchange
   - T31 Neutralization
   - T32 Ozonation
   - T33 Photolysis
   - T34 Other (specify)
   - (c) Physical Treatment
   - (1) Separation of components
   - T35 Centrifugation
   - T36 Clarification
   - T37 Coagulation
   - T38 Decanting
   - T39 Encapsulation
   - T40 Filtration
   - T41 Flocculation
   - T42 Flotation
   - T43 Foaming
   - T44 Sedimentation
   - T45 Thickening
   - T46 Ultrafiltration
   - T47 Other (specify)
   - (2) Removal of Specific Components
   - T48 Absorption-molecular sieve
   - T49 Activated carbon
   - T50 Blending
   - T51 Catalysis
   - T52 Crystallization
   - T53 Dialysis
   - T54 Distillation
   - T55 Electrodialysis
   - T56 Electrolysis
   - T57 Evaporation
   - T58 High gradient magnetic separation
   - T59 Leaching
   - T60 Liquid ion exchange
   - T61 Liquid-liquid extraction
   - T62 Reverse osmosis
   - T63 Solvent recovery
   - T64 Stripping
   - T65 Sand filter
   - T66 Other (specify)
   - (d) Biological Treatment
   - T67 Activated sludge
   - T68 Aerobic lagoon
   - T69 Aerobic tank
   - T70 Anaerobic lagoon
   - T71 Composting
   - T72 Septic tank
   - T73 Spray irrigation
   - T74 Thickening filter
   - T75 Tricking filter
   - T76 Waste stabilization pond
   - T77 Other (specify)
   - T78-79 [Reserved]
3. Disposal
   - D80 Underground injection
   - D81 Landfill
   - D82 Land treatment
   - D83 Ocean disposal
   - D84 Surface impoundment (to be closed as a landfill)
   - D85 Other (specify)

APPENDICES II—III [RESERVED]

APPENDIX IV—COCHRAN'S APPROXIMATION TO THE BEHRENS-FISHER STUDENTS' T-TEST

Using all the available background data (n_b readings), calculate the background mean ($\bar{X}_b$) and background variance (s_b^2). For the single monitoring well under investigation (n_m reading), calculate the monitoring mean ($\bar{X}_m$) and monitoring variance (s_m^2).

For any set of data ($X_1, X_2, \ldots, X_n$) the mean is calculated by:

$$\bar{X} = \frac{X_1 + X_2 t \ldots + X_n}{n}$$

and the variance is calculated by:

$$s^2 = \frac{(X_1 - \bar{X})^2 + (X_2 - \bar{X})^2 \ldots + (X_n - \bar{X})^2}{n-1}$$

where "n" denotes the number of observations in the set of data.

The t-test uses these data summary measures to calculate a t-statistic (t^*) and a comparison t-statistic (t_c). The t^* value is compared to the t_c value and a conclusion reached as to whether there has been a statistically significant change in any indicator parameter.

[46 FR 2872, Jan. 12, 1981]

APPENDIX VI—POLITICAL JURISDICTIONS[1] IN WHICH COMPLIANCE WITH § 264.18(a) MUST BE DEMONSTRATED

ALASKA

Aleutian Islands
Anchorage
Bethel
Bristol Bay
Cordova-Valdez
Fairbanks-Fort Yukon
Juneau
Kenai-Cook Inlet
Ketchikan-Prince of Wales
Kodiak
Lynn Canal-Icy Straits
Palmer-Wasilla-Talkeena
Seward
Sitka
Wade Hampton
Wrangell Petersburg
Yukon-Kuskokwim

ARIZONA

Cochise
Graham
Greenlee
Yuma

CALIFORNIA

All

COLORADO

Archuleta
Conejos
Hinsdale
Mineral
Rio Grande
Saguache

HAWAII

Hawaii

IDAHO

Bannock
Bear Lake
Bingham
Bonneville
Caribou
Cassia
Clark
Franklin
Fremont
Jefferson
Madison
Oneida
Power
Teton

MONTANA

Beaverhead
Broadwater
Cascade
Deer Lodge
Flathead
Gallatin
Granite
Jefferson
Lake
Lewis and Clark
Madison
Meagher
Missoula
Park
Powell
Sanders
Silver Bow
Stillwater
Sweet Grass
Teton
Wheatland

NEVADA

All

NEW MEXICO

Bernalillo
Catron
Grant
Hidalgo
Los Alamos
Rio Arriba
Sandoval
Sante Fe
Sierra
Socorro
Taos
Torrance
Valencia

UTAH

Beaver
Box Elder
Cache
Carbon
Davis
Duchesne
Emery
Garfield
Iron
Juab
Millard
Morgan
Piute
Rich
Salt Lake
Sanpete
Sevier
Summit
Tooele
Utah
Wasatch
Washington
Wayne
Weber

WASHINGTON

Chelan
Clallam
Clark
Cowlitz
Douglas
Ferry
Grant
Grays Harbor
Jefferson
King
Kitsap
Kittitas
Lewis
Mason
Okanogan
Pacific
Pierce
San Juan Islands
Skagit
Skamania
Snohomish
Thurston
Wahkiakum
Whatcom
Yakima

WYOMING

Fremont
Lincoln
Park
Sublette
Teton
Uinta
Yellowstone National Park

[46 FR 57285, Nov. 23, 1981; 47 FR 953, Jan. 8, 1982]

APPENDICES VII—APPENDIX VIII [RESERVED]

[1] These include counties, city-county consolidations, and independent cities. In the case of Alaska, the political jurisdictions are election districts, and, in the case of Hawaii, the political jurisdiction listed is the island of Hawaii.

APPENDIX IX—GROUND-WATER MONITORING LIST[1]

GROUND-WATER MONITORING LIST[1]

Common name[2]	CAS RN[3]	Chemical abstracts service index name[4]	Suggested methods[5]	PQL (µg/L)[6]
Acenaphthene	83-32-9	Acenaphthylene, 1,2-dihydro-	8100	200
			8270	10
Acenaphthylene	208-96-8	Acenaphthylene	8100	200
			8270	10
Acetone	67-64-1	2-Propanone	8240	100
Acetophenone	98-86-2	Ethanone, 1-phenyl-	8270	10
Acetonitrile; Methyl cyanide	75-05-8	Acetonitrile	8015	100
2-Acetylaminofluorene; 2-AAF	53-96-3	Acetamide, N-9H-fluoren-2-yl-	8270	10
Acrolein	107-02-8	2-Propenal	8030	5
			8240	5
Acrylonitrile	107-13-1	2-Propenenitrile	8030	5
			8240	5
Aldrin	309-00-2	1,4:5,8-Dimethanonaphthalene, 1,2,3,4,10,10-hexachloro- 1,4,4a,5,8,8a-hexahydro-(1α,4α,4aβ,5α,8α,8aβ)-	8080	0.05
			8270	10
Allyl chloride	107-05-1	1-Propene, 3-chloro-	8010	5
			8240	100
4-Aminobiphenyl	92-67-1	[1,1'-Biphenyl]-4-amine	8270	10
Aniline	62-53-3	Benzenamine	8270	10
Anthracene	120-12-7	Anthracene	8100	200
			8270	10
Antimony	(Total)	Antimony	6010	300
			7040	2,000
			7041	30
Aramite	140-57-8	Sulfurous acid, 2-chloroethyl 2-[4-(1,1-dimethylethyl)phenoxy]-1-methylethyl ester.	8270	10
Arsenic	(Total)	Arsenic	6010	500
			7060	10
			7061	20
Barium	(Total)	Barium	6010	20
			7080	1,000
Benzene	71-43-2	Benzene	8020	2
			8240	5
Benzo[a]anthracene; Benzanthracene.	56-55-3	Benz[a]anthracene	8100	200
			8270	10
Benzo[b]fluoranthene	205-99-2	Benz[e]acephenanthrylene	8100	200
			8270	10
Benzo[k]fluoranthene	207-08-9	Benzo[k]fluoranthene	8100	200
			8270	10
Benzo[ghi]perylene	191-24-2	Benzo[ghi]perylene	8100	200
			8270	10
Benzo[a]pyrene	50-32-8	Benzo[a]pyrene	8100	200
			8270	10
Benzyl alcohol	100-51-6	Benzenemethanol	8270	20
Beryllium	(Total)	Beryllium	6010	3
			7090	50
			7091	2
alpha-BHC	319-84-6	Cyclohexane, 1,2,3,4,5,6-hexachloro-,(1α,2α,3β,4α,5β,6β)-	8080	0.05
			8250	10
beta-BHC	319-85-7	Cyclohexane, 1,2,3,4,5,6-hexachloro-,(1α,2β,3α,4β,5α,6β)-	8080	0.05
			8250	40
delta-BHC	319-86-8	Cyclohexane, 1,2,3,4,5,6-hexachloro-,(1α,2α,3α,4β,5α,6β)-	8080	0.1
			8250	30
gamma-BHC; Lindane	58-89-9	Cyclohexane, 1,2,3,4,5,6-hexachloro-,(1α,2α,3β,4α,5α,6β)-	8080	0.05
			8250	10
Bis(2-chloroethoxy)methane	111-91-1	Ethane, 1,1'-[methylenebis (oxy)]bis[2-chloro-	8270	10
Bis(2-chloroethyl)ether	111-44-4	Ethane, 1,1'-oxybis[2-chloro-	8270	10
Bis(2-chloro-1-methylethyl) ether; 2,2'-Di- chlorodisopropyl ether.	108-60-1	Propane, 2,2'-oxybis[1-chloro-	8010	100
			8270	10

The t-statistic for all parameters except pH and similar monitoring parameters is:

$$t^* = \frac{\bar{X}_m - \bar{X}_b}{\sqrt{\frac{S_m^2}{n_m} + \frac{S_b^2}{n_b}}}$$

If the value of this t-statistic is negative then there is no significant difference between the monitoring data and background data. It should be noted that significantly small negative values may be indicative of a failure of the assumption made for test validity or errors have been made in collecting the background data.

The t-statistic (t_c), against which t^* will be compared, necessitates finding t_b and t_m from standard (one-tailed) tables where,

t_b=t-tables with (n_b−1) degrees of freedom, at the 0.05 level of significance.

t_m=t-tables with (n_m−1) degrees of freedom, at the 0.05 level of significance.

Finally, the special weightings W_b and W_m are defined as:

$$W_b = \frac{s_b^2}{n_b} \quad \text{and} \quad W_m = \frac{s_m^2}{n_m}$$

and so the comparison t-statistic is:

$$t_c = \frac{W_b t_b + W_m t_m}{W_b + W_m}$$

The t-statistic (t^*) is now compared with the comparison t-statistic (t_c) using the following decision-rule:

If *t^* is equal to or larger than* t_c, then conclude that there most likely *has been a significant increase* in this specific parameter.

If *t^* is less than* t_c, then conclude that most likely *there has not been a change* in this specific parameter.

The t-statistic for testing pH and similar monitoring parameters is constructed in the same manner as previously described except the negative sign (if any) is discarded and the caveat concerning the negative value is ignored. The standard (two-tailed) tables are used in the construction t_c for pH and similar monitoring parameters.

If t^* is equal to or larger than t_c, then conclude that there most likely *has been a significant increase* (if the initial t^* had been negative, this would imply a significant decrease). If t^* is less than t_c, then conclude that there most likely has been no change.

A further discussion of the test may be d in *Statistical Methods* (6th Edition, Section 4.14) by G. W. Snedecor and W. G. Cochran, or *Principles and Procedures of Statistics* (1st Edition, Section 5.8) by R. G. D. Steel and J. H. Torrie.

STANDARD T-TABLES 0.05 LEVEL OF SIGNIFICANCE

Degrees of freedom	t-values (one-tail)	t-values (two-tail)
1	6.314	12.706
2	2.920	4.303
3	2.353	3.182
4	2.132	2.776
5	2.015	2.571
6	1.943	2.447
7	1.895	2.365
8	1.860	2.306
9	1.833	2.262
10	1.812	2.228
11	1.796	2.201
12	1.782	2.179
13	1.771	2.160
14	1.761	2.145
15	1.753	2.131
16	1.746	2.120
17	1.740	2.110
18	1.734	2.101
19	1.729	2.093
20	1.725	2.086
21	1.721	2.080
22	1.717	2.074
23	1.714	2.069
24	1.711	2.064
25	1.708	2.060
30	1.697	2.042
40	1.684	2.021

Adopted from Table III of *"Statistical Tables for Biological, Agricultural, and Medical Research"* (1947, R. A. Fisher and F. Yates).

[47 FR 32367, July 26, 1982]

APPENDIX V—EXAMPLES OF POTENTIALLY INCOMPATIBLE WASTE

Many hazardous wastes, when mixed with other waste or materials at a hazardous waste facility, can produce effects which are harmful to human health and the environment, such as (1) heat or pressure, (2) fire or explosion, (3) violent reaction, (4) toxic dusts, mists, fumes, or gases, or (5) flammable fumes or gases.

Below are examples of potentially incompatible wastes, waste components, and materials, along with the harmful consequences which result from mixing materials in one group with materials in another group. The list is intended as a guide to owners or operators of treatment, storage, and disposal facilities, and to enforcement and permit granting officials, to indicate the need for special precautions when managing these potentially incompatible waste materials or components.

This list is not intended to be exhaustive. An owner or operator must, as the regulations require, adequately analyze his wastes so that he can avoid creating uncontrolled substances or reactions of the type listed below, whether they are listed below or not.

It is possible for potentially incompatible wastes to be mixed in a way that precludes a reaction (e.g., adding acid to water rather than water to acid) or that neutralizes them (e.g., a strong acid mixed with a strong base), or that controls substances produced (e.g., by generating flammable gases in a closed tank equipped so that ignition cannot occur, and burning the gases in an incinerator).

In the lists below, the mixing of a Group A material with a Group B material may have the potential consequence as noted.

GROUP 1-A

Acetylene sludge
Alkaline caustic liquids
Alkaline cleaner
Alkaline corrosive liquids
Alkaline corrosive battery fluid
Caustic wastewater
Lime sludge and other corrosive alkalies
Lime wastewater
Lime and water
Spent caustic

GROUP 1-B

Acid sludge
Acid and water
Battery acid
Chemical cleaners
Electrolyte, acid
Etching acid liquid or solvent
Pickling liquor and other corrosive acids
Spent acid
Spent mixed acid
Spent sulfuric acid

Potential consequences: Heat generation; violent reaction.

GROUP 2-A

Aluminum
Beryllium
Calcium
Lithium
Magnesium
Potassium
Sodium
Zinc powder
Other reactive metals and metal hydrides

GROUP 2-B

Any waste in Group 1-A or 1-B

Potential consequences: Fire or explosion; generation of flammable hydrogen gas.

GROUP 3-A

Alcohols
Water

GROUP 3-B

Any concentrated waste in Groups 1-A or 1-B
Calcium
Lithium
Metal hydrides
Potassium
SO_3Cl_2, $SOCl_2$, PCl_3, CH_3SiCl_3
Other water-reactive waste

Potential consequences: Fire, explosion, or heat generation; generation of flammable or toxic gases.

GROUP 4-A

Alcohols
Aldehydes
Halogenated hydrocarbons
Nitrated hydrocarbons
Unsaturated hydrocarbons
Other reactive organic compounds and solvents

GROUP 4-B

Concentrated Group 1-A or 1-B wastes
Group 2-A wastes

Potential consequences: Fire, explosion, or violent reaction.

GROUP 5-A

Spent cyanide and sulfide solutions

GROUP 5-B

Group 1-B wastes

Potential consequences: Generation of toxic hydrogen cyanide or hydrogen sulfide gas.

GROUP 6-A

Chlorates
Chlorine
Chlorites
Chromic acid
Hypochlorites
Nitrates
Nitric acid, fuming
Perchlorates
Permanganates
Peroxides
Other strong oxidizers

GROUP 6-B

Acetic acid and other organic acids
Concentrated mineral acids
Group 2-A wastes
Group 4-A wastes
Other flammable and combustible wastes

Potential consequences: Fire, explosion, or violent reaction.

Source: "Law, Regulations, and Guidelines for Handling of Hazardous Waste." California Department of Health, February 1975.

GROUND-WATER MONITORING LIST [1]—Continued

Common name [2]	CAS RN [3]	Chemical abstracts service index name [4]	Suggested methods [5]	PQL (µg/L) [6]
1,4-Dioxane	123-91-1	1,4-Dioxane	8015	150
Diphenylamine	122-39-4	Benzenamine, N-phenyl-	8270	10
Disulfoton	298-04-4	Phosphorodithioic acid, O,O-diethyl S-[2-(ethylthio)ethyl]ester	8140	2
			8270	10
Endosulfan I	959-98-8	6,9-Methano-2,4,3-benzodioxathiepin, 6,7,8,9,10,10-hexachloro-1,5,5a,6,9,9a-hexahydro-, 3-oxide, (3α,5aβ,6α,9α,9aβ)-.	8080	0.1
			8250	10
Endosulfan II	33213-65-9	6,9-Methano-2,4,3-benzodioxathiepin, 6,7,8,9,10,10-hexachloro- 1,5,5a,6,9,9a-hexahydro-, 3-oxide, (3α,5aα,6β,9β,9aα)-	8080	0.05
Endosulfan sulfate	1031-07-8	6,9-Methano-2,4,3-benzodioxathiepin, 6,7,8,9,10,10-hexachloro- 1,5,5a,6,9,9a-hexahydro-, 3,3-dioxide.	8080	0.5
			8270	10
Endrin	72-20-8	2,7:3,6-Dimethanonaphth[2,3-b]oxirene, 3,4,5,6,9,9-hexachloro-1a,2,2a,3,6,6a,7,7a-octahydro-, (1aα, 2β,2aβ,3α,6α, 6aβ,7β,7aα)-	8080	0.1
			8250	10
Endrin aldehyde	7421-93-4	1,2,4-Methenocyclopenta[cd]pentalene-5-carboxaldehyde, 2,2a,3,3,4,7-hexachlorodecahydro-, (1α,2β,2aβ,4β,4aβ,5β,6aβ,6bβ,7R*)-	8080	0.2
			8270	10
Ethylbenzene	100-41-4	Benzene, ethyl-	8020	2
			8240	5
Ethyl methacrylate	97-63-2	2-Propenoic acid, 2-methyl-, ethyl ester	8015	10
			8240	5
			8270	10
Ethyl methanesulfonate	62-50-0	Methanesulfonic acid, ethyl ester	8270	10
Famphur	52-85-7	Phosphorothioic acid, O-[4-[(dimethylamino)sulfonyl]phenyl]-O,O-dimethyl ester.	8270	10
Fluoranthene	206-44-0	Fluoranthene	8100	200
			8270	10
Fluorene	86-73-7	9H-Fluorene	8100	200
			8270	10
Heptachlor	76-44-8	4,7-Methano-1H-indene, 1,4,5,6,7,8,8-heptachloro-3a,4,7,7a-tetrahydro-	8080	0.05
			8270	10
Heptachlor epoxide	1024-57-3	2,5-Methano-2H-indeno[1,2-b]oxirene, 2,3,4,5,6,7,7-heptachloro-1a,1b,5,5a,6,6a,-hexahydro-, (1aα,1bβ,2α,5α,5aβ,6β,6aα)	8080	1
			8270	10
Hexachlorobenzene	118-74-1	Benzene, hexachloro-	8120	0.5
			8270	10
Hexachlorobutadiene	87-68-3	1,3-Butadiene, 1,1,2,3,4,4-hexachloro-	8120	5
			8270	10
Hexachlorocyclopentadiene	77-47-4	1,3-Cyclopentadiene, 1,2,3,4,5,5-hexachloro-	8120	5
			8270	10
Hexachloroethane	67-72-1	Ethane, hexachloro-	8120	0.5
			8270	10
Hexachlorophene	70-30-4	Phenol, 2,2'-methylenebis[3,4,6-trichloro-	8270	10
Hexachloropropene	1888-71-7	1-Propene, 1,1,2,3,3,3-hexachloro-	8270	10
2-Hexanone	591-78-6	2-Hexanone	8240	50
Indeno(1,2,3-cd)pyrene	193-39-5	Indeno[1,2,3-cd]pyrene	8100	200
			8270	10
Isobutyl alcohol	78-83-1	1-Propanol, 2-methyl-	8015	50
Isodrin	465-73-6	1,4,5,8-Dimethanonaphthalene,1,2,3,4,10,10-hexachloro-1,4,4a,5,8,8a hexahydro-(1α,4α,4aβ,5β,8β,8aβ)-	8270	10
Isophorone	78-59-1	2-Cyclohexen-1-one, 3,5,5-trimethyl-	8090	60
			8270	10
Isosafrole	120-58-1	1,3-Benzodioxole, 5-(1-propenyl)-	8270	10
Kepone	143-50-0	1,3,4-Metheno-2H-cyclobuta- [cd]pentalen-2-one, 1,1a,3,3a,4,5,5,5a,5b,6-decachlorooctahydro-	8270	10
Lead	(Total)	Lead	6010	40
			7420	1,000
			7421	10
Mercury	(Total)	Mercury	7470	2
Methacrylonitrile	126-98-7	2-Propenenitrile, 2-methyl-	8015	5
			8240	5
Methapyrilene	91-80-5	1,2,Ethanediamine, N,N-dimethyl-N'-2-pyridinyl-N'-(2-thienylmethyl)-	8270	10

GROUND-WATER MONITORING LIST [1]—Continued

Common name [2]	CAS RN [3]	Chemical abstracts service index name [4]	Suggested methods [5]	PQL (µg/L) [6]
Methoxychlor	72-43-5	Benzene, 1,1'-(2,2,2,trichloroethylidene)bis[4-methoxy-.	8080	2
			8270	10
Methyl bromide; Bromomethane	74-83-9	Methane, bromo-	8010	20
			8240	10
Methyl chloride; Chloromethane	74-87-3	Methane, chloro-	8010	1
			8240	10
3-Methylcholanthrene	56-49-5	Benz[j]aceanthrylene, 1,2-dihydro-3-methyl-	8270	10
Methylene bromide; Dibromomethane.	74-95-3	Methane, dibromo-	8010	15
			8240	5
Methylene chloride; Dichloromethane.	75-09-2	Methane, dichloro-	8010	5
			8240	5
Methyl ethyl ketone; MEK	78-93-3	2-Butanone	8015	10
			8240	100
Methyl iodide; Iodomethane	74-88-4	Methane, iodo-	8010	40
			8240	5
Methyl methacrylate	80-62-6	2-Propenoic acid, 2-methyl-, methyl ester	8015	2
			8240	5
Methyl methanesulfonate	66-27-3	Methanesulfonic acid, methyl ester	8270	10
2-Methylnaphthalene	91-57-6	Naphthalene, 2-methyl-	8270	10
Methyl parathion; Parathion methyl	298-00-0	Phosphorothioic acid, O,O-dimethyl O-(4-nitrophenyl) ester.	8140	0.5
			8270	10
4-Methyl-2-pentanone; Methyl isobutyl ketone.	108-10-1	2-Pentanone, 4-methyl-	8015	5
			8240	50
Naphthalene	91-20-3	Naphthalene	8100	200
			8270	10
1,4-Naphthoquinone	130-15-4	1,4-Naphthalenedione	8270	10
1-Naphthylamine	134-32-7	1-Naphthalenamine	8270	10
2-Naphthylamine	91-59-8	2-Naphthalenamine	8270	10
Nickel	(Total)	Nickel	6010	50
			7520	400
o-Nitroaniline	88-74-4	Benzenamine, 2-nitro-	8270	50
m-Nitroaniline	99-09-2	Benzenamine, 3-nitro-	8270	50
p-Nitroaniline	100-01-6	Benzenamine, 4-nitro-	8270	50
Nitrobenzene	98-95-3	Benzene, nitro-	8090	40
			8270	10
o-Nitrophenol	88-75-5	Phenol, 2-nitro-	8040	5
			8270	10
p-Nitrophenol	100-02-7	Phenol, 4-nitro-	8040	10
			8270	50
4-Nitroquinoline 1-oxide	56-57-5	Quinoline, 4-nitro-, 1-oxide	8270	10
N-Nitrosodi-n-butylamine	924-16-3	1-Butanamine, N-butyl-N-nitroso-	8270	10
N-Nitrosodiethylamine	55-18-5	Ethanamine, N-ethyl-N-nitroso-	8270	10
N-Nitrosodimethylamine	62-75-9	Methanamine, N-methyl-N-nitroso-	8270	10
N-Nitrosodiphenylamine	86-30-6	Benzenamine, N-nitroso-N-phenyl-	8270	10
N-Nitrosodipropylamine; Di-n-propylnitrosamine.	621-64-7	1-Propanamine, N-nitroso-N-propyl-	8270	10
N-Nitrosomethylethylamine	10595-95-6	Ethanamine, N-methyl-N-nitroso-	8270	10
N-Nitrosomorpholine	59-89-2	Morpholine, 4-nitroso-	8270	10
N-Nitrosopiperidine	100-75-4	Piperidine, 1-nitroso-	8270	10
N-Nitrosopyrrolidine	930-55-2	Pyrrolidine, 1-nitroso-	8270	10
5-Nitro-o-toluidine	99-55-8	Benzenamine, 2-methyl-5-nitro-	8270	10
Parathion	56-38-2	Phosphorothioic acid, O,O-diethyl-O-(4-nitrophenyl) ester	8270	10
Polychlorinated biphenyls; PCBs	See Note 7	1,1'-Biphenyl, chloro derivatives	8080	50
			8250	100
Polychlorinated dibenzo-p-dioxins; PCDDs.	See Note 8	Dibenzo[b,e][1,4]dioxin, chloro derivatives	8280	0.01
Polychlorinated dibenzofurans; PCDFs.	See Note 9	Dibenzofuran, chloro derivatives	8280	0.01
Pentachlorobenzene	608-93-5	Benzene, pentachloro-	8270	10
Pentachloroethane	76-01-7	Ethane, pentachloro-	8240	5
			8270	10
Pentachloronitrobenzene	82-68-8	Benzene, pentachloronitro-	8270	10
Pentachlorophenol	87-86-5	Phenol, pentachloro-	8040	5
			8270	50
Phenacetin	62-44-2	Acetamide, N-(4-ethoxyphenyl)	8270	10
Phenanthrene	85-01-8	Phenanthrene	8100	200
			8270	10

GROUND-WATER MONITORING LIST [1]—Continued

Common name [2]	CAS RN [3]	Chemical abstracts service index name [4]	Suggested methods [5]	PQL (μg/L) [6]
Bis(2-ethylhexyl) phthalate	117-81-7	1,2-Benzenedicarboxylic acid, bis(2-ethylhexyl)ester.	8060	20
			8270	10
Bromodichloromethane	75-27-4	Methane, bromodichloro-	8010	1
			8240	5
Bromoform; Tribromomethane	75-25-2	Methane, tribromo-	8010	2
			8240	5
4-Bromophenyl phenyl ether	101-55-3	Benzene, 1-bromo-4-phenoxy-	8270	10
Butyl benzyl phthalate; Benzyl butyl phthalate	85-68-7	1,2-Benzenedicarboxylic acid, butyl phenylmethyl ester.	8060	5
			8270	10
Cadmium	(Total)	Cadmium	6010	40
			7130	50
			7131	1
Carbon disulfide	75-15-0	Carbon disulfide	8240	5
Carbon tetrachloride	56-23-5	Methane, tetrachloro-	8010	1
			8240	5
Chlordane	57-74-9	4,7-Methano-1H-indene, 1,2,4,5,6,7,8,8-octachloro-2,3,3a,4,7,7a-hexahydro-.	8080	0.1
			8250	10
p-Chloroaniline	106-47-8	Benzenamine, 4-chloro-	8270	20
Chlorobenzene	108-90-7	Benzene, chloro-	8010	2
			8020	2
			8240	5
Chlorobenzilate	510-15-6	Benzeneacetic acid, 4-chloro-α-(4-chlorophenyl)-α-hydroxy-, ethyl ester.	8270	10
p-Chloro-m-cresol	59-50-7	Phenol, 4-chloro-3-methyl-	8040	5
			8270	20
Chloroethane; Ethyl chloride	75-00-3	Ethane, chloro-	8010	5
			8240	10
Chloroform	67-66-3	Methane, trichloro-	8010	0.5
			8240	5
2-Chloronaphthalene	91-58-7	Naphthalene, 2-chloro-	8120	10
			8270	10
2-Chlorophenol	95-57-8	Phenol, 2-chloro-	8040	5
			8270	10
4-Chlorophenyl phenyl ether	7005-72-3	Benzene, 1-chloro-4-phenoxy-	8270	10
Chloroprene	126-99-8	1,3-Butadiene, 2-chloro-	8010	50
			8240	5
Chromium	(Total)	Chromium	6010	70
			7190	500
			7191	10
Chrysene	218-01-9	Chrysene	8100	200
			8270	10
Cobalt	(Total)	Cobalt	6010	70
			7200	500
			7201	10
Copper	(Total)	Copper	6010	60
			7210	200
m-Cresol	108-39-4	Phenol, 3-methyl-	8270	10
o-Cresol	95-48-7	Phenol, 2-methyl-	8270	10
p-Cresol	106-44-5	Phenol, 4-methyl-	8270	10
Cyanide	57-12-5	Cyanide	9010	40
2,4-D; 2,4-Dichlorophenoxyacetic acid.	94-75-7	Acetic acid, (2,4-dichlorophenoxy)-	8150	10
4,4'-DDD	72-54-8	Benzene 1,1'-(2,2-dichloroethylidene)bis[4-chloro-	8080	0.1
			8270	10
4,4'-DDE	72-55-9	Benzene, 1,1'-(dichloroethenylidene)bis[4-chloro-	8080	0.05
			8270	10
4,4'-DDT	50-29-3	Benzene, 1,1'-(2,2,2-trichloroethylidene)bis[4-chloro-.	8080	0.1
			8270	10
Diallate	2303-16-4	Carbamothioic acid, bis(1-methylethyl)- , S- (2,3-dichloro-2-propenyl) ester.	8270	10
Dibenz[a,h]anthracene	53-70-3	Dibenz[a,h]anthracene	8100	200
			8270	10
Dibenzofuran	132-64-9	Dibenzofuran	8270	10
Dibromochloromethane; Chlorodibromomethane	124-48-1	Methane, dibromochloro-	8010	1
			8240	5
1,2-Dibromo-3-chloropropane; DBCP.	96-12-8	Propane, 1,2-dibromo-3-chloro-	8010	100
			8240	5
			8270	10

GROUND-WATER MONITORING LIST [1]—Continued

Common name [2]	CAS RN [3]	Chemical abstracts service index name [4]	Suggested methods [5]	PQL (μg/L) [6]
1,2-Dibromoethane; Ethylene dibromide.	106-93-4	Ethane, 1,2-dibromo-	8010	10
			8240	5
Di-n-butyl phthalate	84-74-2	1,2-Benzenedicarboxylic acid, dibutyl ester	8060	5
			8270	10
o-Dichlorobenzene	95-50-1	Benzene, 1,2-dichloro-	8010	2
			8020	5
			8120	10
			8270	10
m-Dichlorobenzene	541-73-1	Benzene, 1,3-dichloro-	8010	5
			8020	5
			8120	10
			8270	10
p-Dichlorobenzene	106-46-7	Benzene, 1,4-dichloro-	8010	2
			8020	5
			8120	15
			8270	10
3,3'-Dichlorobenzidine	91-94-1	[1,1'-Biphenyl]-4,4'-diamine, 3,3'-dichloro-	8270	20
trans-1,4-Dichloro-2-butene	110-57-6	2-Butene, 1,4-dichloro-, (E)-	8240	5
Dichlorodifluoromethane	75-71-8	Methane, dichlorodifluoro-	8010	10
			8240	5
1,1-Dichloroethane	75-34-3	Ethane, 1,1-dichloro-	8010	1
			8240	5
1,2-Dichloroethane; Ethylene dichloride.	107-06-2	Ethane, 1,2-dichloro-	8010	0.5
			8240	5
1,1-Dichloroethylene; Vinylidene chloride.	75-35-4	Ethene, 1,1-dichloro-	8010	1
			8240	5
trans-1,2-Dichloroethylene	156-60-5	Ethene, 1,2-dichloro-, (E)-	8010	1
			8240	5
2,4-Dichlorophenol	120-83-2	Phenol, 2,4-dichloro-	8040	5
			8270	10
2,6-Dichlorophenol	87-65-0	Phenol, 2,6-dichloro-	8270	10
1,2-Dichloropropane	78-87-5	Propane, 1,2-dichloro-	8010	0.5
			8240	5
cis-1,3-Dichloropropene	10061-01-5	1-Propene, 1,3-dichloro-, (Z)-	8010	20
			8240	5
trans-1,3-Dichloropropene	10061-02-6	1-Propene, 1,3-dichloro-, (E)-	8010	5
			8240	5
Dieldrin	60-57-1	2,7:3,6-Dimethanonaphth[2,3-b]oxirene, 3,4,5,6,9,9-hexachloro-1a,2,2a,3,6,6a,7,7a-octahydro-, (1aα,2β,2aα,3β,6β,6aα,7β,7aα)-	8080	0.05
			8270	10
Diethyl phthalate	84-66-2	1,2-Benzenedicarboxylic acid, diethyl ester	8060	5
			8270	10
O,O-Diethyl O-2-pyrazinyl phosphorothioate; Thionazin	297-97-2	Phosphorothioic acid, O,O-diethyl O-pyrazinyl ester.	8270	10
Dimethoate	60-51-5	Phosphorodithioic acid, O,O-dimethyl S-[2-(methylamino)-2-oxoethyl] ester.	8270	10
p-(Dimethylamino)azobenzene	60-11-7	Benzenamine, N,N-dimethyl-4-(phenylazo)-	8270	10
7,12-Dimethylbenz[a]anthracene	57-97-6	Benz[a]anthracene, 7,12-dimethyl-	8270	10
3,3'-Dimethylbenzidine	119-93-7	[1,1'-Biphenyl]-4,4'-diamine, 3,3'-dimethyl-	8270	10
alpha, alpha-Dimethylphenethylamine.	122-09-8	Benzeneethanamine, α,α-dimethyl-	8270	10
2,4-Dimethylphenol	105-67-9	Phenol, 2,4-dimethyl-	8040	5
			8270	10
Dimethyl phthalate	131-11-3	1,2-Benzenedicarboxylic acid, dimethyl ester	8060	5
			8270	10
m-Dinitrobenzene	99-65-0	Benzene, 1,3-dinitro-	8270	10
4,6-Dinitro-o-cresol	534-52-1	Phenol, 2-methyl-4,6-dinitro-	8040	150
			8270	50
2,4-Dinitrophenol	51-28-5	Phenol, 2,4-dinitro-	8040	150
			8270	50
2,4-Dinitrotoluene	121-14-2	Benzene, 1-methyl-2,4-dinitro-	8090	0.2
			8270	10
2,6-Dinitrotoluene	606-20-2	Benzene, 2-methyl-1,3-dinitro-	8090	0.1
			8270	10
Dinoseb; DNBP; 2-sec-Butyl-4,6-dinitrophenol	88-85-7	Phenol, 2-(1-methylpropyl)-4,6-dinitro-	8150	1
			8270	10
Di-n-octyl phthalate	117-84-0	1,2-Benzenedicarboxylic acid, dioctyl ester	8060	30
			8270	10

20-142 O—88——20

GROUND-WATER MONITORING LIST [1]—Continued

Common name [2]	CAS RN [3]	Chemical abstracts service index name [4]	Suggested methods [5]	PQL (µg/L) [6]
Phenol	108-95-2	Phenol	8040	1
			8270	10
p-Phenylenediamine	106-50-3	1,4-Benzenediamine	8270	10
Phorate	298-02-2	Phosphorodithioic acid, O,O-diethyl S-[(ethylthio)methyl] ester	8140	2
			8270	10
2-Picoline	109-06-8	Pyridine, 2-methyl-	8240	5
			8270	10
Pronamide	23950-58-5	Benzamide, 3,5-dichloro-N-(1,1-dimethyl-2-propynyl)-.	8270	10
Propionitrile; Ethyl cyanide	107-12-0	Propanenitrile	8015	60
			8240	5
Pyrene	129-00-0	Pyrene	8100	200
			8270	10
Pyridine	110-86-1	Pyridine	8240	5
			8270	10
Safrole	94-59-7	1,3-Benzodioxole, 5-(2-propenyl)-	8270	10
Selenium	(Total)	Selenium	6010	750
			7740	20
			7741	20
Silver	(Total)	Silver	6010	70
			7760	100
Silvex; 2,4,5-TP	93-72-1	Propanoic acid, 2-(2,4,5-trichlorophenoxy)-	8150	2
Styrene	100-42-5	Benzene, ethenyl-	8020	1
			8240	5
Sulfide	18496-25-8	Sulfide	9030	10,000
2,4,5-T; 2,4,5-Trichlorophenoxyacetic acid.	93-76-5	Acetic acid, (2,4,5-trichlorophenoxy)-	8150	2
2,3,7,8-TCDD; 2,3,7,8-Tetrachlorodibenzo-p-dioxin	1746-01-6	Dibenzo[b,e][1,4]dioxin, 2,3,7,8-tetrachloro-	8280	0.005
1,2,4,5-Tetrachlorobenzene	95-94-3	Benzene, 1,2,4,5-tetrachloro-	8270	10
1,1,1,2-Tetrachloroethane	630-20-6	Ethane, 1,1,1,2-tetrachloro-	8010	5
			8240	5
1,1,2,2-Tetrachloroethane	79-34-5	Ethane, 1,1,2,2-tetrachloro-	8010	0.5
			8240	5
Tetrachloroethylene; Perchloroethylene; Tetrachloroethene	127-18-4	Ethene, tetrachloro-	8010	0.5
			8240	5
2,3,4,6-Tetrachlorophenol	58-90-2	Phenol, 2,3,4,6-tetrachloro-	8270	10
Tetraethyl dithiopyrophosphate; Sulfotepp	3689-24-5	Thiodiphosphoric acid ([(HO)$_2$P(S)]$_2$O), tetraethyl ester	8270	10
Thallium	(Total)	Thallium	6010	400
			7840	1,000
			7841	10
Tin	(Total)	Tin	7870	8,000
Toluene	108-88-3	Benzene, methyl-	8020	2
			8240	5
o-Toluidine	95-53-4	Benzenamine, 2-methyl-	8270	10
Toxaphene	8001-35-2	Toxaphene	8080	2
			8250	10
1,2,4-Trichlorobenzene	120-82-1	Benzene, 1,2,4-trichloro-	8270	10
1,1,1-Trichloroethane; Methylchloroform.	71-55-6	Ethane, 1,1,1-trichloro-	8240	5
1,1,2-Trichloroethane	79-00-5	Ethane, 1,1,2-trichloro-	8010	0.2
			8240	5
Trichloroethylene; Trichloroethene	79-01-6	Ethene, trichloro-	8010	1
			8240	5
Trichlorofluoromethane	75-69-4	Methane, trichlorofluoro-	8010	10
			8240	5
2,4,5-Trichlorophenol	95-95-4	Phenol, 2,4,5-trichloro-	8270	10
2,4,6-Trichlorophenol	88-06-2	Phenol, 2,4,6-trichloro-	8040	5
			8270	10
1,2,3-Trichloropropane	96-18-4	Propane, 1,2,3-trichloro-	8010	10
			8240	5
O,O,O-Triethyl phosphorothioate	126-68-1	Phosphorothioic acid, O,O,O-triethyl ester	8270	10
sym-Trinitrobenzene	99-35-4	Benzene, 1,3,5-trinitro-	8270	10
Vanadium	(Total)	Vanadium	6010	80
			7910	2,000
			7911	40
Vinyl acetate	108-05-4	Acetic acid, ethenyl ester	8240	5

GROUND-WATER MONITORING LIST [1]—Continued

Common name [2]	CAS RN [3]	Chemical abstracts service index name [4]	Suggested methods [5]	PQL (µg/L) [6]
Vinyl chloride	75-01-4	Ethene, chloro-	8010	2
			8240	10
Xylene (total)	1330-20-7	Benzene, dimethyl-	8020	5
			8240	5
Zinc	(Total)	Zinc	6010	20
			7950	50

[1] The regulatory requirements pertain only to the list of substances; the right hand columns (Methods and PQL) are given for informational purposes only. See also footnotes 5 and 6.

[2] Common names are those widely used in government regulations, scientific publications, and commerce; synonyms exist for many chemicals.

[3] Chemical Abstracts Service registry number. Where "Total" is entered, all species in the ground water that contain this element are included.

[4] CAS index names are those used in the 9th Cumulative Index.

[5] Suggested Methods refer to analytical procedure numbers used in EPA Report SW-846 "Test Methods for Evaluating Solid Waste", third edition, November 1986. Analytical details can be found in SW-846 and in documentation on file at the agency. CAUTION: The methods listed are representative SW-846 procedures and may not always be the most suitable method(s) for monitoring an analyte under the regulations.

[6] Practical Quantitation Limits (PQLs) are the lowest concentrations of analytes in ground waters that can be reliably determined within specified limits of precision and accuracy by the indicated methods under routine laboratory operating conditions. The PQLs listed are generally stated to one significant figure. CAUTION: The PQL values in many cases are based only on a general estimate for the method and not on a determination for individual compounds; PQLs are not a part of the regulation.

[7] Polychlorinated biphenyls (CAS RN 1336-36-3); this category contains congener chemicals, including constituents of Aroclor-1016 (CAS RN 12674-11-2), Aroclor-1221 (CAS RN 11104-28-2), Aroclor-1232 (CAS RN 11141-16-5), Aroclor-1242 (CAS RN 53469-21-9), Aroclor-1248 (CAS RN 12672-29-6), Aroclor-1254 (CAS RN 11097-69-1), and Aroclor-1260 (CAS RN 11096-82-5). The PQL shown is an average value for PCB congeners.

[8] This category contains congener chemicals, including tetrachlorodibenzo-p-dioxins (see also 2,3,7,8-TCDD), pentachlorodibenzo-p-dioxins, and hexachlorodibenzo-p-dioxins. The PQL shown is an average value for PCDD congeners.

[9] This category contains congener chemicals, including tetrachlorodibenzofurans, pentachlorodibenzofurans, and hexachlorodibenzofurans. The PQL shown is an average value for PCDF congeners.

[52 FR 25947, July 9, 1987]

PART 265—INTERIM STATUS STANDARDS FOR OWNERS AND OPERATORS OF HAZARDOUS WASTE TREATMENT, STORAGE, AND DISPOSAL FACILITIES

Subpart A—General

Sec.
265.1 Purpose, scope, and applicability.
265.2—265.3 [Reserved]
265.4 Imminent hazard action.

Subpart B—General Facility Standards

265.10 Applicability.
265.11 Identification number.
265.12 Required notices.
265.13 General waste analysis.
265.14 Security.
265.15 General inspection requirements.
265.16 Personnel training.
265.17 General requirements for ignitable, reactive, or incompatible wastes.
265.18 Location standards.

Subpart C—Preparedness and Prevention

265.30 Applicability.
265.31 Maintenance and operation of facility.
265.32 Required equipment.
265.33 Testing and maintenance of equipment.
265.34 Access to communications or alarm system.
265.35 Required aisle space.
265.36 [Reserved]
265.37 Arrangements with local authorities.

Subpart D—Contingency Plan and Emergency Procedures

265.50 Applicability.
265.51 Purpose and implementation of contingency plan.
265.52 Content of contingency plan.
265.53 Copies of contingency plan.
265.54 Amendment of contingency plan.
265.55 Emergency coordinator.
265.56 Emergency procedures.

Subpart E—Manifest System, Recordkeeping, and Reporting

265.70 Applicability.
265.71 Use of manifest system.
265.72 Manifest discrepancies.
265.73 Operating record.

265.74 Availability, retention, and disposition of records.
265.75 Biennial report.
265.76 Unmanifested waste report.
265.77 Additional reports.

Subpart F—Ground-Water Monitoring

265.90 Applicability.
265.91 Ground-water monitoring system.
265.92 Sampling and analysis.
265.93 Preparation, evaluation, and response.
265.94 Recordkeeping and reporting.

Subpart G—Closure and Post-Closure

265.110 Applicability.
265.111 Closure performance standard.
265.112 Closure plan; amendment of plan.
265.113 Closure; time allowed for closure.
265.114 Disposal or decontamination of equipment, structures and soils.
265.115 Certification of closure.
265.116 Survey plat.
265.117 Post-closure care and use of property.
265.118 Post-closure plan; amendment of plan.
265.119 Post-closure notices.
265.120 Certification of completion of post-closure care.

Subpart H—Financial Requirements

265.140 Applicability.
265.141 Definitions of terms as used in this subpart
265.142 Cost estimate for closure
265.143 Financial assurance for closure.
265.144 Cost estimate for post-closure care.
265.145 Financial assurance for post-closure care
265.146 Use of a mechanism for financial assurance of both closure and post-closure care.
265.147 Liability requirements.
265.148 Incapacity of owners or operators, guarantors, or financial institutions.
265.149 Use of State-required mechanisms.
265.150 State assumption of responsibility.

Subpart I—Use and Management of Containers

265.170 Applicability.
265.171 Condition of containers.
265.172 Compatibility of waste with container.
265.173 Management of containers.
265.174 Inspections.
265.175 [Reserved]
265.176 Special requirements for ignitable or reactive waste.
265.177 Special requirements for incompatible wastes

Subpart J—Tank Systems

265.190 Applicability.
265.191 Assessment of existing tank system's integrity.
265.192 Design and installation of new tank systems or components.
265.193 Containment and detection of releases.
265.194 General operating requirements.
265.195 Inspections.
265.196 Response to leaks or spills and disposition of leaking or unfit-for-use tank systems.
265.197 Closure and post-closure care.
265.198 Special requirements for ignitable or reactive wastes.
265.199 Special requirements for incompatible wastes.
265.200 Waste analysis and trial tests.
265.201 Special requirements for generators of between 100 and 1,000 kg/mo that accumulate hazardous waste in tanks.

Subpart K—Surface Impoundments

265.220 Applicability.
265.221 Design requirements.
265.222 General operating requirements.
265.223 Containment system.
265.224 [Reserved]
265.225 Waste analysis and trial tests.
265.226 Inspections.
265.227 [Reserved]
265.228 Closure and post-closure care.
265.229 Special requirements for ignitable or reactive waste.
265.230 Special requirements for incompatible wastes.

Subpart L—Waste Piles

265.250 Applicability.
265.251 Protection from wind.
265.252 Waste analysis.
265.253 Containment.
265.254 Design requirements.
265.255 [Reserved]
265.256 Special requirements for ignitable or reactive waste.
265.257 Special requirements for incompatible wastes.
265.258 Closure and post-closure care.

Subpart M—Land Treatment

265.270 Applicability.
265.271 [Reserved]
265.272 General operating requirements.
265.273 Waste analysis.
265.274—265.275 [Reserved]
265.276 Food chain crops.
265.277 [Reserved]
265.278 Unsaturated zone (zone of aeration) monitoring
265.279 Recordkeeping

265.280 Closure and post-closure.
265.281 Special requirements for ignitable or reactive waste.
265.282 Special requirements for incompatible wastes.

Subpart N—Landfills

265.300 Applicability.
265.301 Design requirements.
265.302 General operating requirements.
265.303—265.308 [Reserved]
265.309 Surveying and recordkeeping.
265.310 Closure and post-closure care.
265.311 [Reserved]
265.312 Special requirements for ignitable or reactive waste.
265.313 Special requirements for incompatible wastes.
265.314 Special requirements for bulk and containerized liquids.
265.315 Special requirements for containers.
265.316 Disposal of small containers of hazardous waste in overpacked drums (lab packs).

Subpart O—Incinerators

265.340 Applicability.
265.341 Waste analysis.
265.342—265.344 [Reserved]
265.345 General operating requirements.
265.346 [Reserved]
265.347 Monitoring and inspections.
265.348—265.350 [Reserved]
265.351 Closure.
265.352 Interim status incinerators burning particular hazardous wastes.
265.353—265.369 [Reserved]

Subpart P—Thermal Treatment

265.370 Other thermal treatment.
265.371—265.372 [Reserved]
265.373 General operating requirements.
265.374 [Reserved]
265.375 Waste analysis.
265.376 [Reserved]
265.377 Monitoring and inspections.
265.378—265.380 [Reserved]
265.381 Closure.
265.382 Open burning; waste explosives.
265.383 Interim status thermal treatment devices burning particular hazardous waste.

Subpart Q—Chemical, Physical, and Biological Treatment

265.400 Applicability.
265.401 General operating requirements.
265.402 Waste analysis and trial tests.
265.403 Inspections.
265.404 Closure.
265.405 Special requirements for ignitable or reactive waste.
265.406 Special requirements for incompatible wastes.

Subpart R—Underground Injection

265.430 Applicability.

APPENDIX I—RECORDKEEPING INSTRUCTIONS
APPENDIX II—[RESERVED]
APPENDIX III—EPA INTERIM PRIMARY DRINKING WATER STANDARDS
APPENDIX IV—TESTS FOR SIGNIFICANCE
APPENDIX V—EXAMPLES OF POTENTIALLY INCOMPATIBLE WASTE

AUTHORITY: 42 U.S.C. 6905, 6912(a), 6924, 6925, and 6935.

SOURCE: 45 FR 33232, May 19, 1980, unless otherwise noted.

EDITORIAL NOTE: The reporting or recordkeeping provisions included in the final rule published at 47 FR 32274, July 26, 1982, will be submitted for approval to the Office of Management and Budget and will not become effective until OMB approval has been obtained. EPA will publish a notice in the FEDERAL REGISTER after it obtains OMB approval.

Subpart A—General

§ 265.1 Purpose, scope, and applicability.

(a) The purpose of this part is to establish minimum national standards that define the acceptable management of hazardous waste during the period of interim status and until certification of final closure or, if the facility is subject to post-closure requirements, until post-closure responsibilities are fulfilled.

(b) The standards of this part apply to owners and operators of facilities that treat, store or dispose of hazardous waste who have fully complied with the requirements for interim status under section 3005(e) of RCRA and § 270.10 of this chapter until either a permit is issued under section 3005 of RCRA or until applicable Part 265 closure and post-closure responsibilities are fulfilled, and to those owners and operators of facilities in existence on November 19, 1980 who have failed to provide timely notification as required by section 3010(a) of RCRA and/or failed to file Part A of the permit application as required by 40 CFR 270.10 (e) and (g). These standards apply to all treatment, storage and disposal of hazardous waste at these facilities after the effective date

of these regulations, except as specifically provided otherwise in this part or Part 261 of this chapter.

[*Comment:* As stated in section 3005(a) of RCRA, after the effective date of regulations under that section (i.e., Parts 270 and 124 of this chapter), the treatment, storage and disposal of hazardous waste is prohibited except in accordance with a permit. Section 3005(e) of RCRA provides for the continued operation of an existing facility that meets certain conditions, until final administrative disposition of the owner's and operator's permit application is made.]

(c) The requirements of this part do not apply to:

(1) A person disposing of hazardous waste by means of ocean disposal subject to a permit issued under the Marine Protection, Research, and Sanctuaries Act;

[*Comment:* These Part 265 regulations do apply to the treatment or storage of hazardous waste before it is loaded onto an ocean vessel for incineration or disposal at sea, as provided in paragraph (b) of this section.]

(2) [Reserved]

(3) The owner or operator of a POTW which treats, stores, or disposes of hazardous waste;

[*Comment:* The owner or operator of a facility under paragraphs (c)(1) through (3) of this section is subject to the requirements of Part 264 of this chapter to the extent they are included in a permit by rule granted to such a person under Part 122 of this chapter, or are required by § 144.14 of this chapter.]

(4) A person who treats, stores, or disposes of hazardous waste in a State with a RCRA hazardous waste program authorized under Subpart A or B of Part 271 of this chapter, except that the requirements of this part will continue to apply:

(i) As stated in paragraph (c)(2) of this section, if the authorized State RCRA program does not cover disposal of hazardous waste by means of underground injection; or

(ii) To a person who treats, stores, or disposes of hazardous waste in a State authorized under Subpart A or B of Part 271 of this chapter if the State has not been authorized to carry out the requirements and prohibitions applicable to the treatment, storage, or disposal of hazardous waste at his facility which are imposed pursuant to the Hazardous and Solid Waste Act Amendments of 1984. The requirements and prohibitions that are applicable until a State receives authorization to carry them out include all Federal program requirements identified in § 271.1(j);

(5) The owner or operator of a facility permitted, licensed, or registered by a State to manage municipal or industrial solid waste, if the only hazardous waste the facility treats, stores, or disposes of is excluded from regulation under this part by § 261.5 of this chapter;

(6) The owner and operator of a facility managing recyclable materials described in § 261.6 (a) (2) and (3) of this chapter (except to the extent that requirements of this part are referred to in Subparts C, D, F, or G of Part 266 of this chapter).

(7) A generator accumulating waste on-site in compliance with § 262.34 of this chapter, except to the extent the requirements are included in § 262.34 of this chapter;

(8) A farmer disposing of waste pesticides from his own use in compliance with § 262.51 of this chapter; or

(9) The owner or operator of a totally enclosed treatment facility, as defined in § 260.10.

(10) The owner or operator of an elementary neutralization unit or a wastewater treatment unit as defined in § 260.10 of this chapter.

(11)(i) Except as provided in paragraph (c)(11)(ii) of this section, a person engaged in treatment or containment activities during immediate response to any of the following situations:

(A) A discharge of a hazardous waste;

(B) An imminent and substantial threat of a discharge of a hazardous waste;

(C) A discharge of a material which, when discharged, becomes a hazardous waste.

(ii) An owner or operator of a facility otherwise regulated by this part must comply with all applicable requirements of Subparts C and D.

(iii) Any person who is covered by paragraph (c)(11)(i) of this section and who continues or initiates hazardous waste treatment or containment activities after the immediate response is over is subject to all applicable requirements of this part and Parts 122 through 124 of this chapter for those activities.

(12) A transporter storing manifested shipments of hazardous waste in containers meeting the requirements of 40 CFR 262.30 at a transfer facility for a period of ten days or less.

(13) The addition of absorbent material to waste in a container (as defined in § 260.10 of this chapter) or the addition of waste to the absorbent material in a container provided that these actions occur at the time waste is first placed in the containers; and §§ 265.17(b), 265.171, and 265.172 are complied with.

(d) The following hazardous wastes must not be managed at facilities subject to regulation under this part.

(1) EPA Hazardous Waste Nos. FO20, FO21, FO22, FO23, FO26, or FO27 unless:

(i) The wastewater treatment sludge is generated in a surface impoundment as part of the plant's wastewater treatment system;

(ii) The waste is stored in tanks or containers;

(iii) The waste is stored or treated in waste piles that meet the requirements of § 264.250(c) as well as all other applicable requirements of Subpart L of this part;

(iv) The waste is burned in incinerators that are certified pursuant to the standards and procedures in § 265.352; or

(v) The waste is burned in facilities that thermally treat the waste in a device other than an incinerator and that are certified pursuant to the standards and procedures in § 265.383.

(e) The requirements of this part apply to owners or operators of all facilites which treat, store or dispose of hazardous waste referred to in Part 268.

[45 FR 33232, May 19, 1980, as amended at 45 FR 76075, Nov. 17, 1980; 45 FR 86968, Dec. 31, 1980; 46 FR 27480, May 20, 1981; 47 FR 8306, Feb. 25, 1982; 48 FR 2511, Jan. 19, 1983; 48 FR 14295, Apr. 1, 1983; 49 FR 46095, Nov. 21, 1984; 50 FR 666, Jan. 4, 1985; 50 FR 2005, Jan. 14, 1985; 50 FR 28749, July 15, 1985; 52 FR 21016, June 4, 1987; 52 FR 45798, Dec. 1, 1987]

§§ 265.2—265.3 [Reserved]

§ 265.4 Imminent hazard action.

Notwithstanding any other provisions of these regulations, enforcement actions may be brought pursuant to section 7003 of RCRA.

Subpart B—General Facility Standards

§ 265.10 Applicability

The regulations in this subpart apply to owners and operators of all hazardous waste facilities, except as § 265.1 provides otherwise.

§ 265.11 Identification number.

Every facility owner or operator must apply to EPA for an EPA identification number in accordance with the EPA notification procedures (45 FR 12746).

§ 265.12 Required notices.

(a) The owner or operator of a facility that has arranged to receive hazardous waste from a foreign source must notify the Regional Administrator in writing at least four weeks in advance of the date of the waste is expected to arrive at the facility. Notice of subsequent shipments of the same waste from the same foreign source is not required.

(b) Before transferring ownership or operation of a facility during its operating life, or of a disposal facility during the post-closure care period, the owner or operator must notify the new owner or operator in writing of the requirements of this part and Part 270 of this chapter. (Also see § 270.72 of this chapter.)

[*Comment:* An owner's or operator's failure to notify the new owner or operator of the requirements of this part in no way relieves the new owner or operator of his obligation to comply with all applicable requirements.]

(Approved by the Office of Management and Budget under control number 2050-0013)

[45 FR 33232, May 19, 1980, as amended at 48 FR 14295, Apr. 1, 1983; 50 FR 4514, Jan. 31, 1985]

§ 265.13 General waste analysis.

(a)(1) Before an owner or operator treats, stores, or disposes of any hazardous waste, he must obtain a detailed chemical and physical analysis of a representative sample of the waste. At a minimum, this analysis must contain all the information which must be known to treat, store, or dispose of the waste in accordance with the requirements of this part and Part 268 of this chapter.

(2) The analysis may include data developed under Part 261 of this chapter, and existing published or documented data on the hazardous waste or on waste generated from similar processes.

[*Comment:* For example, the facility's record of analyses performed on the waste before the effective date of these regulations, or studies conducted on hazardous waste generated from processes similar to that which generated the waste to be managed at the facility, may be included in the data base required to comply with paragraph (a)(1) of this section. The owner or operator of an off-site facility may arrange for the generator of the hazardous waste to supply part or all of the information required by paragraph (a)(1) of this section. If the generator does not supply the information, and the owner or operator chooses to accept a hazardous waste, the owner or operator is responsible for obtaining the information required to comply with this section.]

(3) The analysis must be repeated as necessary to ensure that it is accurate and up to date. At a minimum, the analysis must be repeated:

(i) When the owner or operator is notified, or has reason to believe, that the process or operation generating the hazardous waste has changed; and

(ii) For off-site facilities, when the results of the inspection required in paragraph (a)(4) of this section indicate that the hazardous waste received at the facility does not match the waste designated on the accompanying manifest or shipping paper.

(4) The owner or operator of an off-site facility must inspect and, if necessary, analyze each hazardous waste movement received at the facility to determine whether it matches the identity of the waste specified on the accompanying manifest or shipping paper.

(b) The owner or operator must develop and follow a written waste analysis plan which describes the procedures which he will carry out to comply with paragraph (a) of this section. He must keep this plan at the facility. At a minimum, the plan must specify:

(1) The parameters for which each hazardous waste will be analyzed and the rationale for the selection of these parameters (i.e., how analysis for these parameters will provide sufficient information on the waste's properties to comply with paragraph (a) of this section);

(2) The test methods which will be used to test for these parameters;

(3) The sampling method which will be used to obtain a representative sample of the waste to be analyzed. A representative sample may be obtained using either:

(i) One of the sampling methods described in Appendix I of Part 261 of this chapter; or

(ii) An equivalent sampling method.

[*Comment:* See § 260.20(c) of this chapter for related discussion.]

(4) The frequency with which the initial analysis of the waste will be reviewed or repeated to ensure that the analysis is accurate and up to date;

(5) For off-site facilities, the waste analyses that hazardous waste generators have agreed to supply; and

(6) Where applicable, the methods which will be used to meet the additional waste analysis requirements for specific waste management methods as specified in §§ 265.193, 265.225, 265.252, 265.273, 265.314, 265.341, 265.375, 265.402 and 268.7 of this chapter.

(7) For surface impoundments exempted from land disposal restrictions under § 268.4(a) of this chapter, the procedures and schedule for:

(i) The sampling of impoundment contents;

(ii) The analysis of test data; and,

(iii) The annual removal of residues which are not delisted under § 260.22 of this chapter and do not exhibit a characteristic of hazardous waste, and which do not meet the treatment standards of Part 268 Subpart D of this chapter or, where no treatment standards have been established, the annual removal of residues which do not meet the applicable prohibition levels in Part 268 Subpart C or RCRA section 3004(d).

(c) For off-site facilities, the waste analysis plan required in paragraph (b) of this section must also specify the procedures which will be used to inspect and, if necessary, analyze each movement of hazardous waste received at the facility to ensure that it matches the identity of the waste designated on the accompanying manifest or shipping paper. At a minimum, the plan must describe:

(1) The procedures which will be used to determine the identity of each movement of waste managed at the facility; and

(2) The sampling method which will be used to obtain a representative sample of the waste to be identified, if the identification method includes sampling.

(Approved by the Office of Management and Budget under control number 2050-0012)

[45 FR 33232, May 19, 1980, as amended at 50 FR 4514, Jan. 31, 1985; 50 FR 18374, Apr. 30, 1985; 51 FR 40638, Nov. 7, 1986; 52 FR 25788, July 8, 1987]

§ 265.14 Security.

(a) The owner or operator must prevent the unknowing entry, and minimize the possibility for the unauthorized entry, of persons or livestock onto the active portion of his facility, *unless:*

(1) Physical contact with the waste, structures, or equipment with the active portion of the facility will not injure unknowing or unauthorized persons or livestock which may enter the active portion of a facility, and

(2) Disturbance of the waste or equipment, by the unknowing or unauthorized entry of persons or livestock onto the active portion of a facility, will not cause a violation of the requirements of this part.

(b) Unless exempt under paragraphs (a)(1) and (2) of this section, a facility must have:

(1) A 24-hour surveillance system (e.g., television monitoring or surveillance by guards of facility personnel) which continuously monitors and controls entry onto the active portion of the facility; or

(2)(i) An artificial or natural barrier (e.g., a fence in good repair or a fence combined with a cliff), which completely surrounds the active portion of the facility; and

(ii) A means to control entry, at all times, through the gates or other entrances to the active portion of the facility (e.g., an attendant, television monitors, locked entrance, or controlled roadway access to the facility).

[*Comment:* The requirements of paragraph (b) of this section are satisfied if the facility or plant within which the active portion is located itself has a surveillance system, or a barrier and a means to control entry, which complies with the requirements of paragraph (b)(1) or (2) of this section.]

(c) Unless exempt under paragraphs (a)(1) and (a)(2) of this section, a sign with the legend, "Danger—Unauthorized Personnel Keep Out," must be posted at each entrance to the active portion of a facility, and at other locations, in sufficient numbers to be seen from any approach to this active portion. The legend must be written in English and in any other language predominant in the area surrounding the facility (e.g., facilities in counties bordering the Canadian province of Quebec must post signs in French; facilities in counties bordering Mexico must post signs in Spanish), and must be legible from a distance of at least 25 feet. Existing signs with a legend other than "Danger—Unauthorized Personnel Keep Out" may be used if the legend on the sign indicates that only authorized personnel are allowed to enter the active portion, and that entry onto the active portion can be dangerous.

[*Comment:* See § 265.117(b) for discussion of security requirements at disposal facilities during the post-closure care period.]

§ 265.15 General inspection requirements.

(a) The owner or operator must inspect his facility for malfunctions and deterioration, operator errors, and discharges which may be causing—or may lead to: (1) Release of hazardous waste constituents to the environment or (2) a threat to human health. The owner or operator must conduct these inspections often enough to identify

problems in time to correct them before they harm human health or the environment.

(b)(1) The owner or operator must develop and follow a written schedule for inspecting all monitoring equipment, safety and emergency equipment, security devices, and operating and structural equipment (such as dikes and sump pumps) that are important to preventing, detecting, or responding to environmental or human health hazards.

(2) He must keep this schedule at the facility.

(3) The schedule must identify the types of problems (e.g., malfunctions or deterioration) which are to be looked for during the inspection (e.g., inoperative sump pump, leaking fitting, eroding dike, etc.).

(4) The frequency of inspection may vary for the items on the schedule. However, it should be based on the rate of possible deterioration of the equipment and the probability of an environmental or human health incident if the deterioration, or malfunction, or any operator error goes undetected between inspections. Areas subject to spills, such as loading and unloading areas, must be inspected daily when in use. At a minimum, the inspection schedule must include the items and frequencies called for in §§ 265.174, 265.193, 265.195, 265.226, 265.347, 265.377, and 265.403.

(c) The owner or operator must remedy any deterioration or malfunction of equipment or structures which the inspection reveals on a schedule which ensures that the problem does not lead to an environmental or human health hazard. Where a hazard is imminent or has already occurred, remedial action must be taken immediately.

(d) The owner or operator must record inspections in an inspection log or summary. He must keep these records for at least three years from the date of inspection. At a minimum, these records must include the date and time of the inspection, the name of the inspector, a notation of the observations made, and the date and nature of any repairs or other remedial actions.

(Approved by the Office of Management and Budget under control number 2050-0013)

[45 FR 33232, May 19, 1980, as amended at 50 FR 4514, Jan. 31, 1985; 51 FR 25478, July 14, 1986]

§ 265.16 Personnel training.

(a)(1) Facility personnel must successfully complete a program of classroom instruction or on-the-job training that teaches them to perform their duties in a way that ensures the facility's compliance with the requirements of this part. The owner or operator must ensure that this program includes all the elements described in the document required under paragraph (d)(3) of this section.

(2) This program must be directed by a person trained in hazardous waste management procedures, and must include instruction which teaches facility personnel hazardous waste management procedures (including contingency plan implementation) relevant to the positions in which they are employed.

(3) At a minimum, the training program must be designed to ensure that facility personnel are able to respond effectively to emergencies by familiarizing them with emergency procedures, emergency equipment, and emergency systems, including where applicable:

(i) Procedures for using, inspecting, repairing, and replacing facility emergency and monitoring equipment;

(ii) Key parameters for automatic waste feed cut-off systems;

(iii) Communications or alarm systems;

(iv) Response to fires or explosions;

(v) Response to ground-water contamination incidents; and

(vi) Shutdown of operations.

(b) Facility personnel must successfuly complete the program required in paragraph (a) of this section within six months after the effective date of these regulations or six months after the date of their employment or assignment to a facility, or to a new position at a facility, whichever is later. Employees hired after the effective date of these regulations must not work in unsupervised positions until they have completed the training requirements of paragraph (a) of this section.

(c) Facility personnel must take part in an annual review of the initial training required in paragraph (a) of this section.

(d) The owner or operator must maintain the following documents and records at the facility:

(1) The job title for each position at the facility related to hazardous waste management, and the name of the employee filling each job;

(2) A written job description for each position listed under paragraph (d)(1) of this Section. This description may be consistent in its degree of specificity with descriptions for other similar positions in the same company location or bargaining unit, but must include the requisite skill, education, or other qualifications, and duties of facility personnel assigned to each position;

(3) A written description of the type and amount of both introductory and continuing training that will be given to each person filling a position listed under paragraph (d)(1) of this section;

(4) Records that document that the training or job experience required under paragraphs (a), (b), and (c) of this section has been given to, and completed by, facility personnel.

(e) Training records on current personnel must be kept until closure of the facility. Training records on former employees must be kept for at least three years from the date the employee last worked at the facility. Personnel training racords may accompany personnel transferred within the same company.

(Approved by the Office of Management and Budget under control number 2050-0013)

[45 FR 33232, May 19, 1980, as amended at 50 FR 4514, Jan. 31, 1985]

§ 265.17 General requirements for ignitable, reactive, or incompatible wastes.

(a) The owner or operator must take precautions to prevent accidental ignition or reaction of ignitable or reactive waste. This waste must be separated and protected from sources of ignition or reaction including but not limited to: Open flames, smoking, cutting and welding, hot surfaces, frictional heat, sparks (static, electrical, or mechanical), spontaneous ignition (e.g., from heat-producing chemical reactions), and radiant heat. While ignitable or reactive waste is being handled, the owner or operator must confine smoking and open flame to specially designated locations. "No Smoking" signs must be conspicuously placed wherever there is a hazard from ignitable or reactive waste.

(b) Where specifically required by other sections of this part, the treatment, storage, or disposal of ignitable or reactive waste, and the mixture or commingling of incompatible wastes, or incompatible wastes and materials, must be conducted so that it does not:

(1) Generate extreme heat or pressure, fire or explosion, or violent reaction;

(2) Produce uncontrolled toxic mists, fumes, dusts, or gases in sufficient quantities to threaten human health;

(3) Produce uncontrolled flammable fumes or gases in sufficient quantities to pose a risk of fire or explosions;

(4) Damage the structural integrity of the device or facility containing the waste; or

(5) Through other like means threaten human health or the environment.

§ 265.18 Location standards.

The placement of any hazardous waste in a salt dome, salt bed formation, underground mine or cave is prohibited, except for the Department of Energy Waste Isolation Pilot Project in New Mexico.

[50 FR 28749, July 15, 1985]

Subpart C—Preparedness and Prevention

§ 265.30 Applicability.

The regulations in this subpart apply to owners and operators of all hazardous waste facilities, except as § 265.1 provides otherwise.

§ 265.31 Maintenance and operation of facility.

Facilities must be maintained and operated to minimize the possibility of a fire, explosion, or any unplanned

sudden or non-sudden release of hazardous waste or hazardous waste constituents to air, soil, or surface water which could threaten human health or the environment.

§ 265.32 Required equipment.

All facilities must be equipped with the following, *unless* none of the hazards posed by waste handled at the facility could require a particular kind of equipment specified below:

(a) An internal communications or alarm system capable of providing immediate emergency instruction (voice or signal) to facility personnel;

(b) A device, such as a telephone (immediately available at the scene of operations) or a hand-held two-way radio, capable of summoning emergency assistance from local police departments, fire departments, or State or local emergency response teams;

(c) Portable fire extinguishers, fire control equipment (including special extinguishing equipment, such as that using foam, inert gas, or dry chemicals), spill control equipment, and decontamination equipment; and

(d) Water at adequate volume and pressure to supply water hose streams, or foam producing equipment, or automatic sprinklers, or water spray systems.

§ 265.33 Testing and maintenance of equipment.

All facility communications or alarm systems, fire protection equipment, spill control equipment, and decontamination equipment, where required, must be tested and maintained as necessary to assure its proper operation in time of emergency.

§ 265.34 Access to communications or alarm system.

(a) Whenever hazardous waste is being poured, mixed, spread, or otherwise handled, all personnel involved in the operation must have immediate access to an internal alarm or emergency communication device, either directly or through visual or voice contact with another employee, *unless* such a device is not required under § 265.32.

(b) If there is ever just one employee on the premises while the facility is operating, he must have immediate access to a device, such as a telephone (immediately available at the scene of operation) or a hand-held two-way radio, capable of summoning external emergency assistance, *unless* such a device is not required under § 265.32.

§ 265.35 Required aisle space.

The owner or operator must maintain aisle space to allow the unobstructed movement of personnel, fire protection equipment, spill control equipment, and decontamination equipment to any area of facility operation in an emergency, *unless* aisle space is not needed for any of these purposes.

§ 265.36 [Reserved]

§ 265.37 Arrangements with local authorities.

(a) The owner or operator must attempt to make the following arrangements, as appropriate for the type of waste handled at his facility and the potential need for the services of these organizations:

(1) Arrangements to familiarize police, fire departments, and emergency response teams with the layout of the facility, properties of hazardous waste handled at the facility and associated hazards, places where facility personnel would normally be working, entrances to roads inside the facility, and possible evacuation routes;

(2) Where more than one police and fire department might respond to an emergency, agreements designating primary emergency authority to a specific police and a specific fire department, and agreements with any others to provide support to the primary emergency authority;

(3) Agreements with State emergency response teams, emergency response contractors, and equipment suppliers; and

(4) Arrangements to familiarize local hospitals with the properties of hazardous waste handled at the facility and the types of injuries or illnesses which could result from fires, explosions, or releases at the facility.

(b) Where State or local authorities decline to enter into such arrangements, the owner or operator must

document the refusal in the operating record.

Subpart D—Contingency Plan and Emergency Procedures

§ 265.50 Applicability.

The regulations in this subpart apply to owners and operators of all hazardous waste facilities, except as § 265.1 provides otherwise.

§ 265.51 Purpose and implementation of contingency plan.

(a) Each owner or operator must have a contingency plan for his facility. The contingency plan must be designed to minimize hazards to human health or the environment from fires, explosions, or any unplanned sudden or non-sudden release of hazardous waste or hazardous waste constituents to air, soil, or surface water.

(b) The provisions of the plan must be carried out immediately whenever there is a fire, explosion, or release of hazardous waste or hazardous waste constituents which could threaten human health or the environment.

(Approved by the Office of Management and Budget under control number 2050-0002)

[45 FR 33232, May 19, 1980, as amended at 50 FR 4514, Jan. 31, 1985]

§ 265.52 Content of contingency plan.

(a) The contingency plan must describe the actions facility personnel must take to comply with §§ 265.51 and 265.56 in response to fires, explosions, or any unplanned sudden or non-sudden release of hazardous waste or hazardous waste constituents to air, soil, or surface water at the facility.

(b) If the owner or operator has already prepared a Spill Prevention, Control, and Countermeasures (SPCC) Plan in accordance with Part 112 of this chapter, or Part 1510 of Chapter V, or some other emergency or contingency plan, he need only amend that plan to incorporate hazardous waste management provisions that are sufficient to comply with the requirements of this part.

(c) The plan must describe arrangements agreed to by local police departments, fire departments, hospitals, contractors, and State and local emergency response teams to coordinate emergency services, pursuant to § 265.37.

(d) The plan must list names, addresses, and phone numbers (office and home) of all persons qualified to act as emergency coordinator (see § 265.55), and this list must be kept up to date. Where more than one person is listed, one must be named as primary emergency coordinator and others must be listed in the order in which they will assume responsibility as alternates.

(e) The plan must include a list of all emergency equipment at the facility (such as fire extinguishing systems, spill control equipment, communications and alarm systems (internal and external), and decontamination equipment), where this equipment is required. This list must be kept up to date. In addition, the plan must include the location and a physical description of each item on the list, and a brief outline of its capabilities.

(f) The plan must include an evacuation plan for facility personnel where there is a possibility that evacuation could be necessary. This plan must describe signal(s) to be used to begin evacuation, evacuation routes, and alternate evacuation routes (in cases where the primary routes could be blocked by releases of hazardous waste or fires).

(Approved by the Office of Management and Budget under control number 2050-0002)

[45 FR 33232, May 19, 1980, as amended at 46 FR 27480, May 20, 1981; 50 FR 4514, Jan. 31, 1985]

§ 265.53 Copies of contingency plan.

A copy of the contingency plan and all revisions to the plan must be:

(a) Maintained at the facility; and

(b) Submitted to all local police departments, fire departments, hospitals, and State and local emergency response teams that may be called upon to provide emergency services.

(Approved by the Office of Management and Budget under control number 2050-0002)

[45 FR 33232, May 19, 1980, as amended at 50 FR 4514, Jan. 31, 1985]

§ 265.54 Amendment of contingency plan.

The contingency plan must be reviewed, and immediately amended, if necessary, whenever:

(a) Applicable regulations are revised;

(b) The plan fails in an emergency;

(c) The facility changes—in its design, construction, operation, maintenance, or other circumstances—in a way that materially increases the potential for fires, explosions, or releases of hazardous waste or hazardous waste constituents, or changes the response necessary in an emergency;

(d) The list of emergency coordinators changes; or

(e) The list of emergency equipment changes.

(Approved by the Office of Management and Budget under control number 2050-0002)

[45 FR 33232, May 19, 1980, as amended at 50 FR 4514, Jan. 31, 1985]

§ 265.55 Emergency coordinator.

At all times, there must be at least one employee either on the facility premises or on call (i.e., available to respond to an emergency by reaching the facility within a short period of time) with the responsibility for coordinating all emergency response measures. This emergency coordinator must be thoroughly familiar with all aspects of the facility's contingency plan, all operations and activities at the facility, the location and characteristics of waste handled, the location of all records within the facility, and the facility layout. In addition, this person must have the authority to commit the resources needed to carry out the contingency plan.

[*Comment:* The emergency coordinator's responsibilities are more fully spelled out in § 265.56. Applicable responsibilities for the emergency coordinator vary, depending on factors such as type and variety of waste(s) handled by the facility, and type and complexity of the facility.]

§ 265.56 Emergency procedures.

(a) Whenever there is an imminent or actual emergency situation, the emergency coordinator (or his designee when the emergency coordinator is on call) must immediately:

(1) Activate internal facility alarms or communication systems, where applicable, to notify all facility personnel; and

(2) Notify appropriate State or local agencies with designated response roles if their help is needed.

(b) Whenever there is a release, fire, or explosion, the emergency coordinator must immediately identify the character, exact source, amount, and a real extent of any released materials. He may do this by observation or review of facility records or manifests and, if necessary, by chemical analysis.

(c) Concurrently, the emergency coordinator must assess possible hazards to human health or the environment that may result from the release, fire, or explosion. This assessment must consider both direct and indirect effects of the release, fire, or explosion (e.g., the effects of any toxic, irritating, or asphyxiating gases that are generated, or the effects of any hazardous surface water run-offs from water or chemical agents used to control fire and heat-induced explosions).

(d) If the emergency coordinator determines that the facility has had a release, fire, or explosion which could threaten human health, or the environment, outside the facility, he must report his findings as follows:

(1) If his assessment indicates that evacuation of local areas may be advisable, he must immediately notify appropriate local authorities. He must be available to help appropriate officials decide whether local areas should be evacuated; and

(2) He must immediately notify either the government official designated as the on-scene coordinator for that geographical area (in the applicable regional contingency plan under Part 1510 of this title), or the National Response Center (using their 24-hour toll free number 800/424-8802). The report must include:

(i) Name and telephone number of reporter;

(ii) Name and address of facility;

(iii) Time and type of incident (e.g., release, fire);

(iv) Name and quantity of material(s) involved, to the extent known.

(v) The extent of injuries, if any; and

(vi) The possible hazards to human health, or the environment, outside the facility.

(e) During an emergency, the emergency coordinator must take all reasonable measures necessary to ensure that fires, explosions, and releases do not occur, recur, or spread to other hazardous waste at the facility. These measures must include, where applicable, stopping processes and operations, collecting and containing released waste, and removing or isolating containers.

(f) If the facility stops operations in response to a fire, explosion or release, the emergency coordinator must monitor for leaks, pressure buildup, gas generation, or ruptures in valves, pipes, or other equipment, wherever this is appropriate.

(g) Immediately after an emergency, the emergency coordinator must provide for treating, storing, or disposing of recovered waste, contaminated soil or surface water, or any other material that results from a release, fire, or explosion at the facility.

[*Comment:* Unless the owner or operator can demonstrate, in accordance with § 261.3(c) or (d) of this chapter, that the recovered material is not a hazardous waste, the owner or operator becomes a generator of hazardous waste and must manage it in accordance with all applicable requirements of Parts 262, 263, and 265 of this chapter.]

(h) The emergency coordinator must ensure that, in the affected area(s) of the facility:

(1) No waste that may be incompatible with the released material is treated, stored, or disposed of until cleanup procedures are completed; and

(2) All emergency equipment listed in the contingency plan is cleaned and fit for its intended use before operations are resumed.

(i) The owner or operator must notify the Regional Administrator, and appropriate State and local authorities, that the facility is in compliance with paragraph (h) of this section before operations are resumed in the affected area(s) of the facility.

(j) The owner or operator must note in the operating record the time, date, and details of any incident that requires implementing the contingency plan. Within 15 days after the incident, he must submit a written report on the incident to the Regional Administrator. The report must include:

(1) Name, address, and telephone number of the owner or operator;

(2) Name, address, and telephone number of the facility;

(3) Date, time, and type of incident (e.g., fire, explosion);

(4) Name and quantity of material(s) involved;

(5) The extent of injuries, if any;

(6) An assessment of actual or potential hazards to human health or the environment, where this is applicable; and

(7) Estimated quantity and disposition of recovered material that resulted from the incident.

(Approved by the Office of Management and Budget under control number 2050-0002)

[45 FR 33232, May 19, 1980, as amended at 50 FR 4514, Jan. 31, 1985]

Subpart E—Manifest System, Recordkeeping, and Reporting

§ 265.70 Applicability.

The regulations in this subpart apply to owners and operators of both on-site and off-site facilities, except as § 265.1 provides otherwise. Sections 265.71, 265.72, and 265.76 do not apply to owners and operators of on-site facilities that do not receive any hazardous waste from off-site sources.

§ 265.71 Use of manifest system.

(a) If a facility receives hazardous waste accompanied by a manifest, the owner or operator, or his agent, must:

(1) Sign and date each copy of the manifest to certify that the hazardous waste covered by the manifest was received;

(2) Note any significant discrepancies in the manifest (as defined in § 265.72(a)) on each copy of the manifest;

[*Comment:* The Agency does not intend that the owner or operator of a facility whose procedures under § 265.13(c) include waste analysis must perform that analysis before signing the manifest and giving it to the transporter. Section 265.72(b), however,

requires reporting an unreconciled discrepancy discovered during later analysis.]

(3) Immediately give the transporter at least one copy of the signed manifest;

(4) Within 30 days after the delivery, send a copy of the manifest to the generator; and

(5) Retain at the facility a copy of each manifest for at least three years from the date of delivery.

(b) If a facility receives, from a rail or water (bulk shipment) transporter, hazardous waste which is accompanied by a shipping paper containing all the information required on the manifest (excluding the EPA identification numbers, generator's certification, and signatures), the owner or operator, or his agent, must:

(1) Sign and date each copy of the manifest or shipping paper (if the manifest has not been received) to certify that the hazardous waste covered by the manifest or shipping paper was received;

(2) Note any significant discrepancies (as defined in § 265.72(a)) in the manifest or shipping paper (if the manifest has not been received) on each copy of the manifest or shipping paper;

[*Comment:* The Agency does not intend that the owner or operator of a facility whose procedures under § 265.13(c) include waste analysis must perform that analysis before signing the shipping paper and giving it to the transporter. Section 265.72(b), however, requires reporting an unreconciled discrepancy discovered during later analysis.]

(3) Immediately give the rail or water (bulk shipment) transporter at least one copy of the manifest or shipping paper (if the manifest has not been received);

(4) Within 30 days after the delivery, send a copy of the signed and dated manifest to the generator; however, if the manifest has not been received within 30 days after delivery, the owner or operator, or his agent, must send a copy of the shipping paper signed and dated to the generator; and

[*Comment:* Section 262.23(c) of this chapter requires the generator to send three copies of the manifest to the facility when hazardous waste is sent by rail or water (bulk shipment).]

(5) Retain at the facility a copy of the manifest and shipping paper (if signed in lieu of the manifest at the time of delivery) for at least three years from the date of delivery.

(c) Whenever a shipment of hazardous waste is initiated from a facility, the owner or operator of that facility must comply with the requirements of Part 262 of this chapter.

[*Comment:* The provisions of § 262.34 are applicable to the on-site accumulation of hazardous wastes by generators. Therefore, the provisions of § 262.34 only apply to owners or operators who are shipping hazardous waste which they generated at that facility.]

(Approved by the Office of Management and Budget under control number 2050-0039)

[45 FR 33232, May 19, 1980, as amended at 45 FR 86970, 86974, Dec. 31, 1980; 50 FR 4514, Jan. 31, 1985]

§ 265.72 Manifest discrepancies.

(a) Manifest discrepancies are differences between the quantity or type of hazardous waste designated on the manifest or shipping paper, and the quantity or type of hazardous waste a facility actually receives. Significant discrepancies in quantity are: (1) For bulk waste, variations greater than 10 percent in weight, and (2) for batch waste, any variation in piece count, such as a discrepancy of one drum in a truckload. Significant discrepancies in type are obvious differences which can be discovered by inspection or waste analysis, such as waste solvent substituted for waste acid, or toxic constituents not reported on the manifest or shipping paper.

(b) Upon discovering a significant discrepancy, the owner or operator must attempt to reconcile the discrepancy with the waste generator or transporter (e.g., with telephone conversations). If the discrepancy is not resolved within 15 days after receiving the waste, the owner or operator must immediately submit to the Regional Administrator a letter describing the discrepancy and attempts to reconcile it, and a copy of the manifest or shipping paper at issue.

(Approved by the Office of Management and Budget under control number 2050-0039)

[45 FR 33232, May 19, 1980, as amended at 50 FR 4514, Jan. 31, 1985]

§ 265.73 Operating record.

(a) The owner or operator must keep a written operating record at his facility.

(b) The following information must be recorded, as it becomes available, and maintained in the operating record until closure of the facility:

(1) A description and the quantity of each hazardous waste received, and the method(s) and date(s) of its treatment, storage, or disposal at the facility as required by Appendix I;

(2) The location of each hazardous waste within the facility and the quantity at each location. For disposal facilities, the location and quantity of each hazardous waste must be recorded on a map or diagram of each cell or disposal area. For all facilities, this information must include cross-references to specific manifest document numbers, if the waste was accompanied by a manifest;

[*Comment:* See §§ 265.119, 265.279, and 265.309 for related requirements.]

(3) Records and results of waste analysis and trial tests performed as specified in §§ 265.13, 265.193, 265.225, 265.252, 265.273, 265.314, 265.341, 265.375, 265.402, 268.4(a) and 268.7 of this chapter.

(4) Summary reports and details of all incidents that require implementing the contingency plan as specified in § 265.56(j);

(5) Records and results of inspections as required by § 265.15(d) (except these data need be kept only three years);

(6) Monitoring, testing, or analytical data when required by §§ 265.90, 265.94, 265.191, 265.193, 265.195, 265.276, 265.278, 265.280(d)(1), 265.347, and 265.377; and

[*Comment:* As required by § 265.94, monitoring data at disposal facilities must be kept throughout the post-closure period.]

(7) All closure cost estimates under § 265.142 and, for disposal facilities, all post-closure cost estimates under § 265.144.

(8) Records of the quantities (and date of placement) for each shipment of hazardous waste placed in land disposal units under an extension to the effective date of any land disposal restriction granted pursuant to § 268.5, or a petition pursuant to § 268.6 and the notice required by a generator under § 268.7(a)(3).

(9) For an off-site treatment facility, the notice required by a generator under § 268.7(a)(1);

(10) For an on-site treatment facility the information contained in the notice required by a generator under § 268.7(a)(1), except for the manifest number.

(11) For an off-site land disposal facility, the notice and certification required by the owner or operator of a treatment facility under § 268.7(b) or the certification required by the generator under § 268.7(a)(2), whichever is applicable;

(12) For an on-site land disposal facility, the information contained in the notice required by a generator under § 268.7(a)(2), except for the manifest number, or the information contained in the notice required by the treatment facility under § 268.7(b)(2), except for the manifest number, whichever is applicable.

(Approved by Office of Management and Budget under control numbers 2050-0012, and 2050-0013)

[45 FR 33232, May 19, 1980, as amended at 46 FR 7680, Jan. 23, 1981; 50 FR 4514, Jan. 31, 1985; 50 FR 18374, Apr. 30, 1985; 51 FR 25479, July 14, 1986; 51 FR 40638, Nov. 7, 1986]

§ 265.74 Availability, retention, and disposition of records.

(a) All records, including plans, required under this part must be furnished upon request, and made available at all reasonable times for inspection, by any officer, employee, or representative of EPA who is duly designated by the Administrator.

(b) The retention period for all records required under this part is extended automatically during the course of any unresolved enforcement action regarding the facility or as requested by the Administrator.

(c) A copy of records of waste disposal locations and quantities under

§ 265.73(b)(2) must be submitted to the Regional Administrator and local land authority upon closure of the facility (see § 265.119).

(Approved by the Office of Management and Budget under control number 2050-0013)

[45 FR 33232, May 19, 1980, as amended at 50 FR 4514, Jan. 31, 1985]

§ 265.75 Biennial report.

The owner or operator must prepare and submit a single copy of a biennial report to the Regional Administrator by March 1 of each even numbered year. The biennial report must be submitted on EPA Form 8700-13B. The report must cover facility activities during the previous calendar year and must include the following information:

(a) The EPA identification number, name, and address of the facility;

(b) The calendar year covered by the report;

(c) For off-site facilities, the EPA identification number of each hazardous waste generator from which the facility received a hazardous waste during the year; for imported shipments, the report must give the name and address of the foreign generator;

(d) A description and the quantity of each hazardous waste the facility received during the year. For off-site facilities, this information must be listed by EPA identification number of each generator;

(e) The method of treatment, storage, or disposal for each hazardous waste;

(f) Monitoring data under § 265.94(a)(2)(ii) and (iii), and (b)(2), where required;

(g) The most recent closure cost estimate under § 265.142, and, for disposal facilities, the most recent post-closure cost estimate under § 265.144; and

(h) For generators who treat, store, or dispose of hazardous waste on-site, a description of the efforts undertaken during the year to reduce the volume and toxicity of waste generated.

(i) For generators who treat, store, or dispose of hazardous waste on-site, a description of the changes in volume and toxicity of waste actually achieved during the year in comparison to previous years to the extent such information is available for the years prior to 1984.

(j) The certification signed by the owner or operator of the facility or his authorized representative.

(Approved by the Office of Management and Budget under control number 2050-0024)

[45 FR 33232, May 19, 1980, as amended at 48 FR 3982, Jan. 28, 1983; 50 FR 4514, Jan. 31, 1985; 51 FR 28556, Aug. 8, 1986]

§ 265.76 Unmanifested waste report.

If a facility accepts for treatment, storage, or disposal any hazardous waste from an off-site source without an accompanying manifest, or without an accompanying shipping paper as described in § 263.20(e)(2) of this chapter, and if the waste is not excluded from the manifest requirement by § 261.5 of this chapter, then the owner or operator must prepare and submit a single copy of a report to the Regional Administrator within fifteen days after receiving the waste. The unmanifested waste report must be submitted on EPA form 8700-13B. Such report must be designated 'Unmanifested Waste Report' and include the following information:

(a) The EPA identification number, name, and address of the facility;

(b) The date the facility received the waste;

(c) The EPA identification number, name, and address of the generator and the transporter, if available;

(d) A description and the quantity of each unmanifested hazardous waste the facility received;

(e) The method of treatment, storage, or disposal for each hazardous waste;

(f) The certification signed by the owner or operator of the facility or his authorized representative; and

(g) A brief explanation of why the waste was unmanifested, if known.

[*Comment:* Small quantities of hazardous waste are excluded from regulation under this part and do not require a manifest. Where a facility receives unmanifested hazardous wastes, the Agency suggests that the owner or operator obtain from each generator a certification that the waste qualifies for exclusion. Otherwise, the Agency suggests that the owner or operator file an unmanifested waste report for the hazardous waste movement.]

(Approved by the Office of Management and Budget under control number 2050-0013)

[45 FR 33232, May 19, 1980, as amended at 48 FR 3982, Jan. 28, 1983; 50 FR 4514, Jan. 31, 1985]

§ 265.77 Additional reports.

In addition to submitting the biennial report and unmanifested waste reports described in §§ 265.75 and 265.76, the owner or operator must also report to the Regional Administrator:

(a) Releases, fires, and explosions as specified in § 265.56(j);

(b) Ground-water contamination and monitoring data as specified in §§ 265.93 and 265.94; and

(c) Facility closure as specified in § 265.115.

[45 FR 33232, May 19, 1980, as amended at 48 FR 3982, Jan. 28, 1983]

Subpart F—Ground-Water Monitoring

§ 265.90 Applicability.

(a) Within one year after the effective date of these regulations, the owner or operator of a surface impoundment, landfill, or land treatment facility which is used to manage hazardous waste must implement a ground-water monitoring program capable of determining the facility's impact on the quality of ground water in the uppermost aquifer underlying the facility, except as § 265.1 and paragraph (c) of this section provide otherwise.

(b) Except as paragraphs (c) and (d) of this section provide otherwise, the owner or operator must install, operate, and maintain a ground-water monitoring system which meets the requirements of § 265.91, and must comply with §§ 265.92 through 265.94. This ground-water monitoring program must be carried out during the active life of the facility, and for disposal facilities, during the post-closure care period as well.

(c) All or part of the ground-water monitoring requirements of this subpart may be waived if the owner or operator can demonstrate that there is a low potential for migration of hazardous waste or hazardous waste constituents from the facility via the uppermost aquifer to water supply wells (domestic, industrial, or agricultural) or to surface water. This demonstration must be in writing, and must be kept at the facility. This demonstration must be certified by a qualified geologist or geotechnical engineer and must establish the following:

(1) The potential for migration of hazardous waste or hazardous waste constituents from the facility to the uppermost aquifer, by an evaluation of:

(i) A water balance of precipitation, evapotranspiration, runoff, and infiltration; and

(ii) Unsaturated zone characteristics (i.e., geologic materials, physical properties, and depth to ground water); and

(2) The potential for hazardous waste or hazardous waste constituents which enter the uppermost aquifer to migrate to a water supply well or surface water, by an evaluation of:

(i) Saturated zone characteristics (i.e., geologic materials, physical properties, and rate of ground-water flow); and

(ii) The proximity of the facility to water supply wells or surface water.

(d) If an owner or operator assumes (or knows) that ground-water monitoring of indicator parameters in accordance with §§ 265.91 and 265.92 would show statistically significant increases (or decreases in the case of pH) when evaluated under § 265.93(b), he may, install, operate, and maintain an alternate ground-water monitoring system (other than the one described in §§ 265.91 and 265.92). If the owner or operator decides to use an alternate ground-water monitoring system he must:

(1) Within one year after the effective date of these regulations, submit to the Regional Administrator a specific plan, certified by a qualified geologist or geotechnical engineer, which satisfies the requirements of § 265.93(d)(3), for an alternate ground-water monitoring system;

(2) Not later than one year after the effective date of these regulations, initiate the determinations specified in § 265.93(d)(4);

(3) Prepare and submit a written report in accordance with § 265.93(d)(5);

(4) Continue to make the determinations specified in § 265.93(d)(4) on a quarterly basis until final closure of the facility; and

(5) Comply with the recordkeeping and reporting requirements in § 265.94(b).

(e) The ground-water monitoring requirements of this subpart may be waived with respect to any surface impoundment that (1) Is used to neutralize wastes which are hazardous solely because they exhibit the corrosivity characteristic under § 261.22 of this chapter or are listed as hazardous wastes in Subpart D of Part 261 of this chapter only for this reason, and (2) contains no other hazardous wastes, if the owner or operator can demonstrate that there is no potential for migration of hazardous wastes from the impoundment. The demonstration must establish, based upon consideration of the characteristics of the wastes and the impoundment, that the corrosive wastes will be neutralized to the extent that they no longer meet the corrosivity characteristic before they can migrate out of the impoundment. The demonstration must be in writing and must be certified by a qualified professional.

(Approved by the Office of Management and Budget under control number 2050-0033)

[45 FR 33232, May 19, 1980, as amended at 47 FR 1255, Jan. 11, 1982; 50 FR 4514, Jan. 31, 1985]

§ 265.91 Ground-water monitoring system.

(a) A ground-water monitoring system must be capable of yielding ground-water samples for analysis and must consist of:

(1) Monitoring wells (at least one) installed hydraulically upgradient (i.e., in the direction of increasing static head) from the limit of the waste management area. Their number, locations, and depths must be sufficient to yield ground-water samples that are:

(i) Representative of background ground-water quality in the uppermost aquifer near the facility; and

(ii) Not affected by the facility; and

(2) Monitoring wells (at least three) installed hydraulically downgradient (i.e., in the direction of decreasing static head) at the limit of the waste management area. Their number, locations, and depths must ensure that they immediately detect any statistically significant amounts of hazardous waste or hazardous waste constituents that migrate from the waste management area to the uppermost aquifer.

(b) Separate monitoring systems for each waste management component of a facility are not required provided that provisions for sampling upgradient and downgradient water quality will detect any discharge from the waste management area.

(1) In the case of a facility consisting of only one surface impoundment, landfill, or land treatment area, the waste management area is described by the waste boundary (perimeter).

(2) In the case of a facility consisting of more than one surface impoundment, landfill, or land treatment area, the waste management area is described by an imaginary boundary line which circumscribes the several waste management components.

(c) All monitoring wells must be cased in a manner that maintains the integrity of the monitoring well bore hole. This casing must be screened or perforated, and packed with gravel or sand where necessary, to enable sample collection at depths where appropriate aquifer flow zones exist. The annular space (i.e., the space between the bore hole and well casing) above the sampling depth must be sealed with a suitable material (e.g., cement grout or bentonite slurry) to prevent contamination of samples and the ground water.

(Approved by the Office of Management and Budget under control number 2050-0033)

[45 FR 33232, May 19, 1980, as amended at 50 FR 4514, Jan. 31, 1985]

§ 265.92 Sampling and analysis.

(a) The owner or operator must obtain and analyze samples from the installed ground-water monitoring system. The owner or operator must develop and follow a ground-water sampling and analysis plan. He must

keep this plan at the facility. The plan must include procedures and techniques for:

(1) Sample collection;

(2) Sample preservation and shipment;

(3) Analytical procedures; and

(4) Chain of custody control.

[*Comment:* See "Procedures Manual For Ground-water Monitoring At Solid Waste Disposal Facilities," EPA-530/SW-611, August 1977 and "Methods for Chemical Analysis of Water and Wastes," EPA-600/4-79-020, March 1979 for discussions of sampling and analysis procedures.]

(b) The owner or operator must determine the concentration or value of the following parameters in ground-water samples in accordance with paragraphs (c) and (d) of this section:

(1) Parameters characterizing the suitability of the ground water as a drinking water supply, as specified in Appendix III.

(2) Parameters establishing ground-water quality:

(i) Chloride
(ii) Iron
(iii) Manganese
(iv) Phenols
(v) Sodium
(vi) Sulfate

[*Comment:* These parameters are to be used as a basis for comparison in the event a ground-water quality assessment is required under § 265.93(d).]

(3) Parameters used as indicators of ground-water contamination:

(i) pH
(ii) Specific Conductance
(iii) Total Organic Carbon
(iv) Total Organic Halogen

(c)(1) For all monitoring wells, the owner or operator must establish initial background concentrations or values of all parameters specified in paragraph (b) of this section. He must do this quarterly for one year.

(2) For each of the indicator parameters specified in paragraph (b)(3) of this section, at least four replicate measurements must be obtained for each sample and the initial background arithmetic mean and variance must be determined by pooling the replicate measurements for the respective parameter concentrations or values in samples obtained from upgradient wells during the first year.

(d) After the first year, all monitoring wells must be sampled and the samples analyzed with the following frequencies:

(1) Samples collected to establish ground-water quality must be obtained and analyzed for the parameters specified in paragraph (b)(2) of this section at least annually.

(2) Samples collected to indicate ground-water contamination must be obtained and analyzed for the parameters specified in paragraph (b)(3) of this section at least semi-annually.

(e) Elevation of the ground-water surface at each monitoring well must be determined each time a sample is obtained.

(Approved by the Office of Management and Budget under control number 2050-0033)

[45 FR 33232, May 19, 1980, as amended at 50 FR 4514, Jan. 31, 1985]

§ 265.93 Preparation, evaluation, and response.

(a) Within one year after the effective date of these regulations, the owner or operator must prepare an *outline* of a ground-water quality assessment program. The outline must describe a more comprehensive ground-water monitoring program (than that described in §§ 265.91 and 265.92) capable of determining:

(1) Whether hazardous waste or hazardous waste constituents have entered the ground water;

(2) The rate and extent of migration of hazardous waste or hazardous waste constituents in the ground water; and

(3) The concentrations of hazardous waste or hazardous waste constituents in the ground water.

(b) For each indicator parameter specified in § 265.92(b)(3), the owner or operator must calculate the arithmetic mean and variance, based on at least four replicate measurements on each sample, for each well monitored in accordance with § 265.92(d)(2), and compare these results with its initial background arithmetic mean. The comparison must consider individually each of the wells in the monitoring system, and must use the Student's t-test at the 0.01 level of significance (see Appendix IV) to determine statis-

tically significant increases (and decreases, in the case of pH) over initial background.

(c)(1) If the comparisons for the *upgradient* wells made under paragraph (b) of this section show a significant increase (or pH decrease), the owner or operator must submit this information in accordance with § 265.94(a)(2)(ii).

(2) If the comparisons for *downgradient* wells made under paragraph (b) of this section show a significant increase (or pH decrease), the owner or operator must then immediately obtain additional ground-water samples from those downgradient wells where a significant difference was detected, split the samples in two, and obtain analyses of all additional samples to determine whether the significant difference was a result of laboratory error.

(d)(1) If the analyses performed under paragraph (c)(2) of this section confirm the significant increase (or pH decrease), the owner or operator must provide written notice to the Regional Administrator—within seven days of the date of such confirmation—that the facility may be affecting ground-water quality.

(2) Within 15 days after the notification under paragraph (d)(1) of this section, the owner or operator must develop and submit to the Regional Administrator a specific plan, based on the outline required under paragraph (a) of this section and certified by a qualified geologist or geotechnical engineer, for a ground-water quality assessment program at the facility.

(3) The plan to be submitted under § 265.90(d)(1) or paragraph (d)(2) of this section must specify:

(i) The number, location, and depth of wells;

(ii) Sampling and analytical methods for those hazardous wastes or hazardous waste constituents in the facility;

(iii) Evaluation procedures, including any use of previously-gathered ground-water quality information; and

(iv) A schedule of implementation.

(4) The owner or operator must implement the ground-water quality assessment plan which satisfies the requirements of paragraph (d)(3) of this section, and, at a minimum, determine:

(i) The rate and extent of migration of the hazardous waste or hazardous waste constituents in the ground water; and

(ii) The concentrations of the hazardous waste or hazardous waste constituents in the ground water.

(5) The owner or operator must make his first determination under paragraph (d)(4) of this section as soon as technically feasible, and, within 15 days after that determination, submit to the Regional Administrator a written report containing an assessment of the ground-water quality.

(6) If the owner or operator determines, based on the results of the first determination under paragraph (d)(4) of this section, that no hazardous waste or hazardous waste constituents from the facility have entered the ground water, then he may reinstate the indicator evaluation program described in § 265.92 and paragraph (b) of this section. If the owner or operator reinstates the indicator evaluation program, he must so notify the Regional Administrator in the report submitted under paragraph (d)(5) of this section.

(7) If the owner or operator determines, based on the first determination under paragraph (d)(4) of this section, that hazardous waste or hazardous waste constituents from the facility have entered the ground water, then he:

(i) Must continue to make the determinations required under paragraph (d)(4) of this section on a quarterly basis until final closure of the facility, if the ground-water quality assessment plan was implemented prior to final closure of the facility; or

(ii) May cease to make the determinations required under paragraph (d)(4) of this section, if the ground-water quality assessment plan was implemented during the post-closure care period.

(e) Notwithstanding any other provision of this subpart, any ground-water quality assessment to satisfy the requirements of § 265.93(d)(4) which is initiated prior to final closure of the facility must be completed and reported in accordance with § 265.93(d)(5).

(f) Unless the ground water is monitored to satisfy the requirements of § 265.93(d)(4), at least annually the owner or operator must evaluate the data on ground-water surface elevations obtained under § 265.92(e) to determine whether the requirements under § 265.91(a) for locating the monitoring wells continues to be satisfied. If the evaluation shows that § 265.91(a) is no longer satisfied, the owner or operator must immediately modify the number, location, or depth of the monitoring wells to bring the ground-water monitoring system into compliance with this requirement.

(Approved by the Office of Management and Budget under control number 2050-0033)

[45 FR 33232, May 19, 1980, as amended at 50 FR 4514, Jan. 31, 1985]

§ 265.94 Recordkeeping and reporting.

(a) Unless the ground water is monitored to satisfy the requirements of § 265.93(d)(4), the owner or operator must:

(1) Keep records of the analyses required in § 265.92(c) and (d), the associated ground-water surface elevations required in § 265.92(e), and the evaluations required in § 265.93(b) throughout the active life of the facility, and, for disposal facilities, throughout the post-closure care period as well; and

(2) Report the following ground-water monitoring information to the Regional Administrator:

(i) During the first year when initial background concentrations are being established for the facility: concentrations or values of the parameters listed in § 265.92(b)(1) for each ground-water monitoring well within 15 days after completing each quarterly analysis. The owner or operator must separately identify for each monitoring well any parameters whose concentration or value has been found to exceed the maximum contaminant levels listed in Appendix III.

(ii) Annually: Concentrations or values of the parameters listed in § 265.92(b)(3) for each ground-water monitoring well, along with the required evaluations for these parameters under § 265.93(b). The owner or operator must separately identify any significant differences from initial background found in the upgradient wells, in accordance with § 265.93(c)(1). During the active life of the facility, this information must be submitted no later than March 1 following each calendar year.

(iii) No later than March 1 following each calendar year: Results of the evaluations of ground-water surface elevations under § 265.93(f), and a description of the response to that evaluation, where applicable.

(b) If the ground water is monitored to satisfy the requirements of § 265.93(d)(4), the owner or operator must:

(1) Keep records of the analyses and evaluations specified in the plan, which satisfies the requirements of § 265.93(d)(3), throughout the active life of the facility, and, for disposal facilities, throughout the post-closure care period as well; and

(2) Annually, until final closure of the facility, submit to the Regional Administrator a report containing the results of his or her ground-water quality assessment program which includes, but is not limited to, the calculated (or measured) rate of migration of hazardous waste or hazardous waste constituents in the ground water during the reporting period. This information must be submitted no later than March 1 following each calendar year.

(Approved by the Office of Management and Budget under control number 2050-0033)

[45 FR 33232, May 19, 1980, as amended at 48 FR 3982, Jan. 28, 1983; 50 FR 4514, Jan. 31, 1985]

Subpart G—Closure and Post-Closure

SOURCE: 51 FR 16451, May 2, 1986, unless otherwise noted.

§ 265.110 Applicability.

Except as § 265.1 provides otherwise:

(a) Sections 265.111 through 265.115 (which concern closure) apply to the owners and operators of all hazardous waste management facilities; and

(b) Sections 265.116 through 265.120 (which concern post-closure care) apply to the owners and operators of:

(1) All hazardous waste disposal facilities; and

(2) Tank systems that are required under § 265.197 to meet requirements for landfills.

[51 FR 16451, May 2, 1986, as amended at 51 FR 25479, July 14, 1986]

§ 265.111 Closure performance standard.

The owner or operator must close the facility in a manner that:

(a) Minimizes the need for further maintenance, and

(b) Controls, minimizes or eliminates, to the extent necessary to protect human health and the environment, post-closure escape of hazardous waste, hazardous constituents, leachate, contaminated run-off, or hazardous waste decomposition products to the ground or surface waters or to the atmosphere, and

(c) Complies with the closure requirements of this subpart including, but not limited to, the requirements of §§ 265.197, 265.228, 265.258, 265.280, 265.310, 265.351, 265.381 and 265.404.

§ 265.112 Closure plan; amendment of plan.

(a) *Written plan.* By May 19, 1981, the owner or operator of a hazardous waste management facility must have a written closure plan. Until final closure is completed and certified in accordance with § 265.115, a copy of the most current plan must be furnished to the Regional Administrator upon request, including request by mail. In addition, for facilities without approved plans, it must also be provided during site inspections, on the day of inspection, to any officer, employee or representative of the Agency who is duly designated by the Administrator.

(b) *Content of plan.* The plan must identify steps necessary to perform partial and/or final closure of the facility at any point during its active life. The closure plan must include, at least:

(1) A description of how each hazardous waste management unit at the facility will be closed in accordance with § 265.111; and

(2) A description of how final closure of the facility will be conducted in accordance with § 265.111. The description must identify the maximum extent of the operation which will be unclosed during the active life of the facility; and

(3) An estimate of the maximum inventory of hazardous wastes ever on-site over the active life of the facility and a detailed description of the methods to be used during partial and final closure, including, but not limited to methods for removing, transporting, treating, storing or disposing of all hazardous waste, identification of and the type(s) of off-site hazardous waste management unit(s) to be used, if applicable; and

(4) A detailed description of the steps needed to remove or decontaminate all hazardous waste residues and contaminated containment system components, equipment, structures, and soils during partial and final closure including, but not limited to, procedures for cleaning equipment and removing contaminated soils, methods for sampling and testing surrounding soils, and criteria for determining the extent of decontamination necessary to satisfy the closure performance standard; and

(5) A detailed description of other activities necessary during the partial and final closure period to ensure that all partial closures and final closure satisfy the closure performance standards, including, but not limited to, ground-water monitoring, leachate collection, and run-on and run-off control; and

(6) A schedule for closure of each hazardous waste management unit and for final closure of the facility. The schedule must include, at a minimum, the total time required to close each hazardous waste management unit and the time required for intervening closure activities which will allow tracking of the progress of partial and final closure. (For example, in the case of a landfill unit, estimates of the time required to treat or dispose of all hazardous waste inventory and of the time required to place a final cover must be included.); and

(7) An estimate of the expected year of final closure for facilities that use trust funds to demonstrate financial assurance under § 26[illegible] or § 265.145 and whose remaining operating life is less than twenty years, and for facilities without approved closure plans.

(c) *Amendment of plan.* The owner or operator may amend the closure plan at any time prior to the notification of partial or final closure of the facility. An owner or operator with an approved closure plan must submit a written request to the Regional Administrator to authorize a change to the approved closure plan. The written request must include a copy of the amended closure plan for approval by the Regional Administrator.

(1) The owner or operator must amend the closure plan whenever:

(i) Changes in operating plans or facility design affect the closure plan, or

(ii) There is a change in the expected year of closure, if applicable, or

(iii) In conducting partial or final closure activities, unexpected events require a modification of the closure plan.

(2) The owner or operator must amend the closure plan at least 60 days prior to the proposed change in facility design or operation, or no later than 60 days after an unexpected event has occurred which has affected the closure plan. If an unexpected event occurs during the partial or final closure period, the owner or operator must amend the closure plan no later than 30 days after the unexpected event. These provisions also apply to owners or operators of surface impoundments and waste piles who intended to remove all hazardous wastes at closure, but are required to close as landfills in accordance with § 265.310.

(3) An owner or operator with an approved closure plan must submit the modified plan to the Regional Administrator at least 60 days prior to the proposed change in facility design or operation, or no more than 60 days after an unexpected event has occurred which has affected the closure plan. If an unexpected event has occurred during the partial or final closure period, the owner or operator must submit the modified plan no more than 30 days after the unexpected event. These provisions also apply to owners or operators of surface impoundments and waste piles who intended to remove all hazardous wastes at closure but are required to close as landfills in accordance with § 265.310. If the amendment to the plan is a major modification according to the criteria in § 270.41 and §270.42, the modification to the plan will be approved according to the procedures in § 265.112(d)(4).

(4) The Regional Administrator may request modifications to the plan under the conditions described in paragraph (c)(1) of this section. An owner or operator with an approved closure plan must submit the modified plan within 60 days of the request from the Regional Administrator, or within 30 days if the unexpected event occurs during partial or final closure. If the amendment is considered a major modification according to the criteria in §§ 270.41 and 270.42, the modification to the plan will be approved in accordance with the procedures in § 265.112(d)(4).

(d) *Notification of partial closure and final closure.* (1) The owner or operator must submit the closure plan to the Regional Administrator at least 180 days prior to the date on which he expects to begin closure of the first surface impoundment, waste pile, land treatment, or landfill unit, or final closure if it involves such a unit, whichever is earlier. The owner or operator must submit the closure plan to the Regional Administrator at least 45 days prior to the date on which he expects to begin final closure of a facility with only tanks, container storage, or incinerator units. Owners or operators with approved closure plans must notify the Regional Administrator in writing at least 60 days prior to the date on which he expects to begin closure of a surface impoundment, waste pile, landfill, or land treatment unit, or final closure of a facility involving such a unit. Owners and operators with approved closure plans must notify the Regional Administrator in writing at least 45 days prior to the date on which he expects to begin final closure of a facility with only tanks, container storage, or incinerator units.

(2) The date when he "expects to begin closure" must be either within 30 days after the date on which any hazardous waste management unit receives the known final volume of haz-

use must contain a note, prominently displayed, which states the owner's or operator's obligation to restrict disturbance of the hazardous waste disposal unit in accordance with the applicable Subpart G regulations.

§ 265.117 Post-closure care and use of property.

(a)(1) Post-closure care for each hazardous waste management unit subject to the requirements of §§ 265.117 through 265.120 must begin after completion of closure of the unit and continue for 30 years after that date. It must consist of at least the following:

(i) Monitoring and reporting in accordance with the requirements of Subparts F, K, L, M, and N of this part; and

(ii) Maintenance and monitoring of waste containment systems in accordance with the requirements of Subparts F, K, L, M, and N of this part.

(2) Any time preceding closure of a hazardous waste management unit subject to post-closure care requirements or final closure, or any time during the post-closure period for a particular hazardous waste disposal unit, the Regional Administrator may:

(i) Shorten the post-closure care period applicable to the hazardous waste management unit, or facility, if all disposal units have been closed, if he finds that the reduced period is sufficient to protect human health and the environment (e.g., leachate or ground-water monitoring results, characteristics of the hazardous waste, application of advanced technology, or alternative disposal, treatment, or reuse techniques indicate that the hazardous waste management unit or facility is secure); or

(ii) Extend the post-closure care period applicable to the hazardous waste management unit or facility, if he finds that the extended period is necessary to protect human health and the environment (e.g., leachate or ground-water monitoring results indicate a potential for migration of hazardous wastes at levels which may be harmful to human health and the environment).

(b) The Regional Administator may require, at partial and final closure, continuation of any of the security requirements of § 265.14 during part or all of the post-closure period when:

(1) Hazardous wastes may remain exposed after completion of partial or final closure; or

(2) Access by the public or domestic livestock may pose a hazard to human health.

(c) Post-closure use of property on or in which hazardous wastes remain after partial or final closure must never be allowed to disturb the integrity of the final cover, liner(s), or any other components of the containment system, or the function of the facility's monitoring systems, unless the Regional Administrator finds that the disturbance:

(1) Is necessary to the proposed use of the property, and will not increase the potential hazard to human health or the environment; or

(2) Is necessary to reduce a threat to human health or the environment.

(d) All post-closure care activities must be in accordance with the provisions of the approved post-closure plan as specified in § 265.118.

§ 265.118 Post-closure plan; amendment of plan.

(a) *Written plan.* By May 19, 1981, the owner or operator of a hazardous waste disposal unit must have a written post-closure plan. An owner or operator of a surface impoundment or waste pile that intends to remove all hazardous wastes at closure must prepare a post-closure plan and submit it to the Regional Administrator within 90 days of the date that the owner or operator or Regional Administrator determines that the hazardous waste management unit or facility must be closed as a landfill, subject to the requirements of §§ 265.117 through 265.120.

(b) Until final closure of the facility, a copy of the most current post-closure plan must be furnished to the Regional Administrator upon request, including request by mail. In addition, for facilities without approved post-closure plans, it must also be provided during site inspections, on the day of inspection, to any officer, employee or representative of the Agency who is duly designated by the Administrator.

After final closure has been certified, the person or office specified in § 265.118(c)(3) must keep the approved post-closure plan during the post-closure period.

(c) For each hazardous waste management unit subject to the requirements of this section, the post-closure plan must identify the activities that will be carried on after closure of each disposal unit and the frequency of these activities, and include at least:

(1) A description of the planned monitoring activities and frequencies at which they will be performed to comply with Subparts F, K, L, M, and N of this part during the post-closure care period; and

(2) A description of the planned maintenance activities, and frequencies at which they will be performed, to ensure:

(i) The integrity of the cap and final cover or other containment systems in accordance with the requirements of Subparts K, L, M, and N of this part; and

(ii) The function of the monitoring equipment in accordance with the requirements of Subparts F, K, L, M, and N of this part; and

(3) The name, address, and phone number of the person or office to contact about the hazardous waste disposal unit or facility during the post-closure care period.

(d) *Amendment of plan.* The owner or operator may amend the post-closure plan any time during the active life of the facility or during the post-closure care period. An owner or operator with an approved post-closure plan must submit a written request to the Regional Administrator to authorize a change to the approved plan. The written request must include a copy of the amended post-closure plan for approval by the Regional Administrator.

(1) The owner or operator must amend the post-closure plan whenever:

(i) Changes in operating plans or facility design affect the post-closure plan, or

(ii) Events which occur during the active life of the facility, including partial and final closures, affect the post-closure plan.

(2) The owner or operator must amend the post-closure plan at least 60 days prior to the proposed change in facility design or operation, or no later than 60 days after an unexpected event has occurred which has affected the post-closure plan.

(3) An owner or operator with an approved post-closure plan must submit the modified plan to the Regional Administrator at least 60 days prior to the proposed change in facility design or operation, or no more than 60 days after an unexpected event has occurred which has affected the post-closure plan. If an owner or operator of a surface impoundment or a waste pile who intended to remove all hazardous wastes at closure in accordance with § 265.228(b) or § 265.258(a) is required to close as a landfill in accordance with § 265.310, the owner or operator must submit a post-closure plan within 90 days of the determination by the owner or operator or Regional Administrator that the unit must be closed as a landfill. If the amendment to the post-closure plan is a major modification according to the criteria in §§ 270.41 and 270.42, the modification to the plan will be approved according to the procedures in § 265.118(f).

(4) The Regional Administrator may request modifications to the plan under the conditions described in paragraph (d)(1) of this section. An owner or operator with an approved post-closure plan must submit the modified plan no later than 60 days of the request from the Regional Administrator. If the amendment to the plan is considered a major modification according to the criteria in §§ 270.41 and 270.42, the modifications to the post-closure plan will be approved in accordance with the procedures in § 265.118(f). If the Regional Administrator determines that an owner or operator of a surface impoundment or waste pile who intended to remove all hazardous wastes at closure must close the facility as a landfill, the owner or operator must submit a post-closure plan for approval to the Regional Administrator within 90 days of the determination.

(e) The owner or operator of a facility with hazardous waste management units subject to these requirements

ardous wastes or, if there is a reasonable possibility that the hazardous waste management unit will receive additional hazardous wastes, no later than one year after the date on which the unit received the most recent volume of hazardous waste. If the owner or operator of a hazardous waste management unit can demonstrate to the Regional Administrator that the hazardous waste management unit or facility has the capacity to receive additional hazardous wastes and he has taken, and will continue to take, all steps to prevent threats to human health and the environment, including compliance with all interim status requirements, the Regional Administrator may approve an extension to this one-year limit.

(3) The owner or operator must submit his closure plan to the Regional Administrator no later than 15 days after:

(i) Termination of interim status except when a permit is issued simultaneously with termination of interim status; or

(ii) Issuance of a judicial decree or final order under section 3008 of RCRA to cease receiving hazardous wastes or close.

(4) The Regional Administrator will provide the owner or operator and the public, through a newspaper notice, the opportunity to submit written comments on the plan and request modifications to the plan no later than 30 days from the date of the notice. He will also, in response to a request or at his own discretion, hold a public hearing whenever such a hearing might clarify one or more issues concerning a closure plan. The Regional Administrator will give public notice of the hearing at least 30 days before it occurs. (Public notice of the hearing may be given at the same time as notice of the opportunity for the public to submit written comments, and the two notices may be combined.) The Regional Administrator will approve, modify, or disapprove the plan within 90 days of its receipt. If the Regional Administrator does not approve the plan he shall provide the owner or operator with a detailed written statement of reasons for the refusal and the owner or operator must modify the plan or submit a new plan for approval within 30 days after receiving such written statement. The Regional Administrator will approve or modify this plan in writing within 60 days. If the Regional Administrator modifies the plan, this modified plan becomes the approved closure plan. The Regional Administrator must assure that the approved plan is consistent with §§ 265.111 through 265.115 and the applicable requirements of §§ 265.90 *et seq.*, 265.197, 265.228, 265,258, 265.280, 265.310, 265.351, 265.381, and 265.404. A copy of the modified plan with a detailed statement of reasons for the modifications must be mailed to the owner or operator.

(e) *Removal of wastes and decontamination or dismantling of equipment.* Nothing in this section shall preclude the owner or operator from removing hazardous wastes and decontaminating or dismantling equipment in accordance with the approved partial or final closure plan at any time before or after notification of partial or final closure.

§ 265.113 Closure; time allowed for closure.

(a) Within 90 days after receiving the final volume of hazardous wastes at a hazardous waste management unit or facility, or within 90 days after approval of the closure plan, whichever is later, the owner or operator must treat, remove from the unit or facility, or dispose of on-site, all hazardous wastes in accordance with the approved closure plan. The Regional Administrator may approve a longer period if the owner or operator demonstrates that:

(1)(i) The activities required to comply with this paragraph will, of necessity, take longer than 90 days to complete; or

(ii)(A) The hazardous waste management unit or facility has the capacity to receive additional hazardous wastes; and

(B) There is a reasonable likelihood that he or another person will recommence operation of the hazardous waste management unit or the facility within one year; and

(C) Closure of the hazardous waste management unit or facility would be incompatible with continued operation of the site; and

(2) He has taken and will continue to take all steps to prevent threats to human health and the environment, including compliance with all applicable interim status requirements.

(b) The owner or operator must complete partial and final closure activities in accordance with the approved closure plan and within 180 days after receiving the final volume of hazardous wastes at the hazardous waste management unit or facility, or 180 days after approval of the closure plan, if that is later. The Regional Administrator may approve an extension to the closure period if the owner or operator demonstrates that:

(1) (i) The partial or final closure activities will, of necessity, take longer than 180 days to complete; or

(ii) (A) The hazardous waste management unit or facility has the capacity to receive additional hazardous wastes; and

(B) There is reasonable likelihood that he or another person will recommence operation of the hazardous waste management unit or the facility within one year; and

(C) Closure of the hazardous waste management unit or facility would be incompatible with continued operation of the site; and

(2) He has taken and will continue to take all steps to prevent threats to human health and the environment from the unclosed but not operating hazardous waste management unit or facility, including compliance with all applicable interim status requirements.

(c) The demonstrations referred to in § 265.113(a) and (b) must be made as follows: (1) The demonstrations in paragraph (a) must be made at least 30 days prior to the expiration of the 90-day period in paragraph (a); and (2) the demonstrations in paragraph (b) must be made at least 30 days prior to the expiration of the 180-day period in paragraph (b).

§ 265.114 Disposal or decontamination of equipment, structures and soils.

During the partial and final closure periods, all contaminated equipment, structures and soil must be properly disposed of, or decontaminated unless specified otherwise in §§ 265.228, 265.258, 265.280, or 265.310. By removing all hazardous wastes or hazardous constituents during partial and final closure, the owner or operator may become a generator of hazardous waste and must handle that hazardous waste in accordance with all applicable requirements of Part 262 of this chapter.

§ 265.115 Certification of closure.

Within 60 days of completion of closure of each hazardous waste surface impoundment, waste pile, land treatment, and landfill unit, and within 60 days of completion of final closure, the owner or operator must submit to the Regional Administrator, by registered mail, a certification that the hazardous waste management unit or facility, as applicable, has been closed in accordance with the specifications in the approved closure plan. The certification must be signed by the owner or operator and by an independent registered professional engineer. Documentation supporting the independent registered professional engineer's certification must be furnished to the Regional Administrator upon request until he releases the owner or operator from the financial assurance requirements for closure under § 265.143(h).

§ 265.116 Survey plat.

No later than the submission of the certification of closure of each hazardous waste disposal unit, an owner or operator must submit to the local zoning authority, or the authority with jurisdiction over local land use, and to the Regional Administrator, a survey plat indicating the location and dimensions of landfill cells or other hazardous waste disposal units with respect to permanently surveyed benchmarks. This plat must be prepared and certified by a professional land surveyor. The plat filed with the local zoning authority, or the authority with jurisdiction over local land

was located wishes to remove hazardous wastes and hazardous waste residues, the liner, if any, and all contaminated structures, equipment, and soils, he must request a modification to the approved post-closure plan in accordance with the requirements of § 265.118(g). The owner or operator must demonstrate that the removal of hazardous wastes will satisfy the criteria of § 265.117(c). By removing hazardous waste, the owner or operator may become a generator of hazardous waste and must manage it in accordance with all applicable requirements of this chapter. If the owner or operator is granted approval to conduct the removal activities, the owner or operator may request that the Regional Administrator approve either:

(1) The removal of the notation on the deed to the facility property or other instrument normally examined during title search, or

(2) The addition of a notation to the deed or instrument indicating the removal of the hazardous waste.

§ 265.120 Certification of completion of post-closure care.

No later than 60 days after the completion of the established post-closure care period for each hazardous waste disposal unit, the owner or operator must submit to the Regional Administrator, by registered mail, a certification that the post-closure care period for the hazardous waste disposal unit was performed in accordance with the specifications in the approved post-closure plan. The certification must be signed by the owner or operator and an independent registered professional engineer. Documentation supporting the independent registered professional engineer's certification must be furnished to the Regional Administrator upon request until he releases the owner or operator from the financial assurance requirements for post-closure care under § 265.145(h).

Subpart H—Financial Requirements

SOURCE: 47 FR 15064, Apr. 7, 1982, unless otherwise noted.

§ 265.140 Applicability.

(a) The requirements of §§ 265.142, 265.143 and 265.147 through 265.150 apply to owners or operators of all hazardous waste facilities, except as provided otherwise in this section or in § 265.1.

(b) The requirements of §§ 265.144 and 265.146 apply only to owners and operators of disposal facilities and tank systems that are required under § 265.197 to meet the requirements for landfills

(c) States and the Federal government are exempt from the requirements of this subpart.

[47 FR 15064, Apr. 7, 1982, as amended at 51 FR 16455, May 2, 1986; 51 FR 25479, July 14, 1986]

§ 265.141 Definitions of terms as used in this subpart.

(a) "Closure plan" means the plan for closure prepared in accordance with the requirements of § 265.112.

(b) "Current closure cost estimate" means the most recent of the estimates prepared in accordance with § 265.142 (a), (b), and (c).

(c) "Current post-closure cost estimate" means the most recent of the estimates prepared in accordance with § 265.144 (a), (b), and (c).

(d) "Parent corporation" means a corporation which directly owns at least 50 percent of the voting stock of the corporation which is the facility owner or operator; the latter corporation is deemed a "subsidiary" of the parent corporation.

(e) "Post-closure plan" means the plan for post-closure care prepared in accordance with the requirements of §§ 265.117 through 265.120.

(f) The following terms are used in the specifications for the financial tests for closure, post-closure care, and liability coverage. The definitions are intended to assist in the understanding of these regulations and are not intended to limit the meanings of terms in a way that conflicts with generally accepted accounting practices.

"Assets" means all existing and all probable future economic benefits obtained or controlled by a particular entity.

"Current assets" means cash or other assets or resources commonly identified as those which are reasonably expected to be realized in cash or sold or consumed during the normal operating cycle of the business.

"Current liabilities" means obligations whose liquidation is reasonably expected to require the use of existing resources properly classifiable as current assets or the creation of other current liabilities.

"Current plugging and abandonment cost estimate" means the most recent of the estimates prepared in accordance with § 144.62(a), (b), and (c) of this title.

"Independently audited' refers to an audit performed by an independent certified public accountant in accordance with generally accepted auditing standards.

"Liabilities" means probable future sacrifices of economic benefits arising from present obligations to transfer assets or provide services to other entities in the future as a result of past transactions or events.

"Net working capital" means current assets minus current liabilities.

"Net worth" means total assets minus total liabilities and is equivalent to owner's equity.

"Tangible net worth" means the tangible assets that remain after deducting liabilities; such assets would not include intangibles such as goodwill and rights to patents or royalties.

(g) In the liability insurance requirements the terms "bodily injury" and "property damage" shall have the meanings given these terms by applicable State law. However, these terms do not include those liabilities which, consistent with standard industry practice, are excluded from coverage in liability policies for bodily injury and property damage. The Agency intends the meanings of other terms used in the liability insurance requirements to be consistent with their common meanings within the insurance industry. The definitions given below of several of the terms are intended to assist in the understanding of these regulations and are not intended to limit their meanings in a way that conflicts with general insurance industry usage.

"Accidental occurrence" means an accident, including continuous or repeated exposure to conditions, which results in bodily injury or property damage neither expected nor intended from the standpoint of the insured.

"Legal defense costs" means any expenses that an insurer incurs in defending against claims of third parties brought under the terms and conditions of an insurance policy.

"Nonsudden accidental occurrence" means an occurrence which takes place over time and involves continuous or repeated exposure.

"Sudden accidental occurrence" means an occurrence which is not continuous or repeated in nature.

[47 FR 16558, Apr. 16, 1982, as amended at 51 FR 16456, May 2, 1986]

§ 265.142 Cost estimate for closure.

(a) The owner or operator must have a detailed written estimate, in current dollars, of the cost of closing the facility in accordance with the requirements in §§ 265.111 through 265.115 and applicable closure requirements of §§ 265.178, 265.197, 265.228, 265.258, 265.280, 265.310, 265.351, 265.381 and 265.404.

(1) The estimate must equal the cost of final closure at the point in the facility's active life when the extent and manner of its operation would make closure the most expensive, as indicated by its closure plan (see § 265.112(b)); and

(2) The closure cost estimate must be based on the costs to the owner or operator of hiring a third party to close the facility. A third party is a party who is neither a parent nor a subsidiary of the owner or operator. (See definition of parent corporation in § 265.141(d).) The owner or operator may use costs for on-site disposal if he can demonstrate that on-site disposal capacity will exist at all times over the life of the facility.

(3) The closure cost estimate may not incorporate any salvage value that may be realized by the sale of hazardous wastes, facility structures or equipment, land or other facility assets at the time of partial or final closures.

must submit his post-closure plan to the Regional Administrator at least 180 days before the date he expects to begin partial or final closure of the first hazardous waste disposal unit. The date he "expects to begin closure" of the first hazardous waste disposal unit must be either within 30 days after the date on which the hazardous waste management unit receives the known final volume of hazardous waste or, if there is a reasonable possibility that the hazardous waste management unit will receive additional hazardous wastes, no later than one year after the date on which the unit received the most recent volume of hazardous wastes. The owner or operator must submit the post-closure plan to the Regional Administrator no later than 15 days after:

(1) Termination of interim status (except when a permit is issued to the facility simultaneously with termination of interim status); or

(2) Issuance of a judicial decree or final orders under section 3008 of RCRA to cease receiving wastes or close.

(f) The Regional Administrator will provide the owner or operator and the public, through a newspaper notice, the opportunity to submit written comments on the post-closure plan and request modifications to the plan no later than 30 days from the date of the notice. He will also, in response to a request or at his own discretion, hold a public hearing whenever such a hearing might clarify one or more issues concerning a post-closure plan. The Regional Administrator will give public notice of the hearing at least 30 days before it occurs. (Public notice of the hearing may be given at the same time as notice of the opportunity for the public to submit written comments, and the two notices may be combined.) The Regional Administrator will approve, modify, or disapprove the plan within 90 days of its receipt. If the Regional Administrator does not approve the plan he shall provide the owner or operator with a detailed written statement of reasons for the refusal and the owner or operator must modify the plan or submit a new plan for approval within 30 days after receiving such written statement. The Regional Administrator will approve or modify this plan in writing within 60 days. If the Regional Administrator modifies the plan, this modified plan becomes the approved post-closure plan. The Regional Administrator must ensure that the approved post-closure plan is consistent with §§ 265.117 through 265.120. A copy of the modified plan with a detailed statement of reasons for the modifications must be mailed to the owner or operator.

(g) The post-closure plan and length of the post-closure care period may be modified any time prior to the end of the post-closure care period in either of the following two ways:

(1) The owner or operator or any member of the public may petition the Regional Administrator to extend or reduce the post-closure care period applicable to a hazardous waste management unit or facility based on cause, or alter the requirements of the post-closure care period based on cause.

(i) The petition must include evidence demonstrating that:

(A) The secure nature of the hazardous waste management unit or facility makes the post-closure care requirement(s) unnecessary or supports reduction of the post-closure care period specified in the current post-closure plan (e.g., leachate or ground-water monitoring results, characteristics of the wastes, application of advanced technology, or alternative disposal, treatment, or re-use techniques indicate that the facility is secure), or

(B) The requested extension in the post-closure care period or alteration of post-closure care requirements is necessary to prevent threats to human health and the environment (e.g., leachate or ground-water monitoring results indicate a potential for migration of hazardous wastes at levels which may be harmful to human health and the environment).

(ii) These petitions will be considered by the Regional Administrator only when they present new and relevant information not previously considered by the Regional Administrator. Whenever the Regional Administrator is considering a petition, he will provide the owner or operator and the public, through a newspaper notice, the opportunity to submit written comments within 30 days of the date of the notice. He will also, in response to a request or at his own discretion, hold a public hearing whenever a hearing might clarify one or more issues concerning the post-closure plan. The Regional Administrator will give the public notice of the hearing at least 30 days before it occurs. (Public notice of the hearing may be given at the same time as notice of the opportunity for written public comments, and the two notices may be combined.) After considering the comments, he will issue a final determination, based upon the criteria set forth in paragraph (g)(1) of this section.

(iii) If the Regional Administrator denies the petition, he will send the petitioner a brief written response giving a reason for the denial.

(2) The Regional Administrator may tentatively decide to modify the post-closure plan if he deems it necessary to prevent threats to human health and the environment. He may propose to extend or reduce the post-closure care period applicable to a hazardous waste management unit or facility based on cause or alter the requirements of the post-closure care period based on cause.

(i) The Regional Administrator will provide the owner or operator and the affected public, through a newspaper notice, the opportunity to submit written comments within 30 days of the date of the notice and the opportunity for a public hearing as in paragraph (g)(1)(ii) of this section. After considering the comments, he will issue a final determination.

(ii) The Regional Administrator will base his final determination upon the same criteria as required for petitions under paragraph (g)(1)(i) of this section. A modification of the post-closure plan may include, where appropriate, the temporary suspension rather than permanent deletion of one or more post-closure care requirements. At the end of the specified period of suspension, the Regional Administrator would then determine whether the requirement(s) should be permanently discontinued or reinstated to prevent threats to human health and the environment.

§ 265.119 Post-closure notices.

(a) No later than 60 days after certification of closure of each hazardous waste disposal unit, the owner or operator must submit to the local zoning authority, or the authority with jurisdiction over local land use, and to the Regional Administrator, a record of the type, location, and quantity of hazardous wastes disposed of within each cell or other disposal unit of the facility. For hazardous wastes disposed of before January 12, 1981, the owner or operator must identify the type, location and quantity of the hazardous wastes to the best of his knowledge and in accordance with any records he has kept.

(b) Within 60 days of certification of closure of the first hazardous waste disposal unit and within 60 days of certification of closure of the last hazardous waste disposal unit, the owner or operator must:

(1) Record, in accordance with State law, a notation on the deed to the facility property—or on some other instrument which is normally examined during title search—that will in perpetuity notify any potential purchaser of the property that:

(i) The land has been used to manage hazardous wastes; and

(ii) Its use is restricted under 40 CFR Subpart G regulations; and

(iii) The survey plat and record of the type, location, and quantity of hazardous wastes disposed of within each cell or other hazardous waste disposal unit of the facility required by §§ 265.116 and 265.119(a) have been filed with the local zoning authority or the authority with jurisdiction over local land use and with the Regional Administrator; and

(2) Submit a certification signed by the owner or operator that he has recorded the notation specified in paragraph (b)(1) of this section and a copy of the document in which the notation has been placed, to the Regional Administrator.

(c) If the owner or operator or any subsequent owner of the land upon which a hazardous waste disposal unit

20 142 O—88——21

permittee must submit a letter report, including a copy of the manifest, to the Director. (See 40 CFR 264.72.)

(8) *Unmanifested waste report:* This report must be submitted to the Director within 15 days of receipt of unmanifested waste. (See 40 CFR 264.76)

(9) *Biennial report:* A biennial report must be submitted covering facility activities during odd numbered calendar years. (See 40 CFR 264.75.)

(10) *Other noncompliance.* The permittee shall report all instances of noncompliance not reported under paragraphs (l)(4), (5), and (6) of this section, at the time monitoring reports are submitted. The reports shall contain the information listed in paragraph (l)(6) of this section.

(11) *Other information.* Where the permittee becomes aware that it failed to submit any relevant facts in a permit application, or submitted incorrect information in a permit application or in any report to the Director, it shall promptly submit such facts or information.

(Clean Water Act (33 U.S.C. 1251 et seq.), Safe Drinking Water Act (42 U.S.C. 300f et seq.), Clean Air Act (42 U.S.C. 7401 et seq.), Resource Conservation and Recovery Act (42 U.S.C. 6901 et seq.))

[48 FR 14228, Apr. 1, 1983, as amended at 48 FR 30114, June 30, 1983; 48 FR 39622, Sept. 1, 1983; 50 FR 28752, July 15, 1985]

§ 270.31 Requirements for recording and reporting of monitoring results.

All permits shall specify:

(a) Requirements concerning the proper use, maintenance, and installation, when appropriate, of monitoring equipment or methods (including biological monitoring methods when appropriate);

(b) Required monitoring including type, intervals, and frequency sufficient to yield data which are representative of the monitored activity including, when appropriate, continuous monitoring;

(c) Applicable reporting requirements based upon the impact of the regulated activity and as specified in Parts 264, 266 and 267. Reporting shall be no less frequent than specified in the above regulations.

§ 270.32 Establishing permit conditions.

(a) In addition to conditions required in all permits (§ 270.30), the Director shall establish conditions, as required on a case-by-case basis, in permits under §§ 270.50 (duration of permits), 270.33(a) (schedules of compliance), 270.31 (monitoring), and for EPA issued permits only, 270.33(b) (alternate schedules of compliance) and 270.3 (considerations under Federal law).

(b)(1) Each RCRA permit shall include permit conditions necessary to achieve compliance with the Act and regulations, including each of the applicable requirements specified in Parts 264 and 266 through 268 of this chapter. In satisfying this provision, the Administrator may incorporate applicable requirements of Parts 264 and 266 through 268 of this chapter directly into the permit or establish other permit conditions that are based on these parts.

(2) Each permit issued under section 3005 of this act shall contain terms and conditions as the Administrator or State Director determines necessary to protect human health and the environment.

(c) For a State issued permit, an applicable requirement is a State statutory or regulatory requirement which takes effect prior to final administrative disposition of a permit. For a permit issued by EPA, an applicable requirement is a statutory or regulatory requirement (including any interim final regulation) which takes effect prior to the issuance of the permit (except as provided in § 124.86(c) for RCRA permits being processed under Subpart E or F of Part 124). Section 124.14 (reopening of comment period) provides a means for reopening EPA permit proceedings at the discretion of the Director where new requirements become effective during the permitting process and are of sufficient magnitude to make additional proceedings desirable. For State and EPA administered programs, an applicable requirement is also any requirement which takes effect prior to the modification or revocation and reissuance of a permit, to the extent allowed in § 270.41.

(d) New or reissued permits, and to the extent allowed under § 270.41, modified or revoked and reissued permits, shall incorporate each of the applicable requirements referenced in this section and in 40 CFR 270.31.

(e) *Incorporation.* All permit conditions shall be incorporated either expressly or by reference. If incorporated by reference, a specific citation to the applicable regulations or requirements must be given in the permit.

[48 FR 14228, Apr. 1, 1983, as amended at 50 FR 28752, July 15, 1985; 51 FR 40653, Nov. 7, 1986]

§ 270.33 Schedules of compliance.

(a) The permit may, when appropriate, specify a schedule of compliance leading to compliance with the Act and regulations.

(1) *Time for compliance.* Any schedules of compliance under this section shall require compliance as soon as possible.

(2) *Interim dates.* Except as provided in paragraph (b)(1)(ii) of this section, if a permit establishes a schedule of compliance which exceeds 1 year from the date of permit issuance, the schedule shall set forth interim requirements and the dates for their achievement.

(i) The time between interim dates shall not exceed 1 year.

(ii) If the time necessary for completion of any interim requirement is more than 1 year and is not readily divisible into stages for completion, the permit shall specify interim dates for the submission of reports of progress toward completion of the interim requirements and indicate a projected completion date.

(3) *Reporting.* The permit shall be written to require that no later than 14 days following each interim date and the final date of compliance, the permittee shall notify the Director in writing, of its compliance or noncompliance with the interim or final requirements.

(b) *Alternative schedules of compliance.* An RCRA permit applicant or permittee may cease conducting regulated activities (by receiving a terminal volume of hazardous waste and, for treatment and storage HWM facilities, closing pursuant to applicable requirements; and, for disposal HWM facilities, closing and conducting post-closure care pursuant to applicable requirements) rather than continue to operate and meet permit requirements as follows:

(1) If the permittee decides to cease conducting regulated activities at a given time within the term of a permit which has already been issued:

(i) The permit may be modified to contain a new or additional schedule leading to timely cessation of activities; or

(ii) The permittee shall cease conducting permitted activities before noncompliance with any interim or final compliance schedule requirement already specified in the permit.

(2) If the decision to cease conducting regulated activities is made before issuance of a permit whose term will include the termination date, the permit shall contain a schedule leading to termination which will ensure timely compliance with applicable requirements.

(3) If the permittee is undecided whether to cease conducting regulated activities, the Director may issue or modify a permit to contain two schedules as follows:

(i) Both schedules shall contain an identical interim deadline requiring a final decision on whether to cease conducting regulated activities no later than a date which ensures sufficient time to comply with applicable requirements in a timely manner if the decision is to continue conducting regulated activities;

(ii) One schedule shall lead to timely compliance with applicable requirements;

(iii) The second schedule shall lead to cessation of regulated activities by a date which will ensure timely compliance with applicable requirements;

(iv) Each permit containing two schedules shall include a requirement that after the permittee has made a final decision under paragraph (b)(3)(i) of this section it shall follow the schedule leading to compliance if the decision is to continue conducting regulated activities, and follow the schedule leading to termination if the decision is to cease conducting regulated activities.

action that it would have been necessary to halt or reduce the permitted activity in order to maintain compliance with the conditions of this permit.

(d) In the event of noncompliance with the permit, the permittee shall take all reasonable steps to minimize releases to the environment, and shall carry out such measures as are reasonable to prevent significant adverse impacts on human health or the environment.

(e) *Proper operation and maintenance.* The permittee shall at all times properly operate and maintain all facilities and systems of treatment and control (and related appurtenances) which are installed or used by the permittee to achieve compliance with the conditions of this permit. Proper operation and maintenance includes effective performance, adequate funding, adequate operator staffing and training, and adequate laboratory and process controls, including appropriate quality assurance procedures. This provision requires the opration of back-up or auxiliary facilities or similar systems only when necessary to achieve compliance with the conditions of the permit.

(f) *Permit actions.* This permit may be modified, revoked and reissued, or terminated for cause. The filing of a request by the permittee for a permit modification, revocation and reissuance, or termination, or a notification of planned changes or anticipated noncompliance, does not stay any permit condition.

(g) *Property rights.* The permit does not convey any property rights of any sort, or any exclusive privilege.

(h) *Duty to provide information.* The permittee shall furnish to the Director, within a reasonable time, any relevant information which the Director may request to determine whether cause exists for modifying, revoking and reissuing, or terminating this permit, or to determine compliance with this permit. The permittee shall also furnish to the Director, upon request, copies of records required to be kept by this permit.

(i) *Inspection and entry.* The permit te[illegible] all allow the Director, or an au th[illegible]ed representative, upon the presentation of credentials and other documents as may be required by law to:

(1) Enter at reasonable times upon the permittee's premises where a regulated facility or activity is located or conducted, or where records must be kept under the conditions of this permit;

(2) Have access to and copy, at reasonable times, any records that must be kept under the conditions of this permit;

(3) Inspect at reasonable times any facilities, equipment (including monitoring and control equipment), practices, or operations regulated or required under this permit; and

(4) Sample or monitor at reasonable times, for the purposes of assuring permit compliance or as otherwise authorized by RCRA, any substances or parameters at any location.

(j) *Monitoring and records.* (1) Samples and measurements taken for the purpose of monitoring shall be representative of the monitored activity.

(2) The permittee shall retain records of all monitoring information, including all calibration and maintenance records and all original strip chart recordings for continuous monitoring instrumentation, copies of all reports required by this permit, the certification required by § 264.73(b)(9) of this chapter, and records of all data used to complete the application for this permit, for a period of at least 3 years from the date of the sample, measurement, report, certification, or application. This period may be extended by request of the Director at any time. The permittee shall maintain records from all ground-water monitoring wells and associated ground-water surface elevations, for the active life of the facility, and for disposal facilities for the post-closure care period as well.

(3) Records for monitoring information shall include:

(i) The date, exact place, and time of sampling or measurements;

(ii) The individual(s) who performed the sampling or measurements;

(iii) The date(s) analyses were performed;

(iv) The individual(s) who performed the analyses;

(v) The analytical techniques or methods used; and

(vi) The results of such analyses.

(k) *Signatory requirements.* All applications, reports, or information submitted to the Director shall be signed and certified (See § 270.11.)

(l) *Reporting requirements.* (1) *Planned changes.* The permittee shall give notice to the Director as soon as possible of any planned physical alterations or additions to the permitted facility.

(2) *Anticipated noncompliance.* The permittee shall give advance notice to the Director of any planned changes in the permitted facility or activity which may result in noncompliance with permit requirements. For a new facility, the permittee may not treat, store, or dispose of hazardous waste; and for a facility being modified, the permittee may not treat, store, or dispose of hazardous waste in the modified portion of the facility, until:

(i) The permittee has submitted to the Director by certified mail or hand delivery a letter signed by the permittee and a registered professional engineer stating that the facility has been constructed or modified in compliance with the permit; and

(ii)(A) The Director has inspected the modified or newly constructed facility and finds it is in compliance with the conditions of the permit; or

(B) Within 15 days of the date of submission of the letter in paragraph (l)(2)(i) of this section, the permittee has not received notice from the Director of his or her intent to inspect, prior inspection is waived and the permittee may commence treatment, storage, or disposal of hazardous waste.

(3) *Transfers.* This permit is not transferable to any person except after notice to the Director. The Director may require modification or revocation and reissuance of the permit to change the name of the permittee and incorporate such other requirements as may be necessary under RCRA. (See § 270.40)

(4) *Monitoring reports.* Monitoring results shall be reported at the intervals specified elsewhere in this permit.

(5) *Compliance schedules.* Reports of compliance or noncompliance with, or any progress reports on, interim and final requirements contained in any compliance schedule of this permit shall be submitted no later than 14 days following each schedule date.

(6) *Twenty-four hour reporting.* (i) The permittee shall report any noncompliance which may endanger health or the environment orally within 24 hours from the time the permittee becomes aware of the circumstances, including:

(A) Information concerning release of any hazardous waste that may cause an endangerment to public drinking water supplies.

(B) Any information of a release or discharge of hazardous waste or of a fire or explosion from the HWM facility, which could threaten the environment or human health outside the facility.

(ii) The description of the occurrence and its cause shall include:

(A) Name, address, and telephone number of the owner or operator;

(B) Name, address, and telephone number of the facility;

(C) Date, time, and type of incident;

(D) Name and quantity of material(s) involved;

(E) The extent of injuries, if any;

(F) An assessment of actual or potential hazards to the environment and human health outside the facility, where this is applicable; and

(G) Estimated quantity and disposition of recovered material that resulted from the incident.

(iii) A written submission shall also be provided within 5 days of the time the permittee becomes aware of the circumstances. The written submission shall contain a description of the noncompliance and its cause; the period of noncompliance including exact dates and times, and if the noncompliance has not been corrected, the anticipated time it is expected to continue; and steps taken or planned to reduce, eliminate, and prevent reoccurrence of the noncompliance. The Director may waive the five day written notice requirement in favor of a written report within fifteen days.

(7) *Manifest discrepancy report:* If a significant discrepancy in a manifest is discovered, the permittee must attempt to reconcile the discrepancy. If not resolved within [illegible]n days, the

(h) If incompatible wastes, or incompatible wastes and materials will be placed in a surface impoundment, an explanation of how § 264.230 will be complied with.

(i) A waste management plan for EPA Hazardous Waste Nos. FO20, FO21, FO22, FO23, FO26, and FO27 describing how the surface impoundment is or will be designed, constructed, operated, and maintained to meet the requirements of § 264.231. This submission must address the following items as specified in § 264.231:

(1) The volume, physical, and chemical characteristics of the wastes, including their potential to migrate through soil or to volatilize or escape into the atmosphere;

(2) The attenuative properties of underlying and surrounding soils or other materials;

(3) The mobilizing properties of other materials co-disposed with these wastes; and

(4) The effectiveness of additional treatment, design, or monitoring techniques.

[48 FR 14228, Apr. 1, 1983, as amended at 50 FR 2006, Jan. 14, 1985; 50 FR 28752, July 15, 1985]

§ 270.18 Specific Part B information requirements for waste piles.

Except as otherwise provided in § 264.1, owners and operators of facilities that store or treat hazardous waste in waste piles must provide the following additional information:

(a) A list of hazardous wastes placed or to be placed in each waste pile;

(b) If an exemption is sought to § 264.251 and Subpart F of Part 264 as provided by § 264.250(c) or § 264.90(2), an explanation of how the standards of § 264.250(c) will be complied with or detailed plans and an engineering report describing how the requirements of § 264.90(b)(2) will be met.

(c) Detailed plans and an engineering report describing how the pile is or will be designed, constructed, operated and maintained to meet the requirements of § 264.251. This submission must address the following items as specified in § 264.251:

(1) The liner system (except for an existing portion of a pile). If an exemption from the requirement for a liner is sought, as provided by § 264.252(b), the owner or operator must submit detailed plans and engineering and hydrogeologic reports, as applicable, describing alternate design and operating practices that will, in conjunction with location aspects, prevent the migration of any hazardous constituents into the ground water or surface water at any future time;

(2) Control of run-on;

(3) Control of run-off;

(4) Management of collection and holding units associated with run-on and run-off control systems; and

(5) Control of wind dispersal of particulate matter, where applicable;

(d) A description of how each waste pile, including the liner and appurtenances for control of run-on and run-off, will be inspected in order to meet the requirements of § 264.254(a) and (b). This information should be included in the inspection plan submitted under § 270.14(b)(5).

(e) If treatment is carried out on or in the pile, details of the process and equipment used, and the nature and quality of the residuals;

(f) If ignitable or reactive wastes are to be placed in a waste pile, an explanation of how the requirements of § 264.256 will be complied with;

(g) If incompatible wastes, or incompatible wastes and materials will be place in a waste pile, an explanation of how § 264.257 will be complied with;

(h) A description of how hazardous waste residues and contaminated materials will be removed from the waste pile at closure, as required under § 264.258(a). For any waste not to be removed from the waste pile upon closure, the owner or operator must submit detailed plans and an engineering report describing how § 264.310 (a) and (b) will be complied with. This information should be included in the closure plan and, where applicable, the post-closure plan submitted under § 270.14(b)(13).

(i) A waste management plan for EPA Hazardous Waste Nos. FO20, FO21, FO22, FO23, FO26, and FO27 describing how a waste pile that is not enclosed (as defined in § 264.250(c)) is or will be designed, constructed, operated, and maintained to meet the requirements of § 264.259. This submission must address the following items as specified in § 264.259:

(1) The volume, physical, and chemical characteristics of the wastes to be disposed in the waste pile, including their potential to migrate through soil or to volatilize or escape into the atmosphere;

(2) The attenuative properties of underlying and surrounding soils or other materials;

(3) The mobilizing properties of other materials co-disposed with these wastes; and

(4) The effectiveness of additional treatment, design, or monitoring techniques.

[48 FR 14228, Apr. 1, 1983, as amended at 50 FR 2006, Jan. 14, 1985; 50 FR 28752, July 15, 1985]

§ 270.19 Specific Part B information requirements for incinerators.

Except as § 264.340 of this chapter provides otherwise, owners and operators of facilities that incinerate hazardous waste must fulfill the requirements of (a), (b), or (c) of this section.

(a) When seeking an exemption under § 264.340 (b) or (c) of this chapter (Ignitable, corrosive, or reactive wastes only):

(1) Documentation that the waste is listed as a hazardous waste in Part 261, Subpart D of this chapter, solely because it is ignitable (Hazard Code I) or corrosive (Hazard Code C) or both; or

(2) Documentation that the waste is listed as a hazardous waste in Part 261, Subpart D of this chapter, solely because it is reactive (Hazard Code R) for characteristics other than those listed in § 261.23(a) (4) and (5) of this chapter, and will not be burned when other hazardous wastes are present in the combustion zone; or

(3) Documentation that the waste is a hazardous waste solely because it possesses the characteristic of ignitability, corrosivity, or both, as determined by the tests for characteristics of hazardous waste under Part 261, Subpart C of this chapter; or

(4) Documentation that the waste is a hazardous waste solely because it possesses the reactivity characteristics listed in § 261.23(a) (1), (2), (3), (6), (7), or (8) of this chapter, and that it will not be burned when other hazardous wastes are present in the combustion zone; or

(b) Submit a trial burn plan or the results of a trial burn, including all required determinations, in accordance with § 270.62; or

(c) In lieu of a trial burn, the applicant may submit the following information:

(1) An analysis of each waste or mixture of wastes to be burned including:

(i) Heat value of the waste in the form and composition in which it will be burned.

(ii) Viscosity (if applicable), or description of physical form of the waste.

(iii) An identification of any hazardous organic constituents listed in Part 261, Appendix VIII, of this chapter, which are present in the waste to be burned, except that the applicant need not analyze for constituents listed in Part 261, Appendix VIII, of this chapter which would reasonably not be expected to be found in the waste. The constituents excluded from analysis must be identified and the basis for their exclusion stated. The waste analysis must rely on analytical techniques specified in "Test methods for the evaluation of Solid Waste, Physical/Chemical Methods" (incorporated by reference, see § 270.6 and referenced in 40 CFR Part 261, Appendix III), or their equivalent.

(iv) An approximate quantification of the hazardous constituents identified in the waste, within the precision produced by the analytical methods specified in "Test Methods for the Evaluation of Solid Waste, Physical/Chemical Methods" (incorporated by reference, see § 270.6).

(v) A quantification of those hazardous constituents in the waste which may be designated as POHC's based on data submitted from other trial or operational burns which demonstrate compliance with the performance standards in § 264.343 of this chapter.

(2) A detailed engineering description of the incinerator, including:

(i) Manufacturer's name and model number of incinerator.

(ii) Type of incinerator.

(v) Specification of all wastes that have been managed at the unit, to the extent available.

(2) The owner or operator of any facility containing one or more solid waste management units must submit all available information pertaining to any release of hazardous wastes or hazardous constituents from such unit or units.

(3) The owner/operator must conduct and provide the results of sampling and analysis of groundwater, landsurface, and subsurface strata, surface water, or air, which may include the installation of wells, where the Director ascertains it is necessary to complete a RCRA Facility Assessment that will determine if a more complete investigation is necessary.

(Approved by the Office of Management and Budget under control numbers 2050-0009, 2050-0002, and 2050-0007)

[48 FR 14228, Apr. 1, 1983; 48 FR 30114, June 30, 1983, as amended at 50 FR 2006, Jan. 14, 1985; 51 FR 16458, May 2, 1986; 51 FR 25486, July 14, 1986; 51 FR 40653, Nov. 7, 1986; 52 FR 23450, July 9, 1987; 52 FR 25953, July 9, 1987; 52 FR 33936, Sept. 9, 1987; 52 FR 45799, Dec. 1, 1987; 52 FR 46965, Dec. 10, 1987]

§ 270.15 Specific Part B information requirements for containers.

Except as otherwise provided in § 264.170, owners or operators of facilities that store containers of hazardous waste must provide the following additional information:

(a) A description of the containment system to demonstrate compliance with § 264.175. Show at least the following:

(1) Basic design parameters, dimensions, and materials of construction.

(2) How the design promotes drainage or how containers are kept from contact with standing liquids in the containment system.

(3) Capacity of the containment system relative to the number and volume of containers to be stored.

(4) Provisions for preventing or managing run-on.

(5) How accumulated liquids can be analyzed and removed to prevent overflow.

(b) For storage areas that store containers holding wastes that do not contain free liquids, a demonstration of compliance with § 264.175(c), including:

(1) Test procedures and results or other documentation or information to show that the wastes do not contain free liquids; and

(2) A description of how the storage area is designed or operated to drain and remove liquids or how containers are kept from contact with standing liquids.

(c) Sketches, drawings, or data demonstrating compliance with § 264.176 (location of buffer zone and containers holding ignitable or reactive wastes) and § 264.177(c) (location of incompatible wastes), where applicable.

(d) Where incompatible wastes are stored or otherwise managed in containers, a description of the procedures used to ensure compliance with §§ 264.177 (a) and (b), and 264.17 (b) and (c).

[48 FR 14228, Apr. 1, 1983; 48 FR 30114, June 30, 1983]

§ 270.16 Specific Part B information requirements for tank systems.

Except as otherwise provided in § 264.190, owners and operators of facilities that use tanks to store or treat hazardous waste must provide the following additional information:

(a) A written assessment that is reviewed and certified by an independent, qualified, registered professional engineer as to the structural integrity and suitability for handling hazardous waste of each tank system, as required under §§ 264.191 and 264.192;

(b) Dimensions and capacity of each tank;

(c) Description of feed systems, safety cutoff, bypass systems, and pressure controls (e.g., vents);

(d) A diagram of piping, instrumentation, and process flow for each tank system;

(e) A description of materials and equipment used to provide external corrosion protection, as required under § 264.192(a)(3)(ii);

(f) For new tank systems, a detailed description of how the tank system(s) will be installed in compliance with § 264.192 (b), (c), (d), and (e);

(g) Detailed plans and description of how the secondary containment system for each tank system is or will be designed, constructed, and operated to meet the requirements of § 264.193 (a), (b), (c), (d), (e), and (f);

(h) For tank systems for which a variance from the requirements of § 264.193 is sought (as provided by §§ 264.193(g)):

(1) Detailed plans and engineering and hydrogeologic reports, as appropriate, describing alternate design and operating practices that will, in conjunction with location aspects, prevent the migration of any hazardous waste or hazardous constituents into the ground water or surface water during the life of the facility, or

(2) A detailed assessment of the substantial present or potential hazards posed to human health or the environment should a release enter the environment.

(i) Description of controls and practices to prevent spills and overflows, as required under § 264.194(b); and

(j) For tank systems in which ignitable, reactive, or incompatible wastes are to be stored or treated, a description of how operating procedures and tank system and facility design will achieve compliance with the requirements of §§ 264.198 and 264.199.

(Information collection requirements contained in paragraphs (a)-(j) were approved by the Office of Management and Budget under control number 2050-0050)

[51 FR 25486, July 14, 1986; 51 FR 29431, Aug. 15, 1986]

§ 270.17 Specific Part B information requirements for surface impoundments.

Except as otherwise provided in § 264.1, owners and operators of facilities that store, treat or dispose of hazardous waste in surface impoundments must provide the following additional information:

(a) A list of the hazardous wastes placed or to be placed in each surface impoundment;

(b) Detailed plans and an engineering report describing how the surface impoundment is or will be designed, constructed, operated and maintained to meet the requirements of § 264.221. This submission must address the following items as specified in § 264.221:

(1) The liner system (except for an existing portion of a surface impoundment). If an exemption from the requirement for a liner is sought as provided by § 264.221(b), submit detailed plans and engineering and hydrogeologic reports, as appropriate, describing alternate design and operating practices that will, in conjunction with location aspects, prevent the migration of any hazardous constituents into the ground water or surface water at any future time;

(2) Prevention of overtopping; and

(3) Structural integrity of dikes;

(c) A description of how each surface impoundment, including the liner and cover systems and appurtenances for control of overtopping, will be inspected in order to meet the requirements of § 264.226(a) and (b). This information should be included in the inspection plan submitted under § 270.14(b)(5);

(d) A certification by a qualified engineer which attests to the structural integrity of each dike, as required under § 264.226(c). For new units, the owner or operator must submit a statement by a qualified engineer that he will provide such a certification upon completion of construction in accordance with the plans and specifications;

(e) A description of the procedure to be used for removing a surface impoundment from service, as required under § 264.227(b) and (c). This information should be included in the contingency plan submitted under § 270.14(b)(7);

(f) A description of how hazardous waste residues and contaminated materials will be removed from the unit at closure, as required under § 264.228(a)(1). For any wastes not to be removed from the unit upon closure, the owner or operator must submit detailed plans and an engineering report describing how § 264.228(a)(2) and (b) will be complied with. This information should be included in the closure plan and, where applicable, the post-closure plan submitted under § 270.14(b)(13);

(g) If ignitable or reactive wastes are to be placed in a surface impoundment, an explanation of how § 264.229 will be complied with:

FO21, FO22, FO23, FO26, and FO27 describing how a land treatment facility is or will be designed, constructed, operated, and maintained to meet the requirements of § 264.283. This submission must address the following items as specified in § 264.283:

(1) The volume, physical, and chemical characteristics of the wastes, including their potential to migrate through soil or to volatilize or escape into the atmosphere;

(2) The attentuative properties of underlying and surrounding soils or other materials;

(3) The mobilizing properties of other materials co-disposed with these wastes; and

(4) The effectiveness of additional treatment, design, or monitoring techniques.

[48 FR 14228, Apr. 1, 1983; 48 FR 30114, June 30, 1983, as amended at 50 FR 2006, Jan. 14, 1985]

§ 270.21 Specific Part B information requirements for landfills.

Except as otherwise provided in § 264.1, owners and operators of facilities that dispose of hazardous waste in landfills must provide the following additional information:

(a) A list of the hazardous wastes placed or to be placed in each landfill or landfill cell;

(b) Detailed plans and an engineering report describing how the landfill is or will be designed, constructed, operated and maintained to comply with the requirements of § 264.301. This submission must address the following items as specified in § 264.301:

(1) The liner system and leachate collection and removal system (except for an existing portion of a landfill). If an exemption from the requirements for a liner and a leachate collection and removal system is sought as provided by § 264.301(b), submit detailed plans and engineering and hydrogeologic reports, as appropriate, describing alternate design and operating practices that will, in conjunction with location aspects, prevent the migration of any hazardous constituent into the ground water or surface water at any future time;

(2) Control of run-on;

(3) Control of run-off;

(4) Management of collection and holding facilities associated with run-on and run-off control systems; and

(5) Control of wind dispersal of particulate matter, where applicable;

(c) If an exemption from Subpart F of Part 264 is sought, as provided by § 264.302(a), the owner or operator must submit detailed plans and an engineering report explaining the location of the saturated zone in relation to the landfill, the design of a double-liner system that incorporates a leak detection system between the liners, and a leachate collection and removal system above the liners;

(d) A description of how each landfill, including the liner and cover systems, will be inspected in order to meet the requirements of § 264.303 (a) and (b). This information should be included in the inspection plan submitted under § 270.14(b)(5).

(e) Detailed plans and an engineering report describing the final cover which will be applied to each landfill or landfill cell at closure in accordance with § 264.310(a), and a description of how each landfill will be maintained and monitored after closure in accordance with § 264.310(b). This information should be included in the closure and post-closure plans submitted under § 270.14(b)(13).

(f) If ignitable or reactive wastes will be landfilled, an explanation of how the standards of § 264.312 will be complied with;

(g) If incompatible wastes, or incompatible wastes and materials will be landfilled, an explanation of how § 264.313 will be complied with;

(h) If bulk or non-containerized liquid waste or wastes containing free liquids is to be landfilled prior to May 8, 1985, an explanation of how the requirements of § 264.314(a) will be complied with;

(i) If containers of hazardous waste are to be landfilled, an explanation of how the requirements of § 264.315 or § 264.316, as applicable, will be complied with.

(j) A waste management plan for EPA Hazardous Waste Nos. FO20, FO21, FO22, FO23, FO26, and FO27 describing how a landfill is or will be designed, constructed, operated, and maintained to meet the requirements of § 264.317. This submission must address the following items as specified in § 264.317:

(1) The volume, physical, and chemical characteristics of the wastes, including their potential to migrate through soil or to volatilize or escape into the atmosphere;

(2) The attenuative properties of underlying and surrounding soils or other materials;

(3) The mobilizing properties of other materials co-disposed with these wastes; and

(4) The effectiveness of additional treatment, design, or monitoring techniques.

[48 FR 14228, Apr. 1, 1983; 48 FR 30114, June 30, 1983, as amended at 50 FR 2006, Jan. 14, 1985; 50 FR 28752, July 15, 1985]

§§ 270.22 [Reserved]

§ 270.23 Specific Part B information requirements for miscellaneous units.

Except as otherwise provided in § 264.600, owners and operators of facilities that treat, store, or dispose of hazardous waste in miscellaneous units must provide the following additional information:

(a) A detailed description of the unit being used or proposed for use, including the following:

(1) Physical characteristics, materials of construction, and dimensions of the unit;

(2) Detailed plans and engineering reports describing how the unit will be located, designed, constructed, operated, maintained, monitored, inspected, and closed to comply with the requirements of §§ 264.601 and 264.602; and

(3) For disposal units, a detailed description of the plans to comply with the post-closure requirements of § 264.603.

(b) Detailed hydrologic, geologic, and meteorologic assessments and land-use maps for the region surrounding the site that address and ensure compliance of the unit with each factor in the environmental performance standards of § 264.601. If the applicant can demonstrate that he does not violate the environmental performance standards of § 264.601 and the Director agrees with such demonstration, preliminary hydrologic, geologic, and meteorologic assessments will suffice.

(c) Information on the potential pathways of exposure of humans or environmental receptors to hazardous waste or hazardous constituents and on the potential magnitude and nature of such exposures.

(d) For any treatment unit, a report on a demonstration of the effectiveness of the treatment based on laboratory or field data.

(e) Any additional information determined by the Director to be necessary for evaluation of compliance of the unit with the environmental performance standards of § 264.601.

(Information collection requirements in this section have been approved by the Office of Management and Budget under control number 2050-0074)

Subpart C—Permit Conditions

§ 270.30 Conditions applicable to all permits.

The following conditions apply to all RCRA permits, and shall be incorporated into the permits either expressly or by reference. If incorporated by reference, a specific citation to these regulations (or the corresponding approved State regulations) must be given in the permit.

(a) *Duty to comply.* The permittee must comply with all conditions of this permit, except that the permittee need not comply with the conditions of this permit to the extent and for the duration such noncompliance is authorized in an emergency permit. (See § 270.61). Any permit noncompliance, except under the terms of an emergency permit, constitutes a violation of the appropriate Act and is grounds for enforcement action; for permit termination, revocation and reissuance, or modification; or for denial of a permit renewal application.

(b) *Duty to reapply.* If the permittee wishes to continue an activity regulated by this permit after the expiration date of this permit, the permittee must apply for and obtain a new permit.

(c) *Need to halt or reduce activity not a defense.* It shall not be a defense for a permittee in an enforcement

(iii) Linear dimension of incinerator unit including cross sectional area of combustion chamber.

(iv) Decription of auxiliary fuel system (type/feed).

(v) Capacity of prime mover.

(vi) Description of automatic waste feed cutoff system(s).

(vii) Stack gas monitoring and pollution control monitoring system.

(viii) Nozzle and burner design.

(ix) Construction materials.

(x) Location and description of temperature, pressure, and flow indicating devices and control devices.

(3) A description and analysis of the waste to be burned compared with the waste for which data from operational or trial burns are provided to support the contention that a trial burn is not needed. The data should include those items listed in paragraph (c)(1) of this section. This analysis should specify the POHC's which the applicant has idenitified in the waste for which a permit is sought, and any differeneces from the POHC's in the waste for which burn data are provided.

(4) The design and operating conditions of the incinerator unit to be used, compared with that for which comparative burn data are available.

(5) A description of the results submitted from any previously conducted trial burn(s) including:

(i) Sampling and analysis techniques used to calculate performance standards in § 264.343 of this chapter,

(ii) Methods and results of monitoring temperatures, waste feed rates, carbon monoxide, and an appropriate indicator of combustion gas velocity (including a statement concerning the precision and accuracy of this measurement),

(6) The expected incinerator operation information to demonstrate compliance with §§ 264.343 and 264.345 of this chapter including:

(i) Expected carbon monoxide (CO) level in the stack exhaust gas.

(ii) Waste feed rate.

(iii) Combustion zone temperature.

(iv) Indication of combustion gas velocity.

(v) Expected stack gas volume, flow rate, and temperature.

(vi) Computed residence time for was[illegible] the combustion zone.

(vii) Expected hydrochloric acid removal efficiency.

(viii) Expected fugitive emissions and their control procedures.

(ix) Proposed waste feed cut-off limits based on the identified significant operating parameters.

(7) Such supplemental information as the Director finds necessary to achieve the purposes of this paragraph.

(8) Waste analysis data, including that submitted in paragraph (c)(1) of this section, sufficient to allow the Director to specify as permit Principal Organic Hazardous Constituents (permit POHC's) those constituents for which destruction and removal efficiencies will be required.

(d) The Director shall approve a permit application without a trial burn if he finds that:

(1) The wastes are sufficiently similar; and

(2) The incinerator units are sufficiently similar, and the data from other trial burns are adequate to specify (under § 264.345 of this chapter) operating conditions that will ensure that the performance standards in § 264.343 of this chapter will be met by the incinerator.

§ 270.20 Specific Part B information requirements for land treatment facilities.

Except as otherwise provided in § 264.1, owners and operators of facilities that use land treatment to dispose of hazardous waste must provide the following additional information:

(a) A description of plans to conduct a treatment demonstration as required under § 264.272. The description must include the following information;

(1) The wastes for which the demonstration will be made and the potential hazardous constituents in the waste;

(2) The data sources to be used to make the demonstration (*e.g.*, literature, laboratory data, field data, or operating data);

(3) Any specific laboratory or field test that will be conducted, including:

(i) The type of test (*e.g.*, column leaching, degradation);

(ii) Materials and methods, including analytical procedures;

(iii) Expected time for completion;

(iv) Characteristics of the unit that will be simulated in the demonstration, including treatment zone characteristics, climatic conditions, and operating practices.

(b) A description of a land treatment program, as required under § 264.271. This information must be submitted with the plans for the treatment demonstration, and updated following the treatment demonstration. The land treatment program must address the following items:

(1) The wastes to be land treated;

(2) Design measures and operating practices necessary to maximize treatment in accordance with § 264.273(a) including:

(i) Waste application method and rate;

(ii) Measures to control soil pH;

(iii) Enhancement of microbial or chemical reactions;

(iv) Control of moisture content;

(3) Provisions for unsaturated zone monitoring, including:

(i) Sampling equipment, procedures, and frequency;

(ii) Procedures for selecting sampling locations;

(iii) Analytical procedures;

(iv) Chain of custody control;

(v) Procedures for establishing background values;

(vi) Statistical methods for interpreting results;

(vii) The justification for any hazardous constituents recommended for selection as principal hazardous constituents, in accordance with the criteria for such selection in § 264.278(a);

(4) A list of hazardous constituents reasonably expected to be in, or derived from, the wastes to be land treated based on waste analysis performed pursuant to § 264.13;

(5) The proposed dimensions of the treatment zone;

(c) A description of how the unit is or will be designed, constructed, operated, and maintained in order to meet the requirements of § 264.273. This submission must address the following items:

(1) Control of run-on;

(2) Collection and control of run-off;

(3) Minimization of run-off of hazardous constituents from the treatment zone;

(4) Management of collection and holding facilities associated with run-on and run-off control systems;

(5) Periodic inspection of the unit. This information should be included in the inspection plan submitted under § 270.14(b)(5);

(6) Control of wind dispersal of particulate matter, if applicable;

(d) If food-chain crops are to be grown in or on the treatment zone of the land treatment unit, a description of how the demonstration required under § 264.276(a) will be conducted including:

(1) Characteristics of the food-chain crop for which the demonstration will be made.

(2) Characteristics of the waste, treatment zone, and waste application method and rate to be used in the demonstration;

(3) Procedures for crop growth, sample collection, sample analysis, and data evaluation;

(4) Characteristics of the comparison crop including the location and conditions under which it was or will be grown;

(e) If food-chain crops are to be grown, and cadmium is present in the land-treated waste, a description of how the requirements of § 264.276(b) will be complied with;

(f) A description of the vegetative cover to be applied to closed portions of the facility, and a plan for maintaining such cover during the post-closure care period, as required under § 264.280(a)(8) and § 264.280(c)(2). This information should be included in the closure plan and, where applicable, the post-closure care plan submitted under § 270.14(b)(13);

(g) If ignitable or reactive wastes will be placed in or on the treatment zone, an explanation of how the requirements of § 264.281 will be complied with;

(h) If incompatible wastes, or incompatible wastes and materials, will be placed in or on the same treatment zone, an explanation of how § 264.282 will be complied with.

(i) A waste management plan for EPA Hazardous W[illegible] Nos. FO20,

owner or operator a detailed written statement of reasons.

(11) The Regional Administrator will agree to termination of the trust when:

(i) An owner or operator substitutes alternate financial assurance as specified in this section; or

(ii) The Regional Administrator releases the owner or operator from the requirements of this section in accordance with § 265.143(h).

(b) *Surety bond guaranteeing payment into a closure trust fund.* (1) An owner or operator may satisfy the requirements of this section by obtaining a surety bond which conforms to the requirements of this paragraph and submitting the bond to the Regional Administrator. The surety company issuing the bond must, at a minimum, be among those listed as acceptable sureties on Federal bonds in Circular 570 of the U.S. Department of the Treasury.

(2) The wording of the surety bond must be identical to the wording specified in § 264.151(b).

(3) The owner or operator who uses a surety bond to satisfy the requirements of this section must also establish a standby trust fund. Under the terms of the bond, all payments made thereunder will be deposited by the surety directly into the standby trust fund in accordance with instructions from the Regional Administrator. This standby trust fund must meet the requirements specified in § 265.143(a), except that:

(i) An originally signed duplicate of the trust agreement must be submitted to the Regional Administrator with the surety bond; and

(ii) Until the standby trust fund is funded pursuant to the requirements of this section, the following are not required by these regulations:

(A) Payments into the trust fund as specified in § 265.143(a);

(B) Updating of Schedule A of the trust agreement (see § 264.151(a)) to show current closure cost estimates;

(C) Annual valuations as required by the trust agreement; and

(D) Notices of nonpayment as required by the trust agreement.

(4) The bond must guarantee that the owner or operator will:

(i) Fund the standby trust fund in an amount equal to the penal sum of the bond before the beginning of final closure of the facility; or

(ii) Fund the standby trust fund in an amount equal to the penal sum within 15 days after an administrative order to begin final closure issued by the Regional Administrator becomes final, or within 15 days after an order to begin final closure is issued by a U.S. district court or other court of competent jurisdiction; or

(iii) Provide alternate financial assurance as specified in this section, and obtain the Regional Administrator's written approval of the assurance provided, within 90 days after receipt by both the owner or operator and the Regional Administrator of a notice of cancellation of the bond from the surety.

(5) Under the terms of the bond, the surety will become liable on the bond obligation when the owner or operator fails to perform as guaranteed by the bond.

(6) The penal sum of the bond must be in an amount at least equal to the current closure cost estimate, except as provided in § 265.143(f).

(7) Whenever the current closure cost estimate increases to an amount greater than the penal sum, the owner or operator, within 60 days after the increase, must either cause the penal sum to be increased to an amount at least equal to the current closure cost estimate and submit evidence of such increase to the Regional Administrator, or obtain other financial assurance as specified in this section to cover the increase. Whenever the current closure cost estimate decreases, the penal sum may be reduced to the amount of the current closure cost estimate following written approval by the Regional Administrator.

(8) Under the terms of the bond, the surety may cancel the bond by sending notice of cancellation by certified mail to the owner or operator and to the Regional Administrator. Cancellation may not occur, however, during the 120 days beginning on the date of receipt of the notice of cancellation by both the owner or operator and the Regional Administrator, as evidenced by the return receipts.

(9) The owner or operator may cancel the bond if the Regional Administrator has given prior written consent based on his receipt of evidence of alternate financial assurance as specified in this section.

(c) *Closure letter of credit.* (1) An owner or operator may satisfy the requirements of this section by obtaining an irrevocable standby letter of credit which conforms to the requirements of this paragraph and submitting the letter to the Regional Administrator. The issuing institution must be an entity which has the authority to issue letters of credit and whose letter-of-credit operations are regulated and examined by a Federal or State agency.

(2) The wording of the letter of credit must be identical to the wording specified in § 264.151(d).

(3) An owner or operator who uses a letter of credit to satisfy the requirements of this section must also establish a standby trust fund. Under the terms of the letter of credit, all amounts paid pursuant to a draft by the Regional Administrator will be deposited by the issuing institution directly into the standby trust fund in accordance with instructions from the Regional Administrator. This standby trust fund must meet the requirements of the trust fund specified in § 265.143(a), except that:

(i) An originally signed duplicate of the trust agreement must be submitted to the Regional Administrator with the letter of credit; and

(ii) Unless the standby trust fund is funded pursuant to the requirements of this section, the following are not required by these regulations:

(A) Payments into the trust fund as specified in § 265.143(a);

(B) Updating of Schedule A of the trust agreement (see § 264.151(a)) to show current closure cost estimates;

(C) Annual valuations as required by the trust agreement; and

(D) Notices of nonpayment as required by the trust agreement.

(4) The letter of credit must be accompanied by a letter from the owner or operator referring to the letter of credit by number, issuing institution, and date, and providing the following information: The EPA Identification Number, name, and address of the facility, and the amount of funds assured for closure of the facility by the letter of credit.

(5) The letter of credit must be irrevocable and issued for a period of at least 1 year. The letter of credit must provide that the expiration date will be automatically extended for a period of at least 1 year unless, at least 120 days before the current expiration date, the issuing institution notifies both the owner or operator and the Regional Administrator by certified mail of a decision not to extend the expiration date. Under the terms of the letter of credit, the 120 days will begin on the date when both the owner or operator and the Regional Administrator have received the notice, as evidenced by the return receipts.

(6) The letter of credit must be issued in an amount at least equal to the current closure cost estimate, except as provided in § 265.143(f).

(7) Whenever the current closure cost estimate increases to an amount greater than the amount of the credit, the owner or operator, within 60 days after the increase, must either cause the amount of the credit to be increased so that it at least equals the current closure cost estimate and submit evidence of such increase to the Regional Administrator, or obtain other financial assurance as specified in this section to cover the increase. Whenever the current closure cost estimate decreases, the amount of the credit may be reduced to the amount of the current closure cost estimate following written approval by the Regional Administrator.

(8) Following a final administrative determination pursuant to section 3008 of RCRA that the owner or operator has failed to perform final closure in accordance with the approved closure plan when required to do so, the Regional Administrator may draw on the letter of credit.

(9) If the owner or operator does not establish alternate financial assurance as specified in this section and obtain written approval of such alternate assurance from the Regional Administrator within 90 days after receipt by both the owner or operator and the

(4) The owner or operator may not incorporate a zero cost for hazardous waste that might have economic value.

(b) During the active life of the facility, the owner or operator must adjust the closure cost estimate for inflation within 60 days prior to the anniversary date of the establishment of the financial instrument(s) used to comply with § 265.143. For owners and operators using the financial test or corporate guarantee, the closure cost estimate must be updated for inflation within 30 days after the close of the firm's fiscal year and before submission of updated information to the Regional Administrator as specified in § 265.143(e)(3). The adjustment may be made by recalculating the closure cost estimate in current dollars, or by using an inflation factor derived from the most recent Implicit Price Deflator for Gross National Product published by the U.S. Department of Commerce in its *Survey of Current Business*, as specified in paragraphs (b)(1) and (2) of this section. The inflation factor is the result of dividing the latest published annual Deflator by the Deflator for the previous year.

(1) The first adjustment is made by multiplying the closure cost estimate by the inflation factor. The result is the adjusted closure cost estimate.

(2) Subsequent adjustments are made by multiplying the latest adjusted closure cost estimate by the latest inflation factor.

(c) During the active life of the facility, the owner or operator must revise the closure cost estimate no later than 30 days after a revision has been made to the closure plan which increases the cost of closure. If the owner or operator has an approved closure plan, the closure cost estimate must be revised no later than 30 days after the Regional Administrator has approved the request to modify the closure plan, if the change in the closure plan increases the cost of closure. The revised closure cost estimate must be adjusted for inflation as specified in § 265.142(b).

(d) The owner or operator must keep the following at the facility during the operating life of the facility: The latest closure cost estimate prepared in accordance with §§ 265.142 (a) and (c) and, when this estimate has been adjusted in accordance with § 265.142(b), the latest adjusted closure cost estimate.

(Approved by the Office of Management and Budget under control number 2050-0036)

[47 FR 15064, Apr. 7, 1982, as amended at 50 FR 4514, Jan. 31, 1985; 51 FR 16456, May 2, 1986]

§ 265.143 Financial assurance for closure.

By the effective date of these regulations, an owner or operator of each facility must establish financial assurance for closure of the facility. He must choose from the options as specified in paragraphs (a) through (e) of this section.

(a) *Closure trust fund.* (1) An owner or operator may satisfy the requirements of this section by establishing a closure trust fund which conforms to the requirements of this paragraph and submitting an originally signed duplicate of the trust agreement to the Regional Administrator. The trustee must be an entity which has the authority to act as a trustee and whose trust operations are regulated and examined by a Federal or State agency.

(2) The wording of the trust agreement must be identical to the wording specified in § 264.151(a)(1), and the trust agreement must be accompanied by a formal certification of acknowledgment (for example, see § 264.151(a)(2)). Schedule A of the trust agreement must be updated within 60 days after a change in the amount of the current closure cost estimate covered by the agreement.

(3) Payments into the trust fund must be made annually by the owner or operator over the 20 years beginning with the effective date of these regulations or over the remaining operating life of the facility as estimated in the closure plan, whichever period is shorter; this period is hereafter referred to as the "pay-in period." The payments into the closure trust fund must be made as follows:

(i) The first payment must be made by the effective date of these regulations, except as provided in paragraph (a)(5) of this section. The first payment must be at least equal to the current closure cost estimate, except as provided in § 265.143(f), divided by the number of years in the pay-in period.

(ii) Subsequent payments must be made no later than 30 days after each anniversary date of the first payment. The amount of each subsequent payment must be determined by this formula:

$$\text{Next payment} = \frac{CE - CV}{Y}$$

where CE is the current closure cost estimate, CV is the current value of the trust fund, and Y is the number of years remaining in the pay-in period.

(4) The owner or operator may accelerate payments into the trust fund or he may deposit the full amount of the current closure cost estimate at the time the fund is established. However, he must maintain the value of the fund at no less than the value that the fund would have if annual payments were made as specified in paragraph (a)(3) of this section.

(5) If the owner or operator establishes a closure trust fund after having used one or more alternate mechanisms specified in this section, his first payment must be in at least the amount that the fund would contain if the trust fund were established initially and annual payments made as specified in paragraph (a)(3) of this section.

(6) After the pay-in period is completed, whenever the current closure cost estimate changes, the owner or operator must compare the new estimate with the trustee's most recent annual valuation of the trust fund. If the value of the fund is less than the amount of the new estimate, the owner or operator, within 60 days after the change in the cost estimate, must either deposit an amount into the fund so that its value after this deposit at least equals the amount of the current closure cost estimate, or obtain other financial assurance as specified in this section to cover the difference.

(7) If the value of the trust fund is greater than the total amount of the current closure cost estimate, the owner or operator may submit a written request to the Regional Administrator for release of the amount in excess of the current closure cost estimate.

(8) If an owner or operator substitutes other financial assurance as specified in this section for all or part of the trust fund, he may submit a written request to the Regional Administrator for release of the amount in excess of the current closure cost estimate covered by the trust fund.

(9) Within 60 days after receiving a request from the owner or operator for release of funds as specified in paragraph (a) (7) or (8) of this section, the Regional Administrator will instruct the trustee to release to the owner or operator such funds as the Regional Administrator specifies in writing.

(10) After beginning partial or final closure, an owner or operator or another person authorized to conduct partial or final closure may request reimbursements for partial or final closure expenditures by submitting itemized bills to the Regional Administrator. The owner or operator may request reimbursements for partial closure only if sufficient funds are remaining in the trust fund to cover the maximum costs of closing the facility over its remaining operating life. No later than 60 days after receiving bills for partial or final closure activities, the Regional Administrator will instruct the trustee to make reimbursements in those amounts as the Regional Administrator specifies in writing, if the Regional Administrator determines that the partial or final closure expenditures are in accordance with the approved closure plan, or otherwise justified. If the Regional Administrator has reason to believe that the maximum cost of closure over the remaining life of the facility will be significantly greater than the value of the trust fund, he may withhold reimbursements of such amounts as he deems prudent until he determines, in accordance with § 265.143(h) that the owner or operator is no longer required to maintain financial assurance for final closure of the facility. If the Regional Administrator does not instruct the trustee to make such reimbursements, he will provide to the

(D) Assets located in the United States amounting to at least 90 percent of total assets or at least six times the sum of the current closure and post-closure cost estimates and the current plugging and abandonment cost estimates.

(ii) The owner or operator must have:

(A) A current rating for his most recent bond issuance of AAA, AA, A, or BBB as issued by Standard and Poor's or Aaa, Aa, A, or Baa as issued by Moody's; and

(B) Tangible net worth at least six times the sum of the current closure and post-closure cost estimates and the current plugging and abandonment cost estimates; and

(C) Tangible net worth of at least $10 million; and

(D) Assets located in the United States amounting to at least 90 percent of total assets or at least six times the sum of the current closure and post-closure cost estimates and the current plugging and abandonment cost estimates.

(2) The phrase "current closure and post-closure cost estimates" as used in paragraph (e)(1) of this section refers to the cost estimates required to be shown in paragraphs 1-4 of the letter from the owner's or operator's chief financial officer (§ 264.151(f)). The phrase "current plugging and abandonment cost estimates" as used in paragraph (e)(1) of this section refers to the cost estimates required to be shown in paragraphs 1-4 of the letter from the owner's or operator's chief financial officer (§ 144.70(f) of this title).

(3) To demonstrate that he meets this test, the owner or operator must submit the following items to the Regional Administrator:

(i) A letter signed by the owner's or operator's chief financial officer and worded as specified in § 264.151(f); and

(ii) A copy of the independent certified public accountant's report on examination of the owner's or operator's financial statements for the latest completed fiscal year; and

(iii) A special report from the owner's or operator's independent certified public accountant to the owner or operator stating that:

(A) He has compared the data which the letter from the chief financial officer specifies as having been derived from the independently audited, year-end financial statements for the latest fiscal year with the amounts in such financial statements; and

(B) In connection with that procedure, no matters came to his attention which caused him to believe that the specified data should be adjusted.

(4) The owner or operator may obtain an extension of the time allowed for submission of the documents specified in paragraph (e)(3) of this section if the fiscal year of the owner or operator ends during the 90 days prior to the effective date of these regulations and if the year-end financial statements for that fiscal year will be audited by an independent certified public accountant. The extension will end no later than 90 days after the end of the owner's or operator's fiscal year. To obtain the extension, the owner's or operator's chief financial officer must send, by the effective date of these regulations, a letter to the Regional Administrator of each Region in which the owner's or operator's facilities to be covered by the financial test are located. This letter from the chief financial officer must:

(i) Request the extension;

(ii) Certify that he has grounds to believe that the owner or operator meets the criteria of the financial test;

(iii) Specify for each facility to be covered by the test the EPA Identification Number, name, address, and current closure and post-closure cost estimates to be covered by the test;

(iv) Specify the date ending the owner's or operator's last complete fiscal year before the effective date of these regulations;

(v) Specify the date, no later than 90 days after the end of such fiscal year, when he will submit the documents specified in paragraph (e)(3) of this section; and

(vi) Certify that the year-end financial statements of the owner or operator for such fiscal year will be audited by an independent certified public accountant.

(5) After the initial submission of items specified in paragraph (e)(3) of this section, the owner or operator must send updated information to the Regional Administrator within 90 days after the close of each succeeding fiscal year. This information must consist of all three items specified in paragraph (e)(3) of this section.

(6) If the owner or operator no longer meets the requirements of paragraph (e)(1) of this section, he must send notice to the Regional Administrator of intent to establish alternate financial assurance as specified in this section. The notice must be sent by certified mail within 90 days after the end of the fiscal year for which the year-end financial data show that the owner or operator no longer meets the requirements. The owner or operator must provide the alternate financial assurance within 120 days after the end of such fiscal year.

(7) The Regional Administrator may, based on a reasonable belief that the owner or operator may no longer meet the requirements of paragraph (e)(1) of this section, require reports of financial condition at any time from the owner or operator in addition to those specified in paragraph (e)(3) of this section. If the Regional Administrator finds, on the basis of such reports or other information, that the owner or operator no longer meets the requirements of paragraph (e)(1) of this section, the owner or operator must provide alternate financial assurance as specified in this section within 30 days after notification of such a finding.

(8) The Regional Administrator may disallow use of this test on the basis of qualifications in the opinion expressed by the independent certified public accountant in his report on examination of the owner's or operator's financial statements (see paragraph (e)(3)(ii) of this section). An adverse opinion or a disclaimer of opinion will be cause for disallowance. The Regional Administrator will evaluate other qualifications on an individual basis. The owner or operator must provide alternate financial assurance as specified in this section within 30 days after notification of the disallowance.

(9) The owner or operator is no longer required to submit the items specified in paragraph (e)(3) of this section when:

(i) An owner or operator substitutes alternate financial assurance as specified in this section; or

(ii) The Regional Administrator releases the owner or operator from the requirements of this section in accordance with § 265.143(h).

(10) An owner or operator may meet the requirements of this section by obtaining a written guarantee, hereafter referred to as "corporate guarantee." The guarantor must be the parent corporation of the owner or operator. The guarantor must meet the requirements for owners or operators in paragraphs (e)(1) through (8) of this section and must comply with the terms of the corporate guarantee. The wording of the corporate guarantee must be identical to the wording specified in § 264.151(h). The corporate guarantee must accompany the items sent to the Regional Administrator as specified in paragraph (e)(3) of this section. The terms of the corporate guarantee must provide that:

(i) If the owner or operator fails to perform final closure of a facility covered by the corporate guarantee in accordance with the closure plan and other interim status requirements whenever required to do so, the guarantor will do so or establish a trust fund as specified in § 265.143(a) in the name of the owner or operator.

(ii) The corporate guarantee will remain in force unless the guarantor sends notice of cancellation by certified mail to the owner or operator and to the Regional Administrator. Cancellation may not occur, however, during the 120 days beginning on the date of receipt of the notice of cancellation by both the owner or operator and the Regional Administrator, as evidenced by the return receipts.

(iii) If the owner or operator fails to provide alternate financial assurance as specified in this section and obtain the written approval of such alternate assurance from the Regional Administrator within 90 days after receipt by both the owner or operator and the Regional Administrator of a notice of cancellation of the corporate guarantee from the guarantor, the guarantor will provide such alternate financial assurance in the name of the owner or operator.

Regional Administrator of a notice from the issuing institution that it has decided not to extend the letter of credit beyond the current expiration date, the Regional Administrator will draw on the letter of credit. The Regional Administrator may delay the drawing if the issuing institution grants an extension of the term of the credit. During the last 30 days of any such extension the Regional Administrator will draw on the letter of credit if the owner or operator has failed to provide alternate financial assurance as specified in this section and obtain written approval of such assurance from the Regional Administrator.

(10) The Regional Administrator will return the letter of credit to the issuing institution for termination when:

(i) An owner or operator substitutes alternate financial assurance as specified in this section; or

(ii) The Regional Administrator releases the owner or operator from the requirements of this section in accordance with § 265.143(h).

(d) *Closure insurance.* (1) An owner or operator may satisfy the requirements of this section by obtaining closure insurance which conforms to the requirements of this paragraph and submitting a certificate of such insurance to the Regional Administrator. By the effective date of these regulations the owner or operator must submit to the Regional Administrator a letter from an insurer stating that the insurer is considering issuance of closure insurance conforming to the requirements of this paragraph to the owner or operator. Within 90 days after the effective date of these regulations, the owner or operator must submit the certificate of insurance to the Regional Administrator or establish other financial assurance as specified in this section. At a minimum, the insurer must be licensed to transact the business of insurance, or eligible to provide insurance as an excess or surplus lines insurer, in one or more States.

(2) The wording of the certificate of insurance must be identical to the wording specified in § 264.151(e).

(3) The closure insurance policy must be issued for a face amount at least equal to the current closure cost estimate, except as provided in § 265.143(f). The term "face amount" means the total amount the insurer is obligated to pay under the policy. Actual payments by the insurer will not change the face amount, although the insurer's future liability will be lowered by the amount of the payments.

(4) The closure insurance policy must guarantee that funds will be available to close the facility whenever final closure occurs. The policy must also guarantee that once final closure begins, the insurer will be responsible for paying out funds, up to an amount equal to the face amount of the policy, upon the direction of the Regional Administrator, to such party or parties as the Regional Administrator specifies.

(5) After beginning partial or final closure, an owner or operator or any other person authorized to conduct closure may request reimbursements for closure expenditures by submitting itemized bills to the Regional Administrator. The owner or operator may request reimbursements for partial closure only if the remaining value of the policy is sufficient to cover the maximum costs of closing the facility over its remaining operating life. Within 60 days after receiving bills for closure activities, the Regional Administrator will instruct the insurer to make reimbursements in such amounts as the Regional Administrator specifies in writing if the Regional Administrator determines that the partial or final closure expenditures are in accordance with the approved closure plan or otherwise justified. If the Regional Administrator has reason to believe that the maximum cost of closure over the remaining life of the facility will be significantly greater than the face amount of the policy, he may withhold reimbursement of such amounts as he deems prudent until he determines, in accordance with § 265.143(h), that the owner or operator is no longer required to maintain financial assurance for final closure of the particular facility. If the Regional Administrator does not instruct the insurer to make such reimbursements, he will provide to the owner or operator a detailed written statement of reasons.

(6) The owner or operator must maintain the policy in full force and effect until the Regional Administrator consents to termination of the policy by the owner or operator as specified in paragraph (d)(10) of this section. Failure to pay the premium, without substitution of alternate financial assurance as specified in this section, will constitute a significant violation of these regulations, warranting such remedy as the Regional Administrator deems necessary. Such violation will be deemed to begin upon receipt by the Regional Administrator of a notice of future cancellation, termination, or failure to renew due to nonpayment of the premium, rather than upon the date of expiration.

(7) Each policy must contain a provision allowing assignment of the policy to a successor owner or operator. Such assignment may be conditional upon consent of the insurer, provided such consent is not unreasonably refused.

(8) The policy must provide that the insurer may not cancel, terminate, or fail to renew the policy except for failure to pay the premium. The automatic renewal of the policy must, at a minimum, provide the insured with the option of renewal at the face amount of the expiring policy. If there is a failure to pay the premium, the insurer may elect to cancel, terminate, or fail to renew the policy by sending notice by certified mail to the owner or operator and the Regional Administrator. Cancellation, termination, or failure to renew may not occur, however, during the 120 days beginning with the date of receipt of the notice by both the Regional Administrator and the owner or operator, as evidenced by the return receipts. Cancellation, termination, or failure to renew may not occur and the policy will remain in full force and effect in the event that on or before the date of expiration:

(i) The Regional Administrator deems the facility abandoned; or

(ii) Interim status is terminated or revoked; or

(iii) Closure is ordered by the Regional Administrator or a U.S. district court or other court of competent jurisdiction; or

(iv) The owner or operator is named as debtor in a voluntary or involuntary proceeding under Title 11 (Bankruptcy), U.S. Code; or

(v) The premium due is paid.

(9) Whenever the current closure cost estimate increases to an amount greater than the face amount of the policy, the owner or operator, within 60 days after the increase, must either cause the face amount to be increased to an amount at least equal to the current closure cost estimate and submit evidence of such increase to the Regional Administrator, or obtain other financial assurance as specified in this section to cover the increase. Whenever the current closure cost estimate decreases, the face amount may be reduced to the amount of the current closure cost estimate following written approval by the Regional Administrator.

(10) The Regional Administrator will give written consent to the owner or operator that he may terminate the insurance policy when:

(i) An owner or operator substitutes alternate financial assurance as specified in this section; or

(ii) The Regional Administrator releases the owner or operator from the requirements of this section in accordance with § 265.143(h).

(e) *Financial test and corporate guarantee for closure.* (1) An owner or operator may satisfy the requirements of this section by demonstrating that he passes a financial test as specified in this paragraph. To pass this test the owner or operator must meet the criteria of either paragraph (e)(1)(i) or (ii) of this section:

(i) The owner or operator must have:

(A) Two of the following three ratios: A ratio of total liabilities to net worth less than 2.0; a ratio of the sum of net income plus depreciation, depletion, and amortization to total liabilities greater than 0.1; and a ratio of current assets to current liabilities greater than 1.5; and

(B) Net working capital and tangible net worth each at least six times the sum of the current closure and post-closure cost estimates and the current plugging and abandonment cost estimates; and

(C) Tangible net worth of at least $10 million; and

ment must be determined by this formula:

$$\text{Next payment} = \frac{CE - CV}{Y}$$

where CE is the current post-closure cost estimate, CV is the current value of the trust fund, and Y is the number of years remaining in the pay-in period.

(4) The owner or operator may accelerate payments into the trust fund or he may deposit the full amount of the current post-closure cost estimate at the time the fund is established. However, he must maintain the value of the fund at no less than the value that the fund would have if annual payments were made as specified in paragraph (a)(3) of this section.

(5) If the owner or operator establishes a post-closure trust fund after having used one or more alternate mechanisms specified in this section, his first payment must be in at least the amount that the fund would contain if the trust fund were established initially and annual payments made as specified in paragraph (a)(3) of this section.

(6) After the pay-in period is completed, whenever the current post-closure cost estimate changes during the operating life of the facility, the owner or operator must compare the new estimate with the trustee's most recent annual valuation of the trust fund. If the value of the fund is less than the amount of the new estimate, the owner or operator, within 60 days after the change in the cost estimate, must either deposit an amount into the fund so that its value after this deposit at least equals the amount of the current post-closure cost estimate, or obtain other financial assurance as specified in this section to cover the difference.

(7) During the operating life of the facility, if the value of the trust fund is greater than the total amount of the current post-closure cost estimate, the owner or operator may submit a written request to the Regional Administrator for release of the amount in excess of the current post-closure cost estimate.

(8) If an owner or operator substitutes other financial assurance as specified in this section for all or part of the trust fund, he may submit a written request to the Regional Administrator for release of the amount in excess of the current post-closure cost estimate covered by the trust fund.

(9) Within 60 days after receiving a request from the owner or operator for release of funds as specified in paragraph (a)(7) or (8) of this section, the Regional Administrator will instruct the trustee to release to the owner or operator such funds as the Regional Administrator specifies in writing.

(10) During the period of post-closure care, the Regional Administrator may approve a release of funds if the owner or operator demonstrates to the Regional Administrator that the value of the trust fund exceeds the remaining cost of post-closure care.

(11) An owner or operator or any other person authorized to conduct post-closure care may request reimbursements for post-closure expenditures by submitting itemized bills to the Regional Administrator. Within 60 days after receiving bills for post-closure care activities, the Regional Administrator will instruct the trustee to make reimbursements in those amounts as the Regional Administrator specifies in writing, if the Regional Administrator determines that the post-closure expenditures are in accordance with the approved post-closure plan or otherwise justified. If the Regional Administrator does not instruct the trustee to make such reimbursements, he will provide the owner or operator with a detailed written statement of reasons.

(12) The Regional Administrator will agree to termination of the trust when:

(i) An owner or operator substitutes alternate financial assurance as specified in this section; or

(ii) The Regional Administrator releases the owner or operator from the requirements of this section in accordance with § 265.145(h).

(b) *Surety bond guaranteeing payment into a post-closure trust fund.* (1) An owner or operator may satisfy the requirements of this section by obtaining a surety bond which conforms to the requirements of this paragraph and submitting the bond to the Regional Administrator. The surety company issuing the bond must, at a minimum, be among those listed as acceptable sureties on Federal bonds in Circular 570 of the U.S. Department of the Treasury.

(2) The wording of the surety bond must be identical to the wording specified in § 264.151(b).

(3) The owner or operator who uses a surety bond to satisfy the requirements of this section must also establish a standby trust fund. Under the terms of the bond, all payments made thereunder will be deposited by the surety directly into the standby trust fund in accordance with instructions from the Regional Administrator. This standby trust fund must meet the requirements specified in § 265.145(a), except that:

(i) An originally signed duplicate of the trust agreement must be submitted to the Regional Administrator with the surety bond; and

(ii) Until the standby trust fund is funded pursuant to the requirements of this section, the following are not required by these regulations:

(A) Payments into the trust fund as specified in § 265.145(a);

(B) Updating of Schedule A of the trust agreement (see § 264.151(a)) to show current post-closure cost estimates;

(C) Annual valuations as required by the trust agreement; and

(D) Notices of nonpayment as required by the trust agreement.

(4) The bond must guarantee that the owner or operator will:

(i) Fund the standby trust fund in an amount equal to the penal sum of the bond before the beginning of final closure of the facility; or

(ii) Fund the standby trust fund in an amount equal to the penal sum within 15 days after an administrative order to begin final closure issued by the Regional Administrator becomes final, or within 15 days after an order to begin final closure is issued by a U.S. district court or other court of competent jurisdiction; or

(iii) Provide alternate financial assurance as specified in this section, and obtain the Regional Administrator's written approval of the assurance provided, within 90 days after receipt by both the owner or operator and the Regional Administrator of a notice of cancellation of the bond from the surety.

(5) Under the terms of the bond, the surety will become liable on the bond obligation when the owner or operator fails to perform as guaranteed by the bond.

(6) The penal sum of the bond must be in an amount at least equal to the current post-closure cost estimate, except as provided in § 265.145(f).

(7) Whenever the current post-closure cost estimate increases to an amount greater than the penal sum, the owner or operator, within 60 days after the increase, must either cause the penal sum to be increased to an amount at least equal to the current post-closure cost estimate and submit evidence of such increase to the Regional Administrator, or obtain other financial assurance as specified in this section to cover the increase. Whenever the current post-closure cost estimate decreases, the penal sum may be reduced to the amount of the current post-closure cost estimate following written approval by the Regional Administrator.

(8) Under the terms of the bond, the surety may cancel the bond by sending notice of cancellation by certified mail to the owner or operator and to the Regional Administrator. Cancellation may not occur, however, during the 120 days beginning on the date of receipt of the notice of cancellation by both the owner or operator and the Regional Administrator, as evidenced by the return receipts.

(9) The owner or operator may cancel the bond if the Regional Administrator has given prior written consent based on his receipt of evidence of alternate financial assurance as specified in this section.

(c) *Post-closure letter of credit.* (1) An owner or operator may satisfy the requirements of this section by obtaining an irrevocable standby letter of credit which conforms to the requirements of this paragraph and submit-

(f) *Use of multiple financial mechanisms.* An owner or operator may satisfy the requirements of this section by establishing more than one financial mechanism per facility. These mechanisms are limited to trust funds, surety bonds, letters of credit, and insurance. The mechanisms must be as specified in paragraphs (a) through (d), respectively, of this section, except that it is the combination of mechanisms, rather than the single mechanism, which must provide financial assurance for an amount at least equal to the current closure cost estimate. If an owner or operator uses a trust fund in combination with a surety bond or a letter of credit, he may use the trust fund as the standby trust fund for the other mechanisms. A single standby trust fund may be established for two or more mechanisms. The Regional Administrator may use any or all of the mechanisms to provide for closure of the facility.

(g) *Use of a financial mechanism for multiple facilities.* An owner or operator may use a financial assurance mechanism specified in this section to meet the requirements of this section for more than one facility. Evidence of financial assurance submitted to the Regional Administrator must include a list showing, for each facility, the EPA Identification Number, name, address, and the amount of funds for closure assured by the mechanism. If the facilities covered by the mechanism are in more than one Region, identical evidence of financial assurance must be submitted to and maintained with the Regional Administrators of all such Regions. The amount of funds available through the mechanism must be no less than the sum of funds that would be available if a separate mechanism had been established and maintained for each facility. In directing funds available through the mechanism for closure of any of the facilities covered by the mechanism, the Regional Administrator may direct only the amount of funds designated for that facility, unless the owner or operator agrees to the use of additional funds available under the mechanism.

(h) *Release of the owner or operator from the requirements of this section.* Within 60 days after receiving certifications from the owner or operator and an independent registered professional engineer that final closure has been completed in accordance with the approved closure plan, the Regional Administrator will notify the owner or operator in writing that he is no longer required by this section to maintain financial assurance for final closure of the facility, unless the Regional Administrator has reason to believe that final closure has not been in accordance with the approved closure plan. The Regional Administrator shall provide the owner or operator a detailed written statement of any such reason to believe that closure has not been in accordance with the approved closure plan.

[47 FR 15064, Apr. 7, 1982, as amended at 51 FR 16456, May 2, 1986]

§ 265.144 Cost estimate for post-closure care.

(a) The owner or operator of a hazardous waste disposal unit must have a detailed written estimate, in current dollars, of the annual cost of post-closure monitoring and maintenance of the facility in accordance with the applicable post-closure regulations in §§ 265.117 through 265.120, 265.228, 265.258, 265.280, and 265.310.

(1) The post-closure cost estimate must be based on the costs to the owner or operator of hiring a third party to conduct post-closure care activities. A third party is a party who is neither a parent nor subsidiary of the owner or operator. (See definition of parent corporation in § 265.141(d).)

(2) The post-closure cost estimate is calculated by multiplying the annual post-closure cost estimate by the number of years of post-closure care required under § 265.117.

(b) During the active life of the facility, the owner or operator must adjust the post-closure cost estimate for inflation within 60 days prior to the anniversary date of the establishment of the financial instrument(s) used to comply with § 265.145. For owners or operators using the financial test or corporate guarantee, the post-closure care cost estimate must be updated for inflation no later than 30 days after the close of the firm's fiscal year and before submission of updated information to the Regional Administrator as specified in § 265.145(d)(5). The adjustment may be made by recalculating the post-closure cost estimate in current dollars or by using an inflation factor derived from the most recent Implicit Price Deflator for Gross National Product published by the U.S. Department of Commerce in its *Survey of Current Business* as specified in § 265.145 (b)(1) and (2). The inflation factor is the result of dividing the latest published annual Deflator by the Deflator for the previous year.

(1) The first adjustment is made by multiplying the post-closure cost estimate by the inflation factor. The result is the adjusted post-closure cost estimate.

(2) Subsequent adjustments are made by multiplying the latest adjusted post-closure cost estimate by the latest inflation factor.

(c) During the active life of the facility, the owner or operator must revise the post-closure cost estimate no later than 30 days after a revision to the post-closure plan which increases the cost of post-closure care. If the owner or operator has an approved post-closure plan, the post-closure cost estimate must be revised no later than 30 days after the Regional Administrator has approved the request to modify the plan, if the change in the post-closure plan increases the cost of post-closure care. The revised post-closure cost estimate must be adjusted for inflation as specified in § 265.144(b).

(d) The owner or operator must keep the following at the facility during the operating life of the facility: the latest post-closure cost estimate prepared in accordance with § 265.144 (a) and (c) and, when this estimate has been adjusted in accordance with § 265.144(b), the latest adjusted post-closure cost estimate.

(Approved by the Office of Management and Budget under control number 2050-0036)

[47 FR 15064, Apr. 7, 1982, as amended at 50 FR 4514, Jan. 31, 1985; 51 FR 16457, May 2, 1986]

§ 265.145 Financial assurance for post-closure care.

By the effective date of these regulations, an owner or operator of a facility with a hazardous waste disposal unit must establish financial assurance for post-closure care of the disposal unit(s).

(a) *Post-closure trust fund.* (1) An owner or operator may satisfy the requirements of this section by establishing a post-closure trust fund which conforms to the requirements of this paragraph and submitting an originally signed duplicate of the trust agreement to the Regional Administrator. The trustee must be an entity which has the authority to act as a trustee and whose trust operations are regulated and examined by a Federal or State agency.

(2) The wording of the trust agreement must be identical to the wording specified in § 264.151(a)(1), and the trust agreement must be accompanied by a formal certification of acknowledgment (for example, see § 264.151(a)(2)). Schedule A of the trust agreement must be updated within 60 days after a change in the amount of the current post-closure cost estimate covered by the agreement.

(3) Payments into the trust fund must be made annually by the owner or operator over the 20 years beginning with the effective date of these regulations or over the remaining operating life of the facility as estimated in the closure plan, whichever period is shorter; this period is hereafter referred to as the "pay-in period." The payments into the post-closure trust fund must be made as follows:

(i) The first payment must be made by the effective date of these regulations, except as provided in paragraph (a)(5) of this section. The first payment must be at least equal to the current post-closure cost estimate, except as provided in § 265.145(f), divided by the number of years in the pay-in period.

(ii) Subsequent payments must be made no later than 30 days after each anniversary date of the first payment. The amount of each subsequent pay-

nonpayment of the premium, rather than upon the date of expiration.

(7) Each policy most contain a provision allowing assignment of the policy to a successor owner or operator. Such assignment may be conditional upon consent of the insurer, provided such consent is not unreasonably refused.

(8) The policy must provide that the insurer may not cancel, terminate, or fail to renew the policy except for failure to pay the premium. The automatic renewal of the policy must, at a minimum, provide the insured with the option of renewal at the face amount of the expiring policy. If there is a failure to pay the premium, the insurer may elect to cancel, terminate, or fail to renew the policy by sending notice by certified mail to the owner or operator and the Regional Administrator. Cancellation, termination, or failure to renew may not occur, however, during the 120 days beginning with the date of receipt of the notice by both the Regional Administrator and the owner or operator, as evidenced by the return receipts. Cancellation, termination, or failure to renew may not occur and the policy will remain in full force and effect in the event that on or before the date of expiration:

(i) The Regional Administrator deems the facility abandoned; or

(ii) Interim status is terminated or revoked; or

(iii) Closure is ordered by the Regional Administrator or a U.S. district court or other court of competent jurisdiction; or

(iv) The owner or operator is named as debtor in a voluntary or involuntary proceeding under Title 11 (Bankruptcy), U.S. Code; or

(v) The premium due is paid.

(9) Whenever the current post-closure cost estimate increases to an amount greater than the face amount of the policy during the operating life of the facility, the owner or operator, within 60 days after the increase, must either cause the face amount to be increased to an amount at least equal to the current post-closure cost estimate and submit evidence of such increase to the Regional Administrator, or obtain other financial assurance as specified in this section to cover the increase. Whenever the current post-closure cost estimate decreases during the operating life of the facility, the face amount may be reduced to the amount of the current post-closure cost estimate following written approval by the Regional Administrator.

(10) Commencing on the date that liability to make payments pursuant to the policy accrues, the insurer will thereafter annually increase the face amount of the policy. Such increase must be equivalent to the face amounts of the policy, less any payments made, multiplied by an amount equivalent to 85 percent of the most recent investment rate or of the equivalent coupon-issue yield announced by the U.S. Treasury for 26-week Treasury securities.

(11) The Regional Administrator will give written consent to the owner or operator that he may terminate the insurance policy when:

(i) An owner or operator substitutes alternate financial assurance as specified in this section; or

(ii) The Regional Administrator releases the owner or operator from the requirements of this section in accordance with § 265.145(h).

(e) *Financial test and corporate guarantee for post-closure care.* (1) An owner or operator may satisfy the requirements of this section by demonstrating that he passes a financial test as specified in this paragraph. To pass this test the owner or operator must meet the criteria either of paragraph (e)(1)(i) or (ii) of this section:

(i) The owner or operator must have:

(A) Two of the following three ratios: a ratio of total liabilities to net worth less than 2.0; a ratio of the sum of net income plus depreciation, depletion, and amortization to total liabilities greater than 0.1; and a ratio of current assets to current liabilities greater than 1.5; and

(B) Net working capital and tangible net worth each at least six times the sum of the current closure and post-closure cost estimates and the current plugging and abandonment cost estimates; and

(C) Tangible net worth of at least $10 million; and

(D) Assets in the United States amounting to at least 90 percent of his total assets or at least six times the sum of the current closure and post-closure cost estimates and the current plugging and abandonment cost estimates.

(ii) The owner or operator must have:

(A) A current rating for his most recent bond issuance of AAA, AA, A, or BBB as issued by Standard and Poor's or Aaa, Aa, A, or Baa as issued by Moody's; and

(B) Tangible net worth at least six times the sum of the current closure and post-closure cost estimates and the current plugging and abandonment cost estimates; and

(C) Tangible net worth of at least $10 million; and

(D) Assets located in the United States amounting to at least 90 percent of his total assets or at least six times the sum of the current closure and post-closure cost estimates and the current plugging and abandonment cost estimates.

(2) The phrase "current closure and post-closure cost estimates" as used in paragraph (e)(1) of this section refers to the cost estimates required to be shown in paragraphs 1-4 of the letter from the owner's or operator's chief financial officer (§ 264.151(f)). The phrase "current plugging and abandonment cost estimates" as used in paragraph (e)(1) of this section refers to the cost estimates required to be shown in paragraphs 1-4 of the letter from the owner's or operator's chief financial officer (§ 144.70(f) of this title).

(3) To demonstrate that he meets this test, the owner or operator must submit the following items to the Regional Administrator:

(i) A letter signed by the owner's or operator's chief financial officer and worded as specified in § 264.151(f); and

(ii) A copy of the independent certified public accountant's report on examination of the owner's or operator's financial statements for the latest completed fiscal year; and

(iii) A special report from the owner's or operator's independent certified public accountant to the owner or operator stating that:

(A) He has compared the data which the letter from the chief financial officer specifies as having been derived from the independently audited, year-end financial statements for the latest fiscal year with the amounts in such financial statements; and

(B) In connection with that procedure, no matters came to his attention which caused him to believe that the specified data should be adjusted.

(4) The owner or operator may obtain an extension of the time allowed for submission of the documents specified in paragraph (e)(3) of this section if the fiscal year of the owner or operator ends during the 90 days prior to the effective date of these regulations and if the year-end financial statements for that fiscal year will be audited by an independent certified public accountant. The extension will end no later than 90 days after the end of the owner's or operator's fiscal year. To obtain the extension, the owner's or operator's chief financial officer must send, by the effective date of these regulations, a letter to the Regional Administrator of each Region in which the owner's or operator's facilities to be covered by the financial test are located. This letter from the chief financial officer must:

(i) Request the extension;

(ii) Certify that he has grounds to believe that the owner or operator meets the criteria of the financial test;

(iii) Specify for each facility to be covered by the test the EPA Identification Number, name, address, and the current closure and post-closure cost estimates to be covered by the test;

(iv) Specify the date ending the owner's or operator's latest complete fiscal year before the effective date of these regulations;

(v) Specify the date, no later than 90 days after the end of such fiscal year, when he will submit the documents specified in paragraph (e)(3) of this section; and

(vi) Certify that the year-end financial statements of the owner or operator for such fiscal year will be audited by an independent certified public accountant.

(5) After the initial submission of items specified in paragraph (e)(3) of this section, the owner or operator must send updated information to the Regional Administrator within 90 days after the close of each succeeding

ting the letter to the Regional Administrator. The issuing institution must be an entity which has the authority to issue letters of credit and whose letter-of-credit operations are regulated and examined by a Federal or State agency.

(2) The wording of the letter of credit must be identical to the wording specified in § 264.151(d).

(3) An owner or operator who uses a letter of credit to satisfy the requirements of this section must also establish a standby trust fund. Under the terms of the letter of credit, all amounts paid pursuant to a draft by the Regional Administrator will be deposited by the issuing institution directly into the standby trust fund in accordance with instructions from the Regional Administrator. This standby trust fund must meet the requirements of the trust fund specified in § 265.145(a), except that:

(i) An originally signed duplicate of the trust agreement must be submitted to the Regional Administrator with the letter of credit; and

(ii) Unless the standby trust fund is funded pursuant to the requirements of this section, the following are not required by these regulations:

(A) Payments into the trust fund as specified in § 265.145(a);

(B) Updating of Schedule A of the trust agreement (see § 264.151(a)) to show current post-closure cost estimates;

(C) Annual valuations as required by the trust agreement; and

(D) Notices of nonpayment as required by the trust agreement.

(4) The letter of credit must be accompanied by a letter from the owner or operator referring to the letter of credit by number, issuing institution, and date, and providing the following information: The EPA Identification Number, name, and address of the facility, and the amount of funds assured for post-closure care of the facility by the letter of credit.

(5) The letter of credit must be irrevocable and issued for a period of at least 1 year. The letter of credit must provide that the expiration date will be automatically extended for a period of at least 1 year unless, at least 120 days before the current expiration date, the issuing institution notifies both the owner or operator and the Regional Administrator by certified mail of a decision not to extend the expiration date. Under the terms of the letter of credit, the 120 days will begin on the date when both the owner or operator and the Regional Administrator have received the notice, as evidenced by the return receipts.

(6) The letter of credit must be issued in an amount at least equal to the current post-closure cost estimate, except as provided in § 265.145(f).

(7) Whenever the current post-closure cost estimate increases to an amount greater than the amount of the credit during the operating life of the facility, the owner or operator, within 60 days after the increase, must either cause the amount of the credit to be increased so that it at least equals the current post-closure cost estimate and submit evidence of such increase to the Regional Administrator, or obtain other financial assurance as specified in this section to cover the increase. Whenever the current post-closure cost estimate decreases during the operating life of the facility, the amount of the credit may be reduced to the amount of the current post-closure cost estimate following written approval by the Regional Administrator.

(8) During the period of post-closure care, the Regional Administrator may approve a decrease in the amount of the letter of credit if the owner or operator demonstrates to the Regional Administrator that the amount exceeds the remaining cost of post-closure care.

(9) Following a final administrative determination pursuant to section 3008 of RCRA that the owner or operator has failed to perform post-closure care in accordance with the approved post-closure plan and other permit requirements, the Regional Administrator may draw on the letter of credit.

(10) If the owner or operator does not establish alternate financial assurance as specified in this section and obtain written approval of such alternate assurance from the Regional Administrator within 90 days after receipt by both the owner or operator and the Regional Administrator of a notice from the issuing institution that it has decided not to extend the letter of credit beyond the current expiration date, the Regional Administrator will draw on the letter of credit. The Regional Administrator may delay the drawing if the issuing institution grants an extension of the term of the credit. During the last 30 days of any such extension the Regional Administrator will draw on the letter of credit if the owner or operator has failed to provide alternate financial assurance as specified in this section and obtain written approval of such assurance from the Regional Administrator.

(11) The Regional Administrator will return the letter of credit to the issuing institution for termination when:

(i) An owner or operator substitutes alternate financial assurance as specified in this section; or

(ii) The Regional Administrator releases the owner or operator from the requirements of this section in accordance with § 265.145(h).

(d) *Post-closure insurance.* (1) An owner or operator may satisfy the requirements of this section by obtaining post-closure insurance which conforms to the requirements of this paragraph and submitting a certificate of such insurance to the Regional Administrator. By the effective date of these regulations the owner or operator must submit to the Regional Administrator a letter from an insurer stating that the insurer is considering issuance of post-closure insurance conforming to the requirements of this paragraph to the owner or operator. Within 90 days after the effective date of these regulations, the owner or operator must submit the certificate of insurance to the Regional Administrator or establish other financial assurance as specified in this section. At a minimum, the insurer must be licensed to transact the business of insurance, or eligible to provide insurance as an excess or surplus lines insurer, in one or more States.

(2) The wording of the certificate of insurance must be identical to the wording specified in § 264.151(e).

(3) The post-closure insurance policy must be issued for a face amount at least equal to the current post-closure cost estimate, except as provided in § 265.145(f). The term "face amount" means the total amount the insurer is obligated to pay under the policy. Actual payments by the insurer will not change the face amount, although the insurer's future liability will be lowered by the amount of the payments.

(4) The post-closure insurance policy must guarantee that funds will be available to provide post-closure care of the facility whenever the post-closure period begins. The policy must also guarantee that once post-closure care begins the insurer will be responsible for paying out funds, up to an amount equal to the face amount of the policy, upon the direction of the Regional Administrator, to such party or parties as the Regional Administrator specifies.

(5) An owner or operator or any other person authorized to perform post-closure care may request reimbursement for post-closure care expenditures by submitting itemized bills to the Regional Administrator. Within 60 days after receiving bills for post-closure care activities, the Regional Administrator will instruct the insurer to make reimbursements in those amounts as the Regional Administrator specifies in writing, if the Regional Administrator determines that the post-closure expenditures are in accordance with the approved post-closure plan or otherwise justified. If the Regional Administrator does not instruct the insurer to make such reimbursements, he will provide a detailed written statement of reasons.

(6) The owner or operator must maintain the policy in full force and effect until the Regional Administrator consents to termination of the policy by the owner or operator as specified in paragraph (d)(11) of this section. Failure to pay the premium, without substitution of alternate financial assurance as specified in the section, will constitute a significant violation of these regulations, warranting such remedy as the Regional Administrator deems necessary. Such violation will be deemed to begin upon receipt by the Regional Administrator of a notice of future cancellation, termination, or failure to renew due to

of such facilities, must demonstrate financial responsibility for bodily injury and property damage to third parties caused by sudden accidental occurrences arising from operations of the facility or group of facilities. The owner or operator must have and maintain liability coverage for sudden accidental occurrences in the amount of at least $1 million per occurrence with an annual aggregate of at least $2 million, exclusive of legal defense costs. This liability coverage may be demonstrated in one of three ways, as specified in paragraphs (a)(1), (2), and (3) of this section:

(1) An owner or operator may demonstrate the required liability coverage by having liability insurance as specified in this paragraph.

(i) Each insurance policy must be amended by attachment of the Hazardous Waste Facility Liability Endorsement or evidenced by a Certificate of Liability Insurance. The wording of the endorsement must be identical to the wording specified in § 264.151(i). The wording of the certificate of insurance must be identical to the wording specified in § 264.151(j). The owner or operator must submit a signed duplicate original of the endorsement or the certificate of insurance to the Regional Administrator, or Regional Administrator if the facilities are located in more than one Region. If requested by a Regional Administrator, the owner or operator must provide a signed duplicate original of the insurance policy.

(ii) Each insurance policy must be issued by an insurer which, at a minimum, is licensed to transact the business of insurance, or eligible to provide insurance as an excess or surplus lines insurer, in one or more States.

(2) An owner or operator may meet the requirements of this section by passing a financial test or using the corporate guarantee for liability coverage as specified in paragraph (g) of this section.

(3) An owner or operator may demonstrate the required liability coverage through use of the financial test, insurance, the corporate guarantee, a combination of the financial test and insurance, or a combination of the corporate guarantee and insurance. The amounts of coverage demonstrated must total at least the minimum amounts required by this paragraph.

(b) *Coverage for nonsudden accidental occurrences.* An owner or operator of a surface impoundment, landfill, or land treatment facility which is used to manage hazardous waste, or a group of such facilities, must demonstrate financial responsibility for bodily damage and property damage to third parties caused by nonsudden accidental occurrences arising from operations of the facility or group of facilities. The owner or operator must have and maintain liability coverage for nonsudden accidental occurrences in the amount of at least $3 million per occurrence with an annual aggregate of at least $6 million, exclusive of legal defense costs. This liability coverage may be demonstrated in one of three ways, as specified in paragraphs (b)(1), (2), and (3) of this section:

(1) An owner or operator may demonstrate the required liability coverage by having liability insurance as specified in this paragraph.

(i) Each insurance policy must be amended by attachment of the Hazardous Waste Facility Liability Endorsement or evidenced by a Certificate of Liability Insurance. The wording of the endorsement must be identical to the wording specified in § 264.151(i). The wording of the certificate of insurance must be identical to the wording specified in § 264.151(j). The owner or operator must submit a signed duplicate original of the endorsement or the certificate of insurance to the Regional Administrator, or Regional Administrators if the facilities are located in more than one Region. If requested by a Regional Administrator, the owner or operator must provide a signed duplicate original of the insurance policy.

(ii) Each insurance policy must be issued by an insurer which, at a minimum, is licensed to transact the business of insurance, or eligible to provide insurance as an excess or surplus lines insurer, in one or more States.

(2) An owner or operator may meet the requirements of this section by passing a financial test or using the corporate guarantee for liability coverage as specified in paragraphs (f) and (g) of this section.

(3) An owner or operator may demonstrate the required liability coverage through use of the financial test, insurance, the corporate guarantee, a combination of the financial test and insurance, or a combination of the corporate guarantee and insurance. The amounts of coverage demonstrated must total at least the minimum amounts required by this paragraph.

(4) The required liability coverage for nonsudden accidental occurrences must be demonstrated by the dates listed below. The total sales or revenues of the owner or operator in all lines of business, in the fiscal year preceding the effective date of these regulations, will determine which of the dates applies. If the owner and operator of a facility are two different parties, or if there is more than one owner or operator, the sales or revenues of the owner or operator with the largest sales or revenues will determine the date by which the coverage must be demonstrated. The dates are as follows:

(i) For an owner or operator with sales or revenues totalling $10 million or more, 6 months after the effective date of these regulations.

(ii) For an owner or operator with sales or revenues greater than $5 million but less than $10 million, 18 months after the effective date of these regulations.

(iii) All other owners or operators, 30 months after the effective date of these regulations.

(5) By the date 6 months after the effective date of these regulations an owner or operator who is within either of the last two categories (paragraph (b)(4)(ii) or (iii) of this section) must, unless he has demonstrated liability coverage for nonsudden accidental occurrences, send a letter to the Regional Administrator stating the date by which he plans to establish such coverage.

(c) *Request for variance.* If an owner or operator can demonstrate to the satisfaction of the Regional Administrator that the levels of financial responsibility required by paragraph (a) or (b) of this section are not consistent with the degree and duration of risk associated with treatment, storage, or disposal at the facility or group of facilities, the owner or operator may obtain a variance from the Regional Administrator. The request for a variance must be submitted in writing to the Regional Administrator. If granted, the variance will take the form of an adjusted level of required liability coverage, such level to be based on the Regional Administrator's assessment of the degree and duration of risk associated with the ownership or operation of the facility or group of facilities. The Regional Administrator may require an owner or operator who requests a variance to provide such technical and engineering information as is deemed necessary by the Regional Administrator to determine a level of financial responsibility other than that required by paragraph (a) or (b) of this section. The Regional Administrator will process a variance request as if it were a permit modification request under § 270.41(a)(5) of this chapter and subject to the procedures of § 124.5 of this chapter. Notwithstanding any other provision, the Regional Administrator may hold a public hearing at his discretion or whenever he finds, on the basis of requests for a public hearing, a significant degree of pubic interest in a tentative decision to grant a variance.

(d) *Adjustments by the Regional Administrator.* If the Regional Administrator determines that the levels of financial responsibility required by paragraph (a) or (b) of this section are not consistent with the degree and duration of risk associated with treatment, storage, or disposal at the facility or group of facilities, the Regional Administrator may adjust the level of financial responsibility required under paragraph (a) or (b) of this section as may be necessary to protect human health and the environment. This adjusted level will be based on the Regional Administrator's assessment of the degree and duration of risk associated with the ownership or operation of the facility or group of facilities. In addition, if the Regional Administrator determines that there is a significant risk to human health and the environment from nonsudden accidental occurrences resulting from the oper-

fiscal year. This information must consist of all three items specified in paragraph (e)(3) of this section.

(6) If the owner or operator no longer meets the requirements of paragraph (e)(1) of this section, he must send notice to the Regional Administrator of intent to establish alternate financial assurance as specified in this section. The notice must be sent by certified mail within 90 days after the end of the fiscal year for which the year-end financial data show that the owner or operator no longer meets the requirements. The owner or operator must provide the alternate financial assurance within 120 days after the end of such fiscal year.

(7) The Regional Administrator may, based on a reasonable belief that the owner or operator may no longer meet the requirements of paragraph (e)(1) of this section, require reports of financial condition at any time from the owner or operator in addition to those specified in paragraph (e)(3) of this section. If the Regional Administrator finds, on the basis of such reports or other information, that the owner or operator no longer meets the requirements of paragraph (e)(1) of this section, the owner or operator must provide alternate financial assurance as specified in this section within 30 days after notification of such a finding.

(8) The Regional Administrator may disallow use of this test on the basis of qualifications in the opinion expressed by the independent certified public accountant in his report on examination of the owner's or operator's financial statements (see paragraph (e)(3)(ii) of this section). An adverse opinion or a disclaimer of opinion will be cause for disallowance. The Regional Administrator will evaluate other qualifications on an individual basis. The owner or operator must provide alternate financial assurance as specified in this section within 30 days after notification of the disallowance.

(9) During the period of post-closure care, the Regional Administrator may approve a decrease in the current post-closure cost estimate for which this test demonstrates financial assurance if the owner or operator demonstrates to the Regional Administrator that the amount of the cost estimate exceeds the remaining cost of post-closure care.

(10) The owner or operator is no longer required to submit the items specified in paragraph (e)(3) of this section when:

(i) An owner or operator substitutes alternate financial assurance as specified in this section; or

(ii) The Regional Administrator releases the owner or operator from the requirements of this section in accordance with § 265.145(h).

(11) An owner or operator may meet the requirements of this section by obtaining a written guarantee, hereafter referred to as "corporate guarantee." The guarantor must be the parent corporation of the owner or operator. The guarantor must meet the requirements for owners or operators in paragraphs (e)(1) through (9) of this section and must comply with the terms of the corporate guarantee. The wording of the corporate guarantee must be identical to the wording specified in § 264.151(h). The corporate guarantee must accompany the items sent to the Regional Administrator as specified in paragraph (e)(3) of this section. The terms of the corporate guarantee must provide that:

(i) If the owner or operator fails to perform post-closure care of a facility covered by the corporate guarantee in accordance with the post-closure plan and other interim status requirements whenever required to do so, the guarantor will do so or establish a trust fund as specified in § 265.145(a) in the name of the owner or operator.

(ii) The corporate guarantee will remain in force unless the guarantor sends notice of cancellation by certified mail to the owner or operator and to the Regional Administrator. Cancellation may not occur, however, during the 120 days beginning on the date of receipt of the notice of cancellation by both the owner or operator and the Regional Administrator, as evidenced by the return receipts.

(iii) If the owner or operator fails to provide alternate financial assurance as specified in this section and obtain the written approval of such alternate assurance from the Regional Administrator within 90 days after receipt by both the owner or operator and the Regional Administrator of a notice of cancellation of the corporate guarantee from the guarantor, the guarantor will provide such alternate financial assurance in the name of the owner or operator.

(f) *Use of multiple financial mechanisms.* An owner or operator may satisfy the requirements of this section by establishing more than one financial mechanism per facility. These mechanisms are limited to trust funds, surety bonds, letters of credit, and insurance. The mechanisms must be as specified in paragraphs (a) through (d), respectively, of this section, except that it is the combination of mechanisms, rather than the single mechanism, which must provide financial assurance for an amount at least equal to the current post-closure cost estimate. If an owner or operator uses a trust fund in combination with a surety bond or a letter of credit, he may use the trust fund as the standby trust fund for the other mechanisms. A single standby trust fund may be established for two or more mechanisms. The Regional Administrator may use any or all of the mechanisms to provide for post-closure care of the facility.

(g) *Use of a financial mechanism for multiple facilities.* An owner or operator may use a financial assurance mechanism specified in this section to meet the requirements of this section for more than one facility. Evidence of financial assurance submitted to the Regional Administrator must include a list showing, for each facility, the EPA Identification Number, name, address, and the amount of funds for post-closure care assured by the mechanism. If the facilities covered by the mechanism are in more than one Region, identical evidence of financial assurance must be submitted to and maintained with the Regional Administrators of all such Regions. The amount of funds available through the mechanism must be no less than the sum of funds that would be available if a separate mechanism had been established and maintained for each facility. In directing funds available through the mechanism for post-closure care of any of the facilities covered by the mechanism, the Regional Administrator may direct only the amount of funds designated for that facility, unless the owner or operator agrees to the use of additional funds available under the mechanism.

(h) *Release of the owner or operator from the requirements of this section.* Within 60 days after receiving certifications from the owner or operator and an independent registered professional engineer that the post-closure care period has been completed in accordance with the approved post-closure plan, the Regional Administrator will notify the owner or operator in writing that he is no longer required by this section to maintain financial assurance for post-closure care of that unit, unless the Regional Administrator has reason to believe that post-closure care has not been in accordance with the approved post-closure plan. The Regional Administrator will provide the owner or operator a detailed written statement of any such reason to believe that post-closure care has not been in accordance with the approved post-closure plan.

[47 FR 15064, Apr. 7, 1982, as amended at 51 FR 16457, May 2, 1986]

§ 265.146 Use of a mechanism for financial assurance of both closure and post-closure care.

An owner or operator may satisfy the requirements for financial assurance for both closure and post-closure care for one or more facilities by using a trust fund, surety bond, letter of credit, insurance, financial test, or corporate guarantee that meets the specifications for the mechanism in both §§ 265.143 and 265.145. The amount of funds available through the mechanism must be no less than the sum of funds that would be available if a separate mechanism had been established and maintained for financial assurance of closure and of post-closure care.

§ 265.147 Liability requirements.

(a) *Coverage for sudden accidental occurrences.* By the effective date of these regulations, an owner or operator of a hazardous waste treatment, storage, or disposal facility, or a group

dental occurrences (or both as the case may be), arising from the operation of facilities covered by this corporate guarantee, or fails to pay an amount agreed to in settlement of claims arising from or alleged to arise from such injury or damage, the guarantor will do so up to the limits of coverage.

(ii) The corporate guarantee will remain in force unless the guarantor sends notice of cancellation by certified mail to the owner or operator and to the Regional Administrator(s). This guarantee may not be terminated unless and until the EPA Regional Administrator(s) approve(s) alternate liability coverage complying with § 264.147 and/or § 265.147.

(2)(i) In the case of corporations incorporated in the United States, a corporate guarantee may be used to satisfy the requirements of this section only if the Attorneys General or Insurance Commissioners of (A) the State in which the guarantor is incorporated, and (B) each State in which a facility covered by the guarantee is located have submitted a written statement to EPA that a corporate guarantee executed as described in this section and § 264.151(h)(2) is a legally valid and enforceable obligation in that State.

(ii) In the case of corporations incorporated outside the United States, a corporate guarantee may be used to satisfy the requirements of this section only if (A) the non-U.S. corporation has identified a registered agent for service of process in each State in which a facility covered by the guarantee is located and in the State in which it has its principal place of business, and if (B) the Attorney General or Insurance Commissioner of each State in which a facility covered by the guarantee is located and the State in which the guarantor corporation has its principal place of business, has submitted a written statement to EPA that a corporate guarantee executed as described in this section and § 264.151(h)(2) is a legally valid and enforceable obligation in that State.

(h) Notwithstanding any other provision of this part, an owner or operator using liability insurance to satisfy the requirements of this section may use, until October 16, 1982, a Hazardous Waste Facility Liability Endorsement or Certificate of Liability Insurance that does not certify that the insurer is licensed to transact the business of insurance, or eligible as an excess or surplus lines insurer, in one or more States.

(Approved by the Office of Management and Budget under control number 2000-0445, for paragraphs (a)(1)(i), (b)(1)(i), (b)(5), (c), (d), and (f) (3) through (6))

[47 FR 16558, Apr. 16, 1982, as amended at 47 FR 28627, July 1, 1982; 47 FR 30447, July 13, 1982; 48 FR 30115, June 30, 1983; 51 FR 16458, May 2, 1986; 51 FR 25355, July 11, 1986; 52 FR 44321, Nov. 18, 1987]

§ 265.148 Incapacity of owners or operators, guarantors, or financial institutions.

(a) An owner or operator must notify the Regional Administrator by certified mail of the commencement of a voluntary or involuntary proceeding under Title 11 (Bankruptcy), U.S. Code, naming the owner or operator as debtor, within 10 days after commencement of the proceeding. A guarantor of a corporate guarantee as specified in §§ 265.143(e) and 265.145(e) must make such a notification if he is named as debtor, as required under the terms of the corporate guarantee (§ 264.151(h)).

(b) An owner or operator who fulfills the requirements of § 265.143, § 265.145, or § 265.147 by obtaining a trust fund, surety bond, letter of credit, or insurance policy will be deemed to be without the required financial assurance or liability coverage in the event of bankruptcy of the trustee or issuing institution, or a suspension or revocation of the authority of the trustee institution to act as trustee or of the institution issuing the surety bond, letter of credit, or insurance policy to issue such instruments. The owner or operator must establish other financial assurance or liability coverage within 60 days after such an event.

§ 265.149 Use of State-required mechanisms.

(a) For a facility located in a State where EPA is administering the requirements of this subpart but where the State has hazardous waste regulations that include requirements for financial assurance of closure or post-closure care or liability coverage, an owner or operator may use State-required financial mechanisms to meet the requirements of § 265.143, § 265.145, or § 265.147 if the Regional Administrator determines that the State mechanisms are at least equivalent to the financial mechanisms specified in this subpart. The Regional Administrator will evaluate the equivalency of the mechanisms principally in terms of (1) certainty of the availability of funds for the required closure or post-closure care activities or liability coverage and (2) the amount of funds that will be made available. The Regional Administrator may also consider other factors as he deems appropriate. The owner or operator must submit to the Regional Administrator evidence of the establishment of the mechanism together with a letter requesting that the State-required mechanism be considered acceptable for meeting the requirements of this subpart. The submission must include the following information: The facility's EPA Identification Number, name, and address, and the amount of funds for closure or post-closure care or liability coverage assured by the mechanism. The Regional Administrator will notify the owner or operator of his determination regarding the mechanism's acceptability in lieu of financial mechanisms specified in this subpart. The Regional Administrator may require the owner or operator to submit additional information as is deemed necessary to make this determination. Pending this determination, the owner or operator will be deemed to be in compliance with the requirements of § 265.143, § 265.145, or § 265.147, as applicable.

(b) If a State-required mechanism is found acceptable as specified in paragraph (a) of this section except for the amount of funds available, the owner or operator may satisfy the requirements of this subpart by increasing the funds available through the State-required mechanism or using additional financial mechanisms as specified in this subpart. The amount of funds available through the State and Federal mechanisms must at least equal the amount required by this subpart.

§ 265.150 State assumption of responsibility.

(a) If a State either assumes legal responsibility for an owner's or operator's compliance with the closure, post-closure care, or liability requirements of this part or assures that funds will be available from State sources to cover those requirements, the owner or operator will be in compliance with the requirements of § 265.143, § 265.145, or § 265.147 if the Regional Administrator determines that the State's assumption of responsibility is at least equivalent to the financial mechanisms specified in this subpart. The Regional Administrator will evaluate the equivalency of State guarantees principally in terms of (1) certainty of the availability of funds for the required closure or post-closure care activities or liability coverage and (2) the amount of funds that will be made available. The Regional Administrator may also consider other factors as he deems appropriate. The owner or operator must submit to the Regional Administrator a letter from the State describing the nature of the State's assumption of responsibility together with a letter from the owner or operator requesting that the State's assumption of responsibility be considered acceptable for meeting the requirements of this subpart. The letter from the State must include, or have attached to it, the following information: The facility's EPA Identification Number, name, and address, and the amount of funds for closure or post-closure care or liability coverage that are guaranteed by the State. The Regional Administrator will notify the owner or operator of his determination regarding the acceptability of the State's guarantee in lieu of financial mechanisms specified in this subpart. The Regional Administrator may require the owner or operator to submit additional information as is deemed necessary to make this determination. Pending this determination, the owner or operator will be deemed to be in compliance with the requirements of

ations of a facility that is not a surface impoundment, landfill, or land treatment facility, he may require that an owner or operator of the facility comply with paragraph (b) of this section. An owner or operator must furnish to the Regional Administrator, within a reasonable time, any information which the Regional Administrator requests to determine whether cause exists for such adjustments of level or type of coverage. The Regional Administrator will process an adjustment of the level of required coverage as if it were a permit modification under § 270.41(a)(5) of this chapter and subject to the procedures of § 124.5 of this chapter. Notwithstanding any other provision, the Regional Administrator may hold a public hearing at his discretion or whenever he finds, on the basis of requests for a public hearing, a significant degree of public interest in a tentative decision to adjust the level or type of required coverage.

(e) *Period of coverage.* Within 60 days after receiving certifications from the owner or operator and an independent registered professional engineer that final closure has been completed in accordance with the approved closure plan, the Regional Administrator will notify the owner or operator in writing that he is no longer required by this section to maintain liability coverage for that facility, unless the Regional Administrator has reason to believe that closure has not been in accordance with the approved closure plan.

(f) *Financial test for liability coverage.* (1) An owner or operator may satisfy the requirements of this section by demonstrating that he passes a financial test as specified in this paragraph. To pass this test the owner or operator must meet the criteria of paragraph (f)(1)(i) or (ii) of this section:

(i) The owner or operator must have:

(A) Net working capital and tangible net worth each at least six times the amount of liability coverage to be demonstrated by this test; and

(B) Tangible net worth of at least $10 million; and

(C) Assets in the United States amounting to either: (*1*) At least 90 percent of his total assets; or (*2*) at least six times the amount of liability coverage to be demonstrated by this test.

(ii) The owner or operator must have:

(A) A current rating for his most recent bond issuance of AAA, AA, A, or BBB as issued by Standard and Poor's, or Aaa, Aa, A, or Baa as issued by Moody's; and

(B) Tangible net worth of at least $10 million; and

(C) Tangible net worth at least six times the amount of liability coverage to be demonstrated by this test; and

(D) Assets in the United States amounting to either: (*1*) At least 90 percent of his total assets; or (*2*) at least six times the amount of liability coverage to be demonstrated by this test.

(2) The phrase "amount of liability coverage" as used in paragraph (f)(1) of this section refers to the annual aggregate amounts for which coverage is required under paragraphs (a) and (b) of this section.

(3) To demonstrate that he meets this test, the owner or operator must submit the following three items to the Regional Administrator:

(i) A letter signed by the owner's or operator's chief financial officer and worded as specified in § 264.151(g). If an owner or operator is using the financial test to demonstrate both assurance for closure or post-closure care, as specified by §§ 264.143(f), 264.145(f), 265.143(e), and 265.145(e), *and* liability coverage, he must submit the letter specified in § 264.151(g) to cover both forms of financial responsibility; a separate letter as specified in § 264.151(f) is not required.

(ii) A copy of the independent certified public accountant's report on examination of the owner's or operator's financial statements for the latest completed fiscal year.

(iii) A special report from the owner's or operator's independent certified public accountant to the owner or operator stating that:

(A) He has compared the data which the letter from the chief financial officer specifies as having been derived from the independently audited, year-end financial statements for the latest fiscal year with the amounts in such financial statements; and

(B) In connection with that procedure, no matters came to his attention which caused him to believe that the specified data should be adjusted.

(4) The owner or operator may obtain a one-time extension of the time allowed for submission of the documents specified in paragraph (f)(3) of this section if the fiscal year of the owner or operator ends during the 90 days prior to the effective date of these regulations and if the year-end financial statements for that fiscal year will be audited by an independent certified public accountant. The extension will end no later than 90 days after the end of the owner's or operator's fiscal year. To obtain the extension, the owner's or operator's chief financial officer must send, by the effective date of these regulations, a letter to the Regional Administrator of each Region in which the owner's or operator's facilities to be covered by the financial test are located. This letter from the chief financial officer must:

(i) Request the extension;

(ii) Certify that he has grounds to believe that the owner or operator meets the criteria of the financial test;

(iii) Specify for each facility to be covered by the test the EPA Identification Number, name, address, the amount of liability coverage and, when applicable, current closure and post-closure cost estimates to be covered by the test;

(iv) Specify the date ending the owner's or operator's last complete fiscal year before the effective date of these regulations;

(v) Specify the date, no later than 90 days after the end of such fiscal year, when he will submit the documents specified in paragraph (f)(3) of this section; and

(vi) Certify that the year-end financial statements of the owner or operator for such fiscal year will be audited by an independent certified public accountant.

(5) After the initial submission of items specified in paragraph (f)(3) of this section, the owner or operator must send updated information to the Regional Administrator within 90 days after the close of each succeeding fiscal year. This information must consist of all three items specified in paragraph (f)(3) of this section.

(6) If the owner or operator no longer meets the requirements of paragraph (f)(1) of this section, he must obtain insurance for the entire amount of required liability coverage as specified in this section. Evidence of insurance must be submitted to the Regional Administrator within 90 days after the end of the fiscal year for which the year-end financial data show that the owner or operator no longer meets the test requirements.

(7) The Regional Administrator may disallow use of this test on the basis of qualifications in the opinion expressed by the independent certified public accountant in his report on examination of the owner's or operator's financial statements (see paragraph (f)(3)(ii) of this section). An adverse opinion or a disclaimer of opinion will be cause for disallowance. The Regional Administrator will evaluate other qualifications on an individual basis. The owner or operator must provide evidence of insurance for the entire amount of required liability coverage as specified in this section within 30 days after notification of disallowance.

(g) Corporate guarantee for liability coverage. (1) Subject to paragraph (g)(2) of this section, an owner or operator may meet the requirements of this section by obtaining a written guarantee, hereinafter referred to as "corporate guarantee." The guarantor must be the parent corporation of the owner or operator. The guarantor must meet the requirements for owners or operators in paragraphs (f)(1) through (7) of this section. The wording of the corporate guarantee must be identical to the wording specified in § 264.151(h)(2). A certified copy of the corporate guarantee must accompany the items sent to the Regional Administrator as specified in paragraph (f)(3) of this section. The terms of the corporate guarantee must provide that:

(i) If the owner or operator fails to satisfy a judgment based on a determination of liability for bodily injury or property damage to third parties caused by sudden or nonsudden acci-

by the Office of Management and Budget under control number 2050-0050)

§ 265.192 Design and installation of new tank systems or components.

(a) Owners or operators of new tank systems or components must ensure that the foundation, structural support, seams, connections, and pressure controls (if applicable) are adequately designed and that the tank system has sufficient structural strength, compatibility with the waste(s) to be stored or treated, and corrosion protection so that it will not collapse, rupture, or fail. The owner or operator must obtain a written assessment reviewed and certified by an independent, qualified, registered professional engineer in accordance with § 270.11(d) attesting that the system has sufficient structural integrity and is acceptable for the storing and treating of hazardous waste. This assessment must include, at a minimum, the following information:

(1) Design standard(s) according to which the tank(s) and ancillary equipment is or will be constructed.

(2) Hazardous characteristics of the waste(s) to be handled.

(3) For new tank systems or components in which the external shell of a metal tank or any external metal component of the tank system is or will be in contact with the soil or with water, a determination by a corrosion expert of:

(i) Factors affecting the potential for corrosion, including but not limited to:

(A) Soil moisture content;

(B) Soil pH;

(C) Soil sulfides level;

(D) Soil resistivity;

(E) Structure to soil potential;

(F) Influence of nearby underground metal structures (e.g., piping);

(G) Stray electric current; and,

(H) Existing corrosion-protection measures (e.g., coating, cathodic protection), and

(ii) The type and degree of external corrosion protection that are needed to ensure the integrity of the tank system during the use of the tank system or component, consisting of one or more of the following:

(A) Corrosion-resistant materials of construction such as special alloys or fiberglass-reinforced plastic;

(B) Corrosion-resistant coating (such as epoxy or fiberglass) with cathodic protection (e.g., impressed current or sacrificial anodes); and

(C) Electrical isolation devices such as insulating joints and flanges.

NOTE: The practices described in the National Association of Corrosion Engineers (NACE) standard, "Recommended Practice (RP-02-85)—Control of External Corrosion on Metallic Buried, Partially Buried, or Submerged Liquid Storage Systems," and the American Petroleum Institute (API) Publication 1632, "Cathodic Protection of Underground Petroleum Storage Tanks and Piping Systems," may be used, where applicable, as guidelines in providing corrosion protection for tank systems.

(4) For underground tank system components that are likely to be affected by vehicular traffic, a determination of design or operational measures that will protect the tank system against potential damage; and

(5) Design considerations to ensure that:

(i) Tank foundations will maintain the load of a full tank;

(ii) Tank systems will be anchored to prevent flotation or dislodgement where the tank system is placed in a saturated zone, or is located within a seismic fault zone; and

(iii) Tank systems will withstand the effects of frost heave.

(b) The owner or operator of a new tank system must ensure that proper handling procedures are adhered to in order to prevent damage to the system during installation. Prior to covering, enclosing, or placing a new tank system or component in use, an independent, qualified installation inspector or an independent, qualified, registered professional engineer, either of whom is trained and experienced in the proper installation of tank systems, must inspect the system or component for the presence of any of the following items:

(1) Weld breaks;

(2) Punctures;

(3) Scrapes of protective coatings;

(4) Cracks;

(5) Corrosion;

(6) Other structural damage or inadequate construction or installation.

All discrepancies must be remedied before the tank system is covered, enclosed, or placed in use.

(c) New tank systems or components and piping that are placed underground and that are backfilled must be provided with a backfill material that is a noncorrosive, porous, homogeneous substance and that is carefully installed so that the backfill is placed completely around the tank and compacted to ensure that the tank and piping are fully and uniformly supported.

(d) All new tanks and ancillary equipment must be tested for tightness prior to being covered, enclosed or placed in use. If a tank system is found not to be tight, all repairs necessary to remedy the leak(s) in the system must be performed prior to the tank system being covered, enclosed, or placed in use.

(e) Ancillary equipment must be supported and protected against physical damage and excessive stress due to settlement, vibration, expansion or contraction.

NOTE: The piping system installation procedures described in American Petroleum Institute (API) Publication 1615 (November 1979), "Installation of Underground Petroleum Storage Systems," or ANSI Standard B31.3, "Petroleum Refinery System," may be used, where applicable, as guidelines for proper installation of piping systems.

(f) The owner or operator must provide the type and degree of corrosion protection necessary, based on the information provided under paragraph (a)(3) of this section, to ensure the integrity of the tank system during use of the tank system. The installation of a corrosion protection system that is field fabricated must be supervised by an independent corrosion expert to ensure proper installation.

(g) The owner or operator must obtain and keep on file at the facility written statements by those persons required to certify the design of the tank system and supervise the installation of the tank system in accordance with the requirements of paragraphs (b) through (f) of this section to attest that the tank system was properly designed and installed and that repairs, pursuant to paragraphs (b) and (d) of this section were performed. These written statements must also include the certification statement as required in § 270.11(d) of this chapter.

(Information collection requirements contained in paragraphs (a) and (g) were approved by the Office of Management and Budget under control number 2050-0050)

[51 FR 25479, July 14, 1986; 51 FR 29430, Aug. 15, 1986]

§ 265.193 Containment and detection of releases.

(a) In order to prevent the release of hazardous waste or hazardous constituents to the environment, secondary containment that meets the requirements of this section must be provided (except as provided in paragraphs (f) and (g) of this section):

(1) For all new tank systems or components, prior to their being put into service;

(2) For all existing tanks used to store or treat EPA Hazardous Waste Nos. F020, F021, F022, F023, F026, and F027, within two years after January 12, 1987;

(3) For those existing tank systems of known and documentable age, within two years after January 12, 1987, or when the tank systems have reached 15 years of age, whichever comes later;

(4) For those existing tank system for which the age cannot be documented, within eight years of January 12, 1987; but if the age of the facility is greater than seven years, secondary containment must be provided by the time the facility reaches 15 years of age, or within two years of January 12, 1987, whichever comes later; and

(5) For tank systems that store or treat materials that become hazardous wastes subsequent to January 12, 1987, within the time intervals required in paragraphs (a)(1) through (a)(4) of this section, except that the date that a material becomes a hazardous waste must be used in place of January 12, 1987.

(b) Secondary containment systems must be:

(1) Designed, installed, and operated to prevent any migration of wastes or accumulated liquid out of the system

§§ 265.143, § 265.145, or § 265.147, as applicable.

(b) If a State's assumption of responsibility is found acceptable as specified in paragraph (a) of this section except for the amount of funds available, the owner or operator may satisfy the requirements of this subpart by use of both the State's assurance *and* additional financial mechanisms as specified in this subpart. The amount of funds available through the State and Federal mechanisms must at least equal the amount required by this subpart.

Subpart I—Use and Management of Containers

§ 265.170 Applicability.

The regulations in this subpart apply to owners and operators of all hazardous waste facilities that store containers of hazardous waste, except as § 265.1 provides otherwise.

§ 265.171 Condition of containers.

If a container holding hazardous waste is not in good condition, or if it begins to leak, the owner or operator must transfer the hazardous waste from this container to a container that is in good condition, or manage the waste in some other way that complies with the requirements of this part.

§ 265.172 Compatibility of waste with container.

The owner or operator must use a container made of or lined with materials which will not react with, and are otherwise compatible with, the hazardous waste to be stored, so that the ability of the container to contain the waste is not impaired.

§ 265.173 Management of containers.

(a) A container holding hazardous waste must always be closed during storage, except when it is necessary to add or remove waste.

(b) A container holding hazardous waste must not be opened, handled, or stored in a manner which may rupture the container or cause it to leak.

[*Comment:* Re-use of containers in transportation is governed by U.S. Department of Transportation regulations, including those set forth in 49 CFR 173.28.]

[45 FR 33232, May 19, 1980, as amended at 45 FR 78529, Nov. 25, 1980]

§ 265.174 Inspections.

The owner or operator must inspect areas where containers are stored, at least weekly, looking for leaks and for deterioration caused by corrosion or other factors.

[*Comment:* See § 265.171 for remedial action required if deterioration or leaks are detected.]

§ 265.175 [Reserved]

§ 265.176 Special requirements for ignitable or reactive waste.

Containers holding ignitable or reactive waste must be located at least 15 meters (50 feet) from the facility's property line.

[*Comment:* See § 265.17(a) for additional requirements.]

§ 265.177 Special requirements for incompatible wastes.

(a) Incompatible wastes, or incompatible wastes and materials, (see Appendix V for examples) must not be placed in the same container, unless § 265.17(b) is complied with.

(b) Hazardous waste must not be placed in an unwashed container that previously held an incompatible waste or material (see Appendix V for examples), unless § 265.17(b) is complied with.

(c) A storage container holding a hazardous waste that is incompatible with any waste or other materials stored nearby in other containers, piles, open tanks, or surface impoundments must be separated from the other materials or protected from them by means of a dike, berm, wall, or other device.

[*Comment:* The purpose of this is to prevent fires, explosions, gaseous emissions, leaching, or other discharge of hazardous waste or hazardous waste constituents which could result from the mixing of incompatible wastes or materials if containers break or leak.]

Subpart J—Tank Systems

SOURCE: 51 FR 25479, July 14, 1986, unless otherwise noted.

§ 265.190 Applicability.

The regulations of this subpart apply to owners or operators of facilities that use tank systems for storing or treating hazardous waste, except as otherwise provided in paragraphs (a) and (b) of this section or in § 265.1 of this part.

(a) Tanks that are used to store or treat hazardous waste containing no free liquids and that are situated inside a building with an impermeable floor are exempted from the requirements of § 265.193 of this subpart. To demonstrate the absence or presence of free liquids in the stored/treated waste, EPA Method 9095 (Paint Filter Liquids Test) as described in "Test Methods for Evaluating Solid Wastes, Physical/Chemical Methods" (EPA Publication No. SW-846) must be used.

(b) Tanks, including sumps, as defined in § 260.10, that serve as part of a secondary containment system to collect or contain releases of hazardous wastes are exempted from the requirements in § 265.193.

[Information collection requirement contained in paragraph (a) was approved by the Office of Management and Budget under control number 2050-0050]

§ 265.191 Assessment of existing tank system's integrity.

(a) For each existing tank system that does not have secondary containment meeting the requirements of § 265.193, the owner or operator must determine that the tank system is not leaking or is unfit for use. Except as provided in paragraph (c) of this section, the owner or operator must obtain and keep on file at the facility a written assessment reviewed and certified by an independent, qualified, registered professional engineer in accordance with § 270.11(d), that attests to the tank system's integrity by January 12, 1988.

(b) This assessment must determine that the tank system is adequately designed and has sufficient structural strength and compatibility with the waste(s) to be stored or treated to ensure that it will not collapse, rupture, or fail. At a minimum, this assessment must consider the following:

(1) Design standard(s), if available, according to which the tank and ancillary equipment were constructed;

(2) Hazardous characteristics of the waste(s) that have been or will be handled;

(3) Existing corrosion protection measures;

(4) Documented age of the tank system, if available, (otherwise, an estimate of the age); and

(5) Results of a leak test, internal inspection, or other tank integrity examination such that:

(i) For non-enterable underground tanks, this assessment must consist of a leak test that is capable of taking into account the effects of temperature variations, tank end deflection, vapor pockets, and high water table effects,

(ii) For other than non-enterable underground tanks and for ancillary equipment, this assessment must be either a leak test, as described above, or an internal inspection and/or other tank integrity examination certified by an independent, qualified, registered professional engineer in accordance with § 270.11(d) that addresses cracks, leaks, corrosion, and erosion.

[NOTE: The practices described in the American Petroleum Institute (API) Publication, Guide for Inspection of Refinery Equipment, Chapter XIII, "Atmospheric and Low-Pressure Storage Tanks," 4th edition, 1981, may be used, where applicable, as guidelines in conducting the integrity examination of an other than non-enterable underground tank system.]

(c) Tank systems that store or treat materials that become hazardous wastes subsequent to July 14, 1986 must conduct this assessment within 12 months after the date that the waste becomes a hazardous waste.

(d) If, as a result of the assessment conducted in accordance with paragraph (a) of this section, a tank system is found to be leaking or unfit for use, the owner or operator must comply with the requirements of § 265.196.

[Information collection requirements contained in paragraphs (a)-(d) were approved

(iv) All other factors that would influence the quality and mobility of the hazardous constituents and the potential for them to migrate to ground water or surface water.

(2) In deciding whether to grant a variance, based on a demonstration of no substantial present or potential hazard, the Regional Administrator will consider:

(i) The potential adverse effects on ground water, surface water, and land quality taking into account:

(A) The physical and chemical characteristics of the waste in the tank system, including its potential for migration,

(B) The hydrogeological characteristics of the facility and surrounding land,

(C) The potential for health risks caused by human exposure to waste constituents,

(D) The potential for damage to wildlife, crops, vegetation, and physical structures caused by exposure to waste constituents, and

(E) The persistence and permanence of the potential adverse effects;

(ii) The potential adverse effects of a release on ground-water quality, taking into account:

(A) The quantity and quality of ground water and the direction of ground water flow,

(B) The proximity and withdrawal rates of water in the area,

(C) The current and future uses of ground water in the area, and

(D) The existing quality of ground water, including other sources of contamination and their cumulative impact on the ground-water quality;

(iii) The potential adverse effects of a release on surface water quality, taking into account:

(A) The quantity and quality of ground water and the direction of ground-water flow,

(B) The patterns of rainfall in the region,

(C) The proximity of the tank system to surface waters,

(D) The current and future uses of surface waters in the area and any water quality standards established for those surface waters, and

(E) The existing quality of surface water, including other sources of contamination and the cumulative impact on surface-water quality; and

(iv) The potential adverse effects of a release on the land surrounding the tank system, taking into account:

(A) The patterns of rainfall in the region, and

(B) The current and future uses of the surrounding land.

(3) The owner or operator of a tank system, for which a variance from secondary containment had been granted in accordance with the requirements of paragraph (g)(1) of this section, at which a release of hazardous waste has occurred from the primary tank system but has not migrated beyond the zone of engineering control (as established in the variance), must:

(i) Comply with the requirements of § 265.196, except paragraph (d); and

(ii) Decontaminate or remove contaminated soil to the extent necessary to:

(A) Enable the tank system, for which the variance was granted, to resume operation with the capability for the detection of and response to releases at least equivalent to the capability it had prior to the release, and

(B) Prevent the migration of hazardous waste or hazardous constituents to ground water or surface water; and

(iii) If contaminated soil cannot be removed or decontaminated in accordance with paragraph (g)(3)(ii) of this section, comply with the requirements of § 264.197(b);

(4) The owner or operator of a tank system, for which a variance from secondary containment had been granted in accordance with the requirements of paragraph (g)(1) of this section, at which a release of hazardous waste has occurred from the primary tank system and has migrated beyond the zone of engineering control (as established in the variance), must:

(i) Comply with the requirements of § 265.196(a), (b), (c), and (d); and

(ii) Prevent the migration of hazardous waste or hazardous constituents to ground water or surface water, if possible, and decontaminate or remove contaminated soil. If contaminated soil cannot be decontaminated or removed, or if ground water has been contaminated, the owner or operator must comply with the requirements of § 265.197(b);

(iii) If repairing, replacing, or reinstalling the tank system, provide secondary containment in accordance with the requirements of paragraphs (a) through (f) of this section or reapply for a variance from secondary containment and meet the requirements for new tank systems in § 265.192 if the tank system is replaced. The owner or operator must comply with these requirements even if contaminated soil can be decontaminated or removed, and ground water or surface water has not been contaminated.

(h) The following procedures must be followed in order to request a variance from secondary containment:

(1) The Regional Administrator must be notified in writing by the owner or operator that he intends to conduct and submit a demonstration for a variance from secondary containment as allowed in paragraph (g) of this section according to the following schedule:

(i) For existing tank systems, at least 24 months prior to the date that secondary containment must be provided in accordance with paragraph (a) of this section; and

(ii) For new tank systems, at least 30 days prior to entering into a contract for installation of the tank system.

(2) As part of the notification, the owner or operator must also submit to the Regional Administrator a description of the steps necessary to conduct the demonstration and a timetable for completing each of the steps. The demonstration must address each of the factors listed in paragraph (g)(1) or paragraph (g)(2) of this section.

(3) The demonstration for a variance must be completed and submitted to the Regional Administrator within 180 days after notifying the Regional Administrator of intent to conduct the demonstration.

(4) The Regional Administrator will inform the public, through a newspaper notice, of the availability of the demonstration for a variance. The notice shall be placed in a daily or weekly major local newspaper of general circulation and shall provide at least 30 days from the date of the notice for the public to review and comment on the demonstration for a variance. The Regional Administrator also will hold a public hearing, in response to a request or at his own discretion, whenever such a hearing might clarify one or more issues concerning the demonstration for a variance. Public notice of the hearing will be given at least 30 days prior to the date of the hearing and may be given at the same time as notice of the opportunity for the public to review and comment on the demonstration. These two notices may be combined.

(5) The Regional Administrator will approve or disapprove the request for a variance within 90 days of receipt of the demonstration from the owner or operator and will notify in writing the owner or operator and each person who submitted written comments or requested notice of the variance decision. If the demonstration for a variance is incomplete or does not include sufficient information, the 90-day time period will begin when the Regional Administrator receives a complete demonstration, including all information necessary to make a final determination. If the public comment period in paragraph (h)(4) of this section is extended, the 90-day time period will be similarly extended.

(i) All tank systems, until such time as secondary containment meeting the requirements of this section is provided, must comply with the following:

(1) For non-enterable underground tanks, a leak test that meets the requirements of § 265.191(b)(5) must be conducted at least annually;

(2) For other than non-enterable underground tanks and for all ancillary equipment, an annual leak test, as described in paragraph (i)(1) of this section, or an internal inspection or other tank integrity examination by an independent, qualified, registered professional engineer that addresses cracks, leaks, corrosion, and erosion must be conducted at least annually. The owner or operator must remove the stored waste from the tank, if necessary, to allow the condition of all internal tank surfaces to be assessed.

NOTE: The practices described in the American Petroleum Institute (API) Publication Guide for Inspection of Refining

to the soil, ground water, or surface water at any time during the use of the tank system; and

(2) Capable of detecting and collecting releases and accumulated liquids until the collected material is removed.

(c) To meet the requirements of paragraph (b) of this section, secondary containment systems must be at a minimum:

(1) Constructed of or lined with materials that are compatible with the waste(s) to be placed in the tank system and must have sufficient strength and thickness to prevent failure due to pressure gradients (including static head and external hydrological forces), physical contact with the waste to which they are exposed, climatic conditions, the stress of installation, and the stress of daily operation (including stresses from nearby vehicular traffic);

(2) Placed on a foundation or base capable of providing support to the secondary containment system and resistance to pressure gradients above and below the system and capable of preventing failure due to settlement, compression, or uplift;

(3) Provided with a leak detection system that is designed and operated so that it will detect the failure of either the primary and secondary containment structure or any release of hazardous waste or accumulated liquid in the secondary containment system within 24 hours, or at the earliest practicable time if the existing detection technology or site conditions will not allow detection of a release within 24 hours;

(4) Sloped or otherwise designed or operated to drain and remove liquids resulting from leaks, spills, or precipitation. Spilled or leaked waste and accumulated precipitation must be removed from the secondary containment system within 24 hours, or in as timely a manner as is possible to prevent harm to human health or the environment, if removal of the released waste or accumulated precipitation cannot be accomplished within 24 hours.

NOTE: If the collected material is a hazardous waste under Part 261 of this chapter, it is subject to management as a hazardous waste in accordance with all applicable requirements of Parts 262 through 265 of this chapter. If the collected material is discharged through a point source to waters of the United States, it is subject to the requirements of sections 301, 304, and 402 of the Clean Water Act, as amended. If discharged to Publicly Owned Treatment Works (POTWs), it is subject to the requirements of section 307 of the Clear Water Act, as amended. If the collected material is released to the environment, it may be subject to the reporting requirements of 40 CFR Part 302.

(d) Secondary containment for tanks must include one or more of the following devices:

(1) A liner (external to the tank);

(2) A vault;

(3) A double-walled tank; or

(4) An equivalent device as approved by the Regional Administrator.

(e) In addition to the requirements of paragraphs (b), (c), and (d) of this section, secondary containment systems must satisfy the following requirements:

(1) External liner systems must be:

(i) Designed or operated to contain 100 percent of the capacity of the largest tank within its boundary;

(ii) Designed or operated to prevent run-on or infiltration of precipitation into the secondary containment system unless the collection system has sufficient excess capacity to contain run-on or infiltration. Such additional capacity must be sufficient to contain precipitation from a 25-year, 24-hour rainfall event;

(iii) Free of cracks or gaps; and

(iv) Designed and installed to completely surround the tank and to cover all surrounding earth likely to come into contact with the waste if released from the tank(s) (i.e., capable of preventing lateral as well as vertical migration of the waste).

(2) Vault systems must be:

(i) Designed or operated to contain 100 percent of the capacity of the largest tank within its boundary;

(ii) Designed or operated to prevent run-on or infiltration of precipitation into the secondary containment system unless the collection system has sufficient excess capacity to contain run-on or infiltration. Such additional capacity must be sufficient to contain precipitation from a 25-year, 24-hour rainfall event;

(iii) Constructed with chemical-resistant water stops in place at all joints (if any);

(iv) Provided with an impermeable interior coating or lining that is compatible with the stored waste and that will prevent migration of waste into the concrete;

(v) Provided with a means to protect against the formation of and ignition of vapors within the vault, if the waste being stored or treated:

(A) Meets the definition of ignitable waste under § 262.21 of this chapter, or

(B) Meets the definition of reactive waste under § 262.21 of this chapter and may form an ignitable or explosive vapor; and

(vi) Provided with an exterior moisture barrier or be otherwise designed or operated to prevent migration of moisture into the vault if the vault is subject to hydraulic pressure.

(3) Double-walled tanks must be:

(i) Designed as an integral structure (i.e., an inner tank within an outer shell) so that any release from the inner tank is contained by the outer shell;

(ii) Protected, if constructed of metal, from both corrosion of the primary tank interior and the external surface of the outer shell; and

(iii) Provided with a built-in, continuous leak detection system capable of detecting a release within 24 hours or at the earliest practicable time, if the owner or operator can demonstrate to the Regional Administrator, and the Regional Administrator concurs, that the existing leak detection technology or site conditions will not allow detection of a release within 24 hours.

NOTE: The provisions outlined in the Steel Tank Institute's (STI) "Standard for Dual Wall Underground Steel Storage Tank" may be used as guidelines for aspects of the design of underground steel double-walled tanks.

(f) Ancillary equipment must be provided with full secondary containment (e.g., trench, jacketing, double-walled piping) that meets the requirements of paragraphs (b) and (c) of this section except for:

(1) Aboveground piping (exclusive of flanges, joints, valves, and connections) that are visually inspected for leaks on a daily basis;

(2) Welded flanges, welded joints, and welded connections that are visually inspected for leaks on a daily basis;

(3) Sealless or magnetic coupling pumps that are visually inspected for leaks on a daily basis; and

(4) Pressurized aboveground piping systems with automatic shut-off devices (e.g., excess flow check valves, flow metering shutdown devices, loss of pressure actuated shut-off devices) that are visually inspected for leaks on a daily basis.

(g) The owner or operator may obtain a variance from the requirements of this Section if the Regional Administrator finds, as a result of a demonstration by the owner or operator, either: that alternative design and operating practices, together with location characteristics, will prevent the migration of hazardous waste or hazardous constituents into the ground water *or* surface water at least as effectively as secondary containment during the active life of the tank system *or* that in the event of a release that does migrate to ground water or surface water, no substantial present or potential hazard will be posed to human health or the environment. New underground tank systems may not, per a demonstration in accordance with paragraph (g)(2) of this section, be exempted from the secondary containment requirements of this section. Application for a variance as allowed in paragraph (g) of this section does not waive compliance with the requirements of this subpart for new tank systems. (1) In deciding whether to grant a variance based on a demonstration of equivalent protection of ground water and surface water, the Regional Administrator will consider:

(i) The nature and quantity of the waste;

(ii) The proposed alternate design and operation;

(iii) The hydrogeologic setting of the facility, including the thickness of soils between the tank system and ground water; and

20-142 O—88——22

tor must provide the component of the system from which the leak occurred with secondary containment that satisfies the requirements of § 265.193 before it can be returned to service, unless the source of the leak is an aboveground portion of a tank system. If the source is an aboveground component that can be inspected visually, the component must be repaired and may be returned to service without secondary containment as long as the requirements of paragraph (f) of this section are satisfied. If a component is replaced to comply with the requirements of this subparagraph, that component must satisfy the requirements for new tank systems or components in §§ 265.192 and 265.193. Additionally, if a leak has occurred in any portion of a tank system component that is not readily accessible for visual inspection (e.g., the bottom of an inground or onground tank), the entire component must be provided with secondary containment in accordance with § 265.193 prior to being returned to use.

(f) *Certification of major repairs.* If the owner or operator has repaired a tank system in accordance with paragraph (e) of this section, and the repair has been extensive (e.g., installation of an internal liner; repair of a ruptured primary containment or secondary containment vessel), the tank system must not be returned to service unless the owner/operator has obtained a certification by an independent, qualified, registered professional engineer in accordance with § 270.11(d) that the repaired system is capable of handling hazardous wastes without release for the intended life of the system. This certification must be submitted to the Regional Administrator within seven days after returning the tank system to use.

NOTE: The Regional Administrator may, on the basis of any information received that there is or has been a release of hazardous waste or hazardous constituents into the environment, issue an order under RCRA sections 3004(w), 3008(h), or 7003(a) requiring corrective action or such other response as deemed necessary to protect human health or the environment.

NOTE: See § 265.15(c) for the requirements necessary to remedy a failure. Also, 40 CFR Part 302 requires the owner or operator to notify the National Response Center of a release of any "reportable quantity."

(Information collection requirements contained in paragraphs (d)-(f) were approved by the Office of Management and Budget under control number 2050-0050)

§ 265.197 Closure and post-closure care.

(a) At closure of a tank system, the owner or operator must remove or decontaminate all waste residues, contaminated containment system components (liners, etc.), contaminated soils, and structures and equipment contaminated with waste, and manage them as hazardous waste, unless § 261.3(d) of this Chapter applies. The closure plan, closure activities, cost estimates for closure, and financial responsibility for tank systems must meet all of the requirements specified in Subparts G and H of this Part.

(b) If the owner or operator demonstrates that not all contaminated soils can be practicably removed or decontaminated as required in paragraph (a) of this section, then the owner or operator must close the tank system and perform post-closure care in accordance with the closure and post-closure care requirements that apply to landfills (§ 265.310) In addition, for the purposes of closure, post-closure, and financial responsibility, such a tank system is then considered to be a landfill, and the owner or operator must meet all of the requirements for landfills specified in Subparts G and H of this Part.

(c) If an owner or operator has a tank system which does not have secondary containment that meets the requirements of § 265.193(b) through (f) and which is not exempt from the secondary containment requirements in accordance with § 265.193(g), then,

(1) The closure plan for the tank system must include both a plan for complying with paragraph (a) of this section and a contingent plan for complying with paragraph (b) of this section.

(2) A contingent post-closure plan for complying with paragraph (b) of this section must be prepared and submitted as part of the permit application.

(3) The cost estimates calculated for closure and post-closure care must reflect the costs of complying with the contingent closure plan and the contingent post-closure plan, if these costs are greater than the costs of complying with the closure plan prepared for the expected closure under paragraph (a) of this section.

(4) Financial assurance must be based on the cost estimates in paragraph (c)(3) of this section.

(5) For the purposes of the contingent closure and post-closure plans, such a tank system is considered to be a landfill, and the contingent plans must meet all of the closure, post-closure, and financial responsibility requirements for landfills under Subparts G and H of this Part.

(Information collection requirements contained in paragraphs (a)-(c) were approved by the Office of Management and Budget under control number 2050-0050)

§ 265.198 Special requirements for ignitable or reactive wastes.

(a) Ignitable or reactive waste must not be placed in a tank system, unless:

(1) The waste is treated, rendered, or mixed before or immediately after placement in the tank system so that:

(i) The resulting waste, mixture, or dissolved material no longer meets the definition of ignitable or reactive waste under §§ 261.21 or 261.23 of this chapter; and

(ii) Section 265.17(b) is complied with; or

(2) The waste is stored or treated in such a way that it is protected from any material or conditions that may cause the waste to ignite or react; or

(3) The tank system is used solely for emergencies.

(b) The owner or operator of a facility where ignitable or reactive waste is stored or treated in tanks must comply with the requirements for the maintenance of protective distances between the waste management area and any public ways, streets, alleys, or an adjoining property line that can be built upon as required in Tables 2-1 through 2-6 of the National Fire Protection Association's "Flammable and Combustible Liquids Code," (1977 or 1981), (incorporated by reference, see § 260.11).

§ 265.199 Special requirements for incompatible wastes.

(a) Incompatible wastes, or incompatible waste and materials, must not be placed in the same tank system, unless § 265.17(b) is complied with.

(b) Hazardous waste must not be placed in a tank system that has not been decontaminated and that previously held an incompatible waste or material, unless § 265.17(b) is complied with.

§ 265.200 Waste analysis and trial tests.

In addition to performing the waste analysis required by § 265.13, the owner or operator must, whenever a tank system is to be used to treat chemically or to store a hazardous waste that is substantially different from waste previously treated or stored in that tank system; or treat chemically a hazardous waste with a substantially different process than any previously used in that tank system:

(a) Conduct waste analyses and trial treatment or storage tests (e.g., bench-scale or pilot-plant scale tests); or

(b) Obtain written, documented information on similar waste under similar operating conditions to show that the proposed treatment or storage will meet the requirements of § 265.194(a).

NOTE: Section 265.13 requires the waste analysis plan to include analyses needed to comply with §§ 265.198 and 265.199. Section 265.73 requires the owner or operator to place the results from each waste analysis and trial test, or the documented information, in the operating record of the facility.

§ 265.201 Special requirements for generators of between 100 and 1,000 kg/mo that accumulate hazardous waste in tanks.

(a) The requirements of this section apply to small quantity generators of more than 100 kg but less than 1,000 kg of hazardous waste in a calendar month, that accumulate hazardous waste in tanks for less than 180 days (or 270 days if the generator must ship the waste greater than 200 miles), and do not accumulate over 6,000 kg onsite at any time.

(b) Generators of between 100 and 1,000 kg/mo hazardous waste must

Equipment, Chapter XIII, "Atmospheric and Low Pressure Storage Tanks," 4th edition, 1981, may be used, when applicable, as guidelines for assessing the overall condition of the tank system.

(3) The owner or operator must maintain on file at the facility a record of the results of the assessments conducted in accordance with paragraphs (i)(1) through (i)(3) of this section.

(4) If a tank system or component is found to be leaking or unfit-for-use as a result of the leak test or assessment in paragraphs (i)(1) through (i)(3) of this section, the owner or operator must comply with the requirements of § 265.196.

(Information collection requirements contained in paragraphs (c)–(e) and (g)–(i) were approved by the Office of Management and Budget under control number 2050–0050)

[51 FR 25479, July 14, 1986; 51 FR 29430, Aug. 15, 1986]

§ 265.194 General operating requirements.

(a) Hazardous wastes or treatment reagents must not be placed in a tank system if they could cause the tank, its ancillary equipment, or the secondary containment system to rupture, leak, corrode, or otherwise fail.

(b) The owner or operator must use appropriate controls and practices to prevent spills and overflows from tank or secondary containment systems. These include at a minimum:

(1) Spill prevention controls (e.g., check valves, dry discount couplings);

(2) Overfill prevention controls (e.g., level sensing devices, high level alarms, automatic feed cutoff, or bypass to a standby tank); and

(3) Maintenance of sufficient freeboard in uncovered tanks to prevent overtopping by wave or wind action or by precipitation.

(c) The owner or operator must comply with the requirements of § 265.196 if a leak or spill occurs in the tank system.

(Information collection requirements contained in paragraphs (c) were approved by the Office of Management and Budget under control number 2050–0050)

§ 265.195 Inspections.

(a) The owner or operator must inspect, where present, at least once each operating day:

(1) Overfill/spill control equipment (e.g., waste-feed cutoff systems, bypass systems, and drainage systems) to ensure that it is in good working order;

(2) The aboveground portions of the tank system, if any, to detect corrosion or releases of waste;

(3) Data gathered from monitoring equipment and leak-detection equipment, (e.g., pressure and temperature gauges, monitoring wells) to ensure that the tank system is being operated according to its design; and

(4) The construction materials and the area immediately surrounding the externally accessible portion of the tank system including secondary containment structures (e.g., dikes) to detect erosion or signs of releases of hazardous waste (e.g., wet spots, dead vegetation);

NOTE: Section 265.15(c) requires the owner or operator to remedy any deterioration or malfunction he finds. Section 265.196 requires the owner or operator to notify the Regional Administrator within 24 hours of confirming a release. Also, 40 CFR Part 302 may require the owner or operator to notify the National Response Center of a release.

(b) The owner or operator must inspect cathodic protection systems, if present, according to, at a minimum, the following schedule to ensure that they are functioning properly:

(1) The proper operation of the cathodic protection system must be confirmed within six months after initial installation, and annually thereafter; and

(2) All sources of impressed current must be inspected and/or tested, as appropriate, at least bimonthly (i.e., every other month).

NOTE: The practices described in the National Association of Corrosion Engineers (NACE) standard, "Recommended Practice (RP-02-85)—Control of External Corrosion on Metallic Buried, Partially Buried, or Submerged Liquid Storage Systems," and the American Petroleum Institute (API) Publication 1632, "Cathodic Protection of Underground Petroleum Storage Tanks and Piping Systems," may be used, where applicable, as guidelines in maintaining and inspecting cathodic protection systems.

(c) The owner or operator must document in the operating record of the facility an inspection of those items in paragraphs (a) and (b) of this section.

(Information collection requirements contained in paragraphs (a)–(c) were approved by the Office of Management and Budget under control number 2050–0050)

§ 265.196 Response to leaks or spills and disposition of leaking or unfit-for-use tank systems.

A tank system or secondary containment system from which there has been a leak or spill, or which is unfit for use, must be removed from service immediately, and the owner or operator must satisfy the following requirements:

(a) *Cessation of use; prevent flow or addition of wastes.* The owner or operator must immediately stop the flow of hazardous waste into the tank system or secondary containment system and inspect the system to determine the cause of the release.

(b) *Removal of waste from tank system or secondary containment system.* (1) If the release was from the tank system, the owner or operator must, within 24 hours after detection of the leak or, if the owner or operator demonstrates that that is not possible, at the earliest practicable time remove as much of the waste as is necessary to prevent further release of hazardous waste to the environment and to allow inspection and repair of the tank system to be performed.

(2) If the release was to a secondary containment system, all released materials must be removed within 24 hours or in as timely a manner as is possible to prevent harm to human health and the environment.

(c) *Containment of visible releases to the environment.* The owner or operator must immediately conduct a visual inspection of the release and, based upon that inspection:

(1) Prevent further migration of the leak or spill to soils or surface water; and

(2) Remove, and properly dispose of, any visible contamination of the soil or surface water.

(d) *Notifications, reports.* (1) Any release to the environment, except as provided in paragraph (d)(2) of this section, must be reported to the Regional Administrator within 24 hours of detection. If the release has been reported pursuant to 40 CFR Part 302, that report will satisfy this requirement.

(2) A leak or spill of hazardous waste that is:

(i) Less than or equal to a quantity of one (1) pound, and

(ii) Immediately contained and cleaned-up is exempted from the requirements of this paragraph.

(3) Within 30 days of detection of a release to the environment, a report containing the following information must be submitted to the Regional Administrator:

(i) Likely route of migration of the release;

(ii) Characteristics of the surrounding soil (soil composition, geology, hydrogeology, climate);

(iii) Results of any monitoring or sampling conducted in connection with the release, (if available). If sampling or monitoring data relating to the release are not available within 30 days, these data must be submitted to the Regional Administrator as soon as they become available.;

(iv) Proximity to downgradient drinking water, surface water, and population areas; and

(v) Description of response actions taken or planned.

(e) *Provision of secondary containment, repair, or closure.* (1) Unless the owner or operator satisfies the requirements of paragraphs (e) (2) through (4) of this section, the tank system must be closed in accordance with § 265.197.

(2) If the cause of the release was a spill that has not damaged the integrity of the system, the owner/operator may return the system to service as soon as the released waste is removed and repairs, if necessary, are made.

(3) If the cause of the release was a leak from the primary tank system into the secondary containment system, the system must be repaired prior to returning the tank system to service.

(4) If the source of the release was a leak to the environment from a component of a tank system without secondary containment, the owner/opera-

§ 265.252 Waste analysis.

In addition to the waste analyses required by § 265.13, the owner or operator must analyze a representative sample of waste from each incoming movement before adding the waste to any existing pile, *unless* (1) The only wastes the facility receives which are amenable to piling are compatible with each other, or (2) the waste received is compatible with the waste in the pile to which it is to be added. The analysis conducted must be capable of differentiating between the types of hazardous waste the owner or operator places in piles, so that mixing of incompatible waste does not inadvertently occur. The analysis must include a visual comparison of color and texture.

[*Comment:* As required by § 265.13, the waste analysis plan must include analyses needed to comply with §§ 265.256 and 265.257. As required by § 265.73, the owner or operator must place the results of this analysis in the operating record of the facility.]

§ 265.253 Containment.

If leachate or run-off from a pile is a hazardous waste, then either:

(a)(1) The pile must be placed on an impermeable base that is compatible with the waste under the conditions of treatment or storage;

(2) The owner or operator must design, construct, operate, and maintain a run-on control system capable of preventing flow onto the active portion of the pile during peak discharge from at least a 25-year storm;

(3) The owner or operator must design, construct, operate, and maintain a run-off management system to collect and control at least the water volume resulting from a 24-hour, 25-year storm; and

(4) Collection and holding facilities (e.g., tanks or basins) associated with run-on and run-off control systems must be emptied or otherwise managed expeditiously to maintain design capacity of the system; or

(b)(1) The pile must be protected from precipitation and run-on by some other means; and

(2) No liquids or wastes containing free liquids may be placed in the pile.

[*Comment:* If collected leachate or run-off is discharged through a point source to waters of the United States, it is subject to the requirements of section 402 of the Clean Water Act, as amended.]

[45 FR 33232, May 19, 1980, as amended at 47 FR 32367, July 26, 1982]

§ 265.254 Design requirements.

The owner or operator of a waste pile is subject to the requirements for liners and leachate collection systems or equivalent protection provided in § 264.251 of this chapter, with respect to each new unit, replacement of an existing unit, or lateral expansion of an existing unit that is within the area indentified in the Part A permit application, and with respect to waste received beginning May 8, 1985.

[50 FR 28750, July 15, 1985]

§ 265.255 [Reserved]

§ 265.256 Special requirements for ignitable or reactive waste.

(a) Ignitable or reactive wastes must not be placed in a pile, *unless:*

(1) Addition of the waste to an existing pile (i) results in the waste or mixture no longer meeting the definition of ignitable or reactive waste under § 261.21 or § 261.23 of this chapter, and (ii) complies with § 265.17(b); or

(2) The waste is managed in such a way that it is protected from any material or conditions which may cause it to ignite or react.

§ 265.257 Special requirements for incompatible wastes.

(a) Incompatible wastes, or incompatible wastes and materials, (see Appendix V for examples) must not be placed in the same pile, unless § 265.17(b) is complied with.

(b) A pile of hazardous waste that is incompatible with any waste or other material stored nearby in other containers, piles, open tanks, or surface impoundments must be separated from the other materials, or protected from them by means of a dike, berm, wall, or other device.

[*Comment:* The purpose of this is to prevent fires, explosions, gaseous emissions, leaching, or other discharge of hazardous waste or hazardous waste constituents which could result from the contact or mixing of incompatible wastes or materials.]

(c) Hazardous waste must not be piled on the same area where incompatible wastes or materials were previously piled, unless that area has been decontaminated sufficiently to ensure compliance with § 265.17(b).

§ 265.258 Closure and post-closure care.

(a) At closure, the owner or operator must remove or decontaminate all waste residues, contaminated containment system components (liners, etc.), contaminated subsoils, and structures and equipment contaminated with waste and leachate, and manage them as hazardous waste unless § 261.3(d) of this chapter applies; or

(b) If, after removing or decontaminating all residues and making all reasonable efforts to effect removal or decontamination of contaminated components, subsoils, structures, and equipment as required in paragraph (a) of this section, the owner or operator finds that not all contaminated subsoils can be practicably removed or decontaminated, he must close the facility and perform post-closure care in accordance with the closure and post-closure requirements that apply to landfills (§ 265.310).

[47 FR 32368, July 26, 1982]

Subpart M—Land Treatment

§ 265.270 Applicability.

The regulations in this subpart apply to owners and operators of hazardous waste land treatment facilities, except as § 265.1 provides otherwise.

§ 265.271 [Reserved]

§ 265.272 General operating requirements.

(a) Hazardous waste must not be placed in or on a land treatment facility unless the waste can be made less hazardous or nonhazardous by degradation, transformation, or immobilization processes occurring in or on the soil.

(b) The owner or operator must design, construct, operate, and maintain a run-on control system capable of preventing flow onto the active portions of the facility during peak discharge from at least a 25-year storm.

(c) The owner or operator must design, construct, operate, and maintain a run-off management system capable of collecting and controlling a water volume at least equivalent to a 24-hour, 25-year storm.

(d) Collection and holding facilities (e.g., tanks or basins) associated with run-on and run-off control systems must be emptied or otherwise managed expeditiously after storms to maintain design capacity of the system.

(e) If the treatment zone contains particulate matter which may be subject to wind dispersal, the owner or operator must manage the unit to control wind dispersal.

[45 FR 33232, May 19, 1980, as amended at 47 FR 32368, July 26, 1982; 50 FR 16048, Apr. 23, 1985]

§ 265.273 Waste analysis.

In addition to the waste analyses required by § 265.13, before placing a hazardous waste in or on a land treatment facility, the owner or operator must:

(a) Determine the concentrations in the waste of any substances which exceed the maximum concentrations contained in Table I of § 261.24 of this chapter that cause a waste to exhibit the EP toxicity characteristic;

(b) For any waste listed in Part 261, Subpart D, of this chapter, determine the concentrations of any substances which caused the waste to be listed as a hazardous waste; and

(c) If food chain crops are grown, determine the concentrations in the waste of each of the following constituents: arsenic, cadmium, lead, and mercury, *unless* the owner or operator has written, documented data that show that the constituent is not present.

[*Comment:* Part 261 of this chapter specifies the substances for which a waste is listed as a hazardous waste. As required by § 265.13, the waste analysis plan must include analyses needed to comply with §§ 265.281 and 265.282. As required by § 265.73, the owner or operator must place the results from each waste analysis, or the documented information, in the operating record of the facility.]

comply with the following general operating requirements:

(1) Treatment or storage of hazardous waste in tanks must comply with § 265.17(b).

(2) Hazardous wastes or treatment reagents must not be placed in a tank if they could cause the tank or its inner liner to rupture, leak, corrode, or otherwise fail before the end of its intended life.

(3) Uncovered tanks must be operated to ensure at least 60 centimeters (2 feet) of freeboard, unless the tank is equipped with a containment structure (e.g., dike or trench), a drainage control system, or a diversion structure (e.g., standby tank) with a capacity that equals or exceeds the volume of the top 60 centimeters (2 feet) of the tank.

(4) Where hazardous waste is continuously fed into a tank, the tank must be equipped with a means to stop this inflow (e.g., waste feed cutoff system or by-pass system to a stand-by tank).

NOTE: These systems are intended to be used in the event of a leak or overflow from the tank due to a system failure (e.g., a malfunction in the treatment process, a crack in the tank, etc.).

(c) Generators of between 100 and 1,000 kg/mo accumulating hazardous waste in tanks must inspect, where present:

(1) Discharge control equipment (e.g., waste feed cutoff systems, bypass systems, and drainage systems) at least once each operating day, to ensure that it is in good working order;

(2) Data gathered from monitoring equipment (e.g., pressure and temperature gauges) at least once each operating day to ensure that the tank is being operated according to its design;

(3) The level of waste in the tank at least once each operating day to ensure compliance with § 265.192(c);

(4) The construction materials of the tank at least weekly to detect corrosion or leaking of fixtures or seams; and

(5) The construction materials of, and the area immediately surrounding, discharge confinement structures (e.g., dikes) at least weekly to detect erosion or obvious signs of leakage (e.g., wet spots or dead vegetation).

NOTE: As required by § 265.15(c), the owner or operator must remedy any deterioration or malfunction he finds.

(d) Generators of between 100 and 1,000 kg/mo accumulating hazardous waste in tanks must, upon closure of the facility, remove all hazardous waste from tanks, discharge control equipment, and discharge confinement structures.

NOTE: At closure, as throughout the operating period, unless the owner or operator can demonstrate, in accordance with § 261.3(c) or (d) of this chapter, that any solid waste removed from his tank is not a hazardous waste, the owner or operator becomes a generator of hazardous waste and must manage it in accordance with all applicable requirements of Parts 262, 263, and 265 of this chapter.

(e) Generators of between 100 and 1,000 kg/mo must comply with the following special requirements for ignitable or reactive waste:

(1) Ignitable or reactive waste must not be placed in a tank, unless:

(i) The waste is treated, rendered, or mixed before or immediately after placement in a tank so that (A) the resulting waste, mixture, or dissolution of material no longer meets the definition of ignitable or reactive waste under § 261.21 or § 261.23 of this chapter, and (B) § 265.17(b) is complied with; or

(ii) The waste is stored or treated in such a way that it is protected from any material or conditions that may cause the waste to ignite or react; or

(iii) The tank is used solely for emergencies.

(2) The owner or operator of a facility which treats or stores ignitable or reactive waste in covered tanks must comply with the buffer zone requirements for tanks contained in Tables 2-1 through 2-6 of the National Fire Protection Association's "Flammable and Combustible Liquids Code," (1977 or 1981) (incorporated by reference, see § 260.11).

(f) Generators of between 100 and 1,000 kg/mo must comply with the following special requirements for incompatible wastes:

(1) Incompatible wastes, or incompatible wastes and materials, (see Appendix V for examples) must not be placed in the same tank, unless § 265.17(b) is complied with.

(2) Hazardous waste must not be placed in an unwashed tank which previously held an incompatible waste or material, unless § 265.17(b) is complied with.

Subpart K—Surface Impoundments

§ 265.220 Applicability.

The regulations in this subpart apply to owners and operators of facilities that use surface impoundments to treat, store, or dispose of hazardous waste, except as § 265.1 provides otherwise.

§ 265.221 Design requirements.

(a) The owner or operator of a surface impoundment must install two or more liners and leachate collection system in accordance with § 264.221(c) of this chapter, with respect to each new unit, replacement of an existing unit, or lateral expansion of an existing unit that is within the area identified in the Part A permit application, and with respect to waste received beginning May 8, 1985.

(b) The owner or operator of each unit referred to in paragraph (a) of this section must notify the Regional Administrator at least sixty days prior to receiving waste. The owner or operator of each facility submitting notice must file a Part B application within six months of the receipt of such notice.

(c) Paragraph (a) of this section will not apply if the owner or operator demonstrates to the Regional Administrator, and the Regional Administrator finds for such surface impoundment, that alternative design and operating practices, together with location characteristics, will prevent the migration of any hazardous constituent into the ground water or surface water at least as effectively as such liners and leachate collection systems.

(d) The double liner requirement set forth in paragraph (a) of this section may be waived by the Regional Administrator for any monofill, if:

(1) The monofill contains only hazardous wastes from foundry furnace emission controls or metal casting molding sand, and such wastes do not contain constituents which would render the wastes hazardous for reasons other than the EP toxicity characteristics in § 261.24 of this chapter; and

(2)(i)(A) The monofill has at least one liner for which there is no evidence that such liner in leaking. For the purposes of this paragraph the term "liner" means a liner designed, constructed, installed, and operated to prevent hazardous waste from passing into the liner at any time during the active life of the facility, or a liner designed, constructed, installed, and operated to prevent hazardous waste from migrating beyond the liner to adjacent subsurface soil, ground water, or surface water at any time during the active life of the facility. In the case of any surface impoundment which has been exempted from the requirements of paragraph (a) of this section on the basis of a liner designed, constructed, installed, and operated to prevent hazardous waste from passing beyond the liner, at the closure of such impoundment the owner or operator must remove or decontaminate all waste residues, all contaminated liner material, and contaminated soil to the extent practicable. If all contaminated soil it is not removed or decontaminated, the owner of operator of such impoundment must comply with appropriate post-closure requirements, including but not limited to ground-water monitoring and corrective action;

(B) The monofill is located more than one-quarter mile from an underground source of drinking water (as that term is defined in § 144.3 of this chapter); and

(C) The monofill is in compliance with generally applicable groundwater monitoring requirements for facilities with permits under RCRA section 3005(c); or

(ii) The owner or operator demonstrates that the monofill is located, designed and operated so as to assure that there will be no migration of any hazardous constituent into ground water or surface water at any future time.

(e) In the case of any unit in which the liner and leachate collection system has been installed pursuant to

(3) Control of the release of airborne particulate contaminants caused by wind erosion; and

(4) Compliance with § 265.276 concerning the gowth of food-chain crops.

(b) The owner or operator must consider at least the following factors in addressing the closure and post-closure care objectives of paragraph (a) of this section:

(1) Type and amount of hazardous waste and hazardous waste constituents applied to the land treatment facility;

(2) The mobility and the expected rate of migration of the hazardous waste and hazardous waste constituents;

(3) Site location, topography, and surrounding land use, with respect to the potential effects of pollutant migration (e.g., proximity to ground water, surface water and drinking water sources);

(4) Climate, including amount, frequency, and pH of precipitation;

(5) Geological and soil profiles and surface and subsurface hydrology of the site, and soil characteristics, including cation exchange capacity, total organic carbon, and pH;

(6) Unsaturated zone monitoring information obtained under § 265.278; and

(7) Type, concentration, and depth of migration of hazardous waste constituents in the soil as compared to their background concentrations.

(c) The owner or operator must consider at least the following methods in addressing the closure and post-closure care objectives of paragraph (a) of this section:

(1) Removal of contaminated soils;

(2) Placement of a final cover, considering:

(i) Functions of the cover (e.g., infiltration control, erosion and run-off control, and wind erosion control); and

(ii) Characteristics of the cover, including material, final surface contours, thickness, porosity and permeability, slope, length of run of slope, and type of vegetation on the cover; and

(3) Monitoring of ground water.

(d) In addition to the requirements of Subpart G of this part, during the closure period the owner or operator of a land treatment facility must:

(1) Continue unsaturated zone monitoring in a manner and frequency specified in the closure plan, except that soil pore liquid monitoring may be terminated 90 days after the last application of waste to the treatment zone;

(2) Maintain the run-on control system required under § 265.272(b);

(3) Maintain the run-off management system required under § 265.272(c); and

(4) Control wind dispersal of particulate matter which may be subject to wind dispersal.

(e) For the purpose of complying with § 265.115, when closure is completed the owner or operator may submit to the Regional Administrator certification both by the owner or operator and by an independent qualified soil scientist, in lieu of an independent registered professional engineer, that the facility has been closed in accordance with the specifications in the approved closure plan.

(f) In addition to the requirements of § 265.117, during the post-closure care period the owner or operator of a land treatment unit must:

(1) Continue soil-core monitoring by collecting and analyzing samples in a manner and frequency specified in the post-closure plan;

(2) Restrict access to the unit as appropriate for its post-closure use;

(3) Assure that growth of food chain crops complies with § 265.276; and

(4) Control wind dispersal of hazardous waste.

[45 FR 33232, May 19, 1980, as amended at 47 FR 32368, July 26, 1982]

§ 265.281 Special requirements for ignitable or reactive waste.

Ignitable or reactive waste must not be land treated unless:

(a) The waste is immediately incorporated into the soil so that:

(1) The resulting waste, mixture, or dissolution of material no longer meets the definition of ignitable or reactive waste under § 265.21 or § 261.23 of this chapter; and

(2) Section 264.17(b) is complied with; or

(b) The waste is managed in such a way that it is protected from any material or conditions which may cause it to ignite or react.

[47 FR 32368, July 26, 1982]

§ 265.282 Special requirements for incompatible wastes.

Incompatible wastes, or incompatible wastes and materials (see Appendix V for examples), must not be placed in the same land treatment area, unless § 265.17(b) is complied with.

Subpart N—Landfills

§ 265.300 Applicability.

The regulations in this subpart apply to owners and operators of facilities that dispose of hazardous waste in landfills, except as § 265.1 provides otherwise. A waste pile used as a disposal facility is a landfill and is governed by this subpart.

§ 265.301 Design requirements.

(a) The owner or operator of a landfill must install two or more liners and leachate collection systems above and between such liners in accordance with § 264.301(c) of this chapter, with respect to each new unit, replacement of an existing unit, or lateral expansion of an existing unit that is within the area identified in the Part A permit application, and with respect to waste received beginning May 8, 1985.

(b) The owner or operator of each unit referred to in paragraph (a) of this section must notify the Regional Administrator at least sixty days prior to receiving waste. The owner or operator of each facility submitting notice must file a Part B application within six months of the receipt of such notice.

(c) Paragraph (a) of this section will not apply if the owner or operator demonstrates to the Regional Administrator, and the Regional Administrator finds for such landfill, that alternative design and operating practices, together with location characteristics, will prevent the migration of any hazardous constituent into the ground water or surface water at least as effectively as such liners and leachate collection systems.

(d) The double liner requirement set forth in paragraph (a) of this section may be waived by the Regional Administrator for any monofill, if:

(1) The monofill contains only hazardous wastes from foundry furnace emission controls or metal casting molding sand, and such wastes do not contain constituents which would render the wastes hazardous for reasons other than the EP toxicity characteristics in § 261.24 of this chapter; and

(2)(i)(A) The monofill has at least one liner for which there is no evidence that such liner is leaking;

(B) The monofill is located more than one-quarter mile from an underground source of drinking water (as that term is defined in § 144.3 of this chapter); and

(C) The monofill is in compliance with generally applicable groundwater monitoring requirements for facilities with permits under RCRA section 3005(c); or

(ii) The owner or operator demonstrates that the monofill is located, designed and operated so as to assure that there will be no migration of any hazardous constituent into ground water or surface water at any future time.

(e) In the case of any unit in which the liner and leachate collection system has been installed pursuant to the requirements of paragraph (a) of this section and in good faith compliance with paragraph (a) of this section and with guidance documents governing liners and leachate collection systems under paragraph (a) of this section, no liner or leachate collection system which is different from that which was so installed pursuant to paragraph (a) of this section will be required for such unit by the Regional Administrator when issuing the first permit to such facility, except that the Regional Administrator will not be precluded from requiring installation of a new liner when the Regional Administrator has reason to believe that any liner installed pursuant to the requirements of paragraph (a) of this section is leaking.

§§ 265.274—265.275 [Reserved]

§ 265.276 Food chain crops.

(a) An owner or operator of a hazardous waste land treatment facility on which food chain crops are being grown, or have been grown and will be grown in the future, must notify the Regional Administrator within 60 days after the effective date of this part.

[*Comment:* The growth of food chain crops at a facility which has never before been used for this purpose is a significant change in process under § 122.72(c) of this chapter. Owners or operators of such land treatment facilities who propose to grow food chain crops after the effective date of this part must comply with § 122.72(c) of this chapter.]

(b)(1) Food chain crops must not be grown on the treated area of a hazardous waste land treatment facility unless the owner or operator can demonstrate, based on field testing, that any arsenic, lead, mercury, or other constituents identified under § 265.273(b):

(i) Will not be transferred to the food portion of the crop by plant uptake or direct contact, and will not otherwise be ingested by food chain animals (e.g., by grazing); or

(ii) Will not occur in greater concentrations in the crops grown on the land treatment facility than in the same crops grown on untreated soils under similar conditions in the same region.

(2) The information necessary to make the demonstration required by paragraph (b)(1) of this section must be kept at the facility and must, at a minimum:

(i) Be based on tests for the specific waste and application rates being used at the facility; and

(ii) Include descriptions of crop and soil characteristics, sample selection criteria, sample size determination, analytical methods, and statistical procedures.

(c) Food chain crops must not be grown on a land treatment facility receiving waste that contains cadmium unless all requirements of paragraphs (c)(1)(i) through (iii) of this section or all requirements of paragraphs (c)(2)(i) through (iv) of this section are met

(1)(i) The pH of the waste and soil mixture is 6.5 or greater at the time of each waste application, except for waste containing cadmium at concentrations of 2 mg/kg (dry weight) or less;

(ii) The annual application of cadmium from waste does not exceed 0.5 kilograms per hectare (kg/ha) on land used for production of tobacco, leafy vegetables, or root crops grown for human consumption. For other food chain crops, the annual cadmium application rate does not exceed:

Time period	Annual Cd application rate (kg/ha)
Present to June 30, 1984	2.0
July 1, 1984 to December 31, 1986	1.25
Beginning January 1, 1987	0.5

(iii) The cumulative application of cadmium from waste does not exceed the levels in either paragraph (c)(1)(iii)(A) or (B) of this section.

(A)

Soil caption exchange capacity (meq/100g)	Maximum cumulative application (kg/ha)	
	Background soil pH less than 6.5	Background soil pH greater than 6.5
Less than 5	5	5
5 to 15	5	10
Greater than 15	5	20

(B) For soils with a background pH of less than 6.5, the cumulative cadmium application rate does not exceed the levels below: *Provided*, that the pH of the waste and soil mixture is adjusted to and maintained at 6.5 or greater whenever food chain crops are grown.

Soil caption exchange capacity (meq/100g)	Maximum cumulative application (kg/ha)
Less than 5	5
5 to 15	10
Greater than 15	20

(2)(i) The only food chain crop produced is animal feed

(ii) The pH of the waste and soil mixture is 6.5 or greater at the time of waste application or at the time the crop is planted, whichever occurs later, and this pH level is maintained whenever food chain crops are grown.

(iii) There is a facility operating plan which demonstrates how the animal feed will be distributed to preclude ingestion by humans. The facility operating plan describes the measures to be taken to safeguard against possible health hazards from cadmium entering the food chain, which may result from alternative land uses.

(iv) Future property owners are notified by a stipulation in the land record or property deed which states that the property has received waste at high cadmium application rates and that food chain crops must not be grown except in compliance with paragraph (c)(2) of this section.

[*Comment:* As required by § 265.73, if an owner or operator grows food chain crops on his land treatment facility, he must place the information developed in this section in the operating record of the facility.]

[45 FR 33232, May 19, 1980, as amended at 47 FR 32368, July 26, 1982; 48 FR 14295, Apr. 1, 1983]

§ 265.277 [Reserved]

§ 265.278 Unsaturated zone (zone of aeration) monitoring.

(a) The owner or operator must have in writing, and must implement, an unsaturated zone monitoring plan which is designed to:

(1) Detect the vertical migration of hazardous waste and hazardous waste constituents under the active portion of the land treatment facility, and

(2) Provide information on the background concentrations of the hazardous waste and hazardous waste constituents in similar but untreated soils nearby; this background monitoring must be conducted before or in conjunction with the monitoring required under paragraph (a)(1) of this section.

(b) The unsaturated zone monitoring plan must include, at a minimum:

(1) Soil monitoring using soil cores, and

(2) Soil-pore water monitoring using devices such as lysimeters.

(c) To comply with paragraph (a)(1) of this section, the owner or operator must demonstrate in his unsaturated zone monitoring plan that:

(1) The depth at which soil and soil-pore water samples are to be taken is below the depth to which the waste is incorporated into the soil;

(2) The number of soil and soil-pore water samples to be taken is based on the variability of:

(i) The hazardous waste constituents (as identified in § 265.273(a) and (b)) in the waste and in the soil; and

(ii) The soil type(s); and

(3) The frequency and timing of soil and soil-pore water sampling is based on the frequency, time, and rate of waste application, proximity to ground water, and soil permeability.

(d) The owner or operator must keep at the facility his unsaturated zone monitoring plan, and the rationale used in developing this plan.

(e) The owner or operator must analyze the soil and soil-pore water samples for the hazardous waste constituents that were found in the waste during the waste analysis under § 265.273 (a) and (b).

[*Comment:* As required by § 265.73, all data and information developed by the owner or operator under this section must be placed in the operating record of the facility.]

§ 265.279 Recordkeeping.

The owner or operator must include hazardous waste application dates and rates in the operating record required under § 265.73.

[47 FR 32368, July 26, 1982]

§ 265.280 Closure and post-closure.

(a) In the closure plan under § 265.112 and the post-closure plan under § 265.118, the owner or operator must address the following objectives and indicate how they will be achieved:

(1) Control of the migration of hazardous waste and hazardous waste constituents from the treated area into the ground water;

(2) Control of the release of contaminated run-off from the facility into surface water;

(a) At least 90 percent full when placed in the landfill; or

(b) Crushed, shredded, or similarly reduced in volume to the maximum practical extent before burial in the landfill.

[50 FR 16048, Apr. 23, 1985]

§ 265.316 Disposal of small containers of hazardous waste in overpacked drums (lab packs).

Small containers of hazardous waste in overpacked drums (lab packs) may be placed in a landfill if the following requirements are met:

(a) Hazardous waste must be packaged in non-leaking inside containers. The inside containers must be of a design and constructed of a material that will not react dangerously with, be decomposed by, or be ignited by the waste held therein. Inside containers must be tightly and securely sealed. The inside containers must be of the size and type specified in the Department of Transportation (DOT) hazardous materials regulations (49 CFR Parts 173, 178 and 179), if those regulations specify a particular inside container for the waste.

(b) The inside containers must be overpacked in an open head DOT-specification metal shipping container (49 CFR Parts 178 and 179) of no more than 416-liter (110 gallon) capacity and surrounded by, at a minimum, a sufficient quantity of absorbent material to completely absorb all of the liquid contents of the inside containers. The metal outer container must be full after packing with inside containers and absorbent material.

(c) The absorbent material used must not be capable of reacting dangerously with, being decomposed by, or being ignited by the contents of the inside containers, in accordance with § 265.17(b).

(d) Incompatible wastes, as defined in § 260.10(a) of this chapter, must not be placed in the same outside container.

(e) Reactive waste, other than cyanide- or sulfide-bearing waste as defined in § 261.23(a)(5) of this chapter, must be treated or rendered non-reactive prior to packaging in accordance with paragraphs (a) through (d) of this section. Cyanide- and sulfide-bearing reactive waste may be packaged in accordance with paragraphs (a) through (d) of this section without first being treated or rendered non-reactive.

[46 FR 56596, Nov. 17, 1981]

Subpart O—Incinerators

SOURCE: 46 FR 7680, Jan. 23, 1981, unless otherwise noted.

§ 265.340 Applicability.

(a) The regulations in this subpart apply to owners or operators of facilities that incinerate hazardous waste, except as § 264.1 provides otherwise. The following facility owners or operators are considered to incinerate hazardous waste:

(1) Owners or operators of hazardous waste incinerators (as defined in § 260.10 of this chapter); and

(2) Owners or operators who burn hazardous waste in boilers or in industrial furnaces in order to destroy them, or who burn hazardous waste in boilers or in industrial furnaces for any recycling purpose and elect to be regulated under this subpart.

(b) Owners and operators of incinerators burning hazardous waste are exempt from all of the requirements of this subpart, except § 265.351 (Closure), provided that the owner or operator has documented, in writing, that the waste would not reasonably be expected to contain any of the hazardous constituents listed in Part 261, Appendix VIII, of this chapter, and such documentation is retained at the facility, if the waste to be burned is:

(1) Listed as a hazardous waste in Part 261, Subpart D, of this chapter solely because it is ignitable (Hazard Code I), corrosive (Hazard Code C), or both; or

(2) Listed as a hazardous waste in Part 261, Subpart D, of this chapter solely because it is reactive (Hazard Code R) for characteristics other than those listed in § 261.23(a) (4) and (5), and will not be burned when other hazardous wastes are present in the combustion zone; or

(3) A hazardous waste solely because it possesses the characteristic of ignitability, corrosivity, or both, as determined by the tests for characteristics of hazardous wastes under Part 261, Subpart C, of this chapter; or

(4) A hazardous waste solely because it possesses the reactivity characteristics described by § 261.23(a) (1), (2), (3), (6), (7), or (8) of this chapter, and will not be burned when other hazardous wastes are present in the combustion zone.

[47 FR 27533, June 24, 1982 and 50 FR 666, Jan. 4, 1985, as amended at 50 FR 49203, Nov. 29, 1985]

§ 265.341 Waste analysis.

In addition to the waste analyses required by § 265.13, the owner or operator must sufficiently analyze any waste which he has not previously burned in his incinerator to enable him to establish steady state (normal) operating conditions (including waste and auxiliary fuel feed and air flow) and to determine the type of pollutants which might be emitted. At a minimum, the analysis must determine:

(a) Heating value of the waste;

(b) Halogen content and sulfur content in the waste; and

(c) Concentrations in the waste of lead and mercury, unless the owner or operator has written, documented data that show that the element is not present.

[*Comment:* As required by § 265.73, the owner or operator must place the results from each waste analysis, or the documented information, in the operating record of the facility.]

§§ 265.342—265.344 [Reserved]

§ 265.345 General operating requirements.

During start-up and shut-down of an incinerator, the owner or operator must not feed hazardous waste unless the incinerator is at steady state (normal) conditions of operation, including steady state operating temperature and air flow.

§ 265.346 [Reserved]

§ 265.347 Monitoring and inspections.

The owner or operator must conduct, as a minimum, the following monitoring and inspections when incinerating hazardous waste:

(a) Existing instruments which relate to combustion and emission control must be monitored at least every 15 minutes. Appropriate corrections to maintain steady state combustion conditions must be made immediately either automatically or by the operator. Instruments which relate to combustion and emission control would normally include those measuring waste feed, auxiliary fuel feed, air flow, incinerator temperature, scrubber flow, scrubber pH, and relevant level controls.

(b) The complete incinerator and associated equipment (pumps, valves, conveyors, pipes, etc.) must be inspected at least daily for leaks, spills, and fugitive emissions, and all emergency shutdown controls and system alarms must be checked to assure proper operation.

[46 FR 7678, Jan. 23, 1981, as amended at 47 FR 27533, June 24, 1982]

§§ 265.348—265.350 [Reserved]

§ 265.351 Closure.

At closure, the owner or operator must remove all hazardous waste and hazardous waste residues (including but not limited to ash, scrubber waters, and scrubber sludges) from the incinerator.

[*Comment:* At closure, as throughout the operating period, unless the owner or operator can demonstrate, in accordance with § 261.3(d) of this chapter, that the residue removed from his incinerator is not a hazardous waste, the owner or operator becomes a generator of hazardous waste and must manage it in accordance with all applicable requirements of Parts 262 through 266 of this chapter.]

§ 265.352 Interim status incinerators burning particular hazardous wastes.

(a) Owners or operators of incinerators subject to this subpart may burn EPA Hazardous Wastes FO20, FO21, FO22, FO23, FO26, or FO27 if they receive a certification from the Assistant Administrator for Solid Waste and Emergency Response that they can meet the performance standards of Subpart O of Part 264 when they burn these wastes.

[50 FR 28750, July 15, 1985]

§ 265.302 General operating requirements.

(a) The owner or operator must design, construct, operate, and maintain a run-on control system capable of preventing flow onto the active portion of the landfill during peak discharge from at least a 25-year storm.

(b) The owner or operator must design, construct, operate and maintain a run-off management system to collect and control at least the water volume resulting from a 24-hour, 25-year storm.

(c) Collection and holding facilities (e.g., tanks or basins) associated with run-on and run-off control systems must be emptied or otherwise managed expeditiously after storms to maintain design capacity of the system.

(d) The owner or operator of a landfill containing hazardous waste which is subject to dispersal by wind must cover or otherwise manage the landfill so that wind dispersal of the hazardous waste is controlled.

[*Comment*: As required by § 265.13, the waste analysis plan must include analyses needed to comply with §§ 265.312, 265.313, and 265.314. As required by § 265.73, the owner or operator must place the results of these analyses in the operating record of the facility.]

[45 FR 33232, May 19, 1980, as amended at 47 FR 32368, July 26, 1982; 50 FR 18374, Apr. 30, 1985]

§§ 265.303—265.308 [Reserved]

§ 265.309 Surveying and recordkeeping.

The owner or operator of a landfill must maintain the following items in the operating record required in § 265.73:

(a) On a map, the exact location and dimensions, including depth, of each cell with respect to permanently surveyed benchmarks; and

(b) The contents of each cell and the approximate location of each hazardous waste type within each cell.

§ 265.310 Closure and post-closure care.

(a) At final closure of the landfill or upon closure of any cell, the owner or operator must cover the landfill or cell with a final cover designed and constructed to:

(1) Provide long-term minimization of migration of liquids through the closed landfill;

(2) Function with minimum maintenance;

(3) Promote drainage and minimize erosion or abrasion of the cover;

(4) Accommodate settling and subsidence so that the cover's integrity is maintained; and

(5) Have a permeability less than or equal to the permeability of any bottom liner system or natural subsoils present.

(b) After final closure, the owner or operator must comply with all post-closure requirements contained in §§ 265.117 through 265.120 including maintenance and monitoring throughout the post-closure care period. The owner or operator must:

(1) Maintain the integrity and effectiveness of the final cover, including making repairs to the cover as necessary to correct the effects of settling, subsidence, erosion, or other events;

(2) Maintain and monitor the ground-water monitoring system and comply with all other applicable requirements of Subpart F of this part;

(3) Prevent run-on and run-off from eroding or otherwise damaging the final cover; and

(4) Protect and maintain surveyed benchmarks used in complying with § 265.309.

[50 FR 16048, Apr. 23, 1985]

§ 265.311 [Reserved]

§ 265.312 Special requirements for ignitable or reactive waste.

(a) Except as provided in paragraph (b) of this section, and in § 265.316, ignitable or reactive waste must not be placed in a landfill, unless the waste is treated, rendered, or mixed before or immediately after placement in a landfill so that:

(1) The resulting waste, mixture, or dissolution or material no longer meets the definition of ignitable or reactive waste under § 261.21 or § 261.23 of this chapter; and

(2) Section 265.17(b) is complied with.

(b) Ignitable wastes in containers may be landfilled without meeting the requirements of paragraph (a) of this section provided that the wastes are disposed in such a way that they are protected from any material or conditions which may cause them to ignite. At a minimum, ignitable wastes must be disposed in non-leaking containers which are carefully handled and placed so as to avoid heat, sparks, rupture, or any other condition that might cause ignition of the wastes; must be covered daily with soil or other non-combustible material to minimize the potential for ignition of the wastes; and must not be disposed in cells that contain or will contain other wastes which may generate heat sufficient to cause ignition of the waste.

[47 FR 32368, July 26, 1982]

§ 265.313 Special requirements for incompatible wastes.

Incompatible wastes, or incompatible wastes and materials, (see Appendix V for examples) must not be placed in the same landfill cell, unless § 265.17(b) is complied with.

§ 265.314 Special requirements for bulk and containerized liquids.

(a) Bulk or non-containerized liquid waste or waste containing free liquids may be placed in a landfill prior to May 8, 1985 only if:

(1) The landfill has a liner and leachate collection and removal system that meets the requirements of § 264.301(a) of this chapter; or

(2) Before disposal, the liquid waste or waste containing free liquids is treated or stabilized, chemically or physically (e.g., by mixing with an absorbent solid), so that free liquids are no longer present.

(b) Effective May 8, 1985, the placement of bulk or non-containerized liquid hazardous waste or hazardous waste containing free liquids (whether or not absorbents have been added) in any landfill is prohibited.

(c) Containers holding free liquids must not be placed in a landfill unless:

(1) All free-standing liquid (i) has been removed by decanting, or other methods, (ii) has been mixed with absorbent or solidified so that free-standing liquid is no longer observed or (iii) had been otherwise eliminated; or

(2) The container is very small, such as an ampule; or

(3) The container is designed to hold free liquids for use other than storage, such as a battery or capacitor; or

(4) The container is a lab pack as defined in § 265.316 and is disposed of in accordance with § 265.316.

(d) To demonstrate the absence or presence of free liquids in either a containerized or a bulk waste, the following test must be used: Method 9095 (Paint Filter Liquids Test) as described in "Test Methods for Evaluating Solid Wastes, Physical/Chemical Methods." [EPA Publication No. SW-846].

(e) The date for compliance with paragraph (a) of this section is November 19, 1981. The date for compliance with paragraph (c) of this section is March 22, 1982.

(f) Effective November 8, 1985, the placement of any liquid which is not a hazardous waste in a landfill is prohibited unless the owner or operator of such landfill demonstrates to the Regional Administrator, or the Regional Administrator determines, that:

(1) The only reasonably available alternative to the placement in such landfill is placement in a landfill or unlined surface impoundment, whether or not permitted or operating under interim status, which contains, or may reasonably be anticipated to contain, hazardous waste; and

(2) Placement in such owner or operator's landfill will not present a risk of contamination of any underground source of drinking water (as that term is defined in § 144.3 of this chapter).

(Approved by the Office of Management and Budget under control number 2050-0037)

[45 FR 33232, May 19, 1980, as amended at 47 FR 12318, Mar. 22, 1982; 47 FR 32369, July 26, 1982; 50 FR 18374, Apr. 30, 1985; 50 FR 28750, July 15, 1985; 51 FR 19177, May 28, 1986]

§ 265.315 Special requirements for containers.

Unless they are very small, such as an ampule, containers must be either:

or not to certify the thermal treatment unit.

[50 FR 2005, Jan. 14, 1985]

Subpart Q—Chemical, Physical, and Biological Treatment

§ 265.400 Applicability.

The regulations in this subpart apply to owners and operators of facilities which treat hazardous wastes by chemical, physical, or biological methods in other than tanks, surface impoundments, and land treatment facilities, except as § 265.1 provides otherwise. Chemical, physical, and biological treatment of hazardous waste in tanks, surface impoundments, and land treatment facilities must be conducted in accordance with Subparts J, K, and M, respectively.

§ 265.401 General operating requirements.

(a) Chemical, physical, or biological treatment of hazardous waste must comply with § 265.17(b).

(b) Hazardous wastes or treatment reagents must not be placed in the treatment process or equipment if they could cause the treatment process or equipment to rupture, leak, corrode, or otherwise fail before the end of its intended life.

(c) Where hazardous waste is continuously fed into a treatment process or equipment, the process or equipment must be equipped with a means to stop this inflow (e.g., a waste feed cut-off system or by-pass system to a standby containment device).

[*Comment:* These systems are intended to be used in the event of a malfunction in the treatment process or equipment.]

§ 265.402 Waste analysis and trial tests.

(a) In addition to the waste analysis required by § 265.13, whenever:

(1) A hazardous waste which is substantially different from waste previously treated in a treatment process or equipment at the facility is to be treated in that process or equipment, or

(2) A substantially different process than any previously used at the facility is to be used to chemically treat hazardous waste,

the owner or operator must, before treating the different waste or using the different process or equipment:

(i) Conduct waste analyses and trial treatment tests (e.g., bench scale or pilot plant scale tests); or

(ii) Obtain written, documented information on similar treatment of similar waste under similar operating conditions;

to show that this proposed treatment will meet all applicable requirements of § 265.401 (a) and (b).

[*Comment:* As required by § 265.13, the waste analysis plan must include analyses needed to comply with §§ 265.405 and 265.406. As required by § 265.73, the owner or operator must place the results from each waste analysis and trial test, or the documented information, in the operating record of the facility.]

§ 265.403 Inspections.

(a) The owner or operator of a treatment facility must inspect, where present:

(1) Discharge control and safety equipment (e.g., waste feed cut-off systems, by-pass systems, drainage systems, and pressure relief systems) at least once each operating day, to ensure that it is in good working order;

(2) Data gathered from monitoring equipment (e.g., pressure and temperature gauges), at least once each operating day, to ensure that the treatment process or equipment is being operated according to its design;

(3) The construction materials of the treatment process or equipment, at least weekly, to detect corrosion or leaking of fixtures or seams; and

(4) The construction materials of, and the area immediately surrounding, discharge confinement structures (e.g., dikes), at least weekly, to detect erosion or obvious signs of leakage (e.g., wet spots or dead vegetation).

[*Comment:* As required by § 265.15(c), the owner or operator must remedy any deterioration or malfunction he finds.]

§ 265.404 Closure.

At closure, all hazardous waste and hazardous waste residues must be removed from treatment processes or equipment, discharge control equipment, and discharge confinement structures.

[*Comment:* At closure, as throughout the operating period, unless the owner or operator can demonstrate, in accordance with § 261.3 (c) or (d) of this chapter, that any solid waste removed from his treatment process or equipment is not a hazardous waste, the owner or operator becomes a generator of hazardous waste and must manage it in accordance with all applicable requirements of Parts 262, 263, and 265 of this chapter.]

§ 265.405 Special requirements for ignitable or reactive waste.

(a) Ignitable or reactive waste must not be placed in a treatment process or equipment unless:

(1) The waste is treated, rendered, or mixed before or immediately after placement in the treatment process or equipment so that (i) the resulting waste, mixture, or dissolution of material no longer meets the definition of ignitable or reactive waste under § 261.21 or 261.23 or this chapter, and (ii) § 265.17(b) is complied with; or

(2) The waste is treated in such a way that it is protected from any material or conditions which may cause the waste to ignite or react.

§ 265.406 Special requirements for incompatible wastes.

(a) Incompatible wastes, or incompatible wastes and materials, (see Appendix V for examples) must not be placed in the same treatment process or equipment, unless § 265.17(b) is complied with.

(b) Hazardous waste must not be placed in unwashed treatment equipment which previously held an incompatible waste or material, unless § 265.17(b) is complied with.

Subpart R—Underground Injection

§ 265.430 Applicability.

Except as § 265.1 provides otherwise:

(a) The owner or operator of a facility which disposes of hazardous waste by underground injection is excluded from the requirements of Subparts G and H of this part.

(b) The requirements of this subpart apply to owners and operators of wells used to dispose of hazardous waste which are classified as Class I under § 144.6(a) of this chapter and which are classified as Class IV under § 144.6(d) of this chapter.

[*Comment:* In addition to the requirements of Subparts A through E of this part, the owner or operator of a facility which disposes of hazardous waste by underground injection ultimately must comply with the requirements of §§ 265.431 through 265.437. These sections are reserved at this time. The Agency will propose regulations that would establish those requirements.]

[45 FR 33232, May 19, 1980, as amended at 48 FR 30115, June 30, 1983]

Appendix I—Recordkeeping Instructions

The recordkeeping provisions of § 265.73 specify that an owner or operator must keep a written operating record at his facility. This appendix provides additional instructions for keeping *portions* of the operating record. See § 265.73(b) for additional recordkeeping requirements.

The following information must be recorded, as it becomes available, and maintained in the operating record until closure of the facility in the following manner:

Records of each hazardous waste received, treated, stored, or disposed of at the facility which include the following:

(1) A description by its common name and the EPA Hazardous Waste Number(s) from Part 261 of this chapter which apply to the waste. The waste description also must include the waste's physical form, i.e., liquid, sludge, solid, or contained gas. If the waste is not listed in Part 261, Subpart D, of this chapter, the description also must include the process that produced it (for example, solid filter cake from production of ——, EPA Hazardous Waste Number W051).

Each hazardous waste listed in Part 261, Subpart D, of this chapter, and each hazardous waste characteristic defined in Part 261, Subpart C, of this chapter, has a four-digit EPA Hazardous Waste Number assigned to it. This number must be used for recordkeeping and reporting purposes. Where a hazardous waste contains more than one listed hazardous waste, or where more than one hazardous waste characteristic applies to the waste, the waste description must include all applicable EPA Hazardous Waste Numbers.

(2) The estimated or manifest-reported weight, or volume and density, where applicable, in one of the units of measure specified in Table 1; and

(b) The following standards and procedures will be used in determining whether to certify an incinerator:

(1) The owner or operator will submit an application to the Assistant Administrator for Solid Waste and Emergency Response containing applicable information in §§ 270.19 and 270.62 demonstrating that the incinerator can meet the performance standards in Subpart O of Part 264 when they burn these wastes.

(2) The Assistant Administrator for Solid Waste and Emergency Response will issue a tentative decision as to whether the incinerator can meet the performance standards in Subpart O of Part 264. Notification of this tentative decision will be provided by newspaper advertisement and radio broadcast in the jurisdiction where the incinerator is located. The Assistant Administrator for Solid Waste and Emergency Response will accept comment on the tentative decision for 60 days. The Assistant Administrator for Solid Waste and Emergency Response also may hold a public hearing upon request or at his discretion.

(3) After the close of the public comment period, the Assistant Administrator for Solid Waste and Emergency Response will issue a decision whether or not to certify the incinerator.

[50 FR 2005, Jan. 14, 1985]

§§ 265.353—265.369 [Reserved]

Subpart P—Thermal Treatment

§ 265.370 Other thermal treatment.

The regulations in this subpart apply to owners or operators of facilities that thermally treat hazardous waste in devices other than enclosed devices using controlled flame combustion, except as § 265.1 provides otherwise. Thermal treatment in enclosed devices using controlled flame combustion is subject to the requirements of Subpart O if the unit is an incinerator.

[50 FR 666, Jan. 4, 1985]

§§ 265.371—265.372 [Reserved]

§ 265.373 General operating requirements.

Before adding hazardous waste, the owner or operator must bring his thermal treatment process to steady state (normal) conditions of operation—including steady state operating temperature—using auxiliary fuel or other means, unless the process is a non-continuous (batch) thermal treatment process which requires a complete thermal cycle to treat a discrete quantity of hazardous waste.

§ 265.374 [Reserved]

§ 265.375 Waste analysis.

In addition to the waste analyses required by § 265.13, the owner or operator must sufficiently analyze any waste which he has not previously treated in his thermal process to enable him to establish steady state (normal) or other appropriate (for a non-continuous process) operating conditions (including waste and auxiliary fuel feed) and to determine the type of pollutants which might be emitted. At a minimum, the analysis must determine:

(a) Heating value of the waste;

(b) Halogen content and sulfur content in the waste; and

(c) Concentrations in the waste of lead and mercury, *unless* the owner or operator has written, documented data that show that the element is not present.

[*Comment:* As required by § 265.73, the owner or operator must place the results from each waste analysis, or the documented information, in the operating record of the facility.]

§ 265.376 [Reserved]

§ 265.377 Monitoring and inspections.

(a) The owner or operator must conduct, as a minimum, the following monitoring and inspections when thermally treating hazardous waste:

(1) Existing instruments which relate to temperature and emission control (if an emission control device is present) must be monitored at least every 15 minutes. Appropriate corrections to maintain steady state or other appropriate thermal treatment conditions must be made immediately either automatically or by the operator. Instruments which relate to temperature and emission control would normally include those measuring waste feed, auxiliary fuel feed, treatment process temperature, and relevant process flow and level controls.

(2) The stack plume (emissions), where present, must be observed visually at least hourly for normal appearance (color and opacity). The operator must immediately make any indicated operating corrections necessary to return any visible emissions to their normal appearance.

(3) The complete thermal treatment process and associated equipment (pumps, valves, conveyors, pipes, etc.) must be inspected at least daily for leaks, spills, and fugitive emissions, and all emergency shutdown controls and system alarms must be checked to assure proper operation.

§§ 265.378—265.380 [Reserved]

§ 265.381 Closure.

At closure, the owner or operator must remove all hazardous waste and hazardous waste residues (including, but not limited to, ash) from the thermal treatment process or equipment.

[*Comment:* At closure, as throughout the operating period, unless the owner or operator can demonstrate, in accordance with § 261.3(c) or (d) of this chapter, that any solid waste removed from his thermal treatment process or equipment is not a hazardous waste, the owner or operator becomes a generator of hazardous waste and must manage it in accordance with all applicable requirements of Parts 262, 263, and 265 of this chapter.]

§ 265.382 Open burning; waste explosives.

Open burning of hazardous waste is prohibited except for the open burning and detonation of waste explosives. Waste explosives include waste which has the potential to detonate and bulk military propellants which cannot safely be disposed of through other modes of treatment. Detonation is an explosion in which chemical transformation passes through the material faster than the speed of sound (0.33 kilometers/second at sea level). Owners or operators choosing to open burn or detonate waste explosives must do so in accordance with the following table and in a manner that does not threaten human health or the environment.

Pounds of waste explosives or propellants	Minimum distance from open burning or detonation to the property of others
0 to 100	204 meters (670 feet).
101 to 1,000	380 meters (1,250 feet).
1,001 to 10,000	530 meters (1,730 feet).
10,001 to 30,000	690 meters (2,260 feet).

§ 265.383 Interim status thermal treatment devices burning particular hazardous waste.

(a) Owners or operators of thermal treatment devices subject to this subpart may burn EPA Hazardous Wastes FO20, FO21, FO22, FO23, FO26, or FO27 if they receive a certification from the Assistant Administrator for Solid Waste and Emergency Response that they can meet the performance standards of Subpart O of Part 264 when they burn these wastes.

(b) The following standards and procedures will be used in determining whether to certify a thermal treatment unit:

(1) The owner or operator will submit an application to the Assistant Administrator for Solid Waste and Emergency Response containing the applicable information in §§ 270.19 and 270.62 demonstrating that the thermal treatment unit can meet the performance standard in Subpart O of Part 264 when they burn these wastes.

(2) The Assistant Administrator for Solid Waste and Emergency Response will issue a tentative decision as to whether the thermal treatment unit can meet the performance standards in Subpart O of Part 264. Notification of this tentative decision will be provided by newspaper advertisement and radio broadcast in the jurisdiction where the thermal treatment device is located. The Assistant Administrator for Solid Waste and Emergency Response will accept comment on the tentative decision for 60 days. The Assistant Administrator for Solid Waste and Emergency Response also may hold a public hearing upon request or at his discretion.

(3) After the close of the public comment period, the Assistant Administrator for Solid Waste and Emergency Response will issue a decision whether

Group 1-A	Group 1-B
	Spent sulfuric acid

Potential consequences: Heat generation; violent reaction.

Group 2-A	Group 2-B
Aluminum Beryllium Calcium Lithium Magnesium Potassium Sodium Zinc powder Other reactive metals and metal hydrides	Any waste in Group 1-A or 1-B

Potential consequences: Fire or explosion; generation of flammable hydrogen gas.

Group 3-A	Group 3-B
Alcohols Water	Any concentrated waste in Groups 1-A or 1-B Calcium Lithium Metal hydrides Potassium SO_3Cl_2, $SOCl_2$, PCl_3, CH_3SiCl_3 Other water-reactive waste

Potential consequences: Fire, explosion, or heat generation, generation of flammable or toxic gases

Group 4-A	Group 4-B
Alcohols Aldehydes Halogenated hydrocarbons Nitrated hydrocarbons Unsaturated hydrocarbons Other reactive organic compounds and solvents	Concentrated Group 1-A or 1-B wastes Group 2-A wastes

Potential consequences: Fire, explosion, or violent reaction.

Group 5-A	Group 5-B
Spent cyanide and sulfide solutions	Group 1-B wastes

Potential consequences: Generation of toxic hydrogen cyanide or hydrogen sulfide gas.

Group 6-A	Group 6-B
Chlorates Chlorine Chlorites Chromic acid Hyphochlorites Nitrates Nitric acid, fuming Perchlorates Permanganates Peroxides Other strong oxidizers	Acetic acid and other organic acids Concentrated mineral acides Group 2-A wastes Group 4-A wastes Other flammable and combustible wastes

Potential consequences: Fire, explosion, or violent reaction.

Source: "Law, Regulations, and Guidelines for Handling of Hazardous Waste." California Department of Health, February 1975.

PART 266—STANDARDS FOR THE MANAGEMENT OF SPECIFIC HAZARDOUS WASTES AND SPECIFIC TYPES OF HAZARDOUS WASTE MANAGEMENT FACILITIES

Subparts A—B [Reserved]

Subpart C—Recyclable Materials Used in a Manner Constituting Disposal

Sec.
266.20 Applicability.
266.21 Standards applicable to generators and transporters of materials used in a manner that constitute disposal.
266.22 Standards applicable to storers of materials that are to be used in a manner that constitutes disposal who are not the ultimate users.
266.23 Standards applicable to users of materials that are used in a manner that constitutes disposal.

Subpart D—Hazardous Waste Burned for Energy Recovery

266.30 Applicability.
266.31 Prohibitions.
266.32 Standards applicable to generators of hazardous waste fuel.
266.33 Standards applicable to transporters of hazardous waste fuel.
266.34 Standards applicable to marketers of hazardous waste fuel.
266.35 Standards applicable to burners of hazardous waste fuel.

Subpart E—Used Oil Burned for Energy Recovery

266.40 Applicability.

266.41 Prohibitions.
266.42 Standards applicable to generators of used oil burned for energy recovery.
266.43 Standards applicable to marketers of used oil burned for energy recovery.
266.44 Standards applicable to burners of used oil burned for energy recovery.

Subpart F—Recyclable Materials Utilized for Precious Metal Recovery

266.70 Applicability and requirements.

Subpart G—Spent Lead-Acid Batteries Being Reclaimed

266.80 Applicability and requirements.

AUTHORITY: Secs. 1006, 2002(a), 3004, and 3014 of the Solid Waste Disposal Act, as amended by the Resource Conservation and Recovery Act of 1976, as amended (42 U.S.C. 6906, 6912(a), 6924, and 6934).

SOURCE: 50 FR 666, Jan. 4, 1985, unless otherwise noted.

Subparts A—B [Reserved]

Subpart C—Recyclable Materials Used in a Manner Constituting Disposal

§ 266.20 Applicability.

(a) The regulations of this subpart apply to recyclable materials that are applied to or placed on the land:

(1) Without mixing with any other substance(s); or

(2) After mixing or conmbination with any other substance(s). These materials will be referred to throughout this subpart as "materials used in a manner that constitutes disposal."

(b) Products produced for the general public's use that are used in a manner that constitutes disposal and that contain recyclable materials are not presently subject to regulation if the recyclable materials have undergone a chemical reaction in the course of producing the product so as to become inseparable by physical means. Commercial fertilizers that are produced for the general public's use that contain recyclable materials also are not presently subject to regulation.

[50 FR 666, Jan. 4, 1985, as amended at 52 FR 21307, June 5, 1987]

§ 266.21 Standards applicable to generators and transporters of materials used in a manner that constitute disposal.

Generators and transporters of materials that are used in a manner that constitutes disposal are subject to the applicable requirements of Parts 262 and 263 of this chapter, and the notification requirement under section 3010 of RCRA.

§ 266.22 Standards applicable to storers of materials that are to be used in a manner that constitutes disposal who are not the ultimate users.

Owners or operators of facilities that store recyclable materials that are to be used in a manner that constitutes disposal, but who are not the ultimate users of the materials, are regulated under all applicable provisions of Subparts A through L of Parts 264 and 265 and Parts 270 and 124 of this chapter and the notification requirement under section 3010 of RCRA.

§ 266.23 Standards applicable to users of materials that are used in a manner that constitutes disposal.

(a) Owners or operators of facilities that use recyclable materials in a manner that constitutes disposal are regulated under all applicable provisions of Subparts A through N of Parts 264 and 265 and Parts 270 and 124 of this chapter and the notification requirement under section 3010 of RCRA. (These requirements do not apply to products which contain these recyclable materials under the provisions of § 266.20(b) of this chapter.)

(b) The use of waste or used oil or other material, which is contaminated with dioxin or any other hazardous waste (other than a waste identified solely on the basis of ignitability), for dust suppression or road treatment is prohibited.

[50 FR 666, Jan. 4, 1985, as amended at 50 FR 28750, July 15, 1985]

Subpart D—Hazardous Waste Burned for Energy Recovery

SOURCE: 50 FR 49204, Nov. 29, 1985, unless otherwise noted.

TABLE 1

Unit of measure	Symbol[1]	Density
Pounds	P	
Short tons (2000 lbs)	T	
Gallons (U.S.)	G	P/G
Cubic yards	Y	T/Y
Kilograms	K	
Tonnes (1000 kg)	M	
Liters	L	K/L
Cubic meters	C	M/C

[1] Single digit symbols are used here for data processing purposes.

(3) The method(s) (by handling code(s) as specified in Table 2) and date(s) of treatment, storage, or disposal.

TABLE 2—HANDLING CODES FOR TREATMENT, STORAGE, AND DISPOSAL METHODS

Enter the handling code(s) listed below that most closely represents the technique(s) used at the facility to treat, store, or dispose of each quantity of hazardous waste received.

1. Storage

S01 Container (barrel, drum, etc.)
S02 Tank
S03 Waste pile
S04 Surface impoundment
S05 Other (specify)

2. Treatment

(a) Thermal Treatment

T06 Liquid injection incinerator
T07 Rotary kiln incinerator
T08 Fluidized bed incinerator
T09 Multiple hearth incinerator
T10 Infrared furnace incinerator
T11 Molten salt destructor
T12 Pyrolysis
T13 Wet air oxidation
T14 Calcination
T15 Microwave discharge
T16 Cement kiln
T17 Lime kiln
T18 Other (specify)

(b) Chemical Treatment

T19 Absorption mound
T20 Absorption field
T21 Chemical fixation
T22 Chemical oxidation
T23 Chemical precipitation
T24 Chemical reduction
T25 Chlorination
T26 Chlorinolysis
T27 Cyanide destruction
T28 Degradation
T29 Detoxification
T30 Ion exchange
T31 Neutralization
T32 Ozonation
T33 Photolysis
T34 Other (specify)

(c) Physical Treatment:

(1) Separation of components

T35 Centrifugation
T36 Clarification
T37 Coagulation
T38 Decanting
T39 Encapsulation
T40 Filtration
T41 Flocculation
T42 Flotation
T43 Foaming
T44 Sedimentation
T45 Thickening
T46 Ultrafiltration
T47 Other (specify)

(2) Removal of Specific Components

T48 Absorption-molecular sieve
T49 Activated carbon
T50 Blending
T51 Catalysis
T52 Crystallization
T53 Dialysis
T54 Distillation
T55 Electrodialysis
T56 Electrolysis
T57 Evaporation
T58 High gradient magnetic separation
T59 Leaching
T60 Liquid ion exchange
T61 Liquid-liquid extraction
T62 Reverse osmosis
T63 Solvent recovery
T64 Stripping
T65 Sand filter
T66 Other (specify)

(d) Biological Treatment

T67 Activated sludge
T68 Aerobic lagoon
T69 Aerobic tank
T70 Anaerobic lagoon
T71 Composting
T72 Septic tank
T73 Spray irrigation
T74 Thickening filter
T75 Tricking filter
T76 Waste stabilization pond
T77 Other (specify)
T78-79 [Reserved]

3. Disposal

D80 Underground injection
D81 Landfill
D82 Land treatment
D83 Ocean disposal
D84 Surface impoundment (to be closed as a landfill)
D85 Other (specify)

APPENDIX II—[RESERVED]

APPENDIX III—EPA INTERIM PRIMARY DRINKING WATER STANDARDS

Parameter	Maximum level (mg/l)
Arsenic	0.05
Barium	1.0
Cadmium	0.01
Chromium	0.05
Fluoride	1.4-2.4
Lead	0.05
Mercury	0.002
Nitrate (as N)	10
Selenium	0.01
Silver	0.05
Endrin	0.0002
Lindane	0.004
Methoxychlor	0.1
Toxaphene	0.005
2,4-D	0.1
2,4,5-TP Silver	0.01
Radium	5 pCi/1
Gross Alpha	15 pCi/1
Gross Beta	4 millirem/yr
Turbidity	1/TU
Coliform Bacteria	1/100 ml

[*Comment:* Turbidity is applicable only to surface water supplies.]

APPENDIX IV—TESTS FOR SIGNIFICANCE

As required in § 265.93(b) the owner or operator must use the Student's t-test to determine statistically significant changes in the concentration or value of an indicator parameter in periodic ground-water samples when compared to the initial background concentration or value of that indicator parameter. The comparison must consider individually each of the wells in the monitoring system. For three of the indicator parameters (specific conductance, total organic carbon, and total organic halogen) a single-tailed Student's t-test must be used to test at the 0.01 level of significance for significant increases over background. The difference test for pH must be a two-tailed Student's t-test at the overall 0.01 level of significance.

The student's t-test involves calculation of the value of a t-statistic for each comparison of the mean (average) concentration or value (based on a minimum of four replicate measurements) of an indicator parameter with its initial background concentration or value. The calculated value of the t-statistic must then be compared to the value of the t-statistic found in a table for t-test of significance at the specified level of significance. A calculated value of t which exceeds the value of t found in the table indicates a statistically significant change in the concentration or value of the indicator parameter.

Formulae for calculation of the t-statistic and tables for t-test of significance can be found in most introductory statistics texts.

APPENDIX V—EXAMPLES OF POTENTIALLY INCOMPATIBLE WASTE

Many hazardous wastes, when mixed with other waste or materials at a hazardous waste facility, can produce effects which are harmful to human health and the environment, such as (1) heat or pressure, (2) fire or explosion, (3) violent reaction, (4) toxic dusts, mists, fumes, or gases, or (5) flammable fumes or gases.

Below are examples of potentially incompatible wastes, waste components, and materials, along with the harmful consequences which result from mixing materials in one group with materials in another group. The list is intended as a guide to owners or operators of treatment, storage, and disposal facilities, and to enforcement and permit granting officials, to indicate the need for special precautions when managing these potentially incompatible waste materials or components.

This list is not intended to be exhaustive. An owner or operator must, as the regulations require, adequately analyze his wastes so that he can avoid creating uncontrolled substances or reactions of the type listed below, whether they are listed below or not.

It is possible for potentially incompatible wastes to be mixed in a way that precludes a reaction (e.g., adding acid to water rather than water to acid) or that neutralizes them (e.g., a strong acid mixed with a strong base), or that controls substances produced (e.g., by generating flammable gases in a closed tank equipped so that ignition cannot occur, and burning the gases in an incinerator).

In the lists below, the mixing of a Group A material with a Group B material may have the potential consequence as noted.

Group 1-A	Group 1-B
Acetylene sludge	Acid sludge
Alkaline caustic liquids	Acid and water
Alkaline cleaner	Battery acid
Alkaline corrosive liquids	Chemical cleaners
Alkaline corrosive battery fluid	Electrolyte, acid
Caustic wastewater	Etching acid liquid or solvent
Lime sludge and other corrosive alkalies	
Lime wastewater	Pickling liquor and other corrosive acids
Lime and water	Spent acid
Spent caustic	Spent mixed acid

by OMB under control number 2050-0028. The storage requirements contained in paragraph (c) of this section were approved by OMB under control number 2050-0009. The certification requirements contained in paragraph (d) of this section were approved by OMB under control number 2050-0047. The recordkeeping requirements contained in paragraph (e) of this section were approved by OMB under control number 2050-0047.)

[50 FR 49204, Nov. 29, 1985, as amended at 52 FR 11821, Apr. 13, 1987]

Subpart E—Used Oil Burned for Energy Recovery

SOURCE: 50 FR 49205, Nov. 29, 1985, unless otherwise noted.

§ 266.40 Applicability.

(a) The regulations of this subpart apply to used oil that is burned for energy recovery in any boiler or industrial furnace that is not regulated under Subpart O of Part 264 or 265 of this chapter, except as provided by paragraphs (c) and (e) of this section. Such used oil is termed "used oil fuel". Used oil fuel includes any fuel produced from used oil by processing, blending, or other treatment.

(b) "Used oil" means any oil that has been refined from crude oil, used, and, as a result of such use, is contaminated by physical or chemical impurities.

(c) Except as provided by paragraph (d) of this section, used oil that is mixed with hazardous waste and burned for energy recovery is subject to regulation as hazardous waste fuel under Subpart D of Part 266. Used oil containing more than 1000 ppm of total halogens is presumed to be a hazardous waste because it has been mixed with halogenated hazardous waste listed in Subpart D of Part 261 of this chapter. Persons may rebut this presumption by demonstrating that the used oil does not contain hazardous waste (for example, by showing that the used oil does not contain significant concentrations of halogenated hazardous constituents listed in Appendix VIII of Part 261 of this chapter).

(d) Used oil burned for energy recovery is subject to regulation under this subpart rather than as hazardous waste fuel under Subpart D of this part if it is a hazardous waste solely because it:

(1) Exhibits a characteristic of hazardous waste identified in Subpart C of Part 261 of this chapter, provided that it is not mixed with a hazardous waste; or

(2) Contains hazardous waste generated only by a person subject to the special requirements for small quantity generators under § 261.5 of this chapter.

(e) Except as provided by paragraph (c) of this section, used oil burned for energy recovery, and any fuel produced from used oil by processing, blending, or other treatment, is subject to regulation under this subpart unless it is shown not to exceed any of the allowable levels of the constituents and properties in the specification shown in the following table. Used oil fuel that meets the specification is subject only to the analysis and recordkeeping requirements under § 266.43(b) (1) and (6). Used oil fuel that exceeds any specification level is termed "off-specification used oil fuel".

USED OIL EXCEEDING ANY SPECIFICATION LEVEL IS SUBJECT TO THIS SUBPART WHEN BURNED FOR ENERGY RECOVERY [a]

Constituent/property	Allowable level
Arsenic	5 ppm maximum.
Cadmium	2 ppm maximum.
Chromium	10 ppm maximum.
Lead	100 ppm maximum.
Flash Point	100 °F minimum.
Total Halogens	4,000 ppm maximum.[b]

[a] The specification does not apply to used oil fuel mixed with a hazardous waste other than small quantity generator hazardous waste.

[b] Used oil containing more than 1,000 ppm total halogens is presumed to be a hazardous waste under the rebuttable presumption provided under § 266.40(c). Such used oil is subject to Subpart D of this part rather than this subpart when burned for energy recovery unless the presumption of mixing can be successfully rebutted.

§ 266.41 Prohibitions.

(a) A person may market off-specification used oil for energy recovery only:

(1) To burners or other marketers who have notified EPA of their used oil management activities stating the location and general description of such activities, and who have an EPA identification number; and

(2) To burners who burn the used oil in an industrial furnace or boiler identified in paragraph (b) of this section.

(b) Off-specification used oil may be burned for energy recovery in only the following devices:

(1) Industrial furnaces identified in § 260.10 of this chapter; or

(2) Boilers, as defined in § 260.10 of this chapter, that are identified as follows:

(i) Industrial boilers located on the site of a facility engaged in a manufacturing process where substances are transformed into new products, including the component parts of products, by mechanical or chemical processes;

(ii) Utility boilers used to produce electric power, steam, or heated or cooled air or other gases or fluids for sale; or

(iii) Used oil-fired space heaters provided that:

(A) The heater burns only used oil that the owner or operator generates or used oil received from do-it-yourself oil changers who generate used oil as household waste;

(B) The heater is designed to have a maximum capacity of not more than 0.5 million Btu per hour; and

(C) The combustion gases from the heater are vented to the ambient air.

§ 266.42 Standards applicable to generators of used oil burned for energy recovery.

(a) Except as provided in paragraphs (b) and (c) of this section, generators of used oil are not subject to this subpart.

(b) Generators who market used oil directly to a burner are subject to § 266.43.

(c) Generators who burn used oil are subject to § 266.44.

§ 266.43 Standards applicable to marketers of used oil burned for energy recovery.

(a) Persons who market used oil fuel are termed "marketers". Except as provided below, marketers include generators who market used oil fuel directly to a burner, persons who receive used oil from generators and produce, process, or blend used oil fuel from these used oils (including persons sending blended or processed used oil to brokers or other intermediaries), and persons who distribute but do not process or blend used oil fuel. The following persons are not marketers subject to this subpart:

(1) Used oil generators, and collectors who transport used oil received only from generators, unless the generator or collector markets the used oil directly to a person who burns it for energy recovery. However, persons who burn some used oil fuel for purposes of processing or other treatment to produce used oil fuel for marketing are considered to be burning incidentally to processing. Thus, generators and collectors who market to such incidental burners are not marketers subject to this subpart;

(2) Persons who market only used oil fuel that meets the specification under § 266.40(e) and who are not the first person to claim the oil meets the specification (i.e., marketers who do not receive used oil from generators or initial transporters and marketers who neither receive nor market off-specification used oil fuel).

(b) Marketers are subject to the following requirements:

(1) *Analysis of used oil fuel.* Used oil fuel is subject to regulation under this subpart unless the marketer obtains analyses or other information documenting that the used oil fuel meets the specification provided under § 266.40(e).

(2) *Prohibitions.* The prohibitions under § 266.41(a);

(3) *Notification.* Notification to EPA stating the location and general description of used oil management activities. Even if a marketer has previously notified EPA of his hazardous waste management activities under section 3010 of RCRA and obtained a U.S. EPA Identification Number, he must renotify to identify his used oil management activities.

(4) *Invoice system.* When a marketer initiates a shipment of off-specification used oil, he must prepare and send the receiving facility an invoice containing the following information:

(i) An invoice number;

20 142 O - 88 — 23

§ 266.30 Applicability.

(a) The regulations of this subpart apply to hazardous wastes that are burned for energy recovery in any boiler or industrial furnace that is not regulated under Subpart O of Part 264 or 265 of this chapter, except as provided by paragraph (b) of this section. Such hazardous wastes burned for energy recovery are termed "hazardous waste fuel". Fuel produced from hazardous waste by processing, blending, or other treatment is also hazardous waste fuel. (These regulations do not apply, however, to gas recovered from hazardous waste management activities when such gas is burned for energy recovery.)

(b) The following hazardous wastes are not subject to regulation under this subpart:

(1) Used oil burned for energy recovery that is also a hazardous waste solely because it exhibits a characteristic of hazardous waste identified in Subpart C of Part 261 of this chapter. Such used oil is subject to regulation under Subpart E of Part 266 rather than this subpart; and

(2) Hazardous wastes that are exempt from regulation under §§ 261.4 and 261.6(a)(3)(v) through (ix) of this chapter, and hazardous wastes that are subject to the special requirements for small quantity generators under § 261.5 of this chapter.

§ 266.31 Prohibitions.

(a) A person may market hazardous waste fuel only:

(1) To persons who have notified EPA of their hazardous waste fuel activities and have a U.S. EPA Identification Number; and

(2) If the fuel is burned, to persons who burn the fuel in boilers or industrial furnaces identified in paragraph (b) of this section.

(b) Hazardous waste fuel may be burned for energy recovery in only the following devices;

(1) Industrial furnaces identified in § 260.10 of this chapter;

(2) Boilers, as defined in § 260.10 of this chapter, that are identified as follows:

(i) Industrial boilers located on the site of a facility engaged in a manufacturing process where substances are transformed into new products, including the component parts of products, by mechanical or chemical processes; or

(ii) Utility boilers used to produce electric power, steam, or heated or cooled air or other gases or fluids for sale.

(c) No fuel which contains any hazardous waste may be burned in any cement kiln which is located within the boundaries of any incorporated municipality with a population greater than 500,000 (based on the most recent census statistics) unless such kiln fully complies with regulations under this chapter that are applicable to incinerators.

[50 FR 49204, Nov. 29, 1985, as amended at 52 FR 11821, Apr. 13, 1987]

§ 266.32 Standards applicable to generators of hazardous waste fuel.

(a) Generators of hazardous waste that is used as a fuel or used to produce a fuel are subject to Part 262 of this chapter.

(b) Generators who market hazardous waste fuel to a burner also are subject to § 266.34.

(c) Generators who are burners also are subject to § 266.35.

§ 266.33 Standards applicable to transporters of hazardous waste fuel.

Transporters of hazardous waste fuel (and hazardous waste that is used to produce a fuel) are subject to Part 263 of this chapter.

§ 266.34 Standards applicable to marketers of hazardous waste fuel.

Persons who market hazardous waste fuel are termed "marketers", and are subject to the following requirements. Marketers include generators who market hazardous waste fuel directly to a burner, persons who receive hazardous waste from generators and produce, process, or blend hazardous waste fuel from these hazardous wastes, and persons who distribute but do not process or blend hazardous waste fuel.

(a) *Prohibitions.* The prohibitions under § 266.31(a);

(b) *Notification.* Notification of hazardous waste fuel activities. Even if a marketer has previously notified EPA of his hazardous waste management activities and obtained a U.S. EPA Identification Number, he must renotify to identify his hazardous waste fuel activities.

(c) *Storage.* The applicable provisions of § 262.34, and Subparts A through L of Part 264, Subparts A through L of Part 265, and Part 270 of this chapter;

(d) *Off-site shipment.* The standards for generators in Part 262 of this chapter when a marketer initiates a shipment of hazardous waste fuel;

(e) *Required notices.* (1) Before a marketer initiates the first shipment of hazardous waste fuel to a burner or another marketer, he must obtain a one-time written and signed notice from the burner or marketer certifying that:

(i) The burner or marketer has notified EPA and identified his waste-as-fuel activities; and

(ii) If the recipient is a burner, the burner will burn the hazardous waste fuel only in an industrial furnace or boiler identified in § 266.31(b).

(2) Before a marketer accepts the first shipment of hazardous waste fuel from another marketer, he must provide the other marketer with a one-time written and signed certification that he has notified EPA under section 3010 of RCRA and identified his hazardous waste fuel activities; and

(f) *Recordkeeping.* In addition to the applicable recordkeeping requirements of Parts 262, 264, and 265 of this chapter, a marketer must keep a copy of each certification notice he receives or sends for three years from the date he last engages in a hazardous waste fuel marketing transaction with the person who sends or receives the certification notice.

(The notification requirements contained in paragraph (b) of this section were approved by OMB under control number 2050-0028. The storage requirements contained in paragraph (c) of this section were approved by OMB under control number 2050-0009. The manifest and invoice requirements contained in paragraph (d) of this section were approved by OMB under control numbers 2050-0039 and 2050-0047, respectively. The certification requirements contained in paragraph (e) of this section were approved by OMB under control number 2050-0047. The recordkeeping requirements contained in paragraph (f) of this section were approved by OMB under control number 2050-0047.)

[50 FR 49204, Nov. 29, 1985, as amended at 52 FR 11821, Apr. 13, 1987]

§ 266.35 Standards applicable to burners of hazardous waste fuel.

Owners and operators of industrial furnaces and boilers identified in § 266.31(b) that burn hazardous waste fuel are "burners" and are subject to the following requirements:

(a) *Prohibitions.* The prohibitions under § 266.31(b);

(b) *Notification.* Notification of hazardous waste fuel activities. Even if a burner has previously notified EPA of his hazardous waste management activities and obtained a U.S. EPA Identification Number, he must renotify to identify his hazardous waste fuel activities.

(c) *Storage.* (1) For short term accumulation by generators who burn their hazardous waste fuel on site, the applicable provisions of § 262.34 of this chapter;

(2) For existing storage facilities, the applicable provisions of Subparts A through L of Part 265, and Parts 270 and 124 of this chapter; and

(3) For new storage facilities, the applicable provisions of Subparts A through L of Part 264, and Parts 270 and 124 of this chapter;

(d) *Required notices.* Before a burner accepts the first shipment of hazardous waste fuel from a marketer, he must provide the marketer a one-time written and signed notice certifying that:

(1) He has notified EPA and identified his waste-as-fuel activities; and

(2) He will burn the fuel only in a boiler or furnace identified in § 266.31(b).

(e) *Recordkeeping.* In addition to the applicable recordkeeping requirements of Parts 264 and 265 of this chapter, a burner must keep a copy of each certification notice that he sends to a marketer for three years from the date he last receives hazardous waste fuel from that marketer.

(The notification requirements contained in paragraph (b) of this section were approved

Parts 262 through 265, 270 and 124 of this chapter.

Subpart G—Spent Lead-Acid Batteries Being Reclaimed

§ 266.80 Applicability and requirements.

(a) The regulations of this subpart apply to persons who reclaim spent lead-acid batteries that are recyclable materials ("spent batteries"). Persons who generate, transport, or collect spent batteries, or who store spent batteries but do not reclaim them are not subject to regulation under Parts 262 through 266 or Part 270 or 124 of this chapter, and also are not subject to the requirements of section 3010 of RCRA.

(b) Owners or operators of facilities that store spent batteries before reclaiming them are subject to the following requirements.

(1) Notification requirements under section 3010 of RCRA;

(2) All applicable provisions in Subparts A, B (but not § 264.13 (waste analysis)), C, D, E (but not § 264.71 or § 264.72 (dealing with the use of the manifest and manifest discrepancies)), and F through L of Part 264 of this chapter;

[50 FR 666, Jan. 4, 1985, as amended at 50 FR 33543, Aug. 20, 1985]

PART 267—INTERIM STANDARDS FOR OWNERS AND OPERATORS OF NEW HAZARDOUS WASTE LAND DISPOSAL FACILITIES

Subpart A—General

Sec.
267.1 Purpose, scope and applicability.
267.2 Applicability of Part 264 standards.
267.3 Duration of Part 267 standards and their relationship to permits.
267.4 Imminent hazard action.
267.5 Additional permit procedures applicable to Part 267.
267.6 Definitions.

Subpart B—Environmental Performance Standard

267.10 Environmental performance standard.

Subpart C—Landfills

267.20 Applicability.
267.21 General design requirements.
267.22 General operating requirements.
267.23 Closure and post-closure.
267.24 Treatment of waste.
267.25 Additional requirements.

Subpart D—Surface Impoundments

267.30 Applicability.
267.31 General design requirements.
267.32 General operating requirements.
267.33 Closure and post-closure.
267.34 Treatment of waste.
267.35 Additional requirements.

Subpart E—Land Treatment

267.40 Applicability.
267.41 General design requirements.
267.42 General operating requirements.
267.43 Unsaturated zone monitoring.
267.44 Closure and post-closure.
267.45 Treatment of waste.
267.46 Additional requirements.

Subpart F—Ground-Water Monitoring

267.50 Applicability.
267.51 Ground-water monitoring system.
267.52 Ground-water monitoring procedures.
267.53 Additional requirements.

Subpart G—Underground Injection

267.60 Applicability.
267.61 General design requirements.
267.62 General operating requirements.
267.63 Closure.
267.64 Additional requirements.

AUTHORITY: Secs. 1006, 2202(a), 3004 and 3005 of the Solid Waste Disposal Act, as amended by the Resource Conservation and Recovery Act of 1976, as amended, 42 U.S.C. 6905, 6912(a), 6924 and 6925.

SOURCE: 46 FR 12429, Feb. 13, 1981, unless otherwise noted.

Subpart A—General

§ 267.1 Purpose, scope and applicability.

(a) The purpose of this part is to establish minimum national standards that define the acceptable management of hazardous waste for new land disposal facilities.

(b) The regulations in this part apply to owners and operators of new hazardous waste landfills, surface impoundments, land treatment facilities and Class I underground injection wells (as defined in § 122.32(g) of this chapter) that require individual RCRA permits under 40 CFR Part 122.

(c) The requirements of this part do not apply to:

(1) A person disposing of hazardous waste by means of ocean disposal subject to a RCRA permit by rule issued under § 122.26(a) of this chapter.

(2) A person disposing of hazardous waste by means of underground injection subject to a RCRA permit by rule under § 122.26(b) of this chapter.

(3) An owner or operator of a POTW subject to a RCRA permit by rule under § 122.26(c) of this chapter.

(4) The owner or operator of a facility permitted, licensed, or registered by a State to manage municipal or industrial solid waste, if the only hazardous waste the facility treats, stores, or disposes of is excluded from regulation under Parts 262 through 265 and Parts 122 and 124 of this chapter by § 261.5 of this chapter;

(5) The owner or operator of a facility which treats or stores hazardous waste, which treatment or storage meets the criteria in § 261.6(A) of this chapter, except to the extent that § 261.6(b) of this chapter provides otherwise;

(6) A generator accumulating waste on-site in compliance with § 262.34 of this chapter;

(7) A farmer disposing of waste pesticides from his own use in compliance with § 262.51 of this chapter;

(8) The owner or operator of a totally enclosed treatment facility, as defined in § 260.10;

(9) The owner or operator of an elementary neutralization unit or a wastewater treatment unit as defined in § 260.10 of this chapter.

(10) Persons with respect to those activities that are carried out to immediately contain or treat a spill of hazardous waste or material which, when spilled, becomes a hazardous waste.

§ 267.2 Applicability of Part 264 standards.

In addition to the standards contained in this part, owners and operators of new hazardous waste landfills, surface impoundments, land treatment facilities and underground injection wells must comply with § 264.18 and Subparts B, C, D, E, G and H of Part 264.

§ 267.3 Duration of Part 267 standards and their relationship to permits.

(a) The regulations in this subpart are applicable, and will serve as a basis for issuing permits, to owners or operators of new hazardous waste landfills, surface impoundments, land treatment facilities, or underground injection facilities until final Part 264 regulations for such facilities become effective or until February 13, 1983, whichever is earlier.

(b) Only those owners and operators of new hazardous waste landfills, surface impoundments, land treatment facilities or underground injection wells who have applied for a permit and for whom public notice of the preparation of a draft permit has been issued under § 124.10 of this chapter by the date final Part 264 regulations for these facilities become effective or [2 years after date of publication], whichever is earlier, may be issued permits under the regulations in this part.

§ 267.4 Imminent hazard action.

Notwithstanding any other provisions of these regulations, enforcement actions may be brought pursuant to section 7003 of RCRA.

§ 267.5 Additional permit procedures applicable to Part 267.

(a) The procedures for issuance, modification, revocation and reissuance, and termination of permits under this part are set forth in Part 124 of this chapter. In addition, the following procedures apply to permits under Part 267:

(1) Any facility for which a draft permit is prepared pursuant to this Part is a major hazardous waste management facility. A fact sheet shall be prepared for each such facility in accordance with § 124.8. Instead of the "brief summary of the basis for the draft permit conditions" required by § 124.8(b)(4), the fact sheet shall include a detailed discussion of basis for the draft permit conditions. This shall include a demonstration that relevant

(ii) His own EPA identification number and the EPA identification number of the receiving facility;

(iii) The names and addresses of the shipping and receiving facilities;

(iv) The quantity of off-specification used oil to be delivered;

(v) The date(s) of shipment or delivery; and

(vi) The following statement: "This used oil is subject to EPA regulation under 40 CFR Part 266";

NOTE: Used oil that meets the definition of combustible liquid (flash point below 200 °F but at or greater than 100 °F) or flammable liquid (flash point below 100 °F) is subject to Department of Transportation Hazardous Materials Regulations at 49 CFR Parts 100 through 177.

(5) *Required notices.* (i) Before a marketer initiates the first shipment of off-specification used oil to a burner or other marketer, he must obtain a one-time written and signed notice from the burner or marketer certifying that:

(A) The burner or marketer has notified EPA stating the location and general description of his used oil management activities; and

(B) If the recipient is a burner, the burner will burn the off-specification used oil only in an industrial furnace or boiler identified in § 266.41(b); and

(ii) Before a marketer accepts the first shipment of off-specification used oil from another marketer subject to the requirements of this section, he must provide the marketer with a one-time written and signed notice certifying that he has notified EPA of his used oil management activities; and

(6) *Recordkeeping*—(i) *Used oil fuel that meets the specification.* A marketer who first claims under paragraph (b)(1) of this section that used oil fuel meets the specification must keep copies of analysis (or other information used to make the determination) of used oil for three years. Such marketers must also record in an operating log and keep for three years the following information on each shipment of used oil fuel that meets the specification. Such used oil fuel is not subject to further regulation, unless it is subsequently mixed with hazardous waste or unless it is mixed with used oil so that it no longer meets the specification.

(A) The name and address of the facility receiving the shipment;

(B) The quantity of used oil fuel delivered;

(C) The date of shipment or delivery; and

(D) A cross-reference to the record of used oil analysis (or other information used to make the determination that the oil meets the specification) required under paragraph (b)(6)(i) of this section.

(ii) *Off-specification used oil fuel.* A marketer who receives or initiates an invoice under the requirements of this section must keep a copy of each invoice for three years from the date the invoice is received or prepared. In addition, a marketer must keep a copy of each certification notice that he receives or sends for three years from the date he last engages in an off-specification used oil fuel marketing transaction with the person who sends or receives the certification notice.

(The analysis requirements contained in paragraph (b)(1) of this section were approved by OMB under control number 2050-0047. The notification requirements contained in paragraph (b)(3) of this section were approved by OMB under control number 2050-0028. The invoice requirements contained in paragraph (b)(4) of this section were approved by OMB under control number 2050-0047. The certification requirements contained in paragraph (b)(5) of this section were approved by OMB under control number 2050-0047. The recordkeeping requirements contained in paragraph (b)(6) of this section were approved by OMB under control number 2050-0047.)

[50 FR 49205, Nov. 29, 1985, as amended at 52 FR 11822, Apr. 13, 1987]

§ 266.44 Standards applicable to burners of used oil burned for energy recovery.

Owners and operators of facilities that burn used oil fuel are "burners" and are subject to the following requirements:

(a) *Prohibition.* The prohibition under § 266.41(b);

(b) *Notification.* Burners of off-specification used oil fuel, and burners of used oil fuel who are the first to claim that the oil meets the specification provided under § 266.40(e), except burners who burn specification oil that they generate, must notify EPA stating the location and general description of used oil management activities. Burners of used oil fuel that meets the specification who receive such oil from a marketer that previously notified EPA are not required to notify. Owners and operators of used oil-fired space heaters that burn used oil fuel under the provisions of § 266.41(b)(2) are exempt from this notification requirement. Even if a burner has previously notified EPA of his hazardous waste management activities under section 3010 of RCRA and obtained an identification number, he must renotify to identify his used oil management activities.

(c) *Required notices.* Before a burner accepts the first shipment of off-specification used oil fuel from a marketer, he must provide the marketer a one-time written and signed notice certifying that:

(1) He has notified EPA stating the location and general description of his used oil management activities; and

(2) He will burn the used oil only in an industrial furnace or boiler identified in § 266.41(b); and

(d) *Used oil fuel analysis.* (1) Used oil fuel burned by the generator is subject to regulation under this subpart unless the burner obtains analysis (or other information) documenting that the used oil meets the specification provided under § 266.40(e).

(2) Burners who treat off-specification used oil fuel by processing, blending, or other treatment to meet the specification provided under § 266.40(e) must obtain analyses (or other information) documenting that the used oil meets the specification.

(e) *Recordkeeping.* A burner who receives an invoice under the requirements of this section must keep a copy of each invoice for three years from the date the invoice is received. Burners must also keep for three years copies of analyses of used oil fuel as may be required by paragraph (d) of this section. In addition, he must keep a copy of each certification notice that he sends to a marketer for three years from the date he last receives off-specification used oil from that marketer.

(The notification requirements contained in paragraph (b) of this section were approved by OMB under control number 2050-0028. The certification requirements contained in paragraph (c) of this section were approved by OMB under control number 2050-0047. The analysis requirements contained in paragraph (d) of this section were approved by OMB under control number 2050-0047. The recordkeeping requirements contained in paragraph (e) of this section were approved by OMB under control number 2050-0047.)

[50 FR 49205, Nov. 29, 1985, as amended at 52 FR 11822, Apr. 13, 1987]

Subpart F—Recyclable Materials Utilized for Precious Metal Recovery

§ 266.70 Applicability and requirements.

(a) The regulations of this subpart apply to recyclable materials that are reclaimed to recover economically significant amounts of gold, silver, platinum, paladium, irridium, osmium, rhodium, ruthenium, or any combination of these.

(b) Persons who generate, transport, or store recyclable materials that are regulated under this subpart are subject to the following requirements:

(1) Notification requirements under section 3010 of RCRA;

(2) Subpart B of Part 262 (for generators), §§ 263.20 and 263.21 (for transporters), and §§ 265.71 and 265.72 (for persons who store) of this chapter;

(c) Persons who store recycled materials that are regulated under this subpart must keep the following records to document that they are not accumulating these materials speculatively (as defined in § 261.1(c) of this chapter);

(1) Records showing the volume of these materials stored at the beginning of the calendar year;

(2) The amount of these materials generated or received during the calendar year; and

(3) The amount of materials remaining at the end of the calendar year.

(d) Recyclable materials that are regulated under this subpart that are accumulated speculatively (as defined in § 261.1(c) of this chapter) are subject to all applicable provisions of

ternatives for managing any leachate or contaminated runoff produced at the facility.

(d) The landfill must be inspected at a sufficient frequency to assure compliance with § 267.10 of this part.

§ 267.23 Closure and post-closure.

(a) A landfill must be closed in a manner that will comply with § 267.10 of this part. Closure must include placement of a final cover over the landfill, and the closure plan under § 264.112 of this chapter must specify the function and design of the cover. Proper closure of a landfill must reflect a consideration of:

(1) The type and amount of waste in the facility;

(2) The mobility and expected rate of migration of waste;

(3) Site location, topography and surrounding land use;

(4) Climatic conditions in the area;

(5) Characteristics of the cover including material, final surface contours, thickness, porosity and permeability, slope, length of run of slope, and type of vegetation on the cover; and

(6) Geological and soil profiles and surface and subsurface hydrology of the site.

(b) A landfill must be maintained in a manner that complies with § 267.10 of this part during the post-closure period. The post-closure plan under § 264.118 of this chapter must specify the procedures that will be used to satisfy this paragraph. Proper maintenance of a landfill during the post-closure period must reflect a consideration of:

(1) The type and amount of waste in the facility;

(2) The mobility and expected rate of migration of the waste;

(3) Site location, topography and surrounding land use;

(4) Climatic conditions in the area;

(5) Characteristics of the cover including material, final surface contours, thickness, porosity and permeability, slope, length of run of slope, and type of vegetation on the cover;

(6) Geological and soil profiles and surface and subsurface hydrology of the site; and

(7) The maintenance of any groundwater monitoring system or leachate and runoff control system at the facility.

§ 267.24 Treatment of waste.

The Regional Administrator may waive any of the requirements in §§ 267.21, 267.22 or 267.23 of this subpart where necessary to achieve treatment of hazardous waste in a landfill, provided that the waiver does not result in noncompliance with § 267.10.

§ 267.25 Additional requirements.

The Regional Administrator may place additional requirements on owners and operators of new landfills, besides those otherwise required by this subpart, where necessary to comply with § 267.10 of this part.

Subpart D—Surface Impoundments

§ 267.30 Applicability.

The regulations in this subpart apply to owners and operators of new facilities that dispose of hazardous waste in surface impoundments.

§ 267.31 General design requirements.

(a) Each surface impoundment must include a liner designed to comply with § 267.10 of this part. The design of the facility liner must reflect a consideration of:

(1) The physical and chemical characteristics of the waste in the facility;

(2) The pressure head on the liner;

(3) Climatic conditions in the area;

(4) The permeability of the liner material, including compaction density and moisture content where earthen materials are present;

(5) The physical and chemical properties of the soil underlying the facility that supports any emplaced liner; and

(6) The potential for damage to the liner system that could occur during installation of any emplaced liner.

(b) Each surface impoundment must be designed so as to prevent overtopping due to wind and wave action, overfilling, precipitation or any combination thereof.

(c) Where dikes are part of the surface impoundment, the dikes must be designed to comply with § 267.10 of this part. The design of any facility dikes must reflect a consideration of:

(1) The structural integrity of the dike, including the effects of plants and burrowing animals on earthern dikes;

(2) The potential for water erosion of the dike; and

(3) The potential for wind erosion of the dike.

§ 267.32 General operating requirements.

(a) Incompatible wastes, or incompatible wastes and materials, must not be placed in the same surface impoundment, unless § 264.17(b) is complied with. The waste analysis plan required by § 264.13 must include the analyses needed to comply with this paragraph.

(b) Any emplaced liner material must ber installed in a manner that will protect the function and physical integrity of the liner.

(c) The surface impoundment must be operated so as to prevent overtopping due to wind and wave action, overfilling, precipitation or any combination thereof.

(d) The surface impoundment must be inspected at a sufficient frequency to assure compliance with § 267.10 of this part.

§ 267.33 Closure and post-closure.

(a) A surface impoundment must be closed in a manner that will comply with § 267.10 of this part. Closure must include placement of a final cover over the surface impoundment, and the closure plan under § 264.112 of this chapter must specify the function and design of the cover. Proper closure of a surface impoundment must reflect a consideration of:

(1) The type and amount of waste in the facility, including the amount of free liquids;

(2) The mobility and expected rate of migration of the waste;

(3) Site location, topography and surrounding land use;

(4) Climatic conditions in the area;

(5) Characteristics of the cover including material, final surface contours, thickness, porosity and permeability, slope, length of run of slope and type of vegetation on the cover;

(6) Geological and soil profiles and surface and subsurface hydrology of the site; and

(7) The potential for eliminating free liquids from the facility.

(b) A surface impoundment must be maintained in a manner that complies with § 267.10 of this part during the post-closure period. The post-closure plan under § 264.118 of this chapter must specify the procedures that will be used to satisfy this paragraph. Proper maintenance of a surface impoundment during the post-closure period must reflect a consideration of:

(1) The type and amount of waste in the facility;

(2) The mobility and expected rate of migration of the waste;

(3) Site location, topography and surrounding land use;

(4) Climatic conditions in the area;

(5) Characteristics of the cover including material, final surface contours, thickness, porosity and permeability, slope, length of run of slope, and type of vegetation on the cover;

(6) Geological and soil profiles and surface and subsurface hydrology of the site; and

(7) The maintenance of any groundwater monitoring system at the facility.

§ 267.34 Treatment of waste.

The Regional Administrator may waive any of the requirements in §§ 267.31, 267.32 or 267.33 of this subpart where necessary to achieve treatment of hazardous waste in a surface impoundment, provided that the waiver does not result in noncompliance.

§ 267.35 Additional requirements.

The Regional Administrator may place additional requirements on owners and operators of new surface impoundments, besides those otherwise required by this subpart, where necessary to comply with § 267.10 of this part.

Subpart E—Land Treatment

§ 267.40 Applicability.

The regulations in this subpart apply to owners and operators of new

factors listed in Subparts C through G of this part were considered and a showing of how the draft permit reflects these considerations.

(2) The Administrator shall accept any petition under § 124.19 of this chapter and any appeal under § 124.125 of this chapter to review a permit issued under this part.

(b) The provisions of Subparts A and B in Part 122 of this chapter apply to permits under Part 267. In addition to the information required by § 122.4 and § 122.25 of this chapter, the applications for permits under this part must include the following information:

(1) For a landfill, sufficient information to demonstrate compliance with Subparts C and F of this part.

(2) For a surface impoundment, sufficient information to demonstrate compliance with Subparts D and F of this part.

(3) For a land treatment facility, sufficient information to demonstrate compliance with Subparts E and F of this part.

(4) For an underground injection well, sufficient information to demonstrate compliance with Subpart G of this part.

§ 267.6 Definitions.

Unless otherwise specified in this part, terms used in this regulation are defined in §§ 260.10 and 122.3 of this chapter.

Subpart B—Environmental Performance Standard

§ 267.10 Environmental performance standard.

All new landfills, surface impoundments, land treatment facilities and underground injection wells shall be located, designed, constructed, operated, maintained and closed in a manner that will assure protection of human health and the environment. Protection of human health and the environment shall include, but not be limited to:

(a) Prevention of adverse effects on ground-water quality considering:

(1) The volume and physical and chemical characteristics of the waste in the facility, including its potential for migration through soil or through synthetic liner materials;

(2) The hydrogeological characteristics of the facility and surrounding land;

(3) The quantity, quality and directions of ground-water flow;

(4) The proximity and withdrawal rates of ground-water users;

(5) The existing quality of groundwater, including other sources of contamination and their cumulative impact on the ground-water;

(6) The potential for health risks caused by human exposure to waste constituents;

(7) The potential damage to wildlife, crops, vegetation and physical structures caused by exposure to waste constituents;

(8) The persistence and permanence of the potential adverse effects; and

(b) Prevention of adverse effects on surface water quality considering:

(1) The volume and physical and chemical characteristics of the waste in the facility;

(2) The hydrogeological characteristics of the facility and surrounding land, including the topography of the area around the facility;

(3) The quantity, quality and directions of groundwater flow;

(4) The patterns of rainfall in the region;

(5) The proximity of the facility to surface waters;

(6) The uses of nearby surface waters and any water quality standards established for those surface waters;

(7) The existing quality of surface water, including other sources of contamination and their cumulative impact on surface water;

(8) The potential for health risks caused by human exposure to waste constituents;

(9) The potential damage to wildlife, crops, vegetation and physical structures caused by exposure to waste constitutents;

(10) The persistence and permanence of the potential adverse effects; and

(c) Prevention of adverse effects on air quality, considering:

(1) The volume and physical and chemical characteristics of the waste in the facility, including its potential for volatilization and wind dispersal;

(2) The existing quality of the air, including other sources of contamination and their cumulative impact on the air;

(3) The potential for health risks caused by human exposure to waste constitutents;

(4) The potential damage to wildlife, crops, vegetation and physical structures caused by exposure to waste constituents;

(5) The persistence and permanence of the potential adverse effects; and

(d) Prevention of adverse effects due to migration of waste constituents in the subsurface environment, considering:

(1) The volume and physical and chemical characteristics of the waste in the facility, including its potential for migration through soil;

(2) The geologic characteristics of the facility and surrounding land;

(3) The patterns of land use in the region;

(4) The potential for migration of waste constituents into sub-surface physical structures;

(5) The potential for migration of waste constituents into the root zone of food-chain crops and other vegetation;

(6) The potential for health risks caused by human exposure to waste constituents;

(7) The potential damage to wildlife, crops, vegetation and physical structures caused by exposure to waste constituents; and

(8) The persistence and permanence of the potential adverse effects.

Subpart C—Landfills

§ 267.20 Applicability.

The regulations in this subpart apply to owners and operators of new facilities that dispose of hazardous waste in landfills.

§ 267.21 General design requirements.

(a) Each landfill must include a liner designed to comply with § 267.10 of this part. The design of the facility liner must reflect a consideration of:

(1) The physical and chemical characteristics of the waste in the facility;

(2) The pressure head of leachate on the liner;

(3) Climatic conditions in the area;

(4) The permeability of the liner material, including compaction density and moisture content where earthen materials are present;

(5) The physical and chemical properties of the soil underlying the facility that supports any emplaced liner; and

(6) The potential for damage to the liner system that could occur during installation of any emplaced liner.

(b) Each landfill must include a leachate and runoff control system designed to comply with § 267.10 of this part. The design of the facility leachate and runoff control system must reflect a consideration of:

(1) The physical and chemical characteristics of the waste in the facility;

(2) Climatic conditions in the area;

(3) The volume of leachate or contaminated runoff that could be produced at the facility; and

(4) The available options for managing any leachate or contaminated runoff that is collected at the facility.

§ 267.22 General operating requirements.

(a) Incompatible wastes, or incompatible waste and materials, must not be placed in the same landfill, unless § 264.17(b) is complied with. The waste analysis plan required by § 264.13 must include the analysis needed to comply with this paragraph.

(b) Any emplaced liner material must be installed in a manner that will protect the function and physical integrity of the liner.

(c) The leachate and runoff control system must be operated and maintained in a manner that will comply with § 267.10 of this part. The procedures for operating the leachate and runoff control system must reflect a consideration of:

(1) The volume of leachate or contaminated runoff produced at the facility;

(2) The capacity of any leachate or runoff collection device at the facility;

(3) Climatic conditions in the area; and

(4) The quality of the leachate or runoff produced and the available al-

and rate of migration of waste constituents.

(b) The ground-water monitoring procedures required by this subpart must include appropriate procedures for when the ground-water monitoring program indicates that the facility is not in compliance with § 267.10 of this part. Such response procedures must be contained in the contingency plan required by Subpart D of Part 264.

§ 267.53 Additional requirements.

The Regional Administrator may place additional ground-water monitoring requirements on owners or operators of facilities subject to this part, besides those otherwise required by this subpart, where necessary to comply with § 267.10 of this part.

Subpart G—Underground Injection

§ 267.60 Applicability.

The regulations in this subpart apply to owners and operators of new facilities that dispose of hazard waste in underground injection wells which are classified as Class I under § 122.32(a) of this chapter.

§ 267.61 General design requirements.

An injection well must be designed to comply with § 267.10 of this part. The facility design must include measures (*e.g.* casing, tubing and packer set) to prevent the escape of injected fluids to the area above the zone of injection.

§ 267.62 General operating requirements.

An injection well must be operated in a manner that will comply with § 267.10 of this part. The methods for operating the injection well must reflect a consideration of:

(a) The volume and physical and chemical characteristics of the waste injected in the well;

(b) The injection pressure; and

(c) Monitoring measures to assure that the mechanical integrity of the well is maintained.

§ 267.63 Closure.

An injection well must be plugged and sealed at closure to prevent the escape of injected fluids to the area above the zone of injection.

§ 267.64 Additional requirements.

The Regional Administrator may place additional requirements on owners and operators of new injection wells, besides those otherwise required by this subpart, where necessary to comply with § 267.10 of this part.

PART 268—LAND DISPOSAL RESTRICTIONS

Subpart A—General

Sec.
268.1 Purpose, scope, and applicability.
268.2 Definitions applicable to this part.
268.3 Dilution prohibited as a substitute for treatment.
268.4 Treatment surface impoundment exemption.
268.5 Procedures for case-by-case extensions to an effective date.
268.6 Petitions to allow land disposal of a waste prohibited under Subpart C of Part 268.
268.7 Waste analysis.

Subpart B—Schedule for Land Disposal Prohibition and Establishment of Treatment Standards

268.10 Identification of wastes to be evaluated by August 8, 1988.
268.11 Identification of wastes to be evaluated by June 8, 1989.
268.12 Identification of wastes to be evaluated by May 8, 1990.
268.13 Schedule for wastes identified or listed after November 8, 1984.

Subpart C—Prohibitions on Land Disposal

268.30 Waste specific prohibitions—Solvent wastes.
268.31 Waste specific prohibitions—Dioxin-containing wastes.
268.32 Waste specific prohibitions—California list wastes.

Subpart D—Treatment Standards

268.40 Applicability of treatment standards.
268.41 Treatment standards expressed as concentrations in waste extract.
268.42 Treatment standards expressed as specified technologies.
268.43 Treatment standards expressed as waste concentrations [Reserved]
268.44 Variance from a treatment standard

Subpart E—Prohibitions on Storage

268.50 Prohibitions on storage of restricted wastes.

APPENDIX I—TOXICITY CHARACTERISTIC LEACHING PROCEDURE (TCLP)
APPENDIX II—TREATMENT STANDARDS (AS CONCENTRATIONS IN THE TREATMENT RESIDUAL EXTRACT)
APPENDIX III—LIST OF HALOGENATED ORGANIC COMPOUNDS REGULATED UNDER § 268.32

AUTHORITY: 42 U.S.C. 6905, 6912(a), 6921, and 6924.

Subpart A—General

SOURCE: 51 FR 40638, Nov. 7, 1986, unless otherwise noted.

§ 268.1 Purpose, scope and applicability.

(a) This part identifies hazardous wastes that are restricted from land disposal and defines those limited circumstances under which an otherwise prohibited waste may continue to be land disposed.

(b) Except as specifically provided otherwise in this part or Part 261 of this chapter, the requirements of this part apply to persons who generate or transport hazardous waste and owners and operators of hazardous waste treatment, storage, and disposal facilities.

(c) Prohibited wastes may continue to be land disposed as follows:

(1) Where persons have been granted an extension to the effective date of a prohibition under Subpart C of this part or pursuant to § 268.5, with respect to those wastes covered by the extension;

(2) Where persons have been granted an exemption from a prohibition pursuant to a petition under § 268.6, with respect to those wastes and units covered by the petition;

(3) Until November 8, 1988, where the wastes are contaminated soil or debris resulting from a response action taken under section 104 or 106 of the Comprehensive Environmental Response, Compensation, and Liability Act of 1980 or a corrective action required under the Resource Conservation and Recovery Act;

(4) Where the waste is generated by small quantity generators of less than 100 kilograms of non-acute hazardous wastes per month or less than 1 kilogram acute hazardous waste per month, as defined in § 261.5 of this chapter; or

(5) Where a farmer is disposing of waste pesticides in accordance with § 262.51.

[51 FR 40638, Nov. 7, 1986; 52 FR 21016, June 4, 1987, as amended at 52 FR 25788, July 8, 1987]

§ 268.2 Definitions applicable to this part.

(a) When used in this part the following terms have the meanings given below:

"*Halogenated organic compounds*" or "*HOCs*" means those compounds having a carbon-halogen bond which are listed under Appendix III to this part.

"*Hazardous constituent or constituents*" means those constituents listed in Appendix VIII to Part 261 of this chapter.

"*Land disposal*" means placement in or on the land and includes, but is not limited to, placement in a landfill, surface impoundment, waste pile, injection well, land treatment facility, salt dome formation, salt bed formation, underground mine or cave, or placement in a concrete vault or bunker intended for disposal purposes.

"*Polychlorinated biphenyls*" or "*PCBs*" are halogenated organic compounds defined in accordance with 40 CFR 761.3.

(b) All other terms have the meanings given under §§ 260.10, 261.2, 261.3, or 270.2 of this chapter.

[51 FR 40638, Nov. 7, 1986; 52 FR 21016, June 4, 1987, as amended at 52 FR 25788, July 8, 1987]

§ 268.3 Dilution prohibited as a substitute for treatment.

No generator, transporter, handler, or owner or operator of a treatment, storage, or disposal facility shall in any way dilute a restricted waste or the residual from treatment of a restricted waste as a substitute for adequate treatment to achieve compliance with Subpart D of this part, to circumvent the effective date of a prohibition in Subpart C of this part, to otherwise avoid a prohibition in Subpart C of this part, or to circumvent a land dis-

facilities that dispose of hazardous waste in land treatment facilities.

§ 267.41 General design requirements.

Each land treatment facility must include a runoff control system designed to comply with § 267.10 of this part. The design of the facility runoff control system must reflect a consideration of:

(a) The physical, biological and chemical characteristics of the waste in the facility;

(b) Climatic conditions in the area;

(c) The volume of runoff that could be produced at the facility; and

(d) The available options for managing any contaminated runoff that is collected at the facility.

§ 267.42 General operating requirements.

(a) Incompatible wastes, or incompatible wastes and materials, must not be placed in the same land treatment facility, unless § 264.17(b) is complied with. The waste analysis plan required by § 264.13 must include the analyses needed to comply with this paragraph.

(b) The runoff control system must be operated and maintained in a manner that will comply with § 267.10 of this part. The procedures for operating the runoff control system must reflect a consideration of:

(1) The volume of contaminated runoff produced at the facility;

(2) The capacity of any runoff collection device at the facility;

(3) Climatic conditions in the area; and

(4) The quality of the runoff produced and the available options for managing any contaminated runoff from the facility.

(c) The land treatment facility must be operated to treat the waste in the facility to the extent necessary to comply with § 267.10 of this part.

(d) If food-chain crops are grown at the facility, the facility must be operated in a manner designed to protect the quality of those crops to the extent necessary to comply with § 267.10 of this part. Proper operation of a land treatment facility on which food-chain crops are grown must reflect a consideration of:

(1) The characteristics of the soil, including the pH;

(2) The volume and chemical, biological and physical characteristics of the waste in the facility;

(3) The type of crop to be grown;

(4) The manner in which such crop marketed (e.g. direct sale to consumers, use as an animal feed grain);

(5) The potential future uses of the facility;

(6) The potential for crop uptake of waste constituents; and

(7) The potential exposure of workers who handle the crop to waste constituents.

(e) The treatment facility must be inspected at a sufficient frequency to assure compliance with § 267.10 of this part.

§ 267.43 Unsaturated zone monitoring.

In addition to the ground-water monitoring program required in Subpart F of this part, a land treatment facility must have an unsaturated zone monitoring program which will assure compliance with § 267.10. An unsaturated zone monitoring program must include an unsaturated zone monitoring system at the facility or at a representative test plot, as well as procedures for sampling, analysis and evaluation of data. The unsaturated zone monitoring program required by this paragraph must reflect a consideration of:

(a) The placement and depth of monitoring wells that is necessary to obtain a representative sample of the success of waste treatment in the facility;

(b) Soil characteristics, including its pH, its permeability and the level of microbial activity in the soil;

(c) Climatic conditions in the area;

(d) The potential for rapid migration of waste constituents through the soil; and

(e) The accessibility of the monitoring system devices for maintenance and repair.

§ 267.44 Closure and post-closure.

(a) A land treatment facility must be closed in a manner that will comply with § 267.10 of this part. The closure plan under § 264.112 of this chapter must specify the measures which will be used to satisfy this paragraph.

Proper closure of a land treatment facility must reflect a consideration of:

(1) The type and amount of waste applied to the facility;

(2) The mobility and expected rate of migration of the waste;

(3) Site location, topography and surrounding land use;

(4) Climatic conditions in the area, including the amount, frequency and pH of precipitation;

(5) Geologic and soil profiles and surface and subsurface hydrology of the site, including cation exchange capacity, total organic carbon and pH of the soil; and

(6) Unsaturated zone monitoring information obtained under § 267.43.

(b) A land treatment facility must be maintained in a manner that complies with § 267.10 of this part during the post-closure period. The post-closure plan under § 264.118 of this chapter must specify the procedures that will be used to satisfy this paragraph. Proper maintenance of a land treatment facility during the post-closure period must reflect a consideration of:

(1) The type and amount of waste applied to the facility;

(2) The mobility and expected rate of migration of the waste;

(3) Site location, topography and surrounding land use;

(4) Climatic conditions in the area, including the amount, frequency and pH of precipitation;

(5) Geologic and soil profiles and surface and subsurface hydrology of the site, including cation exchange capacity, total organic carbon and pH of the soil;

(6) Unsaturated zone monitoring information obtained under § 267.43; and

(7) The maintenance of any ground-water monitoring system at the facility.

§ 267.45 Treatment of waste.

The Regional Administrator may waive any of the requirements in § 267.21, § 267.22 or § 267.23 of this subpart where necessary to achieve treatment of hazardous waste in a land treatment facility, provided that the waiver does not result in non-compliance with § 267.10.

§ 267.46 Additional requirements.

The Regional Administrator may place additional requirements on owners or operators of new land treatment facilities, besides those otherwise required by this subpart, where necessary to comply with § 267.10 of this part.

Subpart F—Ground-Water Monitoring

§ 267.50 Applicability.

Each new hazardous waste landfill, surface impoundment, or land treatment facility must have a ground-water monitoring program, which includes a ground-water monitoring system, procedures for sampling, analysis and evaluation of ground-water data, and appropriate response procedures.

§ 267.51 Ground-water monitoring system.

The ground-water system required by this subpart must be capable of determining the facility's impact on ground-water in the uppermost aquifer so as to assure compliance with § 267.10 of this part. The design of the ground-water monitoring system must reflect a consideration of:

(a) The placement and depth of monitoring wells that is necessary to obtain a representative sample of constituents in the uppermost aquifer, including those present in the ground-water upgradient from the facility;

(b) Measures such as casing which maintain the integrity of the monitoring well bore hole; and

(c) Measures which prevent contamination of ground-water samples.

§ 267.52 Ground-water monitoring procedures.

(a) The ground-water monitoring procedures required by this subpart must be capable of assuring compliance with § 267.10 of this part. The procedures must reflect a consideration of:

(1) Sample collection procedures;

(2) Sample preservation and shipment procedures;

(3) Analytical methods;

(4) Chain of custody control; and

(5) Evaluation procedures, including methods for determining the extent

portunity for public comment. The final decision on a petition will be published in the FEDERAL REGISTER.

(f) Any person granted an extension under this section must immediately notify the Administrator as soon as he has knowledge of any change in the conditions certified to in the application.

(g) Any person granted an extension under this section shall submit written progress reports at intervals designated by the Administrator. Such reports must describe the overall progress made toward constructing or otherwise providing alternative treatment, recovery or disposal capacity; must identify any event which may cause or has caused a delay in the development of the capacity; and must summarize the steps taken to mitigate the delay. The Administrator can revoke the extension at any time if the applicant does not demonstrate a good-faith effort to meet the schedule for completion, if the Agency denies or revokes any required permit, if conditions certified in the application change, or for any violation of this chapter.

(h) Whenever the Administrator establishes an extension to an effective date under this section, during the period for which such extension is in effect:

(1) The storage restrictions under § 268.50(a) do not apply; and

(2) Such hazardous waste may be disposed of at a facility only if each new landfill or surface impoundment unit, each replacement of an existing landfill or surface impoundment unit, and each lateral expansion of an existing landfill or surface impoundment unit at the facility is in compliance with the following requirements:

(i) The landfill, if in interim status, is in compliance with the requirements of Subpart F of Part 265 and § 265.301 (a), (c), and (d) of this chapter; or,

(ii) The landfill, if permitted, is in compliance with the requirements of Subpart F of Part 264 and § 264.301 (c), (d) and (e) of this chapter;

(iii) The surface impoundment, if in interim status, is in compliance with the requirements of Subpart F of Part 265, § 265.221 (a), (c), and (d) of this chapter, and RCRA section 3005(j)(1); or

(iv) The surface impoundment, if permitted, is in compliance with the requirements of Subpart F of Part 264 and § 264.221 (c), (d) and (e) of this chapter.

(v) The landfill, if disposing of containerized liquid hazardous wastes containing PCBs at concentrations greater than or equal to 50 ppm but less than 500 ppm, is also in compliance with the requirements of 40 CFR 761.75 and Parts 264 and 265.

(i) Pending a decision on the application the applicant is required to comply with all restrictions on land disposal under this part once the effective date for the waste has been reached.

(Approved by the Office of Management and Budget under control number 2050-0062)

[51 FR 40638, Nov. 7, 1986; 52 FR 21016, June 4, 1987, as amended at 52 FR 25788, July 8, 1987]

§ 268.6 Petitions to allow land disposal of a waste prohibited under Subpart C of Part 268.

(a) Any person seeking an exemption from a prohibition under Subpart C of this part for the disposal of a restricted hazardous waste in a particular unit or units must submit a petition to the Administrator demonstrating, to a reasonable degree of certainty, that there will be no migration of hazardous constituents from the disposal unit or injection zone for as long as the wastes remain hazardous. The demonstration must include the following components:

(1) An identification of the specific waste and the specific unit for which the demonstration will be made;

(2) A waste analysis to describe fully the chemical and physical characteristics of the subject waste;

(3) A comprehensive characterization of the disposal unit site including an analysis of background air, soil, and water quality.

(b) The demonstration referred to in paragraph (a) of this section must meet the following criteria:

(1) All waste and environmental sampling, test, and analysis data must be accurate and reproducible to the extent that state-of-the-art techniques allow;

(2) All sampling, testing, and estimation techniques for chemical and physical properties of the waste and all environmental parameters must have been approved by the Administrator;

(3) Simulation models must be calibrated for the specific waste and site conditions, and verified for accuracy by comparison with actual measurements;

(4) A quality assurance and quality control plan that addresses all aspects of the demonstration must be approved by the Administrator; and,

(5) An analysis must be performed to identify and quantify any aspects of the demonstration that contribute significantly to uncertainty. This analysis must include an evaluation of the consequences of predictable future events, including, but not limited to, earthquakes, floods, severe storm events, droughts, or other natural phenomena.

(c) Each petition must be submitted to the Administrator.

(d) Each petition must include the following statement signed by the petitioner or an authorized representative:

I certify under penalty of law that I have personally examined and am familiar with the information submitted in this petition and all attached documents, and that, based on my inquiry of those individuals immediately responsible for obtaining the information, I believe that submitted information is true, accurate, and complete. I am aware that there are significant penalties for submitting false information, including the possibility of fine and imprisonment.

(e) After receiving a petition, the Administrator may request any additional information that reasonably may be required to evaluate the demonstration.

(f) If approved, the petition will apply to land disposal of the specific restricted waste at the individual disposal unit described in the demonstration and will not apply to any other restricted waste at that disposal unit, or to that specific restricted waste at any other disposal unit.

(g) The Administrator will give public notice in the FEDERAL REGISTER of the intent to approve or deny a petition and provide an opportunity for public comment. The final decision on a petition will be published in the FEDERAL REGISTER.

(h) The term of a petition granted under this section shall be no longer than the term of the RCRA permit if the disposal unit is operating under a RCRA permit, or up to a maximum of 10 years from the date of approval provided under paragraph (g) of this section if the unit is operating under interim status. In either case, the term of the granted petition shall expire upon the termination or denial of a RCRA permit, or upon the termination of interim status or when the volume limit of waste to be land disposed during the term of petition is reached.

(i) Prior to the Administrator's decision, the applicant is required to comply with all restrictions on land disposal under this part once the effective date for the waste has been reached.

(j) The petition granted by the Administrator does not relieve the petitioner of his responsibilities in the management of hazardous waste under 40 CFR Part 260 through Part 271.

(k) Liquid hazardous wastes containing polychlorinated biphenyls at concentrations greater than or equal to 500 ppm are not eligible for an exemption under this section.

(Approved by the Office of Management and Budget under control number 2050-0062)

[51 FR 40638, Nov. 7, 1986; 52 FR 21016, June 4, 1987, as amended at 52 FR 25789, July 8, 1987]

§ 268.7 Waste analysis.

(a) Except as specified in § 268.32 of this part, the generator must test his waste or an extract developed using the test method described in Appendix I of this part, or use knowledge of the waste, to determine if the waste is restricted from land disposal under this part.

(1) If a generator determines that he is managing a restricted waste under this part and the waste does not meet the applicable treatment standards, or

posal prohibition imposed by RCRA section 3004.

[52 FR 25788, July 8, 1987]

§ 268.4 Treatment surface impoundment exemption.

(a) Wastes which are otherwise prohibited from land disposal under this part may be treated in a surface impoundment or series of impoundments provided that:

(1) Treatment of such wastes occurs in the impoundments;

(2) The residues of the treatment are analyzed, as specified in § 268.7 or § 268.32, to determine if they meet the applicable treatment standards in Subpart D of this part, or, where no treatment standards have been established for the waste, the applicable prohibition levels specified in Subpart C of this part or RCRA section 3004(d). The sampling method, specified in the waste analysis plan under § 264.13 or § 265.13, must be designed such that representative samples of the sludge and the supernatant are tested separately rather than mixed to form homogeneous samples. The treatment residues (including any liquid waste) that do not meet the treatment standards promulgated under Subpart D of this part, or the applicable prohibition levels promulgated under Subpart C of this part or imposed by statute (where no treatment standards have been established), or which are not delisted under § 260.22 of this chapter and no longer exhibit a characteristic of hazardous waste, must be removed at least annually. These residues may not be placed in any other surface impoundment for subsequent management. If the volume of liquid flowing through the impoundment or series of impoundments annually is greater than the volume of the impoundment or impoundments, this flow-through constitutes removal of the supernatant for the purpose of this requirement. The procedures and schedule for the sampling of impoundment contents, the analysis of test data, and the annual removal of residue which does not meet the Subpart D treatment standards, or Subpart C or RCRA section 3004(d) prohibition levels where no treatment standards have been established, must be specified in the facility's waste analysis plan as required under § 264.13 or § 265.13 of this chapter.

(3) The impoundment meets the design requirements of § 264.221(c) or § 265.221(a) of this chapter, regardless that the unit may not be new, expanded, or a replacement, and be in compliance with applicable ground water monitoring requirements of Subpart F of Part 264 or Part 264 of this chapter unless:

(i) Exempted pursuant to § 264.221 (d) or (e) of this chapter, or to § 265.221 (c) or (d) of this chapter; or,

(ii) Upon application by the owner or operator, the Administrator, after notice and an opportunity to comment, has granted a waiver of the requirements on the basis that the surface impoundment:

(A) Has at least one liner, for which there is no evidence that such liner is leaking;

(B) Is located more than one-quarter mile from an underground source of drinking water; and

(C) Is in compliance with generally applicable ground water monitoring requirements for facilities with permits; or,

(iii) Upon application by the owner or operator, the Administrator, after notice and an opportunity to comment, has granted a modification to the requirements on the basis of a demonstration that the surface impoundment is located, designed, and operated so as to assure that there will be no migration of any hazardous constituent into ground water or surface water at any future time.

(4) The owner or operator submits to the Regional Administrator a written certification that the requirements of § 268.4(a)(3) have been met and submits a copy of the waste analysis plan required under § 268.4(a)(2). The following certification is required:

I certify under penalty of law that the requirements of 40 CFR 268.4(a)(3) have been met for all surface impoundments being used to treat restricted wastes. I believe that the submitted information is true, accurate, and complete. I am aware that there are significant penalties for submitting false information, including the possibility of fine and imprisonment.

(b) Evaporation of hazardous constituents as the principal means of treatment is not considered to be treatment for purposes of an exemption under this section.

[51 FR 40638, Nov. 7, 1986; 52 FR 21016, June 4, 1987, as amended at 52 FR 25788, July 8, 1987]

§ 268.5 Procedures for case-by-case extensions to an effective date.

(a) Any person who generates, treats, stores, or disposes of a hazardous waste may submit an application to the Administrator for an extension to the effective date of any applicable restriction established under Subpart C of this part. The applicant must demonstrate the following:

(1) He has made a good-faith effort to locate and contract with treatment, recovery, or disposal facilities nationwide to manage his waste in accordance with the effective date of the applicable restriction established under Subpart C of this Part;

(2) He has entered into a binding contractual commitment to construct or otherwise provide alternative treatment, recovery (e.g., recycling), or disposal capacity that meets the treatment standards specified in Subpart D or, where treatment standards have not been specified, such treatment, recovery, or disposal capacity is protective of human health and the environment.

(3) Due to circumstances beyond the applicant's control, such alternative capacity cannot reasonably be made available by the applicable effective date. This demonstration may include a showing that the technical and practical difficulties associated with providing the alternative capacity will result in the capacity not being available by the applicable effective date;

(4) The capacity being constructed or otherwise provided by the applicant will be sufficient to manage the entire quantity of waste that is the subject of the application;

(5) He provides a detailed schedule for obtaining required operating and construction permits or an outline of how and when alternative capacity will be available;

(6) He has arranged for adequate capacity to manage his waste during an extension and has documented in the application the location of all sites at which the waste will be managed; and

(7) Any waste managed in a surface impoundment or landfill during the extension period will meet the requirements of paragraph (h)(2) of this section.

(b) An authorized representative signing an application described under paragraph (a) of this section shall make the following certification:

I certify under penalty of law that I have personally examined and am familiar with the information submitted in this document and all attachments and that, based on my inquiry of those individuals immediately responsible for obtaining the information, I believe that the information is true, accurate, and complete. I am aware that there are significant penalties for submitting false information, including the possibility of fine and imprisonment.

(c) After receiving an application for an extension, the Administrator may request any additional information which he deems as necessary to evaluate the application.

(d) An extension will apply only to the waste generated at the individual facility covered by the application and will not apply to restricted waste from any other facility.

(e) On the basis of the information referred to in paragraph (a) of this section, after notice and opportunity for comment, and after consultation with appropriate State agencies in all affected States, the Administrator may grant an extension of up to 1 year from the effective date. The Administrator may renew this extension for up to 1 additional year upon the request of the applicant if the demonstration required in paragraph (a) of this section can still be made. In no event will an extension extend beyond 24 months from the applicable effective date specified in Subpart C of Part 268. The length of any extension authorized will be determined by the Administrator based on the time required to construct or obtain the type of capacity needed by the applicant as described in the completion schedule discussed in paragraph (a)(5) of this section. The Administrator will give public notice of the intent to approve or deny a petition and provide an op-

F007—Spent cyanide plating bath solutions from electroplating operations.
F008—Plating bath sludges from the bottom of plating baths from electroplating operations where cyanides are used in the process.
F009—Spent stripping and cleaning bath solutions from electroplating operations where cyanides are used in the process.
F019—Wastewater treatment sludges from the chemical conversion coating of aluminum.

§ 261.32 Wastes

K001—Bottom sediment sludge from the treatment of wastewaters from wood preserving processes that use creosote and/or pentachlorophenol.
K004—Wastewater treatment sludge from the production of zinc yellow pigments.
K008—Over residue from the production of chrome oxide green pigments.
K011—Bottom stream from the wastewater stripper in the production of acrylonitrile.
K013—Bottom stream from the acetonitrile column in the production of acrylonitrile.
K014—Bottoms from the acetonitrile purification column in the production of acrylonitrile.
K015—Still bottoms from the distillation of benzyl chloride.
K016—Heavy ends or distillation residues from the production of carbon tetrachloride.
K017—Heavy ends (still bottoms) from the purification column in the production of epichlorohydrin.
K018—Heavy ends from the fractionation column in ethyl chloride production.
K020—Heavy ends from the distillation of vinyl chloride in vinyl chloride monomer production.
K021—Aqueous spent antimony catalyst waste from fluoromethanes production.
K022—Distillation bottom tars from the production of phenol/acetone from cumene.
K024—Distillation bottoms from the production of phthalic anhydride from naphthalene.
K030—Column bottom or heavy ends from the combined production of trichloroethylene and perchloroethylene.
K031—By-products salts generated in the production of MSMA and cacodylic acid.
K035—Wastewater treatment sludges generated in the production of creosote.
K036—Still bottoms from toluene reclamation distillation in the production of disulfoton.
K037—Wastewater treatment sludge from the production of disulfoton.
K044—Wastewater treatment sludges from the manufacturing and processing of explosives.
K045—Spent carbon from the treatment of wastewater containing explosives.
K046—Wastewater treatment sludges from the manufacturing, formulation and loading of lead-based initiating compounds.
K047—Pink/red water from TNT operations.
K048—Dissolved air flotation (DAF) float from the petroleum refining industry.
K049—Stop oil emulsion solids from the petroleum refining industry.
K050—Heat exchange bundle cleaning sludge from the petroleum refining industry.
K051—API separator sludge from the petroleum refining industry.
K052—Tank bottoms (leaded) from the petroleum refining industry.
K060—Ammonia still lime sludge from coking operations.
K061—Emission control dust/sludge from the primary production of steel in electric furnaces.
K062—Spent pickle liquor from steel finishing operations in chlorine production.
K069—Emission control dust/sludge from secondary lead smelting.
K071—Brine purification muds from the mercury cells process in chlorine production, where separately prepurified brine is not used.
K073—Chlorinated hydrocarbon waste from the purification step of the diaphragm cell process using graphite anodes
K083—Distillation bottoms from aniline production.
K084—Wastewater treatment sludges generated during the production of veterinary pharmaceuticals from arsenic or organo-arsenic compounds.
K085—Distillation of fractionation column bottoms from the production of chlorobenzenes.
K086—Solvent washes and sludges; caustic washes and sludges, or water washes and sludges from cleaning tubs and equipment used in the formulation of ink from pigments, driers, soaps, and stabilizers containing chromium and lead.
K087—Decanter tank tar sludge from coking operations.
K099—Untreated wastewater from the production of 2,4-D.
K101—Distillation tar residues from the distillation of aniline-based compounds in the production of veterinary pharmaceuticals from arsenic or organo-arsenic compounds.
K102—Residue from the use of activated carbon for decolorization in the production of veterinary pharmaceuticals from arsenic or organo-arsenic compounds.
K103—Process residues from aniline extraction from the production of aniline.
K104—Combined wastewater streams generated from nitrobenzene/aniline production.

K106—Waste water treatment sludge from the mercury cell process in chlorine production.

§ 261.33(e) Wastes

P001—Warfarin, when present at concentration greater than 0.3%
P004—Aldrin
P005—Allyl alcohol
P010—Arsenic acid
P011—Arsenic (V) oxide
P012—Arsenic (III) oxide
P015—Beryllium dust
P016—Bis-(chloromethyl) ether
P018—Brucine
P020—Dinoseb
P030—Soluble cyanide salts not elsewhere specified
P036—Dichlorophenylarsine
P037—Dieldrin
P039—Disulfoton
P041—Diethyl-p-nitrophenyl phosphate
P048—2,4-Dinitrophenol
P050—Endosulfan
P058—Fluoracetic acid, sodium salt
P059—Heptachlor
P063—Hydrogen cyanide
P068—Methyl Hydrazine
P069—Methyllactonitrile
P070—Aldicarb
P071—Methyl parathion
P081—Nitroglycerine
P082—N-Nitrosodimethylamine
P084—N-Nitrosomethylvinylamine
P087—Osmium tetraoxide
P089—Parathion
P092—Phenylmercuric acetate
P094—Phorate
P097—Famphur
P102—Propargyl alcohol
P105—Sodium azide
P108—Strychnine and salts
P110—Tetraethyl lead
P115—Thallium (I) sulfate
P120—Vanadium pentoxide
P122—Zinc phosphide, when present at concentrations greater than 10%
P123—Toxaphene

§ 261.33(f) Wastes

U007—Acrylamide
U009—Acrylonitrile
U010—Mitomycin C
U012—Aniline
U016—Benz(c)acridine
U018—Benz(a)anthracene
U019—Benzene
U022—Benzo(a)pyrene
U029—Methyl bromide
U031—n-Butanol
U036—Chlordane, technical
U037—Chlorobenzene
U041—n-Chloro-2,3-epoxypropane
U043—Vinyl chloride
U044—Chloroform
U046—Chloromethyl methyl ether
U050—Chrysene
U051—Creosote
U053—Crotonaldehyde
U061—DDT
U063—Dibenz o (a, h) anthracene
U064—1,2:7,8 Dibenzopyrene
U066—Dibromo-3-chloropropane 1,2-
U067—Ethylene dibromide
U074—1,4-Dichloro-2-butene
U077—Ethane, 1,2-dichloro-
U078—Dichloroethylene, 1,1-
U086—N,N Diethylhydrazine
U089—Diethylstilbestrol
U103—Dimethyl sulfate
U105—2,4-Dinitrotoluene
U108—Dioxane, 1,4-
U115—Ethylene oxide
U122—Formaldehyde
U124—Furan
U129—Lindane
U130—Hexachlorocyclopentadiene
U133—Hydrazine
U134—Hydrofluoric acid
U137—Indeno(1,2,3-cd)pyrene
U151—Mecury
U154—Methanol
U155—Methapyrilene
U157—3-Methylcholanthrene
U158—4,4-Methylene-bis-(2-chloroaniline)
U159—Methyl ethyl ketone
U171—Nitropropane, 2-
U177—N-Nitroso-N-methylurea
U180—N-Nitrosopyrrolidine
U185—Pentachloronitrobenzene
U188—Phenol
U192—Pronamide
U200—Reserpine
U209—Tetrachloroethane, 1,1,2,2-
U210—Tetrachloroethylene
U211—Carbon tetrachloride
U219—Thiourea
U220—Toluene
U221—Toluenediamine
U223—Toluene diisocyanate
U226—Methylchloroform
U227—Trichloroethane, 1,1,2-
U228—Trichloroethylene
U237—Uracil mustard
U238—Ethyl carbamate
U248—Warfarin, when present at concentrations of 0.3% or less
U249—Zinc phosphide, when present at concentrations of 10% or less

§ 268.11 Identification of wastes to be evaluated by June 8, 1989.

EPA will take action under sections 3004(g)(5) and 3004(m) of the Resource Conservation and Recovery Act, by June 8, 1989, for the following wastes (for ease of understanding the wastes have been listed by the section of 40 CFR Part 261 under which they were listed):

where the waste does not comply with the applicable prohibitions set forth in § 268.32 of this part or RCRA section 3004(d), with each shipment of waste the generator must notify the treatment facility in writing of the appropriate treatment standards set forth in Subpart D of this part and any applicable prohibitions set forth in § 268.32 of this part or RCRA section 3004(d). The notice must include the following information:

(i) EPA Hazardous Waste Number;

(ii) The corresponding treatment standards and all applicable prohibitions set forth in § 268.32 or RCRA section 3004(d);

(iii) The manifest number associated with the shipment of waste; and

(iv) Waste analysis data, where available.

(2) If a generator determines that he is managing a restricted waste under this part, and determines that the waste can be land disposed without further treatment, with each shipment of waste he must submit, to the land disposal facility, a notice and a certification stating that the waste meets the applicable treatment standards set forth in Subpart D of this part and the applicable prohibitions set forth in § 268.32 of this part or RCRA section 3004(d).

(i) The notice must include the following information:

(A) EPA Hazardous Waste Number;

(B) The corresponding treatment standards and all appplicable prohibitions set forth in § 268.32 or RCRA section 3004(d);

(C) The manifest number associated with the shipment of waste;

(D) Waste analysis data, where available.

(ii) The certification must be signed by an authorized representative and must state the following:

I certify under penalty of law that I personally have examined and am familiar with the waste through analysis and testing or through knowledge of the waste to support this certification that the waste complies with the treatment standards specified in 40 CFR Part 268 Subpart D and all applicable prohibitions set forth in 40 CFR 268.32 or RCRA section 3004(d). I believe that the information I submitted is true, accurate and complete. I am aware that there are significant penalties for submitting a false certification, including the possiblity of a fine and imprisonment.

(3) If a generator's waste is subject to a case-by-case extension under § 268.5, an exemption under § 268.6, an extension under § 268.1(c)(3), or a nationwide variance under Subpart C, he must forward a notice with the waste to the land disposal facility receiving his waste, stating that the waste is exempt from the land disposal restrictions.

(4) If a generator determines whether the waste is restricted based solely on his knowledge of the waste, all supporting data used to make this determination must be maintained on-site in the generator's files.

(b) For wastes with treatment standards expressed as concentrations in the waste extract (§ 268.41), the owner or operator of the treatment facility must test the treatment residues or an extract of such residues developed using the test method described in Appendix I of this part to assure that the treatment residues or extract meet the applicable treatment standards. For wastes prohibited under § 268.32 of this part or RCRA section 3004(d) which are not subject to any treatment standards under Subpart D of this part, the owner or operator of the treatment facility must test the treatment residues according to the generator testing requirements specified in § 268.32 to assure that the treatment residues comply with the applicable prohibitions. For both circumstances described above, such testing must be performed according to the frequency specified in the facility's waste analysis plan as required by § 264.13 or § 265.13. Where the treatment residues do not comply with the applicable treatment standards or prohibitions, the treatment facility must comply with the notice requirements applicable to generators in paragraph (a)(1) of this section if the treatment residues will be further managed at a different treatment facility.

(1) A notice must be sent with each waste shipment to the land disposal facility which includes the following information:

(i) EPA Hazardous Waste Number;

(ii) The corresponding treatment standards and all applicable prohibitions set forth in § 268.32 or RCRA section 3004(d);

(iii) The manifest number associated with the shipment of waste; and

(iv) Waste analysis data, where available.

(2) The treatment facility must submit a certification with each shipment of waste or treatment residue of a restricted waste to the land disposal facility stating that the waste or treatment residue has been treated in compliance with the applicable performance standards specified in Subpart D of this part and the applicable prohibitions set forth in § 268.32 or RCRA section 3004(d).

(i) For wastes with treatment standards expressed as concentrations in the waste extract or in the waste (§ 268.41 or § 268.43), or for wastes prohibited under § 268.32 of this part or RCRA section 3004(d) which are not subject to any treatment standards under Subpart D of this part, the certification must be signed by an authorized representative and must state the following:

I certify under penalty of law that I have personally examined and am familiar with the treatment technology and operation of the treatment process used to support this certification and that, based on my inquiry of those individuals immediately responsible for obtaining this information, I believe that the treatment process has been operated and maintained properly so as to comply with the performance levels specified in 40 CFR Part 268 Subpart D and all applicable prohibitions set forth in 40 CFR 268.32 or RCRA section 3004(d) without dilution of the prohibited waste. I am aware that there are significant penalties for submitting a false certification, including the possibility of fine and imprisonment.

(ii) For wastes with treatment standards expressed as technologies (§ 268.42), the certification must be signed by an authorized representative and must state the following:

I certify under penalty of law that the waste has been treated in accordance with the requirements of 40 CFR 268.42. I am aware that there are significant penalties for submitting a false certification, including the possibility of fine and imprisonment.

(c) The owner or operator of any land disposal facility disposing any waste subject to restrictions under this part must have records of the notice and certification specified in either paragraph (a) or (b) of this section. The owner or operator of the land disposal facility must test the waste or an extract of the waste or treatment residue developed using the test method described in Appendix I of this part, or using any methods required by generators under § 268.32 of this part, to assure that the wastes or treatment residues are in compliance with the applicable treatment standards set forth in Subpart D of this part and all applicable prohibitions set forth in § 268.32 of this part or RCRA section 3004(d). Such testing must be performed according to the frequency specified in the facility's waste analysis plan as required by § 264.13 or § 265.13.

(Approved by the Office of Management and Budget under control number 2050-0062)

[51 FR 40638, Nov. 7, 1986; 52 FR 21016, June 4, 1987, as amended at 52 FR 25789, July 8, 1987]

Subpart B—Schedule for Land Disposal Prohibition and Establishment of Treatment Standards

SOURCE: 51 FR 19305, May 28, 1986, unless otherwise noted.

§ 268.10 Identification of wastes to be evaluated by August 8, 1988.

EPA will take action under sections 3004(g)(5) and 3004(m), of the Resource Conservation and Recovery Act, by August 8, 1988, for the following wastes (for ease of understanding the wastes have been listed by the section of 40 CFR Part 261 under which they were listed):

§ 261.31 Wastes

F006—Wastewater treatment sludges from electroplating operations except from the following processes: (1) Sulfuric acid anodizing of aluminum; (2) tin plating on carbon steel; (3) zinc plating (segregated basis) on carbon steel; (4) aluminum or zinc-aluminum plating on carbon steel; (5) cleaning/stripping associated with tin, zinc and aluminum plating on carbon steel; and (6) chemical etching and milling of aluminum.

P075—Nicotine and salts
P076—Nitric oxide
P077—p-Nitroaniline
P078—Nitrogen dioxide
P088—Endothall
P093—N-Phenylthiourea
P095—Phosgene
P096—Phosphine
P099—Potassium silver cyanide
P101—Propanenitrile
P103—Selenourea
P109—Tetraethyldithiopyrophosphate
P116—Thiosemicarbazide
P118—Trichloromethanethiol
P119—Ammonium vanadate
P121—Zinc cyanide

§ 261.33(f) Wastes

U001—Acetaldehyde
U004—Acetophenone
U006—Acetyl chloride
U017—Benzal chloride
U024—Bis(2-chloroethoxy)methane
U027—Bis(2-chloroisopropyl)ether
U030—Benzene, 1-bromo-4-phenoxy
U033—Carbonyl fluoride
U034—Chloral
U038—Ethyl-4-4'-dichlorobenzilate
U039—4-Chloro-m-cresol
U042—Vinyl ether, 2-chloroethyl
U045—Methyl chloride
U048—o-Chlorophenol
U052—Cresols
U055—Cumene
U056—Cyclohexane
U068—Methane, dibromo
U069—Dibutyl phthalate
U071—m-Dichlorobenzene
U072—p-Dichlorobenzene
U075—Dichlorodifluoromethane
U076—Ethane, 1,1-dichloro-
U079—1,2-Dichlorethylene
U081—2,4-Dichlorophenol
U082—2,6-Dichlorophenol
U084—1,3-Dichloropropene
U085—2,2'-Bioxirane
U087—0,0,-Diethyl-S-methyl-dithiophosphate
U088—Diethyl phthalate
U090—Dihydrosafrole
U091—3,3'-Dimethoxybenzidine
U096—alpha,alpha-Dimethylbenzylhydroxyperoxide
U102—Dimethyl phthalate
U112—Ethyl acetate
U113—Ethyl acrylate
U117—Ethyl ether
U118—Ethylmethacrylate
U120—Fluoranthene
U121—Trichloromonofluoromethane
U123—Formic acid
U125—Furfural
U126—Glycidylaldehyde
U132—Hexachlorophene
U136—Cacodylic acid
U139—Iron dextran
U141—Isosafrole
U145—Lead phosphate
U148—Maleic hydrazide
U152—Methacrylonitrile
U153—Methanethiol
U156—Methyl chlorocarbonate
U160—Methyl ethyl ketone peroxide
U166—1,4-Naphthaquinone
U167—1-Naphthylamine
U181—5-Nitro-o-toluidine
U182—Paraldehyde
U183—Pentachlorobenzene
U184—Pentachloroethane
U186—1,3-Pentadiene
U187—Phenacetin
U190—Phthalic anhydride
U191—2-Picoline
U194—1-Propanamine
U197—p-Benzoquinone
U201—Resorcinol
U202—Saccharin and salts
U204—Selenious acid
U207—1,2,4,5-tetrachlorobenzene
U222—o-Toluidine hydrochloride
U225—Bromoform
U234—Sym-Trinitrobenzene
U236—Trypan blue
U240—2,4-D, salts and esters
U243—Hexachloropropene
U246—Cyanogen bromide
U247—Methoxychlor

Wastes identified as hazardous based on a characteristic alone (i.e., corrosivity, reactivity, ignitability and EP toxicity).

§ 268.13 Schedule for wastes identified or listed after November 8, 1984.

In the case of any hazardous waste identified or listed under section 3001 after November 8, 1984, the Administrator shall make a land disposal prohibition determination within 6 months after the date of identification or listing.

Subpart C—Prohibitions on Land Disposal

SOURCE: 51 FR 40641, Nov. 7, 1986, unless otherwise noted.

§ 268.30 Waste specific prohibitions—Solvent wastes.

(a) Effective November 8, 1986, the spent solvent wastes specified in 40 CFR 261.31 as EPA Hazardous Waste Nos. F001, F002, F003, F004, and F005, are prohibited from land disposal (except in an injection well) unless one or more of the following conditions apply:

(1) The generator of the solvent waste is a small quantity generator of 100–1000 kilograms of hazardous waste per month; or

(2) The solvent waste is generated from any response action taken under the Comprehensive Environmental Response, Compensation and Liability Act of 1980 (CERCLA) or any corrective action taken under the Resource Conservation and Recovery Act (RCRA), except where the waste is contaminated soil or debris not subject to the provisions of this chapter until November 8, 1988; or

(3) The initial generator's solvent waste is a solvent-water mixture, solvent-containing sludge or solid, or solvent-contaminated soil (non-CERCLA or RCRA corrective action) containing less than 1 percent total F001–F005 solvent constituents listed in Table CCWE of § 268.41 of this part.

(4) The solvent waste is a residue from treating a waste described in paragraph (a)(1), (a)(2), or (a)(3) of this section; or the solvent waste is a residue from treating a waste not described in paragraph (a)(1), (a)(2), or (a)(3) of this section provided such residue belongs to a different treatability group than the waste as initially generated and wastes belonging to such a treatability group are described in paragraph (a)(3) of this section.

(b) Effective November 8, 1988, the F001–F005 solvent wastes listed in paragraphs (a) (1), (2), and (3) of this section are prohibited from land disposal. Between November 8, 1986, and November 8, 1988, wastes included in paragraphs (a) (1), (2), and (3) of this section may be disposed of in a landfill or surface impoundment only if the facility is in compliance with the requirements specified in § 268.5(h)(2).

(c) The requirements of paragraphs (a) and (b) of this section do not apply if:

(1) The wastes meet the standards of Subpart D of this part; or

(2) Persons have been granted an exemption from a prohibition pursuant to a petition under § 268.6, with respect to those wastes and units covered by the petition; or

(3) Persons have been granted an extension to the effective date of a prohibition pursuant to § 268.5, with respect to those wastes covered by the extension.

[51 FR 40641, Nov. 7, 1986; 52 FR 21017, June 4, 1987, as amended at 52 FR 25790, July 8, 1987]

EFFECTIVE DATE NOTE: Section 268.30 was added at 51 FR 40641, Nov. 7, 1986. Paragraph (b) set forth above becomes effective on November 8, 1988.

§ 268.31 Waste specific prohibitions—Dioxin—containing wastes.

(a) Effective November 8, 1988, the dioxin-containing wastes specified in 40 CFR 261.31 as EPA Hazardous Waste Nos. F020, F021, F022, F023, F026, F027, and F028, are prohibited from land disposal.

(b) The requirements of paragraph (a) of this section do not apply if:

(1) The wastes meet the standards of Subpart D of this part; or,

(2) Persons have been granted an exemption from a prohibition pursuant to a petition under § 268.6, with respect to those wastes and units covered by the petition; or

(3) Persons have been granted an extension from the effective date of a prohibition pursuant to § 268.5, with respect to those wastes covered by the extension.

(c) Between November 8, 1986, and November 8, 1988, wastes included in paragraph (a) of this section may be disposed of in a landfill or surface impoundment only if the facility is in compliance with the requirements specified in § 268.5(h)(2) and all other applicable requirements of Parts 264 and 265 of this chapter.

[51 FR 40641, Nov. 7, 1986; 52 FR 21017, June 4, 1987]

EFFECTIVE DATE NOTE: Section 268.31 was added at 51 FR 40641, Nov. 7, 1986. Paragraph (a) set forth above becomes effective on November 8, 1988.

§ 268.32 Waste specific prohibitions—California list wastes.

(a) Effective July 8, 1987, the following hazardous wastes are prohibited from land disposal (except in injection wells):

(1) Liquid hazardous wastes having a pH less than or equal to two (2.0);

(2) Liquid hazardous wastes containing polychlorinated biphenyls (PCBs)

§ 261.31 Wastes

F010—Quenching bath sludge from oil baths from metal heat treating operations where cyanides are used in the process.
F011—Spent cyanide solutions from salt bath pot cleaning from metal heat treating operations.
F012—Quenching wastewater treatment sludges from metal heat operations where cyanides are used in the process.
F024—Wastes including but not limited to, distillation residues, heavy ends, tars and reactor clean-out wastes from the production of chlorinated aliphatic hydrocarbons, having carbon content from one to five, utilizing free radical catalyzed processes. [This listing does not include light ends, spent filters and filter aids, spend desiccants, wastewater, wastewater treatment sludges, spent catalysts, and wastes listed in § 261.32.].

§ 261.32 Wastes

K009—Distillation bottoms from the production of acetaldehyde from ethylene.
K010—Distillation side cuts from the productions of acetaldehyde from ethylene.
K019—Heavy ends from the distillation of ethylene dichloride in ethylene dichloride production.
K025—Distillation bottoms from the production of nitrobenzene by the nitration of benzene.
K027—Centrifuge and distillation residues from toluene diisocyanate production.
K028—Spent catalyst from the hydrochlorinator reactor in the production of 1,1,1-trichloroethane.
K029—Waste from the product steam stripper in the production of 1,1,1-trichloroethane.
K038—Wastewater from the washing and stripping of phorate production.
K039—Filter cake from the filtration of diethylphosphoro-dithioic acid in the production of phorate.
K040—Wastewater treatment sludge from the production of phorate.
K041—Wastewater treatment sludge from the production of toxaphene.
K042—Heavy ends or distillation residues from the distillation of tetrachlorobenzene in the production of 2,4,5-T.
K043—2,6-Dichlorophenol waste from the production of 2,4-D.
K095—Distillation bottoms from the production of 1,1,1-trichloroethane.
K096—Heavy ends from the heavy ends column from the production of 1,1,1-trichloroethane.
K097—Vacuum stripper discharge from the chlordane chlorinator in the production of chlordane.
K098—Untreated process wastewater from the production of toxaphene
K105—Separated aqueous stream from the reactor product washing step in the production of chlorobenzenes.

§ 261.33(e) Wastes

P002—1-Acetyl-2-thiourea
P003—Acrolein
P007—5-(Aminoethyl)-3-isoxazolol
P008—4-Aminopyridine
P014—Thiophenol
P026—1-(o-Chlorophenyl)thiourea
P027—Propanenitrile, 3-chloro
P029—Copper cyanides
P040—O,O-Diethyl o-pyrazinyl phosphorothioate
P043—Diisopropyl fluorophosphate
P044—Dimethoate
P049—2,4-Dithiobiuret
P054—Aziridine
P057—Fluoracetamide
P060—Isodrin
P062—Hexaethyltetraphosphate
P066—Methomyl
P067—2-Methylaziridine
P072—Alpha-naphthylthiourea (ANTU)
P074—Nickel cyanide
P085—Octamethylpyrophosphoramide
P098—Potassium cyanide
P104—Silver cyanide
P106—Sodium cyanide
P107—Strontium sulfide
P111—Tetraethylpyrophosphate
P112—Tetranitromethane
P113—Thallic oxide
P114—Thallium (I) selenite

§ 261.33(f) Wastes

U002—Acetone
U003—Acetonitrile
U005—o-Acetylaminofluorene
U008—Acrylic acid
U011—Amitrole
U014—Auramine
U015—Azaserine
U020—Benzenesulfonyl chloride
U021—Benzidine
U023—Benzotrichloride
U025—Dichloroethyl ether
U026—Chlornaphazine
U028—Bis-(2-ethylhexyl)phthalate
U032—Calcium chromate
U035—Chlorambucil
U047—Beta-chloronaphthalene
U049—4-Chloro-o-toluidine, hydrochloride
U057—Cyclohexanone
U058—Cyclophosphamide
U059—Daunomycin
U060—DDD
U062—Diallate
U070—o-Dichlorobenzene
U073—Dichlorobenzidene, 3,3-
U080—Methylene chloride
U083—Dichloropropane, 1,2-
U092—Dimethylamine
U093—Dimethylaminoazobenzene

U094—Dimethylbenz(a)anthracene,7,12-
U095—Dimethylbenzidine,3,3'-
U097—Dimethylcarbamoyl chloride
U098—Dimethylhydrazine, 1,1-
U099—Dimethylhydrazine, 1,2-
U101—Dimethylphenol, 2,4-
U106—Dinitrotoluene, 2,6-
U107—Di-n-octyl phthalate
U109—1,2,-Diphenylhydrazine
U110—Dipropylamine
U111—Di-N-Propylnitrosamine
U114—Ethylenebis-(dithiocarbamic acid)
U116—Ethylene thiourea
U119—Ethyl methanesulfonate
U127—Hexachlorobenzene
U128—Hexachlorobutadiene
U131—Hexachloroethane
U135—Hydrogen sulfide
U138—Methyl iodide
U140—Isobutyl alcohol
U142—Kepone
U143—Lasiocarpine
U144—Lead acetate
U146—Lead subacetate
U147—Maleic anhydride
U149—Malononitrile
U150—Melphalan
U161—Methyl isobutyl ketone
U162—Methyl methacrylate
U163—N-Methyl-N-nitro-N-nitrosoguanidine
U164—Methylthiouracil
U165—Naphthalene
U168—Napthylamine, 2-
U169—Nitrobenzene
U170—p-Nitrophenol
U172—N-Nitroso-di-n-butylamine
U173—N-Nitroso-diethanolamine
U174—N-Nitroso-diethylamine
U176—N-Nitroso-N-ethylurea
U178—N-Nitroso-N-methylurethane
U179—N-Nitrosopiperidine
U189—Phosphorus sulfide
U193—1,3-Propane sultone
U196—Pyridine
U203—Safrole
U205—Selenium disulfide
U206—Streptozotocin
U208—Terachloroethane, 1,1,1,2-
U213—Tetrahydrofuran
U214—Thallium (I) acetate
U215—Thallium (I) carbonate
U216—Thallium (I) chloride
U217—Thallium (I) nitrate
U218—Thioacetamide
U235—Tris (2,3-Dibromopropyl) phosphate
U239—Xylene
U244—Thiram

§ 268.12 Identification of wastes to be evaluated by May 8, 1990.

EPA will take action under sections 3004(g)(5) and 3004(m) of the Resource Conservation and Recovery Act, by May 8, 1990, for the following wastes (for ease of understanding, the wastes have been listed by the section of 40 CFR Part 261 under which they were listed):

§ 261.32 Wastes

K002—Wastewater treatment sludge from the production of chrome yellow and orange pigments.
K003—Wastewater treatment sludge from the production of molybdate orange pigments.
K005—Wastewater treatment sludge from the production of chrome green pigments.
K006—Wastewater treatment sludge from the production of chrome oxide green pigments (anhydrous and hydrated).
K007—Wastewater treatment sludge from the production of iron blue pigments.
K023—Distillation light ends from the production of phthalic anhydride from naphthalene.
K026—Stripping still tails from the production of methyl ethyl pyridines.
K032—Wastewater treatment sludge from the production of chlordane.
K033—Wastewater and scrub water from the chlorination of cyclopentadiene in the production of chlordane.
K034—Filter solids from the hexachlorocyclopentadiene in the production of chlordane.
K093—Distillation light ends from the production of phthalic anhydride from orthoxylene.
K094—Distillation bottoms from the production of phthalic anhydride from orthoxylene.
K100—Waste leaching solution from acid leaching of emission control dust/sludge from secondary lead smelting.

§ 261.33(e) Wastes

P006—Aluminum phosphide
P009—Ammonium picrate
P013—Barium cyanide
P017—Bromoacetone
P021—Calcium cyanide
P022—Carbon disulfide
P023—Chloroacetaldehyde
P024—p-Chloroaniline
P028—Benzyl chloride
P031—Cyanogen
P033—Cyanogen chloride
P034—4,6-Dinitro-o-cyclohexylphenol
P038—Diethylarsine
P042—Epinephrine
P045—Thiofanox
P046—Alpha, alpha-Dimethylphenethylamine
P047—4,6-Dinitro-o-cresol and salts
P051—Endrin
P056—Fluorine
P064—Methyl isocyanate
P065—Mercury fulminate
P073—Nickel carbonyl

method approved by the Administrator.

(1) Liquid hazardous wastes containing polychlorinated biphenyls (PCBs) at concentrations greater than or equal to 50 ppm but less than 500 ppm must be incinerated in accordance with the technical requirements of 40 CFR 761.70 or burned in high efficiency boilers in accordance with the technical requirements of 40 CFR 761.60. Liquid hazardous wastes containing polychlorinated biphenyls (PCBs) at concentrations greater than or equal to 500 ppm must be incinerated in accordance with the technical requirements of 40 CFR 761.70. Thermal treatment under this section must also be in compliance with applicable regulations in Parts 264, 265, and 266.

(2) Nonliquid hazardous wastes containing halogenated organic compounds (HOCs) in total concentration greater than or equal to 1,000 mg/kg and liquid HOC-containing wastes that are prohibited under § 268.32(e)(1) of this part must be incinerated in accordance with the requirements of Part 264 Subpart O or Part 265 Subpart O. These treatment standards do not apply where the waste is subject to a Part 268 Subpart C treatment standard for a specific HOC (such as a hazardous waste chlorinated solvent for which a treatment standard is established under § 268.41(a)).

(b) Any person may submit an application to the Administrator demonstrating that an alternative treatment method can achieve a measure of performance equivalent to that achievable by methods specified in paragraph (a) of this section. The applicant must submit information demonstrating that his treatment method is in compliance with Federal, state, and local requirements and is protective of human health and the environment. On the basis of such information and any other available information, the Administrator may approve the use of the alternative treatment method if he finds that the alternative treatment method provides a measure of performance equivalent to that achieved by methods specified in paragraph (a) of this section. Any approval must be stated in writing and may contain such provisions and conditions as the Administrator deems appropriate. The person to whom such approval is issued must comply with all limitations contained in such a determination.

[51 FR 40642, Nov. 7, 1986, as amended at 52 FR 25790, July 8, 1987]

§ 268.43 Treatment standards expressed as waste concentrations. [Reserved]

§ 268.44 Variance from a treatment standard.

(a) Where the treatment standard is expressed as a concentration in a waste or waste extract and a waste cannot be treated to the specified level, or where the treatment technology is not appropriate to the waste, the generator or treatment facility may petition the Administrator for a variance from the treatment standard. The petitioner must demonstrate that because the physical or chemical properties of the waste differs significantly from wastes analyzed in developing the treatment standard, the waste cannot be treated to specified levels or by the specified methods.

(b) Each petition must be submitted in accordance with the procedures in § 260.20.

(c) Each petition must include the following statement signed by the petitioner or an authorized representative:

I certify under penalty of law that I have personally examined and am familiar with the information submitted in this petition and all attached documents, and that, based on my inquiry of those individuals immediately responsible for obtaining the information, I believe that the submitted information is true, accurate, and complete. I am aware that these are significant penalties for submitting false information, including the possibility of fine and imprisonment.

(d) After receiving a petition for variance from a treatment standard, the Administrator may request any additional information or samples which he may require to evaluate the petition. Additional copies of the complete petition may be requested as needed to send to affected states and Regional Offices.

(e) The Administrator will give public notice in the FEDERAL REGISTER of the intent to approve or deny a petition and provide an opportunity for public comment. The final decision on a variance from a treatment standard will be published in the FEDERAL REGISTER.

(f) A generator, treatment facility, or disposal facility that is managing a waste covered by a variance from the treatment standards must comply with the waste analysis requirements for restricted wastes found under § 268.7.

(g) During the petition review process, the applicant is required to comply with all restrictions on land disposal under this part once the effective date for the waste has been reached.

[51 FR 40642, Nov. 7, 1986; 52 FR 21017, June 4, 1987]

Subpart E—Prohibitions on Storage

§ 268.50 Prohibitions on storage of restricted wastes.

(a) Except as provided in this section, the storage of hazardous wastes restricted from land disposal under Subpart C of this part of RCRA section 3004 is prohibited, unless the following conditions are met:

(1) A generator stores such wastes in tanks or containers on-site solely for the purpose of the accumulation of such quantities of hazardous waste as necessary to facilitate proper recovery, treatment, or disposal and the generator complies with the requirements in § 262.34 of this chapter. (A generator who is in existence on the effective date of a regulation under this part and who must store hazardous wastes for longer than 90 days due to the regulations under this Part becomes an owner/operator of a storage facility and must obtain a RCRA permit. Such a facility may qualify for interim status upon compliance with the regulations governing interim status under 40 CFR 270.70).

(2) An owner/operator of a hazardous waste treatment, storage, or disposal facility stores such wastes in tanks or containers solely for the purpose of the accumulation of such quantities of hazardous waste as necessary to facilitate proper recovery, treatment, or disposal and:

(i) Each container is clearly marked to identify its contents and the date each period of accumulation begins;

(ii) Each tank is clearly marked with a description of its contents, the quantity of each hazardous waste received, and the date each period of accumulation begins, or such information for each tank is recorded and maintained in the operating record at that facility. Regardless of whether the tank itself is marked, an owner/operator must comply with the operating record requirements specified in § 264.73 or § 265.73.

(3) A transporter stores manifested shipments of such wastes at a transfer facility for 10 days or less.

(b) An owner/operator of a treatment, storage or disposal facility may store such wastes for up to one year unless the Agency can demonstrate that such storage was not solely for the purpose of accumulation of such quantities of hazardous waste as are necessary to facilitate proper recovery, treatment, or disposal.

(c) A owner/operator of a treatment, storage or disposal facility may store such wastes beyond one year; however, the owner/operator bears the burden of proving that such storage was solely for the purpose of accumulation of such quantities of hazardous waste as are necessary to facilitate proper recovery, treatment, or disposal.

(d) The prohibition in paragraph (a) of this section does not apply to the wastes which are the subject of an approved petition under § 268.6 or a nationwide variance contained in Subpart C of this part or an approved case-by-case extension under § 268.5.

(e) The prohibition in paragraph (a) of this section does not apply to hazardous wastes that meet the treatment standards specified under §§ 268.41, 268.42, and 268.43 or the treatment standards specified under the variance in § 268.44, or, where treatment standards have not been specified, is in compliance with the applicable prohibitions specified in § 268.32 or RCRA section 3004.

(f) Liquid hazardous wastes containing polychlorinated biphenyls (PCBs) at concentrations greater than or equal to 50 ppm must be stored at a facility that meets the requirements of

at concentrations greater than or equal to 50 ppm;

(3) Liquid hazardous wastes that are primarily water and contain halogenated organic compounds (HOCs) in total concentration greater than or equal to 1,000 mg/l and less than 10,000 mg/l HOCs.

(b)—(c) [Reserved]

(d) The requirements of paragraph (a) of this section do not apply until November 8, 1988 where the wastes are contaminated soil or debris resulting from a response action taken under section 104 or 106 of the Comprehensive Environmental Response, Compensation, and Liability Act or a corrective action required under RCRA Subtitle C.

(e) Effective July 8, 1989, the following hazardous wastes are prohibited from land disposal (subject to any regulations that may be promulgated with respect to disposal in injection wells):

(1) Liquid hazardous wastes that contain HOCs in total concentration greater than or equal to 1,000 mg/l and are not prohibited under paragraph (a)(3) of this section; and

(2) Nonliquid hazardous wastes containing HOCs in total concentration greater than or equal to 1,000 mg/kg.

(f) Between July 8, 1987 and July 8, 1989, the wastes described in paragraphs (e)(1) and (e)(2) of this section may be disposed of in a landfill or surface impoundment only if the facility is in compliance with the requirements specified in § 268.5(h)(2).

(g) The requirements of paragraphs (a) and (e) of this section do not apply if:

(1) Persons have been granted an exemption from a prohibition pursuant to a petition under § 268.6, with respect to those wastes and units covered by the petition (except for liquid hazardous wastes containing polychlorinated biphenyls at concentrations greater than or equal to 500 ppm which are not eligible for such exemptions); or

(2) Persons have been granted an extension to the effective date of a prohibition pursuant to § 268.5, with respect to those wastes covered by the extension; or

(3) The wastes meet the applicable standards specified in Subpart D of this part or, where treatment standards are not specified, the wastes are in compliance with the applicable prohibitions set forth in this section or RCRA section 3004(d).

(h) The prohibitions and effective dates specified in paragraphs (a)(3) and (e) of this section do not apply where the waste is subject to a Part 268 Subpart C prohibition and effective date for a for a specified HOC (such as a hazardous waste chlorinated solvent, see e.g., § 268.30(a)).

(i) To determine whether or not a waste is a liquid under paragraphs (a) and (e) of this section and under RCRA section 3004(d), the following test must be used: Method 9095 (Paint Filter Liquids Test) as described in "Test Methods for Evaluating Solid Wastes, Physical/Chemical Methods," EPA Publication No. SW-846. (Incorporated by reference, see § 260.11(a) of this chapter.)

(j) Except as otherwise provided in this paragraph, the waste analysis and recordkeeping requirements of § 268.7 are applicable to wastes prohibited under this part or RCRA section 3004(d):

(1) The initial generator of a liquid hazardous waste must test his waste (not an extract or filtrate) in accordance with the procedures specified in § 261.22(a)(1), or use knowledge of the waste, to determine if the waste has a pH less than or equal to two (2.0). If the liquid waste has a pH less than or equal to two (2.0), it is restricted from land disposal and all requirements of Part 268 are applicable, except as otherwise specified in this section.

(2) The initial generator of either a liquid hazardous waste containing polychlorinated biphenyls (PCBs) or a liquid or nonliquid hazardous waste containing halogenated organic compounds (HOCs) must test his waste (not an extract or filtrate), or use knowledge of the waste, to determine whether the concentration levels in the waste equal or exceed the prohibition levels specified in this section. If the concentration of PCBs or HOCs in the waste is greater than or equal to the prohibition levels specified in this section, the waste is restricted from

land disposal and all requirements of Part 268 are applicable, except as otherwise specified in this section.

[52 FR 25790, July 8, 1987, as amended at 52 FR 41296, Oct. 27, 1987]

Subpart D—Treatment Standards

SOURCE: 51 FR 40642, Nov. 7, 1986, unless otherwise noted.

§ 268.40 Applicability of treatment standards.

(a) A restricted waste identified in this subpart may be land disposed without further treatment only if an extract of the waste or of the treatment residue of the waste developed using the test method in Appendix I of this part does not exceed the value shown in Table CCWE of § 268.41 for any hazardous constituent listed in the Table CCWE for that waste.

(b) A restricted waste for which a treatment technology is specified under § 268.42(a) may be land disposed after it is treated using that specified technology or an equivalent treatment method approved by the Administrator under the procedures set forth in § 268.42(b).

[52 FR 25790, July 8, 1987]

§ 268.41 Treatment standards expressed as concentrations in waste extract.

(a) Table CCWE identifies the restricted wastes and the concentrations of their associated hazardous constituents which may not be exceeded by the extract of a waste or waste treatment residual developed using the test method in Appendix I of this part for the allowable land disposal of such waste. (Appendix II of this part provides Agency guidance on treatment methods that have been shown to achieve the Table CCWE levels for the respective wastes. Appendix II is not a regulatory requirement but is provided to assist generators and owners/operators in their selection of appropriate treatment methods.)

TABLE CCWE—CONSTITUENT CONCENTRATIONS IN WASTE EXTRACT

F001—F005 spent solvents	Concentration (in mg/l)	
	Wastewaters containing spent solvents	All other spent solvent wastes
Acetone	0.05	0.59
n-Butyl alcohol	5.0	5.0
Carbon disulfide	1.05	4.81
Carbon tetrachloride	.05	.96
Chlorobenzene	.15	.05
Cresols (and cresylic acid)	2.82	.75
Cyclohexanone	.125	.75
1,2-Dichlorobenzene	.65	.125
Ethyl acetate	.05	.75
Ethylbenzene	.05	.053
Ethyl ether	.05	.75
Isobutanol	5.0	5.0
Methanol	.25	.75
Methylene chloride	.20	.96
Methylene chloride (from the pharmaceutical industry	12.7	.96
Methyl ethyl ketone	0.05	0.75
Methyl isobutyl ketone	0.05	0.33
Nitrobenzene	0.66	0.125
Pyridine	1.12	0.33
Tetrachloroethylene	0.079	0.05
Toluene	1.12	0.33
1,1,1-Trichloroethane	1.05	0.41
1,1,2-Trichloro-1,2,2-Trifluoroethane	1.05	0.96
Trichloroethylene	0.062	0.091
Trichlorofluoromethane	0.05	0.96
Xylene	0.05	0.15

F020–F023 and F026–F028 dioxin containing wastes	Concentration
HxCDD—All Hexachlorodibenzo-p-dioxins	< 1 ppb
HxCDF—All Hexachlorodibenzofurans	< 1 ppb
PeCDD—All Pentachlorodibenzo-p-dioxins	< 1 ppb
PeCDF—All Pentachlorodibenzofurans	< 1 ppb
TCDD—All Tetrachlorodibenzo-p-dioxins	< 1 ppb
TCDF—All Tetrachlorodibenzofurans	< 1 ppb
2,4,5-Trichlorophenol	< 0.05 ppm
2,4,6-Trichlorophenol	< 0.05 ppm
2,3,4,6-Tetrachlorophenol	< 0.10 ppm
Pentachlorophenol	< 0.01 ppm

(b) When wastes with differing treatment standards for a constituent of concern are combined for purposes of treatment, the treatment residue must meet the lowest treatment standard for the constituent of concern.

[51 FR 40642, Nov. 7, 1986; 52 FR 21017, June 4, 1987]

§ 268.42 Treatment standards expressed as specified technologies.

(a) The following wastes must be treated using the identified technology or technologies, or an equivalent

5.1.1 Reagent water for volatile extractions may be generated by passing tap water through a carbon filter bed containing about 500 grams of activated carbon (Calgon Corp., Filtrasorb-300 or equivalent).

5.1.2 A water purification system (Millipore Super-Q or equivalent) may also be used to generate reagent water for volatile extractions.

5.1.3 Reagent water for volatile extractions may also be prepared by boiling water for 15 minutes. Subsequently, while maintaining the water temperature at 90± 5°C, bubble a contaminant-free inert gas (e.g., nitrogen) through the water for 1 hour. While still hot, transfer the water to a narrow-mouth screw-cap bottle under zero-headspace and seal with a Teflon-lined septum and cap.

5.2 1.0 N Hydrochloric acid (HCl) made from ACS reagent grade.

5.3 1.0 N Nitric acid (HNO_3) made from ACS reagent grade.

5.4 1.0 N Sodium hydroxide (NaOH) made from ACS reagent grade.

5.5 Glacial acetic acid (HOAc) ACS reagent grade.

5.6 *Extraction fluid:*

5.6.1 Extraction fluid #1: This fluid is made by adding 5.7 mL glacial HOAc to 500 mL of the appropriate water (see Step 5.1), adding 64.3 mL of 1.0 N NaOH, and diluting to a volume of 1 liter. When correctly prepared, the pH of this fluid will be 4.93 ± 0.05.

5.6.2 Extraction fluid #2: This fluid is made by diluting 5.7 mL glacial HOAc with ASTM Type II water (see Step 5.1) to a volume of 1 liter. When correctly prepared, the pH of this fluid will be 2.88 ± 0.05.

NOTE: It is suggested that these extraction fluids be monitored frequently for impurities. The pH should be checked prior to use to ensure that these fluids are made up accurately.

5.7 Analytical standards shall be prepared according to the appropriate analytical method.

6.0 SAMPLE COLLECTION, PRESERVATION, AND HANDLING

6.1 All samples shall be collected using an appropriate sampling plan.

6.2 At least two separate representative samples of a waste should be collected. If volatile organics are of concern, a third sample should be collected. The first sample is used in several preliminary TCLP evaluations (e.g., to determine the percent solids of the waste; to determine if the waste contains insignificant solids (i.e., the waste is its own extract after filtration); to determine if the solid portion of the waste requires particle-size reduction; and to determine which of the two extraction fluids are to be used for the non-volatile TCLP extraction of the waste). These preliminary evaluations are identified in Section 7.0. The second and, if required, third samples are extracted using the TCLP non-volatile procedure (Section 8.0) and volatile procedure (Section 9.0), respectively.

6.3 Preservatives shall not be added to samples.

6.4 Samples can be refrigerated unless refrigeration results in irreversible physical change to the waste (e.g., precipitation).

6.5 When the waste is to be evaluated for volatile contaminants, care should be taken to minimize the loss of volatiles. Samples shall be taken and stored in a manner to prevent the loss of volatile contaminants. If possible, it is recommended that any necessary particle-size reduction should be conducted as the sample is being taken (See Step 8.5).

6.6 TCLP extracts should be prepared for analysis and analyzed as soon as possible following extraction. If they need to be stored, even for a short period of time, storage shall be a 4° C, and samples for volatiles analysis shall not be allowed to come into contact with the atmosphere (i.e., no headspace). See Section 10.0 (QA requirements) for acceptable sample and extract holding times.

7.0 PRELIMINARY TCLP EVALUATIONS

The preliminary TCLP evaluations are performed on a minimum 100 gram representative sample of waste that will not actually undergo TCLP extraction (designated as the first sample in Step 6.2). These evaluations include preliminary determination of the percent solids of the waste; determination of whether the waste contains insignificant solids, and is therefore, its own extract after filtration; determination of whether the solid portion of the waste requires particle-size reduction; and determination of which of the two extraction fluids are to be used for the non-volatile TCLP extraction of the waste.

7.1 *Preliminary determination of percent solids:* Percent solids is defined as that fraction of a waste sample (as a percentage of the total sample) from which no liquid may be forced out by an applied pressure, as described below.

7.1.1 If the waste will obviously yield no free liquid when subjected to pressure filtration (i.e., is 100% solids) proceed to Step 7.4.

7.1.2 If the sample is liquid or multiphasic, liquid/solid separation to make a preliminary determination of percent solids is required. This involves the filtration device described in Step 4.3.2 and is outlined in Steps 7.1.3 through 7.1.9.

7.1.3 Pre-weigh the filter and the container that will receive the filtrate.

7.1.4 Assemble the filter holder and filter following the manufacturer's instructions.

Place the filter on the support screen and secure.

7.1.5 Weigh out a representative subsample of the waste (100 gram minimum) and record the weight.

7.1.6 Allow slurries to stand to permit the solid phase to settle. Wastes that settle slowly may be centrifuged prior to filtration. Centrifugation is to be used only as an aid to filtration. If used, the liquid should be decanted and filtered followed by filtration of the solid portion of the waste through the same filtration system.

7.1.7 Quantitatively transfer the waste sample to the filter holder (liquid and solid phases). If filtration of the waste at 4° C reduces the amount of expressed liquid over what would be expressed at room temperature then allow the sample to warm up to room temperature in the device before filtering.

NOTE: If waste material (>1% of original sample weight) has obviously adhered to the container used to transfer the sample to the filtration apparatus, determine the weight of this residue and subtract it from the sample weight determined in Step 7.1.5 to determine the weight of the waste sample that will be filtered.

Gradually apply vacuum or gentle pressure of 1-10 psi, until air or pressurizing gas moves through the filter. If this point is not reached under 10 psi, and if no additional liquid has passed through the filter in any 2-minute interval, slowly increase the pressure in 10-psi increments to a maximum of 50 psi. After each incremental increase of 10-psi, if the pressurizing gas has not moved through the filter, and if no additional liquid has passed through the filter in any 2-minute interval, proceed to the next 10-psi increment. When the pressurizing gas begins to move through the filter, or when liquid flow has ceased at 50 psi (i.e., filtration does not result in any additional filtrate within any 2-minute period), filtration is stopped.

NOTE: Instantaneous application of high pressure can degrade the glass fiber filter and may cause premature plugging.

7.1.8 The material in the filter holder is defined as the solid phase of the waste, and the filtrate is defined as the liquid phase.

NOTE: Some wastes, such as oily wastes and some paint wastes, will obviously contain some material that appears to be a liquid. But even after applying vacuum or pressure filtration, as outlined in Step 7.1.7, this material may not filter. If this is the case, the material within the filtration device is defined as a solid. The original filter is *not* to be replaced with a fresh filter under any circumstances. Only one filter is used.

7.1.9 Determine the weight of the liquid phase by subtracting the weight of the filtrate container (See Step 7.1.3) from the total weight of the filtrate-filled container. The weight of the solid phase of the waste sample is determined by subtracting the weight of the liquid phase from the weight of the total waste sample, as determined in Step 7.1.5 or 7.1.7. Record the weight of the liquid and solid phases. Calculate the percent solids as follows:

$$\text{Percent solids} = \frac{\text{Weight of solid (Step 7.1.9)}}{\text{Total weight of waste (Step 7.1.5 or 7.1.7)}} \times 100$$

7.2 *Determination of whether waste is liquid or has insignificant amounts of solid material:* If the sample obviously has a significant amount of solid material, the solid phase must be subjected to extraction; proceed to Step 7.3 to determine if the waste requires particle-size reduction (and to reduce particle-size, if necessary). Determine whether the waste is liquid or has insignificant amounts of solid material (which need not undergo extraction) as follows:

7.2.1 Remove the solid phase and filter from the filtration apparatus.

7.2.2 Dry the filter and solid phase at 100±20° C until two successive weighings yield the same value within ±1%. Record final weight.

NOTE: Caution should be taken to insure that the subject solid will not flash upon heating. It is recommended that the drying oven be vented to a hood or appropriate device.

7.2.3 Calculate the percent dry solids as follows:

20-142 O—88——24

40 CFR 761.65(b) and must be removed from storage and treated or disposed as required by this part within one year of the date when such wastes are first placed into storage. The provisions of paragraph (c) of this section do not apply to such PCB wastes prohibited under § 268.32 of this part

[51 FR 40642, Nov. 7, 1986; 52 FR 21017, June 4, 1987, as amended at 52 FR 25791, July 8, 1987]

APPENDIX I—TOXICITY CHARACTERISTIC LEACHING PROCEDURE (TCLP)

1.0 SCOPE AND APPLICATION

1.1 The TCLP is designed to determine the mobility of both organic and inorganic contaminants present in liquid, solid, and multiphasic wastes.

1.2 If a total analysis of the waste demonstrates that individual contaminants are not present in the waste, or that they are present but at such low concentrations that the appropriate regulatory thresholds could not possibly be exceeded, the TCLP need not be run.

2.0 SUMMARY OF METHOD

(See Figure 1)

2.1 For liquid wastes (i.e., those containing insignificant solid material), the waste, after filtration through a 0.6- to 0.8-um glass fiber filter, is defined as the TCLP extract.

2.2 For wastes comprised of solids or for wastes containing significant amounts of solid material, the particle-size of the waste is reduced (if necessary), the liquid phase, if any, is separated from the solid phase and stored for later analysis. The solid phase is extracted with an amount of extraction fluid equal to 20 times the weight of the solid phase. The extraction fluid employed is a function of the alkalinity of the solid phase of the waste. A special extractor vessel is used when testing for volatiles (See Table 1). Following extraction, the liquid extract is separated from the solid phase by 0.6- to 0.8-um glass fiber filter filtration.

2.3 If compatible (i.e., multiple phases will not form on combination), the initial liquid phase of the waste is added to the liquid extract, and these liquids are analyzed together. If incompatible, the liquids are analyzed separately and the results are mathematically combined to yield a volume-weighted average concentration.

3.0 INTERFERENCES

3.1. Potential interferences that may be encountered during analysis are discussed in the individual analytical methods.

4.0 APPARATUS AND MATERIALS

4.1 *Agitation apparatus:* An acceptable agitation apparatus is one which is capable of rotating the extraction vessel in an end-over-end fashion (See Figure 2) at 30 ± 2 rpm. Suitable devices known to EPA are identified in Table 2.

4.2 *Extraction Vessel:*

4.2.1 Zero-Headspace Extraction Vessel (ZHE). This device is for use *only* when the waste is being tested for the mobility of volatile constituents (see Table 1). The ZHE is an extraction vessel that allows for liquid/solid separation within the device, and which effectively precludes headspace (as depicted in Figure 3). This type of vessel allows for initial liquid/solid separation, extraction, and final extract filtration without having to open the vessel (see Step 4.3.1). These vessels shall have an internal volume of 500 to 600 mL and be equipped to accommodate a 90-mm filter. Suitable ZHE devices known to EPA are identified in Table 3. These devices contain viton O-rings which should be replaced frequently.

For the ZHE to be acceptable for use, the piston within the ZHE should be able to be moved with approximately 15 psi or less. If it takes more pressure to move the piston, the O-rings in the device should be replaced. If this does not solve the problem, the ZHE is unacceptable for TCLP analyses and the manufacturer should be contacted.

The ZHE should be checked after every extraction. If the device contains a built-in pressure gauge, pressurize the device to 50 psi, allow it to stand unattended for 1 hour, and recheck the pressure. If the device does not have a built-in pressure gauge, pressurize the device to 50 psi, submerge it in water, and check for the presence of air bubbles escaping from any of the fittings. If pressure is lost, check all fittings and inspect and replace O-rings, if necessary. Retest the device. If leakage problems cannot be solved, the manufacturer should be contacted.

4.2.2 When the waste is being evaluated for other than volatile contaminants, an extraction vessel that does not preclude headspace (e.g., a 2-liter bottle) is used. Suitable extraction vessels include bottles made from various materials, depending on the contaminants to be analyzed and the nature of the waste (see Step 4.3.3). It is recommended that borosilicate glass bottles be used over other types of glass, especially when inorganics are of concern. Plastic bottles may be used only if inorganics are to be investigated. Bottles are available from a number of laboratory suppliers. When this type of extraction vessel is used, the filtration device discussed in Step 4.3.2 is used for initial liquid/solid separation and final extract filtration.

4.2.3 Some ZHEs use gas pressure to actuate the ZHE piston, while others use mechanical pressure (see Table 3). Whereas the volatiles procedure (see Section 9.0) refers to pounds-per-square inch (psi), for the mechanically actuated piston, the pressure applied is measured in torque-inch-pounds. Refer to the manufacturer's instructions as to the proper conversion.

4.3 *Filtration Devices:* It is recommended that all filtrations be performed in a hood.

4.3.1 Zero-Headspace Extractor Vessel (see Figure 3): When the waste is being evaluated for volatiles, the zero-headspace extraction vessel is used for filtration. The device shall be capable of supporting and keeping in place the glass fiber filter, and be able to withstand the pressure needed to accomplish separation (50 psi).

NOTE: When it is suspected that the glass fiber filter has been ruptured, an in-line glass fiber filter may be used to filter the material within the ZHE.

4.3.2 Filter Holder: When the waste is being evaluated for other than volatile compounds, a filter holder capable of supporting a glass fiber filter and able to withstand the pressure needed to accomplish separation is used. Suitable filter holders range from simple vacuum units to relatively complex systems capable of exerting pressures of up to 50 psi or more. The type of filter holder used depends on the properties of the material to be filtered (see Step 4.3.3). These devices shall have a minimum internal volume of 300 mL and be equipped to accommodate a minimum filter size of 47 mm (Filter holders having an internal capacity of 1.5 L or greater and equipped to accommodate a 142 mm diameter filter are recommended). Vaccum filtration is only recommended for wastes with low solids content (<10%) and for highly granular (liquid-containing) wastes. All other types of wastes should be filtered using positive pressure filtration. Filter holders known to EPA to be suitable for use are shown in Table 4.

4.3.3 Materials of Construction: Extraction vessels and filtration devices shall be made of inert materials which will not leach or absorb waste components. Glass, polytetrafluoroethylene (PTFE), or type 316 stainless steel equipment may be used when evaluating the mobility of both organic and inorganic components. Devices made of high-density polyethylene (HDPE), polypropylene, or polyvinyl chloride may be used only when evaluating the mobility of metals. Borosilicate glass bottles are recommended for use over other types of glass bottles, especially when inorganics are constituents of concern.

4.4 *Filters:* Filters shall be made of borosilicate glass fiber, shall contain no binder materials, and shall have an effective pore size of 0.6- to 0.8-um, or equivalent. Filters known to EPA to meet these specifications are identified in Table 5. Pre-filters must not be used. When evaluating the mobility of metals, filters shall be acid-washed prior to use by rinsing with 1.0 N nitric acid followed by three consecutive rinses with deionized distilled water (a minimum of 1-L per rinse is recommended). Glass fiber filters are fragile and should be handled with care.

4.5 *pH meters:* Any of the commonly available pH meters are acceptable.

4.6 *ZHE extract collection devices:* TEDLAR® bags or glass, stainless steel or PTFE gas tight syringes are used to collect the initial liquid phase and the final extract of the waste when using the ZHE device. The devices listed are recommended for use under the following conditions.

4.6.1 If a waste contains an aqueous liquid phase or if a waste does not contain a significant amount of non-aqueous liquid (i.e., <1% of total waste), the TEDLAR® bag should be used to collect and combine the initial liquid and solid extract. The syringe is not recommended in these cases.

4.6.2 If a waste contains a significant amount of non-aqueous initial liquid phase (i.e., >1% of total waste), the syringe or the TEDLAR® bag may be used for both the initial solid/liquid separation and the final extract filtration. However, analysts should use one or the other, not both.

4.6.3 If the waste contains no initial liquid phase (is 100% solid) or has no significant solid phase (is 100% liquid), either the TEDLAR® bag or the syringe may be used. If the syringe is used, discard the first 5 mL of liquid expressed from the device. The remaining aliquots are used for analysis.

4.7 *ZHE extraction fluid transfer devices:* Any device capable of transferring the extraction fluid into the ZHE without changing the nature of the extraction fluid is acceptable (e.g., a constant displacement pump, a gas tight syringe, pressure filtration unit (See Step 4.3.2), or another ZHE device).

4.8 *Laboratory balance:* Any laboratory balance accurate to within ±0.01 grams may be used (all weight measurements are to be within ±0.1 grams).

5.0 REAGENTS

5.1 *Reagent water:* Reagent water is defined as water in which an interferent is not observed at or above the method detection limit of the analyte(s) of interest. For non-volatile extractions, ASTM Type II water, or equivalent meets the definition of reagent water. For volatile extractions, it is recommended that reagent water be generated by any of the following methods. Reagent water should be monitored periodically for impurities.

$$\text{Weight of extraction fluid} = \frac{20 \times \text{\% solids (Step 7.1)} \times \text{weight of waste filtered (Step 8.5 or 8.7)}}{100}$$

Slowly add this amount of appropriate extraction fluid (see Step 7.4) to the extractor vessel. Close the extractor bottle tightly (it is recommended that Teflon tape be used to ensure a tight seal), secure in rotary extractor device, and rotate at 30±2 rpm for 18±2 hours. Ambient temperature (i.e., temperature of room in which extraction is to take place) shall be maintained at 22±3 °C during the extraction period.

NOTE: As agitation continues, pressure may build up within the extractor bottle for some types of wastes (e.g., limed or calcium carbonate containing waste may evolve gases such as carbon dioxide). To relieve excess pressure, the extractor bottle may be periodically opened (e.g., after 15 minutes, 30 minutes, and 1 hour) and vented into a hood.

8.12 Following the 18±2 hour extraction, the material in the extractor vessel is separated into its component liquid and solid phases by filtering through a new glass fiber filter, as outlined in Step 8.7. For final filtration of the TCLP extract, the glass fiber filter may be changed, if necessary, to facilitate filtration. Filter(s) shall be acid-washed (see Step 4.4) if evaluating the mobility of metals.

8.13 The TCLP extract is now prepared as follows.

8.13.1 If the waste contained no initial liquid phase, the filtered liquid material obtained from Step 8.12 is defined as the TCLP extract. Proceed to Step 8.14.

8.13.2 If compatible (e.g., multiple phases will not result on combination), the filtered liquid resulting from Step 8.12 is combined with the initial liquid phase of the waste as obtained in Step 8.7. This combined liquid is defined as the TCLP extract. Proceed to Step 8.14.

8.13.3 If the initial liquid phase of the waste, as obtained from Step 8.7, is not or may not be compatible with the filtered liquid resulting from Step 8.12, these liquids are not combined. These liquids, collectively defined as the TCLP extract, are analyzed separately, and the results are combined mathematically. Proceed to Step 8.14.

8.14 Following collection of the TCLP extract, it is recommended that the pH of the extract be recorded. The extract should be immediately aliquoted for analysis and properly preserved (metals aliquots must be acidified with nitric acid to pH <2; all other aliquots must be stored under refrigeration (4 °C) until analyzed). The TCLP extract shall be prepared and analyzed according to appropriate analytical methods. TCLP extracts to be analyzed for metals, other than mercury, shall be acid digested. If the individual phases are to be analyzed separately, determine the volume of the individual phases (to ±0.5%), conduct the appropriate analyses, and combine the results mathematically by using a simple volume-weighted average:

$$\text{Final Analyte Concentration} = \frac{(V_1)(C_1)+(V_2)(C_2)}{V_1+V_2}$$

where:

V_1 = The volume of the first phase (L).

C_1 = The concentration of the contaminant of concern in the first phase (mg/L).

V_2 = The volume of the second phase (L).

C_2 = The concentration of the contaminant of concern in the second phase (mg/L).

8.15 The contaminant concentrations in the TCLP extract are compared with the thresholds identified in the appropriate regulations. Refer to Section 10.0 for quality assurance requirements.

9.0 PROCEDURE WHEN VOLATILES ARE INVOLVED

The ZHE device is used to obtain TCLP extracts for volatile analysis only. Extract resulting from the use of the ZHE shall not be used to evaluate the mobility of non-volatile analytes (e.g., metals, pesticides, etc.).

The ZHE device has approximately a 500-mL internal capacity. Although a minimum sample size of 100 grams was required in the Section 8.0 procedure, the ZHE can only accommodate a *maximum* of 25 grams of solid (defined as that fraction of a sample from which no liquid (additional) may be forced out by an applied pressure of 50 psi), due to the need to add an amount of extraction fluid equal to 20 times the weight of the solid phase.

The ZHE is charged with sample only once and the device is not opened until the final extract (of the solid) has been collected. Repeated filling of the ZHE of obtain 25 grams of solid is not permitted. The initial filtrate should be weighed and then stored at 4 °C until either analyzed or recombined with the final extract of the solid.

Although the following procedure allows for particle-size reduction during the conduct of the procedure, this could result in the loss of volatile compounds. If possible (e.g., particle-size may be reduced easily by crumbling), particle-size reduction (See Step 9.2) should be conducted on the sample as it is being taken. If necessary, particle-size reduction may be conducted during the procedure.

In carrying out the following steps, do not allow the waste, the initial liquid phase, or the extract to be exposed to the atmosphere for any more time than is absolutely necessary. Any manipulation of these materials should be done when cold (4° C) to minimize loss of volatiles.

9.1 Pre-weigh the (evacuated) container which will receive the filtrate (See Step 4.6), and set aside. If using a TEDLAR® bag, all liquid must be expressed from the device, whether it be for the initial or final liquid/solid separation, and an aliquot taken from the liquid in the bag, for analysis. The containers listed in Step 4.6 are recommended for use under the following conditions.

9.1.1 If a waste contains an aqueous liquid phase or if the waste does not contain a significant amount of non-aqueous liquid (i.e., <1% of total waste), the TEDLAR® bag should be used to collect and combine the initial liquid and solid extract. The syringe is not recommended in these cases.

9.1.2 If a waste contains a significant amount of non-aqueous initial liquid phase (i.e., >1% of total waste), the syringe or the TEDLAR® bag may be used for both the initial solid/liquid separation and the final extract filtration. However, analysts should use one or the other, not both.

9.1.3 If the waste contains no initial liquid phase (is 100% solid) or has no significant solid phase (is 100% liquid), either the TEDLAR® bag or the syringe may be used. If the syringe is used, discard the first 5 mL liquid expressed from the device. The remaining aliquots are used for analysis.

9.2 Place the ZHE piston within the body of the ZHE (it may be helpful first to moisten the piston O-rings slightly with extraction fluid). Adjust the piston within the ZHE body to a height that will minimize the distance the piston will have to move once the ZHE is charged with sample (based upon sample size requirements determined from Section 9.0, Step 7.1 and/or 7.2). Secure the gas inlet/outlet flange (bottom flange) onto the ZHE body in accordance with the manufacturer's instructions. Secure the glass fiber filter between the support screens and set aside. Set liquid inlet/outlet flange (top flange) aside.

9.3 If the waste is 100% solid (see Step 7.1), weigh out a representative subsample (25 gram maximum) of the waste, record weight, and proceed to Step 9.5.

9.4 If the waste was shown to contain <0.5% dry solids (Step 7.2), the waste, after filtration is defined as the TCLP extract. Enough of the sample should be filtered so that the amount of filtered liquid will support all of the volatile analyses required. For wastes containing >0.5% dry solids (Steps 7.1 and/or 7.2), use the percent solids information obtained in Step 7.1 to determine the optimum sample size to charge into the ZHE. The appropriate sample size recommended is as follows:

9.4.1 For wastes containing >5% solids (see Step 7.1), weigh out a representative 500 gram sample or waste and record the weight.

9.4.2 For wastes containing >5% solids (see Step 7.1), the amount of waste to charge into the ZHE is determined as follows:

$$\text{Weight of waste to charge ZHE} = \frac{25}{\text{\% solids (Step 7.1)}} \times 100$$

Weigh out a representative subsample of the waste of the appropriate size and record the weight.

9.5 If particle-size reduction of the solid portion of the waste was required in Step 7.3, proceed to Step 9.6. If particle-size reduction was not required in Step 7.3, proceed to Step 9.7.

9.6 The waste is prepared for extraction by crushing, cutting, or grinding the solid portion of the waste to a surface area or particle-size as described in Step 7.3. Wastes and appropriate reduction equipment should be refrigerated, if possible, to 4 °C prior to particle-size reduction. The means used to effect particle-size reduction must not generate heat in and of itself. If reduction of the solid phase of the waste is necessary, exposure of the waste to the atmosphere should be avoided to the extent possible.

NOTE: Sieving of the waste is not recommended due to the possibility that volatiles may be lost. The use of an appropriately graduated ruler is recommended as an acceptable alternative. Surface area requirements are meant for filamentous (e.g., paper, cloth) and similar waste materials.

$$\text{Percent dry solids} = \frac{\text{Weight of dry waste and filter} - \text{tared weight of filter}}{\text{Initial weight of waste (Step 7.1.5 or 7.1.1)}} \times 100$$

7.2.4 If the percent dry solids is less than 0.5%, consult Step 6.2 and proceed to Section 8.0 if non-volatiles in the waste are of concern, and to Section 9.0 if volatiles are of interest. In this case, the waste, after filtration is defined as the TCLP extract. If the percent dry solids is greater than or equal to 0.5%, and if the non-volatile TCLP is to be performed, return to the beginning of this Section (7.0) with a new representative waste sample, so that it can be determined if particle-size reduction is necessary (Step 7.3), and so that the appropriate extraction fluid may be determined (Step 7.4) on a fresh portion of the solid phase of the waste. If only the volatile TCLP is to be performed, see the Note in Step 7.4.

7.3 *Determination of whether the wastes requires particle-size reduction (particle-size is reduced during this Step):* Using the solid portion of the waste, evaluate the solid for particle-size. If the solid has a surface area per gram of material equal to or greater than 3.1 cm^2, or is smaller than 1 cm in its narrowest dimension (e.g., is capable of passing through a 9.5-mm (0.375-inch) standard sieve), particle-size reduction is not required (proceed to Step 7.4). If the surface area is smaller or the particle-size larger than described above, the solid portion of the waste is prepared for extraction by crushing, cutting, or grinding the waste to a surface area or particle-size as described above.

NOTE: Surface area requirements are meant for filamentous (e.g., paper, cloth) and similar waste materials. Actual measurement of surface area is not required; nor is it recommended.

7.4 *Determination of appropriate extraction fluid:* If the solid content is greater than or equal to 0.5% of the waste and if TCLP extraction for non-volatile constituents will take place (Section 8.0), determination of the appropriate fluid (Step 5.6) to use for the non-volatiles extraction is performed as follows.

NOTE: TCLP extraction for volatile constituents entails using only extraction fluid #1 (Step 5.6.1). Therefore, if TCLP extraction for non-volatiles extraction is not required, proceed to section 9.0.

7.4.1 Weigh out a small subsample of the solid phase of the waste, reduce the solid (if necessary) to a particle-size of approximately 1mm in diameter or less, and transfer 5.0 grams of the solid phase of the waste to a 500-mL beaker or Erlenmeyer flask.

7.4.2 Add 96.5 mL of reagent water (ASTM Type II) to the beaker, cover with a watchglass, and stir vigorously for 5 minutes using a magnetic stirrer. Measure and record the pH. If the pH is <5.0, extraction fluid #1 is used. Proceed to Section 8.0.

7.4.3 If the pH from Step 7.4.2 is >5.0, add 3.5 mL 1.0 N HCl, slurry briefly, cover with a watchglass, heat to 50 °C, and hold at 50 °C for 10 minutes.

7.4.4 Let the solution cool to room temperature and record the pH. If the pH is <5.0, use extraction fluid #1. If the pH is >5.0, use extraction fluid #2. Proceed to Section 8.0.

7.5 The sample of waste used for performance of this Section shall *not* be used any further. Other samples of the waste (see Step 6.2) should be employed for the Section 8.0 and 9.0 extractions.

8.0 PROCEDURE WHEN VOLATILES ARE NOT INVOLVED

Although a minimum sample size of 100 grams (solid and liquid phases) is required, a larger sample size may be more appropriate, depending on the solids content of the waste sample (percent solids, see Step 7.1), whether the initial liquid phase of the waste will be miscible with the aqueous extract of the solid, and whether inorganics, semivolatile organics, pesticides, and herbicides are all analytes of concern. Enough solids should be generated for extraction such that the volume of TCLP extract will be sufficient to support all of the analyses required. If the amount of extract generated by the performance of a single TCLP extraction will not be sufficient to perform all of the analyses to be conducted, it is recommended that more than one extraction be performed and that the extracts from each extraction be combined and then aliquoted for analysis.

8.1 If the waste will obviously yield no liquid when subjected to pressure filtration (i.e., is 100% solid, see Step 7.1), weigh out a representative subsample of the waste (100 gram minimum) and proceed to Step 8.9.

8.2 If the sample is liquid or multiphasic, liquid/solid separation is required. This involves the filtration device described in Step 4.3.2 and is outlined in Steps 8.3 to 8.8.

8.3 Pre-weigh the container that will receive the filtrate.

8.4 Assemble the filter holder and filter following the manufacturer's instructions. Place the filter on the support screen and secure. Acid wash the filter if evaluating the mobility of metals (See Step 4.4).

NOTE: Acid washed filters may be used for all non-volatile extractions even when metals are not of concern.

8.5 Weigh out a representative subsample of the waste (100 gram minimum) and record the weight. If the waste was shown to contain <0.5% dry solids (Step 7.2), the waste, after filtration is defined as the TCLP extract. Therefore, enough of the sample should be filtered so that the amount of filtered liquid will support all of the analyses required of the TCLP extract. For wastes containing >0.5% dry solids (Steps 7.1 or 7.2), use the percent solids information obtained in Step 7.1 to determine the optimum sample size (100 gram minimum) for filtration. Enough solids should be generated after filtration to support the analyses to be performed on the TCLP extract.

8.6 Allow slurries to stand to permit the solid phase to settle. Wastes that settle slowly may be centrifuged prior to filtration. Centrifugation is to be used only as an aid to filtration. If used, the liquid should be decanted and filtered followed by filtration of the solid portion of the waste through the same filtration system.

8.7 Quantitatively transfer the waste sample (liquid and solid phases) to the filter holder (see Step 4.3.2). If filtration of the waste at 4° C reduces the amount of expressed liquid over what would be expressed at room temperature, then allow the sample to warm up to room temperature in the device before filtering.

NOTE: If waste material (>1% of the original sample weight) has obviously adhered to the container used to transfer the sample to the filtration apparatus, determine the weight of this residue and subtract it from the sample weight determined in Step 8.5, to determine the weight of the waste sample that will be filtered.

Gradually apply vacuum or gentle pressure of 1-10 psi, until air or pressurizing gas moves through the filter. If this point is not reached under 10 psi, and if no additional liquid has passed through the filter in any 2-minute interval, slowly increase the pressure in 10-psi increments to maximum of 50 psi. After each incremental increase of 10 psi, if the pressurizing gas has not moved through the filter, and if no additional liquid has passed through the filter in any 2-minute interval, proceed to the next 10-psi increment. When the pressurizing gas begins to move through the filter, or when the liquid flow has ceased at 50 psi (i.e., filtration does not result in any additional filtrate within a 2-minute period), filtration is stopped.

NOTE: Instantaneous application of high pressure can degrade the glass fiber filter and may cause premature plugging.

8.8 The material in the filter holder is defined as the solid phase of the waste, and the filtrate is defined as the liquid phase. Weigh the filtrate. The liquid phase may now be either analyzed (see Step 8.13) or stored at 4 °C until time of analysis.

NOTE: Some wastes, such as oily wastes and some paint wastes, will obviously contain some material that appears to be a liquid. But even after applying vacuum or pressure filtration, as outlined in Step 8.7, this material may not filter. If this is the case, the material within the filtration device is defined as a solid and is carried through the extraction as a solid. The original filter is *not* to be replaced with a fresh filter under any circumstances. Only one the filter is used.

8.9 If the waste contains <0.5% dry solids (see Step 7.2), proceed to Step 8.13. If the waste contains >0.5% dry solids (see Step 7.1 or 7.2), and if particle-size reduction of the solid was needed in Step 7.3, proceed to Step 8.10. If particle-size reduction was not required in Step 7.3, quantitatively transfer the solid material into the extractor vessel, including the filter used to separate the initial liquid from the solid phase. Proceed to Step 8.11.

8.10 The solid portion of the waste is prepared for extraction by crushing, cutting, or grinding the waste to a surface area of particle-size as described in Step 7.3. When the surface area of particle-size has been appropriately altered, quantitatively transfer the solid material into the extractor vessel, including the filter used to separate the initial liquid from the solid phase.

NOTE: Sieving of the waste through a sieve that is not Teflon coated should not be done due to avoid possible contamination of the sample. Surface area requirements are meant for filamentous (e.g., paper, cloth) and similar waste materials. Actual measurement of surface area is not recommended.

8.11 Determine the amount of extraction fluid to add to the extractor vessel as follows:

propriate regulatory threshold. If more than one extraction is being run on samples of the same waste (up to twently samples), the method of standard addition need be applied only once and the percent recoveries applied to the remainder of the extractions.

10.6 Samples must undergo TCLP extraction within the following time period after sample receipt: Volatiles, 14 days; Semi-Volatiles, 40 days; Mercury, 28 days; and other Metals, 180 days. Extraction of the solid portion of the waste should be initiated as soon as possible following initial solid/liquid separation. TCLP extracts shall be analyzed after generation and preservation within the following periods: Volatiles, 14 days; Semi-Volatiles, 40 days; Mercury, 28 days; and other Metals, 180 days.

TABLE 1—VOLATILE CONTAMINANTS [1]

Compound	CAS No.
Acetone	67-64-1
n-Butyl alcohol	71-36-6
Carbon disulfide	75-15-0
Carbon tetrachloride	56-23-5
Chlorobenzene	108-90-7
Methylene chloride	75-09-2
Methyl ethyl ketone	78-93-3
Methyl isobutyl ketone	108-10-1
Tetrachloroethylene	127-18-4
Toluene	108-88-3
1,1,1-Trichloroethane	71-55-6
Trichloroethylene	79-01-6
Trichlorofluoromethane	75-69-4

TABLE 1—VOLATILE CONTAMINANTS [1]—Continued

Compound	CAS No.
Xylene	1330-20-7

[1] Includes compounds identified in the Land Disposal Restrictions Rule. If any or all of these compounds are of concern, the zero-headspace extractor vessel shall be used. If other (non-volatile) compounds are of concern, the conventional bottle extractor shall be used.

TABLE 2—SUITABLE ROTARY AGITATION APPARATUS [1]

Company	Location	Model
Associated Design and Manufacturing Company.	Alexandria, VA (703) 549-5999.	4-vessel device, 6-vessel device
Lars Lande Manfacturing.	Whitmore Lake, MI (313) 449-4116.	10-vessel device, 5-vessel device
IRA Machine Shop and Laboratory.	Santurce, PR (809) 752-4004.	16-vessel device
EPRI Extractor		6-vessel device [2]
REXNORD	Milwaukee, WI (414) 643-2850.	6-vessel device
Analytical Testing and Consulting Services, Inc.	Warrington, PA (215) 343-4490.	4-vessel device

[1] Any device that rotates the extraction vessel in an end-over-end fashion at 30±2 rpm is acceptable.

[2] Although this device is suitable, it is not commercially made. It may also require retrofitting to accommodate ZHE devices.

TABLE 3—SUITABLE ZERO-HEADSPACE EXTRACTOR VESSELS

Company	Location	Model No.
Associated Design & Manufacturing Co..	Alexandria, VA, (703) 549-5999	3740-ZHB, Gas Pressure Device.
Millipore Corp.	Bedford, MA, (800) 225-3384	SD1 P581 C5, Gas Pressure Device.
Analytical Testing & Consulting Services, Inc..	Warrington, PA, (215) 343-4490	CI02, Mechanical Pressure Device.

TABLE 4—SUITABLE FILTER HOLDERS [1]

Company	Location	Model	Size
Nuclepore Corp.	Pleasanton, CA, (800) 882-7711	425910	142 mm.
		410400	47 mm.
Micro Filtration Systems	Dublin, CA, (415) 828-6010	302400	142 mm.
Millipore Corp	Bedford, MA, (800) 225-3384	YT30142HW	142 mm.
		XX1004700	47 mm.

[1] Any device capable of separating the liquid from the solid phase of the waste is suitable, providing that it is chemically compatible with the waste and the constituents to be analyzed. Plastic devices (not listed above) may be used when only inorganic contaminants are of concern. The 142 mm size filter holder is recommended.

TABLE 5—SUITABLE FILTER MEDIA

Company	Location	Model	Pore size[1]
Whatman Laboratory Products, Inc.	Clifton, NJ, (201) 773-5800	GFF	0.7

[1] Nominal pore size.

Actual measurement of surface area is not recommended.

When the surface area or particle-size has been appropriately altered, proceed to Step 9.7.

9.7 Waste slurries need not be allowed to stand to permit the solid phase to settle. Wastes that settle slowly shall not be centrifuged prior to filtration.

9.8 Quantitatively transfer the entire sample (liquid and solid phases) quickly to the ZHE. Secure the filter and support screens into the top flange of the device and secure the top flange to the ZHE body in accordance with the manufacturer's instructions. Tighten all ZHE fittings and place the device in the vertical position (gas inlet/outlet flange on the bottom). *Do not* attach the extraction collection device to the top plate.

NOTE: If waste material (>1% of original sample weight) has obviously adhered to the container used to transfer the sample to the ZHE, determine the weight of this residue and subtract it from the sample weight determined in Step 9.4, to determine the weight of the waste sample that will be filtered.

Attach a gas line to the gas inlet/outlet valve (bottom flange) and, with the liquid inlet/outlet valve (top flange) open, begin applying gentle pressure of 1-10 psi (or more if necessary) to force all headspace (into a hood) slowly out of the ZHE device. At the first appearance of liquid from the liquid inlet/outlet valve, quickly close the valve and discontinue pressure. If filtration of the waste at 4°C reduces the amount of expressed liquid over what would be expressed at room temperature, then allow the sample to warm up to room temperature in the device before filtering. If the waste is 100% solid (see Step 7.1), slowly increase the pressure to a maximum of 50 psi to force most of the headspace out of the device and proceed to Step 9.12.

9.9 Attach the evacuated pre-weighed filtrate collection container to the liquid inlet/outlet valve and open the valve. Begin applying gentle pressure of 1-10 psi to force the liquid phase into the filtrate collection container. If no additional liquid has passed through the filter in any 2-minute interval, slowly increase the pressure in 10-psi increments to a maximum of 50 psi. After each incremental increase of 10 psi, if no additional liquid has passed through the filter in any 2-minute interval, proceed to the next 10-psi increment. When liquid flow has ceased such that continued pressure filtration at 50 psi does not result in any additional filtrate within any 2-minute period, filtration is stopped. Close the liquid inlet/outlet valve, discontinue pressure to the piston, and disconnect the filtrate collection container.

NOTE: Instantaneous application of high pressure can degrade the glass fiber filter and may cause premature plugging.

9.10 The material in the ZHE is defined as the solid phase of the waste and the filtrate is defined as the liquid phase.

NOTE: Some wastes, such as oily wastes and some paint wastes, will obviously contain some material that appears to be a liquid. But even after applying pressure filtration, this material will not filter. If this is the case, the material within the filtration device is defined as a solid and is carried through the TCLP extraction as a solid.

If the original waste contained <0.5% dry solids (see Step 7.2), this filtrate is defined as the TCLP extract and is analyzed directly. Proceed to Step 9.15.

9.11 The liquid phase may now be either analyzed immediately (see Steps 9.13 through 9.15) or stored at 4 °C under minimal headspace conditions until time of analysis. The weight of extraction fluid #1 to add to the ZHE is determined as follows:

$$\text{Weight of extraction fluid} = \frac{20 \times \%\ \text{solids (Step 7.1)} \times \text{weight of waste filtered (Step 9.4 or 9.8)}}{100}$$

9.12 The following steps detail how to add the appropriate amount of extraction fluid to the solid material within the ZHE and agitation of the ZHE vessel. Extraction fluid #1 is used in all cases (see Step 5.6).

9.12.1 With the ZHE in the vertical position, attach a line from the extraction fluid reservior to the liquid inlet/outlet valve. The line used shall contain fresh extraction fluid and should be preflushed with fluid to eliminate any air pockets in the line. Release gas pressure on the ZHE piston (from the gas inlet/outlet valve), open the liquid inlet/outlet valve, and begin transferring extraction fluid (by pumping or similar means) into the ZHE. Continue pumping extraction fluid into the ZHE until the appropriate amount of fluid has been introduced into the device.

9.12.2 After the extraction fluid has been added, immediately close the liquid inlet/outlet valve and disconnect the extraction fluid line. Check the ZHE to ensure that all valves are in their closed positions. Physically rotate the device in an end-over-end fashion 2 or 3 times. Reposition the ZHE in the vertical position with the liquid inlet/outlet valve on top. Put 5-10 psi behind the piston (if necessary) and slowly open the liquid inlet/outlet valve to bleed out any headspace (into a hood) that may have been introduced due to the addition of extraction fluid. This bleeding shall be done quickly and shall be stopped at the first appearance of liquid from the valve. Re-pressurize the ZHE with 5-10 psi and check all ZHE fittings to ensure that they are closed.

9.12.3 Place the ZHE in the rotary extractor apparatus (if it is not already there) and rotate the ZHE at 30±2 rpm for 18±2 hours. Ambient temperature (i.e., temperature of room in which extraction is to occur) shall be maintained at 22±3 °C during agitation.

9.13 Following the 18±2 hour agitation period, check the pressure behind the ZHE piston by quickly opening and closing the gas inlet/outlet valve and noting the escape of gas. If the pressure has not been maintained (i.e., no gas release observed), the device is leaking. Check the ZHE for leaking as specified in Step 4.2.1, and redo the extraction with a new sample of waste. If the pressure within the device has been maintained, the material in the extractor vessel is once again separated into its component liquid and solid phases. If the waste contained an initial liquid phase, the liquid may be filtered directly into the same filtrate collection container (i.e., TEDLAR® bag) holding the initial liquid phase of the waste, unless doing so would create multiple phases, or unless there is not enough volume left within the filtrate collection container. A separate filtrate collection container must be used in these cases. Filter through the glass fiber filter, using the ZHE device as discussed in Step 9.9. All extract shall be filtered and collected in the TEDLAR® bag is used, if the extract is multiphasic, or if the waste contained an initial liquid phase (see Steps 4.6 and 9.1).

NOTE: An in-line glass fiber filter may be used to filter the material within the ZHE when it is suspected that the glass fiber filter has been ruptured.

9.14 If the original waste contained no initial liquid phase, the filtered liquid material obtained from Step 9.13 is defined as the TCLP extract. If the waste contained in initial liquid phase, the filtered liquid material obtained from Step 9.13 and the initial liquid phase (Step 9.9) are collectively defined as the TCLP extract.

9.15 Following collection of the TCLP extract, the extract should be immediately aliquoted for analysis and stored with minimal headspace at 4 °C until analyzed. The TCLP extract will be prepared and analyzed according to the appropriate analytical methods. If the individual phases are to be analyzed separately (i.e., are not miscible), determine the volume of the individual phases (to ±0.5%), conduct the appropriate analyses, and combine the results mathematically by using a simple volume-weighted average:

$$\text{Final Analyte Concentration} = \frac{(V_1)(C_1)+(V_2)(C_2)}{V_1+V_2}$$

where:

V_1=The volume of the first phases (L).

C_1=The concentration of the contaminant of concern in the first phase (mg/L).

V_2=The volume of the second phase (L).

C_2=The concentration of the contaminant of concern in the second phase (mg/L).

9.16 The contaminant concentrations in the TCLP extract are compared with the thresholds identified in the appropriate regulations. Refer to Section 10.0 for qualify assurance requirements.

10.0 QUALITY ASSURANCE REQUIREMENTS

10.1 All data, including quality assurance data, should be maintained and available for reference or inspection.

10.2 A minimum of one blank (extraction fluid #1) for every 10 extractions that have been conducted in an extraction vessel shall be employed as a check to determine if any memory effects from the extraction equipment are occurring.

10.3 For each analytical batch (up to twenty samples), it is recommended that a matrix spike be performed. Addition of matrix spikes should occur once the TCLP extract has been generated (i.e., should not occur prior to performance of the TCLP procedure). The purpose of the matrix spike is to monitor the adequacy of the analytical methods used on the TCLP extract and for determining if matrix interferences exist in analyte detection.

10.4 All quality control measures described in the appropriate analytical methods shall be followed.

10.5 The method of standard addition shall be employed for each analyte if: 1) recovery of the compound from the TCLP extract is not between 50 and 150%, or 2) if the concentration of the constituent measured in the extract is within 20% of the ap-

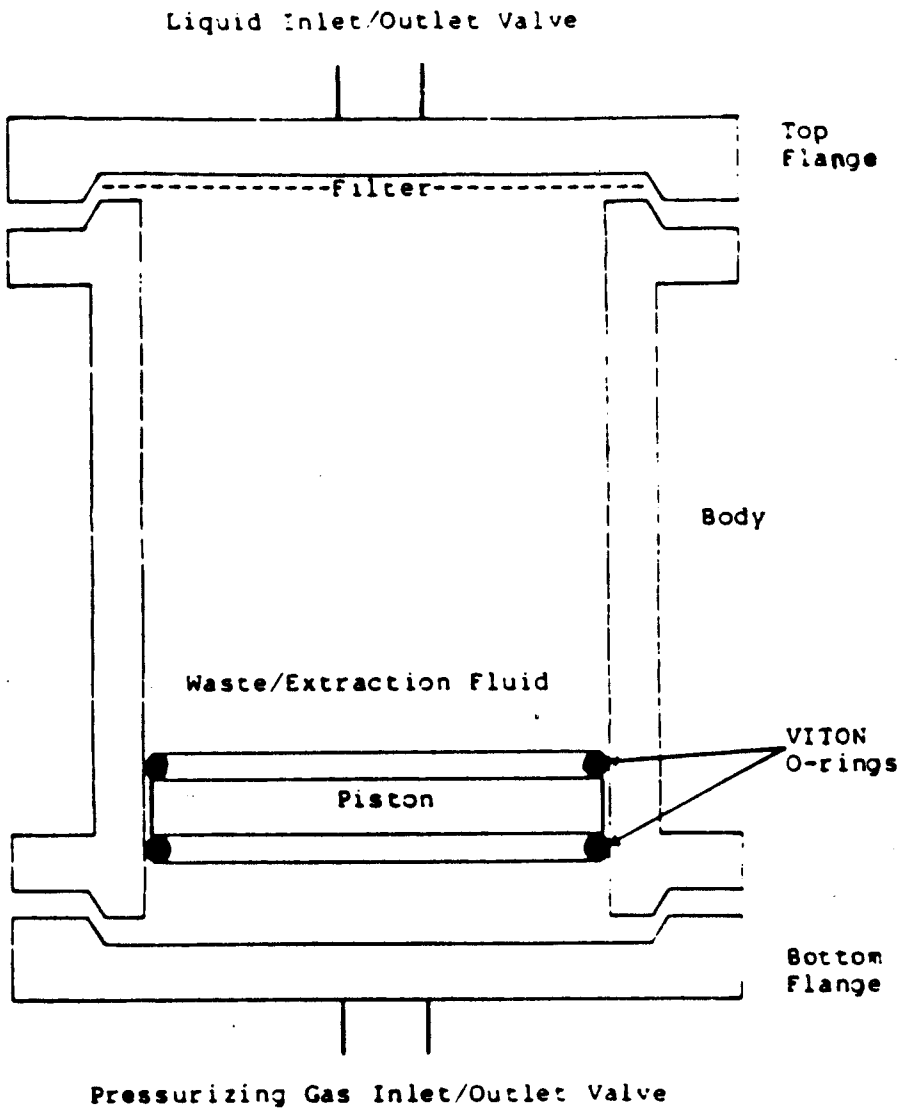

Figure 3: Zero-Headspace Extraction Vessel

[51 FR 40643, Nov. 7, 1986; 52 FR 21018, June 4, 1987]

APPENDIX II—TREATMENT STANDARDS (AS CONCENTRATIONS IN THE TREATMENT RESIDUAL EXTRACT)

[Note: The technologies shown are the basis of the treatment standards. They are not required to be used in meeting the treatment standards]

Constitutents of FOO1-FOO5 Spent Solvent Wastes	Waste Treatability Groups For FOO1-FOO5 Spent Solvent Wastes (mg/l)			
	Wastewater	Technology Basis [1]	Wastewater Generated by Pharmaceutical Plant [2]	All Other [3]
Acetone	0.05	SS		0.59
n-Butyl Alcohol	5.00	SS		5.00
Carbon disulfide	1.05	SS		4.81
Carbon tetrachloride	0.05	B		0.96
Chlorobenzene	0.15	B&AC		0.05
Cresols (cresylic acid)	2.82	AC		0.75
Cyclohexanone	0.125	SS		0.75
1,2-Dichlorobenzene	0.65	B&AC		0.125
Ethyl acetate	0.05	SS		0.75
Ethylbenzene	0.05	B		0.053
Ethyl ether	0.05	SS		0.75
Isobutanol	5.00	SS		5.00
Methanol	0.25	SS		0.75
Methylene chloride	0.20	B	12.7	0.96
Methyl ethyl ketone	0.05	SS		0.75
Methyl isobutyl ketone	0.05	SS		0.33
Nitrobenzene	0.66	SS&AC		0.125
Pyridine	1.12	B&AC		0.33
Tetrachloroethylene	0.079	B		0.05
Toluene	1.12	B&AC		0.33
1,1,1-Trichloroethane	1.05	SS		0.41
1,1,2-Trichloro-1,2,2-trifluoroethane	1.05	SS		0.96
Trichloroethylene	0.062	B&AC		0.091
Trichlorofluoromethane	0.05	B		0.96
Xylene	0.05	AC		0.15

[1] In some instances other technologies achieved somewhat lower treatment values but waste characterization data were insufficient to identify separate treatability groups. Refer to the BDAT background document for a detailed explanation of the determination of the treatment standards.
SS = steam stripping
B = biological treatment
AC = activated carbon
[2] Wastewaters generated by pharmaceutical plants must be treated to the standards given for all other wastewaters except in the case of methylene chloride.
[3] The treatment standards in this treatability group are based on incineration.

[51 FR 40653, Nov. 7, 1986]

APPENDIX III—LIST OF HALOGENATED ORGANIC COMPOUNDS REGULATED UNDER § 268.32

In determining the concentration of HOCs in a hazardous waste for purposes of the § 268.32 land disposal prohibition, EPA has defined the HOCs that must be included in the calculation as any compounds having a carbon-halogen bond which are listed in this Appendix (see § 268.2). Appendix III to Part 268 consists of the following compounds:

Volatiles

Bromodichloromethane
Bromomethane
Carbon Tetrachloride
Chlorobenzene
2-Chloro-1,3-butadiene
Chlorodibromomethane
Chloroethane
2-Chloroethyl vinyl ether
Chloroform
Chloromethane
3-Chloropropene
1,2-Dibromo-3-chloropropane
1,2-Dibromomethane
Dibromomethane
Trans-1,4-Dichloro-2-butene
Dichlorodifluoromethane
1,1-Dichloroethane
1,2-Dichloroethane
1,1-Dichloroethylene
Trans-1,2-Dichloroethene
1,2-Dichloropropane
Trans-1,3-Dichloropropene
cis-1,3-Dichloropropene
Iodomethane
Methylene chloride
1,1,1,2-Tetrachloroethane
1,1,2,2-Tetrachloroethane
Tetrachloroethene

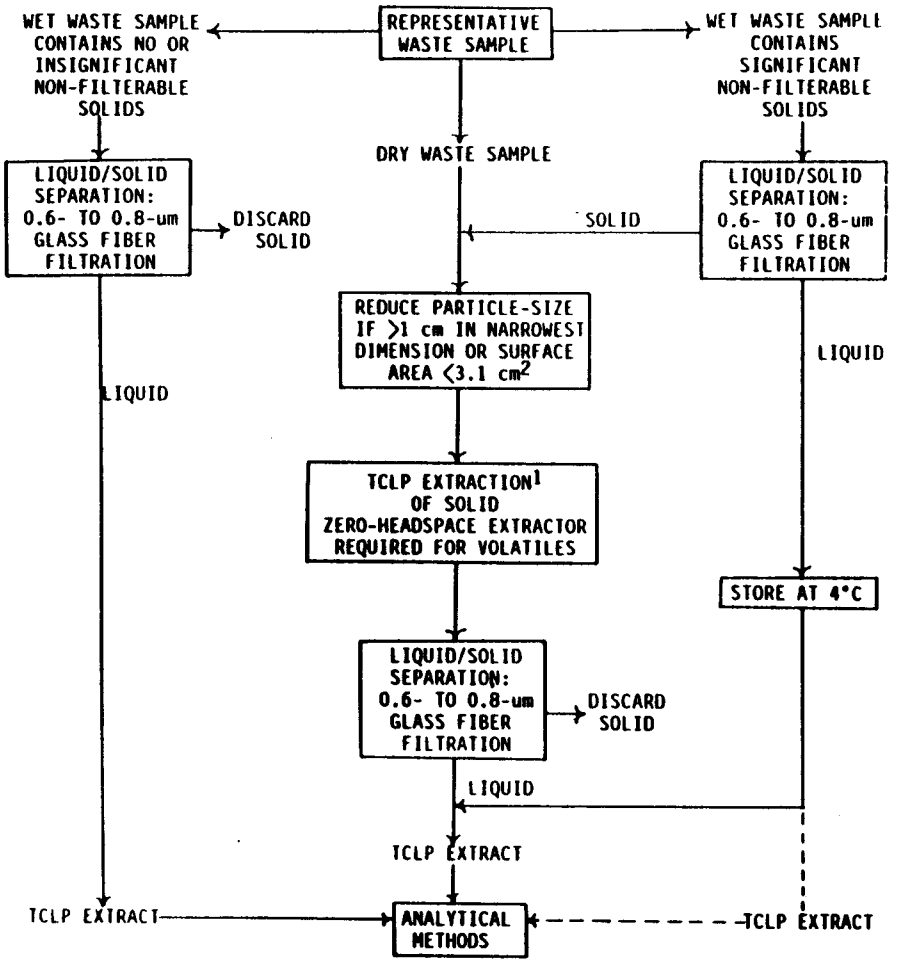

[1]The extraction fluid employed is a function of the alkalinity of the solid phase of the waste.

FIGURE 1: TCLP FLOWCHART

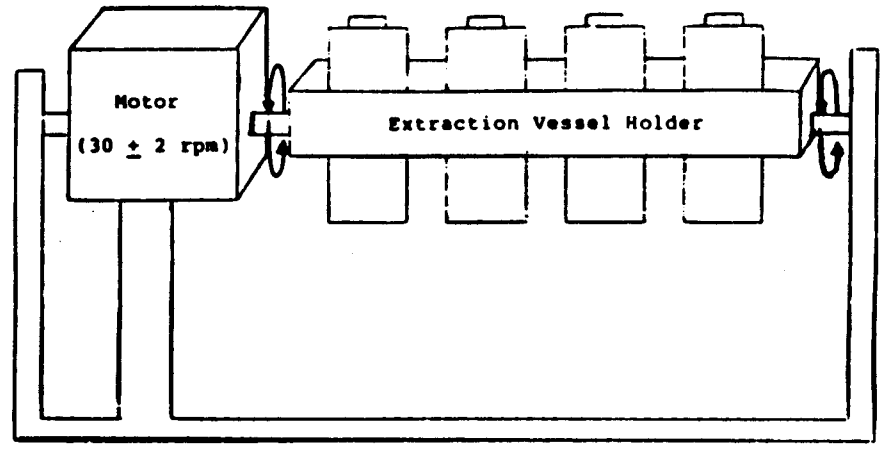

Figure 2: Rotary Agitation

Part B (see § 270.14 and applicable sections in §§ 270.15 through 270.29). For "existing HWM facilities," the requirement to submit an application is satisfied by submitting only Part A of the permit application until the date the Director sets for submitting Part B of the application. (Part A consists of Forms 1 and 3 of the Consolidated Permit Application Forms.) Timely submission of both notification under section 3010 and Part A qualifies owners and operators of existing HWM facilities (who are required to have a permit) for interim status under section 3005(e) of RCRA. Facility owners and operators with interim status are treated as having been issued a permit until EPA or a State with interim authorization for Phase II or final authorization under Part 271 makes a final determination on the permit application. Facility owners and operators with interim status must comply with interim status standards set forth at 40 CFR Part 265 or with the analagous provisions of a State program which has received interim or final authorization under Part 271. Facility owners and operators with interim status are not relieved from complying with other State requirements. For existing HWM facilities, the Director shall set a date, giving at least six months notice, for submission of Part B of the application. There is no form for Part B of the application; rather, Part B must be submitted in narrative form and contain the information set forth in the applicable sections of §§ 270.14 through 270.29. Owners or operators of new HWM facilities must submit Parts A and B of the permit application at least 180 days before physical construction is expected to commence.

(c) *Scope of the RCRA permit requirement.* RCRA requires a permit for the "treatment," "storage," and "disposal" of any "hazardous waste" as identified or listed in 40 CFR Part 261. The terms "treatment," "storage," "disposal," and "hazardous waste" are defined in § 270.2. Owners and operators of hazardous waste management units must have permits during the active life (including the closure period) of the unit. Owners or operators of surface impoundments, landfills, land treatment units, and waste pile units that received wastes after July 26, 1982, or that certified closure (according to § 265.115) after January 26, 1983, must have post-closure permits, unless they demonstrate closure by removal as provided under § 270.1(c) (5) and (6). If a post-closure permit is required, the permit must address applicable Part 264 Groundwater Monitoring, Unsaturated Zone Monitoring, Corrective Action, and Post-closure Care Requirements of this chapter.

(1) *Specific inclusions.* Owners and operators of certain facilities require RCRA permits as well as permits under other programs for certain aspects of the facility operation. RCRA permits are required for:

(i) Injection wells that dispose of hazardous waste, and associated surface facilities that treat, store or dispose of hazardous waste, (See § 270.64). However, the owner and operator with a UIC permit in a State with an approved or promulgated UIC program, will be deemed to have a RCRA permit for the injection well itself if they comply with the requirements of § 270.60(b) (permit-by-rule for injection wells).

(ii) Treatment, storage, or disposal of hazardous waste at facilities requiring an NPDES permit. However, the owner and operator of a publicly owned treatment works receiving hazardous waste will be deemed to have a RCRA permit for that waste if they comply with the requirements of § 270.60(c) (permit-by-rule for POTWs).

(iii) Barges or vessels that dispose of hazardous waste by ocean disposal and onshore hazardous waste treatment or storage facilities associated with an ocean disposal operation. However, the owner and operator will be deemed to have a RCRA permit for ocean disposal from the barge or vessel itself it they comply with the requirements of § 270.60(a) (permit-by-rule for ocean disposal barges and vessels).

(2) *Specific exclusions.* The following persons are among those who are not required to obtain a RCRA permit:

(i) Generators who accumulate hazardous waste on-site for less than the time periods provided in 40 CFR 262.34.

(ii) Farmers who dispose of hazardous waste pesticides from their own use as provided in 40 CFR 262.51.

(iii) Persons who own or operate facilities solely for the treatment, storage or disposal of hazardous waste excluded from regulations under this part by 40 CFR 261.4 or 261.5 (small generator exemption).

(iv) Owners or operators of totally enclosed treatment facilities as defined in 40 CFR 260.10.

(v) Owners and operators of elementary neutralization units or wastewater treatment units as defined in 40 CFR 260.10.

(vi) Transporters storing manifested shipments of hazardous waste in containers meeting the requirements of 40 CFR 262.30 at a transfer facility for a period of ten days or less.

(vii) Persons adding absorbent material to waste in a container (as defined in § 260.10 of this chapter) and persons adding waste to absorbent material in a container, provided that these actions occur at the time waste is first placed in the container; and §§ 264.17(b), 264.171, and 264.172 of this chapter are complied with.

(3) *Further exclusions.* (i) A person is not required to obtain an RCRA permit for treatment or containment activities taken during immediate response to any of the following situations:

(A) A discharge of a hazardous waste;

(B) An imminent and substantial threat of a discharge of hazardous waste;

(C) A discharge of a material which, when discharged, becomes a hazardous waste.

(ii) Any person who continues or initiates hazardous waste treatment or containment activities after the immediate response is over is subject to all applicable requirements of this part for those activities.

(4) *Permits for less than an entire facility.* EPA may issue or deny a permit for one or more units at a facility without simultaneously issuing or denying a permit to all of the units at the facility. The interim status of any unit for which a permit has not been issued or denied is not affected by the issuance or denial of a permit to any other unit at the facility.

(5) *Closure by removal.* Owners/operators of surface impoundments, land treatment units, and waste piles closing by removal or decontamination under Part 265 standards must obtain a post-closure permit unless they can demonstrate to the Regional Administrator that the closure met the standards for closure by removal or decontamination in § 264.228, § 264.280(e), or § 264.258, respectively. The demonstration may be made in the following ways:

(i) If the owner/operator has submitted a Part B application for a post-closure permit, the owner/operator may request a determination, based on information contained in the application, that section 264 closure by removal standards were met. If the Regional Administrator believes that § 264 standards were met, he/she will notify the public of this proposed decision, allow for public comment, and reach a final determination according to the procedures in paragraph (c)(6) of this section.

(ii) If the owner/operator has not submitted a Part B application for a post-closure permit, the owner/operator may petition the Regional Administrator for a determination that a post-closure permit is not required because the closure met the applicable Part 264 closure standards.

(A) The petition must include data demonstrating that closure by removal or decontamination standards were met, or it must demonstrate that the unit closed under State requirements that met or exceeded the applicable 264 closure-by-removal standard.

(B) The Regional Administrator shall approve or deny the petition according to the procedures outlined in paragraph (c)(6) of this section.

(6) *Procedures for closure equivalency determination.* (i) If a facility owner/operator seeks an equivalency demonstration under § 270.1(c)(5), the Regional Administrator will provide the public, through a newspaper notice, the opportunity to submit written comments on the information submitted by the owner/operator within 30 days from the date of the notice.

Tribromomethane
1,1,1-Trichloroethane
1,1,2-Trichloroethane
Trichloroethene
Trichloromonofluoromethane
1,2,3-Trichloropropane
Vinyl chloride

Semivolatiles

Bis(2-chloroethoxy)ethane
Bis(2-chloroethyl)ether
Bis(2-chloroisopropyl) ether
p-Chloroaniline
Chlorobenzilate
p-Chloro-m-cresol
2-Chloronaphthalene
2-Chlorophenol
3-Chloropropionitrile
m-Dichlorobenzene
o-Dichlorobenzene
p-Dichlorobenzene
3,3'-Dichlorobenzidine
2,4-Dichlorophenol
2,6-Dichlorophenol
Hexachlorobenzene
Hexachlorobutadiene
Hexachlorocyclopentadiene
Hexachloroethane
Hexachloroprophene
Hexachloropropene
4,4'-Methylenebis(2-chloroaniline)
Pentachlorobenzene
Pentachloroethane
Pentachloronitrobenzene
Pentachlorophenol
Pronamide
1,2,4,5-Tetrachlorobenzene
2,3,4,6-Tetrachlorophenol
1,2,4-Trichlorobenzene
2,4,5-Trichlorophenol
2,4,6-Trichlorophenol
Tris(2,3-dibromopropyl)phosphate

Organochlorine Pesticides

Aldrin
alpha-BHC
beta-BHC
delta-BHC
gamma-BHC
Chlordane
DDD
DDE
DDT
Dieldrin
Endosulfan I
Endosulfan II
Endrin
Endrin aldehyde
Heptachlor
Heptachlor epoxide
Isodrin
Kepone
Methoxyclor
Toxaphene

Phenoxyacetic Acid Herbicides

2,4-Dichlorophenoxyacetic acid
Silvex
2,4,5-T

PCBs

Aroclor 1016
Aroclor 1221
Aroclor 1232
Aroclor 1242
Aroclor 1248
Aroclor 1254
Aroclor 1260
PCBs not otherwise specified

Dioxins and Furans

Hexachlorodibenzo-p-dioxins
Hexachlorodibenzofuran
Pentachlorodibenzo-p-dioxins
Pentachlorodibenzofuran
Tetrachlorodibenzo-p-dioxins
Tetrachlorodibenzofuran
2,3,7,8-Tetrachlorodibenzo-p-dioxin

[52 FR 25791, July 8, 1987]

PART 270—EPA ADMINISTERED PERMIT PROGRAMS: THE HAZARDOUS WASTE PERMIT PROGRAM

Subpart A—General Information

Sec.
270.1 Purpose and scope of these regulations.
270.2 Definitions.
270.3 Considerations under Federal law.
270.4 Effect of a permit.
270.5 Noncompliance and program reporting by the Director.
270.6 References.

Subpart B—Permit Application

270.10 General application requirements.
270.11 Signatories to permit applications and reports.
270.12 Confidentiality of information.
270.13 Contents of Part A of the permit application.
270.14 Contents of Part B: General requirements.
270.15 Specific Part B information requirements for containers.
270.16 Specific Part B information requirements for tank systems.
270.17 Specific Part B information requirements for surface impoundments.
270.18 Specific Part B information requirements for waste piles.
270.19 Specific Part B information requirements for incinerators.
270.20 Specific Part B information requirements for land treatment facilities.
270.21 Specific Part B information requirements for landfills.
270.22 [Reserved]
270.23 Specific Part B information requirements for miscellaneous units.

Subpart C—Permit Conditions

270.30 Conditions applicable to all permits.
270.31 Requirements for recording and reporting of monitoring results.
270.32 Establishing permit conditions.
270.33 Schedules of compliance.

Subpart D—Changes to Permits

270.40 Transfer of permits.
270.41 Major modification or revocation and reissuance of permits.
270.42 Minor modifications of permits.
270.43 Termination of permits.

Subpart E—Expiration and Continuation of Permits

270.50 Duration of permits.
270.51 Continuation of expiring permits.

Subpart F—Special Forms of Permits

270.60 Permits by rule.
270.61 Emergency permits.
270.62 Hazardous waste incinerator permits.
270.63 Permits for land treatment demonstrations using field test or laboratory analyses.
270.64 Interim permits for UIC wells.
270.65 Research, development, and demonstration permits.

Subpart G—Interim Status

270.70 Qualifying for interim status.
270.71 Operation during interim status.
270.72 Changes during interim status.
270.73 Termination of interim status.

AUTHORITY: 42 U.S.C. 6905, 6912, 6925, 6927, 6939, and 6974.

SOURCE: 48 FR 14228, Apr. 1, 1983, unless otherwise noted.

Subpart A—General Information

§ 270.1 Purpose and scope of these regulations.

(a) *Coverage.* (1) These permit regulations establish provisions for the Hazardous Waste Permit Program under Subtitle C of the Solid Waste Disposal Act, as amended by the Resource Conservation and Recovery Act of 1976, as amended (RCRA), (Pub. L. 94-580, as amended by Pub. L. 95-609 and by Pub. L. 96-482; 42 U.S.C. 6091 et seq.). They apply to EPA and to approved States to the extent provided in Part 271.

(2) The regulations in this part cover basic EPA permitting requirements, such as application requirements, standard permit conditions, and monitoring and reporting requirements. These regulations are part of a regulatory scheme implementing RCRA set forth in different parts of the Code of Federal Regulations. The following chart indicates where the regulations implementing RCRA appear in the Code of Federal Regulations.

Section of RCRA	Coverage	Final regulation
Subtitle C	Overview and definitions	40 CFR Part 260
3001	Indentification and listing of hazardous waste.	40 CFR Part 261
3002	Generators of hazardous waste.	40 CFR Part 262
3003	Transporters of hazardous waste.	40 CFR Part 263
3004	Standards for HWM facilities.	40 CFR Parts 264, 265, 266, and 267
3005	Permit requirements for HWM facilities.	40 CFR Parts 270 and 124
3006	Guidelines for State programs.	40 CFR Part 271
3010	Preliminary notification of HWM activity.	(public notice) 45 *FR* 12746 February 26, 1980

(3) *Technical regulations.* The RCRA permit program has separate additional Regulations that contain technical requirements. These separate regulations are used by permit issuing authorities to determine what requirements must be placed in permits if they are issued. These separate regulations are located in 40 CFR Parts 264, 266, and 267.

(b) *Overview of the RCRA Permit Program.* Not later than 90 days after the promulgation or revision of regulations in 40 CFR Part 261 (identifying and listing hazardous wastes) generators and transporters of hazardous waste, and owners or operators of hazardous waste treatment, storage, or disposal facilities may be required to file a notification of that activity under section 3010. Six months after the initial promulgation of the Part 261 regulations, treatment, storage, or disposal of hazardous waste by any person who has not applied for or received a RCRA permit is prohibited. A RCRA permit application consists of two parts, Part A (see § 270.13) and

NPDES means National Pollutant Discharge Elimination System.

New HWM facility means a Hazardous Waste Management facility which began operation or for which construction commenced after November 19, 1980.

Off-site means any site which is not on-site.

On-site means on the same or geographically contiguous property which may be divided by public or private right(s)-of-way, provided the entrance and exit between the properties is at a cross-roads intersection, and access is by crossing as opposed to going along, the right(s)-of-way. Noncontiguous properties owned by the same person but connected by a right-of-way which the person controls and to which the public does not have access, is also considered on-site property.

Owner or operator means the owner or operator of any facility or activity subject to regulation under RCRA.

Permit means an authorization, license, or equivalent control document issued by EPA or an approved State to implement the requirements of this part and Parts 271 and 124. Permit includes permit by rule (§ 270.60), and emergency permit (§ 270.61). Permit does not include RCRA interim status (Subpart G of this part), or any permit which has not yet been the subject of final agency action, such as a draft permit or a proposed permit.

Permit-by-rule means a provision of these regulations stating that a facility or activity is deemed to have a RCRA permit if it meets the requirements of the provision.

Person means an individual, association, partnership, corporation, municipality, State or Federal agency, or an agent or employee thereof.

Phase I means that phase of the Federal hazardous waste management program commencing on the effective date of the last of the following to be initially promulgated: 40 CFR Parts 260, 261, 262, 263, 265, 270 and 271. Promulgation of Phase I refers to promulgation of the regulations necessary for Phase I to begin.

Phase II means that phase of Federal hazardous waste management program commencing on the effective date of the first subpart of 40 CFR Part 264, Subparts F through R to be initially promulgated. Promulgation of Phase II refers to promulgation of the regulations necessary for Phase II to begin.

Physical construction means excavation, movement of earth, erection of forms or structures, or similar activity to prepare an HWM facility to accept hazardous waste.

POTW means publicly owned treatment works.

Publicly owned treatment works (POTW) means any device or system unsed in the treatment (including recycling and reclamation) of municipal sewage or industrial wastes of a liquid nature which is owned by a State or municipality. This definition includes sewers, pipes, or other conveyances only if they convey wastewater to a POTW providing treatment.

RCRA means the Solid Waste Disposal Act as amended by the Resource Conservation and Recovery Act of 1976 (Pub. L. 94-580, as amended by Pub. L. 95-609 and Pub. L. 96-482, 42 U.S.C. 6901 *et seq.*)

Regional Administrator means the Regional Administrator of the appropriate Regional Office of the Environmental Protection Agency or the authorized representative of the Regional Administrator.

Schedule of compliance means a schedule of remedial measures included in a permit, including an enforceable sequence of interim requirements (for example, actions, operations, or milestone events) leading to compliance with the Act and regulations.

SDWA means the Safe Drinking Water Act (Pub. L. 95-523, as amended by Pub. L. 95-1900; 42 U.S.C. 3001 *et seq.*).

Site means the land or water area where any facility or activity is physically located or conducted, including adjacent land used in connection with the facility or activity.

State means any of the 50 States, the District of Columbia, Guam, the Commonwealth of Puerto Rico, the Virgin Islands, American Samoa, and the Commonwealth of the Northern Mariana Islands.

State Director means the chief administrative officer of any State agency operating an approved program, or the delegated representative of the State Director. If responsibility is divided among two or more State agencies, State Director means the chief administrative officer of the State agency authorized to perform the particular procedure or function to which reference is made.

State/EPA Agreement means an agreement between the Regional Administrator and the State which coordinates EPA and State activities, responsibilities and programs.

Storage means the holding of hazardous waste for a temporary period, at the end of which the hazardous waste is treated, disposed, or stored elsewhere.

Transfer facility means any transportation-related facility including loading docks, parking areas, storage areas and other similar areas where shipments of hazardous waste are held during the normal course of transportation.

Transporter means a person engaged in the off-site transportation of hazardous waste by air, rail, highway or water.

Treatment means any method, technique, or process, including neutralization, designed to change the physical, chemical, or biological character or composition of any hazardous waste so as to neutralize such wastes, or so as to recover energy or material resources from the waste, or so as to render such waste non-hazardous, or less hazardous; safer to transport, store, or dispose of; or amenable for recovery, amenable for storage, or reduced in volume.

UIC means the Underground Injection Control Program under Part C of the Safe Drinking Water Act, including an approved program.

Underground injection means a well injection.

Underground source of drinking water (*USDW*) means an aquifer or its portion:

(a)(1) Which supplies any public water system; or

(2) Which contains a sufficient quantity of ground water to supply a public water system; and

(i) Currently supplies drinking water for human consumption; or

(ii) Contains fewer than 10,000 mg/l total dissolved solids; and

(b) Which is not an exempted aquifer.

USDW means underground source of drinking water.

Wastewater treatment unit means a device which:

(a) Is part of a wastewater treatment facility which is subject to regulation under either section 402 or 307(b) of the Clean Water Act; and

(b) Receives and treats or stores an influent wastewater which is a hazardous waste as defined in § 261.3 of this chapter, or generates and accumulates a wastewater treatment sludge which is a hazardous waste as defined in § 261.3 of this chapter, or treats or stores a wastewater treatment sludge which is a hazardous waste as defined in § 261.3 of this chapter; and

(c) Meets the definition of tank in § 260.10 of this chapter.

[48 FR 14228, Apr. 1, 1983, as amended at 48 FR 30113, June 30, 1983]

§ 270.3 Considerations under Federal law.

The following is a list of Federal laws that may apply to the issuance of permits under these rules. When any of these laws is applicable, its procedures must be followed. When the applicable law requires consideration or adoption of particular permit conditions or requires the denial of a permit, those requirements also must be followed.

(a) *The Wild and Scenic Rivers Act.* 16 U.S.C. 1273 *et seq.* Section 7 of the Act prohibits the Regional Administrator from assisting by license or otherwise the construction of any water resources project that would have a direct, adverse effect on the values for which a national wild and scenic river was established.

(b) *The National Historic Preservation Act of 1966.* 16 U.S.C. 470 *et seq.* Section 106 of the Act and implementing regulations (36 CFR Part 800) require the Regional Administrator, before issuing a license, to adopt measures when feasible to mitigate potential adverse effects of the licensed activity and properties listed or eligible for listing in the National Register of Historic Places. The Act's require-

The Regional Administrator will also, in response to a request or at his/her own discretion, hold a public hearing whenever such a hearing might clarify one or more issues concerning the equivalence of the Part 265 closure to a Part 264 closure. The Regional Administrator will give public notice of the hearing at least 30 days before it occurs. (Public notice of the hearing may be given at the same time as notice of the opportunity for the public to submit written comments, and the two notices may be combined.)

(ii) The Regional Administrator will determine whether the Part 265 closure met 264 closure by removal or decontamination requirements within 90 days of its receipt. If the Regional Administrator finds that the closure did not meet the applicable Part 264 standards, he/she will provide the owner/operator with a written statement of the reasons why the closure failed to meet Part 264 standards. The owner/operator may submit additional information in support of an equivalency demonstration within 30 days after receiving such written statement. The Regional Administrator will review any additional information submitted and make a final determination within 60 days.

(iii) If the Regional Administrator determines that the facility did not close in accordance with Part 264 closure by removal standards, the facility is subject to post-closure permitting requirements.

[48 FR 14228, Apr. 1, 1983, as amended at 48 FR 30113, June 30, 1983; 51 FR 10176, Mar. 24, 1986; 52 FR 45798, Dec. 1, 1987]

§ 270.2 Definitions.

The following definitions apply to Parts 270, 271 and 124. Terms not defined in this section have the meaning given by RCRA.

Administrator means the Administrator of the United States Environmental Protection Agency, or an authorized representative.

Application means the EPA standard national forms for applying for a permit, including any additions, revisions or modifications to the forms; or forms approved by EPA for use in approved States, including any approved modifications or revisions. Application also includes the information required by the Director under §§ 270.14 through 270.29 (contents of Part B of the RCRA application).

Approved program or approved State means a State which has been approved or authorized by EPA under Part 271.

Aquifer means a geological formation, group of formations, or part of a formation that is capable of yielding a significant amount of water to a well or spring.

Closure means the act of securing a Hazardous Waste Management facility pursuant to the requirements of 40 CFR Part 264.

CWA means the Clean Water Act (formerly referred to as the Federal Water Pollution Control Act or Federal Water Pollution Control Act amendments of 1972) Pub. L. 92-500, as amended by Pub. L. 92-217 and Pub. L. 95-576; 33 U.S.C. 1251 *et seq.*

Director means the Regional Administrator or the State Director, as the context requires, or an authorized representative. When there is no approved State program, and there is an EPA administered program, Director means the Regional Administrator. When there is an approved State program, Director normally means the State Director. In some circumstances, however, EPA retains the authority to take certain actions even when there is an approved State program. In such cases, the term Director means the Regional Administrator and not the State Director.

Disposal means the discharge, deposit, injection, dumping, spilling, leaking, or placing of any hazardous waste into or on any land or water so that such hazardous waste or any constituent thereof may enter the environment or be emitted into the air or discharged into any waters, including ground water.

Disposal facility means a facility or part of a facility at which hazardous waste is intentionally placed into or on the land or water, and at which hazardous waste will remain after closure.

Draft permit means a document prepared under § 124.6 indicating the Director's tentative decision to issue or deny, modify, revoke and reissue, terminate, or reissue a permit. A notice of

intent to terminate a permit, and a notice of intent to deny a permit, as discussed in § 124.5, are types of draft permits. A denial of a request for modification, revocation and reissuance, or termination, as discussed in § 124.5 is not a "draft permit." A proposed permit is not a draft permit.

Elementary neutralization unit means a device which:

(a) Is used for neutralizing wastes which are hazardous wastes only because they exhibit the corrosivity characteristic defined in § 261.22 of this chapter, or are listed in Subpart D of Part 261 of this chapter only for this reason; and

(b) Meets the definition of tank, container, transport vehicle, or vessel in § 260.10 of this chapter.

Emergency permit means a RCRA permit issued in accordance with § 270.61.

Environmental Protection Agency (EPA) means the United States Environmental Protection Agency.

EPA means the United States Environmental Protection Agency.

Existing hazardous waste management (HWM) facility or existing facility means a facility which was in operation or for which construction commenced on or before November 19, 1980. A facility has commenced construction if:

(a) The owner or operator has obtained the Federal, State and local approvals or permits necessary to begin physical construction; and either

(b)(1) A continuous on-site, physical construction program has begun; or

(2) The owner or operator has entered into contractual obligations which cannot be cancelled or modified without substantial loss—for physical construction of the facility to be completed within a reasonable time.

Facility or activity means any HWM facility or any other facility or activity (including land or appurtenances thereto) that is subject to regulation under the RCRA program.

Federal, State and local approvals or permits necessary to begin physical construction means permits and approvals required under Federal, State or local hazardous waste control statutes, regulations or ordinances.

Final authorization means approval by EPA of a State program which has met the requirements of section 3006(b) of RCRA and the applicable requirements of Part 271, Subpart A.

Generator means any person, by site location, whose act, or process produces "hazardous waste" identified or listed in 40 CFR Part 261.

Ground water means water below the land surface in a zone of saturation.

Hazardous waste means a hazardous waste as defined in 40 CFR 261.3.

Hazardous Waste Management facility (HWM facility) means all contiguous land, and structures, other appurtenances, and improvements on the land, used for treating, storing, or disposing of hazardous waste. A facility may consist of several treatment, storage, or disposal operational units (for example, one or more landfills, surface impoundments, or combinations of them).

HWM facility means Hazardous Waste Management facility.

Injection well means a well into which fluids are being injected.

In operation means a facility which is treating, storing, or disposing of hazardous waste.

Interim authorization means approval by EPA of a State hazardous waste program which has met the requirements of section 3006(c) of RCRA and applicable requirements of Part 271, Subpart B.

Major facility means any facility or activity classified as such by the Regional Administrator, or, in the case of approved State programs, the Regional Administrator in conjunction with the State Director.

Manifest means the shipping document originated and signed by the generator which contains the information required by Subpart B of 40 CFR Part 262.

National Pollutant Discharge Elimination System means the national program for issuing, modifying, revoking and reissuing, terminating, monitoring and enforcing permits, and imposing and enforcing pretreatment requirements, under sections 307, 402, 318, and 405 of the CWA. The term includes an approved program.

scribed by the Administrator and shall be reported according to EPA characteristics and lists of hazardous wastes at 40 CFR Part 261.

(c) *Schedule.* (1) For all quarterly reports. On the last working day of May, August, November, and February, the State Director shall submit to the Regional Administrator information concerning noncompliance with RCRA permit requirements by major facilities in the State in accordance with the following schedule. The Regional Administrator shall prepare and submit information for EPA-issued permits to EPA Headquarters in accordance with the same schedule.

QUARTERS COVERED BY REPORTS ON NONCOMPLIANCE BY MAJOR DISCHARGERS

[Date for completion of reports]

January, February, and March	[1] May 31
April, May, and June	[1] August 31
July, August, and September	[1] November 30
October, November, and December.	[1] February 28

[1] Reports must be made available to the public for inspection and copying on this date.

[48 FR 14228, Apr. 1, 1983, as amended at 48 FR 30113, June 30, 1983]

§ 270.6 References.

(a) When used in Part 270 of this chapter, the following publications are incorporated by reference:

"Test Methods for Evaluating Solid Waste, Physical/Chemical Methods", EPA Publication SW-846 [Second Edition, 1982 as amended by Update I (April, 1984), and Update II (April, 1985)]. The second edition of SW-846 and Updates I, II and III are available from the National Technical Information Service, 5285 Port Royal Road, Springfield, VA 22161, (703) 487-4600, as document no. PB 87-120-291. The cost is $48.95 for paper and $13.50 for microfiche.

(b) The references listed in paragraph (a) of this section are also available for inspection at the Office of the Federal Register, 1100 L Street, NW., Washington, DC 20408. These incorporations by reference were approved by the Director of the Federal Register. These materials are incorporated as they exist on the date of approval and a notice of any change in these materials will be published in the FEDERAL REGISTER.

[48 FR 14228, Apr. 1, 1983, as amended at 48 FR 30113, June 30, 1983; 52 FR 8073, Mar. 16, 1987]

Subpart B—Permit Application

§ 270.10 General application requirements.

(a) *Permit application.* Any person who is required to have a permit (including new applicants and permittees with expiring permits) shall complete, sign, and submit an application to the Director as described in this section and §§ 270.70 through 270.73. Persons currently authorized with interim status shall apply for permits when required by the Director. Persons covered by RCRA permits by rule (§ 270.60), need not apply. Procedures for applications, issuance and administration of emergency permits are found exclusively in § 270.61. Procedures for application, issuance and administration of research, development, and demonstration permits are found exclusively in § 270.65.

(b) *Who applies?* When a facility or activity is owned by one person but is operated by another person, it is the operator's duty to obtain a permit, except that the owner must also sign the permit application.

(c) *Completeness.* The Director shall not issue a permit before receiving a complete application for a permit except for permits by rule, or emergency permits. An application for a permit is complete when the Director receives an application form and any supplemental information which are completed to his satisfaction. An application for a permit is complete notwithstanding the failure of the owner or operator to submit the exposure information described in paragraph (j) of this section.

(d) *Information requirements.* All applicants for RCRA permits shall provide information set forth in § 270.13 and applicable sections in §§ 270.14 through 270.29 to the Director, using the application form provided by the Director.

(e) *Existing HWM facilities and interim status qualifications.* (1) Owners and operators of existing hazardous waste management facilities or of hazardous waste management facilities in existence on the effective date of statutory or regulatory amendments under the act that render the facility subject to the requirement to have a RCRA permit must submit Part A of their permit application no later than:

(i) Six months after the date of publication of regulations which first require them to comply with the standards set forth in 40 CFR Part 265 or 266, or

(ii) Thirty days after the date they first become subject to the standards set forth in 40 CFR Part 265 or 266, whichever first occurs.

(iii) For generators generating greater than 100 kilograms but less than 1000 kilograms of hazardous waste in a calendar month and treats, stores, or disposes of these wastes on-site, by March 24, 1987.

NOTE: For facilities which must comply with Part 265 because they handle a waste listed in EPA's May 19, 1980, Part 261 regulations (45 FR 33066 *et seq.*), the deadline for submitting an application is November 19, 1980. Where other existing facilities must begin in complying with Part 265 or 266 at a later date because of revisions to Part 260, 261, 265, or 266, the Administrator will specify in the preamble to those revisions when those facilities must submit a permit application.

(2) The Administrator may by publication in the FEDERAL REGISTER extend the date by which owners and operators of specified classes of existing hazardous waste management facilities must submit Part A of their permit application if he finds that (i) there has been substantial confusion as to whether the owners and operators of such facilities were required to file a permit application and (ii) such confusion is attributed to ambiguities in EPA's Parts 260, 261, 265, or 266 regulations.

(3) The Administrator may by compliance order issued under section 3008 of RCRA extend the date by which the owner and operator of an existing hazardous waste management facility must submit Part A of their permit application.

(4) At any time after promulgation of Phase II the owner and operator of an existing HWM facility may be required to submit Part B of their permit application. The State Director may require submission of Part B (or equivalent completion of the State RCRA application process) if the State in which the facility is located has received interim authorization for Phase II or final authorization; if not, the Regional Administrator may require submission of Part B. Any owner or operator shall be allowed at least six months from the date of request to submit Part B of the application. Any owner or operator of an existing HWM facility may voluntarily submit Part B of the application at any time. Notwithstanding the above, any owner or operator of an existing HWM facility must submit a Part B permit application in accordance with the dates specified in § 270.73. Any owner or operator of a land disposal facility in existence on the effective date of statutory or regulatory amendments under this Act that render the facility subject to the requirement to have a RCRA permit must submit a Part B application in accordance with the dates specified in § 270.73.

(5) Failure to furnish a requested Part B application on time, or to furnish in full the information required by the Part B application, is grounds for termination of interim status under Part 124.

(f) *New HWM facilities.* (1) Except as provided in paragraph (f)(3) of this section, no person shall begin physical construction of a new HWM facility without having submitted Parts A and B of the permit application and having received a finally effective RCRA permit.

(2) An application for a permit for a new HWM facility (including both Parts A and B) may be filed any time after promulgation of those standards in Part 264, Subpart I *et seq.* applicable to such facility. The application shall be filed with the Regional Administrator if at the time of application the State in which the new HWM facility is proposed to be located has not received Phase II interim authorization for permitting such facility or final authorization; otherwise it shall be filed with the State Director. Except as provided in paragraph (f)(3) of this section, all applications must be submitted at least 180 days before

ments are to be implemented in cooperation with State Historic Preservation Officers and upon notice to, and when appropriate, in consultation with the Advisory Council on Historic Preservation.

(c) *The Endangered Species Act.* 16 U.S.C. 1531 *et seq.* Section 7 of the Act and implementing regulations (50 CFR Part 402) require the Regional Administrator to ensure, in consultation with the Secretary of the Interior or Commerce, that any action authorized by EPA is not likely to jeopardize the continued existence of any endangered or threatened species or adversely affect its critical habitat.

(d) *The Coastal Zone Management Act.* 16 U.S.C. 1451 *et seq.* Section 307(c) of the Act and implementing regulations (15 CFR Part 930) prohibit EPA from issuing a permit for an activity affecting land or water use in the coastal zone until the applicant certifies that the proposed activity complies with the State Coastal Zone Management program, and the State or its designated agency concurs with the certification (or the Secretary of Commerce overrides the State's nonconcurrence).

(e) *The Fish and Wildlife Coordination Act.* 16 U.S.C. 661 *et seq.* requires that the Regional Administrator, before issuing a permit proposing or authorizing the impoundment (with certain exemptions), diversion, or other control or modification of any body of water, consult with the appropriate State agency exercising jurisdiction over wildlife resources to conserve those resources.

(f) *Executive orders.* [Reserved]

(Clean Water Act (33 U.S.C. 1251 et seq.), Safe Drinking Water Act (42 U.S.C. 300f et seq.), Clean Air Act (42 U.S.C. 7401 et seq.), Resource Conservation and Recovery Act (42 U.S.C. 6901 et seq.))

[48 FR 14228, Apr 1, 1983, as amended at 48 FR 39622, Sept. 1, 1983]

§ 270.4 Effect of a permit.

(a) Compliance with an RCRA permit during its term constitutes compliance for purpose of enforcement, with Subtitle C of RCRA except for those requirements not included in the permit which become effective by statute, or which are promulgated under Part 268 of this chapter restricting the placement of hazardous wastes in or on the land.

(b) The issuance of a permit does not convey any property rights of any sort, or any exclusive privilege.

(c) The issuance of a permit does not authorize any injury to persons or property or invasion of other private rights, or any infringement of State or local law or regulations.

[48 FR 14228, Apr. 1, 1983, as amended at 52 FR 45799, Dec. 1, 1987]

§ 270.5 Noncompliance and program reporting by the Director.

The Director shall prepare quarterly and annual reports as detailed below. When the State is the permit-issuing authority, the State Director shall submit any reports required under this section to the Regional Administrator. When EPA is the permit-issuing authority, the Regional Administrator shall submit any report required under this section to EPA Headquarters. For purposes of this section only, RCRA permittees shall include RCRA interim status facilities, when appropriate.

(a) *Quarterly reports.* The Director shall submit quarterly narrative reports for major facilities as follows:

(1) *Format.* The report shall use the following format:

(i) Information on noncompliance for each facility;

(ii) Alphabetize by permittee name. When two or more permittees have the same name, the lowest permit number shall be entered first;

(iii) For each entry on the list, include the following information in the following order:

(A) Name, location, and permit number of the noncomplying permittee.

(B) A brief description and date of each instance of noncompliance for that permittee. Instances of noncompliance may include one or more of the kinds set forth in paragraph (a)(2) of this section. When a permittee has noncompliance of more than one kind, combine the information into a single entry for each such permittee.

(C) The date(s) and a brief description of the action(s) taken by the Director to ensure compliance.

(D) Status of the instance(s) of noncompliance with the date of the review of the status or the date of resolution.

(E) Any details which tend to explain or mitigate the instance(s) of noncompliance.

(2) *Instances of noncompliance to be reported.* Any instances of noncompliance within the following categories shall be reported in successive reports until the noncompliance is reported as resolved. Once noncompliance is reported as resolved it need not appear in subsequent reports.

(i) *Failure to complete construction elements.* When the permittee has failed to complete, by the date specified in the permit, an element of a compliance schedule involving either planning for construction (for example, award of a contract, preliminary plans), or a construction step (for example, begin construction, attain operation level); and the permittee has not returned to compliance by accomplishing the required element of the schedule within 30 days from the date a compliance schedule report is due under the permit.

(ii) *Modifications to schedules of compliance.* When a schedule of compliance in the permit has been modified under § 270.41 or § 270.42 because of the permittee's noncompliance.

(iii) *Failure to complete or provide compliance schedule or monitoring reports.* When the permittee has failed to complete or provide a report required in a permit compliance schedule (for example, progress report or notice of noncompliance or compliance) or a monitoring report; and the permittee has not submitted the complete report within 30 days from the date it is due under the permit for compliance schedules, or from the date specified in the permit for monitoring reports.

(iv) *Deficient reports.* When the required reports provided by the permittee are so deficient as to cause misunderstanding by the Director and thus impede the review of the status of compliance.

(v) *Noncompliance with other permit requirements.* Noncompliance shall be reported in the following circumstances:

(A) Whenever the permittee has violated a permit requirement (other than reported under paragraph (a)(2)(i) or (ii) of this section), and has not returned to compliance within 45 days from the date reporting of noncompliance was due under the permit; or

(B) When the Director determines that a pattern of noncompliance exists for a major facility permittee over the most recent four consecutive reporting periods. This pattern includes any violation of the same requirement in two consecutive reporting periods, and any violation of one or more requirements in each of four consecutive reporting periods; or

(C) When the Director determines significant permit non-compliance or other significant event has occurred such as a fire or explosion or migration of fluids into a USDW.

(vi) *All other.* Statistical information shall be reported quarterly on all other instances of noncompliance by major facilities with permit requirements not otherwise reported under paragraph (a) of this section.

(b) *Annual reports*—(1) *Annual noncompliance report.* Statistical reports shall be submitted by the Director on nonmajor RCRA permittees indicating the total number reviewed, the number of noncomplying nonmajor permittees, the number of enforcement actions, and number of permit modifications extending compliance deadlines. The statistical information shall be organized to follow the types of noncompliance listed in paragraph (a) of this section.

(2) In addition to the annual noncompliance report, the Director shall prepare a "program report" which contains information (in a manner and form prescribed by the Administrator) on generators and transporters and the permit status of regulated facilities. The Director shall also include, on a biennial basis, summary information on the quantities and types of hazardous wastes generated, transported, treated, stored and disposed during the preceding odd-numbered year. This summary information shall be reported in a manner and form pre-

that there are significant penalties for submitting false information, including the possibility of fine and imprisonment for knowing violations.

(Clean Water Act (33 U.S.C. 1251 et seq.), Safe Drinking Water Act (42 U.S.C. 300f et seq.), Clean Air Act (42 U.S.C. 7401 et seq.), Resource Conservation and Recovery Act (42 U.S.C. 6901 et seq.))

[48 FR 14228, Apr. 1, 1983, as amended at 48 FR 39622, Sept. 1, 1983]

§ 270.12 Confidentiality of information.

(a) In accordance with 40 CFR Part 2, any information submitted to EPA pursuant to these regulations may be claimed as confidential by the submitter. Any such claim must be asserted at the time of submission in the manner prescribed on the application form or instructions or, in the case of other submissions, by stamping the words "confidential business information" on each page containing such information. If no claim is made at the time of submission, EPA may make the information available to the public without further notice. If a claim is asserted, the information will be treated in accordance with the procedures in 40 CFR Part 2 (Public Information).

(b) Claims of confidentiality for the name and address of any permit applicant or permittee will be denied.

§ 270.13 Contents of Part A of the permit application.

Part A of the RCRA application shall include the following information:

(a) The activities conducted by the applicant which require it to obtain a permit under RCRA.

(b) Name, mailing address, and location, including latitude and longitude of the facility for which the application is submitted.

(c) Up to four SIC codes which best reflect the principal products or services provided by the facility.

(d) The operator's name, address, telephone number, ownership status, and status as Federal, State, private, public, or other entity.

(e) The name, address, and phone number of the owner of the facility.

(f) Whether the facility is located on Indian lands.

(g) An indication of whether the facility is new or existing and whether it is a first or revised application.

(h) For existing facilities, (1) a scale drawing of the facility showing the location of all past, present, and future treatment, storage, and disposal areas; and (2) photographs of the facility clearly delineating all existing structures; existing treatment, storage, and disposal areas; and sites of future treatment, storage, and disposal areas.

(i) A description of the processes to be used for treating, storing, and disposing of hazardous waste, and the design capacity of these items.

(j) A specification of the hazardous wastes listed or designated under 40 CFR Part 261 to be treated, stored, or disposed of at the facility, an estimate of the quantity of such wastes to be treated, stored, or disposed annually, and a general description of the processes to be used for such wastes.

(k) A listing of all permits or construction approvals received or applied for under any of the following programs:

(1) Hazardous Waste Management program under RCRA.

(2) UIC program under the SWDA.

(3) NPDES program under the CWA.

(4) Prevention of Significant Deterioration (PSD) program under the Clean Air Act.

(5) Nonattainment program under the Clean Air Act.

(6) National Emission Standards for Hazardous Pollutants (NESHAPS) preconstruction approval under the Clean Air Act.

(7) Ocean dumping permits under the Marine Protection Research and Sancturaies Act.

(8) Dredge or fill permits under section 404 of the CWA.

(9) Other relevant environmental permits, including State permits.

(l) A topographic map (or other map if a topographic map is unavailable) extending one mile beyond the property boundaries of the source, depicting the facility and each of its intake and discharge structures; each of its hazardous waste treatment, storage, or disposal facilities; each well where fluids from the facility are injected underground; and those wells, springs, other surface water bodies, and drinking water wells listed in public records or otherwise known to the applicant within ¼ mile of the facility property boundary.

(m) A brief description of the nature of the business.

§ 270.14 Contents of Part B: General requirements.

(a) Part B of the permit application consists of the general information requirements of this section, and the specific information requirements in §§ 270.14 through 270.29 applicable to the facility. The Part B information requirements presented in §§ 270.14 through 270.29 reflect the standards promulgated in 40 CFR Part 264. These information requirements are necessary in order for EPA to determine compliance with the Part 264 standards. If owners and operators of HWM facilities can demonstrate that the information prescribed in Part B can not be provided to the extent required, the Director may make allowance for submission of such information on a case-by-case basis. Information required in Part B shall be submitted to the Director and signed in accordance with requirements in § 270.11. Certain technical data, such as design drawings and specifications, and engineering studies shall be certified by a registered professional engineer.

(b) General information requirements. The following information is required for all HWM facilities, except as § 264.1 provides otherwise:

(1) A general description of the facility.

(2) Chemical and physical analyses of the hazardous waste to be handled at the facility. At a minimum, these analyses shall contain all the information which must be known to treat, store, or dispose of the wastes properly in accordance with Part 264.

(3) A copy of the waste analysis plan required by § 264.13(b) and, if applicable § 264.13(c).

(4) A description of the security procedures and equipment required by § 264.14, or a justification demonstrating the reasons for requesting a waiver of this requirement.

(5) A copy of the general inspection schedule required by § 264.15(b). Include, where applicable, as part of the inspection schedule, specific requirements in §§ 264.174, 264.194, 264.226, 264.254, 264.273, 264.303, and 264.602.

(6) A justification of any request for a waiver(s) of the preparedness and prevention requirements of Part 264, Subpart C.

(7) A copy of the contingency plan required by Part 264, Subpart D. Note: Include, where applicable, as part of the contingency plan, specific requirements in §§ 264.227, 264.255, and 264.200.

(8) A description of procedures, structures, or equipment used at the facility to:

(i) Prevent hazards in unloading operations (for example, ramps, special forklifts);

(ii) Prevent runoff from hazardous waste handling areas to other areas of the facility or environment, or to prevent flooding (for example, berms, dikes, trenches);

(iii) Prevent contamination of water supplies;

(iv) Mitigate effects of equipment failure and power outages; and

(v) Prevent undue exposure of personnel to hazardous waste (for example, protective clothing).

(9) A description of precautions to prevent accidental ignition or reaction of ignitable, reactive, or incompatible wastes as required to demonstrate compliance with § 264.17 including documentation demonstrating compliance with § 264.17(c).

(10) Traffic pattern, estimated volume (number, types of vehicles) and control (for example, show turns across traffic lanes, and stacking lanes (if appropriate); describe access road surfacing and load bearing capacity; show traffic control signals).

(11) Facility location information:

(i) In order to determine the applicability of the seismic standard [§ 264.18(a)] the owner or operator of a new facility must identify the political jurisdiction (e.g., county, township, or election district) in which the facility is proposed to be located.

[*Comment*: If the county or election district is not listed in Appendix VI of Part 264, no

physical construction is expected to commence.

(3) Notwithstanding paragraph (f)(1) of this section, a person may construct a facility for the incineration of polychlorinated biphenyls pursuant to an approval issued by the Administrator under section (6)(e) of the Toxic Substances Control Act and any person owning or operating such a facility may, at any time after construction or operation of such facility has begun, file an application for a RCRA permit to incinerate hazardous waste authorizing such facility to incinerate waste identified or listed under Subtitle C of RCRA.

(g) *Updating permit applications.* (1) If any owner or operator of a HWM facility has filed Part A of a permit application and has not yet filed Part B, the owner or operator shall file an amended Part A application:

(i) With the Regional Administrator, if the facility is located in a State which has not obtained interim authorization for phase II or final authorization, within six months after the promulgation of revised regulations under Part 261 listing or identifying additional hazardous wastes, if the facility is treating, storing, or disposing of any of those newly listed or identified wastes.

(ii) With the State Director, if the facility is located in a State which has obtained Phase II interim authorization or final authorization, no later than the effective date of regulatory provisions listing or designating wastes as hazardous in that State in addition to those listed or designated under the previously approved State program, if the facility is treating, storing, or disposing of any of those newly listed or designated wastes; or

(iii) As necessary to comply with provisions of § 270.72 for changes during interim status or with the analogous provisions of a State program approved for final authorization or interim authorization for Phase II. Revised Part A applications necessary to comply with the provisions of § 270.72 shall be filed with the Regional Administrator if the State in which the facility in question is located does not have Phase II interim authorization or final authorization; otherwise it shall be filed with the State Director (if the State has an analogous provision).

(2) The owner or operator of a facility who fails to comply with the updating requirements of paragraph (g)(1) of this section does not receive interim status as to the wastes not covered by duly filed Part A applications.

(h) *Reapplications.* Any HWM facility with an effective permit shall submit a new application at least 180 days before the expiration date of the effective permit, unless permission for a later date has been granted by the Director. (The Director shall not grant permission for applications to be submitted later than the expiration date of the existing permit.)

(i) *Recordkeeping.* Applicants shall keep records of all data used to complete permit applications and any supplemental information submitted under §§ 270.10(d), 270.13, 270.14 through 270.21 for a period of at least 3 years from the date the application is signed.

(j) *Exposure information.* (1) After August 8, 1985, any Part B permit application submitted by an owner or operator of a facility that stores, treats, or dispose of hazardous waste in a surface impoundment or a landfill must be accompanied by information, reasonably ascertainable by the owner or operator, on the potential for the public to be exposed to hazardous wastes or hazardous constituents through releases related to the unit. At a minimum, such information must address:

(i) Reasonably foreseeable potential releases from both normal operations and accidents at the unit, including releases associated with transportation to or from the unit;

(ii) The potential pathways of human exposure to hazardous wastes or constituents resulting from the releases described under paragraph (j)(1)(i) of this section; and

(iii) The potential magnitude and nature of the human exposure resulting from such releases.

(2) By August 8, 1985, owners and operators of a landfill or a surface impoundment who have already submitted a Part B application must submit the exposure information required in paragraph (j)(1) of this section.

(k) The Director may require a permittee or an applicant to submit information in order to establish permit conditions under §§ 270.32(b)(2) and 270.50(d) of this chapter.

(Approved by the Office of Management and Budget under control numbers 2050-0009, 2050-0002, and 2050-0007)

[48 FR 14228, Apr. 1, 1983; 48 FR 30114, June 30, 1983, as amended at 50 FR 28751, July 15, 1985; 51 FR 10176, Mar. 24, 1986; 52 FR 45799, Dec. 1, 1987]

§ 270.11 Signatories to permit applications and reports.

(a) *Applications.* All permit applications shall be signed as follows:

(1) *For a corporation:* By a responsible corporate officer. For the purpose of this section, a responsible corporate officer means (i) A president, secretary, treasurer, or vice-president of the corporation in charge of a principal business function, or any other person who performs similar policy- or decisionmaking functions for the corporation, or (ii) the manager of one or more manufacturing, production or operating facilities employing more than 250 persons or having gross annual sales or expenditures exceeding $25 million (in second-quarter 1980 dollars), if authority to sign documents has been assigned or delegated to the manager in accordance with corporate procedures.

NOTE: EPA does not require specific assignments or delegations of authority to responsible corporate officers identified in § 270.11(a)(1)(i). The Agency will presume that these responsible corporate officers have the requisite authority to sign permit applications unless the corporation has notified the Director to the contrary. Corporate procedures governing authority to sign permit applications may provide for assignment or delegation to applicable corporate positions under § 270.11(a)(1)(ii) rather than to specific individuals.

(2) *For a partnership or sole proprietorship;* by a general partner or the proprietor, respectively; or

(3) *For a municipality, State, Federal, or other public agency:* by either a principal executive officer or ranking elected official. For purposes of this section, a principal executive officer of a Federal agency includes: (i) The chief executive officer of the agency, or (ii) a senior executive officer having responsibility for the overall operations of a principal geographic unit of the agency (e.g., Regional Administrators of EPA).

(b) *Reports.* All reports required by permits and other information requested by the Director shall be signed by a person described in paragraph (a) of this section, or by a duly authorized representative of that person. A person is a duly authorized representative only if:

(1) The authorization is made in writing by a person described in paragraph (a) of this section;

(2) The authorization specifies either an individual or a position having responsibility for overall operation of the regulated facility or activity such as the position of plant manager, operator of a well or a well field, superintendent, or position of equivalent responsibility. (A duly authorized representative may thus be either a named individual or any individual occupying a named position); and

(3) The written authorization is submitted to the Director.

(c) *Changes to authorization.* If an authorization under paragraph (b) of this section is no longer accurate because a different individual or position has responsibility for the overall operation of the facility, a new authorization satisfying the requirements of paragraph (b) of this section must be submitted to the Director prior to or together with any reports, information, or applications to be signed by an authorized representative.

(d) *Certification.* Any person signing a document under paragraph (a) or (b) of this section shall make the following certification:

I certify under penalty of law that this document and all attachments were prepared under my direction or supervision in accordance with a system designed to assure that qualified personnel properly gather and evaluate the information submitted. Based on my inquiry of the person or persons who manage the system, or those persons directly responsible for gathering the information, the information submitted is, to the best of my knowledge and belief, true, accurate, and complete. I am aware

further information is required to demonstrate compliance with § 264.18(a).]

(ii) If the facility is proposed to be located in an area listed in Appendix VI of Part 264, the owner or operator shall demonstrate compliance with the seismic standard. This demonstration may be made using either published geologic data or data obtained from field investigations carried out by the applicant. The information provided must be of such quality to be acceptable to geologists experienced in identifying and evaluating seismic activity. The information submitted must show that either:

(A) No faults which have had displacement in Holocene time are present, or no lineations which suggest the presence of a fault (which have displacement in Holocene time) within 3,000 feet of a facility are present, based on data from:

(*1*) Published geologic studies,

(*2*) Aerial reconnaissance of the area within a five-mile radius from the facility.

(*3*) An analysis of aerial photographs covering a 3,000 foot radius of the facility, and

(*4*) If needed to clarify the above data, a reconnaissance based on walking portions of the area within 3,000 feet of the facility, or

(B) If faults (to include lineations) which have had displacement in Holocene time are present within 3,000 feet of a facility, no faults pass with 200 feet of the portions of the facility where treatment, storage, or disposal of hazardous waste will be conducted, based on data from a comprehensive geologic analysis of the site. Unless a site analysis is otherwise conclusive concerning the absence of faults within 200 feet of such portions of the facility data shall be obtained from a subsurface exploration (trenching) of the area within a distance no less than 200 feet from portions of the facility where treatment, storage, or disposal of hazardous waste will be conducted. Such trenching shall be performed in a direction that is perpendicular to known faults (which have had displacement in Holocene time) passing within 3,000 feet of the portions of the facility where treatment, storage, or disposal of hazardous waste will be conducted. Such investigation shall document with supporting maps and other analyses, the location of faults found.

[*Comment*: The Guidance Manual for the Location Standards provides greater detail on the content of each type of seismic investigation and the appropriate conditions under which each approach or a combination of approaches would be used.]

(iii) Owners and operators of all facilities shall provide an identification of whether the facility is located within a 100-year floodplain. This identification must indicate the source of data for such determination and include a copy of the relevant Federal Insurance Administration (FIA) flood map, if used, or the calculations and maps used where an FIA map is not available. Information shall also be provided identifying the 100-year flood level and any other special flooding factors (e.g., wave action) which must be considered in designing, constructing, operating, or maintaining the facility to withstand washout from a 100-year flood.

[*Comment*: Where maps for the National Flood Insurance Program produced by the Federal Insurance Administration (FIA) of the Federal Emergency Management Agency are available, they will normally be determinative of whether a facility is located within or outside of the 100-year floodplain. However, where the FIA map excludes an area (usually areas of the floodplain less than 200 feet in width), these areas must be considered and a determination made as to whether they are in the 100-year floodplain. Where FIA maps are not available for a proposed facility location, the owner or operator must use equivalent mapping techniques to determine whether the facility is within the 100-year floodplain, and if so located, what the 100-year flood elevation would be.]

(iv) Owners and operators of facilities located in the 100-year floodplain must provide the following information:

(A) Engineering analysis to indicate the various hydrodynamic and hydrostatic forces expected to result at the site as consequence of a 100-year flood.

(B) Structural or other engineering studies showing the design of operational units (e.g., tanks, incinerators) and flood protection devices (e.g., floodwalls, dikes) at the facility and how these will prevent washout.

(C) If applicable, and in lieu of paragraphs (b)(11)(iv) (A) and (B) of this section, a detailed description of procedures to be followed to remove hazardous waste to safety before the facility is flooded, including:

(*1*) Timing of such movement relative to flood levels, including estimated time to move the waste, to show that such movement can be completed before floodwaters reach the facility.

(*2*) A description of the location(s) to which the waste will be moved and demonstration that those facilities will be eligible to receive hazardous waste in accordance with the regulations under Parts 270, 271, 124, and 264 through 266 of this chapter.

(*3*) The planned procedures, equipment, and personnel to be used and the means to ensure that such resources will be available in time for use.

(*4*) The potential for accidental discharges of the waste during movement.

(v) Existing facilities NOT in compliance with § 264.18(b) shall provide a plan showing how the facility will be brought into compliance and a schedule for compliance.

(12) An outline of both the introductory and continuing training programs by owners or operators to prepare persons to operate or maintain the HWM facility in a safe manner as required to demonstrate compliance with § 264.16. A brief description of how training will be designed to meet actual job tasks in accordance with requirements in § 264.16(a)(3).

(13) A copy of the closure plan and, where applicable, the post-closure plan required by §§ 264.112 and 264.118. Include, where applicable, as part of the plans, specific requirements in §§ 264.178, 264.197, 264.228, 264.258, 264.280, 264.310, 264.351, 264.601, and 264.603.

(14) For hazardous waste disposal units that have been closed, documentation that notices required under § 264.119 have been filed.

(15) The most recent closure cost estimate for the facility prepared in accordance with § 264.142 and a copy of the documentation required to demonstrate financial assurance under § 264.143. For a new facility, a copy of the required documentation may be submitted 60 days prior to the initial receipt of hazardous wastes, if that is later than the submission of the Part B.

(16) Where applicable, the most recent post-closure cost estimate for the facility prepared in accordance with § 264.144 plus a copy of the documentation required to demonstrate financial assurance under § 264.145. For a new facility, a copy of the required documentation may be submitted 60 days prior to the initial receipt of hazardous wastes, if that is later than the submission of the Part B.

(17) Where applicable, a copy of the insurance policy or other documentation which comprises compliance with the requirements of § 264.147. For a new facility, documentation showing the amount of insurance meeting the specification of § 264.147(a) and, if applicable, § 264.147(b), that the owner or operator plans to have in effect before initial receipt of hazardous waste for treatment, storage, or disposal. A request for a variance in the amount of required coverage, for a new or existing facility, may be submitted as specified in § 264.147(c).

(18) Where appropriate, proof of coverage by a State financial mechanism in compliance with § 264.149 or § 264.150.

(19) A topographic map showing a distance of 1000 feet around the facility at a scale of 2.5 centimeters (1 inch) equal to not more than 61.0 meters (200 feet). Contours must be shown on the map. The contour interval must be sufficient to clearly show the pattern of surface water flow in the vicinity of and from each operational unit of the facility. For example, contours with an interval of 1.5 meters (5 feet), if relief is greater than 6.1 meters (20 feet), or an interval of 0.6 meters (2 feet), if relief is less than 6.1 meters (20 feet). Owners and operators of HWM facilities located in mountainous areas should use large contour intervals to adequately show topographic profiles of facilities. The map shall clearly show the following:

(i) Map scale and date.

(ii) 100-year floodplain area.

further information is required to demonstrate compliance with § 264.18(a).]

(ii) If the facility is proposed to be located in an area listed in Appendix VI of Part 264, the owner or operator shall demonstrate compliance with the seismic standard. This demonstration may be made using either published geologic data or data obtained from field investigations carried out by the applicant. The information provided must be of such quality to be acceptable to geologists experienced in identifying and evaluating seismic activity. The information submitted must show that either:

(A) No faults which have had displacement in Holocene time are present, or no lineations which suggest the presence of a fault (which have displacement in Holocene time) within 3,000 feet of a facility are present, based on data from:

(*1*) Published geologic studies,

(*2*) Aerial reconnaissance of the area within a five-mile radius from the facility.

(*3*) An analysis of aerial photographs covering a 3,000 foot radius of the facility, and

(*4*) If needed to clarify the above data, a reconnaissance based on walking portions of the area within 3,000 feet of the facility, or

(B) If faults (to include lineations) which have had displacement in Holocene time are present within 3,000 feet of a facility, no faults pass with 200 feet of the portions of the facility where treatment, storage, or disposal of hazardous waste will be conducted, based on data from a comprehensive geologic analysis of the site. Unless a site analysis is otherwise conclusive concerning the absence of faults within 200 feet of such portions of the facility data shall be obtained from a subsurface exploration (trenching) of the area within a distance no less than 200 feet from portions of the facility where treatment, storage, or disposal of hazardous waste will be conducted. Such trenching shall be performed in a direction that is perpendicular to known faults (which have had displacement in Holocene time) passing within 3,000 feet of the portions of the facility where treatment, storage, or disposal of hazardous waste will be conducted. Such investigation shall document with supporting maps and other analyses, the location of faults found.

[*Comment*: The Guidance Manual for the Location Standards provides greater detail on the content of each type of seismic investigation and the appropriate conditions under which each approach or a combination of approaches would be used.]

(iii) Owners and operators of all facilities shall provide an identification of whether the facility is located within a 100-year floodplain. This identification must indicate the source of data for such determination and include a copy of the relevant Federal Insurance Administration (FIA) flood map, if used, or the calculations and maps used where an FIA map is not available. Information shall also be provided identifying the 100-year flood level and any other special flooding factors (e.g., wave action) which must be considered in designing, constructing, operating, or maintaining the facility to withstand washout from a 100-year flood.

[*Comment*: Where maps for the National Flood Insurance Program produced by the Federal Insurance Administration (FIA) of the Federal Emergency Management Agency are available, they will normally be determinative of whether a facility is located within or outside of the 100-year floodplain. However, where the FIA map excludes an area (usually areas of the floodplain less than 200 feet in width), these areas must be considered and a determination made as to whether they are in the 100-year floodplain. Where FIA maps are not available for a proposed facility location, the owner or operator must use equivalent mapping techniques to determine whether the facility is within the 100-year floodplain, and if so located, what the 100-year flood elevation would be.]

(iv) Owners and operators of facilities located in the 100-year floodplain must provide the following information:

(A) Engineering analysis to indicate the various hydrodynamic and hydrostatic forces expected to result at the site as consequence of a 100-year flood.

(B) Structural or other engineering studies showing the design of operational units (e.g., tanks, incinerators) and flood protection devices (e.g., floodwalls, dikes) at the facility and how these will prevent washout.

(C) If applicable, and in lieu of paragraphs (b)(11)(iv) (A) and (B) of this section, a detailed description of procedures to be followed to remove hazardous waste to safety before the facility is flooded, including:

(*1*) Timing of such movement relative to flood levels, including estimated time to move the waste, to show that such movement can be completed before floodwaters reach the facility.

(*2*) A description of the location(s) to which the waste will be moved and demonstration that those facilities will be eligible to receive hazardous waste in accordance with the regulations under Parts 270, 271, 124, and 264 through 266 of this chapter.

(*3*) The planned procedures, equipment, and personnel to be used and the means to ensure that such resources will be available in time for use.

(*4*) The potential for accidental discharges of the waste during movement.

(v) Existing facilities NOT in compliance with § 264.18(b) shall provide a plan showing how the facility will be brought into compliance and a schedule for compliance.

(12) An outline of both the introductory and continuing training programs by owners or operators to prepare persons to operate or maintain the HWM facility in a safe manner as required to demonstrate compliance with § 264.16. A brief description of how training will be designed to meet actual job tasks in accordance with requirements in § 264.16(a)(3).

(13) A copy of the closure plan and, where applicable, the post-closure plan required by §§ 264.112 and 264.118. Include, where applicable, as part of the plans, specific requirements in §§ 264.178, 264.197, 264.228, 264.258, 264.280, 264.310, 264.351, 264.601, and 264.603.

(14) For hazardous waste disposal units that have been closed, documentation that notices required under § 264.119 have been filed.

(15) The most recent closure cost estimate for the facility prepared in accordance with § 264.142 and a copy of the documentation required to demonstrate financial assurance under § 264.143. For a new facility, a copy of the required documentation may be submitted 60 days prior to the initial receipt of hazardous wastes, if that is later than the submission of the Part B.

(16) Where applicable, the most recent post-closure cost estimate for the facility prepared in accordance with § 264.144 plus a copy of the documentation required to demonstrate financial assurance under § 264.145. For a new facility, a copy of the required documentation may be submitted 60 days prior to the initial receipt of hazardous wastes, if that is later than the submission of the Part B.

(17) Where applicable, a copy of the insurance policy or other documentation which comprises compliance with the requirements of § 264.147. For a new facility, documentation showing the amount of insurance meeting the specification of § 264.147(a) and, if applicable, § 264.147(b), that the owner or operator plans to have in effect before initial receipt of hazardous waste for treatment, storage, or disposal. A request for a variance in the amount of required coverage, for a new or existing facility, may be submitted as specified in § 264.147(c).

(18) Where appropriate, proof of coverage by a State financial mechanism in compliance with § 264.149 or § 264.150.

(19) A topographic map showing a distance of 1000 feet around the facility at a scale of 2.5 centimeters (1 inch) equal to not more than 61.0 meters (200 feet). Contours must be shown on the map. The contour interval must be sufficient to clearly show the pattern of surface water flow in the vicinity of and from each operational unit of the facility. For example, contours with an interval of 1.5 meters (5 feet), if relief is greater than 6.1 meters (20 feet), or an interval of 0.6 meters (2 feet), if relief is less than 6.1 meters (20 feet). Owners and operators of HWM facilities located in mountainous areas should use large contour intervals to adequately show topographic profiles of facilities. The map shall clearly show the following:

(i) Map scale and date.

(ii) 100-year floodplain area.

(4) The applicant's or permittee's decision to cease conducting regulated activities shall be evidenced by a firm public commitment satisfactory to the Director, such as resolution of the board of directors of a corporation.

[48 FR 14228, Apr. 1, 1983, as amended at 48 FR 30114, June 30, 1983]

Subpart D—Changes to Permit

§ 270.40 Transfer of permits.

Transfers by modification. A permit may be transferred by the permittee to a new owner or operator only if the permit has been modified or revoked and reissued (under § 270.41(b)(2)), or a minor modification made (under § 270.42(d)), to identify the new permittee and incorporate such other requirements as may be necessary under the appropriate Act.

§ 270.41 Major modification or revocation and reissuance of permits.

When the Director receives any information (for example, inspects the facility, receives information submitted by the permittee as required in the permit (see § 270.30)), receives a request for modification or revocation and reissuance under § 124.5, or conducts a review of the permit file) he or she may determine whether or not one or more of the causes listed in paragraphs (a) and (b) of this section for modification, or revocation and reissuance or both exist. If cause exists, the Director may modify or revoke and reissue the permit accordingly, subject to the limitations of paragraphs (c) of this section, and may request an updated application if necessary. When a permit is modified, only the conditions subject to modification are reopened. If a permit is revoked and reissued, the entire permit is reopened and subject to revision and the permit is reissued for a new term. See 40 CFR 124.5(c)(2). If cause does not exist under this section or 40 CFR 270.42, the Director shall not modify or revoke and reissue the permit. If a permit modification satisfies the criteria in 40 CFR 270.42 for a minor modification, the permit may be modified without a draft permit or public re[illegible] Otherwise, a draft permit must be prepared and other procedures in Part 124 (or procedures of an approved State program) followed.

(a) *Causes for modification.* The following are causes for modification, but not revocation and reissuance, of permits; the following may be causes for revocation and reissuance, as well as modification, when the permittee requests or agrees.

(1) *Alterations.* There are material and substantial alterations or additions to the permitted facility or activity which occurred after permit issuance which justify the application of permit conditions that are different or absent in the existing permit.

(2) *Information.* The Director has received information. Permits may be modified during their terms for this cause only if the information was not available at the time of permit issuance (other than revised regulations, guidance, or test methods) and would have justified the application of different permit conditions at the time of issuance.

(3) *New statutory requirements or regulations.* The standards or regulations on which the permit was based have been changed by statute, through promulgation of new or amended standards or regulations, or by judicial decision after the permit was issued. Permits may be modified during their terms for this cause as follows:

(i) Director may modify the permit when the standards or regulations on which the permit was based have been changed by statute or amended standards or regulations.

(ii) Permittee may request modification when:

(A) The permit condition to be modified was based on a promulgated regulation under Parts 124 of this chapter, Parts 260—268 of this chapter, or Part 270 of this chapter; and

(B) EPA has revised, withdrawn, or modified that portion of the regulation on which the permit condition was based; or

(C) A permittee requests modification in accordance with § 124.5 of this chapter within 90 days after FEDERAL REGISTER notice of the action on which the request is based.

(iii) For judicial decisions, a court of competent jurisdiction has remanded and stayed EPA-promulgated regulations if the remand and stay concern that portion of the regulations on which the permit condition was based or if a request is filed by the permittee in accordance with § 124.5 of this chapter within 90 days of judicial remand.

(4) *Compliance schedules.* The Director determines good cause exists for modification of a compliance schedule, such as an act of God, strike, flood, or materials shortage or other events over which the permittee has little or no control and for which there is no reasonably available remedy.

(5) The Director may also modify a permit:

(i) When modification of a closure plan is required under § 264.112(b) or § 264.118(b).

(ii) After the Director receives the notification of expected closure under § 264.113, when the Director determines that extension of the 90 to 180 day periods under § 264.113, modification of the 30-year post-closure period under § 264.117(a), continuation of security requirements under § 264.117(b), or permission to disturb the integrity of the containment system under § 264.117(c) are unwarranted.

(iii) When the permittee has filed a request under § 264.147(c) for a variance to the level of financial responsibility or when the Director demonstrates under § 264.147(d) that an upward adjustment of the level of financial responsibility is required.

(iv) When the corrective action program specified in the permit under § 264.100 has not brought the regulated unit into compliance with the ground-water protection standard within a reasonable period of time.

(v) To include a detection monitoring program meeting the requirements of § 264.98, when the owner or operator has been conducting a compliance monitoring program under § 264.99 or a corrective action program under § 264.100 and compliance period ends before the end of the post-closure care period for the unit.

(vi) When a permit requires a compliance monitoring program under § 264.99, but monitoring data collected prior to permit issuance indicate that the facility is exceeding the ground-water protection standard.

(vii) To include conditions applicable to units at a facility that were not previously included in the facility's permit.

(viii) When a land treatment unit is not achieving complete treatment of hazardous constituents under its current permit conditions.

(6) Notwithstanding any other provision in this section, when a permit for a land disposal facility is reviewed by the Director under § 270.50(d), the Director shall modify the permit as necessary to assure that the facility continues to comply with the currently applicable requirements in Parts 124, 260 through 266, and 270.

(b) *Causes for modification or revocation and reissuance.* The following are causes to modify or, alternatively, revoke and reissue a permit:

(1) Cause exists for terminations under § 270.43, and the Director determines that modification or revocation and reissuance is appropriate.

(2) The Director has received notification (as required in the permit, see § 270.30(l)(3)) of a proposed transfer of the permit.

(c) *Facility siting.* Suitability of the facility location will not be considered at the time of permit modification or revocation and reissuance unless new information or standards indicate that a threat to human health or the environmental exists which was unknown at the time of permit issuance.

[48 FR 14228, Apr. 1, 1983, as amended at 48 FR 30114, June 30, 1983; 50 FR 28752, July 15, 1985; 52 FR 45799, Dec. 1, 1987]

§ 270.42 Minor modifications of permits.

Upon the consent of the permittee, the Director may modify a permit to make the corrections or allowances for changes in the permitted activity listed in this section, without following the procedures of Part 124. Any permit modification not processed as a minor modification under this section must be made for cause and with Part 124 draft permit and public notice as required in § 270.41. Minor modifications may only:

(4) The applicant's or permittee's decision to cease conducting regulated activities shall be evidenced by a firm public commitment satisfactory to the Director, such as resolution of the board of directors of a corporation.

[48 FR 14228, Apr. 1, 1983, as amended at 48 FR 30114, June 30, 1983]

Subpart D—Changes to Permit

§ 270.40 Transfer of permits.

Transfers by modification. A permit may be transferred by the permittee to a new owner or operator only if the permit has been modified or revoked and reissued (under § 270.41(b)(2)), or a minor modification made (under § 270.42(d)), to identify the new permittee and incorporate such other requirements as may be necessary under the appropriate Act.

§ 270.41 Major modification or revocation and reissuance of permits.

When the Director receives any information (for example, inspects the facility, receives information submitted by the permittee as required in the permit (see § 270.30)), receives a request for modification or revocation and reissuance under § 124.5, or conducts a review of the permit file) he or she may determine whether or not one or more of the causes listed in paragraphs (a) and (b) of this section for modification, or revocation and reissuance or both exist. If cause exists, the Director may modify or revoke and reissue the permit accordingly, subject to the limitations of paragraphs (c) of this section, and may request an updated application if necessary. When a permit is modified, only the conditions subject to modification are reopened. If a permit is revoked and reissued, the entire permit is reopened and subject to revision and the permit is reissued for a new term. See 40 CFR 124.5(c)(2). If cause does not exist under this section or 40 CFR 270.42, the Director shall not modify or revoke and reissue the permit. If a permit modification satisfies the criteria in 40 CFR 270.42 for a minor modification, the permit may be modified without a draft permit or public re[illegible] Otherwise, a draft permit must be prepared and other procedures in Part 124 (or procedures of an approved State program) followed.

(a) *Causes for modification.* The following are causes for modification, but not revocation and reissuance, of permits; the following may be causes for revocation and reissuance, as well as modification, when the permittee requests or agrees.

(1) *Alterations.* There are material and substantial alterations or additions to the permitted facility or activity which occurred after permit issuance which justify the application of permit conditions that are different or absent in the existing permit.

(2) *Information.* The Director has received information. Permits may be modified during their terms for this cause only if the information was not available at the time of permit issuance (other than revised regulations, guidance, or test methods) and would have justified the application of different permit conditions at the time of issuance.

(3) *New statutory requirements or regulations.* The standards or regulations on which the permit was based have been changed by statute, through promulgation of new or amended standards or regulations, or by judicial decision after the permit was issued. Permits may be modified during their terms for this cause as follows:

(i) Director may modify the permit when the standards or regulations on which the permit was based have been changed by statute or amended standards or regulations.

(ii) Permittee may request modification when:

(A) The permit condition to be modified was based on a promulgated regulation under Parts 124 of this chapter, Parts 260—268 of this chapter, or Part 270 of this chapter; and

(B) EPA has revised, withdrawn, or modified that portion of the regulation on which the permit condition was based; or

(C) A permittee requests modification in accordance with § 124.5 of this chapter within 90 days after FEDERAL REGISTER notice of the action on which the request is based.

(iii) For judicial decisions, a court of competent jurisdiction has remanded and stayed EPA-promulgated regulations if the remand and stay concern that portion of the regulations on which the permit condition was based or if a request is filed by the permittee in accordance with § 124.5 of this chapter within 90 days of judicial remand.

(4) *Compliance schedules.* The Director determines good cause exists for modification of a compliance schedule, such as an act of God, strike, flood, or materials shortage or other events over which the permittee has little or no control and for which there is no reasonably available remedy.

(5) The Director may also modify a permit:

(i) When modification of a closure plan is required under § 264.112(b) or § 264.118(b).

(ii) After the Director receives the notification of expected closure under § 264.113, when the Director determines that extension of the 90 to 180 day periods under § 264.113, modification of the 30-year post-closure period under § 264.117(a), continuation of security requirements under § 264.117(b), or permission to disturb the integrity of the containment system under § 264.117(c) are unwarranted.

(iii) When the permittee has filed a request under § 264.147(c) for a variance to the level of financial responsibility or when the Director demonstrates under § 264.147(d) that an upward adjustment of the level of financial responsibility is required.

(iv) When the corrective action program specified in the permit under § 264.100 has not brought the regulated unit into compliance with the ground-water protection standard within a reasonable period of time.

(v) To include a detection monitoring program meeting the requirements of § 264.98, when the owner or operator has been conducting a compliance monitoring program under § 264.99 or a corrective action program under § 264.100 and compliance period ends before the end of the post-closure care period for the unit.

(vi) When a permit requires a compliance monitoring program under § 264.99, but monitoring data collected prior to permit issuance indicate that the facility is exceeding the groundwater protection standard.

(vii) To include conditions applicable to units at a facility that were not previously included in the facility's permit.

(viii) When a land treatment unit is not achieving complete treatment of hazardous constituents under its current permit conditions.

(6) Notwithstanding any other provision in this section, when a permit for a land disposal facility is reviewed by the Director under § 270.50(d), the Director shall modify the permit as necessary to assure that the facility continues to comply with the currently applicable requirements in Parts 124, 260 through 266, and 270.

(b) *Causes for modification or revocation and reissuance.* The following are causes to modify or, alternatively, revoke and reissue a permit:

(1) Cause exists for termination under § 270.43, and the Director determines that modification or revocation and reissuance is appropriate.

(2) The Director has received notification (as required in the permit, see § 270.30(l)(3)) of a proposed transfer of the permit.

(c) *Facility siting.* Suitability of the facility location will not be considered at the time of permit modification or revocation and reissuance unless new information or standards indicate that a threat to human health or the environmental exists which was unknown at the time of permit issuance.

[48 FR 14228, Apr. 1, 1983, as amended at 48 FR 30114, June 30, 1983; 50 FR 28752, July 15, 1985; 52 FR 45799, Dec. 1, 1987]

§ 270.42 Minor modifications of permits.

Upon the consent of the permittee, the Director may modify a permit to make the corrections or allowances for changes in the permitted activity listed in this section, without following the procedures of Part 124. Any permit modification not processed as a minor modification under this section must be made for cause and with Part 124 draft permit and public notice as required in § 270.41. Minor modifications may only:

(2) Issue a notice of intent to deny the new permit under § 124.6. If the permit is denied, the owner or operator would then be required to cease the activities authorized by the continued permit or be subject to enforcement action for operating without a permit;

(3) Issue a new permit under Part 124 with appropriate conditions; or

(4) Take other actions authorized by these regulations.

(d) *State continuation.* In a State with an hazardous waste program authorized under 40 CFR Part 271, if a permittee has submitted a timely and complete application under applicable State law and regulations, the terms and conditions of an EPA-issued RCRA permit continue in force beyond the expiration date of the permit, but only until the effective date of the State's issuance or denial of a State RCRA permit.

(Clean Water Act (33 U.S.C. 1251 et seq.), Safe Drinking Water Act (42 U.S.C. 300f et seq.), Clean Air Act (42 U.S.C. 7401 et seq.), Resource Conservation and Recovery Act (42 U.S.C. 6901 et seq.))

[48 FR 14228, Apr. 1, 1983, as amended at 48 FR 39622, Sept. 1, 1983]

Subpart F—Special Forms of Permits

§ 270.60 Permits by rule.

Notwithstanding any other provision of this part or Part 124, the following shall be deemed to have a RCRA permit if the conditions listed are met:

(a) *Ocean disposal barges or vessels.* The owner or operator of a barge or other vessel which accepts hazardous waste for ocean disposal, if the owner or operator:

(1) Has a permit for ocean dumping issued under 40 CFR Part 220 (Ocean Dumping, authorized by the Marine Protection, Research, and Sanctuaries Act, as amended, 33 U.S.C. 1420 *et seq.*);

(2) Complies with the conditions of that permit; and

(3) Complies with the following hazardous waste regulations:

(i) 40 CFR 264.11, Identification number;

(ii) 40 CFR 264.71, Use of manifest system;

(iii) 40 CFR 264.72, Manifest discrepancies;

(iv) 40 CFR 264.73(a) and (b)(1), Operating record;

(v) 40 CFR 264.75, Biennial report; and

(vi) 40 CFR 264.76, Unmanifested waste report.

(b) *Injection wells.* The owner or operator of an injection well disposing of hazardous waste, if the owner or operator:

(1) Has a permit for underground injection issued under Part 144 or 145; and

(2) Complies with the conditions of that permit and the requirements of § 144.14 (requirements for wells managing hazardous waste).

(3) For UIC permits issued after November 8, 1984:

(i) Complies with 40 CFR 264.101; and

(ii) Where the UIC well is the only unit at a facility which requires a RCRA permit, complies with 40 CFR 270.14(d).

(c) *Publicly owned treatment works.* The owner or operator of a POTW which accepts for treatment hazardous waste, if the owner or operator:

(1) Has an NPDES permit;

(2) Complies with the conditions of that permit; and

(3) Complies with the following regulations:

(i) 40 CFR 264.11, Identification number;

(ii) 40 CFR 264.71, Use of manifest system;

(iii) 40 CFR 264.72, Manifest discrepancies;

(iv) 40 CFR 264.73(a) and (b)(1), Operating record;

(v) 40 CFR 264.75, Biennial report;

(vi) 40 CFR 264.76, Unmanifested waste report; and

(vii) For NPDES permits issued after November 8, 1984, 40 CFR 264.101.

(4) If the waste meets all Federal, State, and local pretreatment requirements which would be applicable to the waste if it were being discharged into the POTW through a sewer, pipe, or similar conveyance.

(Approved by the Office of Management and Budget under control number 2050-0007)

[48 FR 14228, Apr. 1, 1983, as amended at 50 FR 28752, July 15, 1985; 52 FR 45799, Dec. 1, 1987]

§ 270.61 Emergency permits.

(a) Notwithstanding any other provision of this part or Part 124, in the event the Director finds an imminent and substantial endangerment to human health or the environment the Director may issue a temporary emergency permit: (1) To a non-permitted facility to allow treatment, storage, or disposal of hazardous waste or (2) to a permitted facility to allow treatment, storage, or disposal of a hazardous waste not covered by an effective permit.

(b) This emergency permit:

(1) May be oral or written. If oral, it shall be followed in five days by a written emergency permit;

(2) Shall not exceed 90 days in duration;

(3) Shall clearly specify the hazardous wastes to be received, and the manner and location of their treatment, storage, or disposal;

(4) May be terminated by the Director at any time without process if he or she determines that termination is appropriate to protect human health and the environment;

(5) Shall be accompanied by a public notice published under § 124.11(b) including:

(i) Name and address of the office granting the emergency authorization;

(ii) Name and location of the permitted HWM facility;

(iii) A brief description of the wastes involved;

(iv) A brief description of the action authorized and reasons for authorizing it; and

(v) Duration of the emergency permit; and

(6) Shall incorporate, to the extent possible and not inconsistent with the emergency situation, all applicable requirements of this part and 40 CFR Parts 264 and 266.

[48 FR 14228, Apr. 1, 1983, as amended at 48 FR 30114, June 30, 1983]

§ 270.62 Hazardous waste incinerator permits.

(a) For the purposes of determining operational readiness following completion of physical construction the Director must establish permit conditions, including but not limited to allowable waste feeds and operating conditions, in the permit to a new hazardous waste incinerator. These permit conditions will be effective for the minimum time required to bring the incinerator to a point of operational readiness to conduct a trial burn, not to exceed 720 hours operating time for treatment of hazardous waste. The Director may extend the duration of this operational period once, for up to 720 additional hours, at the request of the applicant when good cause is shown. The permit may be modified to reflect the extension according to § 270.42 (Minor modifications of permits) of this chapter.

(1) Applicants must submit a statement, with Part B of the permit application, which suggests the conditions necessary to operate in compliance with the performance standards of § 264.343 of this chapter during this period. This statement should include, at a minimum, restrictions on waste constituents, waste feed rates and the operating parameters identified in § 264.345 of this chapter.

(2) The Director will review this statement and any other relevant information submitted with Part B of the permit application and specify requirements for this period sufficient to meet the performance standards of § 264.343 of this chapter based on his engineering judgment.

(b) For the purposes of determining feasibility of compliance with the performance standards of § 264.343 of this chapter and of determining adequate operating conditions under § 264.345 of this chapter, the Director must establish conditions in the permit for a new hazardous waste incinerator to be effective during the trial burn.

(1) Applicants must propose a trial burn plan, prepared under paragraph (b)(2) of this section with a Part B of the permit application.

(2) The trial burn plan must include the following information:

(i) An analysis of each waste or mixture of wastes to be burned which includes:

(2) Issue a notice of intent to deny the new permit under § 124.6. If the permit is denied, the owner or operator would then be required to cease the activities authorized by the continued permit or be subject to enforcement action for operating without a permit;

(3) Issue a new permit under Part 124 with appropriate conditions; or

(4) Take other actions authorized by these regulations.

(d) *State continuation.* In a State with an hazardous waste program authorized under 40 CFR Part 271, if a permittee has submitted a timely and complete application under applicable State law and regulations, the terms and conditions of an EPA-issued RCRA permit continue in force beyond the expiration date of the permit, but only until the effective date of the State's issuance or denial of a State RCRA permit.

(Clean Water Act (33 U.S.C. 1251 et seq.), Safe Drinking Water Act (42 U.S.C. 300f et seq.), Clean Air Act (42 U.S.C. 7401 et seq.), Resource Conservation and Recovery Act (42 U.S.C. 6901 et seq.))

[48 FR 14228, Apr. 1, 1983, as amended at 48 FR 39622, Sept. 1, 1983]

Subpart F—Special Forms of Permits

§ 270.60 Permits by rule.

Notwithstanding any other provision of this part or Part 124, the following shall be deemed to have a RCRA permit if the conditions listed are met:

(a) *Ocean disposal barges or vessels.* The owner or operator of a barge or other vessel which accepts hazardous waste for ocean disposal, if the owner or operator:

(1) Has a permit for ocean dumping issued under 40 CFR Part 220 (Ocean Dumping, authorized by the Marine Protection, Research, and Sanctuaries Act, as amended, 33 U.S.C. 1420 *et seq.*);

(2) Complies with the conditions of that permit; and

(3) Complies with the following hazardous waste regulations:

(i) 40 CFR 264.11, Identification number;

(ii) 40 CFR 264.71, Use of manifest system;

(iii) 40 CFR 264.72, Manifest discrepancies;

(iv) 40 CFR 264.73(a) and (b)(1), Operating record;

(v) 40 CFR 264.75, Biennial report; and

(vi) 40 CFR 264.76, Unmanifested waste report.

(b) *Injection wells.* The owner or operator of an injection well disposing of hazardous waste, if the owner or operator:

(1) Has a permit for underground injection issued under Part 144 or 145; and

(2) Complies with the conditions of that permit and the requirements of § 144.14 (requirements for wells managing hazardous waste).

(3) For UIC permits issued after November 8, 1984:

(i) Complies with 40 CFR 264.101; and

(ii) Where the UIC well is the only unit at a facility which requires a RCRA permit, complies with 40 CFR 270.14(d).

(c) *Publicly owned treatment works.* The owner or operator of a POTW which accepts for treatment hazardous waste, if the owner or operator:

(1) Has an NPDES permit;

(2) Complies with the conditions of that permit; and

(3) Complies with the following regulations:

(i) 40 CFR 264.11, Identification number;

(ii) 40 CFR 264.71, Use of manifest system;

(iii) 40 CFR 264.72, Manifest discrepancies;

(iv) 40 CFR 264.73(a) and (b)(1), Operating record;

(v) 40 CFR 264.75, Biennial report;

(vi) 40 CFR 264.76, Unmanifested waste report; and

(vii) For NPDES permits issued after November 8, 1984, 40 CFR 264.101.

(4) If the waste meets all Federal, State, and local pretreatment requirements which would be applicable to the waste if it were being discharged into the POTW through a sewer, pipe, or similar conveyance.

(Approved by the Office of Management and Budget under control number 2050-0007)

[48 FR 14228, Apr. 1, 1983, as amended at 50 FR 28752, July 15, 1985; 52 FR 45799, Dec. 1, 1987]

§ 270.61 Emergency permits.

(a) Notwithstanding any other provision of this part or Part 124, in the event the Director finds an imminent and substantial endangerment to human health or the environment the Director may issue a temporary emergency permit: (1) To a non-permitted facility to allow treatment, storage, or disposal of hazardous waste or (2) to a permitted facility to allow treatment, storage, or disposal of a hazardous waste not covered by an effective permit.

(b) This emergency permit:

(1) May be oral or written. If oral, it shall be followed in five days by a written emergency permit;

(2) Shall not exceed 90 days in duration;

(3) Shall clearly specify the hazardous wastes to be received, and the manner and location of their treatment, storage, or disposal;

(4) May be terminated by the Director at any time without process if he or she determines that termination is appropriate to protect human health and the environment;

(5) Shall be accompanied by a public notice published under § 124.11(b) including:

(i) Name and address of the office granting the emergency authorization;

(ii) Name and location of the permitted HWM facility;

(iii) A brief description of the wastes involved;

(iv) A brief description of the action authorized and reasons for authorizing it; and

(v) Duration of the emergency permit; and

(6) Shall incorporate, to the extent possible and not inconsistent with the emergency situation, all applicable requirements of this part and 40 CFR Parts 264 and 266.

[48 FR 14228, Apr. 1, 1983, as amended at 48 FR 30114, June 30, 1983]

§ 270.62 Hazardous waste incinerator permits.

(a) For the purposes of determining operational readiness following completion of physical construction, the Director must establish permit conditions, including but not limited to allowable waste feeds and operating conditions, in the permit to a new hazardous waste incinerator. These permit conditions will be effective for the minimum time required to bring the incinerator to a point of operational readiness to conduct a trial burn, not to exceed 720 hours operating time for treatment of hazardous waste. The Director may extend the duration of this operational period once, for up to 720 additional hours, at the request of the applicant when good cause is shown. The permit may be modified to reflect the extension according to § 270.42 (Minor modifications of permits) of this chapter.

(1) Applicants must submit a statement, with Part B of the permit application, which suggests the conditions necessary to operate in compliance with the performance standards of § 264.343 of this chapter during this period. This statement should include, at a minimum, restrictions on waste constituents, waste feed rates and the operating parameters identified in § 264.345 of this chapter.

(2) The Director will review this statement and any other relevant information submitted with Part B of the permit application and specify requirements for this period sufficient to meet the performance standards of § 264.343 of this chapter based on his engineering judgment.

(b) For the purposes of determining feasibility of compliance with the performance standards of § 264.343 of this chapter and of determining adequate operating conditions under § 264.345 of this chapter, the Director must establish conditions in the permit for a new hazardous waste incinerator to be effective during the trial burn.

(1) Applicants must propose a trial burn plan, prepared under paragraph (b)(2) of this section with a Part B of the permit application.

(2) The trial burn plan must include the following information:

(i) An analysis of each waste or mixture of wastes to be burned which includes:

(2) The Director will review this statement and any other relevant information submitted with Part B of the permit application and specify those requirements for this period most likely to meet the performance standards of § 264.343 of this chapter, based on his engineering judgment.

(d) For the purposes of determining feasibility of compliance with the performance standards of § 264.343 of this chapter and of determining adequate operating conditions under § 264.345 of this chapter, the applicant for a permit to an existing hazardous waste incinerator may prepare and submit a trial burn plan and perform a trial burn in accordance with paragraphs (b)(2) through (9) of this section. Applicants who submit trial burn plans and receive approval before submission of a permit application must complete the trial burn and submit the results, specified in paragraph (b)(6), with Part B of the permit application. If completion of this process conflicts with the date set for submission of the Part B application, the applicant must contact the Director to establish a later date for submission of the Part B application or the trial burn results. If the applicant submits a trial burn plan with Part B of the permit application, the trial burn must be conducted and the results submitted within a time period to be specified by the Director.

§ 270.63 Permits for land treatment demonstrations using field test or laboratory analyses.

(a) For the purpose of allowing an owner or operator to meet the treatment demonstration requirements of § 264.272 of this chapter, the Director may issue a treatment demonstration permit. The permit must contain only those requirements necessary to meet the standards in § 264.272(c). The permit may be issued either as a treatment or disposal permit covering only the field test or laboratory analyses, or as a two-phase facility permit covering the field tests, or laboratory analyses, and design, construction operation and maintenance of the land treatment unit.

(1) The Director may issue a two-pha facility permit if he finds that, ba on information submitted in Part B of the application, substantial, although incomplete or inconclusive, information already exists upon which to base the issuance of a facility permit.

(2) If the Director finds that not enough information exists upon which he can establish permit conditions to attempt to provide for compliance with all of the requirements of Subpart M, he must issue a treatment demonstration permit covering only the field test or laboratory analyses.

(b) If the Director finds that a phased permit may be issued, he will establish, as requirements in the first phase of the facility permit, conditions for conducting the field tests or laboratory analyses. These permit conditions will include design and operating parameters (including the duration of the tests or analyses and, in the case of field tests, the horizontal and vertical dimensions of the treatment zone), monitoring procedures, post-demonstration clean-up activities, and any other conditions which the Director finds may be necessary under § 264.272(c). The Director will include conditions in the second phase of the facility permit to attempt to meet all Subpart M requirements pertaining to unit design, construction, operation, and maintenance. The Director will establish these conditions in the second phase of the permit based upon the substantial but incomplete or inconclusive information contained in the Part B application.

(1) The first phase of the permit will be effective as provided in § 124.15(b) of this chapter.

(2) The second phase of the permit will be effective as provided in paragraph (d) of this section.

(c) When the owner or operator who has been issued a two-phase permit has completed the treatment demonstration, he must submit to the Director a certification, signed by a person authorized to sign a permit application or report under § 270.11, that the field tests or laboratory analyses have been carried out in accordance with the conditions specified in phase one of the permit for conducting such tests or analyses. The owner or operator must also submit all data colle during the field tests or labora

analyses within 90 days of completion of those tests or analyses unless the Director approves a later date.

(d) If the Director determines that the results of the field tests or laboratory analyses meet the requirements of § 264.272 of this chapter, he will modify the second phase of the permit to incorporate any requirements necessary for operation of the facility in compliance with Part 264, Subpart M, of this chapter, based upon the results of the field tests or laboratory analyses.

(1) This permit modification may proceed as a minor modification under § 270.42, provided any such change is minor, or otherwise will proceed as a modification under § 270.41(a)(2).

(2) If no modifications of the second phase of the permit are necessary, or if only minor modifications are necessary and have been made, the Director will give notice of his final decision to the permit applicant and to each person who submitted written comments on the phased permit or who requested notice of the final decision on the second phase of the permit. The second phase of the permit then will become effective as specified in § 124.15(b).

(3) If modifications under § 270.41(a)(2) are necessary, the second phase of the permit will become effective only after those modifications have been made.

§ 270.64 Interim permits for UIC wells.

The Director may issue a permit under this part to any Class I UIC well (see § 144.6) injecting hazardous wastes within a State in which no UIC program has been approved or promulgated. Any such permit shall apply and insure compliance with all applicable requirements of 40 CFR Part 264, Subpart R (RCRA standards for wells), and shall be for a term not to exceed two years. No such permit shall be issued after approval or promulgation of a UIC program in the State. Any permit under this section shall contain a condition providing that it will terminate upon final action by the Director under a UIC program to issue or deny a UIC permit for the facility.

[48 FR 14228, Apr. 1, 1983; 48 FR 30114, June 30, 1983]

§ 270.65 Research, development, and demonstration permits.

(a) The Administrator may issue a research, development, and demonstration permit for any hazardous waste treatment facility which proposes to utilize an innovative and experimental hazardous waste treatment technology or process for which permit standards for such experimental activity have not been promulgated under Part 264 or 266. Any such permit shall include such terms and conditions as will assure protection of human health and the environment. Such permits:

(1) Shall provide for the construction of such facilities as necessary, and for operation of the facility for not longer than one year unless renewed as provided in paragraph (d) of this section, and

(2) Shall provide for the receipt and treatment by the facility of only those types and quantities of hazardous waste which the Administrator deems necessary for purposes of determining the efficacy and performance capabilities of the technology or process and the effects of such technology or process on human health and the environment, and

(3) Shall include such requirements as the Administrator deems necessary to protect human health and the environment (including, but not limited to, requirements regarding monitoring, operation, financial responsibility, closure, and remedial action) and such requirements as the Administrator deems necessary regarding testing and providing of information to the Administrator with respect to the operation of the facility.

(b) For the purpose of expediting review and issuance of permits under this section, the Administrator may, consistent with the protection of human health and the environment, modify or waive permit application and permit issuance requirements in Parts 124 and 270 except that there may be no modification or waiver of regulations regarding financial responsibility (including insurance) or of procedures regarding public participation.

(c) The Admin ator may order an immediate term on of all oper-

(2) The Director will review this statement and any other relevant information submitted with Part B of the permit application and specify those requirements for this period most likely to meet the performance standards of § 264.343 of this chapter based on his engineering judgment.

(d) For the purposes of determining feasibility of compliance with the performance standards of § 264.343 of this chapter and of determining adequate operating conditions under § 264.345 of this chapter, the applicant for a permit to an existing hazardous waste incinerator may prepare and submit a trial burn plan and perform a trial burn in accordance with paragraphs (b)(2) through (9) of this section. Applicants who submit trial burn plans and receive approval before submission of a permit application must complete the trial burn and submit the results, specified in paragraph (b)(6), with Part B of the permit application. If completion of this process conflicts with the date set for submission of the Part B application, the applicant must contact the Director to establish a later date for submission of the Part B application or the trial burn results. If the applicant submits a trial burn plan with Part B of the permit application, the trial burn must be conducted and the results submitted within a time period to be specified by the Director.

§ 270.63 Permits for land treatment demonstrations using field test or laboratory analyses.

(a) For the purpose of allowing an owner or operator to meet the treatment demonstration requirements of § 264.272 of this chapter, the Director may issue a treatment demonstration permit. The permit must contain only those requirements necessary to meet the standards in § 264.272(c). The permit may be issued either as a treatment or disposal permit covering only the field test or laboratory analyses, or as a two-phase facility permit covering the field tests, or laboratory analyses, and design, construction operation and maintenance of the land treatment unit.

(1) The Director may issue a two-pha facility permit if he finds that, ba on information submitted in Part B of the application, substantial, although incomplete or inconclusive, information already exists upon which to base the issuance of a facility permit.

(2) If the Director finds that not enough information exists upon which he can establish permit conditions to attempt to provide for compliance with all of the requirements of Subpart M, he must issue a treatment demonstration permit covering only the field test or laboratory analyses.

(b) If the Director finds that a phased permit may be issued, he will establish, as requirements in the first phase of the facility permit, conditions for conducting the field tests or laboratory analyses. These permit conditions will include design and operating parameters (including the duration of the tests or analyses and, in the case of field tests, the horizontal and vertical dimensions of the treatment zone), monitoring procedures, post-demonstration clean-up activities, and any other conditions which the Director finds may be necessary under § 264.272(c). The Director will include conditions in the second phase of the facility permit to attempt to meet all Subpart M requirements pertaining to unit design, construction, operation, and maintenance. The Director will establish these conditions in the second phase of the permit based upon the substantial but incomplete or inconclusive information contained in the Part B application.

(1) The first phase of the permit will be effective as provided in § 124.15(b) of this chapter.

(2) The second phase of the permit will be effective as provided in paragraph (d) of this section.

(c) When the owner or operator who has been issued a two-phase permit has completed the treatment demonstration, he must submit to the Director a certification, signed by a person authorized to sign a permit application or report under § 270.11, that the field tests or laboratory analyses have been carried out in accordance with the conditions specified in phase one of the permit for conducting such tests or analyses. The owner or operator must also submit all data colle during the field tests or laborat

analyses within 90 days of completion of those tests or analyses unless the Director approves a later date.

(d) If the Director determines that the results of the field tests or laboratory analyses meet the requirements of § 264.272 of this chapter, he will modify the second phase of the permit to incorporate any requirements necessary for operation of the facility in compliance with Part 264, Subpart M, of this chapter, based upon the results of the field tests or laboratory analyses.

(1) This permit modification may proceed as a minor modification under § 270.42, provided any such change is minor, or otherwise will proceed as a modification under § 270.41(a)(2).

(2) If no modifications of the second phase of the permit are necessary, or if only minor modifications are necessary and have been made, the Director will give notice of his final decision to the permit applicant and to each person who submitted written comments on the phased permit or who requested notice of the final decision on the second phase of the permit. The second phase of the permit then will become effective as specified in § 124.15(b).

(3) If modifications under § 270.41(a)(2) are necessary, the second phase of the permit will become effective only after those modifications have been made.

§ 270.64 Interim permits for UIC wells.

The Director may issue a permit under this part to any Class I UIC well (see § 144.6) injecting hazardous wastes within a State in which no UIC program has been approved or promulgated. Any such permit shall apply and insure compliance with all applicable requirements of 40 CFR Part 264, Subpart R (RCRA standards for wells), and shall be for a term not to exceed two years. No such permit shall be issued after approval or promulgation of a UIC program in the State. Any permit under this section shall contain a condition providing that it will terminate upon final action by the Director under a UIC program to issue or deny a UIC permit for the facility.

[48 FR 14228, Apr. 1, 1983; 48 FR 30114, June 30, 1983]

§ 270.65 Research, development, and demonstration permits.

(a) The Administrator may issue a research, development, and demonstration permit for any hazardous waste treatment facility which proposes to utilize an innovative and experimental hazardous waste treatment technology or process for which permit standards for such experimental activity have not been promulgated under Part 264 or 266. Any such permit shall include such terms and conditions as will assure protection of human health and the environment. Such permits:

(1) Shall provide for the construction of such facilities as necessary, and for operation of the facility for not longer than one year unless renewed as provided in paragraph (d) of this section, and

(2) Shall provide for the receipt and treatment by the facility of only those types and quantities of hazardous waste which the Administrator deems necessary for purposes of determining the efficacy and performance capabilities of the technology or process and the effects of such technology or process on human health and the environment, and

(3) Shall include such requirements as the Administrator deems necessary to protect human health and the environment (including, but not limited to, requirements regarding monitoring, operation, financial responsibility, closure, and remedial action), and such requirements as the Administrator deems necessary regarding testing and providing of information to the Administrator with respect to the operation of the facility.

(b) For the purpose of expediting review and issuance of permits under this section, the Administrator may, consistent with the protection of human health and the environment, modify or waive permit application and permit issuance requirements in Parts 124 and 270 except that there may be no modification or waiver of regulations regarding financial responsibility (including insurance) or of procedures regarding public participation.

(c) The Administrator may order an immediate term on of all oper-